\\tetr-file1\Users\ryan.odom\Documents\12032-A-COS Tulare CTE_ryan.odomNLB27.rvt

TULARE CAMPUS CTE
COLLEGE OF THE SEQUOIAS

APPLICATION NO: 02-120265

FILE NO: 54-C2

OWNER
SEQUOIAS COMMUNITY COLLEGE DISTRICT

915 S. MOONEY BLVD.
VISALIA, CA 93277
(559) 730-3908

CONTACT: BYRON WOODS

EMAIL: byronw@cos.edu

PROJECT ARCHITECT
TETER, LLP

7535 N. PALM AVE., SUITE 201
FRESNO, CA 93711
(559) 437-0887

CONTACT: JON COULTER

E-MAIL: jon.coulter@teterae.com

STRUCTURAL ENGINEER
TETER, LLP

7535 N. PALM AVE., SUITE 201
FRESNO, CA 93711
(559) 437-0887

CONTACT: ERIC BAILEY

E-MAIL: eric.bailey@teterae.com

MECHANICAL/PLUMBING ENGINEER
TETER, LLP

7535 N. PALM AVE., SUITE 201
FRESNO, CA 93711
(559) 437-0887

CONTACT: STEVEN JONES

E-MAIL: steven.jones@teterae.com

ELECTRICAL ENGINEER
TETER, LLP

7535 N. PALM AVE., SUITE 201
FRESNO, CA 93711
(559) 437-0887

CONTACT: COREY STONE

E-MAIL: corey.stone@teterae.com

CIVIL ENGINEER
BLAIR, CHURCH & FLYNN

451 CLOVIS AVENUE, SUITE 200
CLOVIS, CA 93612
(559)326-1400

CONTACT: LANE BADER

EMAIL: Lbader@bcf-engr.com

LANDSCAPE ARCHITECT
BLAIR, CHURCH & FLYNN

451 CLOVIS AVENUE, SUITE 200
CLOVIS, CA 93612
(559)326-1400

CONTACT: DAVE BRILEY

EMAIL: dbriley@bcf-engr.com

PROJECT DIRECTORY

GENERAL NOTES

1. A COPY TITLE 24 C.C.R. PARTS 1 AND 2 SHALL BE KEPT ON THE JOB SITE AT ALL TIMES.
2. CHANGES TO THE STRUCTURAL, ACCESSIBILITY OR FIRE AND LIFE-SAFETY PORTIONS OF THE APPROVED PLANS AND SPECIFICATIONS AFTER THE WORK HAS BEEN LET SHALL BE MADE BY A CONSTRUCTION CHANGE DOCUMENT (CCD) AS REQUIRED IN SECTION 4-338, PART I, CAC, AND SHALL BE SUBMITTED TO, AND APPROVED BY DSA PRIOR TO COMMENCEMENT OF THE WORK. CONSTRUCTION CHANGE DOCUMENTS SHALL BE PREPARED AND SUBMITTED TO DSA IN COMPLIANCE WITH DSA INTERPRETATION OF REGULATION IR A-6.
3. ALL TESTS TO CONFORM TO THE REQUIREMENTS OF TITLE 24 SECTION 4-335, PART 1, AND APPROVED T & I SHEET.
4. TESTS OF MATERIALS AND TESTING LABORATORY SHALL BE IN ACCORDANCE WITH TITLE 24 SECTION 4-335, PART I, AND THE DISTRICT SHALL EMPLOY AND PAY THE LABORATORY. COSTS OF RETEST MAY BE BACK CHARGED TO THE CONTRACTOR.
5. DSA SHALL BE NOTIFIED AT THE START OF CONSTRUCTION AND PRIOR TO THE PLACEMENT OF THE CONCRETE PER TITLE 24 SECTION 4-331, PART I.
6. A CLASS 1 INSPECTOR REQUIRED FOR THIS PROJECT SHALL BE EMPLOYED BY OWNER AND APPROVED BY ARCHITECT, STRUCTURAL ENGINEER, AND DSA. INSPECTOR SHALL BE IN ACCORDANCE WITH SECTION 4-333(c). THE DUTY OF THE INSPECTOR SHALL BE IN ACCORDANCE WITH TITLE 24 SECTION 4-342, PART I.
7. SUPERVISION OF CONSTRUCTION BY DSA SHALL BE IN ACCORDANCE WITH TITLE 24 SECTION 4-334, PART 1.
8. CONTRACTOR, INSPECTOR, ARCHITECT, AND ENGINEERS SHALL SUBMIT VERIFIED REPORTS (FORM SSS-6) IN ACCORDANCE WITH TITLE 24 SECTION 4-336, PART I.
9. THE ARCHITECT AND THE STRUCTURAL ENGINEER SHALL PERFORM THEIR DUTIES IN ACCORDANCE WITH TITLE 24 SECTION 4-333(a) AND 4-341, PART I.
10. THE CONTRACTOR SHALL PERFORM HIS DUTIES IN ACCORDANCE WITH TITLE 24 SECTION 4-343, PART I.
11. THE INTENT OF THE DRAWINGS AND SPECIFICATIONS IS TO CONSTRUCT THE SCHOOL BUILDING IN ACCORDANCE WITH TITLE 24 C.C.R. SHOULD ANY CONDITIONS DEVELOP NOT COVERED BY THE CONTRACT DOCUMENTS WHEREIN THE FINISHED WORK WILL NOT COMPLY WITH SAID TITLE 24, C.C.R., A CHANGE ORDER DETAILING AND SPECIFYING THE REQUIRED WORK SHALL BE SUBMITTED TO AND APPROVED BY DSA BEFORE PROCEEDING WITH THE WORK.
12. SUBSTITUTIONS AND REQUESTS FOR INFORMATION AFFECTING STRUCTURAL SAFETY, FIRE AND LIFE SAFETY OR ACCESS COMPLIANCE SHALL BE APPROVED BY DSA PRIOR TO FABRICATION OR USE.
13. ADDENDA MUST BE SIGNED BY ARCHITECT AND APPROVED BY DSA.
14. NO CHANGES OR REVISIONS SHALL BE MADE FOLLOWING WRITTEN APPROVAL WHICH AFFECTS ACCESS COMPLIANCE ITEMS UNLESS SUCH CHANGES OR REVISIONS ARE SUBMITTED TO THE DSA FOR APPROVAL.
15. SUBSTITUTIONS AFFECTING DSA REGULATED ITEMS SHALL BE SUBMITTED AS A CONSTRUCTION CHANGE DOCUMENT OR ADDENDA, AND SHALL BE APPROVED BY DSA PRIOR TO FABRICATION AND INSTALLATION.
16. CONSTRUCTION CHANGE DOCUMENTS MUST BE SIGNED BY THE FOLLOWING:
    - ARCHITECT OR ENGINEER OF RECORD
    - STRUCTURAL ENGINEER (WHEN APPLICABLE)
    - DELEGATED PROFESSIONAL ENGINEER
17. MATERIALS AND THEIR INSTALLATION SHALL COMPLY WITH APPLICABLE CODES, STANDARDS AND MANUFACTURER'S RECOMMENDATIONS.
18. THESE PLANS AND SPECIFICATIONS WILL COMPLY WITH CFC CHAPTER 33 FIRE SAFETY DURING CONSTRUCTION AND DEMOLITION.
19. GRADING PLANS, DRAINAGE IMPROVEMENTS, ROAD AND ACCESS REQUIREMENTS AND ENVIRONMENTAL HEALTH CONSIDERATIONS SHALL COMPLY WITH ALL LOCAL ORDINANCES.
20. DSA IS NOT SUBJECT TO ARBITRATION.

SEE ADDITIONAL GENERAL NOTES ON SHEET G001

GENERAL

PROJECT ADDRESS: 4999 E. BARDSLEY AVE, TULARE, CA 93274
ASSESSORS PARCEL NO.: 184-080-006
GOVERNING AGENCY: DIVISION OF THE STATE ARCHITECT (DSA)

PLUMBING FIXTURE CALCULATION

GROUP 'F-1 AND B' OCCUPANCY: (2019 CPC, TABLE A OCCUPANT LOAD FACTORS):

GROUP F (WORKSHOPS): 27,475 SF/2000 SF/OCC =		14 OCC
GROUP B (ADMIN/OFF): 1,420 SF/ 200 SF/OCC =		18 OCC
GROUP B (EXHIBITS/CONF.) 528 SF/ 30 SF/OCC =		18 OCC
GROUP B (COLLEGE ED.) 3,835 SF/ 50SF/OCC =		77 OCC
TOTAL OCCUPANT LOAD	=	117 OCC

117 OCC/2 =59 MEN, 59 WOMEN

FIXTURE COUNT REQ'D (2019 CPC, TABLE 422.1, MINIMUM PLUMBING FACILITIES):

MENS:	2 WATER CLOSET
	1 URINAL
	2 LAVATORY
WOMENS:	4 WATER CLOSET
	2 LAVATORY

TOTAL FIXTURE COUNT PROVIDED:

MENS:	2 WATER CLOSET
	2 URINAL
	2 LAVATORY
WOMENS:	4 WATER CLOSET
	2 LAVATORY
GENDER NUETRAL:	3 WATER CLOSET
	3 URINALS
	3 LAVATORY

NOTE: HIGHEST COUNT USED FROM B & F-1 OCCUPANCY GROUPS ACCESSORY AREAS HAVE BEEN EXCLUDED FROM BUILDING AREAS PER TABLE "A" FOOTNOTES

GOVERNING CODES

2022 CALIFORNIA ADMINISTRATIVE CODE (CAC), C.C.R. TITLE 24, PART 1
2019 CALIFORNIA BUILDING CODE (CBC), C.C.R. TITLE 24, PART 2
2019 CALIFORNIA ELECTRICAL CODE (CEC), C.C.R. TITLE 24, PART 3
2019 CALIFORNIA MECHANICAL CODE (CMC), C.C.R. TITLE 24, PART 4
2019 CALIFORNIA PLUMBING CODE (CPC), C.C.R. TITLE 24, PART 5
2019 CALIFORNIA FIRE CODE (CFC), C.C.R. TITLE 24, PART 9
2019 CALIFORNIA REFERENCED STANDARDS CODE, C.C.R. TITLE 24, PART 12
2019 CALIFORNIA ENERGY CODE (CAC), C.C.R. TITLE 24, PART 6
2019 CALIFORNIA GREEN BUILDING STANDARDS CODE (CALGREEN), C.C.R. TITLE 24, PART 11
C.C.R., TITLE 19 PUBLIC SAFETY
NFPA 13-16 STANDARD FOR THE INSTALLATION OF SPRINKLER SYSTEMS (AS AMENDED)
NFPA 20-16 STANDARD FOR THE INSTALLATION OF STATIONARY PUMP FOR FIRE PROTECTION
NFPA 24-16 INSTALLATION OF PRIVATE FIRE SERVICE MAINS AND THEIR APPURTENANCES (AS AMENDED)
NFPA 25-13CA (CALIFORNIA NFPA 25 EDITION) INSPECTION, TESTING, AND MAINTENANCE OF WATER-BASED FIRE PROTECTION SYSTEMS
NFPA 72-16 NATIONAL FIRE ALARM AND SIGNALING CODE (AS AMENDED)
UL 38-99 MANUALLY ACTUATED SIGNALING BOXES (AS AMENDED)
UL 268-09 SMOKE DETECTORS FOR FIRE ALARM SYSTEMS
UL 268A-09 SMOKE DETECTORS FOR DUCT APPLICATION (AS AMENDED)
UL 464-03 AUDIBLE SIGNAL APPLIANCES (AS AMENDED)
UL 521-99 HEAT DETECTORS FOR FIRE PROTECTIVE SIGNALING SYSTEMS (AS AMENDED)
UL 1424 CABLES FOR POWER-LIMITED FIRE-ALARM CIRCUITS (2005 EDITION)
UL 1971 SIGNALING DEVICES FOR THE HEARING IMPAIRED (2004 EDITION)
AMERICANS WITH DISABILITIES ACT

PROJECT INFORMATION

PROJECT DESCRIPTION

THIS PROJECT CONSISTS OF A NEW COMMUNITY COLLEGE CAREER TECHNICAL EDUCATION CLASSROOM AND LAB CENTER INCLUDING 3 NEW STEEL FRAMED CLASSROOM BUILDINGS (D, E AND F), A FIRE PUMP HOUSE, AND A LARGE TRAINING YARD WITH (3) DSA PC SHELTERS.

DEFERRED APPROVALS

INSTALLATION OF DEFERRED APPROVAL ITEMS SHALL NOT BE STARTED UNTIL CONTRACTORS DRAWINGS, SPECS. AND ENGINEERING CALCULATIONS FOR THE ACTUAL SYSTEMS TO BE INSTALLED HAVE BEEN ACCEPTED AND SIGNED BY THE ARCHITECT OR STRUCTURAL ENGINEER, AND APPROVED BY THE DIVISION OF THE STATE ARCHITECT.

1. ALUMINUM-FRAMED ENTRANCES AND CURTAIN WALL SYSTEMS.

STATEMENT OF GENERAL CONFORMANCE

FOR ARCHITECTS/ENGINEERS WHO UTILIZE PLANS, INCLUDING BUT NOT LIMITED TO SHOP DRAWINGS, PREPARED BY OTHER LICENSED DESIGN PROFESSIONALS AND/OR CONSULTANTS.

APPLICATION NO:. 02-120265 FILE NO:. 54-C2

THE DRAWINGS OR SHEETS LISTED ON THE COVER OR INDEX SHEET

HAVE BEEN PREPARED BY OTHER DESIGN PROFESSIONALS OR CONSULTANTS WHO ARE LICENSED AND/OR AUTHORIZED TO PREPARE SUCH DRAWINGS IN THIS STATE. IT HAS BEEN EXAMINED BY ME FOR:

1. DESIGN INTENT AND APPEARS TO MEET THE APPROPRIATE REQUIREMENTS OF TITLE 24, CALIFORNIA CODE OF REGULATIONS AND THE PROJECT SPECIFICATIONS PREPARED BY ME, AND
2. COORDINATION WITH MY PLANS AND SPECIFICATIONS AND IS ACCEPTABLE FOR INCORPORATION INTO THE CONSTRUCTION OF THIS PROJECT.

THE STATEMENT OF GENERAL CONFORMANCE "SHALL NOT BE CONSTRUED AS RELIEVING ME OF MY RIGHTS, DUTIES, AND RESPONSIBILITIES UNDER SECTIONS 17302 AND 81138 OF THE EDUCATION CODE AND SECTIONS 4-336, 4-341, AND 4-344" OF TITLE 24, PART I.

I CERTIFY THAT:

☒ ALL DRAWINGS OR SHEETS LISTED ON THE COVER OR INDEX
☐ THIS DRAWING OR PAGE

IS/ARE IN GENERAL CONFORMANCE AND HAVE BEEN COORDINATED WITH THE PROJECT PLANS AND SPECIFICATIONS

11-01-2022

ARCHITECT'S SIGNATURE — DATE
JONATHAN COULTER
SENIOR ARCHITECT
TETER, LLP

C31993 — 03-31-23

LICENSE NUMBER — EXPIRATION DATE

ARCHITECT'S STATEMENT

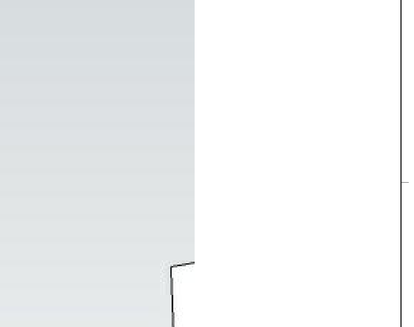

VICINITY MAP N.T.S.

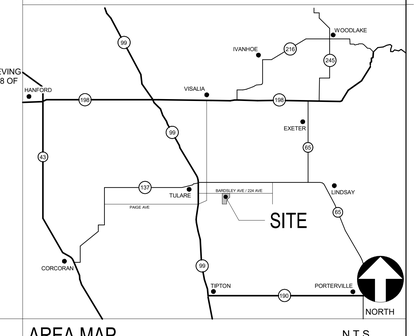

AREA MAP N.T.S.

FOR BID ONLY

Teter, LLP expressly reserves its common law copyright and other property rights in these plans. This document, the ideas and designs incorporated herein, as an instrument of professional service, is not to be used in whole or part, for any other project without prior written authorization.

MARK	DATE	DESCRIPTION
	11/1/2022	DSA RESUBMITTAL

TETER, LLP
FRESNO HEADQUARTERS
VISALIA | BAKERSFIELD | MODESTO | SAN LUIS OBISPO
ARCHITECTS ENGINEERS CONNECTED

TULARE CAMPUS CTE
COLLEGE OF THE SEQUOIAS
4999 E. BARDSLEY AVE.
TULARE, CA

DRAWING TITLE
COVER

PROJECT NO.
21-12032

DRAWING
G000

PLOT DATE: 11/1/2022 9:41:42 PM

\\tetr-file1\Users\ryan.odom\Documents\12032-A-COS Tulare CTE_ryan.odomNLB27.rvt

THE CALIFORNIA ENERGY CODE SECTION 10-103 REQUIRES ACCEPTANCE TESTING ON ALL NEWLY INSTALLED LIGHTING CONTROLS, MECHANICAL SYSTEMS, ENVELOPES, AND PROCESS EQUIPMENT AFTER INSTALLATION AND BEFORE PROJECT COMPLETION. AN ACCEPTANCE TEST IS A FUNCTIONAL PERFORMANCE TEST TO HELP ENSURE THAT NEWLY INSTALLED EQUIPMENT IS OPERATING AND IN COMPLIANCE WITH THE ENERGY CODE.

LIGHTING CONTROLS ACCEPTANCE TESTS MUST BE PERFORMED BY A CERTIFIED LIGHTING CONTROLS ACCEPTANCE TEST TECHNICIAN (ATT).

MECHANICAL SYSTEM ACCEPTANCE TEST MUST BE PERFORMED BY A CETIFIED MECHANICAL ATT FOR PROJECTS SUBMITTED ON OR AFTER OCTOBER 1, 2021.

ENVELOPE AND PROCESS EQUIPMENT ACCEPTANCE TESTS SHALL BE PERFORMED BY THE INSTALLING CONTRACTOR, ENGINEER/ARCHITECT OF RECORD, OR THE OWNER'S AGENT.

A LISTING OF CERTIFIED ATT CAN BE FOUND AT https://www.energy.ca.gov/programs-and-topics/programs/acceptance-test-technician-certification-provider-program/acceptance

THE ACCEPTANCE TESTING PROCEDURES MUST BE REPEATED, AND DEFICIENCIES MUST BE CORRECTED BY THE BUILDER OR INSTALLING CONTRACTOR UNTIL THE CONSTRUCTION/INSTALLATION OF THE SPECIFIED SYSTEMS CONFORM AND PASS THE REQUIRED ACCETANCE CRITERIA.

PROJECT INSPECTORS WILL COLLECT THE FORMS TO CONFIRM THAT THE REQUIRED ACCEPTANCE TESTS HAVE BEEN COMPLETED.

GENERAL	
G000	COVER
G001	SHEET INDEX / CAL GREEN
G100	OVERALL SITE PLAN
G200	BUILDING CODE ANALYSIS BUILDING D & FIRE PUMP HOUSE
G210	BUILDING CODE ANALYSIS BUILDING E
G220	BUILDING CODE ANALYSIS BUILDING F
6	
CIVIL	
C100	TOPOGRAPHIC SURVEY LEGEND AND NOTES
C101	PARTIAL TOPOGRAPHICAL SURVEY
C102	PARTIAL TOPOGRAPHICAL SURVEY
C201	PARTIAL DEMOLITION PLAN
C202	PARTIAL DEMOLITION PLAN
C301	PARTIAL SITE PLAN
C302	PARTIAL SITE PLAN
C401	PARTIAL HORIZONTAL CONTROL PLAN
C402	PARTIAL HORIZONTAL CONTROL PLAN
C403	HORIZONTAL CONTROL PLAN TABLE
C501	PARTIAL GRADING AND DRAINAGE PLAN
C502	PARTIAL GRADING AND DRAINAGE PLAN
C601	PARTIAL UTILITY PLAN
C602	PARTIAL UTILITY PLAN
X101	DETAILS
X102	DETAILS
X103	DETAILS
17	
LANDSCAPE	
L101	IRRIGATION PLAN
L102	IRRIGATION PLAN
L103	IRRIGATION DETAILS
L104	IRRIGATION DETAILS
L201	PLANTING PLAN
L202	PLANTING PLAN
L203	PLANTING PLAN
L204	PLANTING DETAILS
8	
ARCHITECTURAL	
A000	LEGENDS AND ABBREVIATIONS
A100F	FIRE AUTHORITY SITE PLAN
A101	ENLARGED DEMOLITION SITE PLAN
A102	ENLARGED PROPOSED SITE PLAN
A105	SITE DETAILS
A110	ENLARGED SITE PLAN 'A'
A120	ENLARGED SITE PLAN 'B'
A121	SITE DETAILS - COLONNADE
A122	SITE DETAILS - DECORATIVE FENCING
A130	ENLARGED SITE PLAN 'C'
A140	ENLARGED SITE PLAN 'D'
A150	ENLARGED SITE PLAN 'E'
A151	SITE DETAILS - ENTRY GATE
A152	SITE DETAILS - ENTRY GATE
A153	SITE DETAILS - CANOPY
A160	ENLARGED SITE PLAN 'F'
A170	ENLARGED SITE PLAN 'G'
A171	SITE DETAILS - ENCLOSURES
A200	FLOOR PLAN - BUILDING D
A201	WALL / CURB TYPE PLAN, ITEMS IN SLAB - BUILDING D
A210	FLOOR PLAN - BUILDING E
A211	WALL / CURB TYPE PLAN, ITEMS IN SLAB - BUILDING E
A220	FLOOR PLAN - BUILDING F
A221	WALL AND CURB TYPE PLAN - BUILDING F
A222	BUILDING F MECHANICAL PLATFORM PLAN
A223	WALL TYPE PLAN - BUILDING F EQUIPMENT PLATFORM
A224	ENLARGED FLOOR PLANS
A300	EXTERIOR ELEVATIONS
A310	EXTERIOR ELEVATIONS
A320	EXTERIOR ELEVATIONS
A321	EXTERIOR ELEVATIONS
A400	BUILDING SECTIONS - BUILDING D
A410	BUILDING SECTIONS - BUILDING E
A420	BUILDING SECTIONS - BUILDING F
A421	BUILDING SECTIONS - BUILDING F
A430	WALL SECTIONS
A431	WALL SECTIONS
A432	WALL SECTIONS
A433	WALL SECTIONS
A434	WALL SECTIONS
A500	ROOF PLAN
A510	ROOF PLAN
A520	ROOF PLAN
A600	REFLECTED CEILING PLAN
A610	REFLECTED CEILING PLAN
A620	REFLECTED CEILING PLAN
A700	DOOR SCHEDULE
A701	WINDOW SCHEDULE
A710	FINISH SCHEDULE
A800	TYPICAL SIGNAGE DETAILS
A801	TYPICAL ACCESSIBILITY AND CLEARANCES
A805	DETAILS
A806	FIRE RATED DETAILS
A810	EXTERIOR OPENING DETAILS
A811	EXTERIOR OPENING DETAILS
A812	INTERIOR OPENING DETAILS
A813	EQUIPMENT PLATFORM DOORS AND OVERHEAD COILING DOORS
A815	BI-FOLD DOOR AND CANOPY/GUTTER DETAILS
A820	PILASTER DETAILS
A821	PILASTER DETAILS
A822	WALL TYPES
A823	CURB TYPES
A824	DETAILS
A825	DETAILS
A826	DETAILS
A827	TYPICAL DETAILS
A830	ROOFING DETAILS
A831	ROOF DETAILS - MECHANICAL SCREEN
A840	TYPICAL CEILING DETAILS
A841	TYPICAL SUSPENDED CEILING DETAILS
A842	SUSPENDED FREE FLOATING CEILING DETAILS
A850	TYPICAL INTERIOR DETAILS
A851	CORD/HOSE REEL DETAILS
A900	INTERIOR ELEVATIONS
A901	INTERIOR ELEVATIONS
A902	INTERIOR ELEVATIONS
A903	INTERIOR ELEVATIONS
A910	INTERIOR ELEVATIONS
A911	INTERIOR ELEVATIONS
A912	INTERIOR ELEVATIONS
A920	INTERIOR ELEVATIONS
A921	INTERIOR ELEVATIONS
A922	INTERIOR ELEVATIONS
A923	INTERIOR ELEVATIONS
A924	INTERIOR ELEVATIONS
A925	INTERIOR ELEVATIONS
A926	INTERIOR ELEVATIONS
87	

STRUCTURAL	
S000	GENERAL NOTES
S001	GENERAL NOTES
S002	TYPICAL DETAILS - FOUNDATION
S003	TYPICAL DETAILS - FOUNDATION
S004	TYPICAL DETAILS - MASONRY
S005	TYPICAL DETAILS - STEEL
S006	TYPICAL DETAILS - STEEL
S007	TYPICAL DETAILS - MOMENT FRAME
S008	TYPICAL DETAILS - METAL DECK
S009	TYPICAL DETAILS - METAL DECK
S010	TYPICAL DETAILS - METAL STUD
S011	TYPICAL DETAILS - METAL STUD
S012	TYPICAL DETAILS - METAL STUD
S100	FOUNDATION PLAN - BUILDING D
S101	SLAB EDGE PLAN - BUILDING D
S110	FOUNDATION PLAN - BUILDING E
S111	SLAB EDGE PLAN - BUILDING E
S120	FOUNDATION PLAN - BUILDING F
S121	SLAB EDGE PLAN - BUILDING F
S200	PLATFORM FRAMING PLAN - BUILDING D
S210	PLATFORM FRAMING PLAN - BUILDING E
S220	PLATFORM FRAMING PLAN - BUILDING F
S300	ROOF FRAMING PLAN - BUILDING D
S301	ROOF UPLIFT PRESSURE MAP - BUILDING D
S310	ROOF FRAMING PLAN - BUILDING E
S311	ROOF UPLIFT PRESSURE MAP - BUILDING E
S320	ROOF FRAMING PLAN - BUILDING F
S321	ROOF UPLIFT PRESSURE MAP - BUILDING F
S400	MOMENT FRAME ELEVATIONS
S401	WALL FRAMING ELEVATIONS
S410	MOMENT FRAME ELEVATIONS
S411	WALL FRAMING ELEVATIONS
S420	MOMENT FRAME ELEVATIONS
S421	WALL FRAMING ELEVATIONS
S422	WALL FRAMING ELEVATIONS
S500	FOUNDATION DETAILS
S501	FOUNDATION DETAILS
S502	FOUNDATION DETAILS
S600	FRAMING DETAILS
S700	ROOF FRAMING DETAILS
S701	ROOF FRAMING DETAILS
S702	ROOF FRAMING DETAILS
S703	ROOF FRAMING DETAILS
S800	MISCELLANEOUS FRAMING & DETAILS
S801	MISCELLANEOUS FRAMING & DETAILS
S802	MISCELLANEOUS FRAMING & DETAILS
S803	MISCELLANEOUS FRAMING & DETAILS
S804	MISCELLANEOUS FRAMING & DETAILS
S805	MISCELLANEOUS FRAMING & DETAILS
S806	MISCELLANEOUS FRAMING & DETAILS
S807	MISCELLANEOUS FRAMING & DETAILS
S808	MISCELLANEOUS FRAMING & DETAILS
S809	MISCELLANEOUS FRAMING & DETAILS
53	
PLUMBING	
P001	PLUMBING LEGENDS AND NOTES
P002	PLUMBING SCHEDULES
P100	PLUMBING SITE PLAN
P200	PLUMBING PLAN - BUILDING D
P201	PLUMBING PLATFORM PLAN - BUILDING D
P210	PLUMBING PLAN - BUILDING E
P211	PLUMBING PLATFORM PLAN - BUILDING E
P220	PLUMBING PLAN - BUILDING F
P221	PLUMBING PLATFORM PLANS – BUILDING F
P300	ENLARGED PLUMBING PLAN - BUILDING D
P320	ENLARGED PLUMBING FLOOR PLAN - BUILDING F
P321	ENLARGED PLUMBING FLOOR PLAN - BUILDING E & F
P322	ENLARGED PLUMBING FLOOR PLAN - BUILDING F
P500	PLUMBING ROOF PLAN - BUILDING D
P510	PLUMBING ROOF PLAN - BUILDING E
P520	PLUMBING ROOF PLAN - BUILDING F
P800	PLUMBING DETAILS
P801	ENLARGED PLUMBING SITE PLAN AND DETAILS
18	
MECHANICAL	
M001	MECHANICAL SCHEDULES, LEGENDS, AND NOTES
M002	MECHANICAL SCHEDULES
M003	MECHANICAL SCHEDULES
M004	MECHANICAL SCHEDULES
M100	MECHANICAL SITE PLAN
M200	MECHANICAL FLOOR PLAN - BUILDING D
M201	MECHANICAL PLATFORM PLAN - BUILDING D
M210	MECHANICAL FLOOR PLAN - BUILDING E
M211	MECHANICAL PLATFORM PLAN – BULDING E
M220	MECHANICAL FLOOR PLAN - BUILDING F
M221	MECHANICAL PLATFORM PLANS – BULDING F
M500	MECHANICAL ROOF PLAN - BUILDING D
M510	MECHANICAL ROOF PLAN - BUILDING E
M520	MECHANICAL ROOF PLAN - BUILDING F
M700	EMS SEQUENCE OF OPERATIONS
M800	MECHANICAL DETAILS
M801	MECHANICAL DETAILS
M900	TITLE 24 DOCUMENTATION
M901	TITLE 24 DOCUMENTATION
M902	TITLE 24 DOCUMENTATION
M903	TITLE 24 DOCUMENTATION
21	

ELECTRICAL	
E100	OVERALL ELECTRICAL SITE PLAN
E101	ENLARGED ELECTRICAL SITE PLAN - POWER & LIGHTING
E102	ENLARGED ELECTRICAL SITE PLAN - SIGNAL & FIRE ALARM
E103	ENLARGED ELECTRICAL SITE PLAN - CENTRAL PLANT
E104	ENLARGED ELECTRICAL SITE PLANS
E200	POWER PLAN - BUILDING 'D'
E201	ROOF POWER PLAN - BUILDING 'D'
E210	POWER PLAN - BUILDING 'E'
E211	ROOF POWER PLAN - BUILDING 'E'
E220	POWER PLAN - BUILDING 'F'
E221	ROOF POWER PLAN - BUILDING 'F'
E222	POWER PLANS - BUILDING 'F' ENLARGEMENTS
E300	LIGHTING PLAN - BUILDING 'D'
E301	LIGHTING CONTROL PLAN - BUILDING 'D'
E310	LIGHTING PLAN - BUILDING 'E'
E311	LIGHTING CONTROL PLAN - BUILDING 'E'
E320	LIGHTING PLAN - BUILDING 'F'
E321	LIGHTING CONTROL PLAN - BUILDING 'F'
E322	LIGHTING PLAN - BUILDING 'F' MECHANICAL PLATFORMS
E400	SIGNAL PLAN - BUILDING 'D'
E410	SIGNAL PLAN - BUILDING 'E'
E420	SIGNAL PLAN - BUILDING 'F'
E500	FIRE ALARM PLAN - BUILDING 'D'
E510	FIRE ALARM PLAN - BUILDING 'E'
E520	FIRE ALARM PLAN - BUILDING 'F'
E600	ELECTRICAL DETAILS - POWER
E601	ELECTRICAL DETAILS - LIGHTING
E602	ELECTRICAL DETAILS - SIGNAL
E700	SINGLE LINE DIAGRAM
E710	FIRE ALARM RISER DIAGRAM & NOTES
E711	BATTERY AND VOLTAGE DROP CALCULATIONS
E712	BATTERY AND VOLTAGE DROP CALCULATIONS
E800	ELECTRICAL SCHEDULES, LEGENDS, AND NOTES
E801	EQUIPMENT AND FEEDER SCHEDULE
E810	PANEL SCHEDULES
E811	PANEL SCHEDULES
E812	PANEL SCHEDULES
E813	PANEL SCHEDULES
E900	CA ENERGY CODE COMPLIANCE FORMS
39	
FIRE PROTECTION	
FP001	FIRE PROTECTION - GENERAL INFORMATION
FP002	FIRE PROTECTION - SITE PLAN
FP100	FIRE PROTECTION - BUILDING D PIPING PLAN NORTH
FP101	FIRE PROTECTION - BUILDING D PIPING PLAN SOUTH
FP107	FIRE PROTECTION - FIRE PUMP HOUSE LAYOUT
FP110	FIRE PROTECTION - BUIDLING E PIPING PLAN
FP120	FIRE PROTECTION - BUILDING F PIPING PLAN WEST
FP121	FIRE PROTECTION - BUILDING F PIPING PLAN EAST
FP200	FIRE PROTECTION - BUILDING D REFLECTED CEILING PLAN NORTH
FP201	FIRE PROTECTION - BUILDING D REFLECTED CEILING PLAN SOUTH
FP210	FIRE PROTECTION - BUILDING E REFLECTED CEILING PLAN
FP220	FIRE PROTECTION - BUILDING F REFLECTED CEILING PLAN WEST
FP221	FIRE PROTECTION - BUILDING F REFLECTED CEILING PLAN EAST
FP400	FIRE PROTECTION - BUIDLING D SECTIONS
FP410	FIRE PROTECTION - BUILDING E SECTIONS
FP420	FIRE PROTECTION - BUILDING F SECTIONS
FP501	FIRE PROTECTION - DETAILS
17	
FIRE PUMP HOUSE	
A-0.0	COVER SHEET - FIRE PUMP HOUSE
A-0.1	GENERAL NOTES - FIRE PUMP HOUSE
A-1.1	FLOOR PLAN, ROOF PLAN & ARCHITECTURAL DETAILS - FIRE PUMP HOUSE
A-2.1	EXTERIOR ELEVATIONS, BUILDING SECTIONS & ARCHITECTURAL DETAILS - FIRE PUMP HOUSE
A-3.1	CONNECTION DETAILS - FIRE PUMP HOUSE
A-3.2	CONNECTION DETAILS - FIRE PUMP HOUSE
A-4.1	POSTE-TENSIONING INSTRUCTION - FIRE PUMP HOUSE
A-5.1	SITE PREPARATION, BUILDING SHIPPING & HANDLING - FIRE PUMP HOUSE
8	
FABRIC SHADE STRUCTURE (DSA P.C. 04-119454)	
P.C. T-1.0	P.C. TITLE SHEET
P.C. T-2.0	DSA 103 SAMPLE FORM
P.C. T-2.1	DSA 103 SAMPLE FORM
26.1-1000	PRODUCT INFORMATION
26.1-2000	REACTIONS
5	
SINGLE POST WALKWAY COVER (DSA P.C. 02-118169) - 2 BUILDINGS	
S1	FOUNDATION PLAN, GENERAL NOTES, DETAILS
S2	ROOF FRAMING PLANS
S3	SECTION, TYPICAL ELEVATION, DETAILS
S4	SECTION, TYPICAL ELEVATION, DETAILS
4	
TOTAL PAGES: 283	

FOR BID ONLY

Teter, LLP expressly reserves its common law copyright and other property rights in these plans. This document, the ideas and designs incorporated herein, as an instrument of professional service, is not to be used in whole or in part, for any other project without prior written authorization.

MARK	DATE	DESCRIPTION
	11/1/2022	DSA RESUBMITTAL

LICENSED ARCHITECT JOHN LUKE COULTER C-26 STATE OF CALIFORNIA

TETER, LLP
FRESNO HEADQUARTERS
VISALIA | BAKERSFIELD | MODESTO | SAN LUIS OBISPO
ARCHITECTS ENGINEERS CONNECTED

TULARE CAMPUS CTE
COLLEGE OF THE SEQUOIAS
4999 E. BARDSLEY AVE.
TULARE, CA

DRAWING TITLE
SHEET INDEX / CAL GREEN

PROJECT NO.
21-12032

DRAWING
G001

PLOT DATE: 11/1/2022 9:41:43 PM

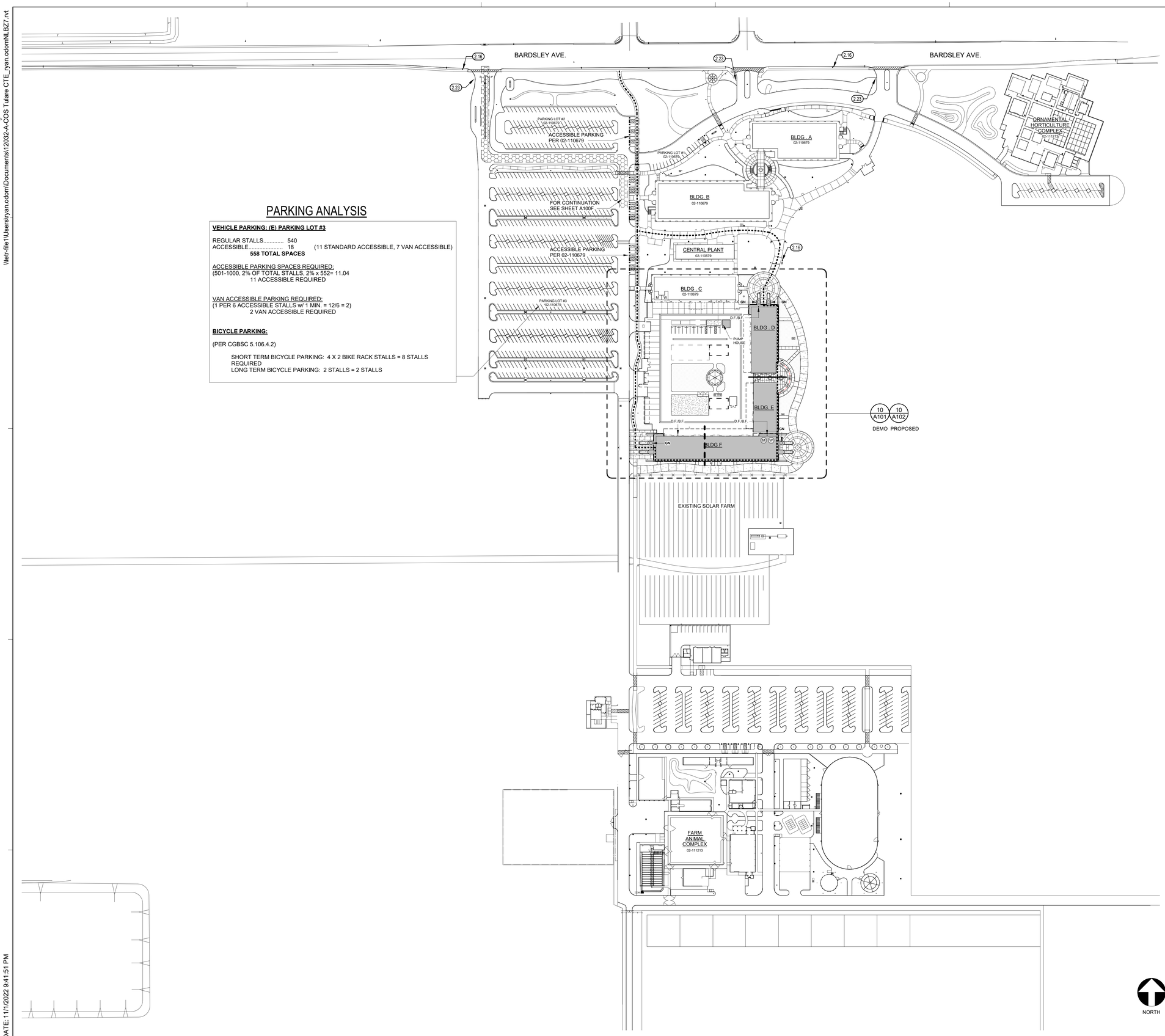

PARKING ANALYSIS

VEHICLE PARKING: (E) PARKING LOT #3

REGULAR STALLS..... 540
ACCESSIBLE..... 18 (11 STANDARD ACCESSIBLE, 7 VAN ACCESSIBLE)
558 TOTAL SPACES

ACCESSIBLE PARKING SPACES REQUIRED:
(501-1000, 2% OF TOTAL STALLS, 2% x 552= 11.04
11 ACCESSIBLE REQUIRED

VAN ACCESSIBLE PARKING REQUIRED:
(1 PER 6 ACCESSIBLE STALLS w/ 1 MIN. = 12/6 = 2)
2 VAN ACCESSIBLE REQUIRED

BICYCLE PARKING:

(PER CGBSC 5.106.4.2)

SHORT TERM BICYCLE PARKING: 4 X 2 BIKE RACK STALLS = 8 STALLS REQUIRED
LONG TERM BICYCLE PARKING: 2 STALLS = 2 STALLS

KEYNOTES

2.16 EXISTING FIRE HYDRANT
2.23 EXISTING PARKING LOT ENTRANCE SIGN, PER DSA #02-110679

LEGEND

- EXISTING BUILDING NOT INCLUDED IN SCOPE OF WORK
- PROPOSED BUILDINGS IN THIS APPLICATION
- FIRE ACCESS LANE W/ UNOBSTRUCTED WIDTH OF 20'-0" MIN. AND AN UNOBSTRUCTED VERTICAL CLEARANCE OF 13'-6" MIN.
- ASPHALT PAVING - SEE CIVIL DRAWINGS
- TURF AREA, SEE LANDSCAPE DRAWINGS
- CONCRETE PAVING PER CIVIL, SEE A141 AND 142 FOR CONCRETE FINISH AND LAYOUT INFORMATION
- W M GN — ACCESSIBLE WOMEN'S/MEN'S/GENDER NEUTRAL RESTROOMS
- D.F./B.F. — ACCESSIBLE DRINKING FOUNTAIN/BOTTLE FILLER
- LS — LANDSCAPE AREA, SEE LANDSCAPE.
- LIGHT POLE, SEE ELECTRICAL.
- PATHWAY LIGHT BOLLARD, SEE ELECTRICAL.
- F.H. — FIRE HYDRANT, SEE CIVIL.
- F.D.C — FIRE DEPARTMENT CONNECTION, SEE CIVIL.
- P.I.V — POST INDICATOR VALVE, SEE CIVIL.
- ASSUMED PROPERTY LINE
- PROPERTY LINE
- ACCESSIBLE ROUTE (2019 C.B.C. SECTION 11B-206)

THE ACCESSIBLE ROUTE IS A CONTINUOUS UNOBSTRUCTED PATH CONNECTING ACCESSIBLE ELEMENTS AND SPACES OF AN ACCESSIBLE SITE, BUILDING OR FACILITY THAT CAN BE NEGOTIATED BY A PERSON WITH A DISABILITY USING A WHEELCHAIR, AND THAT IS ALSO SAFE FOR AND USABLE BY PERSONS WITH OTHER DISABILITIES. ACCESSIBLE ROUTES SHALL COMPLY WITH CBC 11B-402. IN GENERAL, EXTERIOR ACCESSIBLE ROUTES SHALL COMPLY WITH THE FOLLOWING: SHALL BE STABLE, FIRM, AND SLIP RESISTANT; HAVE A 1:20 MAXIMUM RUNNING SLOPE FOR WALKS; HAVE A 1:12 MAXIMUM SLOPE FOR RAMPS AND CURB RAMPS; HAVE A 1/4:12 MAXIMUM CROSS SLOPE; HAVE A 48" MINIMUM WIDTH; HAVE NO VERTICAL OFFSETS GREATER THAN 1/4"; OFFSETS BETWEEN 1/4" AND 1/2" SHALL BE BEVELED WITH A SLOPE NOT EXCEEDING 1V:2H; HAVE NO OPENINGS ALLOWING THE PASSAGE OF A 1/2" DIAMETER SPHERE; ELONGATED OPENINGS SHALL BE PERPENDICULAR TO THE DIRECTION OF TRAVEL; HAVE A MINIMUM 6" HIGH CURB OR GUARDRAIL AT EDGES WHERE THE DROP OFF EXCEEDS 4" EXCEPT WHERE ADJACENT TO VEHICULAR WAYS; BE FREE OF ELEMENTS PROJECTING MORE THAN 4" FROM WALLS BETWEEN 27" AND 80" ABOVE THE WALKING SURFACE; AND HAVE 80" MINIMUM VERTICAL CLEARANCE.

DESIGN PROFESSIONAL IN CHARGE STATEMENT: (REF. DSA PROCEDURE PR 15-01)

- THE P.O.T. IDENTIFIED IN THESE CONSTRUCTION DOCUMENTS MEETS THE REQUIREMENTS OF THE CURRENT APPLICABLE CALIFORNIA BUILDING CODE (CBC) ACCESSIBILITY PROVISIONS FOR PATH OF TRAVEL REQUIREMENTS FOR ALTERATIONS, ADDITIONS AND STRUCTURAL REPAIRS.
- AS PART OF THE DESIGN OF THIS PROJECT, THE P.O.T. WAS EXAMINED AND ANY ELEMENTS, COMPONENTS, OR PORTIONS OF THE P.O.T. THAT WERE DETERMINED TO BE NONCOMPLIANT WITH THE CBC HAVE BEEN IDENTIFIED AND THE CORRECTIVE WORK NECESSARY TO BRING THEM INTO COMPLIANCE HAS BEEN INCLUDED WITHIN THE SCOPE OF THIS PROJECT'S WORK THROUGH DETAILS, DRAWINGS, AND SPECIFICATIONS INCORPORATED INTO THESE CONSTRUCTION DOCUMENTS.
- ANY NONCOMPLIANT ELEMENTS, COMPONENTS OR PORTIONS OF THE P.O.T. THAT WILL NOT BE CORRECTED BY THIS PROJECT BASED ON VALUATION THRESHOLD LIMITATIONS OR A FINDING OF UNREASONABLE HARDSHIP ARE INDICATED IN THESE CONSTRUCTION DOCUMENTS.
- DURING CONSTRUCTION, IF P.O.T. ITEMS WITHIN THE SCOPE OF THE PROJECT REPRESENTED AS CBC COMPLIANT ARE FOUND TO BE NONCONFORMING BEYOND REASONABLE CONSTRUCTION TOLERANCES, THE ITEMS SHALL BE BROUGHT INTO COMPLIANCE WITH THE CBC AS A PART OF THIS PROJECT BY MEANS OF A CONSTRUCTION CHANGE DOCUMENT.

GENERAL NOTES

A. THE CONTRACTOR SHALL ACCEPT THE SITE IN ITS PRESENT CONDITION & DEMOLISH AND/OR REMOVE FROM THE AREA OF THE PROJECT ALL STRUCTURES, BOTH SURFACE & SUBSURFACE, TREES, BRUSH, ROOTS, DEBRIS, ORGANIC MATTER, & ALL OTHER MATTER DETERMINED BY THE INSPECTOR TO BE DELETERIOUS. SUCH MATERIAL SHALL BE REMOVED FROM THE SITE BY THE CONTRACTOR.

B. EXCAVATIONS SHALL BE ADEQUATELY SHORED, BRACED & SHEETED SO THAT THE EARTH WILL NOT SLIDE OR SETTLE & SO THAT ALL EXISTING IMPROVEMENTS OF ANY KIND WILL BE FULLY PROTECTED FROM DAMAGE. WHERE THE EXCAVATION FOR A CONDUIT TRENCH, AND/OR STRUCTURE IS FIVE FEET OR MORE IN DEPTH, THE CONTRACTOR SHALL PROVIDE ADEQUATE SHEETING, CONFORMING TO THE APPLICABLE CONSTRUCTION SAFETY ORDERS OF THE DIVISION OF INDUSTRIAL SAFETY OF THE STATE OF CALIFORNIA. THE CONTRACTOR SHALL COMPLY WITH OSHA REQUIREMENTS AT ALL TIMES.

C. FINISH GRADE SHALL HAVE A 1.5% SLOPE AWAY FROM THE BLDG. FOR A DISTANCE NOT LESS THAN 5'-0" FROM THE BLDG.

D. EXISTING UNDERGROUND UTILITIES & IMPROVEMENTS ARE SHOWN IN THEIR APPROX. LOCATIONS BASED UPON RECORD INFO. AVAILABLE TO THE ARCHITECT AT THE TIME OF PREPARATION OF THESE PLANS. LOCATIONS MAY NOT HAVE BEEN VERIFIED IN THE FIELD & NO GUARANTEE IS MADE AS TO THE ACCURACY OR COMPLETENESS OF THE INFO. SHOWN. THE CONTRACTOR SHALL NOTIFY UTILITY COMPANIES AT LEAST 2 WORKING DAYS IN ADVANCE OF CONSTRUCTION TO FIELD LOCATE UTILITIES. CALL UNDERGROUND SERVICE ALERT (U.S.A), 1-800-642-2444.

E. REFER TO CIVIL, LANDSCAPE, PLUMBING & ELECTRICAL FOR UTILITY INFORMATION. CONTRACTOR TO COORDINATE ALL TRADES TO MAINTAIN PROPER CLEARANCES & AVOID CONFLICTS.

OVERALL SITE PLAN — 1" = 100'-0" — 10

FOR BID ONLY

Teter, LLP expressly reserves its common law copyright and other property rights in these plans. This document, the ideas and designs incorporated herein, as an instrument of professional service, is not to be used in whole or part, for any other project without prior written authorization.

MARK	DATE	DESCRIPTION
	11/1/2022	DSA RESUBMITTAL

TETER, LLP
FRESNO HEADQUARTERS
VISALIA | BAKERSFIELD | MODESTO | SAN LUIS OBISPO
ARCHITECTS ENGINEERS CONNECTED

TETER

TULARE CAMPUS CTE
COLLEGE OF THE SEQUOIAS
4999 E. BARDSLEY AVE.
TULARE, CA

DRAWING TITLE
OVERALL SITE PLAN

PROJECT NO.
21-12032

DRAWING
G100

\\tetr-file1\Users\ryan.odom\Documents\12032-A-COS Tulare CTE_ryan.odomNLB27.rvt
PLOT DATE: 11/1/2022 9:41:51 PM

\\tetr-file1\Users\ryan.odom\Documents\12032-A-COS Tulare CTE_ryan.odomNLB27.rvt

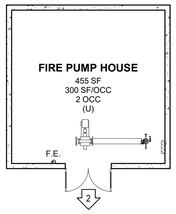

BUILDING CODE ANALYSIS - FIRE PUMP HOUSE

BUILDING CLASSIFICATION - FIRE PUMP HOUSE

1. OCCUPANCY CLASSIFICATION(S) (CBC SECTION 302):
   'U', UTILITY
2. CONSTRUCTION TYPE II-B NON COMBUSTIBLE (FULL AUTOMATIC SPRINKLERS)
3. HEIGHT AND AREA JUSTIFICATION AND CALCULATIONS:

   HEIGHT IN FEET:
   - ALLOWABLE (CBC TABLE 504.3): 75 FEET
   - ACTUAL: ± 11' - 0"

   HEIGHT IN STORIES:
   - ALLOWABLE (CBC TABLE 504.4): 3 STORIES
   - ACTUAL: 1 STORY

   AREA:
   - ALLOWABLE AREA (CBC 506.2): U = 34,000 SF
   - ACTUAL AREA: 455 SF

OCCUPANT LOAD FACTORS

PER 2019 CALIFORNIA BUILDING CODE TABLE 1004.1.2
A. ACCESSORY, MECH/EQUIP. ROOM: 300 SF/OCC. GROSS

TOTAL BUILDING OCCUPANT LOAD:
BUILDING TOTAL: 2 OCCUPANTS

EGRESS

A. COMMON PATH OF EGRESS TRAVEL (CBC TABLE 1006.2.1): 100' - 0" MAX.
B. EXIT ACCESS TRAVEL DISTANCE (CBC SECTION 1017 & TABLE 1017.2): 400' MAX. (U OCC.)
C. NUMBER OF EXITS REQUIRED (CBC SECTION 1006 & TABLE 1006.3.1): 1
D. EGRESS WIDTH COMPONENT (CBC SECTION 1005.3.2) : 0.2"/OCC.; A 36" WIDE DOOR HAS A CLEAR WIDTH OF 33" MIN. AND WILL ACCOMMODATE 165 OCCUPANTS.

FIRE PUMP HOUSE WALL CONSTRUCTION - 6" TOTAL CONCRETE THICKNESS - MEETS REQUIREMENTS OF CBC TABLE 721.1(2) ITEM 4-1.1 FOR REQUIRED 1 HOUR RATING REQUIRED BY NFPA 20 - 2016.

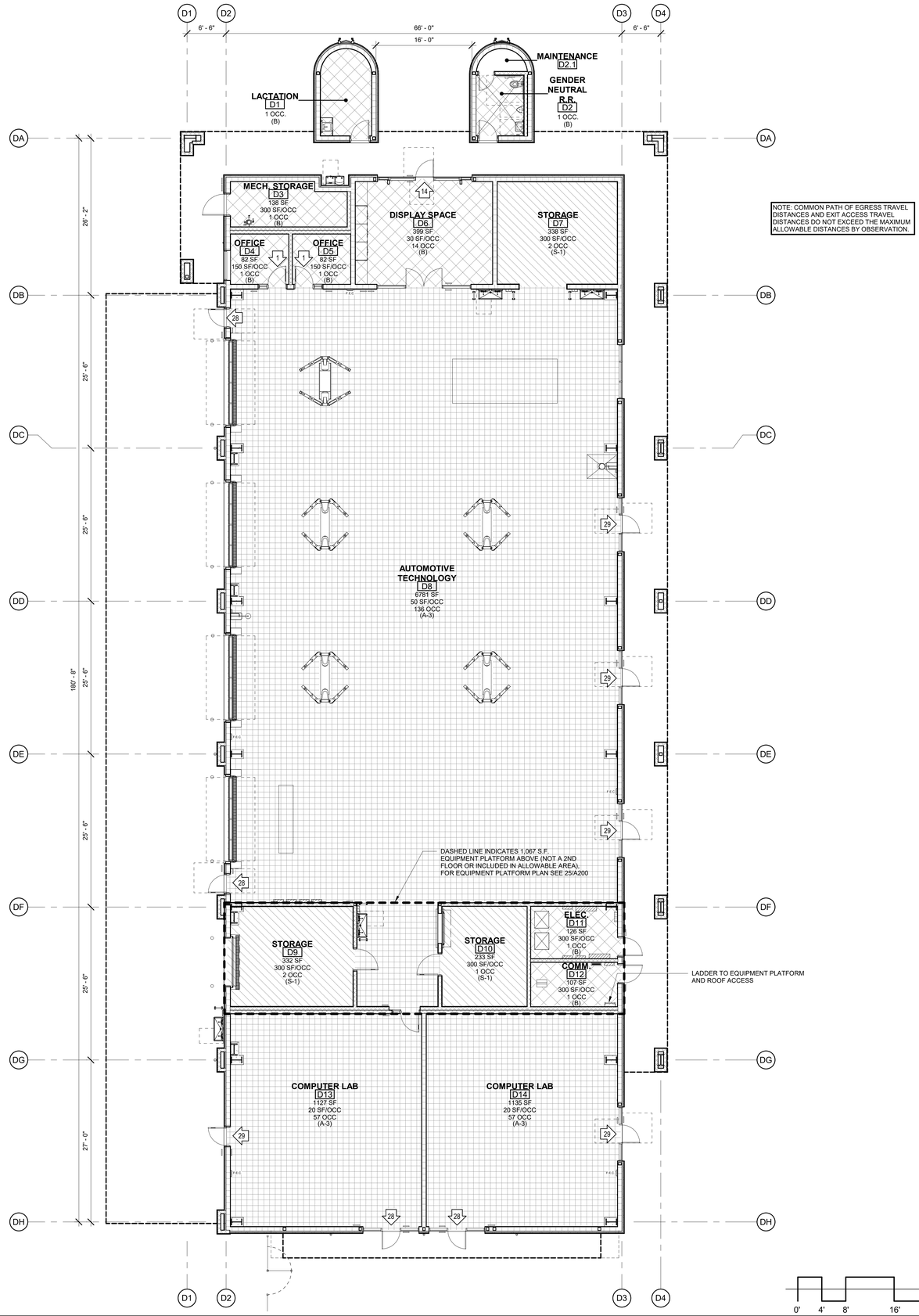

FLOOR PLAN - FIRE PUMP HOUSE ANALYSIS 1/8" = 1'-0" 25

FLOOR PLAN - BUILDING D ANALYSIS 1/8" = 1'-0" 10

BUILDING CODE ANALYSIS - BUILDING D

PROJECT CONSISTS OF NEW BUILDINGS D, E, F, AND FIRE PUMP HOUSE. BUILDINGS E AND F ARE CONSIDERED ONE BUILDING FOR PURPOSES OF DETERMINING ALLOWABLE AREA. BUILDINGS D AND FIRE PUMP HOUSE ARE EACH SEPARATE BUILDINGS.

1. OCCUPANCY CLASSIFICATION(S) (CBC SECTION 302):
   A. 'A-3', CLASSROOMS WITH 50 OR MORE OCCUPANTS
   B. 'B', BUSINESS/COLLEGE CLASSROOMS, LESS THAN 50 OCCUPANTS, AND STAFF OFFICES
   C. 'S-1', MODERATE HAZARD STORAGE
2. CONSTRUCTION TYPE II-B NON COMBUSTIBLE (FULL AUTO SPRINKLERS)
3. HEIGHT IN FEET:
   A. ALLOWABLE (CBC TABLE 504.3): 55 FEET
   B. ACTUAL: 39 FEET
4. HEIGHT IN STORIES:
   A. ALLOWABLE (CBC TABLE 504.4): 2 STORIES (A-3 OCC. MOST RESTRICTIVE)
   B. ACTUAL: 1 STORY
5. SEPERATION OF OCCUPANCIES (CBC SECTION 508.4)
   A. NONE REQUIRED PER CBC 508.3
6. AREA
   A. ALLOWABLE AREA (CBC 506)(ALLOWABLE AREA BASED ON NON-SEPARATED OCCUPANCIES PER CBC 508.3 WITH A-3 OCCUPANCY BEING THE MOST RESTRICTIVE, AND II-B TYPE OF CONSTRUCTION); 38,000 SF
   B. SINGLE OCCUPANCY ONE STORY BUILDING (CBC 506.2.1)
      a. Aa = At + (NS x If) = 38,000 SF TOTAL ALLOWABLE AREA
      b. At = 38,000 SF (CBC TABLE 506.2; S1 VALUE)
      c. NS = 9,500 SF (CBC TABLE 506.2, NS VALUE) NOT USED
      d. If = 0.75 (CBC 506.3, BASED ON MINIMUM 30 FT YARDS ALL AROUND)
   C. ACTUAL AREAS

ACTUAL BUILDING AREAS IN SF	
	BLDG 'D'
ENCLOSED	10,950 SF
OVERHANGS	5,094 SF
TOTAL	16,044 SF

Aa = 38,000 SF; ACTUAL AREA, BUILDING D = 16,044 SF : OK

OCCUPANT LOAD FACTORS

PER 2019 CALIFORNIA BUILDING CODE TABLE 1004.5
A. BUSINESS: 150 SF/OCC. GROSS
B. VOCATIONAL SHOPS & COMPUTER LAB: 50 SF/OCC
C. COLLEGE CLASSROOMS: 20 SF/OCC.
D. ACCESSORY, STORAGE, RESTROOM, AND MECH/EQUIP. ROOM: 300 SF/OCC. GROSS
E. ASSEMBLY, EXHIBIT GALLERY AND MUSEUM: 30 SF/OCC.

TOTAL BUILDING OCCUPANT LOAD:
BUILDING D: 207 OCC

CORRIDOR CONSTRUCTION

A. FIRE RESISTIVE RATING (CBC SECTION 1020 AND TABLE 1020.1): NONE REQUIRED FOR SPRINKLERED BUILDING.
B. CORRIDOR WIDTH (CBC TABLE 1020.2): 44" MIN.
C. DEAD END (CBC SECTION 1020.4): 50'-0" MAX.
D. SEE EXITING PLAN FOR DEAD END DISTANCES (NONE).

EGRESS

A. COMMON PATH OF EGRESS TRAVEL (CBC TABLE 1006.2.1): 75' - 0" MAX.
B. EXIT ACCESS TRAVEL DISTANCE (CBC SECTION 1017 & TABLE 1017.2): 250' - 0" MAX.
C. NUMBER OF EXITS REQUIRED (CBC SECTION 1006 & TABLE 1006.3.1)
   1. REQUIRED FOR FIRST FLOOR: 2 MIN. FOR A & B OCCUPANCIES OVER 49 & S OCCUPANCIES OVER 29
D. EGRESS WIDTH COMPONENT (CBC SECTION 1005.3.2) : 0.2"/OCC.; A 36" WIDE DOOR HAS A CLEAR WIDTH OF 33" MIN. AND WILL ACCOMMODATE 165 OCCUPANTS.
E. SEE EXITING PLAN FOR TRAVEL DISTANCE & EGRESS WIDTH.

WALL LEGEND

SYM.	DESCRIPTION
	4" METAL STUDS, 16" O.C.
	6" METAL STUDS, 16" O.C.
	DBL. 6" METAL STUDS, 16" O.C.
	8" METAL STUDS, 16" O.C.
	DBL. 8" METAL STUDS, 16" O.C.

LEGEND

- PATH OF TRAVEL
- MOST REMOTE OCCUPIED LOCATION
- DIRECTION OF EGRESS
- XX — NUMBER OF OCCUPANTS EXITING
- ROOM 101 — ROOM NAME & NUMBER
- 150 SF (NET) / 50 SF/OCC / 00 OCC (A) — ROOM AREA; OCCUPANT LOAD FACTOR; CALCULATED OCCUPANT LOAD
- F.E.C. — FIRE EXTINGUISHER & CABINET, SEE **4 / A850**
- F.E. — BRACKET MOUNTED FIRE EXTINGUISHER, SEE **4 / A801**
- HATCH 1 (NO HATCH) CIRCULATION SPACE
- HATCH 2 (GRID) 'A-3' OCCUPANCY; UNCONCENTRATED ASSEMBLY, 15 SF/OCC.; VOCATIONAL USE, 50 SF/OCC. > 49 OCC.
- HATCH 3 (DIAMOND) 'B' OCCUPANCY; OFFICE USE, 150 SF/OCC.; CLASSROOMS 20 SF/OCC. < 50 OCC.; VOCATIONAL USE, 50 SF/OCC. < 50 OCC.
- HATCH 5 (DIAGONAL) S-1 OCCUPANCY; STORAGE, 300 SF/OCC.

KEYPLAN

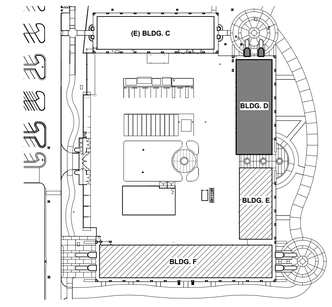

FOR BID ONLY

Teter, LLP expressly reserves its common law copyright and other property rights in these plans. This document, the ideas and designs incorporated herein, as an instrument of professional service, is not to be used in whole or in part, for any other project without prior written authorization.

MARK	DATE	DESCRIPTION
	11/1/2022	DSA RESUBMITTAL

TETER, LLP
FRESNO HEADQUARTERS
VISALIA I BAKERSFIELD I MODESTO I SAN LUIS OBISPO
ARCHITECTS ENGINEERS CONNECTED

TULARE CAMPUS CTE
COLLEGE OF THE SEQUOIAS
4999 E. BARDSLEY AVE.
TULARE, CA

DRAWING TITLE
BUILDING CODE ANALYSIS BUILDING D & FIRE PUMP HOUSE

PROJECT NO.
21-12032

DRAWING
G200

PLOT DATE: 11/1/2022 9:42:05 PM

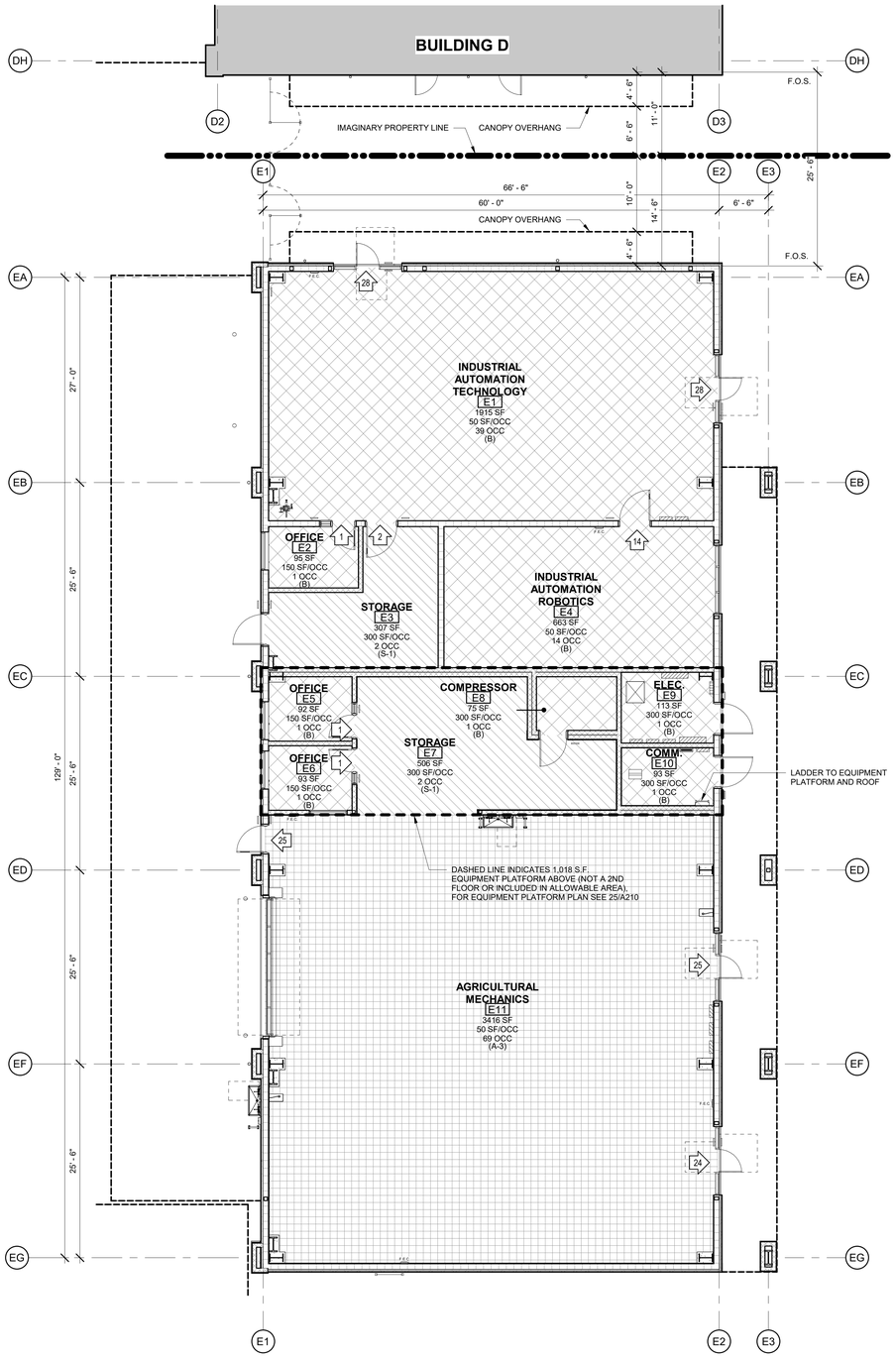

BUILDING CODE ANALYSIS - BUILDING E/F

PROJECT CONSISTS OF NEW BUILDINGS D, E, F, AND FIRE PUMP HOUSE. BUILDINGS E AND F ARE CONSIDERED ONE BUILDING FOR PURPOSES OF DETERMINING ALLOWABLE AREA. BUILDINGS D AND FIRE PUMP HOUSE ARE EACH SEPARATE BUILDINGS.

1. OCCUPANCY CLASSIFICATION(S) (CBC SECTION 302):
   A. 'A-3', CLASSROOMS WITH 50 OR MORE OCCUPANTS
   B. 'B', BUSINESS/COLLEGE CLASSROOMS, LESS THAN 50 OCCUPANTS, AND STAFF OFFICES
   C. 'S-1', MODERATE HAZARD STORAGE
2. CONSTRUCTION TYPE II-B NON COMBUSTIBLE (FULL AUTO SPRINKLERS)
3. HEIGHT IN FEET:
   A. ALLOWABLE (CBC TABLE 504.3): 55 FEET
   B. ACTUAL: 39 FEET
4. HEIGHT IN STORIES:
   A. ALLOWABLE (CBC TABLE 504.4): 2 STORIES (A-3 OCC. MOST RESTRICTIVE)
   B. ACTUAL: 1 STORY
5. AREA
   A. ALLOWABLE AREA (CBC 506)(ALLOWABLE AREA BASED ON NON-SEPARATED OCCUPANCIES PER CBC 508.3 WITH A-3 OCCUPANCY BEING THE MOST RESTRICTIVE, AND II-B TYPE OF CONSTRUCTION); 38,000 SF
      a. SINGLE OCCUPANCY ONE STORY BUILDING (CBC 506.2.1)
      b. Aa = At + (NS x f) = 38,000 SF TOTAL ALLOWABLE AREA
      c. At = 38,000 SF (CBC TABLE 506.2, S1 VALUE)
      d. NS = 9,500 SF (CBC TABLE 506.2, NS VALUE) NOT USED
      e. If = 0.75 (CBC 506.3, BASED ON MINIMUM 30 FT YARDS ALL AROUND)
   B. ACTUAL AREAS

ACTUAL BUILDING AREAS IN SF			
	BLDG 'E'	BLDG 'F'	TOTAL
ENCLOSED	6,794 SF	18,013 SF	24,807 SF
OVERHANGS	3,410 SF	8,558 SF	11,968 SF
TOTAL	10,204 SF	26,571 SF	36,775 SF

Aa = 38,000 SF; ACTUAL AREA, BUILDING E/F = 36,775; OK

OCCUPANT LOAD FACTORS

PER 2019 CALIFORNIA BUILDING CODE TABLE 1004.5
A. BUSINESS: 150 SF/OCC. GROSS
B. VOCATIONAL SHOPS & COMPUTER LAB: 50 SF/OCC
C. COLLEGE CLASSROOMS: 20 SF/OCC.
D. ACCESSORY, STORAGE, RESTROOM, AND MECH/EQUIP. ROOM: 300 SF/OCC. GROSS
E. ASSEMBLY, EXHIBIT GALLERY AND MUSEUM: 30 SF/OCC.

TOTAL BUILDING OCCUPANT LOAD:
BUILDING E: 127 OCC
BUILDING F: 361 OCC
TOTAL BUILDING: 488 OCC

CORRIDOR CONSTRUCTION

A. FIRE RESISTIVE RATING (CBC SECTION 1020 AND TABLE 1020.1): NONE REQUIRED FOR SPRINKLERED BUILDING.
B. CORRIDOR WIDTH (CBC TABLE 1020.2): 44" MIN.
C. DEAD END (CBC SECTION 1020.4): 50'-0" MAX.
D. SEE EXITING PLAN FOR DEAD END DISTANCES.

EGRESS

A. COMMON PATH OF EGRESS TRAVEL (CBC TABLE 1006.2.1): 75' - 0" MAX.
B. EXIT ACCESS TRAVEL DISTANCE (CBC SECTION 1017 & TABLE 1017.2): 250' - 0" MAX.
C. NUMBER OF EXITS REQUIRED (CBC SECTION 1006 & TABLE 1006.3.1)
   1. REQUIRED FOR FIRST FLOOR: 2 MIN. FOR A, B & F OCCUPANCIES OVER 49 & S OCCUPANCIES OVER 29
D. EGRESS WIDTH COMPONENT (CBC SECTION 1005.3.2) : 0.2"/OCC.; A 36" WIDE DOOR HAS A CLEAR WIDTH OF 33" MIN. AND WILL ACCOMMODATE 165 OCCUPANTS.
E. SEE EXITING PLAN FOR TRAVEL DISTANCE & EGRESS WIDTH.

WALL LEGEND

SYM.	DESCRIPTION
	4" METAL STUDS, 16" O.C.
	6" METAL STUDS, 16" O.C.
	DBL. 6" METAL STUDS, 16" O.C.
	8" METAL STUDS, 16" O.C.
	DBL. 8" METAL STUDS, 16" O.C.

LEGEND

- PATH OF TRAVEL
- MOST REMOTE OCCUPIED LOCATION
- DIRECTION OF EGRESS
- XX — NUMBER OF OCCUPANTS EXITING
- ROOM 101 — ROOM NAME & NUMBER
- 150 SF (NET) — ROOM AREA
- 50 SF/OCC — OCCUPANT LOAD FACTOR
- 00 OCC (A) — CALCULATED OCCUPANT LOAD
- F.E.C. — FIRE EXTINGUISHER & CABINET, SEE **4 / A850**
- F.E. A — BRACKET MOUNTED FIRE EXTINGUISHER, SEE **4 / A801**
- HATCH 1 (NO HATCH) CIRCULATION SPACE
- HATCH 2 (GRID) 'A-3' OCCUPANCY; UNCONCENTRATED ASSEMBLY, 15 SF/OCC.; VOCATIONAL USE, 50 SF/OCC. > 49 OCC.
- HATCH 3 (DIAMOND) 'B' OCCUPANCY; OFFICE USE, 150 SF/OCC.; CLASSROOMS 20 SF/OCC. < 50 OCC.; VOCATIONAL USE, 50 SF/OCC. < 50 OCC.
- HATCH 5 (DIAGONAL) S-1 OCCUPANCY; STORAGE, 300 SF/OCC.

KEYPLAN

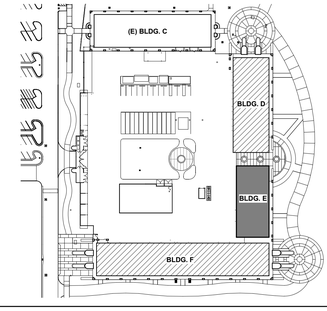

NORTH

0' 4' 8' 16' 32'

1/8" = 1'-0"

FLOOR PLAN - BUILDING E ANALYSIS

10

FOR BID ONLY

Teter, LLP expressly reserves its common law copyright and other property rights in these plans. This document, the ideas and designs incorporated herein, as an instrument of professional service, is not to be used in whole or part, for any other project without prior written authorization.

MARK	DATE	DESCRIPTION
	11/1/2022	DSA RESUBMITTAL

LICENSED ARCHITECT * VINOD KUMAR JOSHI * No. C-29823 * STATE OF CALIFORNIA

TETER, LLP
FRESNO HEADQUARTERS
VISALIA | BAKERSFIELD | MODESTO | SAN LUIS OBISPO
ARCHITECTS ENGINEERS CONNECTED

TETER

TULARE CAMPUS CTE
COLLEGE OF THE SEQUOIAS
4999 E. BARDSLEY AVE.
TULARE, CA

DRAWING TITLE
BUILDING CODE ANALYSIS BUILDING E

PROJECT NO.
21-12032

DRAWING
G210

PLOT DATE: 11/1/2022 9:42:13 PM

\\tetr-file1\Users\ryan.odom\Documents\12032-A-COS Tulare CTE_ryan.odomNLB27.rvt

\\tetr-file1\Users\ryan.odom\Documents\12032-A-COS Tulare CTE_ryan.odomNLB27.rvt

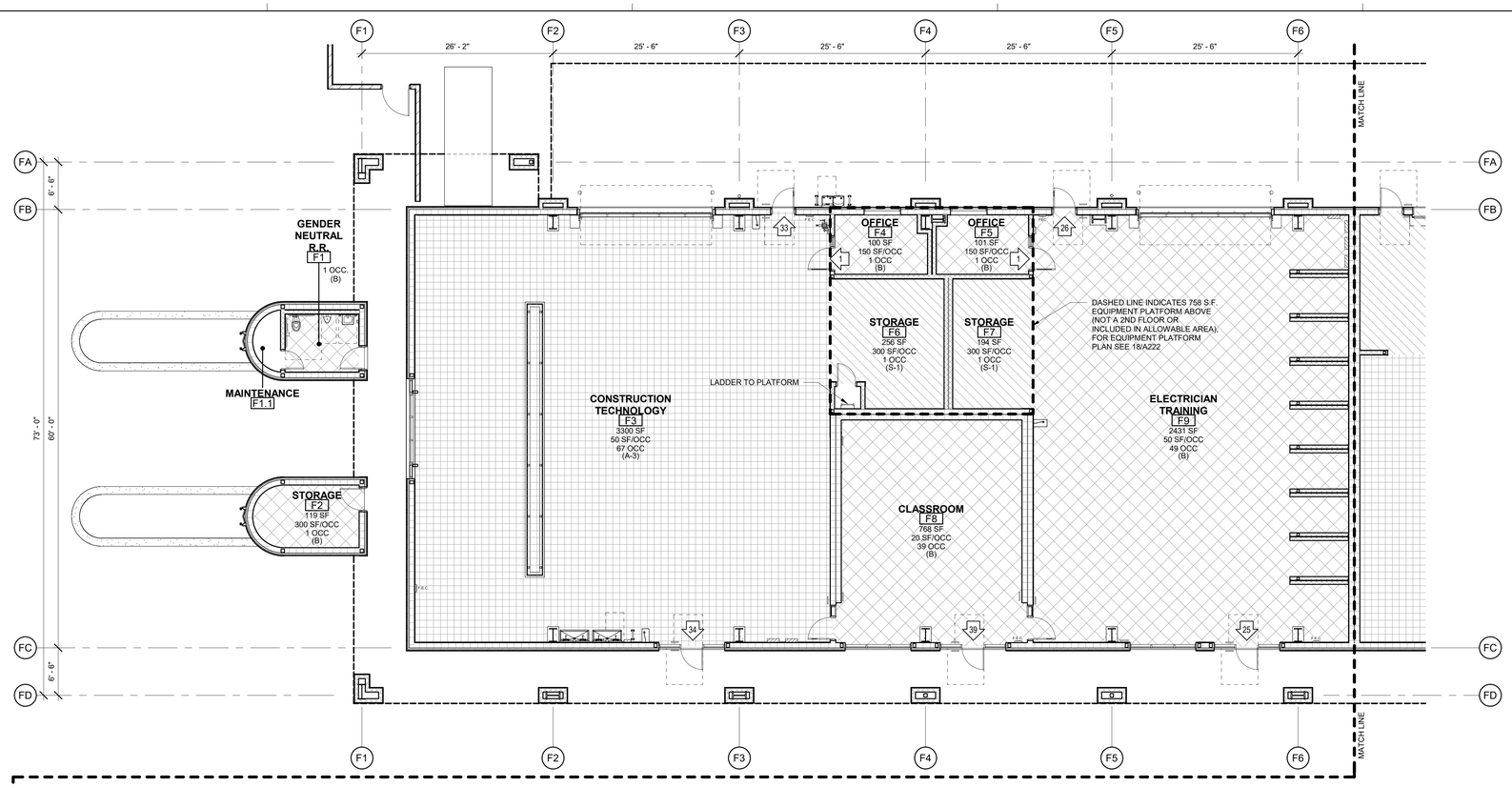

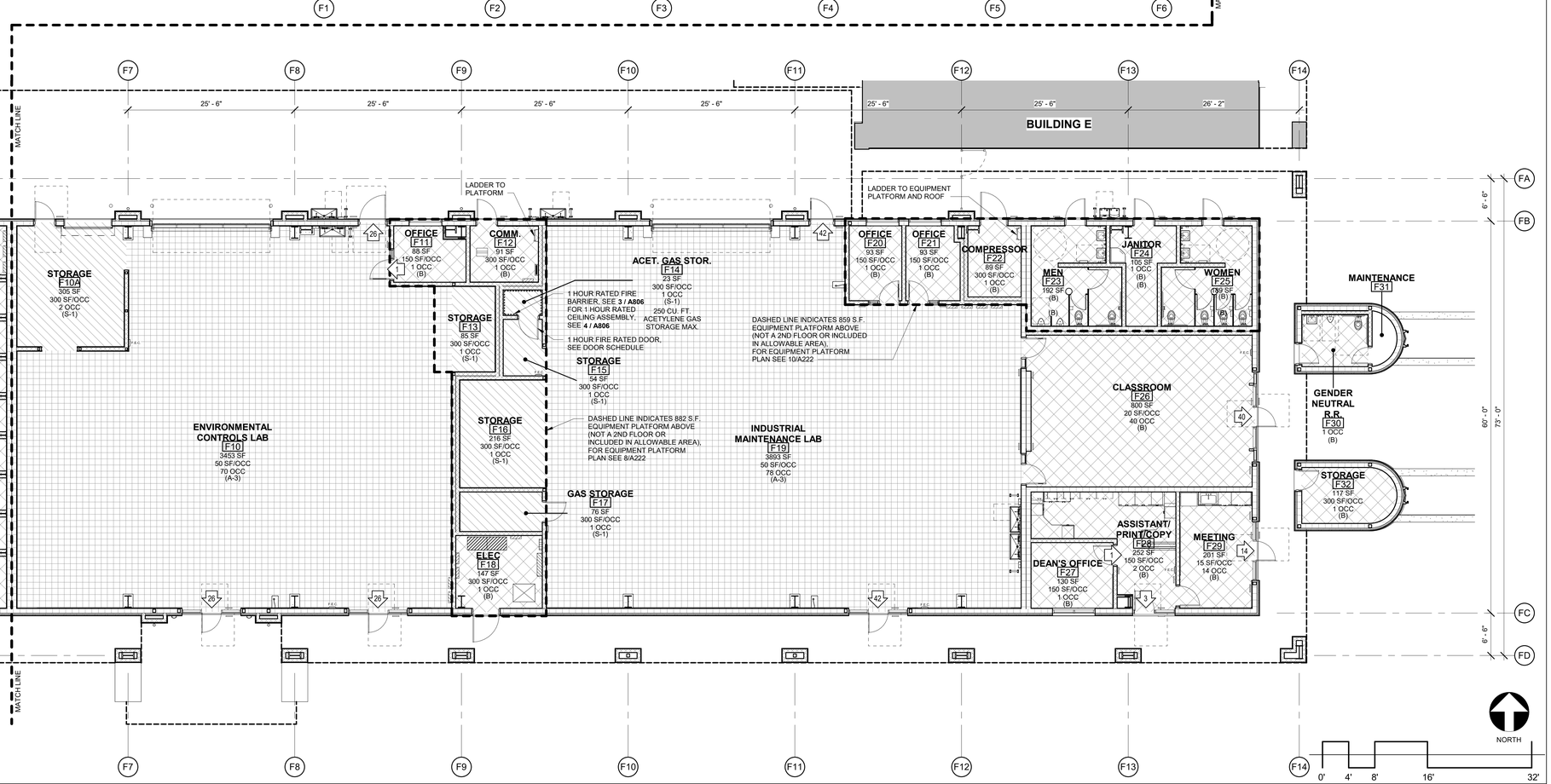

FLOOR PLAN - BUILDING F

1/8" = 1'-0"

10

BUILDING CODE ANALYSIS - BUILDING E/F

PROJECT CONSISTS OF NEW BUILDINGS D, E, F, AND FIRE PUMP HOUSE. BUILDINGS E AND F ARE CONSIDERED ONE BUILDING FOR PURPOSES OF DETERMINING ALLOWABLE AREA. BUILDINGS D AND FIRE PUMP HOUSE ARE EACH SEPARATE BUILDINGS.

1. OCCUPANCY CLASSIFICATION(S) (CBC SECTION 302):

   A. 'A-3', CLASSROOMS WITH 50 OR MORE OCCUPANTS
   B. 'B', BUSINESS/COLLEGE CLASSROOMS, LESS THAN 50 OCCUPANTS, AND STAFF OFFICES
   C. 'S-1', MODERATE HAZARD STORAGE

2. CONSTRUCTION TYPE II-B NON COMBUSTIBLE (FULL AUTO SPRINKLERS)

3. HEIGHT IN FEET:
   A. ALLOWABLE (CBC TABLE 504.3): 55 FEET
   B. ACTUAL: 39 FEET

4. HEIGHT IN STORIES:
   A. ALLOWABLE (CBC TABLE 504.4): 2 STORIES (A-3 OCC. MOST RESTRICTIVE)
   B. ACTUAL: 1 STORY

5. AREA
   A. ALLOWABLE AREA (CBC 506)(ALLOWABLE AREA BASED ON NON-SEPARATED OCCUPANCIES PER CBC 508.3 WITH A-3 OCCUPANCY BEING THE MOST RESTRICTIVE, AND II-B TYPE OF CONSTRUCTION); 38,000 SF

      a. SINGLE OCCUPANCY ONE STORY BUILDING (CBC 506.2.1)
      b. Aa = At + (NS x f) = 38,000 SF TOTAL ALLOWABLE AREA
      c. At = 38,000 SF (CBC TABLE 506.2, S1 VALUE)
      d. NS = 9,500 SF (CBC TABLE 506.2, NS VALUE) NOT USED
      e. If = 0.75 (CBC 506.3, BASED ON MINIMUM 30 FT YARDS ALL AROUND)

   B. ACTUAL AREAS

ACTUAL BUILDING AREAS IN SF			
	BLDG 'E'	BLDG 'F'	TOTAL
ENCLOSED	6,794 SF	18,013 SF	24,807 SF
OVERHANGS	3,410 SF	8,558 SF	11,968 SF
TOTAL	10,204 SF	26,571 SF	36,775 SF

Aa = 38,000 SF; ACTUAL AREA, BUILDING E/F = 36,775; OK

OCCUPANT LOAD FACTORS

PER 2019 CALIFORNIA BUILDING CODE TABLE 1004.5
A. BUSINESS: 150 SF/OCC. GROSS
B. VOCATIONAL SHOPS & COMPUTER LAB: 50 SF/OCC
C. COLLEGE CLASSROOMS: 20 SF/OCC.
D. ACCESSORY, STORAGE, RESTROOM, AND MECH/EQUIP. ROOM: 300 SF/OCC. GROSS
E. ASSEMBLY, EXHIBIT GALLERY AND MUSEUM: 30 SF/OCC.

TOTAL BUILDING OCCUPANT LOAD:
BUILDING E: 127 OCC
BUILDING F: 361 OCC
TOTAL BUILDING: 488 OCC

CORRIDOR CONSTRUCTION

A. FIRE RESISTIVE RATING (CBC SECTION 1020 AND TABLE 1020.1): NONE REQUIRED FOR SPRINKLERED BUILDING.
B. CORRIDOR WIDTH (CBC TABLE 1020.2): 44" MIN.
C. DEAD END (CBC SECTION 1020.4): 50'-0" MAX.
D. SEE EXITING PLAN FOR DEAD END DISTANCES.

EGRESS

A. COMMON PATH OF EGRESS TRAVEL (CBC TABLE 1006.2.1): 75' - 0" MAX.
B. EXIT ACCESS TRAVEL DISTANCE (CBC SECTION 1017 & TABLE 1017.2): 250' - 0" MAX.
C. NUMBER OF EXITS REQUIRED (CBC SECTION 1006 & TABLE 1006.3.1)
   1. REQUIRED FOR FIRST FLOOR: 2 MIN. FOR A, B & F OCCUPANCIES OVER 49 & S OCCUPANCIES OVER 29
D. EGRESS WIDTH COMPONENT (CBC SECTION 1005.3.2) : 0.2"/OCC.; A 36" WIDE DOOR HAS A CLEAR WIDTH OF 33" MIN. AND WILL ACCOMMODATE 165 OCCUPANTS.
E. SEE EXITING PLAN FOR TRAVEL DISTANCE & EGRESS WIDTH.

WALL LEGEND

SYM.	DESCRIPTION
	4" METAL STUDS, 16" O.C.
	6" METAL STUDS, 16" O.C.
	DBL. 6" METAL STUDS, 16" O.C.
	8" METAL STUDS, 16" O.C.
	DBL. 8" METAL STUDS, 16" O.C.

LEGEND

- PATH OF TRAVEL
- MOST REMOTE OCCUPIED LOCATION
- DIRECTION OF EGRESS
- XX — NUMBER OF OCCUPANTS EXITING
- ROOM 101 — ROOM NAME & NUMBER
- 150 SF (NET) — ROOM AREA
- 50 SF/OCC — OCCUPANT LOAD FACTOR
- 00 OCC (A) — CALCULATED OCCUPANT LOAD
- F.E.C. — FIRE EXTINGUISHER & CABINET, SEE **4 / A850**
- F.E. A — BRACKET MOUNTED FIRE EXTINGUISHER, SEE **4 / A801**
- HATCH 1 (NO HATCH) CIRCULATION SPACE
- HATCH 2 (GRID) "A-3" OCCUPANCY; UNCONCENTRATED ASSEMBLY, 15 SF/OCC.; VOCATIONAL USE, 50 SF/OCC. > 49 OCC.
- HATCH 3 (DIAMOND) "B" OCCUPANCY; OFFICE USE, 150 SF/OCC.; CLASSROOMS 20 SF/OCC. < 50 OCC.; VOCATIONAL USE, 50 SF/OCC. < 50 OCC.
- HATCH 5 (DIAGONAL) S-1 OCCUPANCY; STORAGE, 300 SF/OCC.

KEYPLAN

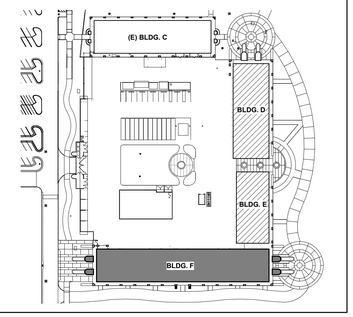

FOR BID ONLY

Teter, LLP expressly reserves its common law copyright and other property rights in these plans. This document, the ideas and designs incorporated herein, as an instrument of professional service, is not to be used in whole or in part, for any other project without prior written authorization.

MARK	DATE	DESCRIPTION
	11/1/2022	DSA RESUBMITTAL

TETER, LLP
ARCHITECTS ENGINEERS CONNECTED
FRESNO HEADQUARTERS
VISALIA | BAKERSFIELD | MODESTO | SAN LUIS OBISPO

TULARE CAMPUS CTE
COLLEGE OF THE SEQUOIAS
4999 E. BARDSLEY AVE.
TULARE, CA

DRAWING TITLE
BUILDING CODE ANALYSIS BUILDING F

PROJECT NO.
21-12032

DRAWING
G220

PLOT DATE: 11/1/2022 9:42:30 PM

P:\221-0340\Site\productiondrawings\221340_ts01.dwg

GENERAL TOPOGRAPHIC SURVEY LEGEND:

(NOT ALL SYMBOLS SHOWN APPEAR ON THE PLANS)

AB	ABUTMENT
AC	ASPHALTIC CONCRETE
ACE	ASPHALTIC CONCRETE EDGE
AD	ASPHALTIC CONCRETE DIKE
AWT	ALL-WEATHER TRACK
BD	BRIDGE DECK
BFC	BOTTOM FACE OF CURB
BGST	STEPS
BGTR	TOP OF ROOF
BGV	BUILDING VENTS
BOD	BOTTOM OF DITCH
BR	BARRICADE
BRK	BRICK
BW	BARRIER WALL
CB	CATCH BASIN
CDA	CONCRETE DRIVE APPROACH
CE	CONCRETE EDGE
CMP	CORRUGATED METAL PIPE
CON	CONCRETE
COTH	COMMUNICATION TRENCH
CR	CROWN OF ROAD
CRQ	QUARTER CROWN
CS	CONCRETE SLAB
CULV	CULVERT
CW	CONCRETE WALL
DD	DOWN DRAIN
DFL	DITCH FLOWLINE
DWY	DRIVEWAY
ECTH	ELECTRICAL TRENCH
EDR	EDGE OF DIRT ROAD
EGR	EDGE OF GRAVEL ROAD
EOD	EDGE OF OILED DIRT
EP	EDGE OF PAVEMENT
ES	EDGE OF SHOULDER
ET	EDGE OF TRAVELED WAY
FF	FINISH FLOOR
FOTH	FIBER OPTIC TRENCH
GB	GRADE BREAK
GFL	GUTTER FLOWLINE
GRA	GRAVEL SPOT SHOT
GRAE	EDGE OF GRAVEL
GSTH	GAS TRENCH
HDR	WOOD HEADER
HW	HEAD WALL
KR	K-RAIL
LIP	LIP OF GUTTER
LSDE	DECOMPOSED GRANITE EDGE
LSDG	DECOMPOSED GRANITE
LSGC	GROUND COVER
LSGF	GOLF COURSE FAIRWAY
LSGG	GOLF COURSE GREEN
LSGT	GOLF COURSE TEE
LSSA	SAND
LSSP	SLOPE PROTECTION
LSST	GOLF COURSE SAND TRAP
NPTH	NON-POTABLE TRENCH
PA	PATIO
PGTH	PROPANE GAS TRENCH
POS	POINT ON SLOPE
RCP	REINFORCED CONCRETE
RIEL	RIPARIAN EDGE OF LAKE
RIEP	RIPARIAN EDGE OF POND
RIES	RIPARIAN EDGE OF STREAM
RIEW	RIPARIAN EDGE OF WETLAND
RIFL	RIPARIAN FLOWLINE
RIMC	RIPARIAN MISC.
RIP	RIP-RAP SLOPE PROTECTION
RK	ROCK
RW	RETAINING WALL
SB	SPEED BUMP
SDCD	STORM DRAIN CROSS DRAIN
SDFL	STORM DRAIN FLOWLINE
SDGR	STORM DRAIN GRATE
SDMG	STORM DRAIN MANHOLE W/ GRATE
SSFL	SEWER FLOWLINE
SDTH	STORM DRAIN TRENCH
SSGT	STORM DRAIN GREASE TRAP
SSST	SEWER TANK (SEPTIC)
SSTH	SEWER TRENCH
SWK	SIDEWALK
SWL	SWALE
T	TURF
TBC	TOP BACK OF CURB
TBW	TOP BACK OF WALK
TF	TOP OF FOOTING
TFC	TOP FACE OF CURB
TFW	TOP FACE OF WALK
TLTH	TELEPHONE TRENCH
TOB	TOP OF BANK
TOE	TOE OF SLOPE
TOP	TOP OF SLOPE
TROO	TRUNCATED DOMES
TVTH	TV TRENCH
TW	TOP OF WALL
UTH	UNIDENTIFIED TRENCH/SCAR LINE
VGFL	VALLEY GUTTER FLOWLINE
VGR	VALLEY GUTTER
WALBA	BARRIER WALL
WALBW	BLOCK WALL
WALCW	CONCRETE WALL
WALHW	HEAD WALL
WALRW	RETAINING WALL
WALWW	WING WALL
WCR	WHEELCHAIR RAMP
WLPD	WELL PAD
WTTH	WATER TRENCH
WW	WING WALL
(335.21)	EXISTING ELEVATION
AL	ACCENT LIGHT
AV	ALFALFA VALVE
	BACKFLOW ASSEMBLY
	BASKETBALL GOAL
BOV	BLOW-OFF VALVE
	BM=BENCHMARK; OR SBM=SITE BENCHMARK
BO	BOLLARD
CO	CLEANOUT
COPB	COMMUNICATION PULLBOX
COVA	COMMUNICATION VAULT
312.55	SURVEY CONTROL MONUMENT
DF	DRINKING FOUNTAIN
DS	DOORSTOP
DW	DRYWELL
EG	ELECTRICAL GROUND
ELC	ELECTRICAL CONDUIT
E	ELECTRICAL METER
EPB	ELECTRICAL PULLBOX
E	ELECTRICAL VAULT LID
ETS	GAS ELECTRONIC TESTING STATION
FDC	FIRE DEPARTMENT CONNECTION
FH	FIRE HYDRANT
FP	FENCE POST
FPO	FLAG POLE
GAS	GAS LINE; DIAMETER AS SHOWN
GR	GAS REGULATOR
GAV	IRRIGATION GATE VALVE
G	GAS METER
GOP	GOAL POST
GP	GUY POLE
GRATE	GRATE; DIAMETER AS SHOWN
GS	GATE STOP
GSR	GAS RISER
GV	GAS VALVE
GRD	GROUNDING ROD
GUY	GUY WIRE
HB	HOSE BIBB
HR	HANDRAIL
ICB	IRRIGATION CONTROLLER
I	IRRIGATION DISTRICT MANHOLE
IVA	IRRIGATION REMOTE CONTROL VALVE
ISB	IRRIGATION SPLICE BOX
IHB	IN-GROUND HOSE BIBB
IP	IRON PIPE
JP	JOINT UTILITY POLE
LP	LIGHT POLE
MB	MAIL BOX
MH	MANHOLE
MV	MANUAL IRRIGATION VALVE
PB	PULLBOX
PIV	POST INDICATOR VALVE
	UTILITY STUB
	PARKING METER
POST	POST; DIAMETER AS SHOWN
PP	POWER POLE
PVC	PVC PIPE; DIAMETER AS SHOWN
QC	QUICK COUPLER VALVE
RD	ROOF DRAIN
RDU	ROOF DRAIN UNDERGROUND
RS	ROOF SUPPORT
	STADIUM LIGHT POLE
D	STORM DRAIN MANHOLE
	SIGN
SPB	SIGNAL PUSH BUTTON
	STREET LIGHT
SLE	PIPE SLEEVE; DIAMETER AS SHOWN
	SLOPE
SLPB	STREET LIGHT PULLBOX
SLV	PIPE SLEEVE; DIAMETER AS SHOWN
S	SEWER MANHOLE
SP	SERVICE POLE
SPB	SIGNAL PULLBOX
	SPRINKLER
SPO	STEEL POST; DIAMETER AS SHOWN
12"SS	SAND SEPARATOR; SIZE AS NOTED
24"STP	STAND PIPE; DIAMETER AS NOTED
TSTUMP	TREE STUMP; DIAMETER AS SHOWN
MW	SURVEY MONUMENT WELL
TEL	TELEPHONE; DIAMETER AS SHOWN
T	TELEPHONE MANHOLE
TN	TENNIS NET POLE
TP	TELEPHONE POLE
TPB	TELEPHONE PULLBOX
TVPB	TELEVISION PULLBOX
	TREE; SPREAD SHOWN GRAPHICALLY AND TRUNK DIAMETER AS SHOWN
	PALM TREE; SPREAD SHOWN GRAPHICALLY
TSB	TELEPHONE SPLICE BOX
	TRAFFIC SIGNAL POLE
TSPB	TRAFFIC SIGNAL PULLBOX
UP	UTILITY POLE
VB	VACUUM BREAKER
VB	VOLLEYBALL NET POST
VP	VENT PIPE; DIAMETER AS SHOWN
WELL	WELL
W	WATER METER
WP	WELL PUMP
WPO	CIRCULAR WOOD POST; DIAMETER AS SHOWN
4"X4"WPO	SQUARE WOOD POST; SIZE AS SHOWN
W	WATER LINE; DIAMETER AS SHOWN
WV	WATER VALVE
	ASPHALT PAVEMENT
	CONCRETE BLOCK WALL
	BUILDING
	CONCRETE
	DETECTABLE WARNINGS
	DG OR GRAVEL
	CHAIN LINK FENCE
	CHAIN LINK ROLL GATE
	EDGE OF ASPHALT PAVEMENT
	WOOD FENCE
	DIRECTION OF FLOW
E	UNDERGROUND ELECTRIC
G 8"	GAS LINE; SIZE AS NOTED
OT	OVERHEAD TELEPHONE
SD 18"	STORM DRAIN LINE; SIZE AS NOTED
S 12"	SEWER LINE; SIZE AS NOTED
T	UNDERGROUND TELEPHONE
W 8"	WATER LINE; SIZE AS NOTED
AG 12"	AGRICULTURAL IRRIGATION LINE; SIZE AS NOTED
A 1"	AIR LINE; SIZE AS NOTED
C	COMMUNICATION LINE
350	MAJOR GRADE CONTOUR LINE
345	MINOR GRADE CONTOUR LINE
CW 2"	CHILLED WATER LINE; SIZE AS NOTED
CWR 2"	CHILLED WATER RETURN LINE; SIZE AS NOTED
CWS 2"	CHILLED WATER SUPPLY LINE; SIZE AS NOTED
	LIMIT OF DIRT
	LIMIT OF TURF
DL 2"	DRAIN LINE; SIZE AS NOTED
EMS	EMERGENCY MANAGEMENT SYSTEM
FA	FIRE ALARM LINE
F 8"	FIRE LINE; SIZE AS NOTED
FO	FIBER OPTIC LINE
	DRAIN TUBE
HW 2"	HOT WATER LINE; SIZE AS NOTED
HWR 2"	HOT WATER RETURN LINE; SIZE AS NOTED
HWS 2"	HOT WATER SUPPLY LINE; SIZE AS NOTED
HYD	HYDRAULIC LINE
ID 18"	IRRIGATION DISTRICT; SIZE AS NOTED
	IRON FENCE
IRR 2"	IRRIGATION MAIN LINE; SIZE AS NOTED
L 1"	IRRIGATION LATERAL LINE; SIZE AS NOTED
ITS	INTELLIGENT TRAFFIC SYSTEM
JT	JOINTLY TRENCHED UTILITIES
OC	OVERHEAD COMMUNICATIONS LINE
OE	OVERHEAD ELECTRIC LINE
OEC	OVERHEAD ELECTRIC AND COMMUNICATION LINE
OET	OVERHEAD ELECTRIC AND TELEPHONE LINE
OETV	OVERHEAD ELECTRIC AND TELEVISION LINE
OETVT	OVERHEAD ELECTRIC, TELEVISION AND TELEPHONE LINE
OTS	OVERHEAD TRAFFIC SIGNAL LINE
OTV	OVERHEAD TELEVISION LINE
OU	OVERHEAD UTILITY LINE
P 6"	PETROLEUM LINE; SIZE AS NOTED
RW 3"	RECYCLED WATER IRRIGATION LINE; SIZE AS NOTED
S&SD 8"	SEWER AND STORM DRAIN LINE; SIZE AS NOTED
SFM 6"	SEWER FORCE MAIN; SIZE AS NOTED
ST 2"	STEAM LINE; SIZE AS NOTED
TFO	TRAFFIC FIBER OPTIC LINE
TS	TRAFFIC SIGNAL LINE
TV	TELEVISION LINE
UNK	UNKNOWN UTILITY LINE
X X	WIRE FENCE
	PROPERTY LINE
	CITY LIMIT
	EASEMENT 1
	EASEMENT 2
	RIGHT-OF-WAY LINE
	RIGHT-OF-WAY CENTER LINE
	SETBACK LINE

SURVEY NOTES:

1. *THIS TOPOGRAPHIC SURVEY LOCATES SPECIFIC PHYSICAL FEATURES OF THE SITE AND THEIR ELEVATION AS DETERMINED NECESSARY BY THE PROJECT ENGINEER. IT IS NOT A COMPLETE TOPOGRAPHIC SURVEY OF THE SITE. THE INFORMATION SHOWN REFLECTS THE DATA OBTAINED BY FIELD SURVEY CONDUCTED ON NOVEMBER 23, 2021.*
2. *UTILITY INFORMATION SHOWN HEREON IS BASED ON RECORD INFORMATION SUPPLIED TO THE ENGINEER BY UTILITY COMPANIES, PUBLIC AGENCIES AND THE PROPERTY OWNER, TOGETHER WITH OBSERVATION OF VISIBLE EVIDENCE BY A FIELD SURVEY. THE ENGINEER CAN MAKE NO GUARANTEE AS TO THE ACCURACY OR COMPLETENESS OF THE UNDERGROUND UTILITY FACILITIES SHOWN. PRIOR TO ANY SITE EXCAVATIONS, THE CONTRACTOR SHALL CONTACT THE OWNER AND UNDERGROUND SERVICE ALERT (USA) AND REQUEST THAT THEY IDENTIFY THE LOCATION OF ALL UNDERGROUND UTILITIES AT THE SITE.*

BENCHMARK:

CITY BENCHMARK #48, FOUND BRASS CAP CENTERED ON THE TOP OF THE HEADWALL AT THE NORTHWEST CORNER OF MOONEY BOULEVARD AND BARDSLEY AVENUE.

ELEV.= 289.048 (CITY DATUM)

SITE BENCHMARKS:

SBM #1: CHISELED 'X' IN THE CONCRETE, LOCATED APPROXIMATELY 135' NORTHEAST OF THE SOUTHEAST CORNER OF CENTRAL PLANT BUILDING.

ELEV.= 300.21 (CITY DATUM)

SBM #2: CHISELED 'X' ON TOP OF CURB LOCATED APPROXIMATELY 436' SOUTHWEST OF THE SOUTHEAST CORNER OF BUILDING 'C'.

ELEV. 298.19 (CITY DATUM)

FOR BID ONLY

Teter, LLP expressly reserves its common law copyright and other property rights in these plans, ideas and designs. Incorporated herein, as an instrument of professional service, is the prohibition of the use of these plans, ideas and designs in whole or in part, for any other project without the prior written authorization.

MARK	DATE	DESCRIPTION
	11/1/2022	DSA BACKCHECK

REGISTERED PROFESSIONAL ENGINEER LANE R. BAILEY No. 47103 CIVIL STATE OF CALIFORNIA

11/1/2022
Date Signed:

TETER, LLP
FRESNO HEADQUARTERS
VISALIA | BAKERSFIELD | MODESTO | SAN LUIS OBISPO
ARCHITECTS ENGINEERS CONNECTED

TETER

TULARE CAMPUS CTE
COLLEGE OF THE SEQUOIAS
4999 E. BARDSLEY AVE.
TULARE, CA

DRAWING TITLE
TOPOGRAPHIC SURVEY LEGEND AND NOTES

PROJECT NO.
20-12032

DRAWING
C100

Blair, Church & Flynn
CONSULTING ENGINEERS
400 Clovis Avenue, Suite 200
Clovis, California 93612
Tel (559) 326-1400
Fax (559) 326-1200

Drawing: P:\221-0340\Site\productiondrawings\221340_ts01.dwg, C100
Plot by: rsinagal, Oct 28, 2022 - 4:21pm

PLOT DATE: 10/28/2022 4:21:03 PM

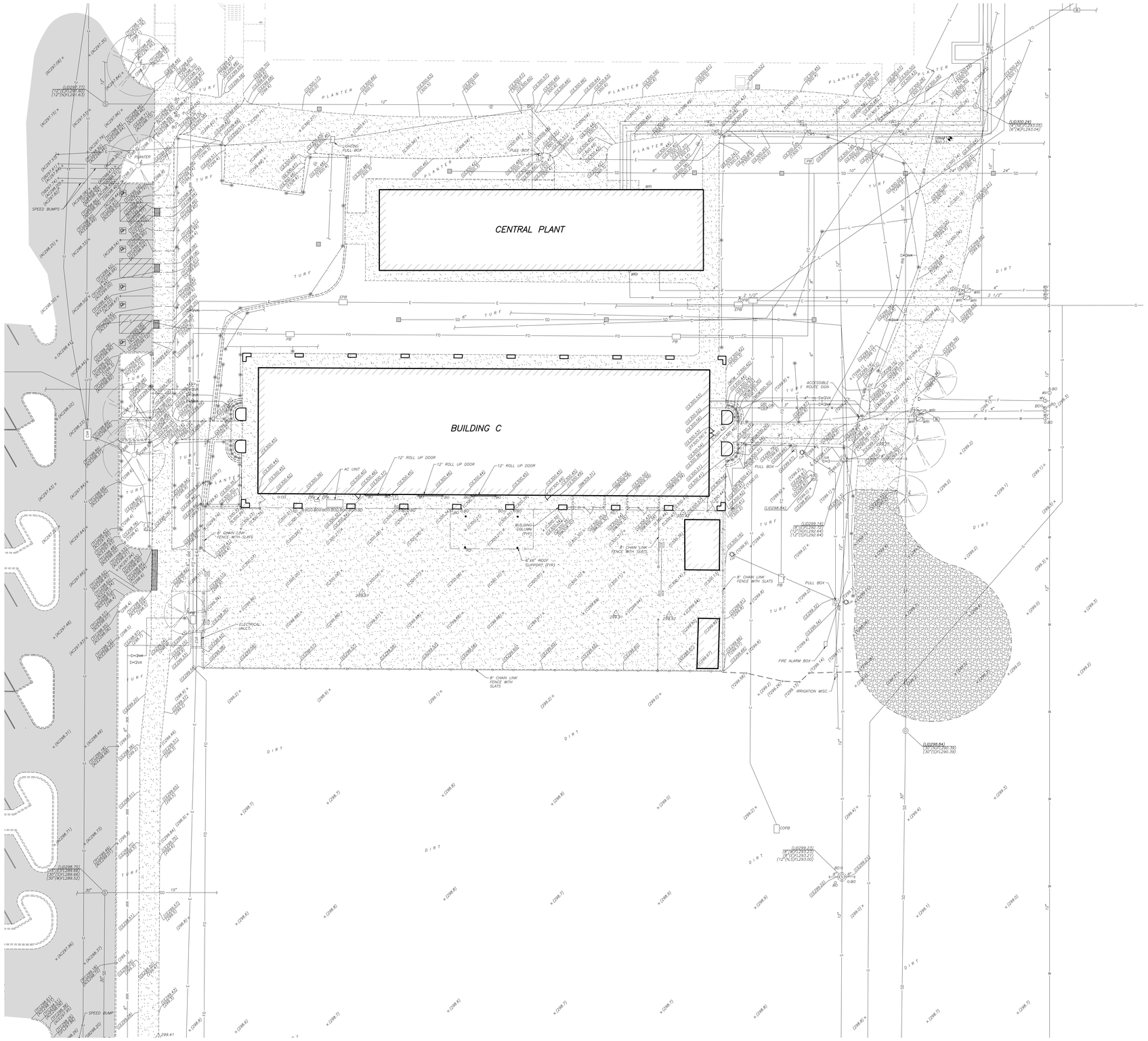

SEE SHEET C102

SURVEY NOTES:

1. THIS TOPOGRAPHIC SURVEY LOCATES SPECIFIC PHYSICAL FEATURES OF THE SITE AND THEIR ELEVATION AS DETERMINED NECESSARY BY THE PROJECT ENGINEER. IT IS NOT A COMPLETE TOPOGRAPHIC SURVEY OF THE SITE. THE INFORMATION SHOWN REFLECTS THE DATA OBTAINED BY FIELD SURVEY CONDUCTED ON NOVEMBER 23, 2021.
2. UTILITY INFORMATION SHOWN HEREON IS BASED ON RECORD INFORMATION SUPPLIED TO THE ENGINEER BY UTILITY COMPANIES, PUBLIC AGENCIES AND THE PROPERTY OWNER, TOGETHER WITH OBSERVATION OF VISIBLE EVIDENCE BY A FIELD SURVEY. THE ENGINEER CAN MAKE NO GUARANTEE AS TO THE ACCURACY OR COMPLETENESS OF THE UNDERGROUND UTILITY FACILITIES SHOWN. PRIOR TO ANY SITE EXCAVATIONS, THE CONTRACTOR SHALL CONTACT THE OWNER AND UNDERGROUND SERVICE ALERT (USA) AND REQUEST THAT THEY IDENTIFY THE LOCATION OF ALL UNDERGROUND UTILITIES AT THE SITE.

BENCHMARK:

CITY BENCHMARK #48, FOUND BRASS CAP CENTERED ON THE TOP OF THE HEADWALL AT THE NORTHWEST CORNER OF MOONEY BOULEVARD AND BARDSLEY AVENUE.

ELEV.= 289.048 (CITY DATUM)

SITE BENCHMARKS:

SBM #1: CHISELED 'X' IN THE CONCRETE, LOCATED APPROXIMATELY 135' NORTHEAST OF THE SOUTHEAST CORNER OF CENTRAL PLANT BUILDING.

ELEV.= 300.21 (CITY DATUM)

SBM #2: CHISELED 'X' ON TOP OF CURB LOCATED APPROXIMATELY 436' SOUTHWEST OF THE SOUTHEAST CORNER OF BUILDING 'C'.

ELEV. 298.19 (CITY DATUM)

SCALE: N 1"=20'

0 5 20 40
SCALE IN FEET

Blair, Church & Flynn
CONSULTING ENGINEERS
451 Clovis Avenue, Suite 200
Clovis, California 93612
Tel (559) 326-1400
Fax (559) 326-1500

FOR BID ONLY

Tetter, LLP expressly reserves his common law copyright and other property rights in these plans. This document, the ideas and designs incorporated herein, as an instrument of professional service, is not to be used in whole or in part, for any other project without prior written authorization.

MARK	DATE	DESCRIPTION
	11/1/2022	DSA BACKCHECK

REGISTERED PROFESSIONAL ENGINEER
LANE R. BADER
No. 47033
CIVIL
STATE OF CALIFORNIA
11/1/2022
Date Signed:

TETER, LLP
FRESNO HEADQUARTERS
VISALIA I BAKERSFIELD I MODESTO I SAN LUIS OBISPO
ARCHITECTS ENGINEERS CONNECTED

TULARE CAMPUS CTE
COLLEGE OF THE SEQUOIAS
4999 E. BARDSLEY AVE.
TULARE, CA

DRAWING TITLE
PARTIAL TOPOGRAPHIC SURVEY

PROJECT NO.
20-12032

DRAWING
C101

Drawing: P:\221-0340\Site\productiondrawings\221340_ts01.dwg
Plot by: dalvarez Nov 02, 2022 - 12:12pm

P:\221-0340\Site\productiondrawings\221340_ts01.dwg

PLOT DATE: 11/2/2022 12:11:16 PM

P:\221-0340\Site\productiondrawings\221340_ts01.dwg

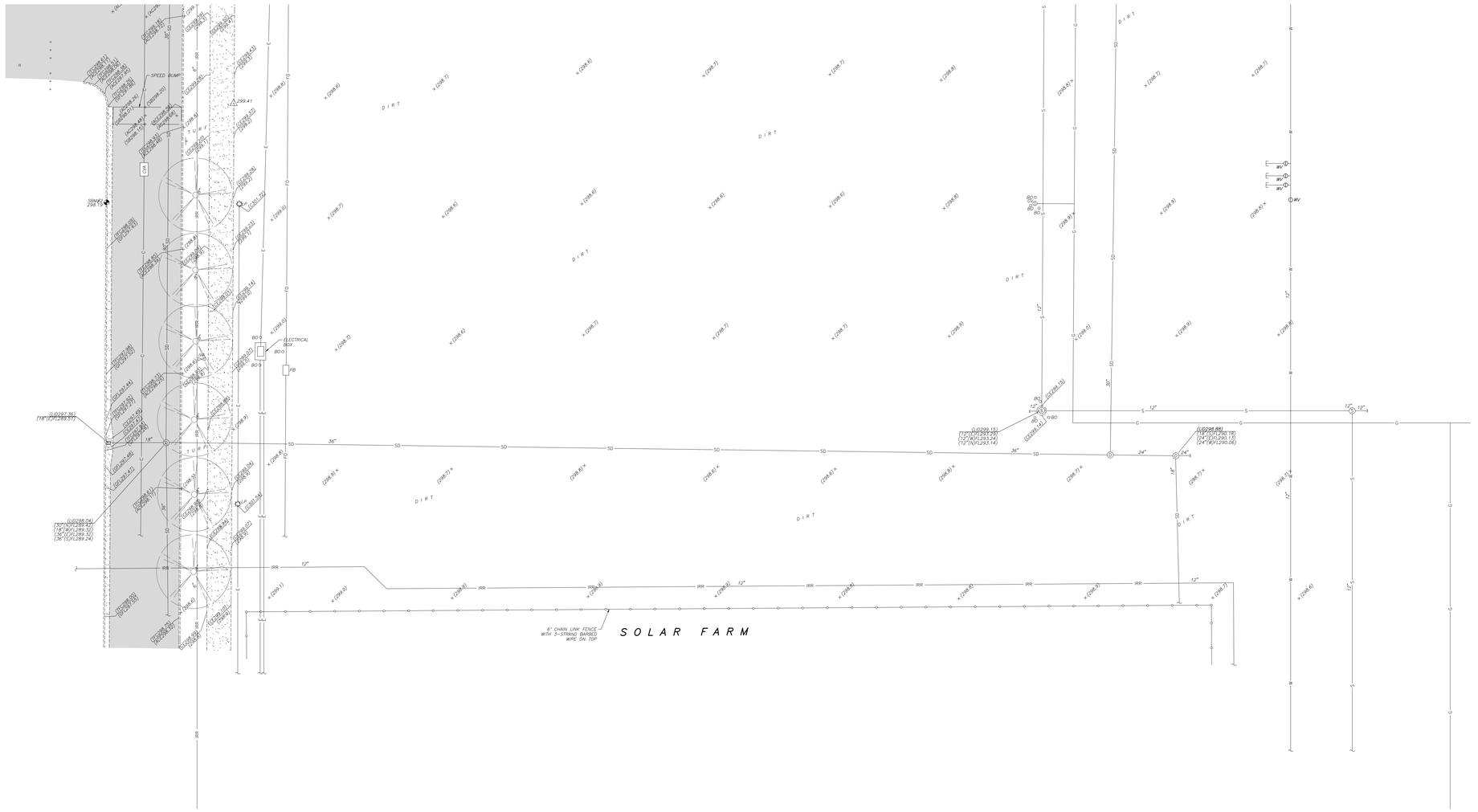

SURVEY NOTES:

1. THIS TOPOGRAPHIC SURVEY LOCATES SPECIFIC PHYSICAL FEATURES OF THE SITE AND THEIR ELEVATION AS DETERMINED NECESSARY BY THE PROJECT ENGINEER. IT IS NOT A COMPLETE TOPOGRAPHIC SURVEY OF THE SITE. THE INFORMATION SHOWN REFLECTS THE DATA OBTAINED BY FIELD SURVEY CONDUCTED ON NOVEMBER 23, 2021.
2. UTILITY INFORMATION SHOWN HEREON IS BASED ON RECORD INFORMATION SUPPLIED TO THE ENGINEER BY UTILITY COMPANIES, PUBLIC AGENCIES AND THE PROPERTY OWNER, TOGETHER WITH OBSERVATION OF VISIBLE EVIDENCE BY A FIELD SURVEY. THE ENGINEER CAN MAKE NO GUARANTEE AS TO THE ACCURACY OR COMPLETENESS OF THE UNDERGROUND UTILITY FACILITIES SHOWN. PRIOR TO ANY SITE EXCAVATIONS, THE CONTRACTOR SHALL CONTACT THE OWNER AND UNDERGROUND SERVICE ALERT (USA) AND REQUEST THAT THEY IDENTIFY THE LOCATION OF ALL UNDERGROUND UTILITIES AT THE SITE.

BENCHMARK:

CITY BENCHMARK #48, FOUND BRASS CAP CENTERED ON THE TOP OF THE HEADWALL AT THE NORTHWEST CORNER OF MOONEY BOULEVARD AND BARDSLEY AVENUE.

ELEV.= 289.048 (CITY DATUM)

SITE BENCHMARKS:

SBM #1: CHISELED 'X' IN THE CONCRETE, LOCATED APPROXIMATELY 135' NORTHEAST OF THE SOUTHEAST CORNER OF CENTRAL PLANT BUILDING.

ELEV.= 300.21 (CITY DATUM)

SBM #2: CHISELED 'X' ON TOP OF CURB LOCATED APPROXIMATELY 436' SOUTHWEST OF THE SOUTHEAST CORNER OF BUILDING 'C'.

ELEV. 298.19 (CITY DATUM)

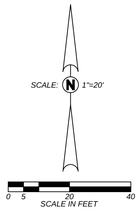

Blair, Church & Flynn
CONSULTING ENGINEERS
4551 Clovis Avenue, Suite 200
Clovis, California 93612
Tel (559) 326-1400
Fax (559) 326-1500

FOR BID ONLY

Tetter, LLP expressly reserves the common law copyright and other property rights in these plans, This document, the ideas and designs incorporated herein, as an instrument of professional service, is not to be used in whole or in part, for any other project without prior written authorization.

MARK	DATE	DESCRIPTION
	11/1/2022	DSA BACKCHECK

REGISTERED PROFESSIONAL ENGINEER
LANE R. BADER
No. 47033
CIVIL
STATE OF CALIFORNIA

11/1/2022
Date Signed:

TETER, LLP
FRESNO HEADQUARTERS
VISALIA | BAKERSFIELD | MODESTO | SAN LUIS OBISPO
ARCHITECTS ENGINEERS CONNECTED

TETER

TULARE CAMPUS CTE
COLLEGE OF THE SEQUOIAS
4999 E. BARDSLEY AVE.
TULARE, CA

DRAWING TITLE
PARTIAL TOPOGRAPHIC SURVEY

PROJECT NO.
20-12032

DRAWING
C102

Drawing: P:\221-0340\Site\productiondrawings\221340_ts01.dwg C102 ----
Plot by: lalarent Nov 02, 2022 12:11pm

PLOT DATE: 11/2/2022 12:11:21 PM

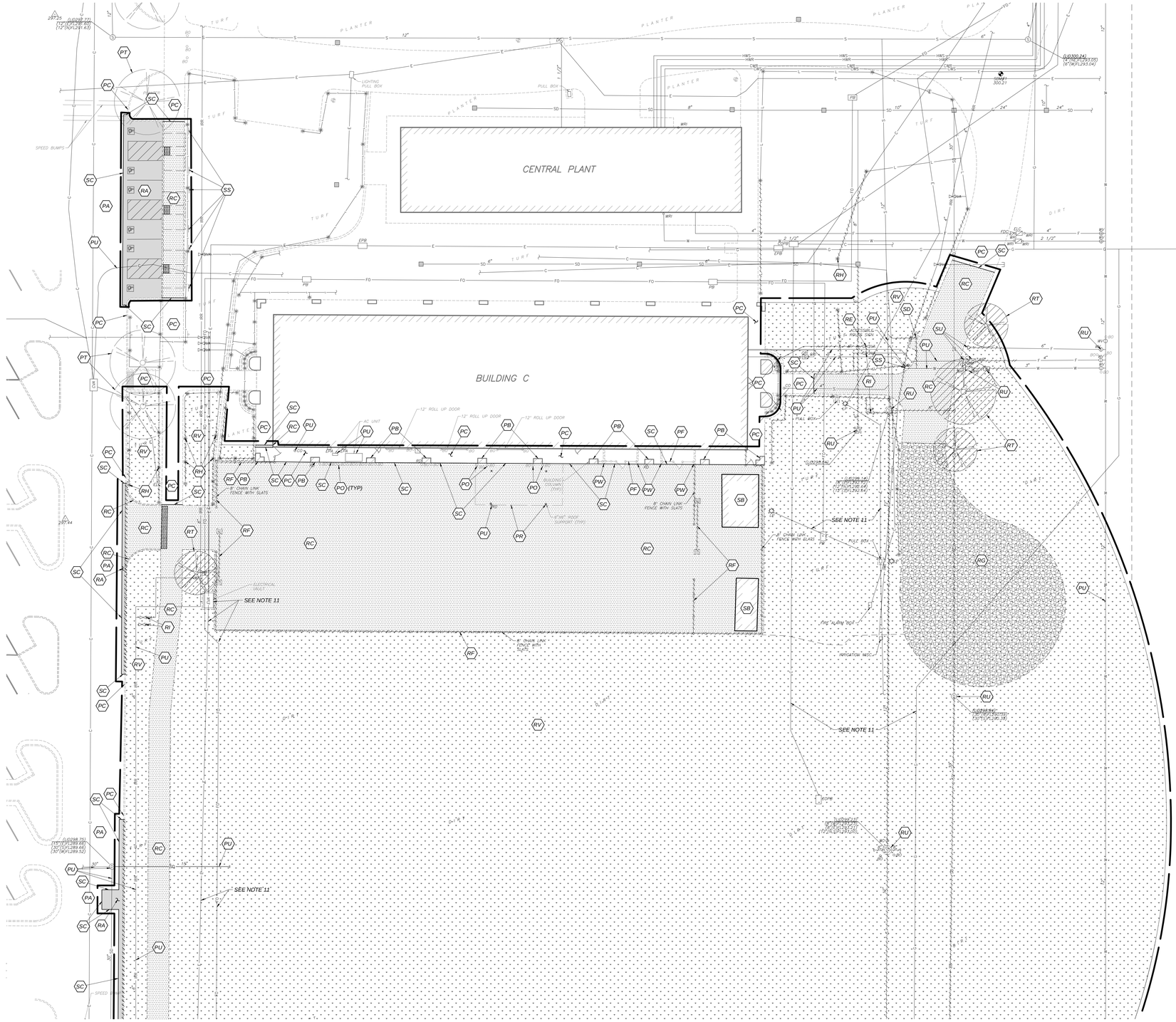
CENTRAL PLANT
BUILDING C
SEE NOTE 11
SEE NOTE 11
SEE NOTE 11
SEE NOTE 11
SEE NOTE 11
12' ROLL UP DOOR
12' ROLL UP DOOR
12' ROLL UP DOOR
8' CHAIN LINK FENCE WITH SLATS
8' CHAIN LINK FENCE WITH SLATS
8' CHAIN LINK FENCE WITH SLATS
8' CHAIN LINK FENCE WITH 45A/G
6' CHAIN LINK FENCE WITH SLATS
SPEED BUMPS
SPEED BUMPS
TURF
PLANTER
DIRT
AC UNIT
FIRE ALARM TEST
IRRIGATION MTR.
FIRE ALARM TEST
IRRIGATION MTR.
FIRE ALARM TEST
IRRIGATION MTR.
LIGHTING PULL BOX
PULL BOX
PULL BOX
PULL BOX
PULL BOX
PULL BOX
EPB
EPB
EPB
EPB
FB
FB
FB
FB
FB
FB
FB
FO
FO
FO

P:\221-0340\Site\productiondrawings\221340_de01.dwg

SEE SHEET C201

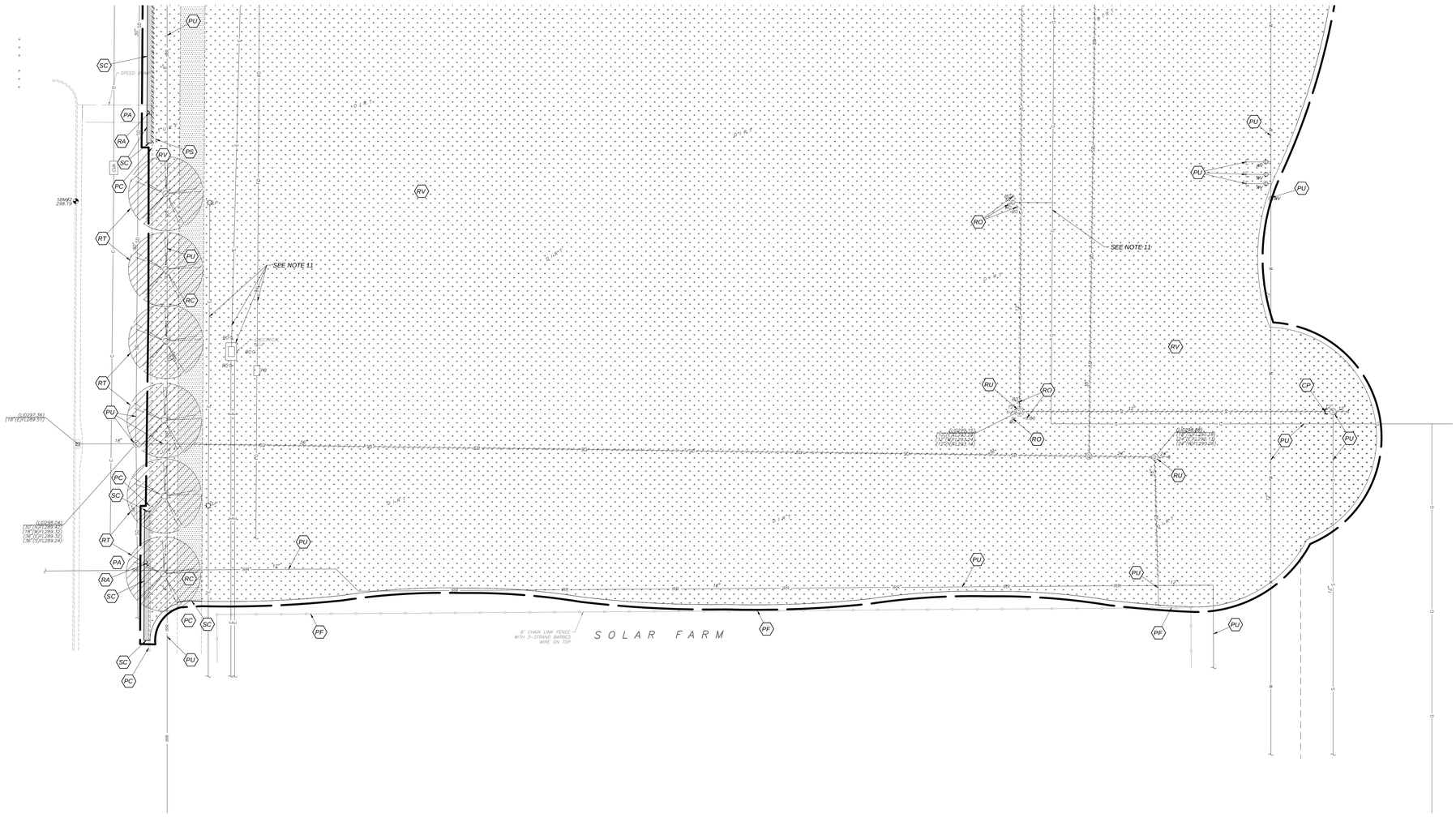

DEMOLITION LEGEND:

- *REMOVE EXISTING IMPROVEMENTS AS NECESSARY TO CONSTRUCT NEW IMPROVEMENTS SHOWN ON THESE PLANS UNLESS OTHERWISE NOTED. THE REMOVAL OF IMPROVEMENTS MUST BE COORDINATED WITH ALL PLAN SHEETS. CONTRACTOR MUST ALSO COORDINATE REMOVAL OF IMPROVEMENTS WITH UTILITY AGENCIES. PROTECT ALL IMPROVEMENTS NOT DESIGNATED FOR REMOVAL. SEE NOTE 1*
- *LIMITS OF VEGETATION REMOVAL*
- *LIMITS OF CONCRETE IMPROVEMENT REMOVAL*
- *LIMITS OF ASPHALTIC CONCRETE IMPROVEMENT REMOVAL*
- *LIMITS OF GRAVEL REMOVAL*
- CP — *PLACE WATERTIGHT CAP ON EXISTING SEWER LINE 6" OUTSIDE MANHOLE.*
- PA — *PROTECT ASPHALT CONCRETE PAVEMENT TO REMAIN*
- PB — *PROTECT BUILDING TO REMAIN*
- PC — *PROTECT CONCRETE IMPROVEMENTS TO REMAIN*
- PF — *PROTECT FENCE TO REMAIN*
- PO — *PROTECT BOLLARD TO REMAIN*
- PR — *PROTECT ROOF OVERHANG AND COLUMNS*
- PS — *PROTECT SIGN TO REMAIN*
- PT — *PROTECT TREE AND ROOTS TO REMAIN*
- PU — *PROTECT UTILITY TO REMAIN*
- PW — *PROTECT CMU WALL TO REMAIN*
- RA — *REMOVE AND LAWFULLY DISPOSE OF ASPHALT CONCRETE PAVEMENT STRUCTURAL SECTION*
- RC — *REMOVE AND LAWFULLY DISPOSE OF CONCRETE IMPROVEMENTS*
- RE — *SALVAGE AND RELOCATE EXISTING REMOTE CONTROL VALVE, SEE SHEET L101*
- RF — *SALVAGE CHAIN LINK FENCE FABRIC WITH SLATS, POST, GATES, AND HARDWARE.*
- RG — *REMOVE AND LAWFULLY DISPOSE OF GRAVEL*
- RH — *SALVAGE AND RELOCATE SPRINKLER HEAD, SEE IRRIGATION PLAN - SHEET L101*
- RI — *SALVAGE EXISTING REMOTE CONTROL VALVE AND RETURN TO OWNER*
- RO — *REMOVE AND LAWFULLY DISPOSE OF PIPE BOLLARDS AND FOOTINGS*
- RT — *REMOVE AND LAWFULLY DISPOSE OF TREE AND ROOTS*
- RU — *REMOVE AND LAWFULLY DISPOSE OF UTILITY*
- RV — *REMOVE VEGETATION TO A MINIMUM DEPTH OF 4"*
- SC — *SAWCUT*
- SB — *SALVAGE METAL STORAGE BUILDING, SEE SITE PLAN FOR NEW LOCATION*
- SD — *REMOVE AND SALVAGE DRINKING FOUNTAIN, RETURN TO OWNER.*
- SS — *SALVAGE SIGN AND POST FOR RELOCATION, SEE SITE PLAN*
- SU — *SALVAGE UTILITY, SEE UTILITY PLAN FOR NEW LOCATION*
- *REMOVE TREE*
- *LIMIT OF CHAIN LINK FENCE REMOVAL*
- *LIMIT OF FIRE LINE REMOVAL*
- *LIMIT OF IRRIGATION MAIN LINE REMOVAL*
- *LIMIT OF STORM DRAIN LINE REMOVAL*
- *LIMIT OF SEWER LINE REMOVAL*
- *LIMIT OF WATER LINE REMOVAL*
- *LIMIT OF STRIPING REMOVAL*
- *LIMIT OF IRRIGATION LATERAL LINE REMOVAL*
- *CONSTRUCT 8" THICK BRICK AND MORTAR PLUG*

GENERAL DEMOLITION NOTES:

1. *THE "LIMIT OF DEMOLITION" SHOWN IS APPROXIMATE AND IS GENERALLY CONSIDERED TO BE THE MINIMUM REMOVAL REQUIREMENTS. CONTRACTOR MUST COORDINATE AS NOTED IN THE LEGEND.*
2. *CONTRACTOR SHALL LEGALLY DISPOSE OF ALL DEMOLISHED MATERIALS OFF SITE.*
3. *CONTRACTOR SHALL PROTECT ALL EXISTING UTILITY IMPROVEMENTS NOT SPECIFICALLY DESIGNATED FOR REMOVAL.*
4. *THE ON-SITE UNDERGROUND UTILITIES SHOWN ON THIS SHEET ARE AT APPROXIMATE LOCATIONS. THE EXTENT, LOCATIONS AND SIZES ARE UNKNOWN. THE CONTRACTOR SHALL POTHOLE TO LOCATE AND VERIFY THE UNDERGROUND UTILITY LINES PRIOR TO REMOVAL.*
5. *CONTRACTOR TO PROTECT AND PRESERVE IN PLACE ANY FOUND SURVEY MONUMENTS. ANY MONUMENTS DISTURBED SHALL BE RESET BY A CALIFORNIA LICENSED SURVEYOR AND THE APPROPRIATE PAPERWORK FILED WITH THE CITY OR COUNTY, AT CONTRACTOR'S EXPENSE.*
6. *ALL HAZARDOUS MATERIALS ENCOUNTERED DURING SITE DEMOLITION SHALL BE REMEDIATED AND DISPOSED OF PER STATE AND EPA REQUIREMENTS.*
7. *CONTRACTOR SHALL CONTACT AND COORDINATE WITH ALL UTILITY AGENCIES PRIOR TO THE START OF ANY DEMOLITION OR CONSTRUCTION.*
8. *ANY EXISTING UTILITIES AND/OR IMPROVEMENTS WHICH ARE TO REMAIN, THAT BECOME DAMAGED DURING CONSTRUCTION SHALL BE COMPLETELY RESTORED TO THE SATISFACTION OF THE OWNER AND AGENCY HAVING AUTHORITY, AT THE CONTRACTOR'S SOLE EXPENSE.*
9. *REMOVE EXISTING IMPROVEMENTS AS NECESSARY TO CONSTRUCT NEW IMPROVEMENTS SHOWN ON THESE PLANS.*
   a) *FOR CONCRETE REMOVAL, REMOVE TO THE NEXT NEAREST TOOLED JOINT OR EXPANSION JOINT OF IMPROVEMENTS DESIGNATED TO REMAIN.*
   b) *FOR ASPHALTIC PAVEMENT REMOVAL, SAWCUT TO A STRAIGHT, CLEAN EDGE AT LOCATIONS INDICATED ON THE PLANS.*
10. *REMOVE TREE TO MINIMUM DEPTH OF 3' OR TO BOTTOM OF ROOTBALL, WHICHEVER IS DEEPER.*
11. *REFER TO MECHANICAL, ELECTRICAL, PLUMBING, AND ARCHITECTURAL PLANS FOR ADDITIONAL DEMOLITION AND COORDINATION.*
12. *NO DEMOLITION SHALL BEGIN UNTIL PLANS INCLUDING THE DEMOLITION WORK HAVE BEEN APPROVED BY DSA.*

SCALE: N 1"=20'

0 5 20 40
SCALE IN FEET

Know what's below. Call before you dig.

Blair, Church & Flynn
CONSULTING ENGINEERS
450 Clovis Avenue, Suite 200
Clovis, California 93612
Tel (559) 326-1400
Fax (559) 326-1300

FOR BID ONLY

These plans, I&P reports and specifications are instruments of service and shall remain the property of Teter, LLP whether the project for which they are made is executed or not. The reuse of these documents on any other project without written authorization from Teter, LLP is prohibited and is subject to appropriate legal action.

MARK	DATE	DESCRIPTION
	11/1/2022	DSA BACKCHECK

REGISTERED PROFESSIONAL ENGINEER — CLAYTE R. BAILEY — No. 47103 — STATE OF CALIFORNIA — CIVIL

11/1/2022
Date Signed:

TETER, LLP
FRESNO HEADQUARTERS
VISALIA | BAKERSFIELD | MODESTO | SAN LUIS OBISPO
ARCHITECTS ENGINEERS CONNECTED

TULARE CAMPUS CTE
COLLEGE OF THE SEQUOIAS
4999 E. BARDSLEY AVE.
TULARE, CA

DRAWING TITLE
PARTIAL DEMOLITION PLAN

PROJECT NO.
20-12032

DRAWING
C202

Drawing: P:\221-0340\Site\productiondrawings\221340_de01.dwg, Cmd: MOR
Plot by: tsinanni Nov 02, 2022 - 12:11pm

PLOT DATE: 11/2/2022 12:11:47 PM

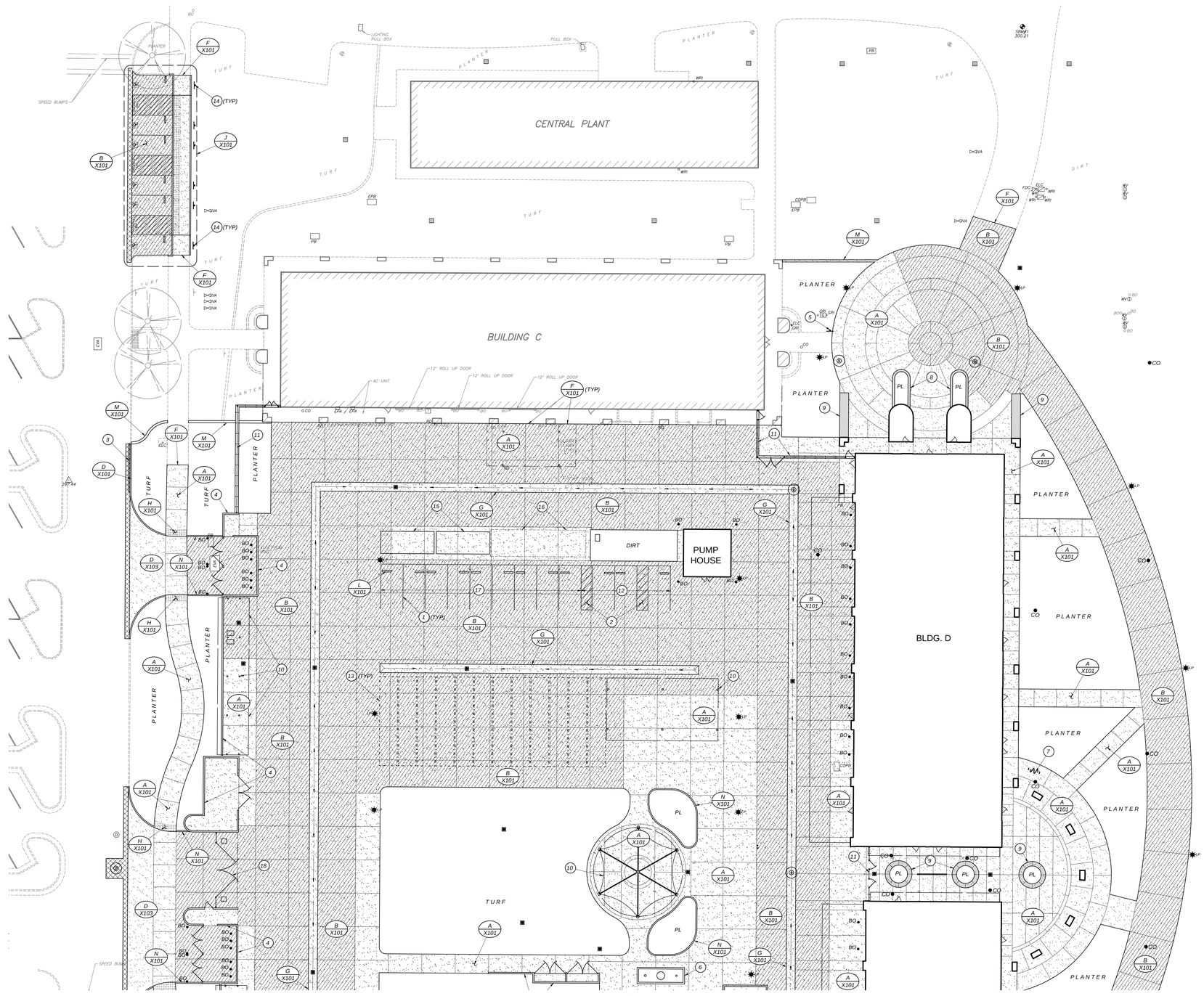

SEE SHEET C302

SITE LEGEND:

- LIMITS OF CONCRETE IMPROVEMENTS
- LIMITS OF HEAVY DUTY CONCRETE PAVEMENT STRUCTURAL SECTION PER DETAIL [B/X101]
- LIMITS OF ASPHALT PLUG IMPROVEMENTS PER [E/X101]
- DETECTABLE WARNINGS PER DETAIL [H/X101]
- LIMITS OF PAINTED CURB
- •BO — BOLLARD, SEE ARCHITECTURAL PLAN
- PL — PLANTER
- SITE LIGHTING, SEE ELECTRICAL PLANS
- 1 — PAINT 4" WIDE WHITE LINE
- 2 — PAINT 4" WIDE WHITE DIAGONAL LINES AT 3' ON-CENTER
- 3 — PAINT TOP AND FACE OF CURB RED WITH 4" HIGH WHITE LETTERING, "NO PARKING - FIRE LANE", AT 30' ON CENTER. WHERE NO CURB EXISTS, PAINT ASPHALT
- 4 — TRASH AND STORAGE ENCLOSURES AND CMU WALL, SEE ARCHITECTURAL PLANS
- 5 — SALVAGED ACCESSIBLE ROUTE SIGN AND POST, FOOTING PER DETAIL [I/X101]
- 6 — OLDCASTLE SECTIONAL VAULT MODEL 620-LA-10 PER DETAIL [C/X103]. SEE PLUMBING PLAN FOR PUMP AND APPURTENANCES.
- 7 — BIKE RACK, SEE ARCHITECTURAL PLAN
- 8 — PLANTER WALL, SEE ARCHITECTURAL PLAN
- 9 — CONCRETE BENCH, SEE ARCHITECTURAL PLAN
- 10 — SHADE STRUCTURE, SEE ARCHITECTURAL PLAN
- 11 — DECORATIVE STEEL FENCE AND GATES, SEE ARCHITECTURAL PLAN
- 12 — ELECTRIC VEHICULAR STORAGE AREA
- 13 — 40' SEATRAIN STORAGE CONTAINERS FURNISHED AND INSTALLED BY OWNER. INSTALL AND INSPECT PER DSA IR A-27.
- 14 — SALVAGED ACCESSIBLE PARKING SIGN AND POST, FOOTING PER DETAIL [I/X101]
- 15 — SALVAGED SHED, SEE ARCHITECTURAL PLAN
- 16 — FUTURE SHED, FURNISHED AND INSTALLED BY OWNER
- 17 — VEHICULAR STORAGE AREA
- 18 — ENTRANCE GATE, SEE ARCHITECTURAL PLAN

GENERAL SITE NOTES:

1. ALL CONCRETE MOWSTRIPS, RAMPS AND SIDEWALKS SHALL HAVE WEAKENED PLANE JOINTS AT 10 FEET MAXIMUM ON CENTER AND EXPANSION JOINTS AT 30 FEET MAXIMUM ON CENTER PER DETAIL [A/X101]
2. INSTALL DOWELED CONNECTION AT JOINT OF NEW CONCRETE TO EXISTING CONCRETE PER DETAIL [F/X101]
3. NO CONCRETE MAY BE POURED UNTIL THE FORMS HAVE BEEN REVIEWED AND APPROVED BY THE PROJECT INSPECTOR.
4. ALL BURIED METALLIC OBJECTS SHALL HAVE A PROTECTIVE COATING OR BE WRAPPED WITH APPROVED PROTECTIVE WRAP.
5. ADJUST EXISTING SPRINKLER HEADS AND LATERAL LINES AS REQUIRED BY NEW IMPROVEMENTS, OR AS SHOWN ON THE IRRIGATION PLANS.

SCALE: N 1"=20'

0 5 20 40
SCALE IN FEET

811 Know what's below. Call before you dig.

Blair, Church & Flynn
CONSULTING ENGINEERS
451 Clovis Avenue, Suite 200
Clovis, California 93612
Tel (559) 326-1400
Fax (559) 326-1500

FOR BID ONLY

Teter, LLP expressly reserves his common law copyright and other property rights in these plans. This document, the ideas and designs incorporated herein, as an instrument of professional service, is not to be used in whole or in part, for any other project without prior written authorization.

MARK	DATE	DESCRIPTION
	11/1/2022	DSA BACKCHECK

REGISTERED PROFESSIONAL ENGINEER LANE R. BADER No. 47033 CIVIL STATE OF CALIFORNIA
11/1/2022
Date Signed:

TETER, LLP
FRESNO HEADQUARTERS
VISALIA | BAKERSFIELD | MODESTO | SAN LUIS OBISPO
ARCHITECTS ENGINEERS CONNECTED

TULARE CAMPUS CTE
COLLEGE OF THE SEQUOIAS
4999 E. BARDSLEY AVE.
TULARE, CA

DRAWING TITLE
PARTIAL SITE PLAN

PROJECT NO.
20-12032

DRAWING
C301

P:\221-0340\Site\productiondrawings\221340_si01.dwg

PLOT DATE: 11/2/2022 12:12:50 PM

P:\221-0340\Site\productiondrawings\221340_si01.dwg

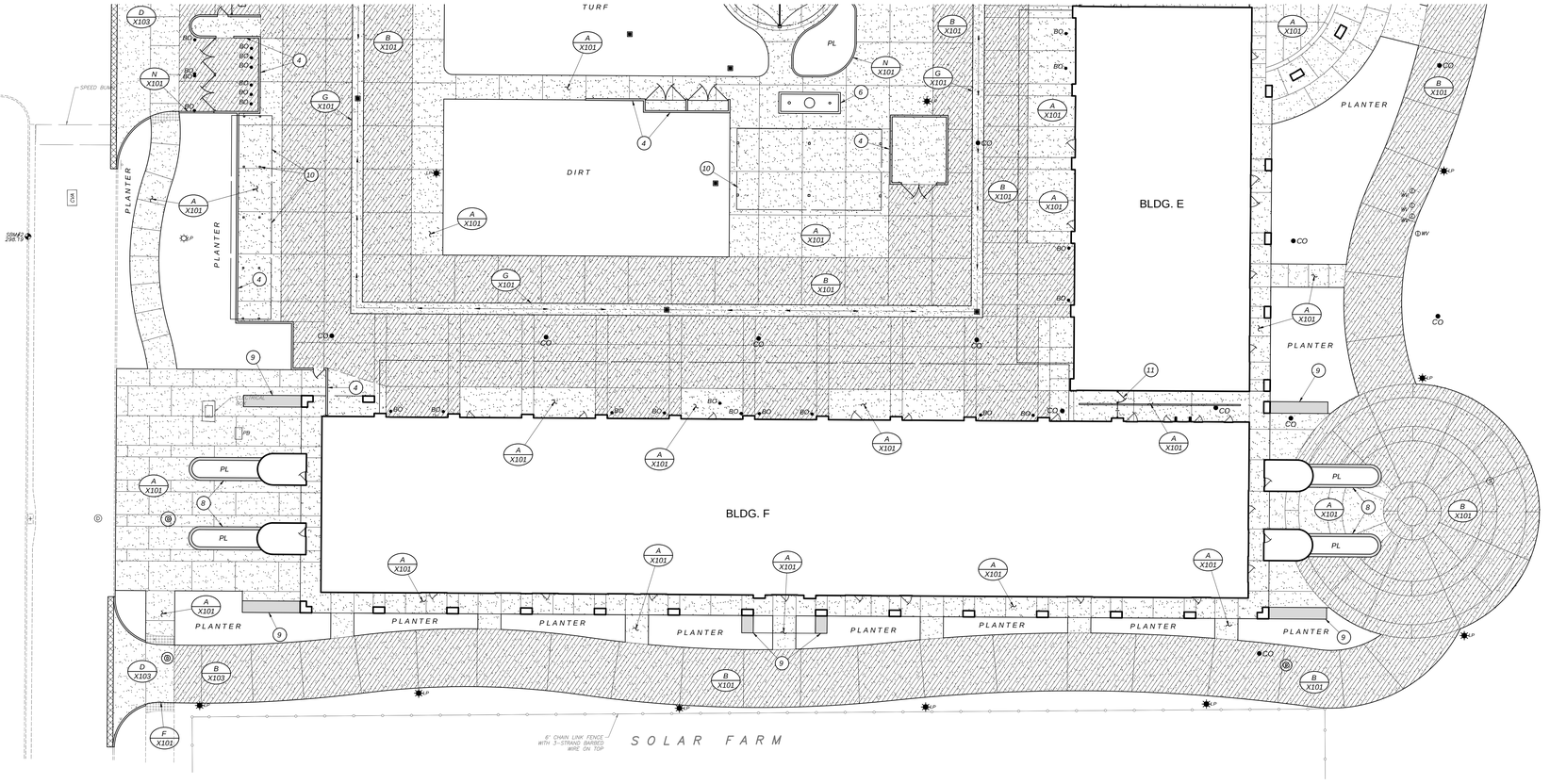

SITE LEGEND:

- LIMITS OF CONCRETE IMPROVEMENTS
- LIMITS OF HEAVY DUTY CONCRETE PAVEMENT STRUCTURAL SECTION PER DETAIL [B/X101]
- LIMITS OF ASPHALT PLUG IMPROVEMENTS PER [E/X101]
- DETECTABLE WARNINGS PER DETAIL [H/X101]
- LIMITS OF PAINTED CURB
- BO — BOLLARD, SEE ARCHITECTURAL PLAN
- PL — PLANTER
- LP — SITE LIGHTING, SEE ELECTRICAL PLANS
- 1 — PAINT 4" WIDE WHITE LINE
- 2 — PAINT 4" WIDE WHITE DIAGONAL LINES AT 3' ON-CENTER
- 3 — PAINT TOP AND FACE OF CURB RED WITH 4" HIGH WHITE LETTERING, "NO PARKING - FIRE LANE", AT 30' ON CENTER. WHERE NO CURB EXISTS, PAINT ASPHALT
- 4 — TRASH AND STORAGE ENCLOSURES AND CMU WALL, SEE ARCHITECTURAL PLANS
- 5 — SALVAGED ACCESSIBLE ROUTE SIGN AND POST, FOOTING PER DETAIL [I/X101]
- 6 — OLDCASTLE SECTIONAL VAULT MODEL 620-LA-10 PER DETAIL [C/X103]. SEE PLUMBING PLAN FOR PUMP AND APPURTENANCES.
- 7 — BIKE RACK, SEE ARCHITECTURAL PLAN
- 8 — PLANTER WALL, SEE ARCHITECTURAL PLAN
- 9 — CONCRETE BENCH, SEE ARCHITECTURAL PLAN
- 10 — SHADE STRUCTURE, SEE ARCHITECTURAL PLAN
- 11 — DECORATIVE STEEL FENCE AND GATES, SEE ARCHITECTURAL PLAN
- 12 — ELECTRIC VEHICULAR STORAGE AREA
- 13 — 40' SEATRAIN STORAGE CONTAINERS FURNISHED AND INSTALLED BY OWNER. INSTALL AND INSPECT PER DSA IR A-27.
- 14 — SALVAGED ACCESSIBLE PARKING SIGN AND POST, FOOTING PER DETAIL [I/X101]
- 15 — SALVAGED SHED, SEE ARCHITECTURAL PLAN
- 16 — FUTURE SHED, FURNISHED AND INSTALLED BY OWNER
- 17 — VEHICULAR STORAGE AREA
- 18 — ENTRANCE GATE, SEE ARCHITECTURAL PLAN

GENERAL SITE NOTES:

1. ALL CONCRETE MOWSTRIPS, RAMPS AND SIDEWALKS SHALL HAVE WEAKENED PLANE JOINTS AT 10 FEET MAXIMUM ON CENTER AND EXPANSION JOINTS AT 30 FEET MAXIMUM ON CENTER PER DETAIL [A/X101]
2. INSTALL DOWELED CONNECTION AT JOINT OF NEW CONCRETE TO EXISTING CONCRETE PER DETAIL [F/X101]
3. NO CONCRETE MAY BE POURED UNTIL THE FORMS HAVE BEEN REVIEWED AND APPROVED BY THE PROJECT INSPECTOR.
4. ALL BURIED METALLIC OBJECTS SHALL HAVE A PROTECTIVE COATING OR BE WRAPPED WITH APPROVED PROTECTIVE WRAP.
5. ADJUST EXISTING SPRINKLER HEADS AND LATERAL LINES AS REQUIRED BY NEW IMPROVEMENTS, OR AS SHOWN ON THE IRRIGATION PLANS.

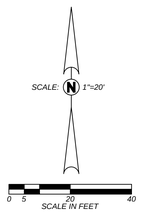

811 Know what's below. Call before you dig.

Blair, Church & Flynn
CONSULTING ENGINEERS
451 Clovis Avenue, Suite 200
Clovis, California 93612
Tel (559) 326-1400
Fax (559) 326-1500

FOR BID ONLY

Teter, LLP expressly reserves this common law copyright and other property rights in these plans. This document, the ideas and designs incorporated herein, as an instrument of professional service, is not to be used in whole or in part, for any other project without prior written authorization.

MARK	DATE	DESCRIPTION
	11/1/2022	DSA BACKCHECK

REGISTERED PROFESSIONAL ENGINEER LANE R. BADER No. 47,033 CIVIL STATE OF CALIFORNIA
11/1/2022
Date Signed:

TETER, LLP
FRESNO HEADQUARTERS
VISALIA | BAKERSFIELD | MODESTO | SAN LUIS OBISPO
ARCHITECTS ENGINEERS CONNECTED

TULARE CAMPUS CTE
COLLEGE OF THE SEQUOIAS
4999 E. BARDSLEY AVE.
TULARE, CA

DRAWING TITLE
PARTIAL SITE PLAN

PROJECT NO.
20-12032

DRAWING
C302

Drawing: P:\221-0340\Site\productiondrawings\221340_si01.dwg C302 - BCF.dwg
Plot by: Salvador Nov 02, 2022 - 12:13pm

PLOT DATE: 11/2/2022 12:13:01 PM

P:\221-0340\Site\productiondrawings\221340_hc01.dwg

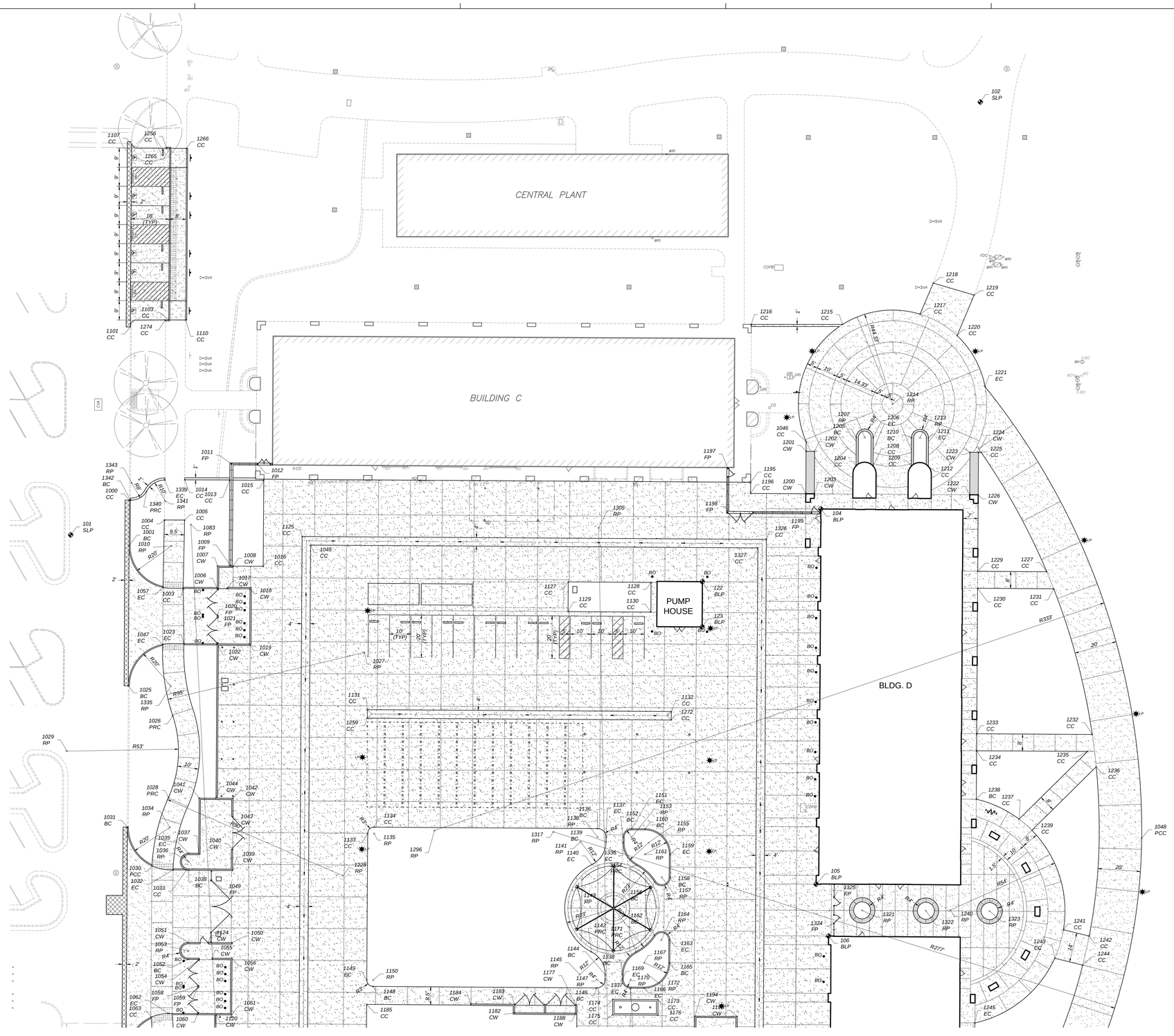

HORIZONTAL CONTROL LEGEND:

1000 LCP	LAYOUT COORDINATE POINT
100 SLP	SITE LAYOUT POINT
100 BLP	BUILDING LAYOUT POINT
AC	CORNER ASPHALT
BC	BEGIN CURVE
CC	CONCRETE CORNER
CW	CORNER OF WALL
EC	END CURVE
FP	FENCE POST
PCC	POINT OF COMPOUND CURVE
PRC	POINT OF REVERSE CURVE
RP	RADIUS POINT

GENERAL HORIZONTAL CONTROL NOTES:

1. *SITE LAYOUT POINT 100 IS A CHISELED 'X' ON TOP OF CURB LOCATED APPROXIMATELY 318' SOUTH OF THE SOUTHWEST CORNER OF BUILDING C. SITE LAYOUT POINT 101 IS A NAIL AND TIN IN THE PAVEMENT LOCATED APPROXIMATELY 101' WEST- SOUTHWEST OF THE SOUTHWEST CORNER OF BUILDING C. SITE LAYOUT POINT 102 IS A CHISELED 'X' IN THE SIDEWALK LOCATED 161' NORTHEAST OF THE NORTHEAST CORNER OF BUILDING C.*
2. *DIMENSIONS AND POINTS ARE TO CENTER OF FENCE POSTS, FACE OF BUILDINGS, TOP FACE OF CURB, OR EDGE OF CONCRETE; UNLESS SHOWN OTHERWISE.*

SCALE: N 1"=20'

0 5 20 40
SCALE IN FEET

FOR BID ONLY

Blair, Church & Flynn, LLP expressly reserves its common law copyright and other property rights in these plans, specifications and designs. Use of these plans, specifications and designs, in whole or in part, for any other project without the written authorization of Blair, Church & Flynn, LLP is prohibited.

MARK	DATE	DESCRIPTION
	11/1/2022	DSA BACKCHECK

REGISTERED PROFESSIONAL ENGINEER
CLAYE R. BARTLEY
No. 51703
STATE OF CALIFORNIA
CIVIL

11/1/2022
Date Signed:

TETER, LLP
FRESNO HEADQUARTERS
VISALIA | BAKERSFIELD | MODESTO | SAN LUIS OBISPO
ARCHITECTS ENGINEERS CONNECTED

TETER

TULARE CAMPUS CTE
COLLEGE OF THE SEQUOIAS
4999 E. BARDSLEY AVE.
TULARE, CA

DRAWING TITLE
PARTIAL HORIZONTAL CONTROL PLAN

PROJECT NO.
20-12032

DRAWING
C401

Know what's below. Call before you dig.
811

Blair, Church & Flynn
CONSULTING ENGINEERS
4801 Clovis Avenue, Suite 200
Clovis, California 93612
Tel (559) 326-1400
Fax (559) 326-1500

Drawing: P:\221-0340\Site\productiondrawings\221340_hc01.dwg Last Saved By: Salvador Nov 02, 2022 - 12:13pm
Plot By: Salvador

PLOT DATE: 11/2/2022 12:13:45 PM

P:\221-0340\Site\productiondrawings\221340_hc01.dwg

SEE SHEET C401

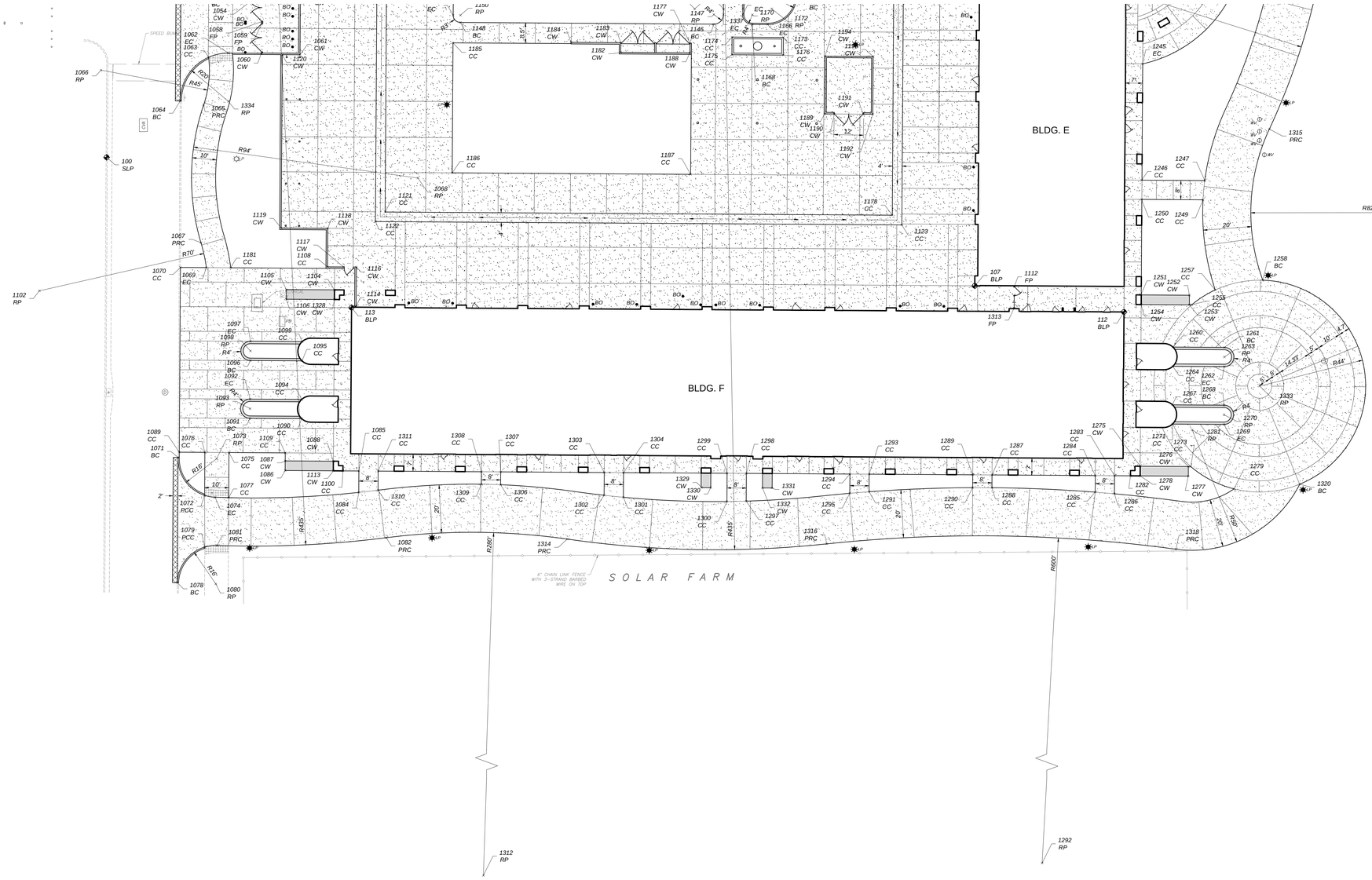

HORIZONTAL CONTROL LEGEND:

1000 LCP	LAYOUT COORDINATE POINT
100 SLP	SITE LAYOUT POINT
100 BLP	BUILDING LAYOUT POINT
AC	CORNER ASPHALT
BC	BEGIN CURVE
CC	CONCRETE CORNER
CW	CORNER OF WALL
EC	END CURVE
FP	FENCE POST
PCC	POINT OF COMPOUND CURVE
PRC	POINT OF REVERSE CURVE
RP	RADIUS POINT

GENERAL HORIZONTAL CONTROL NOTES:

1. *SITE LAYOUT POINT 100 IS A CHISELED 'X' ON TOP OF CURB LOCATED APPROXIMATELY 318' SOUTH OF THE SOUTHWEST CORNER OF BUILDING C. SITE LAYOUT POINT 101 IS A NAIL AND TIN IN THE PAVEMENT LOCATED APPROXIMATELY 101' WEST- SOUTHWEST OF THE SOUTHWEST CORNER OF BUILDING C. SITE LAYOUT POINT 102 IS A CHISELED 'X' IN THE SIDEWALK LOCATED 161' NORTHEAST OF THE NORTHEAST CORNER OF BUILDING C.*
2. *DIMENSIONS AND POINTS ARE TO CENTER OF FENCE POSTS, FACE OF BUILDINGS, TOP FACE OF CURB, OR EDGE OF CONCRETE, UNLESS SHOWN OTHERWISE.*

SCALE: N 1"=20'

0 5 20 40
SCALE IN FEET

811 Know what's below. Call before you dig.

Blair, Church & Flynn CONSULTING ENGINEERS
451 Clovis Avenue, Suite 200
Clovis, California 93612
Tel (559) 326-1400
Fax (559) 326-1200

PLOT DATE: 11/2/2022 12:13:53 PM

FOR BID ONLY

Basic L&D copyright reserve its common law copyright and other property rights in these plans, ideas and designs. No reproduction, use or disclosure of this plan, or any part, for any other project without the written authorization of Basic L&D is prohibited.

MARK	DATE	DESCRIPTION
1	11/1/2022	DSA BACKCHECK

REGISTERED PROFESSIONAL ENGINEER CLAIRE R. BARNES No. 41003 CIVIL STATE OF CALIFORNIA

11/1/2022
Date Signed:

TETER, LLP
FRESNO HEADQUARTERS
VISALIA | BAKERSFIELD | MODESTO | SAN LUIS OBISPO
ARCHITECTS ENGINEERS CONNECTED

TETER

TULARE CAMPUS CTE
COLLEGE OF THE SEQUOIAS
4999 E. BARDSLEY AVE.
TULARE, CA

DRAWING TITLE
PARTIAL HORIZONTAL CONTROL PLAN

PROJECT NO.
20-12032

DRAWING
C402

Drawing: P:\221-0340\Site\productiondrawings\221340_hc01.dwg, 11/2/2022 12:13:53 PM, Plot by: bshankle

P:\221-0340\Site\productiondrawings\221340_hc01.dwg

NORTHING EASTING TABLE

POINT	NORTHING	EASTING	ABV	DESCRIPTION
100	1953775.88	6478122.14	SLP	SITE LAYOUT POINT
101	1954044.52	6478126.61	SLP	SITE LAYOUT POINT
102	1954248.35	6478554.88	SLP	SITE LAYOUT POINT
104	1954056.72	6478479.80	BLP	BUILDING LAYOUT POINT
105	1953880.05	6478477.57	BLP	BUILDING LAYOUT POINT
106	1953855.64	6478483.42	BLP	BUILDING LAYOUT POINT
107	1953722.52	6478482.59	BLP	BUILDING LAYOUT POINT
112	1953711.64	6478544.53	BLP	BUILDING LAYOUT POINT
113	1953713.45	6478223.81	BLP	BUILDING LAYOUT POINT
122	1954022.51	6478424.03	BLP	BUILDING LAYOUT POINT
123	1954001.18	6478423.89	BLP	BUILDING LAYOUT POINT
1000	1954060.91	6478154.24	CC	CORNER CONCRETE
1001	1954039.50	6478154.10	BC	BEGIN CURVE
1003	1954019.34	6478179.56	CC	CORNER CONCRETE
1004	1954051.56	6478170.70	CC	CORNER CONCRETE
1005	1954051.50	6478180.26	CC	CORNER CONCRETE
1006	1954019.24	6478195.68	CW	CORNER OF WALL
1007	1954029.87	6478195.75	CW	CORNER OF WALL
1008	1954029.83	6478203.08	CW	CORNER OF WALL
1009	1954029.83	6478201.98	FP	FENCE POST
1010	1954039.37	6478174.10	RP	RADIUS POINT
1011	1954077.95	6478202.28	FP	FENCE POST
1012	1954077.87	6478214.64	FP	FENCE POST
1013	1954070.34	6478201.49	CC	CORNER CONCRETE
1014	1954070.39	6478180.30	CC	CORNER CONCRETE
1015	1954070.24	6478217.51	CC	CORNER CONCRETE
1016	1954029.74	6478217.26	CC	CORNER CONCRETE
1017	1954019.21	6478200.32	CW	CORNER OF WALL
1018	1954019.14	6478211.05	CW	CORNER OF WALL
1019	1953993.11	6478210.88	CW	CORNER OF WALL
1020	1954006.55	6478195.65	FP	FENCE POST
1021	1954005.55	6478195.65	FP	FENCE POST
1022	1953993.21	6478195.52	CW	CORNER OF WALL
1023	1953993.30	6478179.94	EC	END CURVE
1025	1953973.44	6478153.76	BC	BEGIN CURVE
1026	1953959.34	6478174.67	PRC	POINT OF REVERSE CURVE
1027	1953989.19	6478264.86	RP	RADIUS POINT
1028	1953920.95	6478172.69	PRC	POINT OF REVERSE CURVE
1029	1953942.79	6478124.76	RP	RADIUS POINT
1030	1953888.66	6478164.89	PCC	POINT OF COMPOUND CURVE
1031	1953906.96	6478153.29	BC	BEGIN CURVE
1032	1953886.80	6478174.82	EC	END CURVE
1033	1953886.76	6478181.15	CC	CORNER CONCRETE
1034	1953906.81	6478173.29	RP	RADIUS POINT
1035	1953894.62	6478182.06	EC	END CURVE
1036	1953890.62	6478182.21	RP	RADIUS POINT
1037	1953894.59	6478186.90	CW	CORNER OF WALL
1038	1953886.62	6478182.18	BC	BEGIN CURVE
1039	1953886.49	6478202.82	CW	CORNER OF WALL
1040	1953896.49	6478202.88	CW	CORNER OF WALL
1041	1953920.59	6478187.06	CW	CORNER OF WALL
1042	1953920.49	6478203.06	CW	CORNER OF WALL
1043	1953911.82	6478203.00	CW	CORNER OF WALL
1044	1953920.54	6478195.06	CW	CORNER OF WALL
1045	1954039.75	6478239.55	CC	CORNER CONCRETE
1046	1954088.47	6478472.86	CC	CORNER CONCRETE
1047	1953992.97	6478169.93	EC	END CURVE
1048	1953901.73	6478630.85	PCC	POINT OF COMPOUND CURVE
1049	1953881.81	6478192.80	FP	FENCE POST
1050	1953852.49	6478202.63	CW	CORNER OF WALL
1051	1953852.62	6478181.96	CW	CORNER OF WALL
1052	1953844.62	6478181.91	BC	BEGIN CURVE
1053	1953848.62	6478181.94	RP	RADIUS POINT
1054	1953844.59	6478187.08	CW	CORNER OF WALL
1055	1953845.19	6478193.26	CW	CORNER OF WALL
1056	1953845.13	6478202.58	CW	CORNER OF WALL
1057	1954019.78	6478170.08	EC	END CURVE
1058	1953832.26	6478186.50	FP	FENCE POST
1059	1953831.26	6478186.50	FP	FENCE POST
1060	1953819.23	6478186.42	CW	CORNER OF WALL
1061	1953818.49	6478202.42	CW	CORNER OF WALL
1062	1953819.18	6478172.68	EC	END CURVE
1063	1953817.42	6478164.48	CC	CORNER CONCRETE
1064	1953799.30	6478152.67	BC	BEGIN CURVE
1065	1953797.58	6478162.40	PRC	POINT OF REVERSE CURVE
1066	1953812.09	6478119.80	RP	RADIUS POINT
1067	1953740.42	6478161.30	PRC	POINT OF REVERSE CURVE
1068	1953767.28	6478251.38	RP	RADIUS POINT
1069	1953730.08	6478163.54	EC	END CURVE
1070	1953730.15	6478152.77	CC	CORNER CONCRETE
1071	1953651.22	6478151.78	BC	BEGIN CURVE
1072	1953635.47	6478162.81	PCC	POINT OF COMPOUND CURVE
1073	1953650.68	6478167.78	RP	RADIUS POINT
1074	1953634.69	6478167.16	EC	END CURVE
1075	1953653.27	6478172.92	CC	CORNER CONCRETE
1076	1953653.33	6478162.92	CC	CORNER CONCRETE
1077	1953634.51	6478172.80	CC	CORNER CONCRETE
1078	1953599.22	6478151.48	BC	BEGIN CURVE
1079	1953613.99	6478162.90	PCC	POINT OF COMPOUND CURVE
1080	1953598.66	6478167.48	RP	RADIUS POINT
1081	1953614.65	6478168.04	PRC	POINT OF REVERSE CURVE
1082	1953617.88	6478238.23	PRC	POINT OF REVERSE CURVE
1083	1954049.38	6478183.21	RP	RADIUS POINT
1084	1953636.68	6478226.82	CC	CORNER CONCRETE
1085	1953645.60	6478226.87	CC	CORNER CONCRETE
1086	1953645.79	6478196.25	CW	CORNER OF WALL
1087	1953649.79	6478196.27	CW	CORNER OF WALL
1088	1953649.66	6478216.27	CW	CORNER OF WALL
1089	1953653.40	6478152.29	CC	CORNER CONCRETE
1090	1953667.33	6478203.10	CC	CORNER CONCRETE
1091	1953667.46	6478181.67	BC	BEGIN CURVE
1092	1953675.46	6478181.72	EC	END CURVE
1093	1953671.46	6478181.69	RP	RADIUS POINT
1094	1953675.33	6478203.15	CC	CORNER CONCRETE
1095	1953691.33	6478203.25	CC	CORNER CONCRETE
1096	1953691.46	6478181.82	BC	BEGIN CURVE
1097	1953699.46	6478181.87	EC	END CURVE
1098	1953695.46	6478181.84	RP	RADIUS POINT
1099	1953699.33	6478203.30	CC	CORNER CONCRETE
1100	1953645.64	6478220.25	CC	CORNER CONCRETE
1101	1954142.44	6478154.72	CC	CORNER CONCRETE
1102	1953720.42	6478094.21	RP	RADIUS POINT
1103	1954145.77	6478172.74	CC	CORNER CONCRETE
1104	1953720.83	6478216.72	CW	CORNER OF WALL
1105	1953720.95	6478196.72	CW	CORNER OF WALL
1106	1953716.95	6478196.69	CW	CORNER OF WALL
1107	1954228.49	6478155.29	CC	CORNER CONCRETE
1108	1953730.39	6478213.83	CC	CORNER CONCRETE
1109	1953653.12	6478196.29	CC	CORNER CONCRETE
1110	1954145.72	6478180.75	CC	CORNER CONCRETE
1112	1953722.27	6478499.01	FP	FENCE POST
1113	1953645.66	6478216.25	CW	CORNER OF WALL
1114	1953714.02	6478225.73	CW	CORNER OF WALL
1115	1953413.71	6479452.08	CW	CORNER OF WALL
1116	1953730.31	6478225.83	CW	CORNER OF WALL
1117	1953730.35	6478220.50	CW	CORNER OF WALL
1118	1953746.39	6478213.93	CW	CORNER OF WALL
1119	1953746.51	6478194.60	CW	CORNER OF WALL
1120	1953818.54	6478195.05	CW	CORNER OF WALL
1121	1953753.17	6478237.76	CC	CORNER CONCRETE
1122	1953749.19	6478233.73	CC	CORNER CONCRETE
1123	1953747.82	6478452.31	CC	CORNER CONCRETE
1124	1953852.56	6478191.30	CW	CORNER OF WALL
1125	1954043.77	6478235.58	CC	CORNER CONCRETE
1127	1954022.41	6478360.86	CC	CORNER CONCRETE
1128	1954022.16	6478399.86	CC	CORNER CONCRETE
1129	1954008.41	6478360.77	CC	CORNER CONCRETE
1130	1954008.16	6478399.77	CC	CORNER CONCRETE
1131	1953962.25	6478266.31	CC	CORNER CONCRETE
1132	1953961.35	6478409.38	CC	CORNER CONCRETE
1133	1953903.94	6478266.45	CC	CORNER CONCRETE
1134	1953906.92	6478269.47	CC	CORNER CONCRETE
1135	1953903.92	6478269.45	RP	RADIUS POINT
1136	1953906.25	6478374.70	BC	BEGIN CURVE
1137	1953902.22	6478378.68	EC	END CURVE
1138	1953902.25	6478374.68	RP	RADIUS POINT
1139	1953899.96	6478378.66	BC	BEGIN CURVE
1140	1953889.28	6478371.99	EC	END CURVE
1141	1953900.03	6478366.66	RP	RADIUS POINT
1142	1953848.20	6478371.74	PRC	POINT OF REVERSE CURVE
1143	1953868.68	6478382.21	RP	RADIUS POINT
1144	1953837.44	6478378.27	BC	BEGIN CURVE
1145	1953837.52	6478366.27	RP	RADIUS POINT
1146	1953831.20	6478374.23	BC	BEGIN CURVE
1147	1953835.20	6478374.26	RP	RADIUS POINT
1148	1953831.92	6478269.00	BC	BEGIN CURVE
1149	1953834.94	6478266.02	EC	END CURVE
1150	1953834.92	6478269.02	RP	RADIUS POINT
1151	1953906.15	6478390.70	EC	END CURVE
1152	1953902.17	6478386.68	BC	BEGIN CURVE
1153	1953902.15	6478390.68	RP	RADIUS POINT
1154	1953888.98	6478393.02	PRC	POINT OF REVERSE CURVE
1155	1953899.57	6478398.66	RP	RADIUS POINT
1156	1953881.16	6478401.53	BC	BEGIN CURVE
1157	1953883.33	6478404.89	RP	RADIUS POINT
1158	1953883.30	6478408.89	BC	BEGIN CURVE
1159	1953894.03	6478408.96	EC	END CURVE
1160	1953906.11	6478397.03	BC	BEGIN CURVE
1161	1953894.11	6478396.96	RP	RADIUS POINT
1162	1953855.96	6478401.37	BC	BEGIN CURVE
1163	1953853.72	6478408.71	EC	END CURVE
1164	1953853.74	6478404.71	RP	RADIUS POINT
1165	1953842.99	6478408.64	BC	BEGIN CURVE
1166	1953831.06	6478396.56	EC	END CURVE
1167	1953843.06	6478396.64	RP	RADIUS POINT
1168	1953831.10	6478390.23	BC	BEGIN CURVE
1169	1953835.13	6478386.26	EC	END CURVE
1170	1953835.10	6478390.26	RP	RADIUS POINT
1171	1953848.24	6478392.77	PRC	POINT OF REVERSE CURVE
1172	1953837.58	6478398.27	RP	RADIUS POINT
1173	1953825.69	6478403.14	CC	CORNER CONCRETE
1174	1953825.82	6478381.80	CC	CORNER CONCRETE
1175	1953818.49	6478381.76	CC	CORNER CONCRETE
1176	1953818.36	6478403.09	CC	CORNER CONCRETE
1177	1953823.32	6478364.32	CW	CORNER OF WALL
1178	1953751.85	6478448.34	CC	CORNER CONCRETE
1181	1953730.01	6478173.64	CC	CORNER CONCRETE
1182	1953819.47	6478335.59	CW	CORNER OF WALL
1183	1953823.50	6478335.62	CW	CORNER OF WALL
1184	1953823.63	6478314.95	CW	CORNER OF WALL
1185	1953823.44	6478265.95	CC	CORNER CONCRETE
1186	1953769.44	6478265.61	CC	CORNER CONCRETE
1187	1953768.82	6478364.61	CC	CORNER CONCRETE
1188	1953819.29	6478364.29	CW	CORNER OF WALL
1189	1953793.92	6478420.26	CW	CORNER OF WALL
1190	1953793.89	6478424.26	CW	CORNER OF WALL
1191	1953793.82	6478436.26	CW	CORNER OF WALL
1192	1953793.79	6478440.26	CW	CORNER OF WALL
1193	1953817.79	6478440.41	CW	CORNER OF WALL
1194	1953817.91	6478420.41	CW	CORNER OF WALL
1195	1954069.31	6478446.74	CC	CORNER CONCRETE
1196	1954064.06	6478446.71	CC	CORNER CONCRETE
1197	1954075.87	6478436.03	FP	FENCE POST
1198	1954055.87	6478435.91	FP	FENCE POST
1199	1954055.63	6478479.41	FP	FENCE POST
1200	1954063.90	6478472.70	CW	CORNER OF WALL
1201	1954083.90	6478472.83	CW	CORNER OF WALL
1202	1954083.87	6478476.83	CW	CORNER OF WALL
1203	1954063.87	6478476.70	CW	CORNER OF WALL
1204	1954077.03	6478496.37	CC	CORNER CONCRETE
1205	1954090.42	6478496.45	BC	BEGIN CURVE
1206	1954090.37	6478504.45	EC	END CURVE
1207	1954090.39	6478500.45	RP	RADIUS POINT
1208	1954076.98	6478504.37	CC	CORNER CONCRETE
1209	1954076.87	6478522.37	CC	CORNER CONCRETE
1210	1954090.25	6478522.45	BC	BEGIN CURVE
1211	1954090.20	6478530.45	EC	END CURVE
1212	1954076.82	6478530.37	CC	CORNER CONCRETE
1213	1954090.23	6478526.45	RP	RADIUS POINT
1214	1954106.06	6478513.55	RP	RADIUS POINT
1215	1954143.65	6478490.04	CC	CORNER CONCRETE
1216	1954143.64	6478447.03	CC	CORNER CONCRETE
1217	1954148.46	6478526.50	CC	CORNER CONCRETE
1218	1954163.08	6478532.71	CC	CORNER CONCRETE
1219	1954157.45	6478551.96	CC	CORNER CONCRETE
1220	1954138.36	6478543.92	CC	CORNER CONCRETE
1221	1954114.29	6478557.11	EC	END CURVE
1222	1954063.42	6478549.87	CW	CORNER OF WALL
1223	1954083.41	6478550.00	CW	CORNER OF WALL
1224	1954083.39	6478554.00	CW	CORNER OF WALL
1225	1954083.38	6478555.27	CC	CORNER CONCRETE
1226	1954063.39	6478553.87	CW	CORNER OF WALL
1227	1954027.19	6478586.16	CC	CORNER CONCRETE
1228	1953884.04	6478254.77	RP	RADIUS POINT
1229	1954027.39	6478553.64	CC	CORNER CONCRETE
1230	1954019.39	6478553.59	CC	CORNER CONCRETE
1231	1954019.17	6478589.42	CC	CORNER CONCRETE
1232	1953950.55	6478607.58	CC	CORNER CONCRETE
1233	1953950.89	6478553.17	CC	CORNER CONCRETE
1234	1953942.89	6478553.12	CC	CORNER CONCRETE
1235	1953942.56	6478605.36	CC	CORNER CONCRETE
1236	1953935.33	6478609.42	CC	CORNER CONCRETE
1237	1953910.70	6478573.10	CC	CORNER CONCRETE
1238	1953920.06	6478552.97	BC	BEGIN CURVE
1239	1953905.43	6478579.14	CC	CORNER CONCRETE
1240	1953867.80	6478540.70	RP	RADIUS POINT
1241	1953858.61	6478594.01	CC	CORNER CONCRETE
1242	1953855.60	6478606.13	CC	CORNER CONCRETE
1243	1953845.19	6478589.93	CC	CORNER CONCRETE
1244	1953841.93	6478603.08	CC	CORNER CONCRETE
1245	1953814.69	6478552.18	EC	END CURVE
1246	1953766.40	6478551.87	CC	CORNER CONCRETE
1247	1953766.23	6478578.08	CC	CORNER CONCRETE
1248	1953752.96	6478679.22	RP	RADIUS POINT
1249	1953758.24	6478577.35	CC	CORNER CONCRETE
1250	1953758.40	6478551.82	CC	CORNER CONCRETE
1251	1953718.73	6478551.58	CW	CORNER OF WALL
1252	1953718.61	6478571.71	CW	CORNER OF WALL
1253	1953714.61	6478571.69	CW	CORNER OF WALL
1254	1953714.73	6478551.69	CW	CORNER OF WALL
1255	1953714.60	6478572.67	CC	CORNER CONCRETE
1256	1954226.56	6478171.74	CC	CORNER CONCRETE
1257	1953720.78	6478582.42	CC	CORNER CONCRETE
1258	1953724.83	6478602.19	BC	BEGIN CURVE
1259	1953958.25	6478266.29	CC	CORNER CONCRETE
1260	1953697.06	6478564.86	CC	CORNER CONCRETE
1261	1953696.93	6478586.24	BC	BEGIN CURVE
1262	1953688.93	6478586.19	EC	END CURVE
1263	1953692.93	6478586.22	RP	RADIUS POINT
1264	1953689.06	6478564.81	CC	CORNER CONCRETE
1265	1954226.56	6478173.27	CC	CORNER CONCRETE
1266	1954226.49	6478181.17	CC	CORNER CONCRETE
1267	1953673.15	6478564.61	CC	CORNER CONCRETE
1268	1953672.93	6478586.09	BC	BEGIN CURVE
1269	1953664.93	6478586.04	EC	END CURVE
1270	1953668.93	6478586.07	RP	RADIUS POINT
1271	1953665.06	6478564.65	CC	CORNER CONCRETE
1272	1953957.35	6478409.36	CC	CORNER CONCRETE
1273	1953647.43	6478572.26	CC	CORNER CONCRETE
1274	1954145.77	6478171.20	CC	CORNER CONCRETE
1275	1953647.57	6478551.27	CW	CORNER OF WALL
1276	1953647.44	6478571.27	CW	CORNER OF WALL
1277	1953643.44	6478571.24	CW	CORNER OF WALL
1278	1953643.56	6478551.25	CW	CORNER OF WALL
1279	1953638.16	6478590.22	CC	CORNER CONCRETE
1281	1953662.63	6478572.87	RP	RADIUS POINT
1282	1953643.59	6478547.24	CC	CORNER CONCRETE
1283	1953643.63	6478540.62	CC	CORNER CONCRETE
1284	1953643.68	6478532.62	CC	CORNER CONCRETE
1285	1953636.80	6478532.57	CC	CORNER CONCRETE
1286	1953636.13	6478540.57	CC	CORNER CONCRETE
1287	1953643.95	6478489.74	CC	CORNER CONCRETE
1288	1953638.65	6478489.71	CC	CORNER CONCRETE
1289	1953644.00	6478481.74	CC	CORNER CONCRETE
1290	1953638.66	6478481.71	CC	CORNER CONCRETE
1291	1953636.98	6478438.70	CC	CORNER CONCRETE
1292	1953018.67	6478484.50	RP	RADIUS POINT
1293	1953644.27	6478438.74	CC	CORNER CONCRETE
1294	1953644.32	6478430.74	CC	CORNER CONCRETE
1295	1953636.33	6478430.69	CC	CORNER CONCRETE
1296	1953905.30	6478297.86	RP	RADIUS POINT
1297	1953633.07	6478387.67	CC	CORNER CONCRETE
1298	1953644.59	6478387.74	CC	CORNER CONCRETE
1299	1953644.64	6478379.74	CC	CORNER CONCRETE
1300	1953632.90	6478379.67	CC	CORNER CONCRETE
1301	1953634.67	6478336.68	CC	CORNER CONCRETE
1302	1953635.49	6478328.69	CC	CORNER CONCRETE
1303	1953644.96	6478328.75	CC	CORNER CONCRETE
1304	1953644.91	6478336.75	CC	CORNER CONCRETE
1305	1954047.88	6478375.18	RP	RADIUS POINT
1306	1953639.88	6478285.71	CC	CORNER CONCRETE
1307	1953645.23	6478285.75	CC	CORNER CONCRETE
1308	1953645.28	6478277.75	CC	CORNER CONCRETE
1309	1953640.10	6478277.71	CC	CORNER CONCRETE
1310	1953637.61	6478234.82	CC	CORNER CONCRETE
1311	1953645.55	6478234.87	CC	CORNER CONCRETE
1312	1953340.13	6478273.65	RP	RADIUS POINT
1313	1953713.24	6478498.93	FP	FENCE POST
1314	1953617.29	6478313.41	PRC	POINT OF REVERSE CURVE
1315	1953787.61	6478604.90	PRC	POINT OF REVERSE CURVE
1316	1953615.31	6478421.13	PRC	POINT OF REVERSE CURVE
1317	1953904.70	6478353.86	RP	RADIUS POINT
1318	1953613.10	6478566.07	PRC	POINT OF REVERSE CURVE
1320	1953640.10	6478617.51	BC	BEGIN CURVE
1321	1953867.73	6478499.23	RP	RADIUS POINT
1322	1953867.54	6478529.24	RP	RADIUS POINT
1323	1953867.35	6478559.24	RP	RADIUS POINT
1324	1953861.69	6478485.95	FP	FENCE POST
1325	1953873.94	6478486.03	FP	FENCE POST
1326	1954042.40	6478454.15	CC	CORNER CONCRETE
1327	1954038.43	6478450.13	CC	CORNER CONCRETE
1328	1953716.83	6478216.69	CW	CORNER OF WALL
1329	1953638.76	6478369.20	CW	CORNER OF WALL
1330	1953638.68	6478372.96	CW	CORNER OF WALL
1331	1953638.52	6478398.46	CW	CORNER OF WALL
1332	1953638.55	6478394.46	CW	CORNER OF WALL
1333	1953680.85	6478600.89	RP	RADIUS POINT
1334	1953799.18	6478172.67	RP	RADIUS POINT
1335	1953973.34	6478173.76	RP	RADIUS POINT
1336	1953899.65	6478386.66	EC	END CURVE
1337	1953835.18	6478378.26	EC	END CURVE
1338	1953837.65	6478386.27	BC	BEGIN CURVE
1339	1954070.39	6478170.95	EC	END CURVE
1340	1954065.12	6478162.39	PRC	POINT OF REVERSE CURVE
1341	1954060.39	6478171.20	RP	RADIUS POINT
1342	1954060.91	6478154.74	BC	BEGIN CURVE
1343	1954068.91	6478155.34	RP	RADIUS POINT

FOR BID ONLY

These CAD files/data are instruments of service prepared by Teter, LLP and are copyrighted. All common law rights to copyright and other property rights to these files are reserved by Teter, LLP. Any use, modification, reproduction, publication or redistribution of these files without the prior written consent of Teter, LLP is prohibited. Any unauthorized use shall be at the user's sole risk and without liability to Teter, LLP and user shall indemnify and hold harmless Teter, LLP from all claims, damages, losses, expenses and attorney fees arising out of such use, modification, reproduction, publication or redistribution. These files are not to be used for any other purpose or on any other project without the prior express written authorization of Teter, LLP.

MARK	DATE	DESCRIPTION
	11/1/2022	DSA BACKCHECK

REGISTERED PROFESSIONAL ENGINEER
CLAIRE R. BARTLETT
No. 47103
CIVIL
STATE OF CALIFORNIA

11/1/2022
Date Signed:

TETER, LLP
FRESNO HEADQUARTERS
VISALIA | BAKERSFIELD | MODESTO | SAN LUIS OBISPO
ARCHITECTS ENGINEERS CONNECTED

TETER

TULARE CAMPUS CTE
COLLEGE OF THE SEQUOIAS
4999 E. BARDSLEY AVE.
TULARE, CA

DRAWING TITLE
HORIZONTAL CONTROL PLAN TABLE

PROJECT NO.
20-12032

DRAWING
C403

Know what's below. Call before you dig. 811

Blair, Church & Flynn
CONSULTING ENGINEERS
455 Clovis Avenue, Suite 200
Clovis, California 93612
Tel (559) 326-1400
Fax (559) 326-1500

Drawing: P:\221-0340\Site\productiondrawings\221340_hc01.dwg, Nov 02, 2022 - 12:14pm
Plot By: bdeardorff

PLOT DATE: 11/2/2022 12:14:02 PM

P:\2212-0340\Site\productiondrawings\2210340_grd01.dwg

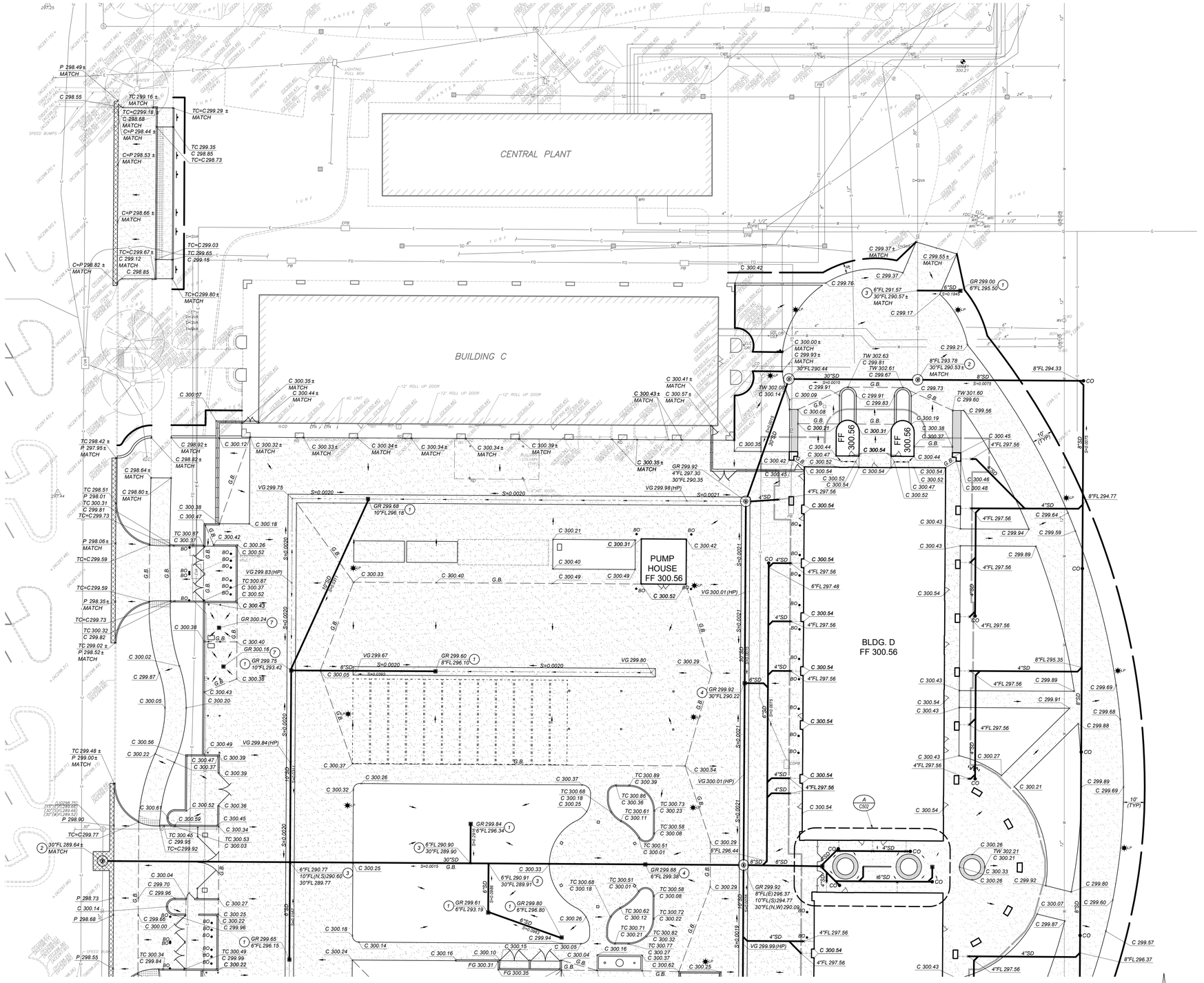

GRADING AND DRAINAGE LEGEND:

C	CONCRETE
D	DIRT
FF	FINISHED FLOOR
FG	FINISHED GRADE
FL	FLOWLINE
G	GUTTER
GR	STORM DRAIN GRATE
HP	HIGH POINT
MS	MOWSTRIP
P	PAVEMENT
TC	TOP OF CURB
TD	TRENCH DRAIN GRATE
TW	TOP OF WALL
VG	VALLEY GUTTER
(344.9)	EXISTING ELEVATION
328.78	NEW FINISHED GRADE
	DIRECTION OF SURFACE DRAINAGE
	BUILDING OVER-EXCAVATION LIMITS; SEE DETAIL [A/X102]
G.B.	GRADE BREAK
	LIMITS OF GRADING
S=0.0050	PIPE SLOPE AND DIRECTION OF FLOW
	SWALE AND DIRECTION OF FLOW
1	V12 STORM DRAIN INLET CASE 1 PER DETAIL [I/X102]
2	CONNECT TO EXISTING STORM DRAIN LINE WITH WATER-TIGHT CONNECTION. VERIFY SIZE, DEPTH, AND LOCATION.
3	CONNECT TO SPRINGLINE OF STORM DRAIN LINE WITH WATER-TIGHT CONNECTION.
4	V12 STORM DRAIN INLET CASE 2 PER DETAIL [I/X102]
5	TRENCH DRAIN PER DETAIL [O/X101]. FURNISH AND INSTALL CHANNEL NUMBERS: KS1-1 THROUGH KS1-4.
6	TRENCH DRAIN PER DETAIL [O/X101]. FURNISH AND INSTALL CHANNEL NUMBERS: KS1-1 THROUGH KS1-17.
7	PRESSURE WASHER DRAIN INLET, SEE PLUMBING PLANS
8	STORM DRAIN MANHOLE CLASS I PER DETAIL [F/X102]
	STORM DRAIN MANHOLE PER DETAIL [F/X102]
CO	SURFACE CLEANOUT PER DETAIL [H/X102]
6"SD	STORM DRAIN PIPELINE; SIZE AS NOTED. TRENCH AND BACKFILL PER DETAIL [C/X102]
S=0.0020	FLOWLINE SLOPE AND DIRECTION OF FLOW

GENERAL GRADING AND DRAINAGE NOTES:

THE REQUIREMENTS AND INFORMATION SET OUT BELOW ARE PROVIDED FOR THE CONTRACTOR'S CONVENIENCE AND DO NOT ENCOMPASS ALL PROJECT REQUIREMENTS DESCRIBED BY THE PROJECT PLANS AND SPECIFICATIONS AND/OR APPLICABLE LAWS, REGULATIONS AND/OR BUILDING CODES.

1. *CONSTRUCTION OF ALL PROJECT SITE IMPROVEMENTS SUBJECT TO ADA ACCESS COMPLIANCE, INCLUDING ACCESSIBLE PATH OF TRAVEL, CURB RETURNS, PARKING STALL(S) AND UNLOADING AREAS, BARRIER FREE AMENITIES AND/OR OTHER APPLICABLE SITE IMPROVEMENTS SHALL CONFORM TO THE AMERICANS WITH DISABILITIES ACT, CALIFORNIA TITLE 24, THE CALIFORNIA BUILDING CODE, CURRENT EDITION(S).*
2. *CONTRACTOR SHALL FIELD VERIFY ALL GRADES AND SLOPES PRIOR TO THE PLACEMENT OF CONCRETE AND/OR PAVEMENT FOR CONFORMANCE WITH ADA ACCESS COMPLIANCE REQUIREMENTS. EXAMPLES OF MINIMUM AND MAXIMUM LIMITS RELATED TO ADA ACCESS COMPLIANCE INCLUDE, BUT ARE NOT LIMITED TO:*
   a) *ACCESSIBLE PATH OF TRAVEL CROSS-SLOPE SHALL NOT EXCEED 2%*
   b) *ACCESSIBLE PATH OF TRAVEL LONGITUDINAL SLOPES SHALL NOT EXCEED 5%*
   c) *RAMP LONGITUDINAL SLOPES SHALL NOT EXCEED 8.33%*
   d) *ACCESSIBLE WALKS SHALL NOT HAVE LESS THAN 48 INCHES IN UNOBSTRUCTED WIDTH*
   e) *ACCESSIBLE PARKING SPACES AND ACCESS AISLES SHALL NOT EXCEED 2% SLOPE IN ANY DIRECTION*
   f) *LANDINGS AT THE TOP AND BOTTOM OF ACCESSIBLE RAMPS SHALL NOT EXCEED 2% SLOPE IN ANY DIRECTION*
   g) *GUTTERS AND ROAD SURFACES DIRECTLY ADJACENT TO AND WITHIN 2 FEET OF A CURB RAMP SHALL HAVE A COUNTER SLOPE NOT TO EXCEED 5%*
3. *CONTRACTOR MUST IMMEDIATELY NOTIFY THE ENGINEER OF RECORD, IDENTIFIED BY THE PROFESSIONAL ENGINEERING SEAL AND SIGNATURE ON THESE PLANS, OF ANY SITE CONDITION(S) AND/OR DESIGN INFORMATION THAT PREVENTS THE CONTRACTOR FROM COMPLYING WITH THE LAWS, REGULATIONS AND/OR BUILDING CODES GOVERNING ADA ACCESS COMPLIANCE.*
4. *GROUND SLOPES AWAY FROM BUILDING PADS IN LANDSCAPED OR DIRT AREAS SHALL BE NO LESS THAN 5% FOR AT LEAST TEN (10) FEET, OR AS OTHERWISE NOTED ON THE PLANS.*
5. *DRAINAGE SHALL NOT BE ALLOWED ONTO ADJACENT PROPERTY.*
6. *ALL FILL MATERIAL USED TO SUPPORT THE FOUNDATIONS OF ANY BUILDING OR STRUCTURE SHALL BE PLACED UNDER THE DIRECTION OF A LICENSED GEOTECHNICAL ENGINEER, AND IN COMPLIANCE WITH THE PROJECT SPECIFICATIONS. A SOILS COMPACTION REPORT SHALL BE SUBMITTED TO THE ENGINEER OF RECORD AS REQUIRED BY THE PROJECT SPECIFICATIONS.*
7. *THE CONTRACTOR SHALL IMPLEMENT DUST CONTROL MEASURES AS REQUIRED BY THE PROJECT SPECIFICATIONS, AND BY GOVERNING PUBLIC AGENCIES.*
8. *THE CONTRACTOR SHALL IMPLEMENT A STORM WATER POLLUTION PREVENTION PLAN (SWPPP) AS REQUIRED BY THE PROJECT SPECIFICATIONS AND THE STATE WATER RESOURCES CONTROL BOARD'S CONSTRUCTION GENERAL PERMIT. IMPLEMENT BEST MANAGEMENT PRACTICES WITHIN PUBLIC RIGHT OF WAY PER LOCAL JURISDICTION REQUIREMENTS.*
9. *AS A FIRST ORDER OF WORK, THE CONTRACTOR SHALL POT HOLE THE EXISTING UTILITY LINES AT THE POINT OF CONNECTION TO VERIFY THE LOCATION, SIZE, PIPE MATERIAL AND ELEVATION SO THAT THE ENGINEER CAN MAKE ELEVATION AND/OR ALIGNMENT ADJUSTMENTS IF NECESSARY. SHOULD POT HOLING DISCOVER ANY DISCREPANCIES, CONTACT THE ENGINEER AND OBTAIN WRITTEN DIRECTION BEFORE PROCEEDING.*
10. *ADJUST UTILITY LIDS WITHIN NEW CONSTRUCTION AREA TO FINISHED GRADE PER DETAIL [B/X102]. REPLACE ALL BROKEN LIDS WITH NEW. PROVIDE TRAFFIC RATED LIDS WITHIN VEHICLE LOADING AREAS.*
11. *WATER TEST PAVEMENT WITHIN NEW IMPROVEMENT AREA. REPLACE PAVEMENT WHERE BIRD BATHS OCCUR AFTER TEST AS DIRECTED BY THE INSPECTOR OR ENGINEER.*
12. *MINIMUM SLOPE ON IMPERVIOUS SURFACES PERPENDICULAR TO ADJACENT STRUCTURE(S), WITHIN ADA PATH, SHALL BE 1% MINIMUM AND 2% MAXIMUM. WHERE DOOR AND GATE LANDINGS OCCUR THE CROSS SLOPE SHALL BE 2% MAXIMUM IN ALL DIRECTIONS*

SCALE: N 1"=20'

0 5 20 40
SCALE IN FEET

Know what's below. Call before you dig.

Blair, Church & Flynn
CONSULTING ENGINEERS
455 Clovis Avenue, Suite 200
Clovis, California 93612
Tel (559) 326-1400
Fax (559) 326-1300

FOR BID ONLY

Teter, LLP expressly reserves its common law copyright and other property rights in these plans, ideas and designs incorporated herein, as an instrument of professional service. These plans are not to be altered or re-used, for any other project without prior written authorization.

MARK	DATE	DESCRIPTION
	11/1/2022	DSA BACKCHECK

REGISTERED PROFESSIONAL ENGINEER LANE R. BAILEY No. 41703 STATE OF CALIFORNIA CIVIL

11/1/2022
Date Signed:

TETER, LLP
FRESNO HEADQUARTERS
VISALIA | BAKERSFIELD | MODESTO | SAN LUIS OBISPO
ARCHITECTS ENGINEERS CONNECTED

TULARE CAMPUS CTE
COLLEGE OF THE SEQUOIAS
4999 E. BARDSLEY AVE.
TULARE, CA.

DRAWING TITLE
PARTIAL GRADING AND DRAINAGE PLAN

PROJECT NO.
20-12032

DRAWING
C501

Drawing: P:\221-0340\Site\productiondrawings\2210340_grd01.dwg, 11/2/2022 - 12:26pm
Plot by: Gutierrez, Nov 02, 2022 - 12:26pm

PLOT DATE: 11/2/2022 12:26:45 PM

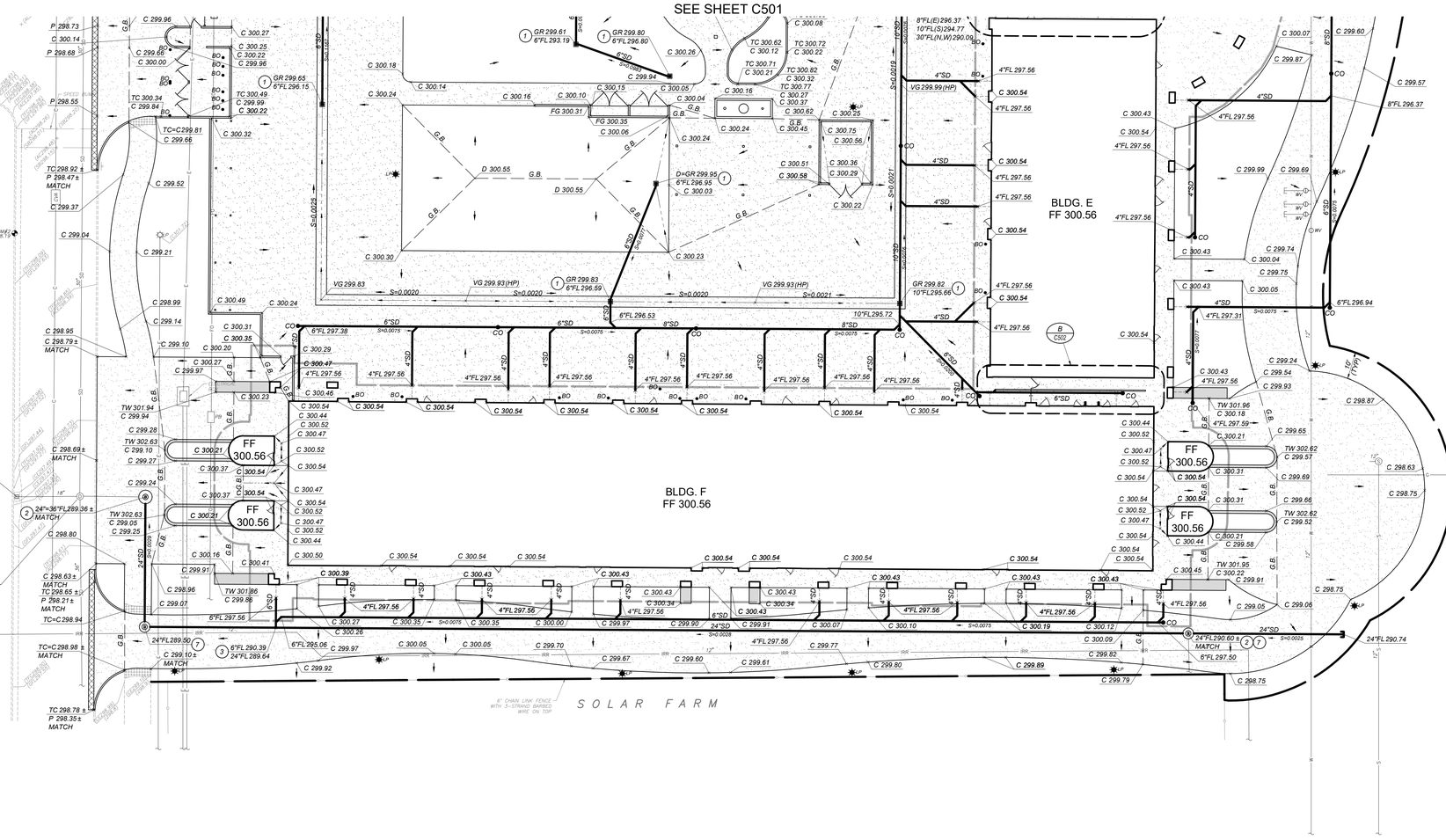

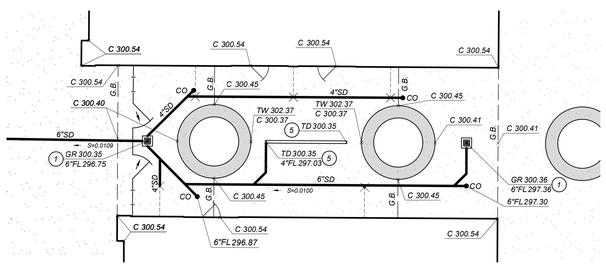

A C502 ENLARGEMENT
SCALE: 1"=10'

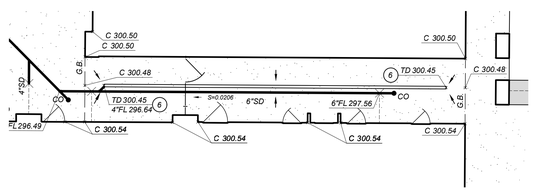

B C502 ENLARGEMENT
SCALE: 1"=10'

GRADING AND DRAINAGE LEGEND:

C	CONCRETE
D	DIRT
FF	FINISHED FLOOR
FG	FINISHED GRADE
FL	FLOWLINE
G	GUTTER
GR	STORM DRAIN GRATE
HP	HIGH POINT
MS	MOWSTRIP
P	PAVEMENT
TC	TOP OF CURB
TD	TRENCH DRAIN GRATE
TW	TOP OF WALL
VG	VALLEY GUTTER
(344.9)	EXISTING ELEVATION
328.78	NEW FINISHED GRADE
	DIRECTION OF SURFACE DRAINAGE
	BUILDING OVER-EXCAVATION LIMITS; SEE DETAIL [A/X102]
G.B.	GRADE BREAK
	LIMITS OF GRADING
S=0.0050	PIPE SLOPE AND DIRECTION OF FLOW
	SWALE AND DIRECTION OF FLOW
1	V12 STORM DRAIN INLET CASE 1 PER DETAIL [I/X102]
2	CONNECT TO EXISTING STORM DRAIN LINE WITH WATER-TIGHT CONNECTION. VERIFY SIZE, DEPTH, AND LOCATION.
3	CONNECT TO SPRINGLINE OF STORM DRAIN LINE WITH WATER-TIGHT CONNECTION.
4	V12 STORM DRAIN INLET CASE 2 PER DETAIL [I/X102]
5	TRENCH DRAIN PER DETAIL [O/X101]. FURNISH AND INSTALL CHANNEL NUMBERS: KS1-1 THROUGH KS1-4.
6	TRENCH DRAIN PER DETAIL [O/X101]. FURNISH AND INSTALL CHANNEL NUMBERS: KS1-1 THROUGH KS1-17.
7	PRESSURE WASHER DRAIN INLET, SEE PLUMBING PLANS
8	STORM DRAIN MANHOLE CLASS I PER DETAIL [F/X102]
	STORM DRAIN MANHOLE PER DETAIL [F/X102]
CO	SURFACE CLEANOUT PER DETAIL [H/X102]
6"SD	STORM DRAIN PIPELINE; SIZE AS NOTED. TRENCH AND BACKFILL PER DETAIL [C/X102]
S=0.0020	FLOWLINE SLOPE AND DIRECTION OF FLOW

GENERAL GRADING AND DRAINAGE NOTES:

THE REQUIREMENTS AND INFORMATION SET OUT BELOW ARE PROVIDED FOR THE CONTRACTOR'S CONVENIENCE AND DO NOT ENCOMPASS ALL PROJECT REQUIREMENTS DESCRIBED BY THE PROJECT PLANS AND SPECIFICATIONS AND/OR APPLICABLE LAWS, REGULATIONS AND/OR BUILDING CODES.

1. *CONSTRUCTION OF ALL PROJECT SITE IMPROVEMENTS SUBJECT TO ADA ACCESS COMPLIANCE, INCLUDING ACCESSIBLE PATH OF TRAVEL, CURB RETURNS, PARKING STALL(S) AND UNLOADING AREAS, BARRIER FREE AMENITIES AND/OR OTHER APPLICABLE SITE IMPROVEMENTS SHALL CONFORM TO THE AMERICANS WITH DISABILITIES ACT, CALIFORNIA TITLE 24, THE CALIFORNIA BUILDING CODE, CURRENT EDITION(S).*
2. *CONTRACTOR SHALL FIELD VERIFY ALL GRADES AND SLOPES PRIOR TO THE PLACEMENT OF CONCRETE AND/OR PAVEMENT FOR CONFORMANCE WITH ADA ACCESS COMPLIANCE REQUIREMENTS. EXAMPLES OF MINIMUM AND MAXIMUM LIMITS RELATED TO ADA ACCESS COMPLIANCE INCLUDE, BUT ARE NOT LIMITED TO:*
   a) *ACCESSIBLE PATH OF TRAVEL CROSS-SLOPE SHALL NOT EXCEED 2%*
   b) *ACCESSIBLE PATH OF TRAVEL LONGITUDINAL SLOPES SHALL NOT EXCEED 5%*
   c) *RAMP LONGITUDINAL SLOPES SHALL NOT EXCEED 8.33%*
   d) *ACCESSIBLE WALKS SHALL NOT HAVE LESS THAN 48 INCHES IN UNOBSTRUCTED WIDTH*
   e) *ACCESSIBLE PARKING SPACES AND ACCESS AISLES SHALL NOT EXCEED 2% SLOPE IN ANY DIRECTION*
   f) *LANDINGS AT THE TOP AND BOTTOM OF ACCESSIBLE RAMPS SHALL NOT EXCEED 2% SLOPE IN ANY DIRECTION*
   g) *GUTTERS AND ROAD SURFACES DIRECTLY ADJACENT TO AND WITHIN 2 FEET OF A CURB RAMP SHALL HAVE A COUNTER SLOPE NOT TO EXCEED 5%*
3. *CONTRACTOR MUST IMMEDIATELY NOTIFY THE ENGINEER OF RECORD, IDENTIFIED BY THE PROFESSIONAL ENGINEERING SEAL AND SIGNATURE ON THESE PLANS, OF ANY SITE CONDITION(S) AND/OR DESIGN INFORMATION THAT PREVENTS THE CONTRACTOR FROM COMPLYING WITH THE LAWS, REGULATIONS AND/OR BUILDING CODES GOVERNING ADA ACCESS COMPLIANCE.*
4. *GROUND SLOPES AWAY FROM BUILDING PADS IN LANDSCAPED OR DIRT AREAS SHALL BE NO LESS THAN 5% FOR AT LEAST TEN (10) FEET, OR AS OTHERWISE NOTED ON THE PLANS.*
5. *DRAINAGE SHALL NOT BE ALLOWED ONTO ADJACENT PROPERTY.*
6. *ALL FILL MATERIAL USED TO SUPPORT THE FOUNDATIONS OF ANY BUILDING OR STRUCTURE SHALL BE PLACED UNDER THE DIRECTION OF A LICENSED GEOTECHNICAL ENGINEER, AND IN COMPLIANCE WITH THE PROJECT SPECIFICATIONS. A SOILS COMPACTION REPORT SHALL BE SUBMITTED TO THE ENGINEER OF RECORD AS REQUIRED BY THE PROJECT SPECIFICATIONS.*
7. *THE CONTRACTOR SHALL IMPLEMENT DUST CONTROL MEASURES AS REQUIRED BY THE PROJECT SPECIFICATIONS, AND BY GOVERNING PUBLIC AGENCIES.*
8. *THE CONTRACTOR SHALL IMPLEMENT A STORM WATER POLLUTION PREVENTION PLAN (SWPPP) AS REQUIRED BY THE PROJECT SPECIFICATIONS AND THE STATE WATER RESOURCES CONTROL BOARD'S CONSTRUCTION GENERAL PERMIT. IMPLEMENT BEST MANAGEMENT PRACTICES WITHIN PUBLIC RIGHT OF WAY PER LOCAL JURISDICTION REQUIREMENTS.*
9. *AS A FIRST ORDER OF WORK, THE CONTRACTOR SHALL POT HOLE THE EXISTING UTILITY LINES AT THE POINT OF CONNECTION TO VERIFY THE LOCATION, SIZE, PIPE MATERIAL AND ELEVATION SO THAT THE ENGINEER CAN MAKE ELEVATION AND/OR ALIGNMENT ADJUSTMENTS IF NECESSARY. SHOULD POT HOLING DISCOVER ANY DISCREPANCIES, CONTACT THE ENGINEER AND OBTAIN WRITTEN DIRECTION BEFORE PROCEEDING.*
10. *ADJUST UTILITY LIDS WITHIN NEW CONSTRUCTION AREA TO FINISHED GRADE PER DETAIL [B/X102]. REPLACE ALL BROKEN LIDS WITH NEW. PROVIDE TRAFFIC RATED LIDS WITHIN VEHICLE LOADING AREAS.*
11. *WATER TEST PAVEMENT WITHIN NEW IMPROVEMENT AREA. REPLACE PAVEMENT WHERE BIRD BATHS OCCUR AFTER TEST AS DIRECTED BY THE INSPECTOR OR ENGINEER.*
12. *MINIMUM SLOPE ON IMPERVIOUS SURFACES PERPENDICULAR TO ADJACENT STRUCTURE(S), WITHIN ADA PATH, SHALL BE 1% MINIMUM AND 2% MAXIMUM, WHERE DOOR AND GATE LANDINGS OCCUR THE CROSS SLOPE SHALL BE 2% MAXIMUM IN ALL DIRECTIONS*

SCALE: 1"=20'
0 5 20 40
SCALE IN FEET

Know what's below. Call before you dig.

Blair, Church & Flynn
CONSULTING ENGINEERS
481 Clovis Avenue, Suite 200
Clovis, California 93612
Tel (559) 326-1400
Fax (559) 326-1500

FOR BID ONLY

Teter, LLP expressly reserves its common law copyright and other property rights in these plans, ideas and designs incorporated herein, as an instrument of professional service. These plans are not to be altered in whole or in part, for any other project without prior written authorization.

MARK	DATE	DESCRIPTION
	11/1/2022	DSA BACKCHECK

REGISTERED PROFESSIONAL ENGINEER CLAYE R. BAILEY No. 51103 CIVIL STATE OF CALIFORNIA
11/1/2022
Date Signed:

TETER, LLP
FRESNO HEADQUARTERS
VISALIA | BAKERSFIELD | MODESTO | SAN LUIS OBISPO
ARCHITECTS ENGINEERS CONNECTED

TETER

TULARE CAMPUS CTE
COLLEGE OF THE SEQUOIAS
4999 E. BARDSLEY AVE.
TULARE, CA

DRAWING TITLE
PARTIAL GRADING AND DRAINAGE PLAN

PROJECT NO.
20-12032

DRAWING
C502

Drawing: P:\221-0340\Site\productiondrawings\221034...grd01.dwg Nov 01, 2022 - 12:27pm
Plot By: bakerw

PLOT DATE: 11/2/2022 12:27:11 PM

P:\221-0340\Site\productiondrawings\02210340_ut01.dwg

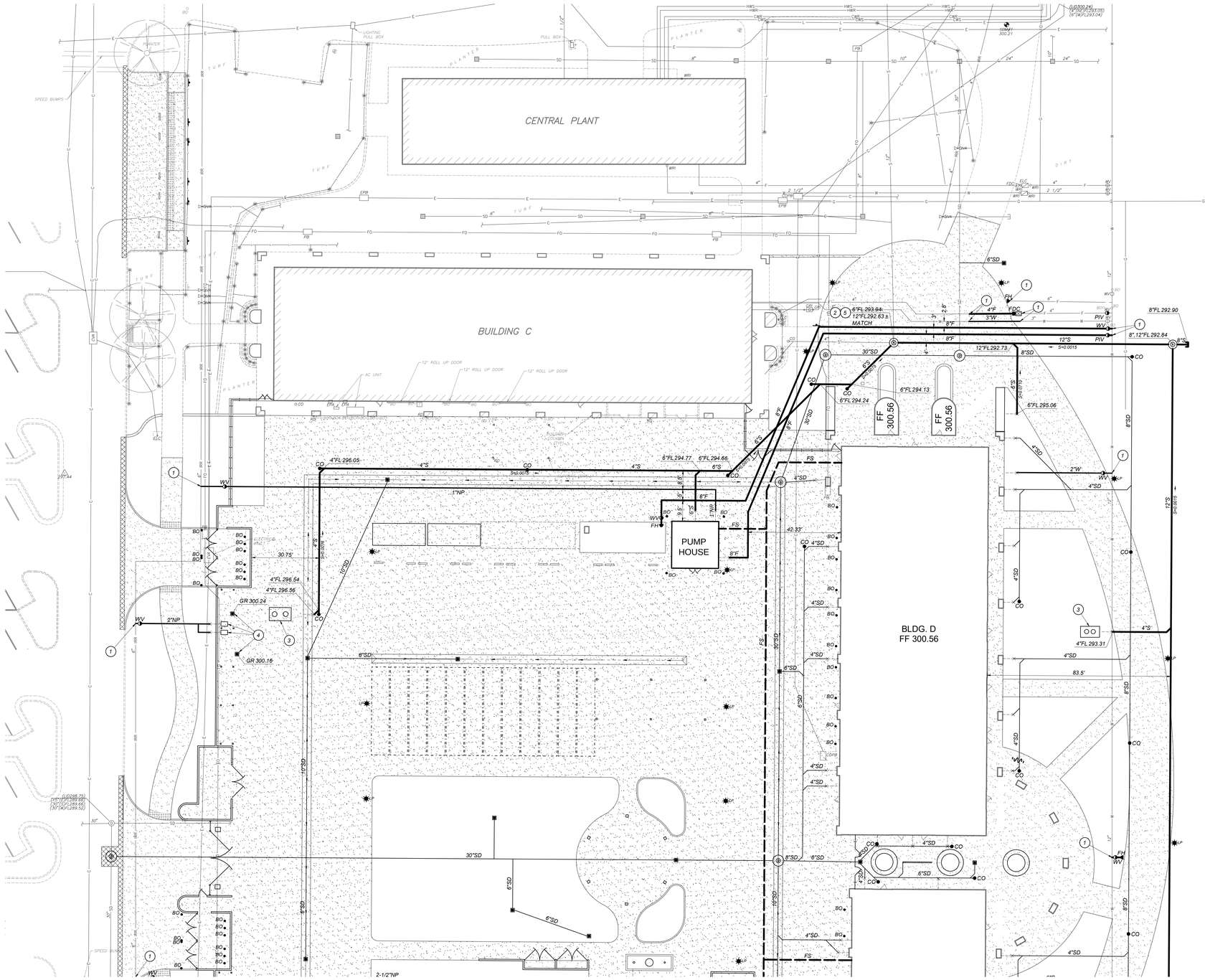

UTILITY LEGEND:

6"S	SEWER MAIN, SIZE AS NOTED ON PLANS. PIPE BEDDING AND BACKFILL PER DETAIL [C/X102]
6"W	WATER MAIN, SIZE AS NOTED ON PLANS, MIN. 30" COVER. THRUST BLOCKS PER DETAIL [D/X102]. PIPE BEDDING AND BACKFILL PER DETAIL [C/X102]
2"NP	NON-POTABLE WATER MAIN, SIZE AS NOTED ON PLANS, MIN. 30" COVER. THRUST BLOCKS PER DETAIL [D/X102]. PIPE BEDDING AND BACKFILL PER DETAIL [C/X102]
FS	FIRE SPRINKLER LATERAL, SEE FIRE PROTECTION PLANS
8"F	FIRE MAIN, SIZE AS NOTED ON PLANS, MIN. 42" COVER. THRUST BLOCKS PER DETAIL [D/X102]. PIPE BEDDING AND BACKFILL PER [C/X102]
6"SD	STORM DRAIN PIPE, SEE GRADING PLAN
FF	FINISHED FLOOR
FL	FLOWLINE
CO	SEWER CLEANOUT PER DETAIL [H/X102]
	DOUBLE CHECK DETECTOR ASSEMBLY PER CITY STD 6411 SEE DETAIL [B/X103]
FDC	FIRE DEPARTMENT CONNECTION PER CITY STD 6411 SEE DETAIL [B/X103]
PIV	POST INDICATOR VALVE PER [D/X102]
FH	FIRE HYDRANT ASSEMBLY PER CITY STD 6315 SEE DETAIL [A/X103]
WV	WATER VALVE PER [J/X102]
	SEWER MANHOLE PER DETAIL [E/X102]
	CAP OR PLUG END OF UTILITY LINE
	POINT OF CONNECTION TO PROPOSED UTILITY, COORDINATE WITH PLUMBING PLANS PRIOR TO CONNECTION.
S=0.0020	FLOWLINE SLOPE AND DIRECTION OF FLOW
1	CONNECT TO EXISTING WATER LINE WITH WATER- TIGHT CONNECTION. VERIFY SIZE, DEPTH, AND LOCATION.
2	CONNECT TO EXISTING SEWER LINE WITH WATER-TIGHT CONNECTION. VERIFY SIZE, DEPTH, AND LOCATION.
3	SAND/OIL SEPARATOR, SEE PLUMBING PLANS
4	PRESSURE WASHER AND DRAIN INLET, SEE PLUMBING PLANS
5	MANHOLE DROP DOWN CONNECTION PER DETAIL [F/X103]

GENERAL SITE UTILITY NOTES:

1. AS FIRST ORDER OF WORK, CONTRACTOR SHALL POTHOLE EXISTING UTILITIES AND NOTIFY ENGINEER IMMEDIATELY OF LOCATIONS, SIZE AND DEPTH.
2. THE CONTRACTOR SHALL FIELD VERIFY THE EXACT LOCATION, SIZE, DEPTH, AND TYPE OF ALL EXISTING UTILITIES AND INTERFERENCES SITUATED ALONG THE ROUTE OF THE PROPOSED CONSTRUCTION PRIOR TO COMMENCEMENT OF EXCAVATION, FABRICATION, AND INSTALLATION. THE CONTRACTOR SHALL CONSTRUCT ALL IMPROVEMENTS IN SUCH A MANNER AS WILL PROTECT ALL EXISTING UNDERGROUND UTILITIES AND, IN THE EVENT OF ANY CONFLICTS, SHALL NOTIFY THE ENGINEER BEFORE PROCEEDING.
3. SEE IRRIGATION PLANS FOR PROPOSED IRRIGATION PIPE ALIGNMENT.
4. COORDINATE EXACT POINTS OF CONNECTION TO BUILDING PLUMBING AND NOTIFY THE ENGINEER OF ANY CONFLICT SO THAT ADJUSTMENTS CAN BE MADE IF NEEDED.
5. SAWCUT EXISTING CONCRETE IMPROVEMENTS AS NECESSARY TO INSTALL NEW WATER OR SEWER IMPROVEMENTS. CONSTRUCT NEW CONCRETE IMPROVEMENTS TO MATCH ADJACENT CONCRETE IMPROVEMENTS AND JOIN TOGETHER WITH DOWEL BARS PER DETAIL [F/X101]
6. INSTALLATION, TYPE, AND MANUFACTURER'S MODELS OF DOMESTIC WATER METERS, DRAIN INLETS/OUTLETS AND OTHER APPURTENANCES OF SITE UTILITY SYSTEMS SHALL BE DONE IN STRICT ACCORDANCE WITH GOVERNING AUTHORITY REQUIREMENTS.
7. LAYOUT OF MATERIALS, EQUIPMENT AND SYSTEMS IS GENERALLY DIAGRAMMATIC UNLESS SPECIFICALLY DIMENSIONED. SOME WORK MAY BE SHOWN OFFSET FOR CLARITY. THE ACTUAL LOCATIONS OF ALL MATERIALS, PIPING, FIXTURES, EQUIPMENT, SUPPORTS, ETC., SHALL BE CAREFULLY PLANNED PRIOR TO INSTALLATION OF ANY WORK TO AVOID ALL INTERFERENCES WITH EACH OTHER OR WITH STRUCTURAL, ELECTRICAL, PLUMBING AND MECHANICAL, ARCHITECTURAL OR ANY OTHER ELEMENTS. ALL CONFLICTS SHALL BE CALLED TO THE ATTENTION OF THE ARCHITECT AND THE ENGINEER PRIOR TO THE INSTALLATION OF ANY WORK OR THE ORDERING OF ANY EQUIPMENT.
8. ANY INSPECTION TO BE MADE BY THE AUTHORITY HAVING JURISDICTION SHALL REQUIRE A MINIMUM OF 24 HOUR NOTICE.
9. PURITY TESTS ARE REQUIRED ON ALL WATER SYSTEM INSTALLATIONS. CONTRACTOR TO COORDINATE WITH THE AUTHORITY HAVING JURISDICTION.
10. IF THE TOP OF THE STEM OF ANY WATER GATE VALVE IS DEEPER THAN 4' BELOW FINISHED PAVEMENT GRADE, THE CONTRACTOR SHALL INSTALL A STEM EXTENSION SO THAT THE TOP OF THE STEM, WITH EXTENSION, SHALL BE NO DEEPER THAN 4' NOR SHALLOWER THAN 2' FROM FINISHED GRADE.
11. BACKFILL UTILITY TRENCHES PER DETAIL [C/X102]
12. ADJUST EXISTING UTILITY LIDS TO FINISHED GRADE PER UTILITY COMPANY STANDARDS AND DETAIL [B/X102] AND INSTALL TRAFFIC RATED LIDS WHERE LOCATED IN A TRAFFIC AREA.

SCALE: N 1"=20'

0 5 20 40
SCALE IN FEET

Know what's below. Call before you dig.

Blair, Church & Flynn
CONSULTING ENGINEERS
451 Clovis Avenue, Suite 200
Clovis, California 93612
Tel (559) 326-1400
Fax (559) 326-1500

FOR BID ONLY

Teter, LLP expressly reserves its common law copyright and other property rights in these plans, specifications, ideas and design incorporated herein, as an instrument of professional service. Any use of these plans, in whole or in part, for any other project without prior written authorization.

MARK	DATE	DESCRIPTION
	11/1/2022	DSA BACKCHECK

REGISTERED PROFESSIONAL ENGINEER
CLAIRE R. BARTLETT
No. 41103
CIVIL
STATE OF CALIFORNIA

11/1/2022
Date Signed:

TETER, LLP
FRESNO HEADQUARTERS
VISALIA | BAKERSFIELD | MODESTO | SAN LUIS OBISPO
ARCHITECTS ENGINEERS CONNECTED

TETER

TULARE CAMPUS CTE
COLLEGE OF THE SEQUOIAS
4999 E. BARDSLEY AVE.
TULARE, CA

DRAWING TITLE
PARTIAL UTILITY PLAN

PROJECT NO.
20-12032

DRAWING
C601

Drawing: P:\221-0340\Site\productiondrawings\02210340_ut01.dwg Plot By: dahrens Nov 02, 2022 - 12:30pm

PLOT DATE: 11/2/2022 12:30:23 PM

P:\221-0340\Site\productiondrawings\2210340_ut01.dwg

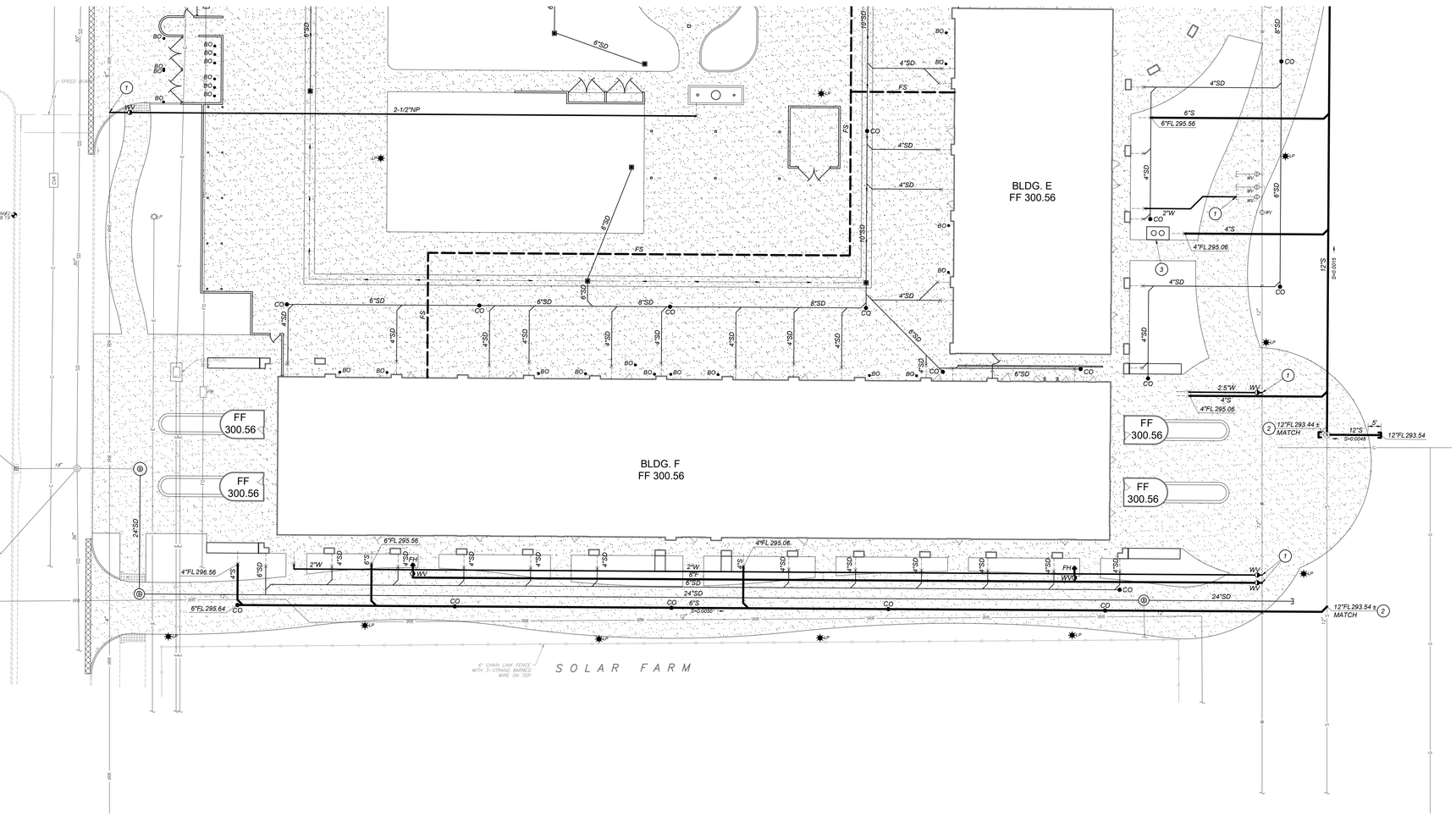

UTILITY LEGEND:

6"S	SEWER MAIN, SIZE AS NOTED ON PLANS. PIPE BEDDING AND BACKFILL PER DETAIL [C/X102]
6"W	WATER MAIN, SIZE AS NOTED ON PLANS, MIN. 30" COVER. THRUST BLOCKS PER DETAIL [D/X102]. PIPE BEDDING AND BACKFILL PER DETAIL [C/X102]
2"NP	NON-POTABLE WATER MAIN, SIZE AS NOTED ON PLANS, MIN. 30" COVER. THRUST BLOCKS PER DETAIL [D/X102] PIPE BEDDING AND BACKFILL PER DETAIL [C/X102]
FS	FIRE SPRINKLER LATERAL, SEE FIRE PROTECTION PLANS
8"F	FIRE MAIN, SIZE AS NOTED ON PLANS, MIN. 42" COVER. THRUST BLOCKS PER DETAIL [D/X102]. PIPE BEDDING AND BACKFILL PER [C/X102]
6"SD	STORM DRAIN PIPE, SEE GRADING PLAN
FF	FINISHED FLOOR
FL	FLOWLINE
CO	SEWER CLEANOUT PER DETAIL [H/X102]
	DOUBLE CHECK DETECTOR ASSEMBLY PER CITY STD 6411 SEE DETAIL [B/X103]
FDC	FIRE DEPARTMENT CONNECTION PER CITY STD 6411 SEE DETAIL [B/X103]
PIV	POST INDICATOR VALVE PER [D/X102]
FH	FIRE HYDRANT ASSEMBLY PER CITY STD 6315 SEE DETAIL [A/X103]
WV	WATER VALVE PER [J/X102]
	SEWER MANHOLE PER DETAIL [E/X102]
	CAP OR PLUG END OF UTILITY LINE
	POINT OF CONNECTION TO PROPOSED UTILITY, COORDINATE WITH PLUMBING PLANS PRIOR TO CONNECTION.
	FLOWLINE SLOPE AND DIRECTION OF FLOW
1	CONNECT TO EXISTING WATER LINE WITH WATER- TIGHT CONNECTION. VERIFY SIZE, DEPTH, AND LOCATION.
2	CONNECT TO EXISTING SEWER LINE WITH WATER-TIGHT CONNECTION. VERIFY SIZE, DEPTH, AND LOCATION.
3	SAND/OIL SEPARATOR, SEE PLUMBING PLANS
4	PRESSURE WASHER AND DRAIN INLET, SEE PLUMBING PLANS
5	MANHOLE DROP DOWN CONNECTION PER DETAIL [F/X103]

GENERAL SITE UTILITY NOTES:

1. AS FIRST ORDER OF WORK, CONTRACTOR SHALL POTHOLE EXISTING UTILITIES AND NOTIFY ENGINEER IMMEDIATELY OF LOCATIONS, SIZE AND DEPTH.
2. THE CONTRACTOR SHALL FIELD VERIFY THE EXACT LOCATION, SIZE, DEPTH, AND TYPE OF ALL EXISTING UTILITIES AND INTERFERENCES SITUATED ALONG THE ROUTE OF THE PROPOSED CONSTRUCTION PRIOR TO COMMENCEMENT OF EXCAVATION, FABRICATION, AND INSTALLATION. THE CONTRACTOR SHALL CONSTRUCT ALL IMPROVEMENTS IN SUCH A MANNER AS WILL PROTECT ALL EXISTING UNDERGROUND UTILITIES AND, IN THE EVENT OF ANY CONFLICTS, SHALL NOTIFY THE ENGINEER BEFORE PROCEEDING.
3. SEE IRRIGATION PLANS FOR PROPOSED IRRIGATION PIPE ALIGNMENT.
4. COORDINATE EXACT POINTS OF CONNECTION TO BUILDING PLUMBING AND NOTIFY THE ENGINEER OF ANY CONFLICT SO THAT ADJUSTMENTS CAN BE MADE IF NEEDED.
5. SAWCUT EXISTING CONCRETE IMPROVEMENTS AS NECESSARY TO INSTALL NEW WATER OR SEWER IMPROVEMENTS. CONSTRUCT NEW CONCRETE IMPROVEMENTS TO MATCH ADJACENT CONCRETE IMPROVEMENTS AND JOIN TOGETHER WITH DOWEL BARS PER DETAIL [F/X101]
6. INSTALLATION, TYPE, AND MANUFACTURER'S MODELS OF DOMESTIC WATER METERS, DRAIN INLETS/OUTLETS AND OTHER APPURTENANCES OF SITE UTILITY SYSTEMS SHALL BE DONE IN STRICT ACCORDANCE WITH GOVERNING AUTHORITY REQUIREMENTS.
7. LAYOUT OF MATERIALS, EQUIPMENT AND SYSTEMS IS GENERALLY DIAGRAMMATIC UNLESS SPECIFICALLY DIMENSIONED. SOME WORK MAY BE SHOWN OFFSET FOR CLARITY. THE ACTUAL LOCATIONS OF ALL MATERIALS, PIPING, FIXTURES, EQUIPMENT, SUPPORTS, ETC., SHALL BE CAREFULLY PLANNED PRIOR TO INSTALLATION OF ANY WORK TO AVOID ALL INTERFERENCES WITH EACH OTHER OR WITH STRUCTURAL, ELECTRICAL, PLUMBING AND MECHANICAL, ARCHITECTURAL OR ANY OTHER ELEMENTS. ALL CONFLICTS SHALL BE CALLED TO THE ATTENTION OF THE ARCHITECT AND THE ENGINEER PRIOR TO THE INSTALLATION OF ANY WORK OR THE ORDERING OF ANY EQUIPMENT.
8. ANY INSPECTION TO BE MADE BY THE AUTHORITY HAVING JURISDICTION SHALL REQUIRE A MINIMUM OF 24 HOUR NOTICE.
9. PURITY TESTS ARE REQUIRED ON ALL WATER SYSTEM INSTALLATIONS. CONTRACTOR TO COORDINATE WITH THE AUTHORITY HAVING JURISDICTION.
10. IF THE TOP OF THE STEM OF ANY WATER GATE VALVE IS DEEPER THAN 4' BELOW FINISHED PAVEMENT GRADE, THE CONTRACTOR SHALL INSTALL A STEM EXTENSION SO THAT THE TOP OF THE STEM, WITH EXTENSION, SHALL BE NO DEEPER THAN 4' NOR SHALLOWER THAN 2' FROM FINISHED GRADE.
11. BACKFILL UTILITY TRENCHES PER DETAIL [C/X102]
12. ADJUST EXISTING UTILITY LIDS TO FINISHED GRADE PER UTILITY COMPANY STANDARDS AND DETAIL [B/X102] AND INSTALL TRAFFIC RATED LIDS WHERE LOCATED IN A TRAFFIC AREA.

SCALE: N 1"=20'

0 5 20 40
SCALE IN FEET

811 Know what's below. Call before you dig.

Blair, Church & Flynn
CONSULTING ENGINEERS
455 Clovis Avenue, Suite 300
Clovis, California 93612
Tel (559) 326-1400
Fax (559) 326-1500

FOR BID ONLY

Teter, LLP expressly reserves its common law copyright and other property rights in these plans, specifications, ideas and designs incorporated herein, as an instrument of professional service. These plans may not be used in whole or in part, for any other project without prior written authorization.

MARK	DATE	DESCRIPTION
	11/1/2022	DSA BACKCHECK

REGISTERED PROFESSIONAL ENGINEER CARL R. BARSLEY No. 41765 CIVIL STATE OF CALIFORNIA

11/1/2022
Date Signed:

TETER, LLP
FRESNO HEADQUARTERS
VISALIA | BAKERSFIELD | MODESTO | SAN LUIS OBISPO
ARCHITECTS ENGINEERS CONNECTED

TULARE CAMPUS CTE
COLLEGE OF THE SEQUOIAS
4999 E. BARDSLEY AVE.
TULARE, CA

DRAWING TITLE
PARTIAL UTILITY PLAN

PROJECT NO.
20-12032

DRAWING
C602

Drawing: P:\221-0340\Site\productiondrawings\2210340_ut01.dwg Nov 02, 2022 - 12:30pm
Plot by: bernard

PLOT DATE: 11/2/2022 12:30:57 PM

P:\221-0340\Site\productiondrawings\221340_dt01.dwg

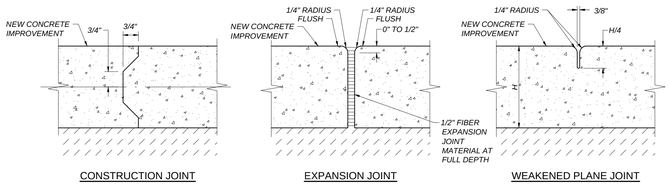

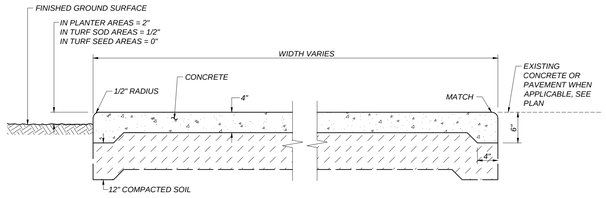

A X101 CONCRETE WALK
NOT TO SCALE

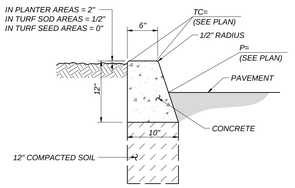

D X101 CONCRETE CURB
NOT TO SCALE

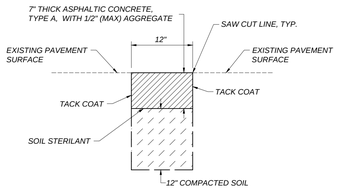

E X101 ASPHALT CONCRETE PLUG
NOT TO SCALE

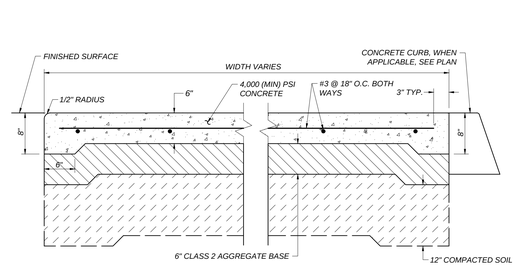

B X101 HEAVY DUTY CONCRETE PAVEMENT STRUCTURAL SECTION
NOT TO SCALE

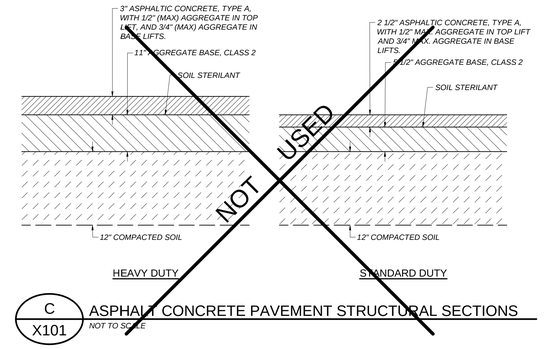

C X101 ASPHALT CONCRETE PAVEMENT STRUCTURAL SECTIONS
NOT TO SCALE

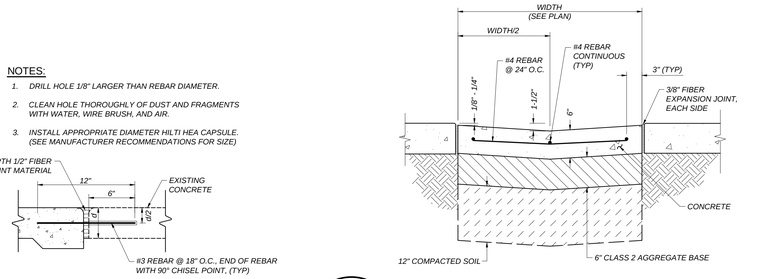

NOTES:
1. DRILL HOLE 1/8" LARGER THAN REBAR DIAMETER.
2. CLEAN HOLE THOROUGHLY OF DUST AND FRAGMENTS WITH WATER, WIRE BRUSH, AND AIR.
3. INSTALL APPROPRIATE DIAMETER HILTI HEA CAPSULE. (SEE MANUFACTURER RECOMMENDATIONS FOR SIZE)

F X101 DOWEL BAR
NOT TO SCALE

G X101 REINFORCED CONCRETE VALLEY GUTTER
NOT TO SCALE

NOTES:
1. THE DETECTABLE WARNING SURFACE SHALL BE YELLOW AND APPROXIMATE 33538 OF SAE AMSSTD-595A.
2. WHERE DETECTABLE WARNING SURFACE DOES NOT PROVIDE A 70% CONTRAST WITH ADJACENT WALKING SURFACES, A 1-INCH WIDE MINIMUM VISUALLY CONTRASTING SURFACE SHALL SEPARATE THE DETECTABLE WARNING FROM THE ADJACENT SURFACE.
3. THE DOMES SHALL BE MANUFACTURED BY ARMOR TILE INC. OR APPROVED EQUAL.
4. ONLY APPROVED DSA/AC DETECTABLE WARNING PRODUCTS AND DIRECTIONAL SURFACES SHALL BE INSTALLED AS PROVIDED IN THE CALIFORNIA CODE OF REGULATIONS (CCR), TITLE 24, PART 1, CHAPTER 5, ARTICLES 2, 3 AND 4.

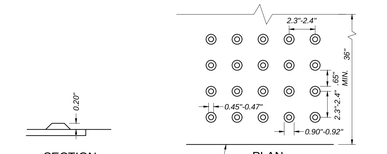

H X101 DETECTABLE WARNINGS
NOT TO SCALE

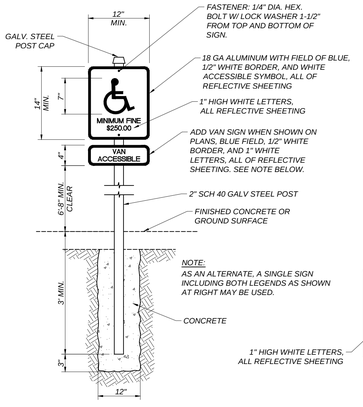

I X101 ACCESSIBLE PARKING STALL SIGN
NOT TO SCALE

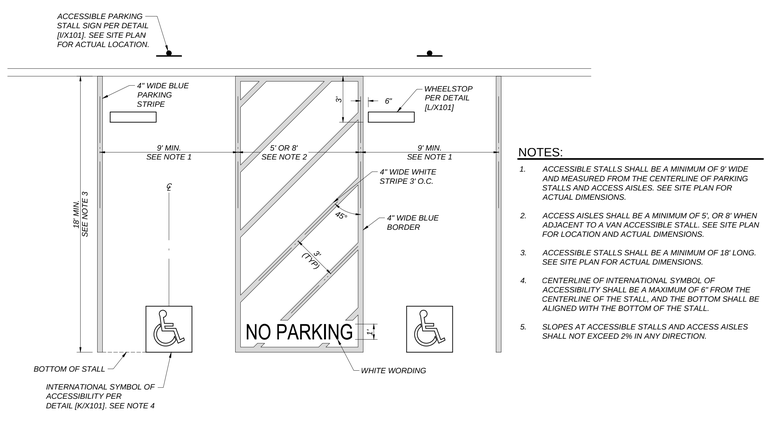

NOTES:
1. ACCESSIBLE STALLS SHALL BE A MINIMUM OF 9' WIDE AND MEASURED FROM THE CENTERLINE OF PARKING STALLS AND ACCESS AISLES. SEE SITE PLAN FOR ACTUAL DIMENSIONS.
2. ACCESS AISLES SHALL BE A MINIMUM OF 5', OR 8' WHEN ADJACENT TO A VAN ACCESSIBLE STALL. SEE SITE PLAN FOR LOCATION AND ACTUAL DIMENSIONS.
3. ACCESSIBLE STALLS SHALL BE A MINIMUM OF 18' LONG. SEE SITE PLAN FOR ACTUAL DIMENSIONS.
4. CENTERLINE OF INTERNATIONAL SYMBOL OF ACCESSIBILITY SHALL BE A MAXIMUM OF 6" FROM THE CENTERLINE OF THE STALL, AND THE BOTTOM SHALL BE ALIGNED WITH THE BOTTOM OF THE STALL.
5. SLOPES AT ACCESSIBLE STALLS AND ACCESS AISLES SHALL NOT EXCEED 2% IN ANY DIRECTION.

J X101 ACCESSIBLE PARKING STALL
NOT TO SCALE

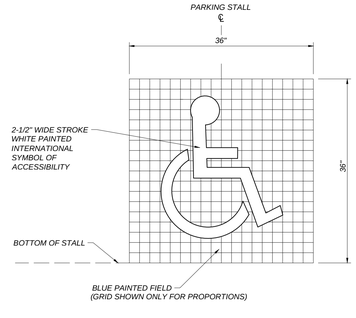

K X101 ACCESSIBLE SYMBOL
NOT TO SCALE

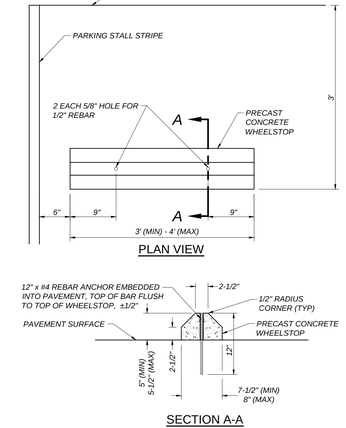

L X101 CONCRETE WHEELSTOP
NOT TO SCALE

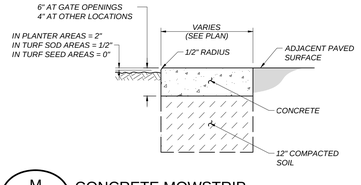

M X101 CONCRETE MOWSTRIP
NOT TO SCALE

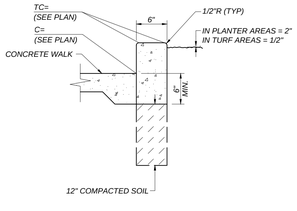

N X101 VERTICAL CURB DETAIL
NOT TO SCALE

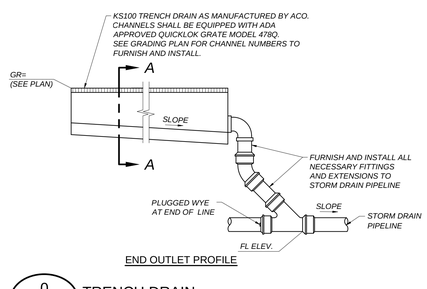

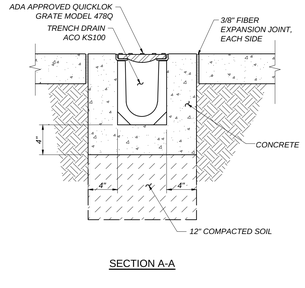

O X101 TRENCH DRAIN
NOT TO SCALE

PLOT DATE: 11/2/2022 12:15:54 PM

FOR BID ONLY

These CAD files, plans, specifications, and designs are instruments of service created by Teter, LLP and are the property of Teter, LLP. Reuse of these documents in whole or in part, for any other project without the written authorization of Teter, LLP is prohibited. Teter, LLP expressly reserves its common law copyright and other property rights in these documents. Reuse of these documents, in whole or in part, for any other project without the written authorization of Teter, LLP is prohibited. Teter, LLP expressly reserves its common law copyright and other property rights in these documents. Reuse of these documents, in whole or in part, for any other project without the written authorization of Teter, LLP is prohibited.

MARK	DATE	DESCRIPTION
	11/1/2022	DSA BACKCHECK

REGISTERED PROFESSIONAL ENGINEER CLAIRE R. BARTLEY No. 47103 CIVIL STATE OF CALIFORNIA

11/1/2022
Date Signed:

TETER, LLP
ARCHITECTS ENGINEERS CONNECTED
FRESNO HEADQUARTERS
VISALIA | BAKERSFIELD | MODESTO | SAN LUIS OBISPO

TETER

TULARE CAMPUS CTE
COLLEGE OF THE SEQUOIAS
4999 E. BARDSLEY AVE.
TULARE, CA

DRAWING TITLE
DETAILS

PROJECT NO.
20-12032

DRAWING
X101

Blair, Church & Flynn
CONSULTING ENGINEERS
455 Clovis Avenue, Suite 200
Clovis, California 93612
Tel (559) 326-1400
Fax (559) 326-1500

Drawing: P:\221-0340\Site\productiondrawings\221340_dt01.dwg Nov 02, 2022 - 12:15pm
Plot By: bbrandt

P:\221-0340\Site\productiondrawings\221340_dt102.dwg

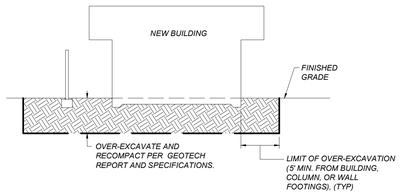

A X102 OVER-EXCAVATION
NOT TO SCALE

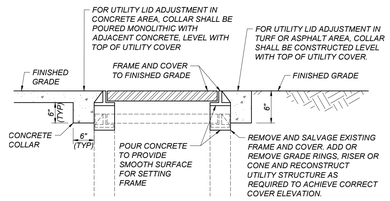

B X102 ADJUST UTILITY LID
NOT TO SCALE

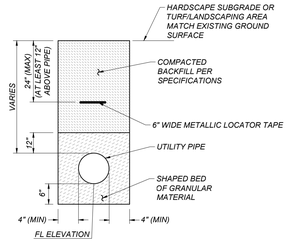

C X102 TRENCH FOR UTILITY LINES
NOT TO SCALE

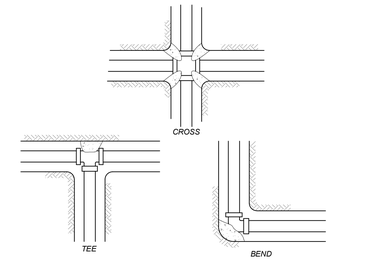

Table Of Bearing Areas Required (In Square Feet)*					
Pipe Diameter	4" Or Smaller	6"	8"	10"	12"
Cross, Tee, 90° Bend, Plug, Hydrant, Valve	6.3	13.2	22.7	34.2	48.3
45° Bend	3.4	7.1	12.3	18.5	26.1
22 1/2° Bend	1.7	3.6	9.4	9.4	13.3
11 1/4° Bend	0.9	1.8	4.7	4.7	6.7

* TABLE CALCULATED BASED ON NFPA 24, CURRENT EDITION TABLE A.10.8.2(b), WITH 250 PSI WATER PRESSURE AND 1500 PSF SOIL BEARING PRESSURE.

D X102 CONCRETE THRUST BLOCKS
NOT TO SCALE

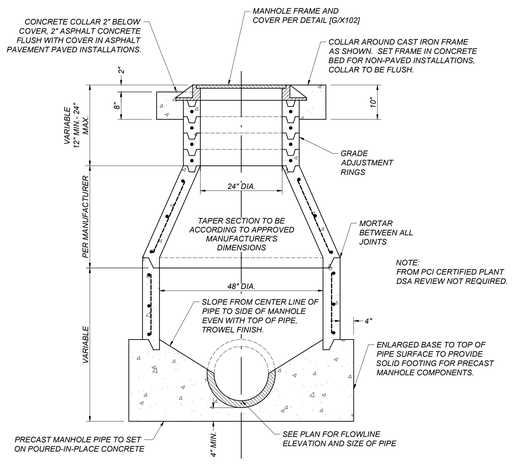

E X102 SANITARY SEWER MANHOLE
NOT TO SCALE

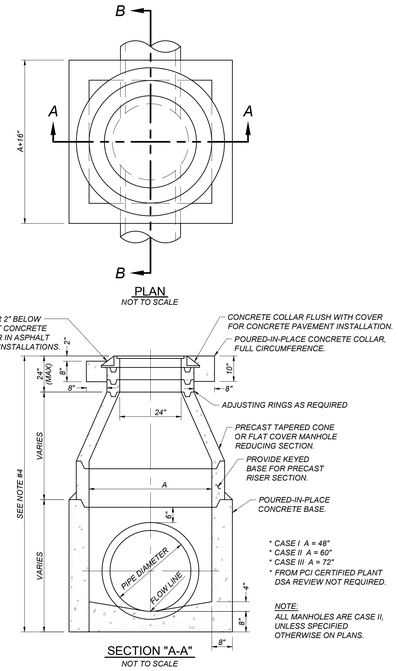

F X102 STORM DRAIN MANHOLE
NOT TO SCALE

NOTES:

1. PRECAST PIPE, ADJUSTING RINGS AND TAPERED SECTIONS SHALL BE CONSTRUCTED IN ACCORDANCE WITH A.S.T.M. C-478, USING TYPE II CEMENT.
2. ALL JOINTS BETWEEN PRECAST SECTIONS SHALL BE MORTARED.
3. INTERIOR OF THE MANHOLE HALL HAVE A SMOOTH TROWELED SURFACE, (WOOD TROWEL).
4. IF THE DISTANCE BETWEEN THE FLOW LINE OF THE MANHOLE AND THE FINISH GRADE OF THE LID IS GREATER THAN OR EQUAL TO 12 FEET, THE MANHOLE IS TO BE CONSTRUCTED WITH STEPS.

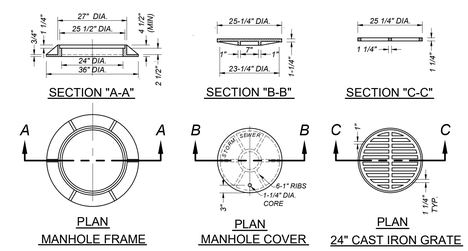

NOTES:

1. ALL DIMENSIONS ARE FINISHED DIMENSIONS.
2. MATERIAL SHALL BE CAST IRON.
3. FRAME AND COVER TO BE CONSTRUCTED IN ACCORDANCE WITH A.S.T.M. DESIGNATION A48, CLASS 25.
4. MANHOLE COVER DESIGN, AS A MINIMUM, IS TO HAVE THE WORDS "STORM SEWER" OR "STORM DRAIN" MOLDED INTO THE COVER, AS APPROPRIATE.
5. GRATE OPENINGS SHALL BE 1/2" MAXIMUM WHERE LOCATED WITHIN THE PEDESTRIAN PATH OF TRAVEL.
6. INSTALL SLOTTED GRATE SO SLOTS ARE PARALLEL WITH THE DIRECTION OF SURFACE DRAINAGE FLOW.

G X102 MANHOLE FRAME AND LID
NOT TO SCALE

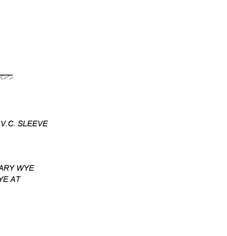

H X102 SURFACE CLEANOUT
NOT TO SCALE

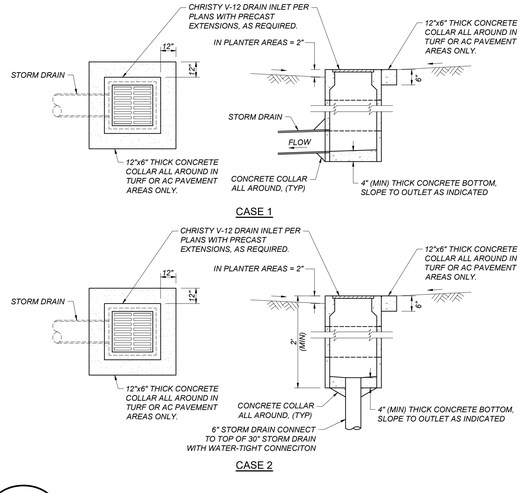

I X102 V-12 DRAIN INLET WITH CONCRETE COLLAR
NOT TO SCALE

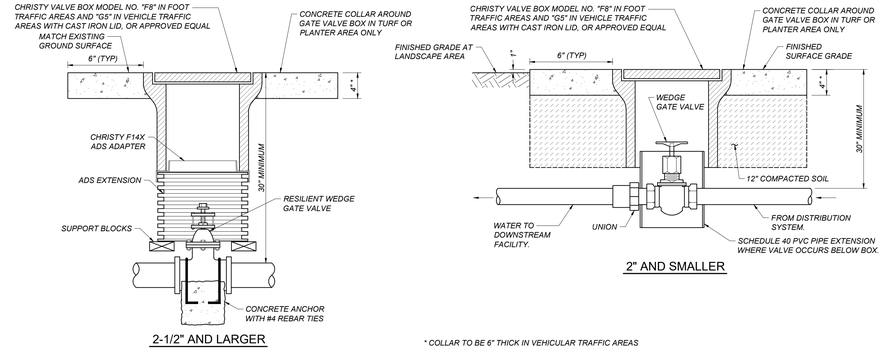

* COLLAR TO BE 6" THICK IN VEHICULAR TRAFFIC AREAS

J X102 GATE VALVE AND LID
NOT TO SCALE

FOR BID ONLY

These L&P expressly reserves its common law copyright and other property rights in these plans, specifications, ideas and design incorporated herein, as an instrument of professional service. These plans not to be altered in whole or in part, for any other project without prior written authorization.

MARK	DATE	DESCRIPTION
	11/1/2022	DSA BACKCHECK

REGISTERED PROFESSIONAL ENGINEER CLARE R. BARSLEY No. 41065 CIVIL STATE OF CALIFORNIA

11/1/2022
Date Signed:

TETER, LLP
FRESNO HEADQUARTERS
VISALIA | BAKERSFIELD | MODESTO | SAN LUIS OBISPO
ARCHITECTS ENGINEERS CONNECTED

TETER

TULARE CAMPUS CTE
COLLEGE OF THE SEQUOIAS
4999 E. BARDSLEY AVE.
TULARE, CA

DRAWING TITLE
DETAILS

PROJECT NO.
20-12032

DRAWING
X102

Blair, Church & Flynn
CONSULTING ENGINEERS
465 Clovis Avenue, Suite 200
Clovis, California 93612
Tel (559) 326-1400
Fax (559) 326-1500

Drawing: P:\221-0340\Site\productiondrawings\221340_dt102.dwg, Layout: X102
Plot by: barsleyc Nov 02, 2022 - 12:23pm

PLOT DATE: 11/2/2022 12:23:37 PM

P:\221-0340\Site\productiondrawings\221340_dtl03.dwg

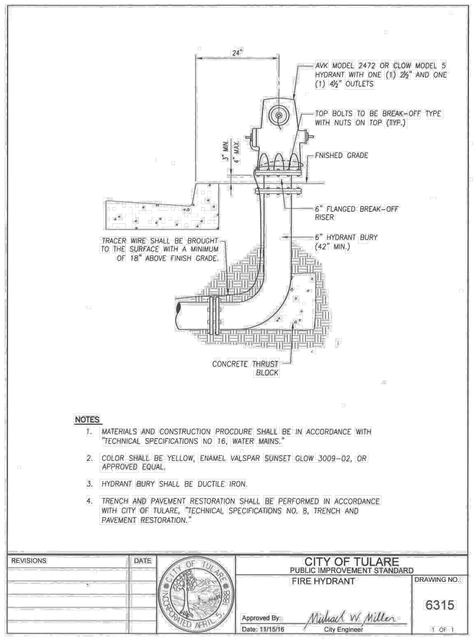

NOTES

1. MATERIALS AND CONSTRUCTION PROCDURE SHALL BE IN ACCORDANCE WITH "TECHNICAL SPECIFICATIONS NO 16, WATER MAINS."
2. COLOR SHALL BE YELLOW, ENAMEL VALSPAR SUNSET GLOW 3009-02, OR APPROVED EQUAL.
3. HYDRANT BURY SHALL BE DUCTILE IRON.
4. TRENCH AND PAVEMENT RESTORATION SHALL BE PERFORMED IN ACCORDANCE WITH CITY OF TULARE, "TECHNICAL SPECIFICATIONS NO. 8, TRENCH AND PAVEMENT RESTORATION."

REVISIONS	DATE	CITY OF TULARE PUBLIC IMPROVEMENT STANDARD	DRAWING NO.:
		FIRE HYDRANT	6315
		Approved By: Michael W. Miller Date: 11/15/16 City Engineer	1 OF 1

A X103 FIRE HYDRANT
NOT TO SCALE

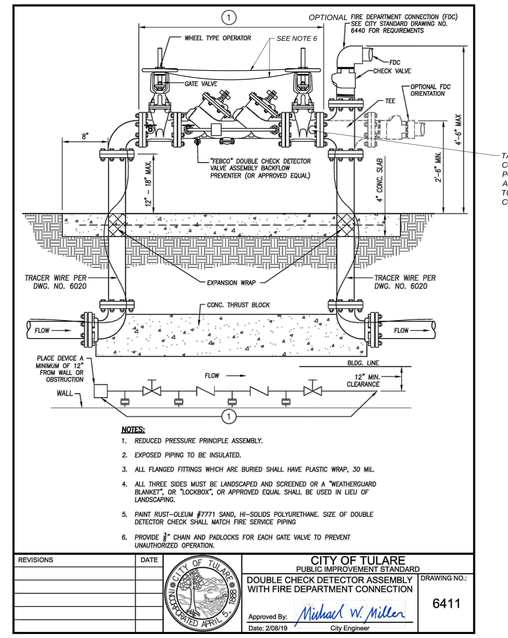

NOTES:

1. REDUCED PRESSURE PRINCIPLE ASSEMBLY.
2. EXPOSED PIPING TO BE INSULATED.
3. ALL FLANGED FITTINGS WHICH ARE BURIED SHALL HAVE PLASTIC WRAP, 30 MIL.
4. ALL THREE SIDES MUST BE LANDSCAPED AND SCREENED OR A "WEATHERGUARD BLANKET", OR "LOCKBOX", OR APPROVED EQUAL SHALL BE USED IN LIEU OF LANDSCAPING.
5. PAINT RUST-OLEUM #7771 SAND, HI-SOLIDS POLYURETHANE. SIZE OF DOUBLE DETECTOR CHECK SHALL MATCH FIRE SERVICE PIPING
6. PROVIDE ⅜" CHAIN AND PADLOCKS FOR EACH GATE VALVE TO PREVENT UNAUTHORIZED OPERATION.

REVISIONS	DATE	CITY OF TULARE PUBLIC IMPROVEMENT STANDARD	DRAWING NO.:
		DOUBLE CHECK DETECTOR ASSEMBLY WITH FIRE DEPARTMENT CONNECTION	6411
		Approved By: Michael W. Miller Date: 2/08/19 City Engineer	

B X103 DOUBLE CHECK DETECTOR ASSEMBLY WITH FIRE DEPARTMENT CONNECTION
NOT TO SCALE

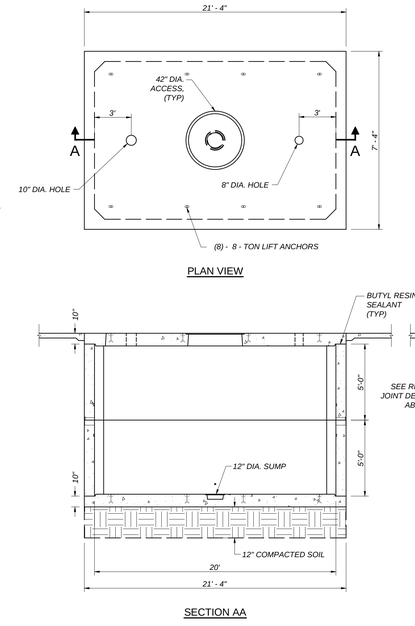

PLAN VIEW

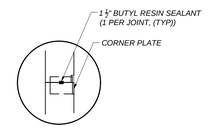

RISER JOINT DETAIL

NOTE:
FROM PCI CERTIFIED PLANT.
DSA REVIEW NOT REQUIRED

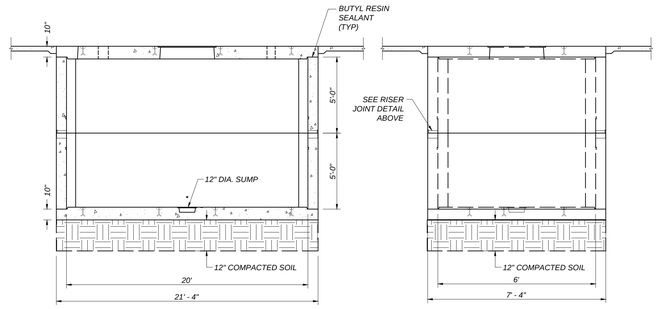

SECTION AA

END VIEW

C X103 WATER VAULT
NOT TO SCALE

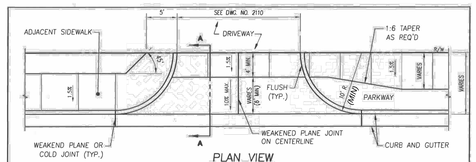

PLAN VIEW

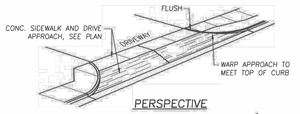

PERSPECTIVE

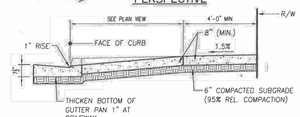

SECTION A–A

NOTES:

1. ALL CONCRETE SHALL BE CLASS 2 CONCRETE.
2. SEE DRAWING NO. 2110 FOR DRIVE APPROACH WIDTH INFORMATION.
3. WIDTH AND LOCATION OF DRIVE APPROACHES ON STATE ROUTES SUBJECT TO APPROVAL BY CALTRANS.
4. REINFORCING BARS MAY BE REQUIRED AT THE DISCRETION OF THE CITY ENGINEER.
5. TYPES OF FINISH: CURB – STEEL TROWEL GUTTER, DRIVEWAY, & SIDEWALK – BROOM
5. COMPACT UPPER 6" OF SUBGRADE UNDER CURB, GUTTER AND DRIVE APPROACH TO 95% REL. COMPACTION (ASTM D1557).

REVISIONS	DATE	CITY OF TULARE PUBLIC IMPROVEMENT STANDARD	DRAWING NO.:
		MULTI-FAMILY/OFFICE/COMMERCIAL DRIVE APPROACH WITH CURB RETURNS	2114
		Approved By: Michael W. Miller Date: 11/15/16 City Engineer	1 OF 1

D X103 CONCRETE DRIVE APPROACH
NOT TO SCALE

NOTE:
POST INDICATOR VALVE AND FIRE DEPARTMENT CONNECTION SHALL MEET THE LOCAL FIRE AUTHORITY STANDARDS.

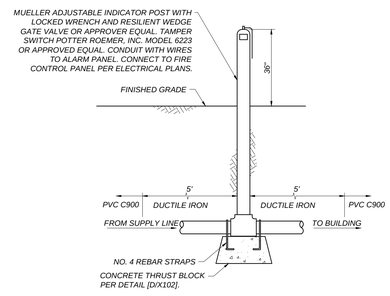

E X103 POST INDICATOR VALVE
NOT TO SCALE

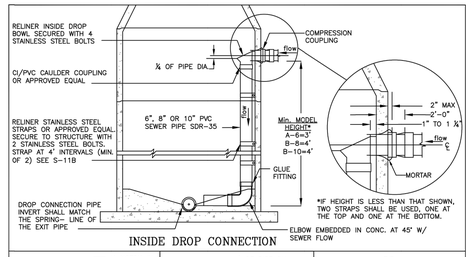

INSIDE DROP CONNECTION

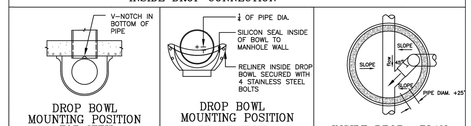

NOTES:

1. ALL INSIDE DROP CONNECTIONS FOR SERVICES AND COLLECTOR SEWER SHALL USE THE DROP BOWL AS PRODUCED BY:
   RELINER-DURAN, INC.
   53 MT. ARCHER RD.
   LYME, CT 06371
   (860)434-0277 FAX: (860)434-3195 OR APPROVAL EQUAL
2. DROP BOWL MODEL "A-6" SHALL BE USED FOR ALL LINES UP THROUGH FULL 6" INLETS. DROP BOWLS MODEL "B-8" SHALL BE USED FOR ALL 8" INLETS. DROP BOWLS MODEL "B-10" SHALL BE USED FOR ALL 10" INLETS. 6" ONLY ALLOWABLE FOR REPLACING EXISTING 6" DROP. LINES LARGER THAN 10" SHALL BE AS DIRECTED BY THE ENGINEER.
3. SECURE DROP PIPE TO MANHOLE WALL WITH RELINER-DURAN, INC STAINLESS STEEL ADJUSTABLE CLAMPING BRACKETS OR APPROVED EQUAL (SEE DETAIL S-11B).
4. ATTACH THE DROP BOWL & EACH CLAMPING BRACKET TO THE MANHOLE WALL WITH ⅜" X 3 ¾" RAMSET/RED HEAD BOLTS. PRE-ROTO DRILL AND SET BOLTS IN PLACE WITH EPOXY PASTE. EPOXY SHALL MEET THE FOLLOWING REQUIREMENTS:
   A. EPOXY PASTE SHALL BE A TWO COMPONENT, 100% SOLID SYSTEM. EPOXY SHALL BE SIKADUR 31 HI-MOD GEL BY SIKA CORPORATION (PHONE 562/941-0231) OR EQUAL.
   B. THE EPOXY PASTE SHALL DEVELOP A MINIMUM COMPRESSIVE STRENGTH OF 5,000 PSI IN 28 DAYS WHEN TESTED IN ACCORDANCE WITH ASTM D695 AT 73 DEGREES.
   C. THE EPOXY PASTE SHALL DEVELOP A MINIMUM TENSILE STRENGTH OF 3,000 PSI IN 14 DAYS WHEN TESTED IN ACCORDANCE WITH ASTM D638.
   D. THE EPOXY PASTE SHALL DEVELOP A MINIMUM BOND STRENGTH OF 2,000 PSI IN 2 DAYS WHEN TESTED IN ACCORDANCE WITH ASTM C882 (HARDENED CONCRETE TO HARDENED CONCRETE).

DROP CONNECTIONS	REF. & REV. AUG. 2015	S–11A 1 OF 2

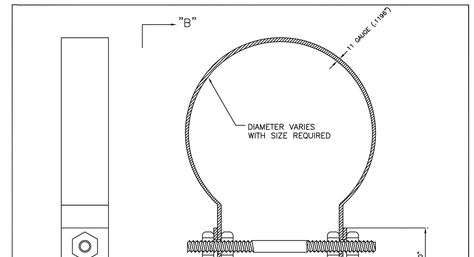

STAINLESS STEEL ADJUSTABLE CLAMPING BRACKED AS MANUFACTURED BY:

RELINER-DURAN, INC.
53 MT. ARCHER RD.
LYME, CT 06371
(860)434-0277 FAX: (860)434-3195
OR APPROVAL EQUAL

SPECIFICATIONS:
1) CLAMP AND BRACKETS IS TYPE 304 STAINLESS STEEL, 11 GAUGE (.1196").

2) 3/8" ø PINCH BOLT AND NUTS IS TYPE 18-8 STAINLESS STEEL.

STAINLESS STEEL ADJUSTABLE CLAMPING BRACKETS	REF. & REV. JUNE 2014	S–11B 2 OF 2

F X103 SEWER MANHOLE DROP CONNECTION
NOT TO SCALE

FOR BID ONLY

Teter, LLP expressly reserves its common law copyright and other property rights in these plans, specifications, ideas and designs. Unexpressed ideas, as an consequence of publication of these documents, may not be used in whole or in part, for any other project without the prior written authorization.

MARK	DATE	DESCRIPTION
	11/1/2022	DSA BACKCHECK

REGISTERED PROFESSIONAL ENGINEER LANE R. BAILEY No. 47103 CIVIL STATE OF CALIFORNIA

11/1/2022
Date Signed:

TETER, LLP
FRESNO HEADQUARTERS
VISALIA | BAKERSFIELD | MODESTO | SAN LUIS OBISPO
ARCHITECTS ENGINEERS CONNECTED

TETER

TULARE CAMPUS CTE
COLLEGE OF THE SEQUOIAS
4999 E. BARDSLEY AVE.
TULARE, CA.

DRAWING TITLE
DETAILS

PROJECT NO.
20-12032

DRAWING
X103

Drawing: P:\221-0340\Site\productiondrawings\221340_dtl03.dwg Xref: X102 dtl1.dwt
Plot By: kalexander Nov 02, 2022 - 12:16pm

Blair, Church & Flynn
CONSULTING ENGINEERS
455 Clovis Avenue, Suite 200
Clovis, California 93612
Tel (559) 326-1400
Fax (559) 326-1900

PLOT DATE: 11/2/2022 12:16:24 PM

P:\221-0340\Site\production\drawings\221340_Ir01.dwg

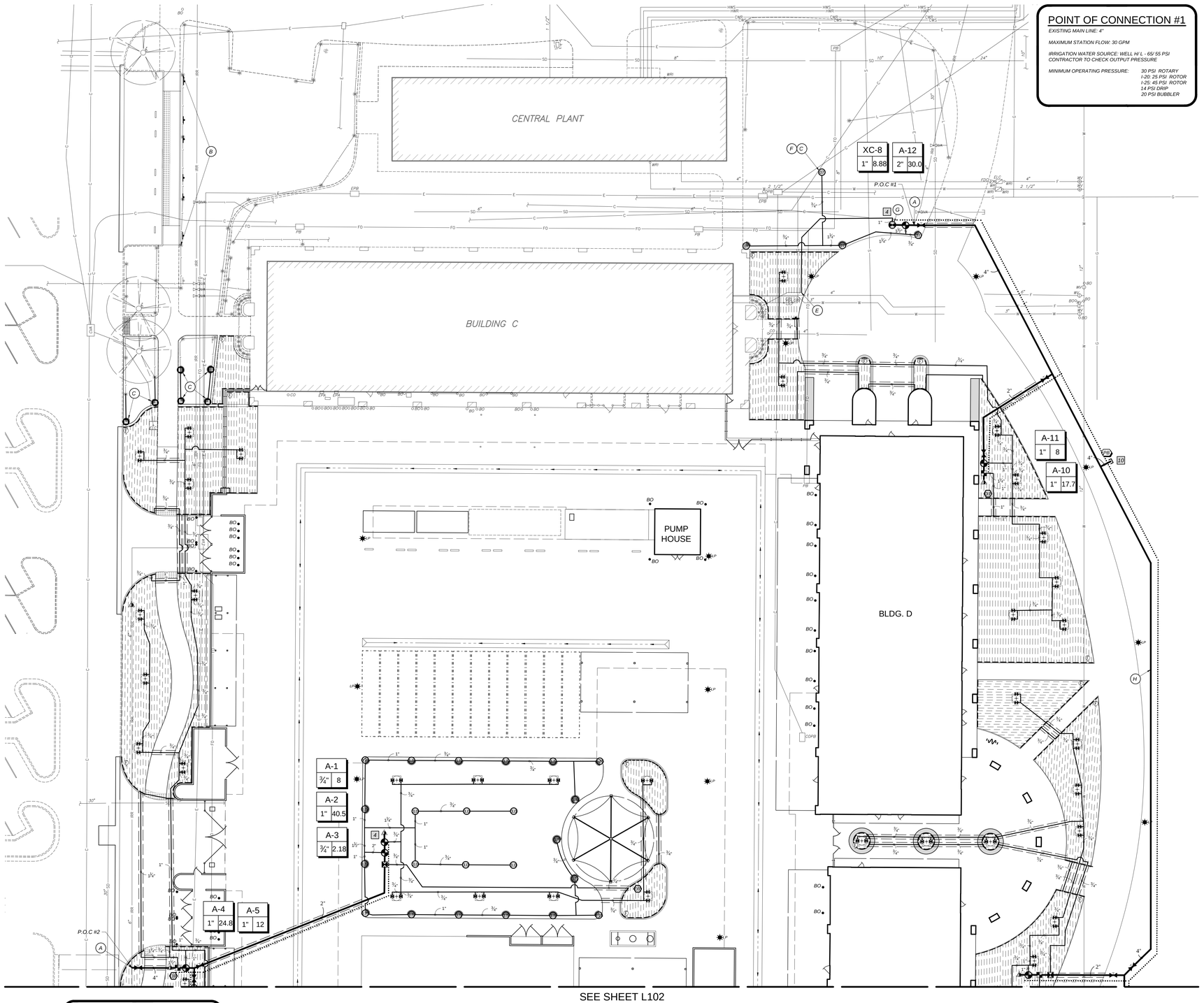

SEE SHEET L102

POINT OF CONNECTION #1

EXISTING MAIN LINE: 4"

MAXIMUM STATION FLOW: 30 GPM

IRRIGATION WATER SOURCE: WELL H/ L - 65/ 55 PSI
CONTRACTOR TO CHECK OUTPUT PRESSURE

MINIMUM OPERATING PRESSURE:
30 PSI ROTARY
I-20: 25 PSI ROTOR
I-25: 45 PSI ROTOR
14 PSI DRIP
20 PSI BUBBLER

POINT OF CONNECTION #2

EXISTING MAIN LINE: 6"

MAXIMUM STATION FLOW: 40.5 GPM

IRRIGATION WATER SOURCE: WELL H/ L - 65/ 55 PSI
CONTRACTOR TO CHECK OUTPUT PRESSURE

MINIMUM OPERATING PRESSURE:
30 PSI ROTARY
I-20: 25 PSI ROTOR
I-25: 45 PSI ROTOR
14 PSI DRIP
20 PSI BUBBLER

IRRIGATION LEGEND

NOTE: FLOW FOR AN ADJUSTABLE ARC NOZZLE IS BASED ON A HALF CIRCLE ARC

SYMBOL	MANUFACTURER/MODEL/DESCRIPTION	ARC	PSI	GPM	RADIUS	DETAIL
	EXISTING RELOCATED MP ROTATOR K HUNTER MP2000 PROS-06-PRS40-CV	90-210	40	0.77	19'	K/L103
	TREE BUBBLER HUNTER PROS-00-PCN-50	360	30	0.5		A/L104

SYMBOL	MANUFACTURER/MODEL	PSI	GPM	RADIUS	DETAIL
	HUNTER I-20-04-SS-PRB-SR 0.75	50	0.75	25'	K/L103
	HUNTER I-20-04-SS-PRB-SR 1.5	50	1.5	25'	K/L103
	HUNTER I-20-04-SS-PRB-SR 3.0	50	3	25'	K/L103
	HUNTER I-25-04-SS 07	60	7.5	48'	K/L103

SYMBOL	MANUFACTURER/MODEL/DESCRIPTION	DETAIL
	DRIP CONTROL KIT IRRITROL 700DK-1-MF	B/L104
	DRIP CONTROL KIT-LOW FLOW IRRITROL 700DK-075-LF	B/L104
	FLUSH VALVE ASSEMBLY	E/L104
	DRIP OPERATION INDICATOR HUNTER ECO-ID	F/L104
	AREA TO RECEIVE DRIPLINE NETAFIM TLCV-04-18 TECHLINE PRESSURE COMPENSATING LANDSCAPE DRIPLINE WITH CHECK VALVE. 0.4 GPH EMITTERS AT 18" O.C. DRIPLINE LATERALS SPACED AT 18" APART, WITH EMITTERS OFFSET FOR TRIANGULAR PATTERN. MINIMUM 3" COVER	C/L104

SYMBOL	MANUFACTURER/MODEL/DESCRIPTION	DETAIL
	EXISTING REMOTE CONTROL VALVE	/
	REMOTE CONTROL VALVE IRRITROL 100	I/L103
	QUICK COUPLER VALVE HUNTER-44RC WITH HK44 KEY AND HS2 HOSE SWIVEL	H/L103
	GATE VALVE LARGE LEEMCO LMV-BB PUSH-ON BELL ENDS, OR EQUAL (LARGE)	G/L103
	GATE VALVE SMALL NIBCO T-113-K, OR EQUAL(SMALL PIPE SIZE)	G/L103
	CONTROLLER HUNTER ACC-1200 WITH TWO, A2M-600 EXPANSION MODULES (24 TOTAL STATIONS). ACC-PED POWDER COATED PEDESTAL	J/L103
	WIRELESS RAIN/FREEZE SENSOR HUNTER WIRELESS SOLAR-SYNC. RAIN/FREEZE SENSOR (WSS-SEN). MOUNT ON WALL FASCIA/CAP OVER PLANTING BED	L/L103
	PERMANENT CAP WITH THRUST BLOCK	B/L103
	PULL BOX	M/L103
	IRRIGATION LATERAL LINE: PVC SCHEDULE 40, BELL END, SOLVENT WELD - SIZE AS NOTED	C/L103
	IRRIGATION MAINLINE: PVC CLASS 200 GASKETED - SIZE AS NOTED	A/L103
	PIPE SLEEVE: PVC SCHEDULE 40 TWICE PIPE SIZE	D/L103
# / #" #	VALVE NUMBER VALVE FLOW (GPM) VALVE SIZE	
	CONTROL WIRE SLEEVE	D/L103
	DRIPLINE MANIFOLD: PVC SCHEDULE 40	D/L104
	CONTROL WIRE PLUS ONE (1) COMMON WIRE	E/L103
#	NUMBER OF SPARE CONTROL WIRE PLUS ONE (1) SPARE COMMON WIRE. PROVIDE A 10 FOOT LOOP IN VALVE BOX	
+	PROPOSED TREE, SEE PLANTING PLAN ON SHEET L201 FOR VARIETY AND SIZE	
A	CONNECT NEW MAIN LINE TO EXISTING MAIN LINE	
B	PROTECT HEADS FROM HARDSCAPE IMPROVEMENTS.	
C	EXISTING RELOCATED MP ROTATOR (SEE DEMOLITION PLAN - SHEET - C201). ADJUST HEADS/NOZZLES FOR NEW IMPROVEMENTS. SEE GENERAL IRRIGATION NOTE #17	
E	CONNECT NEW LATERAL LINE TO EXISTING LATERAL LINE	
F	CONNECT EXISTING SPRINKLER ON NEW LATERAL LINE	
G	CONNECT EXISTING RELOCATED VALVE SCHEDULED TO REMAIN OPERATIONAL TO NEW MAIN LINE.	
H	PIPING SHOWN OUTSIDE OF PLANTING BED FOR CLARITY. INSTALL WITHIN PLANTING BED	

WATER CONSERVATION COMPLIANCE STATEMENT:

I HAVE COMPLIED WITH THE CRITERIA OF THE LANDSCAPE WATER CONSERVATION ORDINANCE AND GUIDELINES, AND HAVE APPLIED THEM FOR THE EFFICIENT USE OF WATER IN THE IRRIGATION DESIGN PLAN.

DAVID W. BRILEY, R.L.A 2787

IRRIGATION SYSTEM OBSERVATION LOG				
		REVIEWED & ACCEPTED BY OWNER'S REP OR LAND ARCH		
ITEM NO.	WORK ITEM DESCRIPTION	PRINT NAME	SIGNATURE	DATE
IR-1	EXISTING SYSTEM OPERATION & PRESSURE CHECK			
IR-2	PIPING/WIRE SLEEVES UNDER PAVEMENT			
IR-3	MAIN LINE INSTALLATION & PRESSURE TEST			
IR-4	VALVE INSTALLATIONS			
IR-5	IRRIGATION COVERAGE PRIOR TO PLANTING			
IR-6	CONTROL EQUIPMENT INSTALLATION			
IR-7	BOOSTER PUMP INSTALLATION & START-UP (MANUF.)	N/A	N/A	
IR-8	FINAL SYSTEM OPERATION REVIEW			

NOTE: THE ORIGINAL VERSION OF THIS LOG SHALL BE MAINTAINED ON THE AS-BUILT RECORD DRAWING SET.
WORK ITEMS MAY NOT BE REVIEWED IF PRIOR WORK ITEMS HAVE NOT BEEN ACCEPTED.

SCALE: N 1"=20'

0 5 20 40
SCALE IN FEET

SEE SHEET L102 FOR IRRIGATION PLAN AND NOTES AND L103 AND L104 FOR DETAILS

Know what's below. Call before you dig. 811

Blair, Church & Flynn CONSULTING ENGINEERS
401 Clovis Avenue, Suite 200
Clovis, California 93612
Tel (559) 326-1400
Fax (559) 326-1500

FOR BID ONLY

Public L&LP especially reserves its common law copyright and other property rights in these plans, ideas and designs. These plans are not to be incorporated herein, as an instrument of prior ownership by the author and may not be altered in any way for any other project without the prior written authorization

MARK	DATE	DESCRIPTION
	11/1/2022	DSA BACKCHECK

LANDSCAPE ARCHITECTS DAVID W. BRILEY 12/31/23 RENEWAL DATE STATE OF CALIFORNIA

TETER, LLP
FRESNO HEADQUARTERS
VISALIA | BAKERSFIELD | MODESTO | SAN LUIS OBISPO
ARCHITECTS ENGINEERS CONNECTED

TETER

TULARE CAMPUS CTE
COLLEGE OF THE SEQUOIAS
4999 E. BARDSLEY AVE.
TULARE, CA.

DRAWING TITLE
IRRIGATION PLAN

PROJECT NO.
20-12032

DRAWING
L101

Drawing © 2022 Public Landscape Architecture Engineering LLP. All rights reserved. Plot by: mmeyer Oct 28, 2022 - 4:24pm

PLOT DATE: 10/28/2022 4:24:39 PM

P:\221-0340\Site\productiondrawings\221340_Ir01.dwg

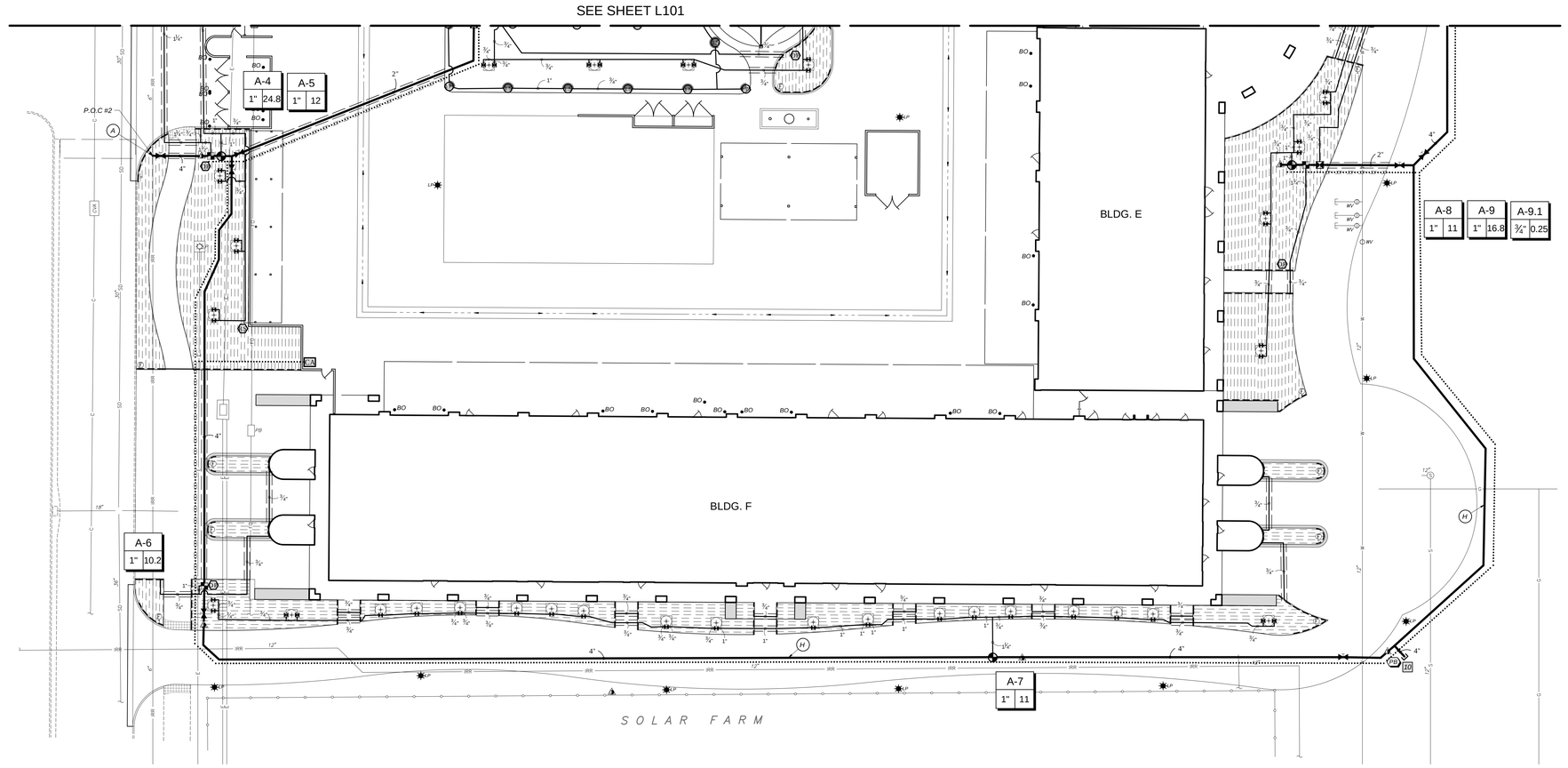

IRRIGATION LEGEND

NOTE: FLOW FOR AN ADJUSTABLE ARC NOZZLE IS BASED ON A HALF CIRCLE ARC

SYMBOL	MANUFACTURER/MODEL/DESCRIPTION	ARC	PSI	GPM	RADIUS	DETAIL
	EXISTING RELOCATED MP ROTATOR K HUNTER MP2000 PROS-06-PRS40-CV	90-210	40	0.77	19'	K/L103
	TREE BUBBLER HUNTER PROS-00-PCN-50	360	30	0.5		A/L104

SYMBOL	MANUFACTURER/MODEL	PSI	GPM	RADIUS	DETAIL
07A	HUNTER I-20-04-SS-PRB-SR 0.75	50	0.75	25'	K/L103
15A	HUNTER I-20-04-SS-PRB-SR 1.5	50	1.5	25'	K/L103
30A	HUNTER I-20-04-SS-PRB-SR 3.0	50	3	25'	K/L103
07	HUNTER I-25-04-SS 07	60	7.5	48'	K/L103

SYMBOL	MANUFACTURER/MODEL/DESCRIPTION	DETAIL
	DRIP CONTROL KIT IRRITROL 700DK-1-MF	B/L104
	DRIP CONTROL KIT-LOW FLOW IRRITROL 700DK-075-LF	B/L104
	FLUSH VALVE ASSEMBLY	E/L104
DP	DRIP OPERATION INDICATOR HUNTER ECO-ID	F/L104
	AREA TO RECEIVE DRIPLINE NETAFIM TLCV-04-18 TECHLINE PRESSURE COMPENSATING LANDSCAPE DRIPLINE WITH CHECK VALVE. 0.4 GPH EMITTERS AT 18" O.C. DRIPLINE LATERALS SPACED AT 18" APART, WITH EMITTERS OFFSET FOR TRIANGULAR PATTERN. MINIMUM 3" COVER	C/L104

SYMBOL	MANUFACTURER/MODEL/DESCRIPTION	DETAIL
	EXISTING REMOTE CONTROL VALVE	/
	REMOTE CONTROL VALVE IRRITROL 100	I/L103
	QUICK COUPLER VALVE HUNTER-44RC WITH HK44 KEY AND HS2 HOSE SWIVEL	H/L103
	GATE VALVE LARGE LEEMCO LMV-BB PUSH-ON BELL ENDS, OR EQUAL (LARGE)	G/L103
	GATE VALVE SMALL NIBCO T-113-K, OR EQUAL(SMALL PIPE SIZE)	G/L103
CA	CONTROLLER HUNTER A2C-1200 WITH TWO, A2M-600 EXPANSION MODULES (24 TOTAL STATIONS). ACC-PED POWDER COATED PEDESTAL	J/L103
WS	WIRELESS RAIN/FREEZE SENSOR HUNTER WIRELESS SOLAR-SYNC. RAIN/FREEZE SENSOR (WSS-SEN). MOUNT ON WALL FASCIA/CAP OVER PLANTING BED	L/L103
	PERMANENT CAP WITH THRUST BLOCK	B/L103
PB	PULL BOX	M/L103
	IRRIGATION LATERAL LINE: PVC SCHEDULE 40, BELL END. SOLVENT WELD - SIZE AS NOTED	C/L103
	IRRIGATION MAINLINE: PVC CLASS 200 GASKETED - SIZE AS NOTED	A/L103
	PIPE SLEEVE: PVC SCHEDULE 40 TWICE PIPE SIZE	D/L103
# / #" / #	VALVE NUMBER VALVE FLOW (GPM) VALVE SIZE	
	CONTROL WIRE SLEEVE	D/L103
	DRIPLINE MANIFOLD: PVC SCHEDULE 40	D/L104
	CONTROL WIRE PLUS ONE (1) COMMON WIRE	E/L103
#	NUMBER OF SPARE CONTROL WIRE PLUS ONE (1) SPARE COMMON WIRE. PROVIDE A 10 FOOT LOOP IN VALVE BOX	
+	PROPOSED TREE, SEE PLANTING PLAN ON SHEET L201 FOR VARIETY AND SIZE	
A	CONNECT NEW MAIN LINE TO EXISTING MAIN LINE	
B	PROTECT HEADS FROM HARDSCAPE IMPROVEMENTS.	
C	EXISTING RELOCATED MP ROTATOR (SEE DEMOLITION PLAN - SHEET - C201). ADJUST HEADS/NOZZLES FOR NEW IMPROVEMENTS. SEE GENERAL IRRIGATION NOTE #17	
E	CONNECT NEW LATERAL LINE TO EXISTING LATERAL LINE	
F	CONNECT EXISTING SPRINKLER ON NEW LATERAL LINE	
G	CONNECT EXISTING RELOCATED VALVE SCHEDULED TO REMAIN OPERATIONAL TO NEW MAIN LINE.	
H	PIPING SHOWN OUTSIDE OF PLANTING BED FOR CLARITY. INSTALL WITHIN PLANTING BED	

SCALE: N 1"=20'

0 5 20 40
SCALE IN FEET

SEE SHEET L101
FOR IRRIGATION
PLAN AND L103 AND
L104 FOR DETAILS

811 Know what's below. Call before you dig.

Blair, Church & Flynn
CONSULTING ENGINEERS
455 Clovis Avenue, Suite 200
Clovis, California 93612
Tel (559) 326-1400
Fax (559) 326-1500

FOR BID ONLY

Tetter, LLP expressly reserves its common law copyright and other property rights in these plans, ideas and designs. No plans, ideas, designs, or arrangements represented herein shall be used by any other project without the written authorization of Tetter, LLP.

MARK	DATE	DESCRIPTION
	11/1/2022	DSA BACKCHECK

TETER, LLP
FRESNO HEADQUARTERS
VISALIA | BAKERSFIELD | MODESTO | SAN LUIS OBISPO
ARCHITECTS ENGINEERS CONNECTED

TULARE CAMPUS CTE
COLLEGE OF THE SEQUOIAS
4999 E. BARDSLEY AVE.
TULARE, CA.

DRAWING TITLE
IRRIGATION PLAN

PROJECT NO.
20-12032

DRAWING
L102

Drawing: P:\221-0340\Site\productiondrawings\221340_Ir01.dwg, Layout: L102, By: JEFFLEB
Plot By: Jeffleb Nov 02, 2022 - 12:17pm

PLOT DATE: 11/2/2022 12:17:18 PM

P:\221-0340\Site\productiondrawings\221340_lrrd01.dwg

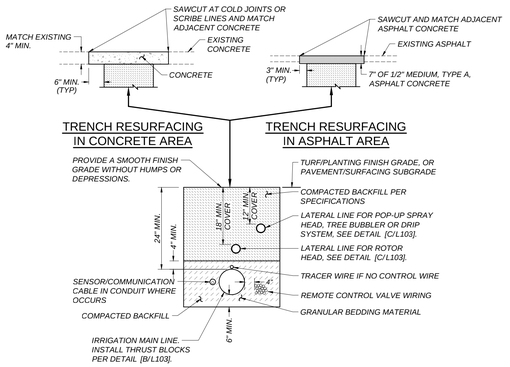

TYPICAL TRENCH SHOWN IN PLANTING AREA

A L103 IRRIGATION TRENCH BACKFILL
NOT TO SCALE

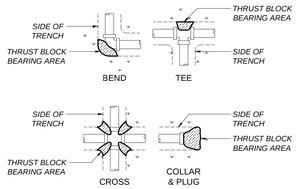

NOTE: CONCRETE PER SPECIFICATIONS. THRUST BLOCKS NOT REQUIRED WITH LESS THAN 2" MAIN LINE

TABLE OF BEARING AREAS REQUIRED (IN SQUARE FEET)

PIPE DIAMETER	" 4"	6"	8"	10"	12"
CROSS, TEE, 90° BEND, PLUG, FIRE HYDRANT	1	3	5	8	11
45° BEND	1	2	3	4	6
22-1/2° BEND	0.5	1	2	2	3
11-1/4° BEND	0	0	1	1	2
GATE VALVE (IN-LINE)	0	1	2.5	4	9

B L103 CONCRETE THRUST BLOCKS
NOT TO SCALE

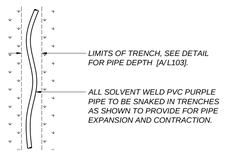

C L103 SOLVENT WELD PIPE
NOT TO SCALE

CONDUIT/SLEEVE FOR CONTROL WIRE

CONDUIT/SLEEVE SIZE	QTY. 14 GA. WIRE
1"	8 OR LESS
1-1/4"	15
1-1/2"	20
2"	32
2-1/2"	45
3"	70
4"	120

NOTE: SLEEVE FOR PIPE IS 2X THE PIPE DIAMETER

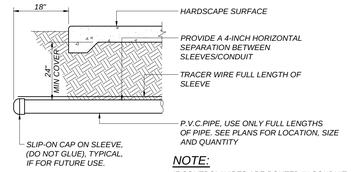

NOTE:
IF CONTROL WIRES ARE ROUTED IN CONDUIT, SLEEVE FOR WIRES IS NOT REQUIRED

D L103 IRRIGATION SLEEVE/CONDUIT
NOT TO SCALE

NOTES:
1. WIRES UNDER PAVEMENT OR WALKS SHALL BE INSTALLED WITHIN A CONDUIT WHICH HAS BEEN PLACED BY BORING, JACKING OR DRILLING. CONDUIT TO BE PVC SCH 40 TYPE II PIPE. WIRES SHALL NOT BE TAPED TOGETHER INSIDE THE CONDUIT.
2. NO SPLICES ARE ALLOWED BETWEEN POINTS OF CONNECTIONS.
3. A VALVE BOX MUST BE PROVIDED AT ALL UNDERGROUND SPLICE CONNECTIONS.
4. HOT - RED
COMMON - WHITE
SPARE HOT - BLACK
SPARE COMMON - BLUE
TRACER WIRE - GREEN

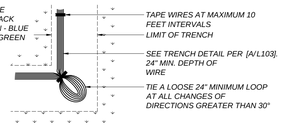

E L103 IRRIGATION WIRE
NOT TO SCALE

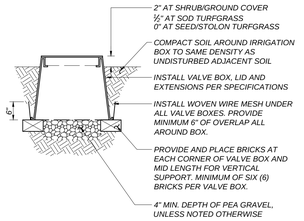

NOTE:
PROVIDE A TRAFFIC RATED CONCRETE BOX AND LID FOR ANY BOX LOCATED IN HARDSCAPE PAVEMENT AND SET FLUSH TO FINISHED SURFACE. PROVIDE A 6"X6" CONCRETE COLLAR AROUND THE BOX IF LOCATED IN ASPHALTIC CONCRETE.

F L103 IRRIGATION VALVE BOX
NOT TO SCALE

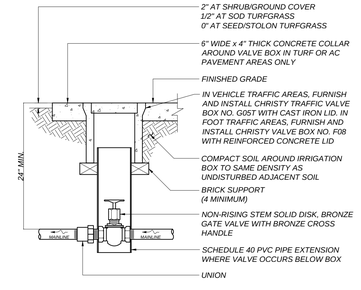

1-1/2" AND SMALLER GATE VALVE

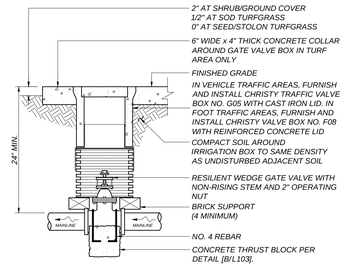

2" AND LARGER GATE VALVE

G L103 GATE VALVE
NOT TO SCALE

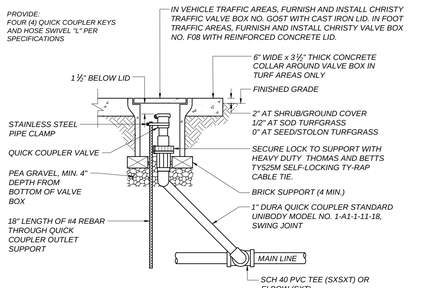

H L103 QUICK COUPLER VALVE
NOT TO SCALE

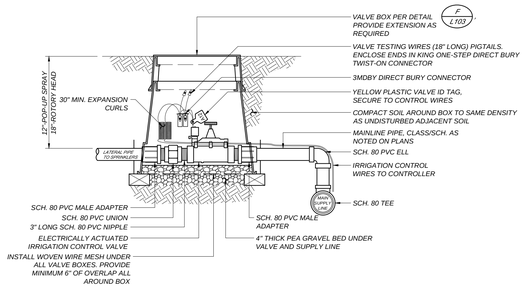

I L103 REMOTE CONTROL VALVE - GLOBE
NOT TO SCALE

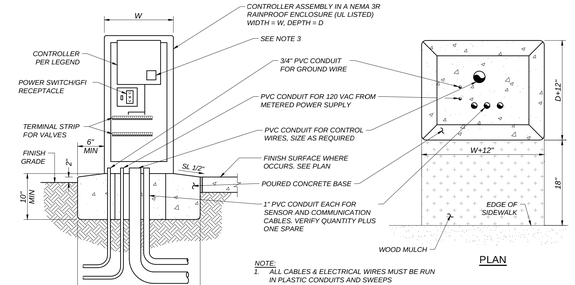

NOTE:
1. ALL CABLES & ELECTRICAL WIRES MUST BE RUN IN PLASTIC CONDUITS AND SWEEPS
2. PROVIDE GROUNDING PER MANUFACTURER'S SPECIFICATIONS AND A MINIMUM OF ONE GROUND ROD OR PLATE. INSTALL PER ASIC 100-2002 GUIDELINES

J L103 PEDESTAL CONTROLLER ASSEMBLY
NOT TO SCALE

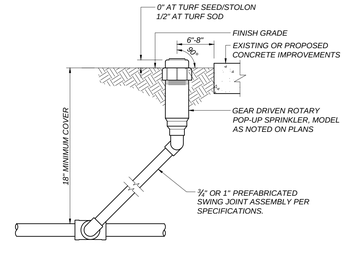

K L103 POP-UP ROTOR
NOT TO SCALE

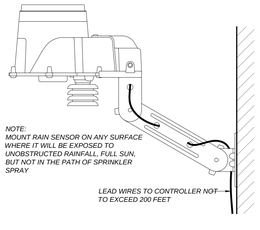

L L103 ESP-SMTE RAIN SENSOR
NOT TO SCALE

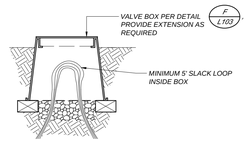

M L103 PULLBOX
NOT TO SCALE

GENERAL IRRIGATION NOTES:

1. ALL ITEMS IN THE LEGEND ARE TO BE FURNISHED AND INSTALLED, UNLESS NOTED OTHERWISE. THE CONTRACTOR SHALL FURNISH THE ARTICLES, EQUIPMENT, MATERIALS OR PROCESSES SPECIFIED BY NAME. NO SUBSTITUTION WILL BE ALLOWED WITHOUT PRIOR WRITTEN APPROVAL OF THE DESIGN ENGINEER. (ALL MATERIAL REQUIRED SHALL BE NEW AND OF THE BEST QUALITY AVAILABLE)
2. THE DESIGN ENGINEER RESERVES THE RIGHT TO REJECT ANY MATERIAL OR WORK WHICH DOES NOT CONFORM TO THE CONTRACT PLANS AND SPECIFICATIONS WITHOUT THE PRIOR WRITTEN APPROVAL OF THE DESIGN ENGINEER.
3. PRIOR TO STARTING WORK, THE CONTRACTOR SHALL VERIFY THE EXISTING SYSTEM COMPONENTS' LOCATION, SIZES AND ROUTING FOR BACKFLOW PREVENTERS, CONTROLLERS, MAIN AND LATERAL PIPING, VALVES, SPRINKLER HEADS AND CONTROL WIRE; AND SHALL CONFIRM THEIR OPERATIONAL STATUS IN THE PRESENCE OF THE OWNER'S REPRESENTATIVE. THE CONTRACTOR SHALL ALSO VERIFY THE AVAILABLE STATIC PRESSURE AT THE POINT-OF-CONNECTION. FAILURE TO NOTIFY THE OWNER'S REPRESENTATIVE BEFORE STARTING WORK OF ANY DEVIATION FROM THE INFORMATION SHOWN ON THE CONTRACT DOCUMENTS, OR NECESSARY REPAIRS TO THE EXISTING SYSTEM, SHALL MAKE THE CONTRACTOR RESPONSIBLE TO PROVIDE, AT HIS OWN EXPENSE, ANY CORRECTIVE WORK OR COMPONENTS NECESSARY FOR A FULLY FUNCTIONAL SYSTEM WITH FULL COVERAGE.
4. THE CONTRACTOR IS RESPONSIBLE TO PROTECT AND KEEP ANY EXISTING IRRIGATION SYSTEM SCHEDULED TO REMAIN OPERATIONAL AT ALL TIMES DURING THE COURSE OF THIS WORK. THE CONTRACTOR SHALL REPLACE ANY PLANTS DEAD OR DISTRESSED DUE TO THE INTERRUPTION OF EXISTING IRRIGATION SCHEDULES AND SHALL PERFORM ALL WORK NECESSARY TO MAINTAIN THE EXISTING SYSTEM'S OPERATIONAL.
5. THE CONTRACTOR IS RESPONSIBLE TO LOCATE AND PROTECT ALL EXISTING UTILITIES. UTILITIES SHOWN ARE FOR THE CONTRACTOR'S AWARENESS AND NO SURVEY HAS BEEN COMPLETE TO VERIFY THE ACCURACY OF THE UTILITIES SHOWN. IT IS THE CONTRACTORS RESPONSIBILITY TO REPAIR ANY DAMAGED UTILITIES CAUSED BY CONSTRUCTION ACTIVITIES.
6. THE CONTRACTOR SHALL BE RESPONSIBLE TO VERIFY ALL DIMENSIONS SHOWN AND TO ADJUST SAID DIMENSIONS TO FIT SITE CONDITIONS AND ACTUAL EQUIPMENT INSTALLED.
7. THE CONTRACTOR SHALL NOT WILLFULLY INSTALL THE IRRIGATION FACILITIES AS INDICATED ON THE DRAWINGS WHEN IT IS OBVIOUS IN THE FIELD THAT UNKNOWN OBSTRUCTIONS MIGHT NOT HAVE BEEN CONSIDERED IN THE DESIGN. SUCH OBSTRUCTIONS OR DIFFERENCES SHALL BE BROUGHT TO THE ATTENTION OF THE DESIGN ENGINEER.
8. THE IRRIGATION PLAN IS DIAGRAMMATIC. ALL PIPING, VALVES, AND HEADS SHALL BE LOCATED IN PLANTING AREAS WHENEVER POSSIBLE.
9. THE CONTRACTOR SHALL PROVIDE ADEQUATE SAFETY MEASURES TO WARN AND PROTECT THE PUBLIC, OTHER SITE CONTRACTORS AND HIS WORKERS FROM POSSIBLE INJURY DUE TO HIS CONSTRUCTION EQUIPMENT AND OPERATIONS.
10. DUE TO THE SCALE OF THE DRAWINGS, IT IS NOT POSSIBLE TO INDICATE ALL OFFSETS, FITTINGS, ETC. WHICH MAY BE REQUIRED. THE CONTRACTOR SHALL CAREFULLY INVESTIGATE THE STRUCTURAL AND FINISHED CONDITIONS AFFECTING ALL HIS WORK, AND PLAN HIS WORK ACCORDINGLY, FURNISHING SUCH FITTINGS, ETC., AS MAY BE REQUIRED TO INSTALL THE PROPOSED FACILITIES AND ACCOMODATE THE SITE CONDITIONS. DRAWINGS ARE GENERALLY DIAGRAMMATIC AND INDICATIVE OF THE WORK TO BE DONE TO PROVIDE A COMPLETE AND OPERATIONAL IRRIGATION SYSTEM. ALL WORK TO BE DONE IN ACCORDANCE WITH MANUFACTURER'S RECOMMENDATIONS, LOCAL CODES AND ORDINANCES.
11. VALVES SHALL BE LOCATED IN SHRUB/GROUND COVER AREAS INSTEAD OF IN TURFGRASS AREAS WHENEVER POSSIBLE. VALVES IN ATHLETIC SPORTS FIELDS SHALL BE LOCATED OUTSIDE OF THE FIELD-OF-PLAY TO THE GREATEST EXTENT POSSIBLE.
12. THE CONTRACTOR SHALL REPLACE ANY EXISTING PLANTS SCHEDULED TO REMAIN (SEE LANDSCAPE PLANS) THAT ARE DAMAGED BY THIS WORK WITH NEW PLANTS OF THE SAME SPECIES/VARIETY AND SIZE AS THE ORIGINAL.
13. ANY EXISTING TURFGRASS REMOVED FOR THIS WORK SHALL BE REPLANTED IF VIABLE, OR NEW SOD OF THE SAME SPECIES/VARIETY INSTALLED. THE UPPER 6 INCHES OF THE COMPACTED TRENCH BACKFILL SHALL BE CONDITIONED PER LANDSCAPE SPECIFICATIONS PRIOR TO SOD INSTALLATION. THE NEW SOD SURFACE SHALL BE FLUSH TO THE ADJACENT TURFGRASS WITHOUT HUMPS OR DEPRESSIONS.
14. INSTALL SLEEVES UNDER ALL ASPHALT/CONCRETE IMPROVEMENTS. SLEEVES SHALL BE PVC SCH. 40 PVC OR SDR 35 AND TWICE THE DIAMETER OF THE PIPE UNLESS OTHERWISE NOTED. CONTROL WIRING SHALL BE SLEEVED IN 2" SCH 40 PVC UNLESS OTHERWISE NOTED. MINIMUM DEPTH OF SLEEVES UNDER ALL ASPHALT/CONCRETE IMPROVEMENTS IS 18" BELOW SUBGRADE OR 24" BELOW FINISHED GRADE, WHICHEVER IS GREATER.
15. CONTRACTOR SHALL SAWCUT TO EXISTING JOINTS. REMOVE AND REPLACE SURFACING (CONCRETE, ASPHALT) AS NECESSARY TO INSTALL THE IRRIGATION SYSTEM.
16. THE CONTRACTOR SHALL PROVIDE AND KEEP AN UP-TO-DATE "RECORD DRAWING" SHOWING ALL CHANGES TO THE ORIGINAL DRAWINGS AND EXACT LOCATIONS OF THE FACILITIES INSTALLED. BEFORE FINAL INSPECTION, THE CONTRACTOR SHALL FURNISH MARKED "RECORD DRAWINGS" TO THE INSPECTOR.
17. THE CONTRACTOR SHALL PROVIDE ADJUSTMENT OF NOZZLE ARC AND RADIUS, INCLUDING ANY ALTERNATE NOZZLE TYPES, NECESSARY TO PROVIDE COMPLETE COVERAGE, TO SUIT ACTUAL SITE CONDITIONS, AND TO MINIMIZE OVERSPRAY ONTO HARDSCAPE, PAVEMENT AND/OR STRUCTURES.
18. CONCRETE ANCHORS OR THRUST BLOCKS SHALL BE PROVIDED ON ALL MAIN LINE PIPING. THEY ARE TO BE LOCATED AT ALL ABRUPT CHANGES IN PIPELINE GRADE, CHANGES IN HORIZONTAL ALIGNMENT, REDUCTION IN PIPE SIZES, END OF LINE AND IN-LINE VALVES TO ABSORB ANY AXIAL THRUST OF THE PIPE. THE PIPE MANUFACTURER'S RECOMMENDATIONS FOR THRUST CONTROL SHALL BE FOLLOWED. THRUST BLOCKS MUST BE FORMED AGAINST UNDISTURBED EARTH.
19. ALL MAIN LINE AND LATERAL LINE PIPES UNDER PAVEMENT SHALL BE PRESSURE TESTED WITH THE VALVES INSTALLED. THE CONTRACTOR SHALL PROVIDE ALL EQUIPMENT NEEDED. IF ANY LEAKS DEVELOP, THE REPAIRS ARE TO BE MADE AND THE TEST REPEATED UNTIL THE SYSTEM IS PROVEN WATERTIGHT. THE CONTRACTOR IS TO CENTER LOAD THE PIPE AND LEAVE ALL JOINTS EXPOSED FOR INSPECTION. THE PRESSURE TEST SHALL BE OBSERVED AND APPROVED BY THE OWNER'S REPRESENTATIVE. WHEN THE PIPE IS PROVEN WATERTIGHT AND ONLY THEN MAY THE LINE BE BACKFILLED.
20. WIRED CONNECTIONS BETWEEN THE CONTROLLER AND REMOTE CONTROL VALVES SHALL BE MADE WITH ONE CONTINUOUS DIRECT BURIAL WIRE RUN. A VALVE BOX MUST BE PROVIDED AT THE CONTRACTOR'S EXPENSE AT ALL UNDERGROUND SPLICES.
21. ONLY TEFLON TAPE OR AN APPROVED TEFLON PASTE MAY BE USED AS THE SEALING MATERIAL TO MAKE ALL THREADED CONNECTIONS. A MINIMUM OF TWO (2) WRAPS IN THE DIRECTION OF THE THREADS TO BE USED FOR TAPE. NO OTHER PIPE JOINT MATERIAL WILL BE ALLOWED WITHOUT THE WRITTEN AUTHORIZATION FROM THE DESIGN ENGINEER.
22. THE CONTRACTOR SHALL PROVIDE TWO (2) INDIVIDUALLY BOUND SETS OF OPERATION AND MAINTENANCE MANUALS. THE MANUAL SHALL CONTAIN THE FOLLOWING INFORMATION:
    A. CONTRACTOR'S ADDRESS AND PHONE NUMBER.
    B. DURATION OF GUARANTEE PERIOD (ONE YEAR AFTER FINAL ACCEPTANCE).
    C. NAMES, ADDRESSES AND PHONE NUMBERS OF LOCAL MANUFACTURER REPRESENTATIVES.
    D. COMPLETE SET OF MANUFACTURER'S LITERATURE AND SPECIFICATIONS.
    E. COMPLETE OPERATING AND MAINTENANCE INSTRUCTIONS ON ALL MAJOR EQUIPMENT.
    F. ISSUE A "CERTIFICATE OF CONSTRUCTION COMPLIANCE" WHICH STATES THAT ALL WORK DONE AND MATERIALS AND EQUIPMENT USED ARE IN CONFORMANCE WITH THE APPROVED PLANS, SPECIFICATIONS AND ALL AUTHORIZED REVISIONS.
    G. INITIAL ELECTRICAL DATA ON EACH VALVE:
        (1) OHMMS READING FOR EACH VALVE TAKEN AT THE CONTROLLER.
        (2) VOLTAGE READING FOR EACH VALVE TAKEN BOTH AT THE CONTROLLER AND AT THE VALVE.
23. THE CONTRACTOR SHALL PROVIDE TWO SETS OF CONTROLLER CHARTS. THE CHARTS TO BE A REDUCED DRAWING OF THE ACTUAL PLANS. THE CHARTS SHALL BE COLORED WITH A DIFFERENT COLOR FOR EACH IRRIGATION CIRCUIT. THE CHARTS SHALL BE COVERED IN A WATERTIGHT ENVELOPE.
24. IRRIGATION LINE TRENCHING AND PIPE INSTALLATION LOCATED WITHIN THE CANOPY DRIP LINE OF EXISTING TREES SHALL BE PERFORMED BY HAND OR BY AIR SPADE WITHOUT CUTTING OR DAMAGING EXISTING ROOTS GREATER THAN ONE INCH IN DIAMETER. SEE EXISTING LANDSCAPE PROTECTION SECTION FOR ADDITIONAL REQUIREMENTS.
25. REPLACE ALL DAMAGED EXISTING VALVE BOXES AND/OR LIDS WITHIN THE AREA OF WORK. ADJUST THE ELEVATION OF ALL EXISTING VALVE BOXES WITHIN THE AREA OF WORK TO FINISH GRADE AS NECESSARY TO COMPLY WITH THE VALVE BOX DETAIL.

SEE SHEET L101 FOR IRRIGATION PLAN AND L102 FOR IRRIGATION PLAN AND NOTES

Know what's below. Call before you dig.

Blair, Church & Flynn CONSULTING ENGINEERS
455 Clovis Avenue, Suite 200
Clovis, California 93612
Tel (559) 326-1400
Fax (559) 326-1500

FOR BID ONLY

Unless LEP expressly reserves its common law copyright and other property rights in these plans, ideas and designs incorporated herein, no one shall use all or any part of them for any other project without the written authorization of LEP.

MARK	DATE	DESCRIPTION
	11/1/2022	DSA BACKCHECK

TETER, LLP
FRESNO HEADQUARTERS
VISALIA | BAKERSFIELD | MODESTO | SAN LUIS OBISPO
ARCHITECTS ENGINEERS CONNECTED

TULARE CAMPUS CTE
COLLEGE OF THE SEQUOIAS
4999 E. BARDSLEY AVE.
TULARE, CA.

DRAWING TITLE
IRRIGATION DETAILS

PROJECT NO.
20-12032

DRAWING
L103

Drawing: P:\221-0340\Site\productiondrawings\221340_lrrd01.dwg Plot By: tylerallen Nov 02, 2022 - 12:17pm

PLOT DATE: 11/2/2022 12:17:43 PM

P:\221-0340\Site\productiondrawings\221340_lrrd01.dwg

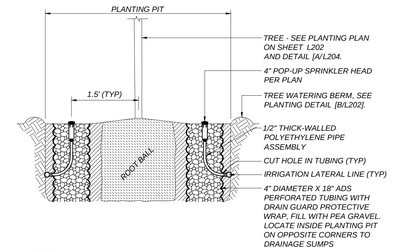

A / L104 TREE BUBBLERS
NOT TO SCALE

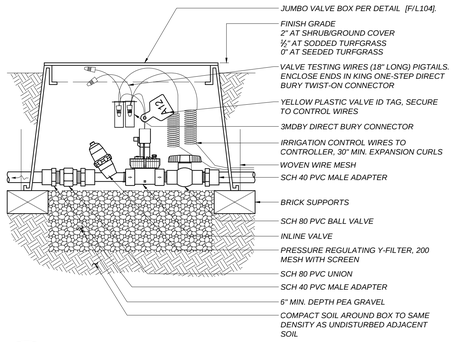

B / L104 DRIP ZONE ASSEMBLY
NOT TO SCALE

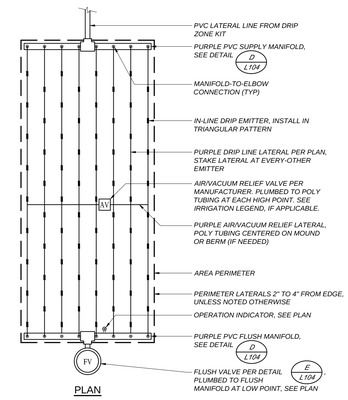

C / L104 DRIPLINE LAYOUT SCHEMATIC
NOT TO SCALE

DRIP SYSTEM IRRIGATION NOTES:

1. *ALL ITEMS, ACCESSORIES, FITTINGS, ETC. NECESSARY FOR A COMPLETE AND PROPERLY FUNCTIONING SUB-SURFACE DRIP SYSTEM ARE TO BE FURNISHED AND INSTALLED BY THE CONTRACTOR, UNLESS NOTED OTHERWISE.*
2. *THE EQUIPMENT AND COMPONENTS CALLED OUT ON THE DRAWING LEGEND ARE THE PREFERENCE OF THE OWNER AND ARE SELECTED TO MATCH EQUIPMENT AND COMPONENTS IN USE IN OTHER SIMILAR IRRIGATION SYSTEMS OF THE OWNER.*
3. *PRIOR TO STARTING WORK, THE CONTRACTOR SHALL VERIFY ANY EXISTING SYSTEM COMPONENTS' LOCATION, SIZES AND ROUTING FOR BACKFLOW PREVENTERS, CONTROLLERS, MAIN AND LATERAL PIPING, VALVES, SPRINKLER HEADS AND CONTROL WIRE; AND SHALL CONFIRM THEIR OPERATIONAL STATUS IN THE PRESENCE OF THE OWNER'S REPRESENTATIVE. THE CONTRACTOR SHALL ALSO VERIFY THE AVAILABLE STATIC PRESSURE AND AVAILABLE SAFE FLOW AT THE POINT-OF-CONNECTION. FAILURE TO NOTIFY THE OWNER'S REPRESENTATIVE AND THE ENGINEER BEFORE STARTING WORK, OF ANY DEVIATION FROM THE INFORMATION SHOWN ON THE CONTRACT DOCUMENTS OR NECESSARY REPAIRS TO THE EXISTING SYSTEM, SHALL MAKE THE CONTRACTOR RESPONSIBLE TO PROVIDE, AT HIS OWN EXPENSE, ANY CORRECTIVE WORK OR COMPONENTS NECESSARY FOR A FULLY FUNCTIONAL SYSTEM WITH FULL COVERAGE.*
4. *THE IRRIGATION PLAN IS DIAGRAMMATIC. ALL PIPING, VALVES, AND COMPONENTS SHALL BE LOCATED IN PLANTING AREAS, UNLESS NOTED OTHERWISE. VALVES SHALL BE LOCATED IN SHRUB/GROUND COVER AREAS INSTEAD OF IN TURFGRASS AREAS WHENEVER POSSIBLE.*
5. *INSTALL DRIP EMITTERS IN A TRIANGULAR OR STAGGERED PATTERN AND AT A CONSISTENT DEPTH BELOW GRADE AS SHOWN OR INDICATED IN THE DRAWINGS.*
6. *STAKE THE EMITTER TUBING USING THE MANUFACTURER'S RECOMMENDED STAKES DIRECTLY OVER EVERY OTHER EMITTER. FOR EXAMPLE, IF THE EMITTERS ARE SPACED AT 18 INCHES O.C., THEN STAKE AT 36 INCHES O.C.*
7. *PRIOR TO BACKFILLING THE DRIP TUBING AND THE START OF PLANTING OPERATIONS, THE SYSTEM SHALL BE REVIEWED FOR PROPER OPERATION BY THE OWNER'S REPRESENTATIVE.*
8. *PROGRAM THE CONTROLLER TO OPERATE THE CONTROL VALVE(S) FOR THE DRIP SYSTEM USING THE CONTROLLER'S "CYCLE AND SOAK" FEATURE IN ORDER TO APPLY THE REQUIRED WATER AMOUNT IN THREE EQUAL CYCLES.*
9. *PRIOR TO THE START OF PLANTING OPERATIONS, THE DRIP SYSTEM SHALL BE OPERATED FOR A FREQUENCY AND DURATION TO ADEQUATELY MOISTEN THE TOPSOIL TO A MINIMIM DEPTH OF 12 INCHES AT ANY LOCATION WITHIN THE PLANTING AREA .*
10. *THE CONTRACTOR SHALL PROVIDE ONE HUNDRED (100) FEET OF IN-LINE EMITTER TUBING OF THE SAME MODEL AS SPECIFIED, ENOUGH STAKES FOR THE 100 FEET, AND TEN (10) OF EACH TYPE OF FITTINGS USED ON THE PROJECT FOR THE OWNER'S USE AS SPARE PARTS.*
11. *IT IS THE CONTRACTOR'S RESPONSIBILITY TO KEEP ANY EXISTING IRRIGATION SYSTEM SCHEDULED TO REMAIN OPERATIONAL AT ALL TIMES DURING THE COURSE OF THIS WORK. THE CONTRACTOR SHALL REPLACE ANY PLANTS DEAD OR DISTRESSED DUE TO THE INTERRUPTION OF EXISTING IRRIGATION SCHEDULES, AND SHALL PERFORM ALL WORK NECESSARY TO MAINTAIN THE EXISTING SYSTEM'S OPERATION.*
12. *THE CONTRACTOR SHALL REPLACE ANY EXISTING PLANTS SCHEDULED TO REMAIN THAT ARE DAMAGED BY THIS WORK WITH NEW PLANTS OF THE SAME SPECIES/VARIETY AND SIZE AS THE ORIGINAL PRIOR TO THE START OF WORK. ANY EXISTING TURFGRASS REMOVED FOR THIS WORK SHALL BE REPLANTED IF VIABLE, OR NEW SOD OF THE SAME SPECIES/VARIETY INSTALLED. THE UPPER 6 INCHES OF THE COMPACTED TRENCH BACKFILL SHALL BE CONDITIONED PER THE PLANTING SPECIFICATIONS PRIOR TO SOD INSTALLATION. THE NEW SOD SURFACE SHALL BE FLUSH TO THE ADJACENT TURFGRASS WITHOUT HUMPS OR DEPRESSIONS.*

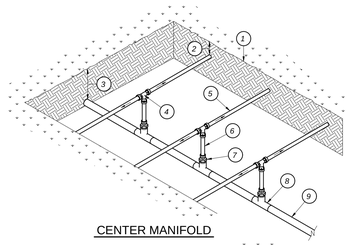

CENTER MANIFOLD

LEGEND:

1. *FINISH GRADE*
2. *DEPTH OF TUBING BELOW FINISHED GRADE - SEE LEGEND*
3. *MIN. 12" DEPTH OF PVC SUPPLY / FLUSH MANIFOLD BELOW FINISHED GRADE*
4. *ELBOW*
5. *DRIPLINE LATERAL, SEE PLAN*
6. *POLY TUBING, LENGTH AS NECESSARY*
7. *MALE ADAPTER*
8. *SCH 40 PVC TEE (SxSxT) WITH 1/2" FPT OUTLET*
9. *SCH 40 PVC SUPPLY MANIFOLD FROM DRIP ZONE KIT*

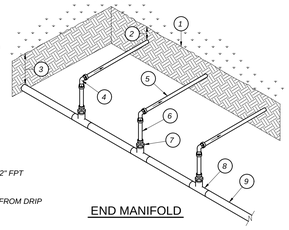

END MANIFOLD

D / L104 DRIPLINE MANIFOLD
NOT TO SCALE

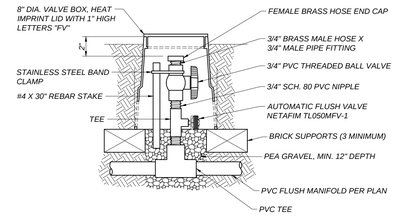

E / L104 DRIPLINE FLUSH VALVE
NOT TO SCALE

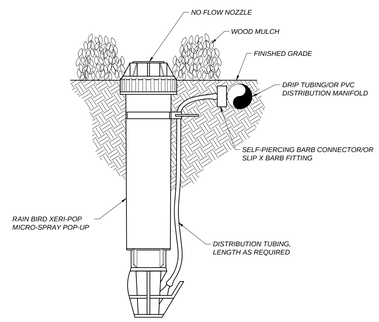

F / L104 DRIP SYSTEM OPERATION INDICATOR
NOT TO SCALE

CONTRACTOR SPECIAL IRRIGATION NOTES:

1. *THE CONTRACTOR SHALL PERFORM AN OPERATIONAL ASSESSMENT OF THE EXISTING IRRIGATION SYSTEM WITHIN THE AREA OF WORK WITH THE OWNER'S REPRESENTATIVE PRIOR TO THE START OF CONSTRUCTION OPERATIONS.*
2. *THE CONTRACTOR SHALL ENSURE THAT ALL EXISTING PLANTING SCHEDULED TO REMAIN SHALL CONTINUE TO BE IRRIGATED THROUGHOUT THE COURSE OF CONSTRUCTION OPERATIONS. ANY DAMAGE TO THE EXISTING IRRIGATION SYSTEM THAT IMPACTS EXISTING PLANTING TO REMAIN SHALL BE IMMEDIATELY REPAIRED TO THE OWNER'S SATISFACTION.*
3. *PRIOR TO THE START OF ANY SHRUB, GROUND COVER, AND/OR TURFGRASS PLANTING, AN OPERATIONAL REVIEW OF THE IRRIGATION SYSTEM SHALL BE PERFORMED FOR PROPER COVERAGE AND SOIL MOISTURE DEPTH BY THE OWNER'S REPRESENTATIVE. ALL CORRECTIONS AND/OR ADJUSTMENTS SHALL BE COMPLETED AND VERIFIED BY THE OWNER'S REPRESENTATIVE BEFORE GROUND LEVEL PLANTING MAY COMMENCE.*
4. *THE ORIGINAL IRRIGATION SYSTEM OBSERVATION LOG SHALL BE MAINTAINED ON THE AS-BUILT RECORD DRAWING SET.*
5. *THE AS-BUILT RECORD DRAWING SET AND OTHER CLOSE-OUT ITEMS SHALL BE SUBMITTED AND ACCEPTED PRIOR TO THE SCHEDULING OF A FINAL ACCEPTANCE REVIEW.*
6. *UNLESS NOTED OTHERWISE, SALVAGE AND RETURN TO THE OWNER ALL IRRIGATION VALVES, HEADS AND OTHER EQUIPMENT COMPONENTS REMOVED AS PART OF THE WORK. SALVAGED COMPONENTS SHALL BE CLEAN AND IN WORKING CONDITION UNLESS NOTED AS NON-OPERATIONAL DURING THE OPERATIONAL ASSESSMENT.*

SEE SHEET L101
FOR IRRIGATION PLAN
AND L102 FOR
IRRIGATION PLAN
AND NOTES

Know what's below. Call before you dig.

Blair, Church & Flynn
CONSULTING ENGINEERS
455 Clovis Avenue, Suite 200
Clovis, California 93612
Tel (559) 326-1400
Fax (559) 326-1500

FOR BID ONLY

Tetter, LLP expressly reserves its common law copyright and other property rights in these plans, ideas and designs. No plans, ideas, designs or specifications prepared by us are to be changed or copied in any form or manner whatsoever, nor are they to be assigned to any third party, for any other project without the written authorization of Tetter, LLP.

MARK	DATE	DESCRIPTION
	11/1/2022	DSA BACKCHECK

TETTER, LLP
FRESNO HEADQUARTERS
VISALIA | BAKERSFIELD | MODESTO | SAN LUIS OBISPO
ARCHITECTS ENGINEERS CONNECTED

TETTER

TULARE CAMPUS CTE
COLLEGE OF THE SEQUOIAS
4999 E. BARDSLEY AVE.
TULARE, CA

DRAWING TITLE
IRRIGATION DETAILS

PROJECT NO.
20-12032

DRAWING
L104

Drawing: P:\221-0340\Site\productiondrawings\221340_lrrd01.dwg | L104.dwg | 11/2/2022 12:17:47 PM | PDF by Vantage

PLOT DATE: 11/2/2022 12:17:47 PM

P:\221-0340\Site\productiondrawings\221340_la01.dwg

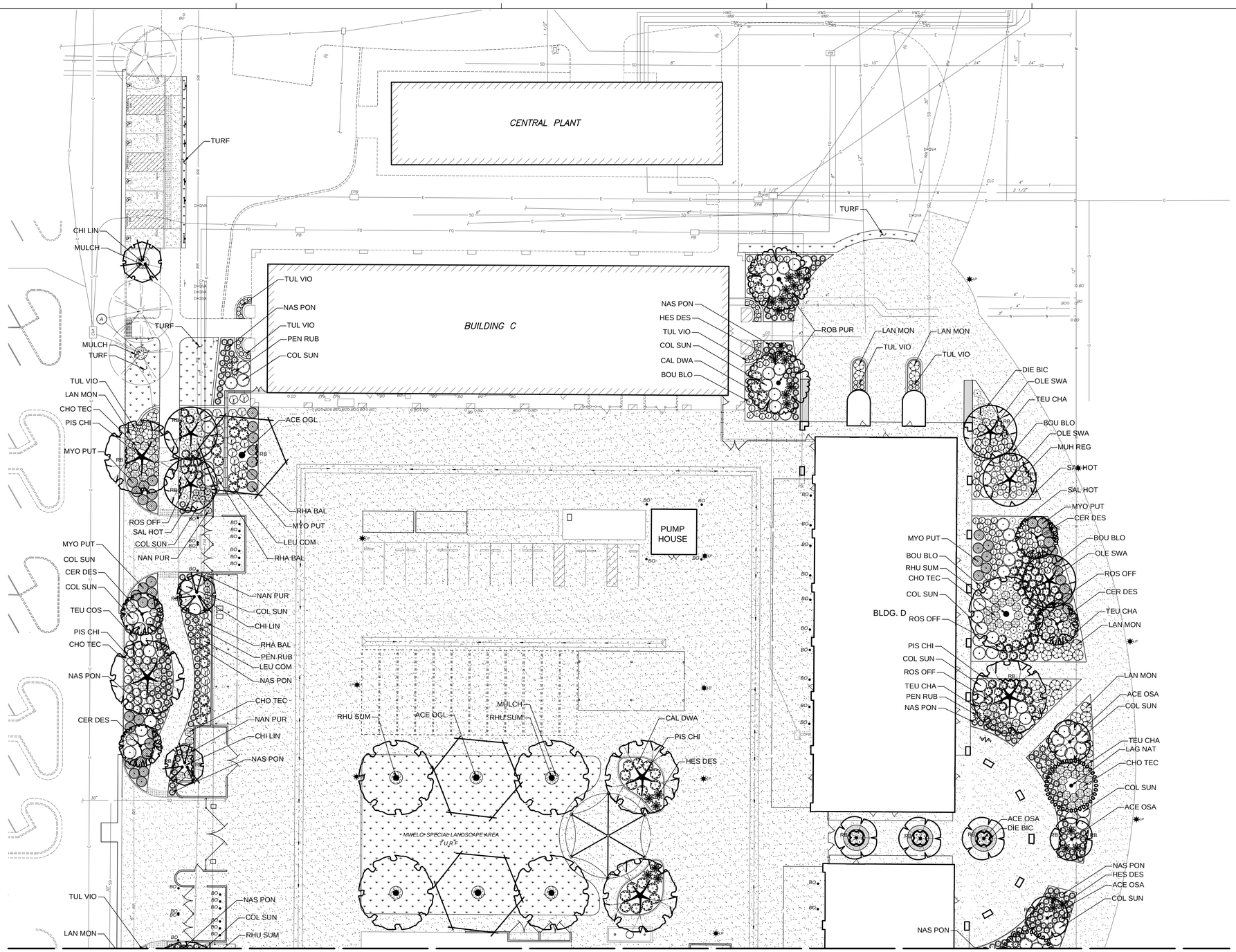

SEE SHEET L202

LANDSCAPE SHADE CALCULATIONS	SHADING PER CALGREEN 5.106.12		
SITE SHADING - LANDSCAPE & HARDSCAPE	**QUANTITY PROPOSED (SF)**	**PERCENT REQUIRED**	**SHADE AREA REQUIRED (SF)**
LANDSCAPED AREA (EXCLUDING SPECIAL USE & PARKING LANDSCAPE AREAS)	25,014	20	5,003
UNCOVERED HARDSCAPE AREA (EXCLUDING PARKING HARDSCAPE AREAS)	114,311	20	22,862
TOTAL SITE SHADE REQUIRED			27,865
PROVIDED SHADE TREES	**PROVIDED SHADE AREA**	**NO. TREES**	
VERY LARGE (40' dia.= 1256 SF)	3,768	3	
LARGE (35' dia.= 962 SF)	15,392	16	
MEDIUM (30' dia.= 707 SF)	4,949	7	
SMALL (20' dia.= 314 SF)	5,024	16	
TOTALS	29,133	42	
OVER (UNDER) LANDSCAPE & HARDSCAPE SHADE REQUIREMENT			**1,268**
PARKING LOT SHADING	**QUANTITY PROPOSED (SF)**	**PERCENT REQUIRED**	**SHADE AREA REQUIRED (SF)**
PARKING LOT STALLS & AISLES	1,500	50	750
PARKING LOT LANDSCAPE	0	20	0
PARKING LOT HARDSCAPE	642	20	128
TOTAL PARKING SHADE REQUIRED			878
PROVIDED SHADE TREES - PARKING LOT AREA	**PROVIDED SHADE AREA**	**NO. TREES**	
VERY LARGE (40' dia.= 1256 SF)	0	0	
LARGE (35' dia.= 962 SF)	0	0	
MEDIUM (30' dia.= 707 SF)	707	1 (E)	
SMALL (20' dia.= 314 SF)	314	1	
TOTALS	1,021	2	
OVER (UNDER) PARKING LOT SHADE REQUIREMENT			**143**

LANDSCAPE PLANTING AREA REQUIREMENT (DSA 1-L)	AREA (SF)
NEW BUILDING FOOTPRINT:	41,000
REQUIRED MWELO COMPLIANT PLANTING:	30,750
EXISTING IRRIGATED AREA DESIGNATED FOR REMOVAL:	7,509
PROPOSED MWELO COMPLIANT PLANTING:	25,014
TOTAL CREDIT FOR MWELO COMPLIANT PLANTING:	32,523
EXCESS / (DEFICIT) OF PROPOSED COMPLIANT PLANTING:	1,773

WATER CONSERVATION COMPLIANCE STATEMENT:

I HAVE COMPLIED WITH THE CRITERIA OF THE LANDSCAPE WATER CONSERVATION ORDINANCE AND GUIDELINES, AND HAVE APPLIED THEM FOR THE EFFICIENT USE OF WATER IN THE PLANTING DESIGN PLAN.

DAVID W. BRILEY, R.L.A. 2787

SCALE: N 1"=20'

0 5 20 40

SCALE IN FEET

SEE SHEET L202 FOR PLANTING PLAN AND L204 FOR NOTES AND DETAILS

811 Know what's below. Call before you dig.

Blair, Church & Flynn CONSULTING ENGINEERS
451 Clovis Avenue, Suite 200
Clovis, California 93612
Tel (559) 326-1400
Fax (559) 326-1500

FOR BID ONLY

Blair, Church & Flynn, LLP expressly reserves its common law copyright and other property rights in these plans, ideas and designs. These plans, ideas and designs are not to be changed or copied in any form or manner whatsoever nor are they to be assigned to any third party, nor shall any exclusivity be granted to any third party without first obtaining the express written authorization of Blair, Church & Flynn, LLP.

MARK	DATE	DESCRIPTION
	11/1/2022	DSA BACKCHECK

LANDSCAPE ARCHITECT — BRILEY — DAVID W. BRILEY — 12/31/22 — RENEWAL DATE — STATE OF CALIFORNIA

TETER, LLP

ARCHITECTS ENGINEERS CONNECTED

FRESNO HEADQUARTERS
VISALIA | BAKERSFIELD | MODESTO | SAN LUIS OBISPO

TETER

TULARE CAMPUS CTE
COLLEGE OF THE SEQUOIAS
4999 E. BARDSLEY AVE.
TULARE, CA.

DRAWING TITLE
PLANTING PLAN

PROJECT NO.
20-12032

DRAWING
L201

PLOT DATE: 11/2/2022 12:18:34 PM

Drawing: P:\221-0340\Site\productiondrawings\221340_la01.dwg Plotted By: davidwi Nov 02, 2022 - 12:18pm

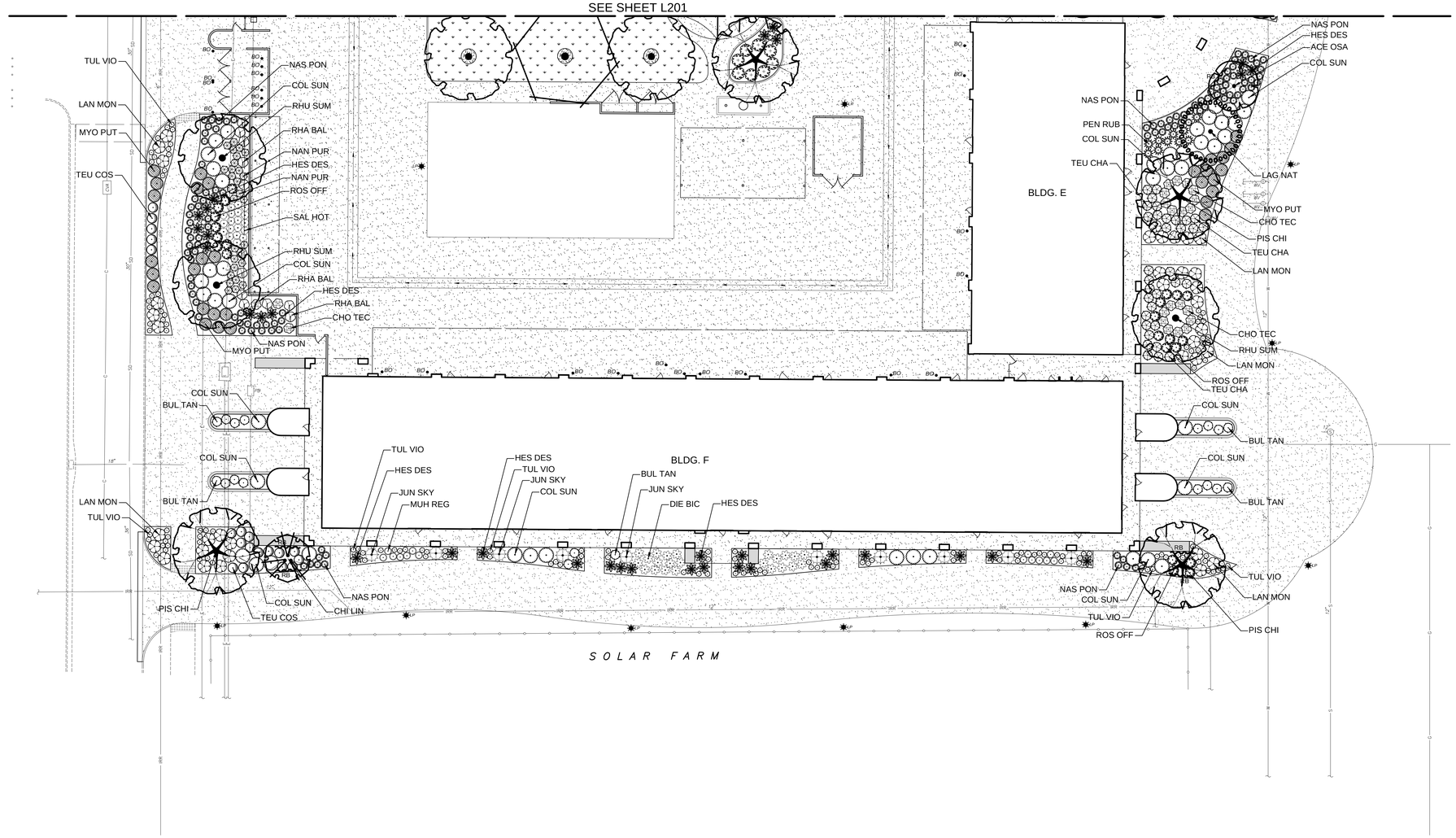

SCALE: N 1"=20'

0 5 20 40
SCALE IN FEET

SEE SHEET L203
FOR PLANTING
LEGEND AND L204
FOR NOTES AND
DETAILS

811 Know what's below. Call before you dig.

Blair, Church & Flynn
CONSULTING ENGINEERS
451 Clovis Avenue, Suite 200
Clovis, California 93612
Tel (559) 326-1400
Fax (559) 326-1500

FOR BID ONLY

Tetter, LLP expressly reserves his commonlaw copyright and other property rights in these plans. This document, the ideas and designs incorporated herein, as an instrument of professional service, is not to be used in whole or in part, for any other project without prior written authorization.

MARK	DATE	DESCRIPTION
	11/1/2022	DSA BACKCHECK

LICENSED LANDSCAPE ARCHITECT
W. BRILEY NO. 3174
12/31/22
Renewal Date
STATE OF CALIFORNIA

TETER, LLP
FRESNO HEADQUARTERS
VISALIA | BAKERSFIELD | MODESTO | SAN LUIS OBISPO
ARCHITECTS ENGINEERS CONNECTED

TETER

TULARE CAMPUS CTE
COLLEGE OF THE SEQUOIAS
4999 E. BARDSLEY AVE.
TULARE, CA

DRAWING TITLE
PLANTING PLAN

PROJECT NO.
20-12032

DRAWING
L202

P:\221-0340\Site\productiondrawings\221340_la01.dwg

PLOT DATE: 11/2/2022 12:18:51 PM

P:\221-0340\Site\productiondrawings\221340_la01.dwg

PLANT LEGEND

SUNSET ZONE # 8 — TOTAL MIXED PLANTING AREA =25,014 SF

2022-10-25 09:57

TREES	CODE	BOTANICAL / COMMON NAME	CONT	WATER USE	QTY	DETAIL	REMARKS (SIZE, FORM, SHADE, SIZE, EXPOSURE)
	ACE OSA	ACER PALMATUM `OSAKAZUKI` OSAKAZUKI JAPANESE MAPLE	15 GAL	M	6	A/L204	DECIDUOUS MULTI-TRUNK. ORANGE-CRIMSON FALL COLOR. MS: 20'-25' X 20'-25'
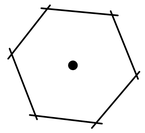	ACE OGL	ACER RUBRUM `OCTOBER GLORY` OCTOBER GLORY RED MAPLE	24"BOX	M	3	A/L204	DECIDUOUS STANDARD FORM. VERY LARGE SHADE.
	CER DES	CERCIDIUM X 'DESERT MUSEUM' DESERT MUSEUM PALO VERDE	24"BOX	L	4	A/L204	DECIDUOUS.YELLOW FLOWERS. LOW BRANCHING. MS: 25' X 15'-20'
	CHI LIN	CHILOPSIS LINEARIS DESERT WILLOW	15 GAL	L	4	A/L204	DECIDUOUS. STANDARD FORM MS: 30` H X 10'-20` W
	LAG NAT	LAGERSTROEMIA `NATCHEZ` NATCHEZ CRAPE MYRTLE	15 GAL	M	2	A/L204	DECIDUOUS. STANDARD FORM. PARTIAL SHADE. SMALL SHADE. MS: 25' X 25'
	OLE SWA	OLEA EUROPAEA 'SWAN HILL' TM SWAN HILL OLIVE	24"BOX	L	5	A/L204	EVERGREEN. BLUISH GREEN OR SILVER OR GRAY. MS: 30' X 20'-30'
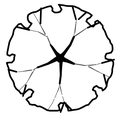	PIS CHI	PISTACIA CHINENSIS `KEITH DAVEY` KEITH DAVEY CHINESE PISTACHE	15 GAL	L	8	A/L204	DECIDUOUS. FULL SUN. STANDARD FORM. LARGE SHADE. MS: 25'-40' X 25'-35'
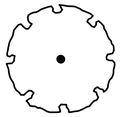	RHU SUM	RHUS LANCEA AFRICAN SUMAC	24"BOX	L	8	A/L204	EVERGREEN. LARGE SHADE. MS: 30' X 20'-35'
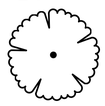	ROB PUR	ROBINIA X AMBIGUA 'PURPLE ROBE' PINK FLOWERING LOCUST	24"BOX	L	2	A/L204	DECIDUOUS. MEDIUM SHADE. MS: 40' X 20'-30'

	CODE	BOTANICAL / COMMON NAME	CONT	WATER USE	QTY	DETAIL	REMARKS
	MUH REG	MUHLENBERGIA CAPILLARIS `REGAL MIST` PINK MUHLY	5 GAL	L	41	B/L204	MS: 3'-4' X 2'-3'
	NAS PON	NASSELLA TENUISSIMA `PONY TAILS` MEXICAN FEATHERGRASS	1 GAL	L	266	B/L204	MS: 2` X 2`-3`
	PEN RUB	PENNISETUM ADVENA `RUBRUM` PURPLE FOUNTAIN GRASS	5 GAL	L	27	B/L204	FULL SUN MS: 4'-5' X 3'-4'

GROUND COVERS	CODE	BOTANICAL / COMMON NAME	CONT	WATER USE	QTY	DETAIL	REMARKS
	TURF	'CELEBRATION' BERMUDAGRASS	SOD	M	9,175 SF	E/L204	
	MULCH	WALK-ON WOOD MULCH	N/A	N/A	225 SF		
RB		ROOT BARRIER UB24-2				D/L204	
A		PROTECT EXISTING TREE IN PLACE. TPZ PER SECTION 320190					

SHRUBS	CODE	BOTANICAL / COMMON NAME	SIZE	WATER USE	QTY	DETAIL	REMARKS
	BUL TAN	BULBINE FRUTESCENS 'TINY TANGERINE' TINY TANGERINE BULBINE	5 GAL	L	19	B/L204	FULL SUN, PART SHADE. MS: 1'-2' X 3'-4'
	CAL DWA	CALLISTEMON VIMINALIS `LITTLE JOHN` DWARF WEEPING BOTTLEBRUSH	1 GAL	L	23	B/L204	MS: 3' X 5'
	CHO TEC	CHONDROPETALUM TECTORUM SMALL CAPE RUSH	1 GAL	L	80		SUN OR SHADE. DENSE TUFTED SMALL CLUSTERS OF BROWN FLOWERS. MS:3'-4' H X 3'-4' W
	COL SUN	COLEONEMA PULCHELLUM 'SUNSET GOLD' SUNSET GOLD BREATH OF HEAVEN	5 GAL	L	118	B/L204	FULL SUN TO PART SHADE. MS: 2' X 4'-6'
	DIE BIC	DIETES BICOLOR FORTNIGHT LILY	5 GAL	L	39	B/L204	FULL SUN, PART SHADE. WHITE FLOWERS. MS:2'-4' X 2'-3'
	HES DES	HESPERALOE PARVIFLORA 'DESERT FLAMENCO' TM DESERT FLAMENCO RED YUCCA	5 GAL	L	53	B/L204	SALMON, CORAL FLOWERS MS:2'-4' X 2'-5'
	JUN SKY	JUNIPERUS SCOPULORUM 'SKYROCKET' SKYROCKET JUNIPER	15 GAL	L	10	B/L204	EVERGREEN. MS: 15'-20' X 2'-3'
	LAN MON	LANTANA MONTEVIDENSIS TRAILING LANTANA	1 GAL	L	65	B/L204	FULL SUN TO PART SUN. LILAC FLOWES MS:1'-2' X 3'-5'
	LEU COM	LEUCOPHYLLUM FRUTESCENS `COMPACTA` COMPACT TEXAS RANGER	5 GAL	L	16	B/L204	MATURE HEIGHT & SPREAD: 5` X 5`
	MYO PUT	MYOPORUM PARVIFOLIUM 'PUTAH CREEK' PUTAH CREEK MYOPORUM	1 GAL	L	87	B/L204	MS: 1` X 8`
	NAN PUR	NANDINA DOMESTICA 'NANA PURPUREA' DWARF HEAVENLY BAMBOO	5 GAL	L	46	B/L204	FULL SUN, PARTIAL SUN. MS: 1'-2' X 2'-3'
	RHA BAL	RHAPHIOLEPIS UMBELLATA `MINOR` MINOR YEDDA HAWTHORN	5 GAL	L	36	B/L204	MATURE HEIGHT & SPREAD: 3`-4` X SAME
	ROS OFF	ROSMARINUS OFFICINALIS `COLLINGWOOD INGRAM` COLLINGWOOD INGRAM ROSEMARY	5 GAL	L	88	B/L204	FULL SUN. DARK BLUE FLOWERS. MS: 2'-3' X 4'
	SAL HOT	SALVIA MICROPHYLLA 'HOT LIPS' HOT LIPS GRAHAM SAGE	5 GAL	L	63	B/L204	FULL SUN TO PARTIAL SHADE. RED FLOWERS MS:2'-3' X 2'-3'
	TEU CHA	TEUCRIUM CHAMAEDRYS GERMANDER	5 GAL	L	82	B/L204	FULL SUN. MS: 3' X 3'
	TEU COS	TEUCRIUM COSSONII CREEPING GERMANDER	5 GAL	L	45	B/L204	FULL SUN.PINK OR PURPLE FLOWERS. MS: 4"-6" X 2'-4'
	TUL VIO	TULBAGHIA VIOLACEA SOCIETY GARLIC	1 GAL	L	196	B/L204	MS: 1'-3' X 1'-2'

GRASSES	CODE	BOTANICAL / COMMON NAME	SIZE	WATER USE	QTY	DETAIL	REMARKS
	BOU BLO	BOUTELOUA GRACILIS 'BLONDE AMBITION' BLONDE AMBITION BLUE GRAMA	5 GAL	L	103	B/L204	MS: 12"-36" X 12"-36"

SEE SHEET L201 AND L202 FOR PLANTING PLAN AND L204 FOR NOTES AND DETAILS

Know what's below. Call before you dig. 811

Blair, Church & Flynn
CONSULTING ENGINEERS
465 Clovis Avenue, Suite 200
Clovis, California 93612
Tel (559) 326-1400
Fax (559) 326-1500

FOR BID ONLY

These plans, LAD's approach, and designs are the property and copyright of Teter, LLP and other parties. These plans, LAD's approach, and designs are not to be used in whole or in part, for any other project without the written authorization of Teter, LLP.

MARK	DATE	DESCRIPTION
	11/1/2022	DSA BACKCHECK

LANDSCAPE ARCHITECT — BRILEY — 12/31/23 — RENEWAL DATE — STATE OF CALIFORNIA

TETER, LLP
FRESNO HEADQUARTERS
VISALIA | BAKERSFIELD | MODESTO | SAN LUIS OBISPO
ARCHITECTS ENGINEERS CONNECTED

TETER

TULARE CAMPUS CTE
COLLEGE OF THE SEQUOIAS
4999 E. BARDSLEY AVE.
TULARE, CA

DRAWING TITLE
PLANTING PLAN

PROJECT NO.
20-12032

DRAWING
L203

Drawing: P:\221-0340\Site\productiondrawings\221340_la01.dwg, 11/2/2022 12:19:02 PM, Plotted by: bdelaney

PLOT DATE: 11/2/2022 12:19:02 PM

P:\221-0340\Site\production\drawings\221340_iad01.dwg

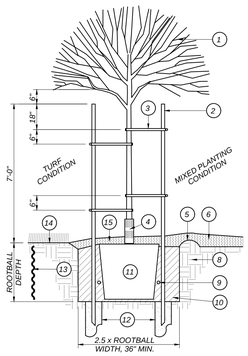

LEGEND:

1. *TREE PER PLANTING PLAN.*
2. *2" X 10' LODGEPOLE PINE STAKE. DO NOT DRIVE STAKE THROUGH ROOTBALL. CUT OFF TOP SECTION DAMAGED BY HAMMERING. TOP OF STAKE IS 6" CLEAR OF LOWEST TREE BRANCHES.*
3. *FLEXIBLE VINYL TREE TIE, 4 / TREE (V.I.T. OR APPROVED EQUAL.)*
4. *TREE TRUNK PROTECTOR (GRAY) WHERE TREE IS IN TURF AREA.*
5. *4" HIGH WATERING BERM.*
6. *ADJACENT PLANTING AREA WITH MULCH WHERE OCCURS.*
7. *FINISH GRADE.*
8. *SITE SOIL.*
9. *PLANT FERTILIZER TABLET. SEE SPECIFICATIONS.*
10. *AMENDED BACKFILL. SEE SPECIFICATIONS.*
11. *ROOTBALL. SET TOP OF ROOTBALL 2" ABOVE FINISH GRADE.*
12. *DRAINAGE SUMP: 12" DIA. PER DRAINAGE SUMP NOTES. FILL WITH CONCRETE SAND PER SSPWC 200-1.5.5.*
13. *ROOT CONTROL BARRIER WHERE REQUIRED. SEE GENERAL PLANTING NOTES AND DETAIL [B/L204].*
14. *ADJACENT TURFGRASS PLANTING WHERE OCCURS.*
15. *MULCH, MINIMUM 3" DEPTH. SEE GENERAL PLANTING NOTE 17.*

DRAINAGE SUMP NOTES:

A. DRAINAGE SUMPS SHALL PENETRATE THROUGH AND BEYOND ANY UNDERLYING PAVEMENT OR HARDPAN SOIL STRATUM, AND SUCH PAVEMENT OR HARDPAN MATERIAL SHALL BE REMOVED FROM THE SUMP HOLES.

B. THE SUMP HOLE SHALL BE DRILLED TO MINIMUM DEPTH OF TEN (10) FEET, UNLESS VISUAL EVIDENCE OF A SUBSURFACE SAND AND/OR GRAVEL DRAINAGE STRATUM IS APPARENT AT A LESSER DEPTH. THE SUMP HOLES SHALL EXTEND INTO THE DRAINAGE STRATUM A MINIMUM OF ONE (1) FOOT.

A / L204 — DOUBLE STAKE TREE PLANTING

NOT TO SCALE

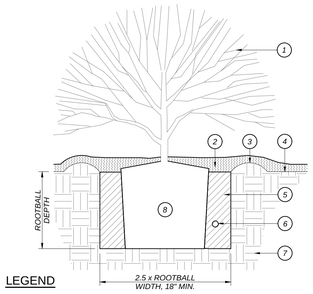

LEGEND

1. *SHRUB.*
2. *WOOD MULCH LAYER.*
3. *3" HIGH WATERING BASIN.*
4. *FINISH GRADE.*
5. *AMENDED BACKFILL. SEE SPECIFICATIONS.*
6. *FERTILIZER PACKET. SEE SPECIFICATIONS.*
7. *SITE SOIL.*
8. *ROOTBALL. SET TOP OF ROOTBALL 1" ABOVE FINISH GRADE.*

NOTE: SEE C/L204 FOR SHRUB SPACING

B / L204 — SHRUB PLANTING

NOT TO SCALE

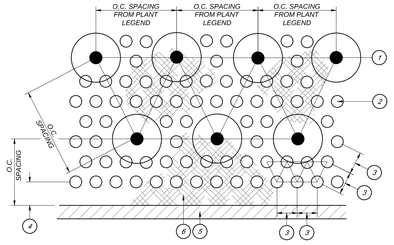

LEGEND:

1. *CONTAINER SHRUB OR GROUND COVER IN TRIANGULATED ROWS. SEE SHRUB PLANTING PER DETAIL*
2. *GROUND COVER FLATS OR LINERS - TRIANGULATED ROWS.*
3. *SPACE PER PLANT LEGEND. OMIT PLANTS WHERE IN CONFLICT WITH SHRUBS OR TREE WATERING BASINS.*
4. *SPACING DISTANCE FROM PLANT LEGEND.*
5. *HARDSCAPE ELEMENT: CURB, WALK, ETC.*
6. *MULCH PER SPECIFICATIONS.*

B / L204

C / L204 — SHRUB AND GROUND COVER SPACING

NOT TO SCALE

PLANTING NOTES:

1. *IMMEDIATELY NOTIFY THE OWNER'S REPRESENTATIVE IF IT IS OBVIOUS THAT OBSTRUCTIONS OR STRUCTURES, IRRIGATION SYSTEM MALFUNCTION, EXISTING TREES OR PLANTS, GRADE DIFFERENCES OR CHANGES IN THE SITE PLAN ARE PRESENT THAT WILL IMPACT THE PLANTING DESIGN. FAILURE TO GIVE SUCH NOTIFICATION SHALL PLACE THE RESPONSIBILITY ON THE CONTRACTOR FOR ANY REVISIONS OR REPLACEMENTS NECESSARY FOR CORRECTION.*
2. *ANY EXISTING PLANTING SHOWN ON THE PLAN IS FOR REFERENCE ONLY. THE CONTRACTOR SHALL VERIFY THE EXISTING PLANTING AT THE SITE PRIOR TO STARTING WORK. UNLESS NOTED OTHERWISE, THE CONTRACTOR SHALL PROTECT THE EXISTING PLANTING ADJACENT TO THE WORK FROM DAMAGE OR DISTRESS.*
3. *ALL TREES AND SHRUBS SHALL BE OF CLASS A QUALITY WITHOUT PESTS, DISEASE OR DAMAGE, SHALL BE WELL ESTABLISHED IN THEIR CONTAINERS WITHOUT GIRDLING ROOTS OR EXCESSIVE TOP GROWTH, AND SHALL COMPLY WITH THE REQUIREMENTS OF THE "AMERICAN STANDARDS FOR NURSERY STOCK" (ANSI Z60.1).*
4. *NOTIFY THE LANDSCAPE ARCHITECT PRIOR TO THE INSTALLATION OF IRRIGATION COMPONENTS AND TREE AND/OR SHRUB PLANTING FOR APPROVAL OF THE PLANT LAYOUT AND PLANT QUALITY. PLANT LOCATIONS SHALL AVOID CONFLICTS WITH EXISTING IMPROVEMENTS, PLANTINGS OR UTILITIES, LIGHT POLES WHILE MEETING THE DESIGN INTENT. DO NOT PLANT TREES WITHIN 15 FEET OF LIGHT POLES UNLESS SPECIFICALLY AUTHORIZED. FAILURE TO OBTAIN SUCH APPROVAL SHALL PLACE THE RESPONSIBILITY ON THE CONTRACTOR FOR ANY RELOCATION OR REPLACEMENT OF IRRIGATION COMPONENTS, PLANTED TREES AND/OR SHRUBS.*
5. *PLANT QUANTITIES ARE PROVIDED FOR BIDDING CONVENIENCE ONLY. THE CONTRACTOR SHALL PROVIDE SUFFICIENT QUANTITIES OF PLANTS EQUAL TO THE SYMBOL COUNT OR TO FILL THE AREA SHOWN ON THE PLAN AT THE SPECIFIED TRIANGULAR SPACING.*
6. *WHERE GROUND COVER PLANTS ARE SHOWN AT A SPECIFIED SPACING, THE GROUND COVER PLANTING CONTINUES UNDERNEATH THE TALLER SHRUBS AND TREES AS SHOWN IN THE PLANTING DETAILS. DO NOT PLANT GROUND COVER IN SHRUB OR TREE WATERING BASINS.*
7. *ALL NEW TREES LOCATED WITHIN 8 FEET OF PAVEMENT OR STRUCTURES SHALL HAVE A ROOT CONTROL BARRIER INSTALLED WHEN PLANTED. UNLESS OTHERWISE SPECIFIED, INSTALL A 12 FOOT LONG X 24 INCH DEEP LINEAR POLYETHYLENE BARRIER VESPRO OR EQUAL AT THE EDGE OF PAVEMENT/STRUCTURE, CENTERED ON THE TREE TRUNK AS SHOWN IN THE PLANTING DETAILS.*
8. *REMOVE NURSERY STAKES FROM TREES AFTER TREE STAKING OR GUYING AS SHOWN IN THE DETAILS.*
9. *INSTALL PERFORATED POLYETHYLENE TREE TRUNK PROTECTORS FOR ALL NEW TREES PLANTED IN TURF. UNLESS NOTED OTHERWISE, MAINTAIN A MINIMUM 6 FOOT DIAMETER MULCHED AREA AT THE BASE OF THE TREE INSIDE THE WATERING BASIN.*
10. *THE CONTRACTOR SHALL PRUNE NEW TREES ONLY WHEN SPECIFICALLY DIRECTED BY THE LANDSCAPE ARCHITECT. TREES HEADED BACK WITHOUT INTACT SCAFFOLDING BRANCH STRUCTURE OR IN ROOT-BOUND CONTAINERS SHALL BE REJECTED.*
11. *SUBMIT REPRESENTATIVE SOIL SAMPLES OF NATIVE AND PROPOSED IMPORT, IF NEEDED, PLANTING TOPSOIL TO A SOIL LAB FOR HORTICULTURAL ANALYSES AND FERTILITY RECOMMENDATIONS. AMEND SOIL ACCORDING TO THE RECOMMENDATIONS OF THE SOILS REPORT AND LANDSCAPE ARCHITECT'S DIRECTION. SEE THE LANDSCAPE PLANTING SPECIFICATIONS FOR ADDITIONAL INSTRUCTIONS.*
12. *PROVIDE SANDY LOAM TOPSOIL PER SPECIFICATION IN ALL RAISED PLANTERS AND WHERE IMPORT TOPSOIL IS REQUIRED. NATIVE SITE SOIL MAY BE USED IN RAISED PLANTERS ONLY WHEN THE NATIVE SITE SOIL MEETS THE CRITERIA FOR SANDY LOAM TOPSOIL AS DETERMINED BY A SOIL ANALYSIS.*
13. *PRIOR TO SOIL CONDITIONING, RIP IN TWO DIFFERENT DIRECTIONS WITH TINES AT 12 INCH SPACING, ALL TURFGRASS AREAS TO A 12 INCH DEPTH, AND SHRUB/GROUND COVER AREAS TO A 18 INCH DEPTH. ROUGH GRADE AND TILL THE APPROVED SOIL CONDITIONERS AND FERTILIZERS INTO THE TOP 6 INCHES PER THE LANDSCAPE PLANTING SPECIFICATIONS. COMPOST RATE SHALL BE A MINIMUM OF FOUR (4) CUBIC YARDS PER 1,000 SQUARE FEET.*
14. *UPON THE COMPLETION OF THE SOIL CONDITIONING, REMOVE ROCKS AND CLODS 1 INCH DIAMETER AND GREATER FROM THE TOP TWO INCHES OF TOPSOIL, AND ALL DEBRIS. FINISH GRADE THE AREA TO +/- 0.04 FOOT TOLERANCE. FINISH GRADE IN MULCHED AREAS SHALL BE STRAIGHT GRADES WITHOUT HUMPS OR DEPRESSIONS AND SHALL BE 2 INCHES BELOW ADJACENT HARDSCAPE, INLETS OR UTILITY BOX COLLARS. RELATIVE DENSITY OF THE TOPSOIL SHALL NOT EXCEED 85% COMPACTION.*
15. *OBTAIN THE APPROVAL OF THE OWNER'S REPRESENTATIVE TO BEGIN PLANTING OPERATIONS ONCE THE IRRIGATION SYSTEM IS OPERATIONAL AND THE SOIL CONDITIONING AND FINISH GRADING IS COMPLETED.*
16. *AFTER PLANTING IS COMPLETED AND JUST PRIOR TO MULCH INSTALLATION, APPLY A BROAD SPECTRUM PRE-EMERGENT HERBICIDE TO ALL NON-TURFGRASS PLANTING AREAS PER THE MANUFACTURER'S SPECIFICATIONS.*
17. *WHERE MULCH IS TO BE INSTALLED IN AN EXISTING PLANTING AREA, BREAKUP/TILL THE EXISTING SOIL TO A MINIMUM 6 INCH DEPTH PER SPECS, AND ADJUST FINISH GRADE ADJACENT TO HARDSCAPE AND DRAINAGE ELEMENTS TO PROVIDE A 2 INCH DEPTH THAT TRANSITIONS TO THE EXISTING GRADE OVER 1 TO 2 FEET.*
18. *INSTALL A MINIMUM 3 INCH DEPTH OF CHIPPED WALK-ON WOOD MULCH IN ALL PLANTING AREAS AND TREE WATERING BASINS EXCEPT FOR TURFGRASS AREAS, SLOPES 3H:1V OR GREATER, AREAS TO RECEIVE SEED PLANTING, OR AS NOTED ON THE PLAN. AREAS PLANTED WITH FLATS SHALL HAVE A MINIMUM MULCH DEPTH OF 2 INCHES. INSTALL A MINIMUM 3 FOOT RADIUS OF 3 INCH DEEP WOOD MULCH AT THE BASE OF ALL TREES IN NEW TURFGRASS AREAS.*
19. *ALL EXISTING PLANTS AND/OR TURFGRASS SHOWN TO REMAIN AND DAMAGED OR REMOVED BY CONSTRUCTION OPERATIONS AND/OR UTILITY/IRRIGATION/DRAINAGE LINES SHALL BE REPLACED WITH PLANTS THAT MATCH AS CLOSELY AS POSSIBLE TO THE EXISTING PLANT SPECIES, VARIETY AND SIZE. THE REPLACEMENT TURFGRASS SOD VARIETY SHALL BE THE SAME AS SHOWN IN THE PLANTING LEGEND AS IF FOR NEW WORK, OR SHALL MATCH THE EXISTING TURFGRASS VARIETY WHERE EXISTING. TILL SOIL CONDITIONING MATERIALS INTO THE TOP 6 INCHES OF THE SOIL OVER THE AREA OF REPAIR/REPLACEMENT AS IF FOR NEW WORK. ADJUST FINISH GRADE SO NEW TURFGRASS SOD ABUTS FLUSH TO EXISTING SOD GRADE. THE REPLACEMENT PLANTS AND/OR TURFGRASS SOD SHALL BE MAINTAINED AS PART OF THE ORIGINAL SCOPE OF WORK. THE REPAIR OR REPLACEMENT WORK SHALL BE AT THE CONTRACTOR'S SOLE EXPENSE.*
20. *CONTRACTOR SHALL MAINTAIN THE NEW PLANTING FOR HEALTHY AND VIGOROUS GROWTH, WHICH INCLUDES BUT IS NOT LIMITED TO WATERING, WEEDING, FERTILIZING, MOWING AND EDGING (AT LEAST ONCE A WEEK), REMOVING TRASH AND DEBRIS, AND OTHER RELATED ACTIVITIES THROUGHOUT THE DURATION OF THE MAINTENANCE PERIOD UNTIL FINAL ACCEPTANCE.*

CONTRACTOR SPECIAL PLANTING NOTES:

1. *AN ASSESSMENT AND VALUATION OF ONSITE EXISTING TREES SCHEDULED TO REMAIN IN THE AREA OF WORK SHALL BE PERFORMED BY THE CONTRACTOR'S ARBORIST PRIOR TO THE START OF CONSTRUCTION OPERATIONS PER THE 'EXISTING LANDSCAPE PROTECTION' SPECIFICATION.*
2. *THE CONTRACTOR SHALL RIP, CONDITION AND TILL THE ENTIRE EXTENT OF ALL PLANTING AREAS RECEIVING NEW PLANTS PER THE PLANTING NOTES AND 'LANDSCAPE PLANTING' SPECIFICATIONS.*
3. *ALL EXISTING MIXED PLANTING AREAS RECEIVING NEW WOOD MULCH SHALL BE MANUALLY TILLED TO A MINIMUM DEPTH OF 4 INCHES, CLODS BROKEN UP TO A MAXIMUM 1 INCH DIAMETER, FINISH GRADED TO 2 INCHES BELOW ADJACENT SURFACES AND UTILITY/IRRIGATION BOXES WITHIN 12 INCHES OF THE HARDSCAPE EDGE, AND A PRE-EMERGENT HERBICIDE APPLIED PRIOR TO WOOD MULCH INSTALLATION. PROTECT EXISTING PLANTING DURING WOOD MULCH PREPARATION AND INSTALLATION.*
4. *THE ORIGINAL PLANTING OBSERVATION LOG SHALL BE MAINTAINED ON THE AS-BUILT RECORD DRAWING SET.*
5. *THE AS-BUILT RECORD DRAWING SET AND MAINTENANCE MANUAL SHALL BE SUBMITTED AND ACCEPTED PRIOR TO THE SCHEDULING OF A FINAL ACCEPTANCE REVIEW.*

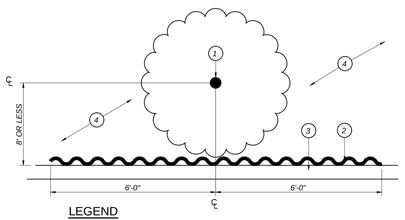

LEGEND

1. *TREE TRUNK.*
2. *12 LF OF 24"-DEEP ROOT CONTROL BARRIER: DEEP ROOT UB24-2 OR EQUIVALENT. CENTER BARRIER ON TRUNK OF TREE. INSTALL PER MANUFACTURER'S SPECIFICATIONS.*
3. *HARDSCAPE ELEMENT: CURB, SIDEWALK, WALL, ETC.*
4. *PLANTING AREA.*
5. *INSTALL ROOT CONTROL BARRIER ON ALL SIDES OF THE PLANTING AREA WHEN SURROUNDED BY HARDSCAPE WITHIN 8' OF THE TREE TRUNK.*

D / L204 — ROOT CONTROL BARRIER

NOT TO SCALE

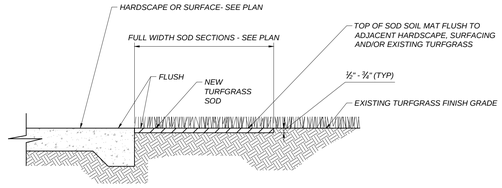

NOTE:

IF THE EXISTING TURFGRASS FINISH GRADE IS HIGHER OR LOWER THAN THE NEW FINISH SURFACE, TRANSITION GRADE THE NEW SOD AT A MAXIMUM 1V:12H SLOPE

E / L204 — TURF SOD INSTALLATION

NOT TO SCALE

TREE SIZE AND QUALITY STANDARDS

AMERICAN STANDARDS FOR NURSERY STOCK (ANSI Z60.1) AND GUIDELINE SPECIFICATIONS FOR NURSERY TREE QUALITY (URBAN TREE FOUNDATION) SHALL APPLY

	TYPES 1 & 2 SHADE TREES			TYPE 3 SMALL UPRIGHT TREES**			TYPE 4 SMALL SPREADING TREES***		
CONTAINER SIZE	MIN. CALIPER	MAX. CALIPER	TYPE 1 MIN./MAX. HEIGHT*	MIN. CALIPER	MAX. CALIPER	MIN./MAX. HEIGHT	MIN. CALIPER	MAX. CALIPER	MIN./MAX. HEIGHT
15 GALLON	0.75	2.0	7-10 FT	0.75	2.0	6-8 FT	0.75	2.0	4-8 FT
24" BOX	1.25	3.0	8-12 FT	1.25	3.0	8-10 FT	1.25	3.0	6-10 FT
36" BOX	1.75	3.5	10-16 FT	1.75	3.5	10-14 FT	1.75	3.5	7-12 FT
42" BOX	2.0	4.0	12-20 FT	2.0	4.0	12-18 FT	2.0	4.0	8-14 FT
48" BOX	2.5	5.0	14-26 FT	2.5	5.0	14-22 FT	2.5	5.0	9-16 FT

** TYPE 2 TREE HEIGHTS SHALL NOT BE LESS THAN TWO-THIRDS THE LISTED HEIGHT RANGE.*

*** TYPE 3 TREES SHALL HAVE A MINIMUM OF SEVEN BRANCHES*

**** TYPE 4 TREES SHALL HAVE A MINIMUM OF EIGHT BRANCHES*

CALIPER MEASUREMENT FOR CLUMP OR MULTI-STEM TREES IS ONE-HALF THE SUM OF THE THREE LARGEST TRUNK CALIPERS

CALIPER MEASUREMENT FOR <4" TRUNK IS +6" ABOVE ROOTBALL (NOT INCLUDING ROOTSTOCK). >4" TRUNK IS +12"

TREES SHALL HAVE A CENTRAL LEADER. NEW LEADERS LESS THAN HALF THE DIAMETER OF A HEADED LEADER, BROKEN OR CO-DOMINATE LEADERS ARE NOT ACCEPTABLE

SCAFFOLD BRANCHES SHALL BE LESS THAN 2/3 THE DIAMETER OF THE TRUNK, WITHOUT INCLUDED BARK AT ATTACHMENT. SCAFFOLD BRANCHES SHALL BE BALANCED, WELL SPACED VERTICALLY, AND WITH A RADIALLY BLANK SECTOR NO GREATER THAN 1/3 OF THE CANOPY CIRCUMFERENCE.

TEMPORARY BRANCHES ON THE LOWER TRUNK SHALL BE LESS THAN 3/8 INCH DIAMETER; AND THE CLEAR TRUNK HEIGHT SHALL BE NO MORE THAN 40% OF THE TOTAL TREE HEIGHT.

THE ROOT COLLAR AND ROOTBALL SHALL BE FREE OF DEFECTS INCLUDING CIRCLING, KINKED AND GIRDLING ROOTS. ROOTS THE EDGE AND BOTTOM OF THE CONTAINER SHALL BE LESS THAN 1/4 INCH DIAMETER, AND UNIFORM THROUGHOUT THE CONTAINER.

TREE CANOPY WIDTH SHALL BE A MINIMUM OF 25% OF THE STANDARD FORM TREE HEIGHT.

DO NOT HEAD BACK OR PRUNE TREES UNLESS APPROVED AND/OR DIRECTED TO BY THE LANDSCAPE ARCHITECT

LANDSCAPE PLANTING OBSERVATION LOG

		REVIEWED & ACCEPTED BY OWNER'S REP OR LAND ARCH		
ITEM NO.	WORK ITEM DESCRIPTION	PRINT NAME	SIGNATURE	DATE
PL-1	REPORT & PROTECTION OF EXISTING TREES			
PL-2	RIPPING OF PLANTING AREAS			
PL-3	SOIL CONDITIONING & TILLAGE DEPTH			
PL-4	IRRIGATION COVERAGE PRIOR TO PLANTING			
PL-5	FINISH GRADING PRIOR TO PLANTING			
PL-6	TREES - INITIAL QUALITY & LAYOUT			
PL-7	PLANTS - INITIAL QUALITY & LAYOUT			
PL-8	WOOD MULCH DEPTH			

NOTES: THE ORIGINAL VERSION OF THIS LOG SHALL BE MAINTAINED ON THE AS-BUILT RECORD DRAWING SET.
WORK ITEMS MAY NOT BE REVIEWED IF PRIOR WORK ITEMS HAVE NOT BEEN ACCEPTED.

SEE SHEET L201
AND L202
FOR PLANTING PLAN

Know what's below.
Call before you dig.

Blair, Church & Flynn
CONSULTING ENGINEERS
491 Clovis Avenue, Suite 200
Clovis, California 93612
Tel (559) 326-1400
Fax (559) 326-1500

FOR BID ONLY

This drawing, LEP especially, covers its common law copyright and other property rights in them. Reproduction, disclosure, use, or adaptation of this drawing without the written authorization of TETER, LLP is prohibited.

MARK	DATE	DESCRIPTION
	11/1/2022	DSA BACKCHECK

TETER, LLP
ARCHITECTS ENGINEERS CONNECTED
FRESNO HEADQUARTERS
VISALIA | BAKERSFIELD | MODESTO | SAN LUIS OBISPO

LANDSCAPE ARCHITECT — BRILEY — 10/31/22 — RENEWAL DATE — STATE OF CALIFORNIA

TULARE CAMPUS CTE
COLLEGE OF THE SEQUOIAS
4999 E. BARDSLEY AVE.
TULARE, CA

DRAWING TITLE
PLANTING DETAILS

PROJECT NO.
20-12032

DRAWING
L204

Drawing: P:\221-0340\Site\production\drawings\221340_iad01.dwg, L204 Planting Details - ACP.ctb
Plot By: ibalvarez Nov 02, 2022 - 12:19pm

PLOT DATE: 11/2/2022 12:19:18 PM

\\tetr-file1\Users\ryan.odom\Documents\12032-A-COS Tulare CTE_ryan.odomNLB27.rvt

ABBREVIATIONS

ABBREVIATIONS: WHEN USED IN THESE DOCUMENTS SHALL CONFORM TO THE FOLLOWING LIST UNLESS OTHERWISE NOTED. DRAWINGS OF OTHER DISCIPLINES (SUCH AS CIVIL, STRUCTURAL, PLUMBING, MECHANICAL, AND ELECTRICAL) MAY CONTAIN SPECIFIC ABBREVIATIONS, REFERENCES, AND LEGENDS WITH INTERPRETATION INTENDED ONLY FOR THOSE DISCIPLINES.

&	AND
L	ANGLE
@	AT
℄	CENTERLINE
Ø	DIAMETER OR ROUND
⊥	PERPENDICULAR
#	POUND OR NUMBER
(E)	EXISTING
(N)	NEW
ABV.	ABOVE
A/C	AIR CONDITIONING
ACP	ASPHALT CONCRETE PAVING
ACST.	ACOUSTICAL
A.C.T.	ACOUSTIC CEILING TILE
A.B.	ANCHOR BOLT
ADA	AMERICANS WITH DISABILITIES ACT
ADAAG	ADA ACCESSIBLE GUIDELINES
ADDL.	ADDITIONAL
ADJ.	ADJUSTABLE
ADJC.	ADJACENT
A.F.F.	ABOVE FINISH FLOOR
A.F.G.	ABOVE FINISH GRADE
AGG.	AGGREGATE
ALT.	ALTERNATE
ALUM.	ALUMINUM
ANOD.	ANODIZED
A.P.C.	ACOUSTIC PANEL CEILING
APPROX.	APPROXIMATE
ARCH.	ARCHITECT(URAL)
AV	AUDIO VISUAL
BD.	BOARD
BEL.	BELOW
B.E.N	BOUNDARY EDGE NAILING
BLDG.	BUILDING
BLK.	BLOCK
BLKG.	BLOCKING
BM.	BEAM
BOT.	BOTTOM
BRG.	BEARING
BTWN.	BETWEEN
B.U.R.	BUILT-UP ROOF(ING)
C&G	CURB AND GUTTER
CAB.	CABINET
C.B.	CARRIAGE BOLT
CEM.	CEMENT
CER.	CERAMIC
C.F.	CUBIC FOOT
CI.	CAST IRON
C.J.	CONSTRUCTION JOINT
CL.	CENTER LINE
C.L.F.	CHAIN LINK FENCE
CLG.	CEILING
CLO.	CLOSET
CLR.	CLEAR
CL RM.	CLASS ROOM
CMU	CONCRETE MASONRY UNIT
CTR.	COUNTER
COL.	COLUMN
CONC.	CONCRETE
CONN.	CONNECTION
CONSTR.	CONSTRUCTION
CONT.	CONTINUOUS
CONTR.	CONTRACTOR
CPT.	CARPET
CRC	COLD ROLLED CHANNEL
CTR.	CENTER
CTSK	COUNTERSUNK
C.Y.	CUBIC YARD
D.A.	DISABLED ACCESS
DBL.	DOUBLE
DEMO	DEMOLISH/ DEMOLITION
D.F.	DRINKING FOUNTAIN OR DOUGLAS FIR
DET.	DETAIL
DIAG.	DIAGONAL
DIA.	DIAMETER
DIM.	DIMENSION
DISP.	DISPENSER
DN.	DOWN
DP.	DEEP
DS	DOWN SPOUT
DWG.(S)	DRAWING
DWR.	DRAWER
E	EAST
EA.	EACH
E.F.	EXHAUST FAN
EGR.	ENGINEER
E.J.	EXPANSION JOINT
EL.	ELEVATION
ELEC.	ELECTRIC(AL)
ELEV.	ELEVATOR
EMB.	EMBEDMENT
EMER.	EMERGENCY
E.N.	EDGE NAILING
ENCL.	ENCLOSURE
EQ.	EQUAL
EQUIP.	EQUIPMENT
EVAP.	EVAPORATIVE
E.W.	EACH WAY
EXH.	EXHAUST
EXIST.	EXISTING
EXP.	EXPANSION
EXT.	EXTERIOR
FA.	FIRE ALARM
F.B.	FLAT BAR
F.B.O.	FURNISHED BY OWNER/OTHERS
F.D.	FLOOR DRAIN
F.D.C.	FIRE DEPARTMENT CONNECTION
FDN.	FOUNDATION
F.E.	FIRE EXTINGUISHER
F.E.C.	FIRE EXTINGUISHER CABINET
F.F.	FACTORY FINISH
F.FLR.	FINISH FLOOR
F.G.	FINISH GRADE
F.H.	FIRE HYDRANT
FHMS	FLAT HEAD MACHINE SCREW
FHWS	FLAT HEAD WOOD SCREW
FIN.	FINISH
FIXT.	FIXTURE
FLR.	FLOOR(ING)
FLASH.	FLASHING
FLUOR.	FLUORESCENT
F.O.	FACE OF
F.O.C.	FACE OF CONCRETE
F.O.F.	FACE OF FINISH
F.O.M.	FACE OF MASONRY
F.O.S.	FACE OF STUD
FRP	FIBERGLASS REINFORCED PANELING
F.S.	FIRE SPRINKLER(S)
F.S.H.	FIRE SPRINKLER HEAD
FT.	FOOT/FEET
FURR.	FURRING
FUT.	FUTURE
GA.	GAUGE
GALV.	GALVANIZED
G.B.	GRAB BAR
G.C.	GENERAL CONTR.
GEN.	GENERAL
G.I.	GALVANIZED IRON
GL.	GLASS
GND.	GROUND
GR.	GRADE
GYP.	GYPSUM
H.B.	HOSE BIBB
HBD.	HARDBOARD
H.C.	HOLLOW CORE
HD.	HEAD
H.D.	HEAVY DUTY
HDR.	HEADER
HDW.	HARDWARE
HDWD.	HARDWOOD
H.M.	HOLLOW METAL
H.M.D.	HOLLOW METAL DOOR
H.M.F.	HOLLOW METAL FRAME
HORIZ.	HORIZONTAL
HR.	HOUR
HT.	HEIGHT
HVAC	HEATING/VENTIL-ATING/AIR COND-ITIONING
HWY	HIGH WAY
I.D.	INSIDE DIAMETER/ DIMENSION
INFO	INFORMATION
INSUL.	INSULATION
INT.	INTERIOR
JAN.	JANITOR
JT.	JOINT
KIT.	KITCHEN
K.O.	KNOCK OUT
K.O.P.	KNOCK OUT PANEL
LAB.	LABORATORY
LAM.	LAMINATE
LAV.	LAVATORY
LB(S)	POUND (POUNDS)
L.B.	LAG BOLT
L.F.	LINEAL FOOT
L.H.	LEFT HAND
LIB.	LIBRARY
LT.	LIGHT
LT.WT.	LIGHT WEIGHT
MACH.	MACHINE
MAINT.	MAINTENANCE
MAX.	MAXIMUM
M.B.	MACHINE BOLT
M.B.M.	METAL BUILDING MANUFACTURER
MECH.	MECHANICAL
MED.	MEDIUM
MEMB.	MEMBRANE
MET.	METAL
MFR.	MANUFACTURER
MH.	MANHOLE
MKR.	MARKER
MIN.	MINIMUM
MISC.	MISCELLANEOUS
M.O.	MASONRY OPENING
MTD.	MOUNTED
MTG.	MEETING
MULL.	MULLION
N	NORTH
N.I.C.	NOT IN CONTRACT
NO.	NUMBER
NOM.	NOMINAL
N.R.C.	NOISE REDUCTION COEFFICIENT
N.T.S.	NOT TO SCALE
OCC.	OCCUPANT LOAD
O.C.	ON CENTER
O.D.	OUTSIDE DIAMETER/ DIMENSION
OFF.	OFFICE
OFCI	OWNER FURNISHED, CONTR. INSTALLED
OFOI	OWNER FURNISHED, OWNER INSTALLED
O.F.R.D.	OVER FLOW ROOF DRAIN
O.H.	OPPOSITE HAND
O.H.C.D.	OVER HEAD COILING DOOR
O.H.M.S.	OVAL HEAD MACH. SCREW
O.H.W.S.	OVAL HEAD WOOD SCREW
OPNG.	OPENING
OPP.	OPPOSITE
O/	OVER
ORIG.	ORIGINAL
OVHD	OVER HEAD
OWJ	OPEN WEB JOIST
P.B.N.	PLYWOOD BOUNDARY NAILING
P.E.N.	PLYWOOD EDGE NAILING
P.E.S.	PLYWOOD EDGE SCREWS
P.I.V.	POST INDICATOR VALVE
P.LAM.	PLASTIC LAMINATE
P.L.	PROPERTY LINE
PL.	PLATE
PLAS.	PLASTER
PLYWD.	PLYWOOD
PR.	PAIR
PSF	POUNDS PER SQUARE FOOT
PSI	POUNDS PER SQUARE INCH
PT.	POINT
P.T.D.	PAPER TOWEL DISP.
P.T.D.F.	PRESSURE TREATED DOUGLAS FIR
PTN.	PARTITION
PVC	POLYVINYL CHLORIDE
R.	RADIUS
R	THERMAL RESISTANCE
R.A.	RETURN AIR
R.D.	ROOF DRAIN
REFL.	REFLECTED
REFR.	REFRIGERATOR
REINF.	REINFORCED
REM.	REMOVE
REQD.	REQUIRED
RESIL.	RESILIENT
R.H.	RIGHT HAND
R.H.W.S.	ROUND HEAD WOOD SCREW
RM.	ROOM
R.O.	ROUGH OPENING
R.O.W.	RIGHT-OF-WAY
RWD.	REDWOOD
RWL	RAIN WATER LEADER
S	SOUTH
S.A.	SUPPLY AIR
S.C.	SOLID CORE
SCH.	SCHEDULE
S.D.	STORM DRAIN
SECT.	SECTION
SF	SQUARE FEET/FOOT
SHR.	SHOWER
SHTG.	SHEATHING
SIM.	SIMILAR
S.M.	SHEET METAL
S.O.G.	SLAB-ON-GRADE
SPEC(S).	SPECIFICATION(S)
SPKR.	SPEAKER
SQ.	SQUARE
S.S.	STAINLESS STEEL
STA.	STATION
STC	SOUND TRANS-MISSION CLASS
STD.	STANDARD
STL.	STEEL
STOR.	STORAGE
STRUCT.	STRUCTURAL
SUSP.	SUSPENDED
S.W.	SIDE WALK
SYM.	SYMMETRICAL
T.C.	TOP OF CONCRETE
TEMP.	TEMPORARY
TMPD.	TEMPERED
T&G	TONGUE AND GROOVE
THD.	THREADED
THK.	THICK
T.I.	TENANT IMPROVEMENT
TK.BD.	TACK BOARD
T.O.S.	TOP OF STEEL
T.P.	TOP OF PAVEMENT
TS	TUBE STEEL
TEL.	TELEPHONE
TTB	TELEPHONE TERM-INAL BACK BD.
TV	TELEVISION
TYP.	TYPICAL
U.G.	UNDERGROUND
U.N.O.	UNLESS NOTED OTHERWISE
UR.	URINAL
VCT	VINYL COMPOSITION TILE
VERT.	VERTICAL
VTR.	VENT TO ROOF
VWC	VINYL WALL COVERING
W	WEST OR WIDTH/WIDE
W/	WITH
W.C.	WATER CLOSET
W.CH.	WHEEL CHAIR
WD.	WOOD
WDW.	WINDOW
WF	WIDE FLANGE
W.H.	WATER HEATER
W/O	WITHOUT
W.P.	WATERPROOF
W.S.	WOOD SCREW
WT.	WEIGHT
WWF	WELDED WIRE FABRIC
XFMR	TRANSFORMER

CODES AND ORGANIZATIONS

CBC	CALIFORNIA BUILDING CODE
CEC	CALIFORNIA ELECTRICAL CODE
CFC	CALIFORNIA FIRE CODE
CMC	CALIFORNIA MECHANICAL CODE
CPC	CALIFORNIA PLUMBING CODE
DSA	DIVISION OF THE STATE ARCHITECT
ICBO	INTERNATIONAL CONFERENCE OF BUILDING OFFICIALS
NSF	NATIONAL SANITATION FOUNDATION
NFPA	NATIONAL FIRE PROTECTION ASSOCIATION
NEC	NATIONAL ELECTRICAL CODE

TYPICAL SYMBOLS

SYMBOLS

∠	ANGLE
Φ	DIAMETER OR ROUND
⊥	PERPENDICULAR
&	AND
@	AT
℄	CENTER LINE
#	POUND OR NUMBER

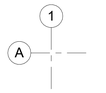

STATION LINE

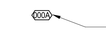

DOOR SYMBOL

DOOR REFERENCE

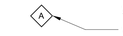

WINDOW SYMBOL

WINDOW REFERENCE

KEYNOTE SYMBOL

KEYNOTE REFERENCE, REFER TO KEYNOTE LIST ON SHEET

WORK POINT, CONTROL POINT OR DATUM POINT

WALL SYMBOL

WALL REFERENCE

SECTION

LOCATION ON SHEET REFERENCED

SHEET NUMBER WHERE SECTION IS LOCATED

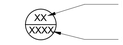

DETAIL

LOCATION ON SHEET REFERENCED

SHEET NUMBER WHERE DETAIL IS LOCATED

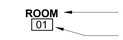

ROOM IDENTIFICATION

ROOM NAME

ROOM NUMBER

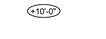

CEILING HEIGHT

FOR BID ONLY

Teter, LLP expressly reserves its common law copyright and other property rights in these plans. This document, the ideas and designs incorporated herein, as an instrument of professional service, is not to be used in whole or in part, for any other project without prior written authorization.

MARK	DATE	DESCRIPTION
	11/1/2022	DSA RESUBMITTAL

TETER, LLP
FRESNO HEADQUARTERS
VISALIA | BAKERSFIELD | MODESTO | SAN LUIS OBISPO
ARCHITECTS ENGINEERS CONNECTED
TETER

TULARE CAMPUS CTE
COLLEGE OF THE SEQUOIAS
4999 E. BARDSLEY AVE.
TULARE, CA

DRAWING TITLE
LEGENDS AND ABBREVIATIONS

PROJECT NO.
21-12032

DRAWING
A000

PLOT DATE: 11/1/2022 9:55:18 PM

\\tetr-file1\Users\jesus.izazaga_TETR\Documents\12032-A-COS Tulare CTE_jesus.izazaga.rvt

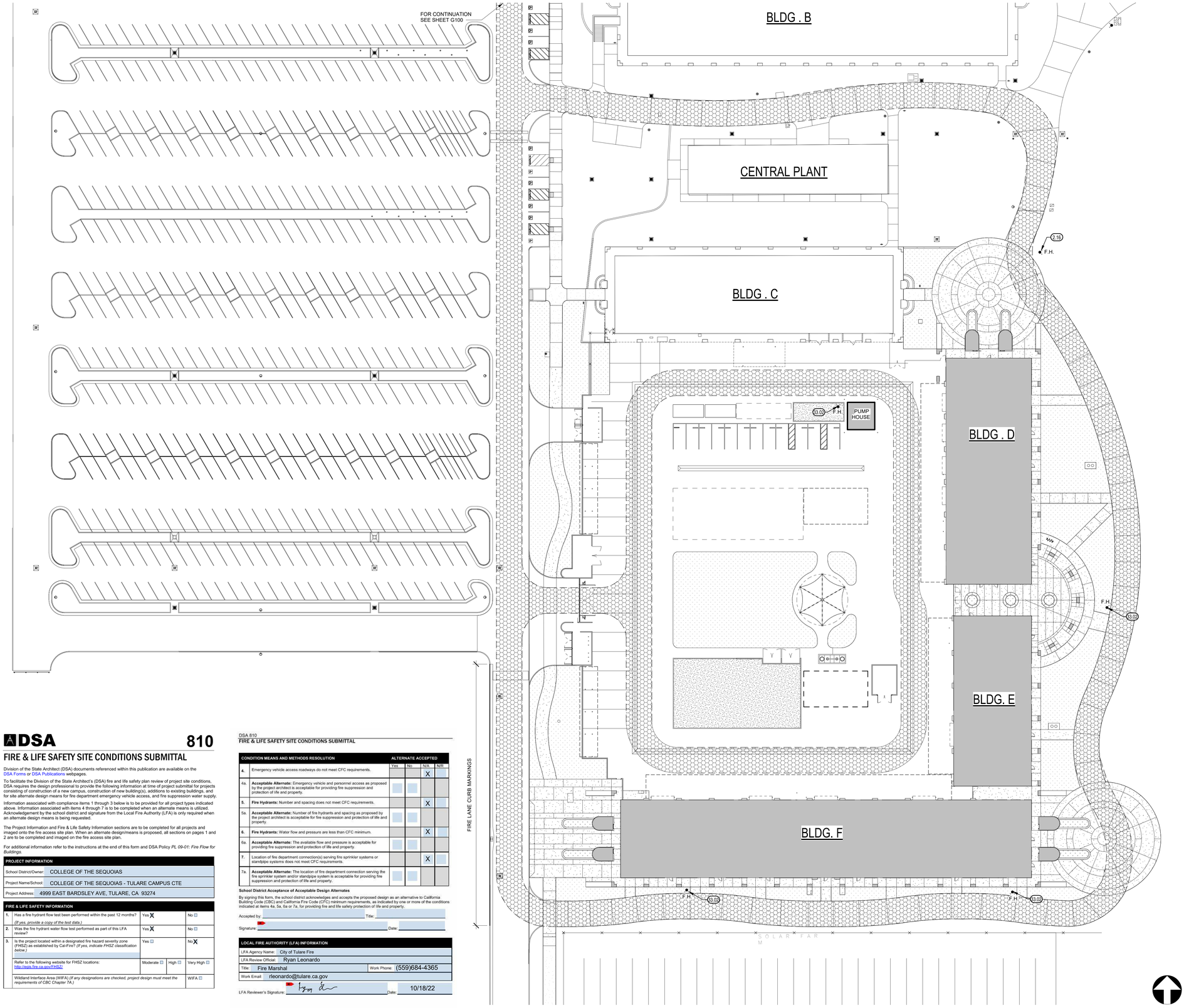

KEYNOTES (00.00)

2.16 EXISTING FIRE HYDRANT
33.02 FIRE HYDRANT, SEE CIVIL

LEGEND

- EXISTING BUILDING NOT INCLUDED IN SCOPE OF WORK
- PROPOSED BUILDINGS IN THIS APPLICATION
- FIRE ACCESS LANE W/ UNOBSTRUCTED WIDTH OF 20'-0" MIN. AND AN UNOBSTRUCTED VERTICAL CLEARANCE OF 13'-6" MIN.
- ASPHALT PAVING - SEE CIVIL DRAWINGS
- TURF AREA, SEE LANDSCAPE DRAWINGS
- CONCRETE PAVING PER CIVIL, SEE A141 AND 142 FOR CONCRETE FINISH AND LAYOUT INFORMATION
- LS LANDSCAPE AREA, SEE LANDSCAPE.
- LIGHT POLE, SEE ELECTRICAL.
- PATHWAY LIGHT BOLLARD, SEE ELECTRICAL.
- F.H. FIRE HYDRANT, SEE CIVIL.
- F.D.C FIRE DEPARTMENT CONNECTION, SEE CIVIL.
- P.I.V POST INDICATOR VALVE, SEE CIVIL.
- ASSUMED PROPERTY LINE
- PROPERTY LINE
- ACCESSIBLE ROUTE (2019 C.B.C. SECTION 11B-206)

THE ACCESSIBLE ROUTE IS A CONTINUOUS UNOBSTRUCTED PATH CONNECTING ACCESSIBLE ELEMENTS AND SPACES OF AN ACCESSIBLE SITE, BUILDING OR FACILITY THAT CAN BE NEGOTIATED BY A PERSON WITH A DISABILITY USING A WHEELCHAIR, AND THAT IS ALSO SAFE FOR AND USABLE BY PERSONS WITH OTHER DISABILITIES. ACCESSIBLE ROUTES SHALL COMPLY WITH CBC 11B-402. IN GENERAL, EXTERIOR ACCESSIBLE ROUTES SHALL COMPLY WITH THE FOLLOWING: SHALL BE STABLE, FIRM, AND SLIP RESISTANT; HAVE A 1:20 MAXIMUM RUNNING SLOPE FOR WALKS; HAVE A 1:12 MAXIMUM SLOPE FOR RAMPS AND CURB RAMPS; HAVE A 1/4:12 MAXIMUM CROSS SLOPE; HAVE A 48" MINIMUM WIDTH; HAVE NO VERTICAL OFFSETS GREATER THAN 1/4"; OFFSETS BETWEEN 1/4" AND 1/2" SHALL BE BEVELED WITH A SLOPE NOT EXCEEDING 1V:2H; HAVE NO OPENINGS ALLOWING THE PASSAGE OF A 1/2" DIAMETER SPHERE; ELONGATED OPENINGS SHALL BE PERPENDICULAR TO THE DIRECTION OF TRAVEL; HAVE A MINIMUM 6" HIGH CURB OR GUARDRAIL AT EDGES WHERE THE DROP OFF EXCEEDS 4" EXCEPT WHERE ADJACENT TO VEHICULAR WAYS; BE FREE OF ELEMENTS PROJECTING MORE THAN 4" FROM WALLS BETWEEN 27" AND 80" ABOVE THE WALKING SURFACE; AND HAVE 80" MINIMUM VERTICAL CLEARANCE.

DESIGN PROFESSIONAL IN CHARGE STATEMENT. (REF. DSA PROCEDURE PR 15-01)

- THE P.O.T. IDENTIFIED IN THESE CONSTRUCTION DOCUMENTS MEETS THE REQUIREMENTS OF THE CURRENT APPLICABLE CALIFORNIA BUILDING CODE (CBC) ACCESSIBILITY PROVISIONS FOR PATH OF TRAVEL REQUIREMENTS FOR ALTERATIONS, ADDITIONS AND STRUCTURAL REPAIRS.
- AS PART OF THE DESIGN OF THIS PROJECT, THE P.O.T. WAS EXAMINED AND ANY ELEMENTS, COMPONENTS, OR PORTIONS OF THE P.O.T. THAT WERE DETERMINED TO BE NONCOMPLIANT WITH THE CBC HAVE BEEN IDENTIFIED AND THE CORRECTIVE WORK NECESSARY TO BRING THEM INTO COMPLIANCE HAS BEEN INCLUDED WITHIN THE SCOPE OF THIS PROJECT'S WORK THROUGH DETAILS, DRAWINGS, AND SPECIFICATIONS INCORPORATED INTO THESE CONSTRUCTION DOCUMENTS.
- ANY NONCOMPLIANT ELEMENTS, COMPONENTS OR PORTIONS OF THE P.O.T. THAT WILL NOT BE CORRECTED BY THIS PROJECT BASED ON VALUATION THRESHOLD LIMITATIONS OR A FINDING OF UNREASONABLE HARDSHIP ARE INDICATED IN THESE CONSTRUCTION DOCUMENTS.
- DURING CONSTRUCTION, IF P.O.T. ITEMS WITHIN THE SCOPE OF THE PROJECT REPRESENTED AS CBC COMPLIANT ARE FOUND TO BE NONCONFORMING BEYOND REASONABLE CONSTRUCTION TOLERANCES, THE ITEMS SHALL BE BROUGHT INTO COMPLIANCE WITH THE CBC AS A PART OF THIS PROJECT BY MEANS OF A CONSTRUCTION CHANGE DOCUMENT.

DSA 810

FIRE & LIFE SAFETY SITE CONDITIONS SUBMITTAL

Division of the State Architect (DSA) documents referenced within this publication are available on the DSA Forms or DSA Publications webpages.

To facilitate the Division of the State Architect's (DSA) fire and life safety plan review of project site conditions, DSA requires the design professional to provide the following information at time of project submittal for projects consisting of construction of a new campus, construction of new building(s), additions to existing buildings, and for site alternate design means for fire department emergency vehicle access, and fire suppression water supply.

Information associated with compliance items 1 through 3 below is to be provided for all project types indicated above. Information associated with items 4 through 7 is to be completed when an alternate means is utilized. Acknowledgement by the school district and signature from the Local Fire Authority (LFA) is only required when an alternate design means is being requested.

The Project Information and Fire & Life Safety Information sections are to be completed for all projects and imaged onto the fire access site plan. When an alternate design/means is proposed, all sections on pages 1 and 2 are to be completed and imaged on the fire access site plan.

For additional information refer to the instructions at the end of this form and DSA Policy *PL 09-01: Fire Flow for Buildings*.

PROJECT INFORMATION	
School District/Owner:	COLLEGE OF THE SEQUOIAS
Project Name/School:	COLLEGE OF THE SEQUOIAS - TULARE CAMPUS CTE
Project Address:	4999 EAST BARDSLEY AVE, TULARE, CA 93274

FIRE & LIFE SAFETY INFORMATION			
1.	Has a fire hydrant flow test been performed within the past 12 months? *(If yes, provide a copy of the test data.)*	Yes X	No ☐
2.	Was the fire hydrant water flow test performed as part of this LFA review?	Yes X	No ☐
3.	Is the project located within a designated fire hazard severity zone (FHSZ) as established by Cal-Fire? *(If yes, indicate FHSZ classification below.)*	Yes ☐	No X
	Refer to the following website for FHSZ locations: http://egis.fire.ca.gov/FHSZ/	Moderate ☐ High ☐	Very High ☐
	Wildland Interface Area (WIFA) *(If any designations are checked, project design must meet the requirements of CBC Chapter 7A.)*		WIFA ☐

DGS DSA 810 (revised 12/29/20) DIVISION OF THE STATE ARCHITECT — DEPARTMENT OF GENERAL SERVICES — Page 1 of 4 STATE OF CALIFORNIA

DSA 810
FIRE & LIFE SAFETY SITE CONDITIONS SUBMITTAL

CONDITION MEANS AND METHODS RESOLUTION		ALTERNATE ACCEPTED			
		Yes	No	N/A	N/R
4.	Emergency vehicle access roadways do not meet CFC requirements.			X	
4a.	**Acceptable Alternate:** Emergency vehicle and personnel access as proposed by the project architect is acceptable for providing fire suppression and protection of life and property.				
5.	**Fire Hydrants:** Number and spacing does not meet CFC requirements.			X	
5a.	**Acceptable Alternate:** Number of fire hydrants and spacing as proposed by the project architect is acceptable for fire suppression and protection of life and property.				
6.	**Fire Hydrants:** Water flow and pressure are less than CFC minimum.			X	
6a.	**Acceptable Alternate:** The available flow and pressure is acceptable for providing fire suppression and protection of life and property.				
7.	Location of fire department connection(s) serving fire sprinkler systems or standpipe systems does not meet CFC requirements.			X	
7a.	**Acceptable Alternate:** The location of fire department connection serving the fire sprinkler system and/or standpipe system is acceptable for providing fire suppression and protection of life and property.				

School District Acceptance of Acceptable Design Alternates

By signing this form, the school district acknowledges and accepts the proposed design as an alternative to California Building Code (CBC) and California Fire Code (CFC) minimum requirements, as indicated by one or more of the conditions indicated at items 4a, 5a, 6a or 7a, for providing fire and life safety protection of life and property.

Accepted by: _____ Title: _____

Signature: _____ Date: _____

LOCAL FIRE AUTHORITY (LFA) INFORMATION			
LFA Agency Name:	City of Tulare Fire		
LFA Review Official:	Ryan Leonardo		
Title:	Fire Marshal	Work Phone:	(559)684-4365
Work Email:	rleonardo@tulare.ca.gov		

LFA Reviewer's Signature: _____ Date: 10/18/22

DGS DSA 810 (revised 12/29/20) DIVISION OF THE STATE ARCHITECT — DEPARTMENT OF GENERAL SERVICES — Page 2 of 4 STATE OF CALIFORNIA

PLOT DATE: 10/14/2022 4:09:39 PM

SITE PLAN — 1" = 30'-0" — 10

FOR BID ONLY

Teter, LLP expressly reserves its common law copyright and other property rights in these plans. This document, the ideas and designs incorporated herein, as an instrument of professional service, is not to be used in whole or in part, for any other project without prior written authorization.

MARK	DATE	DESCRIPTION
	11/1/2022	DSA RESUBMITTAL

LICENSED ARCHITECT JOSHUA COLLIER C-29893 STATE OF CALIFORNIA

TETER, LLP
ARCHITECTS ENGINEERS CONNECTED
FRESNO HEADQUARTERS
VISALIA | BAKERSFIELD | MODESTO | SAN LUIS OBISPO

TULARE CAMPUS CTE
COLLEGE OF THE SEQUOIAS
4999 E. BARDSLEY AVE.
TULARE, CA

DRAWING TITLE
FIRE AUTHORITY SITE PLAN

PROJECT NO.
21-12032

DRAWING
A100F

\\tetr-file1\Users\ryan.odom\Documents\12032-A-COS Tulare CTE_ryan.odomNLB27.rvt

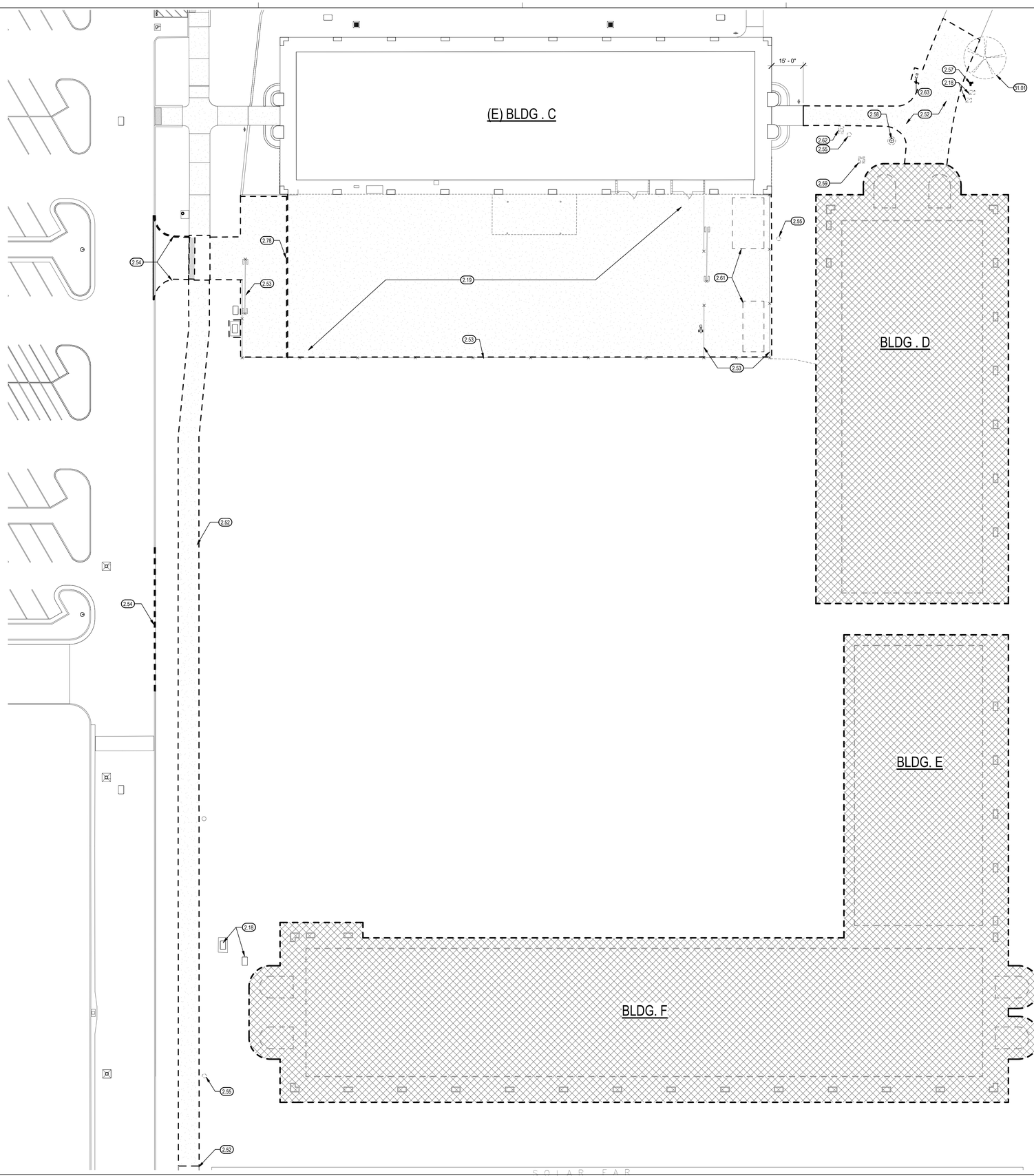

KEYNOTES (XX.XX)

2.18	EXISTING UTILITY BOXES TO REMAIN
2.19	EXISTING CONCRETE PAVING TO REMAIN
2.52	REMOVE EXISTING CONCRETE WALK, SAWCUT AT NEAREST JOINT. SEE CIVIL PLANS. TYP.
2.53	REMOVE EXISTING CHAIN LINK FENCE AND SALVAGE FABRIC, POST AND HORIZONTAL RAILS TO OWNER.
2.54	REMOVE EXISTING CONCRETE CURB/MOWSTRIP/GUTTER AS REQUIRED TO ACCOMMODATE NEW CONSTRUCTION, COORDINATE EXTENT OF WORK WITH CIVIL
2.55	REMOVE EXISTING LIGHT POLE, SEE ELECTRICAL
2.57	REMOVE EXISTING FIRE HYDRANT, SEE CIVIL PLANS
2.58	REMOVE EXISTING MAN HOLE AND SEWAGE LINE, SEE CIVIL PLANS
2.59	REMOVE EXISTING STORM DRAIN, SEE CIVIL PLANS
2.61	REMOVE EXISTING STORAGE SHEDS SALVAGE, STORE AND REINSTALL IN NEW YARD (NO ASSOCIATED UTILITIES)
2.62	REMOVE EXISTING PULL BOX, SEE ELECTRICAL AND CIVIL PLANS
2.63	REMOVE EXISTING DRINKING FOUNTAIN AND CAP WATER LINES, SALVAGE DRINKING FOUNTAIN TO OWNER. SEE CIVIL
2.78	SAWCUT AND REMOVE PORTION OF EXISTING CONCRETE PAVING
31.01	REMOVE EXISTING TREE, COORDINATE EXTENT OF WORK WITH LANDSCAPE

LEGEND

	EXISTING CONC. PAVING TO REMAIN, SEE CIVIL.
	CONC. PAVING TO BE REMOVED, SEE CIVIL.
LS	LANDSCAPE AREA, SEE LANDSCAPE.
	LIGHT POLE, SEE ELECTRICAL.
	PATHWAY LIGHT BOLLARD, SEE ELECTRICAL.
(E) F.H.	EXISTING FIRE HYDRANT TO REMAIN
	EXISTING BUILDING NOT INCLUDED IN SCOPE OF WORK
	NEW BUILDING FOOTPRINT FOR REFERENCE ONLY
	AREA OF DEMOLITION AND SITE PREP FOR NEW BUILDINGS, COORDINATE WITH CIVIL - REROUTE EXISTING UTILITIES BELOW GRADE PER CIVIL, PLUMBING, AND ELECTRICAL
	PROPERTY LINE

GENERAL NOTES

A. THE CONTRACTOR SHALL ACCEPT THE SITE IN ITS PRESENT CONDITION & DEMOLISH AND/OR REMOVE FROM THE AREA OF THE PROJECT ALL STRUCTURES, BOTH SURFACE & SUBSURFACE, TREES, BRUSH, ROOTS, DEBRIS, ORGANIC MATTER, & ALL OTHER MATTER DETERMINED BY THE INSPECTOR TO BE DELETERIOUS. SUCH MATERIAL SHALL BE REMOVED FROM THE SITE BY THE CONTRACTOR.

B. EXCAVATIONS SHALL BE ADEQUATELY SHORED, BRACED & SHEETED SO THAT THE EARTH WILL NOT SLIDE OR SETTLE & SO THAT ALL EXISTING IMPROVEMENTS OF ANY KIND WILL BE FULLY PROTECTED FROM DAMAGE. WHERE THE EXCAVATION FOR A CONDUIT TRENCH, AND/OR STRUCTURE IS FIVE FEET OR MORE IN DEPTH, THE CONTRACTOR SHALL PROVIDE ADEQUATE SHEETING, CONFORMING TO THE APPLICABLE CONSTRUCTION SAFETY ORDERS OF THE DIVISION OF INDUSTRIAL SAFETY OF THE STATE OF CALIFORNIA. THE CONTRACTOR SHALL COMPLY WITH OSHA REQUIREMENTS AT ALL TIMES.

C. FINISH GRADE SHALL HAVE A 1.5% SLOPE AWAY FROM THE BLDG. FOR A DISTANCE NOT LESS THAN 5'-0" FROM THE BLDG.

D. EXISTING UNDERGROUND UTILITIES & IMPROVEMENTS ARE SHOWN IN THEIR APPROX. LOCATIONS BASED UPON RECORD INFO. AVAILABLE TO THE ARCHITECT AT THE TIME OF PREPARATION OF THESE PLANS. LOCATIONS MAY NOT HAVE BEEN VERIFIED IN THE FIELD & NO GUARANTEE IS MADE AS TO THE ACCURACY OR COMPLETENESS OF THE INFO. SHOWN. THE CONTRACTOR SHALL NOTIFY UTILITY COMPANIES AT LEAST 2 WORKING DAYS IN ADVANCE OF CONSTRUCTION TO FIELD LOCATE UTILITIES. CALL UNDERGROUND SERVICE ALERT (U.S.A), 1-800-642-2444.

E. REFER TO CIVIL, LANDSCAPE, PLUMBING & ELECTRICAL FOR UTILITY INFORMATION. CONTRACTOR TO COORDINATE ALL TRADES TO MAINTAIN PROPER CLEARANCES & AVOID CONFLICTS.

NORTH

0' 10' 20' 40' 80'

1" = 20'-0"

SOLAR FAR

ENLARGED DEMOLITION SITE PLAN

10

PLOT DATE: 11/1/2022 9:55:32 PM

FOR BID ONLY

Teter, LLP expressly reserves its common law copyright and other property rights in these plans. This document, the ideas and designs incorporated herein, as an instrument of professional service, is not to be used in whole or in part, for any other project without prior written authorization.

MARK	DATE	DESCRIPTION
	11/1/2022	DSA RESUBMITTAL

LICENSED ARCHITECT ★ VINOD KUMAR GUPTA ★ No. C-23693 ★ STATE OF CALIFORNIA

TETER, LLP
FRESNO HEADQUARTERS
VISALIA | BAKERSFIELD | MODESTO | SAN LUIS OBISPO
ARCHITECTS ENGINEERS CONNECTED

TETER

TULARE CAMPUS CTE
COLLEGE OF THE SEQUOIAS
4999 E. BARDSLEY AVE.
TULARE, CA

DRAWING TITLE
ENLARGED DEMOLITION SITE PLAN

PROJECT NO.
21-12032

DRAWING
A101

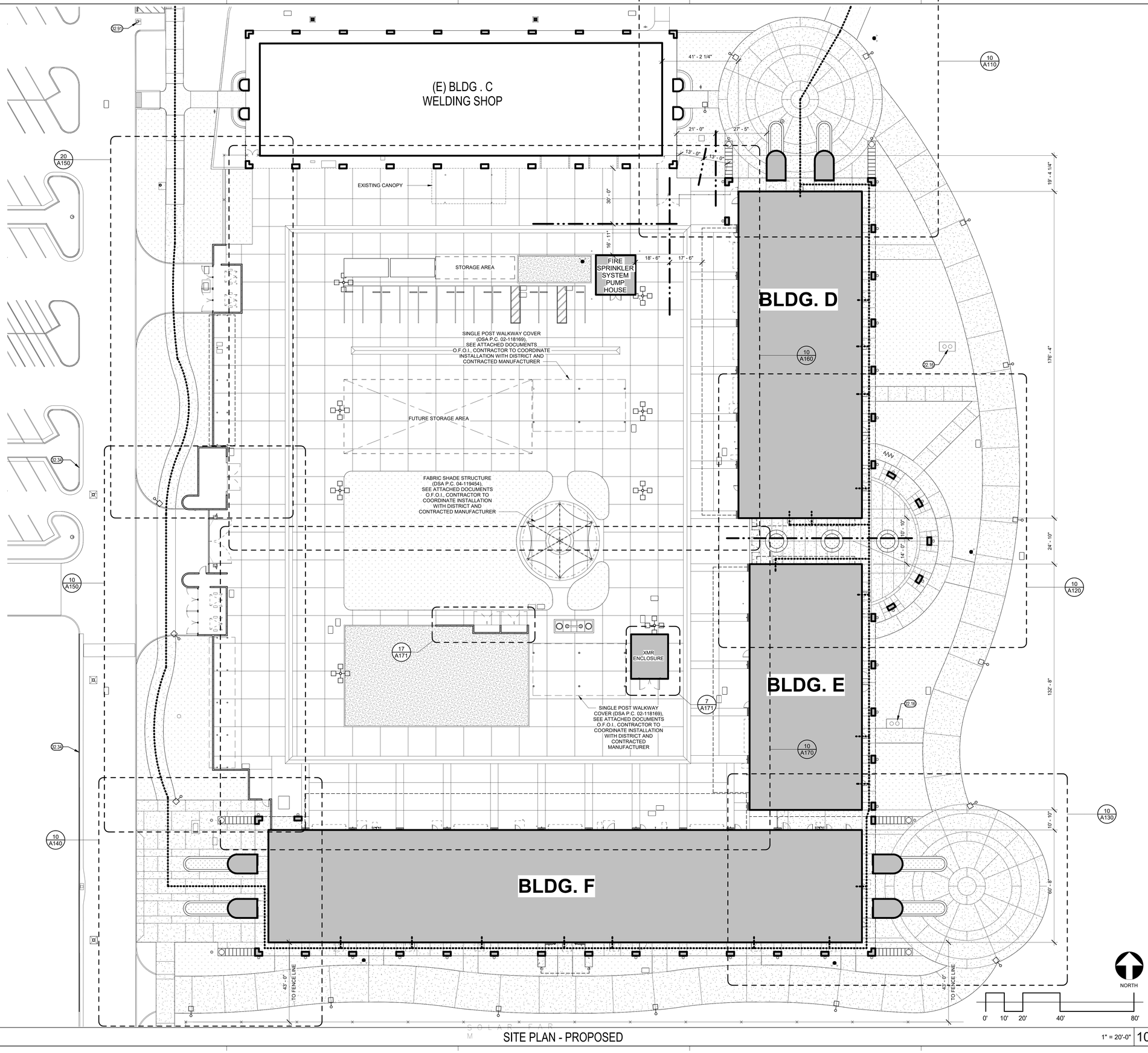

KEYNOTES (XX.XX)

22.16	SAND/OIL INTERCEPTOR, SEE PLUMBING
32.34	PAINT EXISTING CONCRETE CURB RED WITH "FIRE LANE NO PARKING" PAINTED WHITE (3" MIN. HIGH, 1/2" MIN. STROKE) @ 25' o.c. MAX. ON SIDE OF CURB FACING STREET
32.91	ACCESSIBLE PARKING, SEE CIVIL

LEGEND

- CONC. PAVING, SEE CIVIL.
- DIRT PIT, SEE CIVIL.
- LS — LANDSCAPE AREA, SEE LANDSCAPE.
- LIGHT POLE, SEE ELECTRICAL.
- PATHWAY LIGHT BOLLARD, SEE ELECTRICAL.
- POLL-MOUNTED LIGHT FIXTURE, SEE ELECTRICAL.
- F.H. — FIRE HYDRANT, SEE CIVIL.
- IMAGINARY PROPERTY LINE, BETWEEN SAME-SITE BUILDINGS
- PROPOSED BUILDING
- EXISTING BUILDING
- ACCESSIBLE ROUTE (2019 C.B.C. SECTION 11B - 206)

THE ACCESSIBLE ROUTE IS A CONTINUOUS UNOBSTRUCTED PATH CONNECTING ACCESSIBLE ELEMENTS AND SPACES OF AN ACCESSIBLE SITE, BUILDING OR FACILITY THAT CAN BE NEGOTIATED BY A PERSON WITH A DISABILITY USING A WHEELCHAIR, AND THAT IS ALSO SAFE FOR AND USABLE BY PERSONS WITH OTHER DISABILITIES. ACCESSIBLE ROUTES SHALL COMPLY WITH CBC 11B-402. IN GENERAL, EXTERIOR ACCESSIBLE ROUTES SHALL COMPLY WITH THE FOLLOWING: SHALL BE STABLE, FIRM, AND SLIP RESISTANT; HAVE A 1:20 MAXIMUM RUNNING SLOPE FOR WALKS; HAVE A 1:12 MAXIMUM SLOPE FOR RAMPS AND CURB RAMPS; HAVE A 1/4:12 MAXIMUM CROSS SLOPE; HAVE A 48" MINIMUM WIDTH; HAVE NO VERTICAL OFFSETS GREATER THAN 1/4"; OFFSETS BETWEEN 1/4" AND 1/2" SHALL BE BEVELED WITH A SLOPE NOT EXCEEDING 1V:2H; HAVE NO OPENINGS ALLOWING THE PASSAGE OF A 1/2" DIAMETER SPHERE; ELONGATED OPENINGS SHALL BE PERPENDICULAR TO THE DIRECTION OF TRAVEL; HAVE A MINIMUM 6" HIGH CURB OR GUARDRAIL AT EDGES WHERE THE DROP OFF EXCEEDS 4" EXCEPT WHERE ADJACENT TO VEHICULAR WAYS; BE FREE OF ELEMENTS PROJECTING MORE THAN 4" FROM WALLS BETWEEN 27" AND 80" ABOVE THE WALKING SURFACE; AND HAVE 80" MINIMUM VERTICAL CLEARANCE.

DESIGN PROFESSIONAL IN CHARGE STATEMENT:

- THE P.O.T. IDENTIFIED IN THESE CONSTRUCTION DOCUMENTS MEETS THE REQUIREMENTS OF THE CURRENT APPLICABLE CALIFORNIA BUILDING CODE (CBC) ACCESSIBILITY PROVISIONS FOR PATH OF TRAVEL REQUIREMENTS FOR ALTERATIONS, ADDITIONS AND STRUCTURAL REPAIRS.
- AS PART OF THE DESIGN OF THIS PROJECT, THE P.O.T. WAS EXAMINED AND ANY ELEMENTS, COMPONENTS, OR PORTIONS OF THE P.O.T. THAT WERE DETERMINED TO BE NONCOMPLIANT WITH THE CBC HAVE BEEN IDENTIFIED AND THE CORRECTIVE WORK NECESSARY TO BRING THEM INTO COMPLIANCE HAS BEEN INCLUDED WITHIN THE SCOPE OF THIS PROJECT'S WORK THROUGH DETAILS, DRAWINGS, AND SPECIFICATIONS INCORPORATED INTO THESE CONSTRUCTION DOCUMENTS.
- ANY NONCOMPLIANT ELEMENTS, COMPONENTS OR PORTIONS OF THE P.O.T. THAT WILL NOT BE CORRECTED BY THIS PROJECT BASED ON VALUATION THRESHOLD LIMITATIONS OR A FINDING OF UNREASONABLE HARDSHIP ARE INDICATED IN THESE CONSTRUCTION DOCUMENTS.
- DURING CONSTRUCTION, IF P.O.T. ITEMS WITHIN THE SCOPE OF THE PROJECT REPRESENTED AS CBC COMPLIANT ARE FOUND TO BE NONCONFORMING BEYOND REASONABLE CONSTRUCTION TOLERANCES, THEY ITEMS SHALL BE BROUGHT INTO COMPLIANCE WITH THE CBC AS A PART OF THIS PROJECT BY MEANS OF A CONSTRUCTION CHANGE DOCUMENT.

GENERAL NOTES

A. THE CONTRACTOR SHALL ACCEPT THE SITE IN ITS PRESENT CONDITION & DEMOLISH AND/OR REMOVE FROM THE AREA OF THE PROJECT ALL STRUCTURES, BOTH SURFACE & SUBSURFACE, TREES, BRUSH, ROOTS, DEBRIS, ORGANIC MATTER, & ALL OTHER MATTER DETERMINED BY THE INSPECTOR TO BE DELETERIOUS. SUCH MATERIAL SHALL BE REMOVED FROM THE SITE BY THE CONTRACTOR.

B. EXCAVATIONS SHALL BE ADEQUATELY SHORED, BRACED & SHEETED SO THAT THE EARTH WILL NOT SLIDE OR SETTLE & SO THAT ALL EXISTING IMPROVEMENTS OF ANY KIND WILL BE FULLY PROTECTED FROM DAMAGE. WHERE THE EXCAVATION FOR A CONDUIT TRENCH, AND/OR STRUCTURE IS FIVE FEET OR MORE IN DEPTH, THE CONTRACTOR SHALL PROVIDE ADEQUATE SHEETING, CONFORMING TO THE APPLICABLE CONSTRUCTION SAFETY ORDERS OF THE DIVISION OF INDUSTRIAL SAFETY OF THE STATE OF CALIFORNIA. THE CONTRACTOR SHALL COMPLY WITH OSHA REQUIREMENTS AT ALL TIMES.

C. FINISH GRADE SHALL HAVE A 1.5% SLOPE AWAY FROM THE BLDG. FOR A DISTANCE NOT LESS THAN 5'-0" FROM THE BLDG.

D. EXISTING UNDERGROUND UTILITIES & IMPROVEMENTS ARE SHOWN IN THEIR APPROX. LOCATIONS BASED UPON RECORD INFO. AVAILABLE TO THE ARCHITECT AT THE TIME OF PREPARATION OF THESE PLANS. LOCATIONS MAY NOT HAVE BEEN VERIFIED IN THE FIELD & NO GUARANTEE IS MADE AS TO THE ACCURACY OR COMPLETENESS OF THE INFO. SHOWN. THE CONTRACTOR SHALL NOTIFY UTILITY COMPANIES AT LEAST 2 WORKING DAYS IN ADVANCE OF CONSTRUCTION TO FIELD LOCATE UTILITIES. CALL UNDERGROUND SERVICE ALERT (U.S.A). 1-800-642-2444.

E. REFER TO CIVIL, LANDSCAPE, PLUMBING & ELECTRICAL FOR UTILITY INFORMATION. CONTRACTOR TO COORDINATE ALL TRADES TO MAINTAIN PROPER CLEARANCES & AVOID CONFLICTS.

SITE PLAN - PROPOSED

1" = 20'-0" | 10

\\tetr-file1\Users\ryan.odom\Documents\12032-A-COS Tulare CTE_ryan.odomNLB27.rvt
PLOT DATE: 11/1/2022 9:55:41 PM

FOR BID ONLY

Teter, LLP expressly reserves its common law copyright and other property rights in these plans. This document, the ideas and designs incorporated herein, as an instrument of professional service, is not to be used in whole or part, for any other project without prior written authorization.

MARK	DATE	DESCRIPTION
	11/1/2022	DSA RESUBMITTAL

LICENSED ARCHITECT * VINCENT LOUIS QUIJADA * No. C-32683 * STATE OF CALIFORNIA

TETER, LLP
FRESNO HEADQUARTERS
VISALIA | BAKERSFIELD | MODESTO | SAN LUIS OBISPO
ARCHITECTS ENGINEERS CONNECTED

TULARE CAMPUS CTE
COLLEGE OF THE SEQUOIAS
4999 E. BARDSLEY AVE.
TULARE, CA

PROJECT NO. 21-12032

DRAWING TITLE: ENLARGED PROPOSED SITE PLAN

DRAWING A102

\\tetr-file1\Users\ryan.odom\Documents\12032-A-COS Tulare CTE_ryan.odomNLB27.rvt

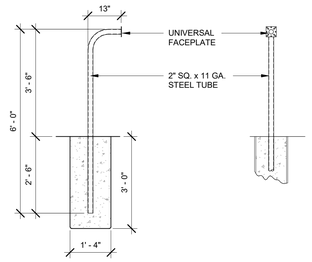

PEDESTAL MOUNT 1/2" = 1'-0" 6

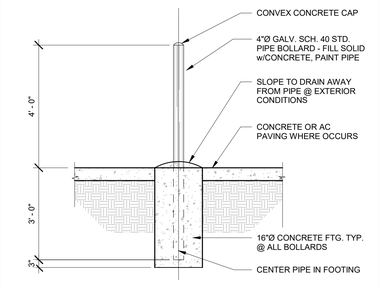

CONCRETE FILLED

BOLLARDS - PIPE 1/2" = 1'-0" 1

NOTES:
1. SIZE: NUMBER OF BIKES / SIZE OF RACK PER SPECIFICATIONS AND / OR DRAWINGS.
2. CONFIRM / VERIFY DIMENSIONS W/ MANUFACTURER.

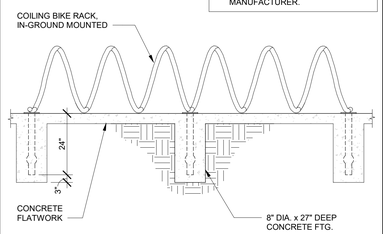

COILING BIKE RACK 1/2" = 1'-0" 2

DOOR 'D'
DOOR 'E1' SIM.

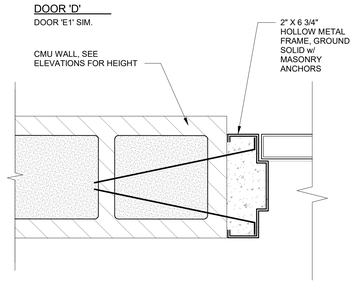

CMU H.M. FRAMING 3" = 1'-0" 8

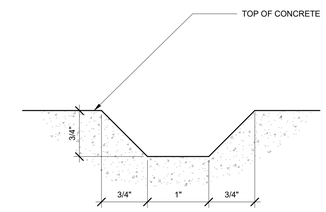

SEAT WALL "U" REVEAL 12" = 1'-0" 3

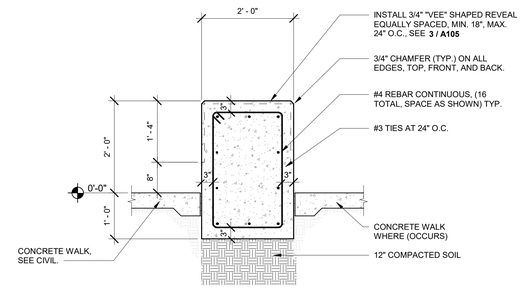

SEATING WALL @ CIRCULAR PLANTER 3/4" = 1'-0" 4

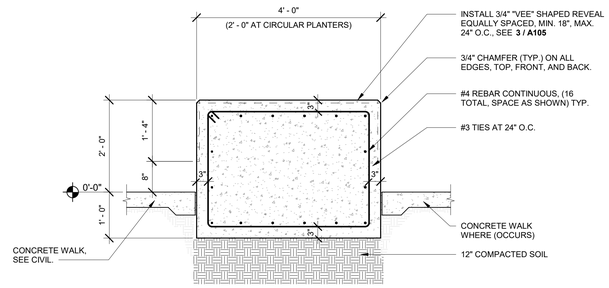

SEATING WALL @ PLANTER 3/4" = 1'-0" 5

PLOT DATE: 11/1/2022 9:55:45 PM

FOR BID ONLY

Teter, LLP expressly reserves its common law copyright and other property rights in these plans. This document, the ideas and designs incorporated herein, as an instrument of professional service, is not to be used in whole or part, for any other project without prior written authorization.

MARK	DATE	DESCRIPTION
	11/1/2022	DSA RESUBMITTAL

TETER, LLP
ARCHITECTS ENGINEERS CONNECTED
FRESNO HEADQUARTERS
VISALIA I BAKERSFIELD I MODESTO I SAN LUIS OBISPO

TULARE CAMPUS CTE
COLLEGE OF THE SEQUOIAS
4999 E. BARDSLEY AVE.
TULARE, CA

DRAWING TITLE
SITE DETAILS

PROJECT NO.
21-12032

DRAWING
A105

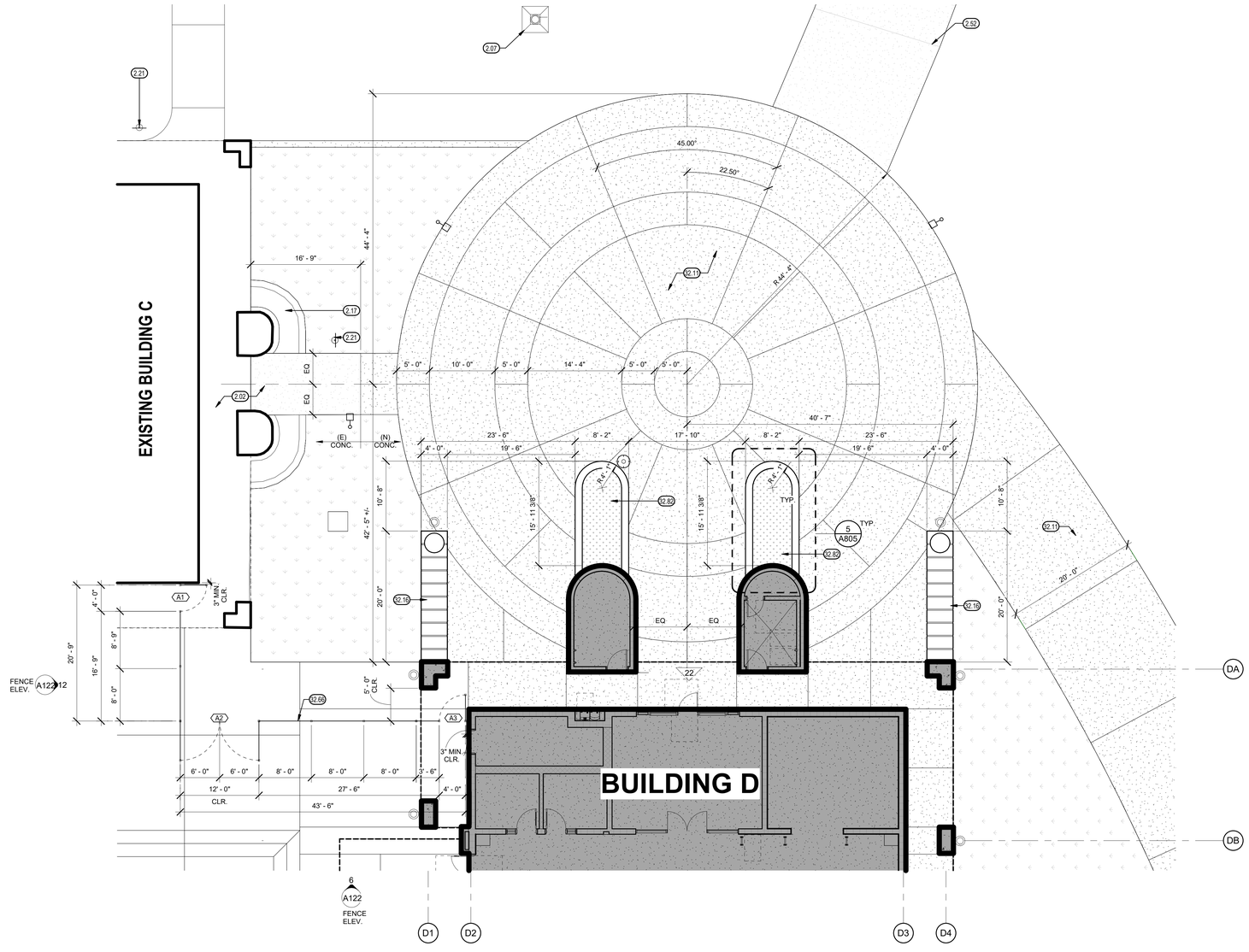

KEYNOTES (00.00)

2.02	EXISTING CONCRETE PAVING/WALK TO REMAIN, PROTECT DURING CONSTRUCTION
2.07	EXISTING STORM DRAIN UTILITIES TO REMAIN, SEE CIVIL
2.17	EXISTING PLANTER TO REMAIN
2.21	EXISTING CAMPUS SIGNAGE TO REMAIN
2.52	REMOVE EXISTING CONCRETE WALK, SAWCUT AT NEAREST JOINT. SEE CIVIL PLANS. TYP.
32.11	CONCRETE PAVING/WALK, SLOPE TO DRAIN AWAY FROM BUILDING, SEE CIVIL
32.16	CAST-IN-PLACE CONCRETE BENCH, SEE **5 / A105**
32.66	DECORATIVE METAL FENCING, 8'-0" FT HIGH, SEE **5 / A122**
32.82	PLANTER AREA, SEE LANDSCAPE

LEGEND

- EXISTING CONC. PAVING, SEE CIVIL.
- CONC. PAVING, SEE CIVIL.
- DIRT TRAINING AREA, SEE CIVIL.
- LS — LANDSCAPE AREA, SEE LANDSCAPE.
- LIGHT POLE, SEE ELECTRICAL.
- PATHWAY LIGHT BOLLARD, SEE ELECTRICAL.
- F.H. — FIRE HYDRANT, SEE CIVIL.
- MATCH LINE
- ORNAMENTAL FENCE LINE
- PROPOSED BUILDING

GENERAL NOTES

A. FINISH GRADE SHALL HAVE A 1.5% SLOPE AWAY FROM THE BLDG. FOR A DISTANCE NOT LESS THAN 5'-0" FROM THE BLDG.

B. EXTERIOR CONC. LANDINGS AT DOORS SHALL NOT BE MORE THAN 1/2 INCH LOWER THAN DOORWAY THRESHOLD WITH 1/4 INCH PER FOOT SLOPE MAX.

C. SEE CIVIL FOR A.C. & CONC. PAVING SECTIONS, AND CURB DETAILS.

D. REFER TO CIVIL, LANDSCAPE, PLUMBING & ELECTRICAL FOR UTILITY INFORMATION. CONTRACTOR TO COORDINATE ALL TRADES TO MAINTAIN PROPER CLEARANCES & AVOID CONFLICTS.

KEYPLAN

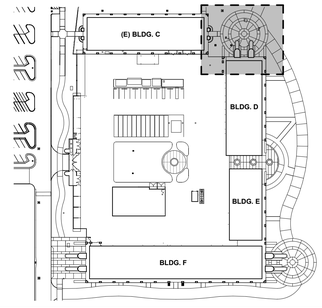

NORTH

0' 4' 8' 16' 32'

ENLARGED SITE PLAN 'A'

1/8" = 1'-0"

10

FOR BID ONLY

Teter, LLP expressly reserves its common law copyright and other property rights in these plans. This document, the ideas and designs incorporated herein, as an instrument of professional service, is not to be used in whole or part, for any other project without prior written authorization.

MARK	DATE	DESCRIPTION
	11/1/2022	DSA RESUBMITTAL

LICENSED ARCHITECT VINCENT J. TETER JR. No. C-23693 STATE OF CALIFORNIA

TETER, LLP
ARCHITECTS ENGINEERS CONNECTED
FRESNO HEADQUARTERS
VISALIA | BAKERSFIELD | MODESTO | SAN LUIS OBISPO
TETER

TULARE CAMPUS CTE
COLLEGE OF THE SEQUOIAS
4999 E. BARDSLEY AVE.
TULARE, CA

DRAWING TITLE
ENLARGED SITE PLAN 'A'

PROJECT NO.
21-12032

DRAWING
A110

\\tetr-file1\Users\ryan.odom\Documents\12032-A-COS Tulare CTE_ryan.odomNLB27.rvt
PLOT DATE: 11/1/2022 9:55:52 PM

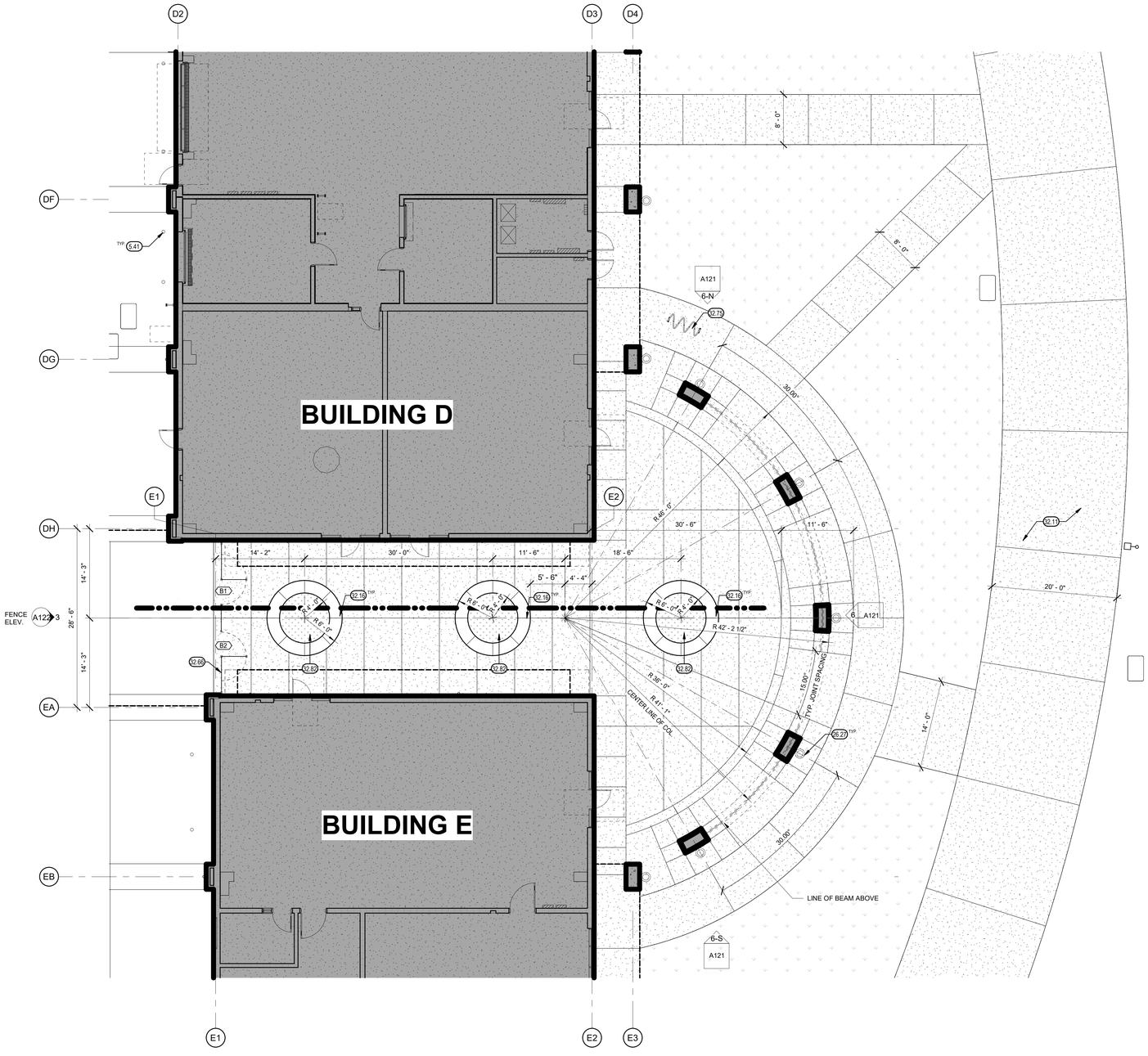

KEYNOTES (XX.XX)

5.41	4" STEEL PIPE BOLLARD WITH CONCRETE FILL, SEE **1 / A105**
26.27	GROUND FLOOD LIGHTS, SEE ELECTRICAL
32.11	CONCRETE PAVING/WALK, SLOPE TO DRAIN AWAY FROM BUILDING, SEE CIVIL
32.16	CAST-IN-PLACE CONCRETE BENCH, SEE **5 / A105**
32.66	DECORATIVE METAL FENCING, 8'-0" FT HIGH, SEE **5 / A122**
32.75	BICYCLE RACK WITH 6 BIKE CAPACITY (4 MIN.), SEE **2 / A105**
32.82	PLANTER AREA, SEE LANDSCAPE

LEGEND

- EXISTING CONC. PAVING, SEE CIVIL.
- CONC. PAVING, SEE CIVIL.
- DIRT TRAINING AREA, SEE CIVIL.
- LS — LANDSCAPE AREA, SEE LANDSCAPE.
- LIGHT POLE, SEE ELECTRICAL.
- PATHWAY LIGHT BOLLARD, SEE ELECTRICAL.
- F.H. — FIRE HYDRANT, SEE CIVIL.
- MATCH LINE
- ORNAMENTAL FENCE LINE
- PROPOSED BUILDING

GENERAL NOTES

A. FINISH GRADE SHALL HAVE A 1.5% SLOPE AWAY FROM THE BLDG. FOR A DISTANCE NOT LESS THAN 5'-0" FROM THE BLDG.

B. EXTERIOR CONC. LANDINGS AT DOORS SHALL NOT BE MORE THAN 1/2 INCH LOWER THAN DOORWAY THRESHOLD WITH 1/4 INCH PER FOOT SLOPE MAX.

C. SEE CIVIL FOR A.C. & CONC. PAVING SECTIONS, AND CURB DETAILS.

D. REFER TO CIVIL, LANDSCAPE, PLUMBING & ELECTRICAL FOR UTILITY INFORMATION. CONTRACTOR TO COORDINATE ALL TRADES TO MAINTAIN PROPER CLEARANCES & AVOID CONFLICTS.

KEYPLAN

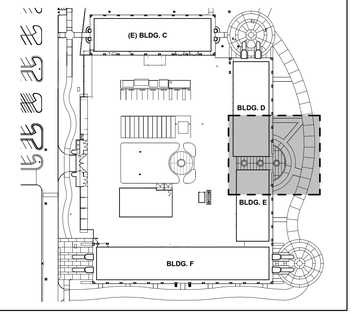

NORTH

0' 4' 8' 16' 32'

1/8" = 1'-0"

Teter, LLP expressly reserves its common law copyright and other property rights in these plans. This document, the ideas and designs incorporated herein, as an instrument of professional service, is not to be used in whole or part, for any other project without prior written authorization.

FOR BID ONLY

MARK	DATE	DESCRIPTION
	11/1/2022	DSA RESUBMITTAL

LICENSED ARCHITECT ★ VINCENT J. QUARTER ★ No. C-23423 ★ STATE OF CALIFORNIA

TETER, LLP
FRESNO HEADQUARTERS
VISALIA I BAKERSFIELD I MODESTO I SAN LUIS OBISPO
ARCHITECTS ENGINEERS CONNECTED

TETER

TULARE CAMPUS CTE
COLLEGE OF THE SEQUOIAS
4999 E. BARDSLEY AVE.
TULARE, CA

DRAWING TITLE
ENLARGED SITE PLAN 'B'

PROJECT NO.
21-12032

DRAWING
A120

\\tetr-file1\Users\ryan.odom\Documents\12032-A-COS Tulare CTE_ryan.odomNLB27.rvt
PLOT DATE: 11/1/2022 9:55:59 PM

\\tetr-file1\Users\ryan.odom\Documents\12032-A-COS Tulare CTE_ryan.odomNLB27.rvt

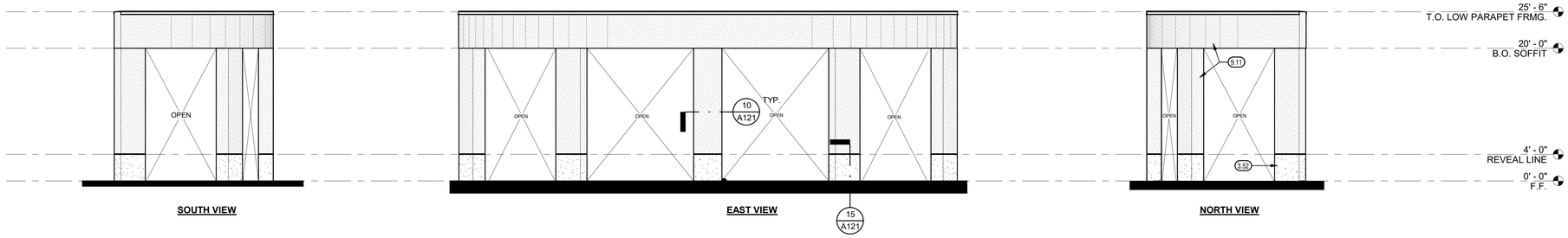

KEYNOTES (KI.KI)

3.52	CAST-IN-PLACE CONCRETE BASE
9.11	CEMENT PLASTER

COLONNADE EAST ELEVATION

1/8" = 1'-0" | 6

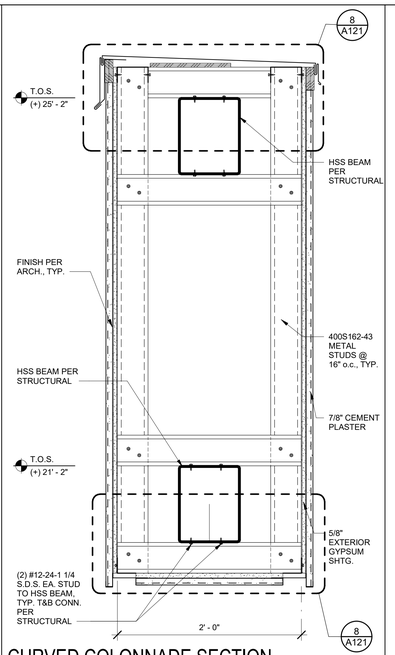

CURVED COLONNADE SECTION CUT @ BEAM

1 1/2" = 1'-0" | 14

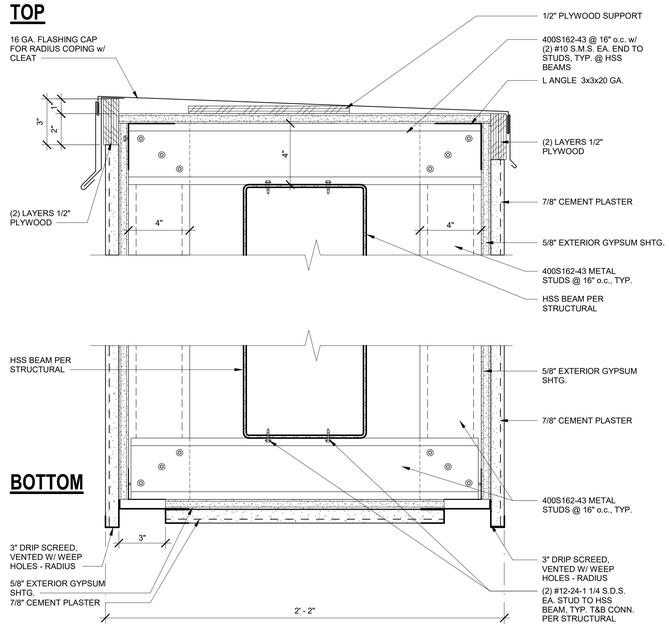

CURVED COLONNADE SECTION CUT @ BEAM

3" = 1'-0" | 8

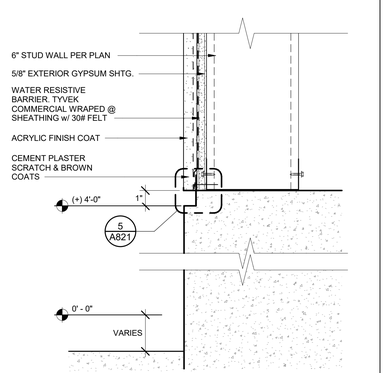

TRELLIS COLUMN BASE

3" = 1'-0" | 15

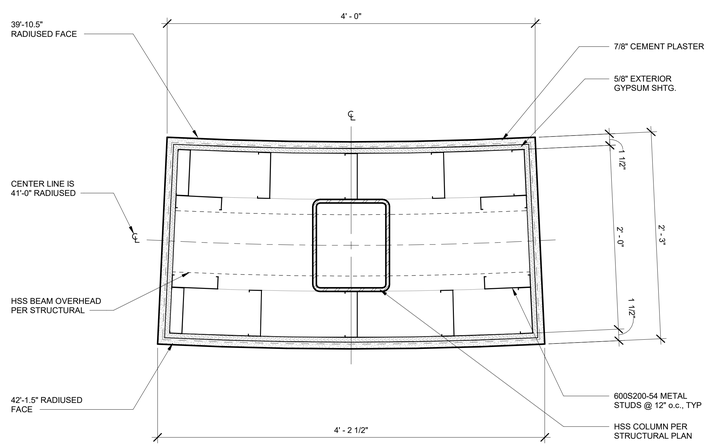

COLUMN CROSS SECTION

1 1/2" = 1'-0" | 10

PLOT DATE: 11/1/2022 9:56:07 PM

FOR BID ONLY

Teter, LLP expressly reserves its common law copyright and other property rights in these plans. This document, the ideas and designs incorporated herein, as an instrument of professional service, is not to be used in whole or part, for any other project without prior written authorization.

MARK	DATE	DESCRIPTION
	11/1/2022	DSA RESUBMITTAL

TETER, LLP
ARCHITECTS ENGINEERS CONNECTED
FRESNO HEADQUARTERS
VISALIA | BAKERSFIELD | MODESTO | SAN LUIS OBISPO

TULARE CAMPUS CTE
COLLEGE OF THE SEQUOIAS
4999 E. BARDSLEY AVE.
TULARE, CA

DRAWING TITLE
SITE DETAILS - COLONNADE

PROJECT NO.
21-12032

DRAWING
A121

\\tetr-file1\Users\ryan.odom\Documents\12032-A-COS Tulare CTE_ryan.odomNLB27.rvt

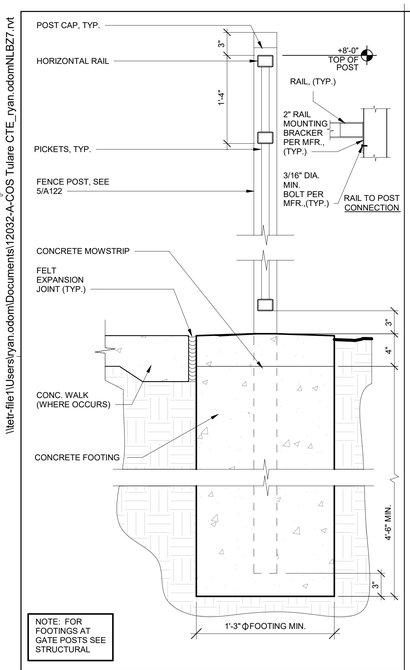

NOTE: FOR FOOTINGS AT GATE POSTS SEE STRUCTURAL

FENCE ORNAMENTAL DETAIL 1 1/2" = 1'-0" | 27

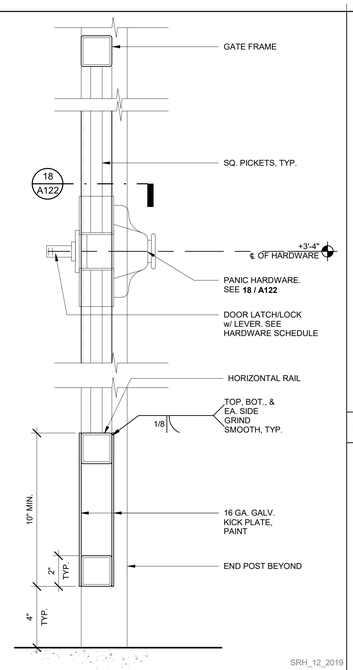

SRH_12_2019

GATE ORNAMENTAL DETAIL 3" = 1'-0" | 22

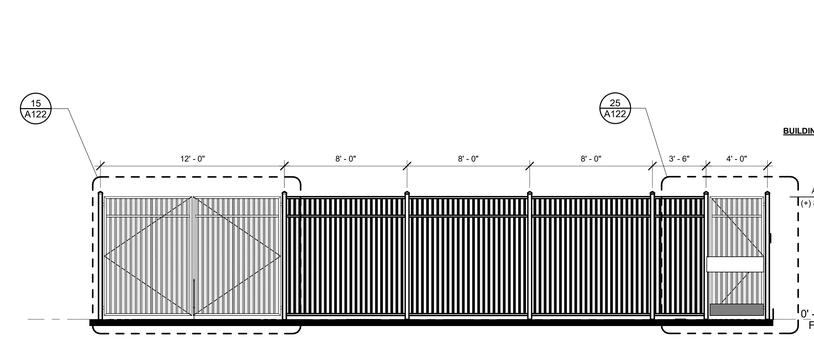

ELEVATION, GATE A2 & A3 1/4" = 1'-0" | 6

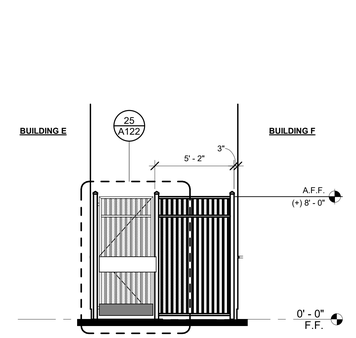

ELEVATION, GATE C1 1/4" = 1'-0" | 1

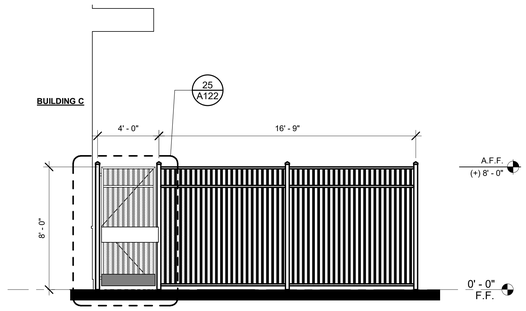

ELEVATION, GATE A1 1/4" = 1'-0" | 12

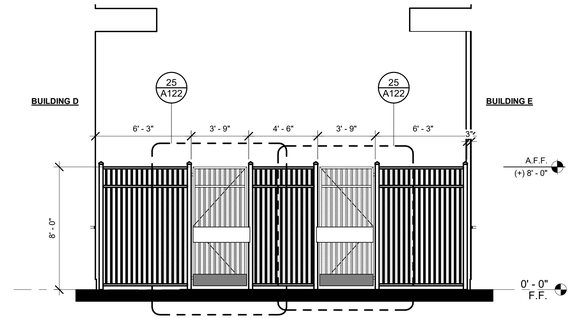

ELEVATION, GATES B1 & B2 1/4" = 1'-0" | 3

GATE SCHEDULE

MARK	CLEAR WIDTH	HEIGHT	MATERIAL	FINISH	HARDWARE GROUP	DETAIL	REMARKS
A1	4' - 0"	8' - 0"	DECORATIVE METAL	FF	G1	**12 / A122**	C
A2	PAIR OF 6' - 0"	8' - 0"	DECORATIVE METAL	FF	G3	**6 / A122**	D
A3	4' - 0"	8' - 0"	DECORATIVE METAL	FF	G1	**6 / A122**	C
B1	4' - 0"	8' - 0"	DECORATIVE METAL	FF	G1	**3 / A122**	C
B2	4' - 0"	8' - 0"	DECORATIVE METAL	FF	G1	**3 / A122**	C
C1	4' - 0"	8' - 0"	DECORATIVE METAL	FF	G1	**1 / A122**	C
D	3' - 8"	7' - 0"	HM	P	G2	**10 / A151**	F
E1	3' - 8"	7' - 0"	HM	P	G2	**10 / A151** SIM.	F
E2	PAIR 12' - 0"	8' - 0"	METAL FRAMED	FF	G3	**10 / A152**	A
E3	PAIR OF 6' - 0"	8' - 0"	METAL FRAMED	FF	G3	**9 / A151**	D
F1	PAIR OF 5' - 11 1/2"	8' - 0"	METAL FRAMED	FF	G3	**7 / A151**	B
F2	PAIR OF 5' - 11 1/2"	8'-0"	METAL FRAMED	FF	G3	**7 / A151**	B
F3	PAIR OF 5' - 11 1/2"	8' - 0"	METAL FRAMED	FF	G3	**7 / A151**	B
F4	PAIR OF 5' - 11 1/2"	8' - 0"	METAL FRAMED	FF	G3	**7 / A151**	B
H1	PAIR OF 7' - 0"	8' - 0"	METAL FRAMED	FF	G3	**18 / A171**	E
H2	PAIR OF 7' - 0"	8' - 0"	METAL FRAMED	FF	G3	**18 / A171**	E
G	PAIR OF 5' - 6"	8' - 0"	METAL FRAMED	FF	G3	**8 / A171**	E

REMARKS:

A. FIRE ACCESS VEHICLE GATE WITH KNOX BOX
B. TRASH ENCLOSURE GATES
C. SECURITY GATE OPERATED BY MAINTENANCE PERSONNEL
D. MAINTENANCE SERVICE GATE WITH PERFORATED MESH PENAL
E. MAINTENANCE SERVICE GATE
F. H.M. DOOR AND FRAME IN CMU WALL

ABBREVIATION:

FF = FACTORY FINISH
P = PAINT

GATE HARDWARE

HW SET: G1

3	EA	HINGE	READYFIT 108	PER MFR.	SURECLOSE
1	EA	PANIC HARDWARE	AXLD99L 996L-PA	626	VON
1	EA	CYBERLOCK CORE	CL-SF-03	626	CYB
1	EA	RIM CYLINDER	80-159	626	SCH

HW SET: G2

4	EA	HINGE	5BB1HW 4.5 X 4.5 NRP	630	IVE
1	EA	PANIC HARDWARE	AXLD99L 996L-PA	626	VON
1	EA	CYBERLOCK CORE	CL-SF-03	626	CYB
1	EA	RIM CYLINDER	80-159	626	SCH
1	EA	SURFACE CLOSER	4041XP-H-EDA	689	LCN
1	EA	OVERHEAD STOP	100S	630	GLY
1	EA	KICKPLATE	8400 10" X 2" LDW B-CS	630	IVE

HW SET: G3

GATE HARDWARE PER SPECIFICATION AND DETAILS INDICATED IN GATE SCHEDULE

NOTE: SEE DOOR HARDWARE SPECIFICATION FOR ADDITIONAL INFORMATION

GATE SCHEDULE 12" = 1'-0" | 30

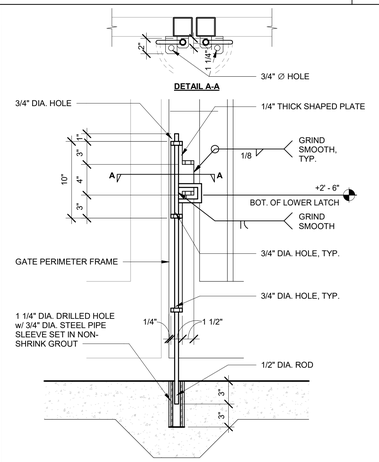

CANE BOLT 1 1/2" = 1'-0" | 24

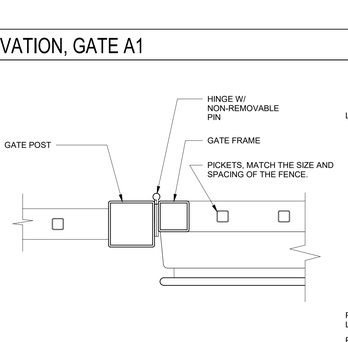

GATE PANIC HARDWARE - ORNAMENTAL 3" = 1'-0" | 18

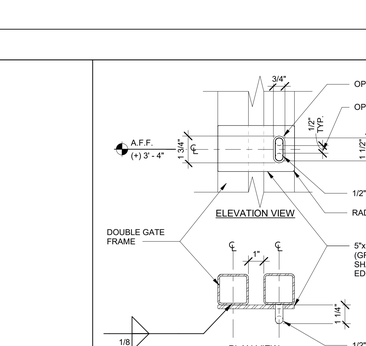

LOCK AT MAINTENCE GATE 3" = 1'-0" | 4

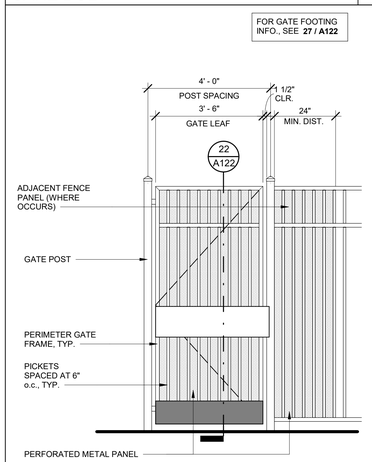

SINGLE DECORATIVE GATE, TYP. 1/2" = 1'-0" | 25

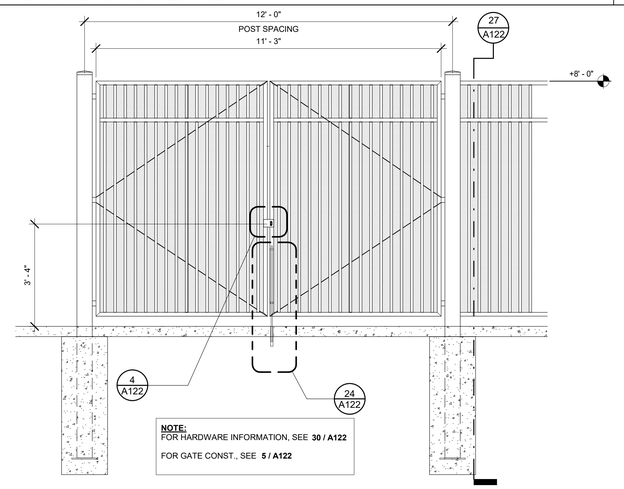

PAIR OF 8'-0" HIGH GATES 1/2" = 1'-0" | 15

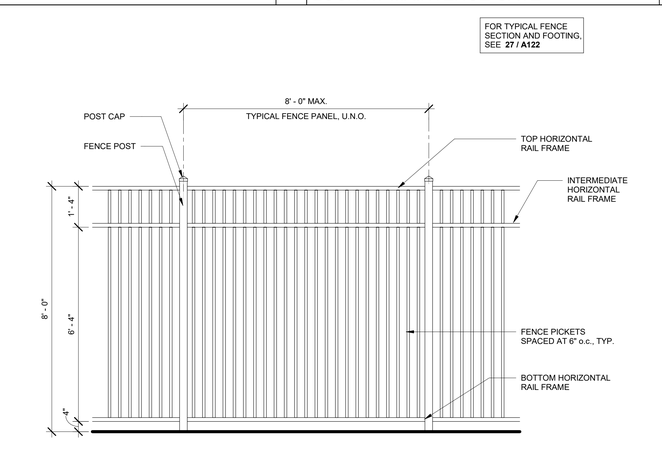

8' - 0" HIGH DECORATIVE FENCING PANEL, TYP. 1/2" = 1'-0" | 5

PLOT DATE: 11/1/2022 9:56:16 PM

FOR BID ONLY

Teter, LLP expressly reserves its common law copyright and other property rights in these plans. This document, the ideas and designs incorporated herein, as an instrument of professional service, is not to be used in whole or in part, for any other project without prior written authorization.

MARK	DATE	DESCRIPTION
	11/1/2022	DSA RESUBMITTAL

TETER, LLP
FRESNO HEADQUARTERS
VISALIA | BAKERSFIELD | MODESTO | SAN LUIS OBISPO
ARCHITECTS ENGINEERS CONSULTANTS

TETER

TULARE CAMPUS CTE
COLLEGE OF THE SEQUOIAS
4999 E. BARDSLEY AVE.
TULARE, CA

DRAWING TITLE
SITE DETAILS - DECORATIVE FENCING

PROJECT NO.
21-12032

DRAWING
A122

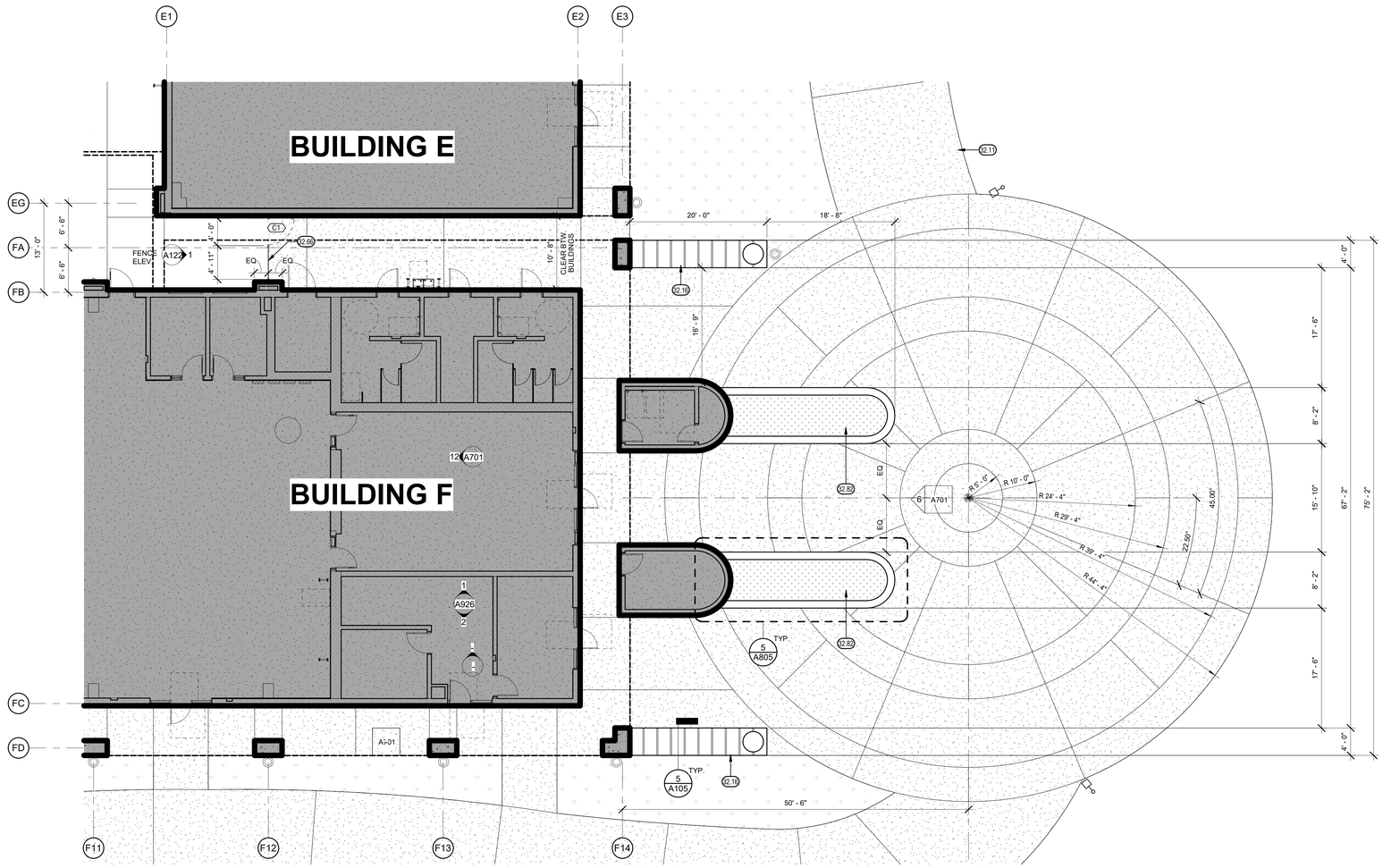

KEYNOTES (X.XX)

32.11	CONCRETE PAVING/WALK, SLOPE TO DRAIN AWAY FROM BUILDING, SEE CIVIL
32.16	CAST-IN-PLACE CONCRETE BENCH, SEE **5 / A105**
32.66	DECORATIVE METAL FENCING, 8'-0" FT HIGH, SEE **5 / A122**
32.82	PLANTER AREA, SEE LANDSCAPE

LEGEND

- EXISTING CONC. PAVING, SEE CIVIL.
- CONC. PAVING, SEE CIVIL.
- DIRT TRAINING AREA, SEE CIVIL.
- LS — LANDSCAPE AREA, SEE LANDSCAPE.
- LIGHT POLE, SEE ELECTRICAL.
- PATHWAY LIGHT BOLLARD, SEE ELECTRICAL.
- F.H. — FIRE HYDRANT, SEE CIVIL.
- MATCH LINE
- ORNAMENTAL FENCE LINE
- PROPOSED BUILDING

GENERAL NOTES

A. FINISH GRADE SHALL HAVE A 1.5% SLOPE AWAY FROM THE BLDG. FOR A DISTANCE NOT LESS THAN 5'-0" FROM THE BLDG.

B. EXTERIOR CONC. LANDINGS AT DOORS SHALL NOT BE MORE THAN 1/2 INCH LOWER THAN DOORWAY THRESHOLD WITH 1/4 INCH PER FOOT SLOPE MAX.

C. SEE CIVIL FOR A.C. & CONC. PAVING SECTIONS, AND CURB DETAILS.

D. REFER TO CIVIL, LANDSCAPE, PLUMBING & ELECTRICAL FOR UTILITY INFORMATION. CONTRACTOR TO COORDINATE ALL TRADES TO MAINTAIN PROPER CLEARANCES & AVOID CONFLICTS.

KEYPLAN

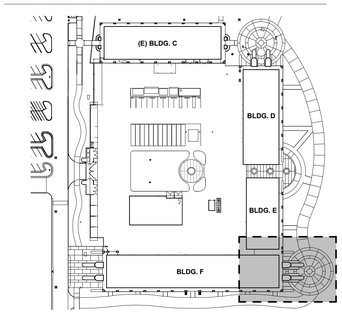

NORTH

0' 4' 8' 16' 32'

ENLARGED SITE PLAN 'C'

1/8" = 1'-0"

10

FOR BID ONLY

Teter, LLP expressly reserves its common law copyright and other property rights in these plans. This document, the ideas and designs incorporated herein, as an instrument of professional service, is not to be used in whole or part, for any other project without prior written authorization.

MARK	DATE	DESCRIPTION
	11/1/2022	DSA RESUBMITTAL

LICENSED ARCHITECT * VINOD KUMAR * No. C 23693 * STATE OF CALIFORNIA

TETER, LLP
FRESNO HEADQUARTERS
VISALIA | BAKERSFIELD | MODESTO | SAN LUIS OBISPO
ARCHITECTS ENGINEERS CONNECTED

TETER

TULARE CAMPUS CTE
COLLEGE OF THE SEQUOIAS
4999 E. BARDSLEY AVE.
TULARE, CA

DRAWING TITLE
ENLARGED SITE PLAN 'C'

PROJECT NO.
21-12032

DRAWING
A130

\\tetr-file1\Users\ryan.odom\Documents\12032-A-COS Tulare CTE_ryan.odomNLB27.rvt

PLOT DATE: 11/1/2022 9:56:23 PM

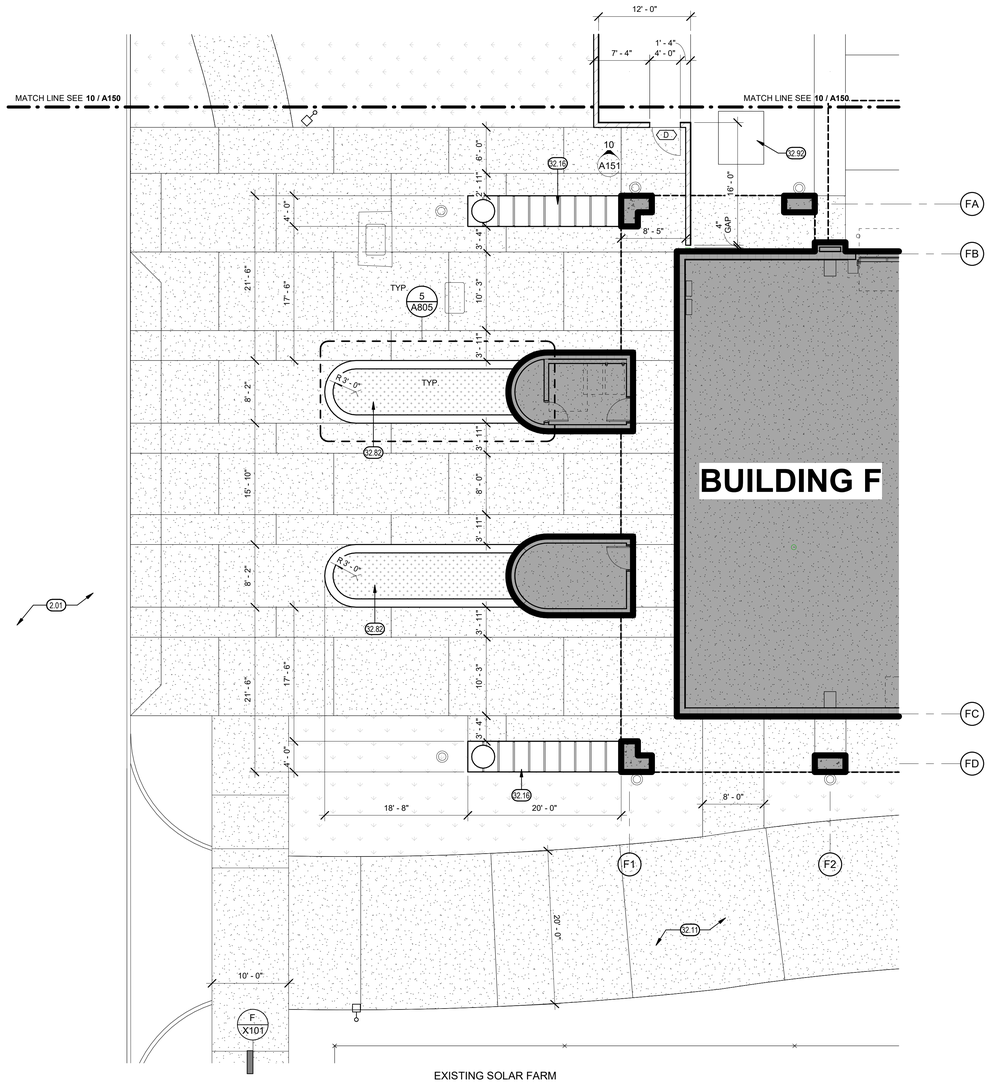

KEYNOTES (X.XX)

2.01	EXISTING AC PAVING
32.11	CONCRETE PAVING/WALK, SLOPE TO DRAIN AWAY FROM BUILDING, SEE CIVIL
32.16	CAST-IN-PLACE CONCRETE BENCH, SEE **5 / A105**
32.82	PLANTER AREA, SEE LANDSCAPE
32.92	DUST COLLECTOR, SEE MECHANICAL DOCUMENTS

LEGEND

- EXISTING CONC. PAVING, SEE CIVIL.
- CONC. PAVING, SEE CIVIL.
- DIRT TRAINING AREA, SEE CIVIL.
- LS — LANDSCAPE AREA, SEE LANDSCAPE.
- LIGHT POLE, SEE ELECTRICAL.
- PATHWAY LIGHT BOLLARD, SEE ELECTRICAL.
- F.H. — FIRE HYDRANT, SEE CIVIL.
- MATCH LINE
- ORNAMENTAL FENCE LINE
- PROPOSED BUILDING

GENERAL NOTES

A. FINISH GRADE SHALL HAVE A 1.5% SLOPE AWAY FROM THE BLDG. FOR A DISTANCE NOT LESS THAN 5'-0" FROM THE BLDG.

B. EXTERIOR CONC. LANDINGS AT DOORS SHALL NOT BE MORE THAN 1/2 INCH LOWER THAN DOORWAY THRESHOLD WITH 1/4 INCH PER FOOT SLOPE MAX.

C. SEE CIVIL FOR A.C. & CONC. PAVING SECTIONS, AND CURB DETAILS.

D. REFER TO CIVIL, LANDSCAPE, PLUMBING & ELECTRICAL FOR UTILITY INFORMATION. CONTRACTOR TO COORDINATE ALL TRADES TO MAINTAIN PROPER CLEARANCES & AVOID CONFLICTS.

KEYPLAN

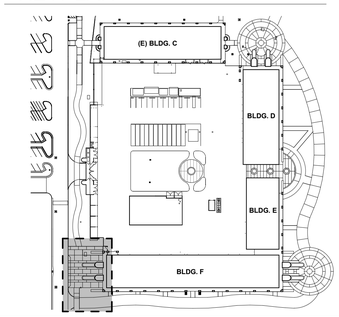

NORTH

0' 4' 8' 16' 32'

1/8" = 1'-0"

ENLARGED SITE PLAN 'D'

10

FOR BID ONLY

Teter, LLP expressly reserves its common law copyright and other property rights in these plans. This document, the ideas and designs incorporated herein, as an instrument of professional service, is not to be used in whole or part, for any purpose without prior written authorization.

MARK	DATE	DESCRIPTION
	11/1/2022	DSA RESUBMITTAL

TETER, LLP
FRESNO HEADQUARTERS
VISALIA | BAKERSFIELD | MODESTO | SAN LUIS OBISPO
ARCHITECTS ENGINEERS CONNECTED

TULARE CAMPUS CTE
COLLEGE OF THE SEQUOIAS
4999 E. BARDSLEY AVE.
TULARE, CA

DRAWING TITLE
ENLARGED SITE PLAN 'D'

PROJECT NO.
21-12032

DRAWING
A140

\\tetr-file1\Users\ryan.odom\Documents\12032-A-COS Tulare CTE_ryan.odomNLB27.rvt

PLOT DATE: 11/1/2022 9:56:29 PM

\\tetr-file1\Users\ryan.odom\Documents\12032-A-COS Tulare CTE_ryan.odomNLB27.rvt

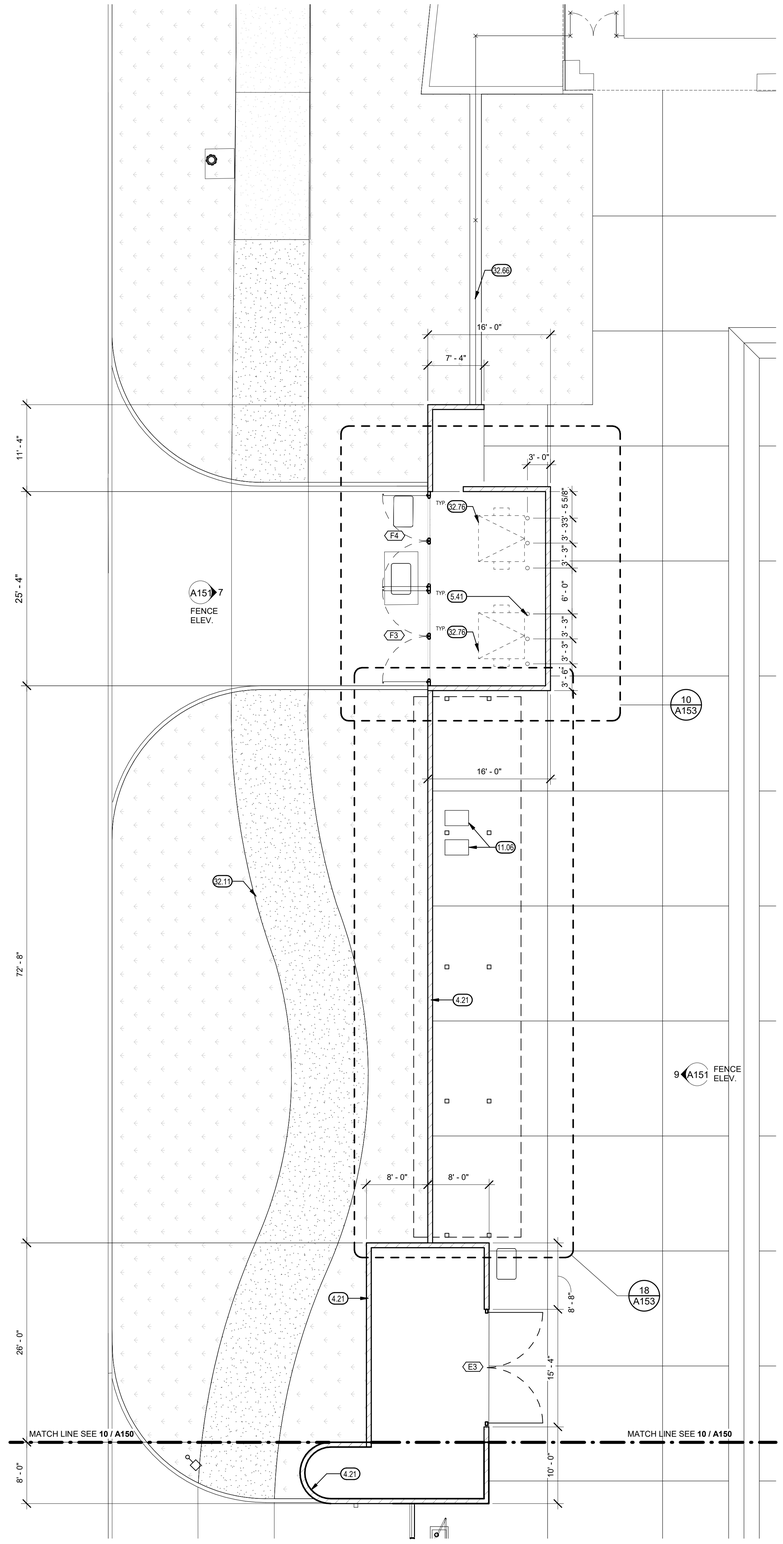

ENLARGED SITE PLAN 'E' 1/8" = 1'-0" | 20

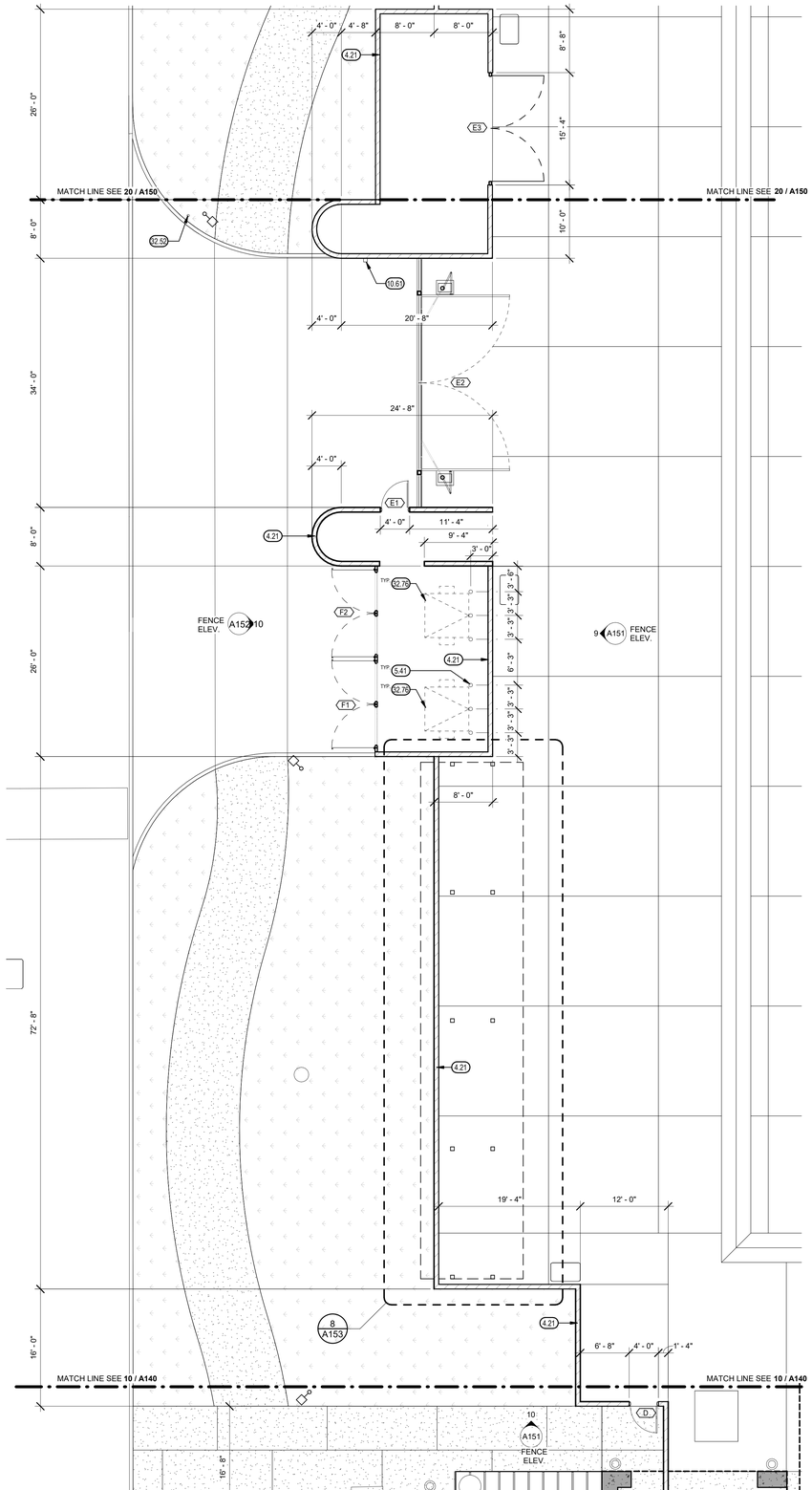

ENLARGED SITE PLAN 'E' 1/8" = 1'-0" | 10

KEYNOTES

4.21	CMU WALL
5.41	4" STEEL PIPE BOLLARD WITH CONCRETE FILL, SEE **1 / A105**
10.61	KNOX BOX, FOR EMERGENCY FIRE/MEDICAL READY ACCESS
11.06	FUTURE PRESSURE WASHER, FURNISHED AND INSTALLED BY OWNER
32.11	CONCRETE PAVING/WALK, SLOPE TO DRAIN AWAY FROM BUILDING, SEE CIVIL
32.16	CAST-IN-PLACE CONCRETE BENCH, SEE **5 / A105**
32.52	GATE CONTROLLER, PEDESTAL MOUNTED, SEE **6 / A105**
32.66	DECORATIVE METAL FENCING, 8'-0" FT HIGH, SEE **5 / A122**
32.76	REFUSE BINS, TYP.

LEGEND

- EXISTING CONC. PAVING, SEE CIVIL.
- CONC. PAVING, SEE CIVIL.
- DIRT TRAINING AREA, SEE CIVIL.
- LS — LANDSCAPE AREA, SEE LANDSCAPE.
- LIGHT POLE, SEE ELECTRICAL.
- PATHWAY LIGHT BOLLARD, SEE ELECTRICAL.
- F.H. — FIRE HYDRANT, SEE CIVIL.
- MATCH LINE
- ORNAMENTAL FENCE LINE
- PROPOSED BUILDING

GENERAL NOTES

A. THE CONTRACTOR SHALL ACCEPT THE SITE IN ITS PRESENT CONDITION & DEMOLISH AND/OR REMOVE FROM THE AREA OF THE PROJECT ALL STRUCTURES, BOTH SURFACE & SUBSURFACE, TREES, BRUSH, ROOTS, DEBRIS, ORGANIC MATTER, & ALL OTHER MATTER DETERMINED BY THE INSPECTOR TO BE DELETERIOUS. SUCH MATERIAL SHALL BE REMOVED FROM THE SITE BY THE CONTRACTOR.

B. EXCAVATIONS SHALL BE ADEQUATELY SHORED, BRACED & SHEETED SO THAT THE EARTH WILL NOT SLIDE OR SETTLE & SO THAT ALL EXISTING IMPROVEMENTS OF ANY KIND WILL BE FULLY PROTECTED FROM DAMAGE. WHERE THE EXCAVATION FOR A CONDUIT TRENCH, AND/OR STRUCTURE IS FIVE FEET OR MORE IN DEPTH, THE CONTRACTOR SHALL PROVIDE ADEQUATE SHEETING, CONFORMING TO THE APPLICABLE CONSTRUCTION SAFETY ORDERS OF THE DIVISION OF INDUSTRIAL SAFETY OF THE STATE OF CALIFORNIA. THE CONTRACTOR SHALL COMPLY WITH OSHA REQUIREMENTS AT ALL TIMES.

C. FINISH GRADE SHALL HAVE A 1.5% SLOPE AWAY FROM THE BLDG. FOR A DISTANCE NOT LESS THAN 5'-0" FROM THE BLDG.

D. EXISTING UNDERGROUND UTILITIES & IMPROVEMENTS ARE SHOWN IN THEIR APPROX. LOCATIONS BASED UPON RECORD INFO. AVAILABLE TO THE ARCHITECT AT THE TIME OF PREPARATION OF THESE PLANS. LOCATIONS MAY NOT HAVE BEEN VERIFIED IN THE FIELD & NO GUARANTEE IS MADE AS TO THE ACCURACY OR COMPLETENESS OF THE INFO. SHOWN. THE CONTRACTOR SHALL NOTIFY UTILITY COMPANIES AT LEAST 2 WORKING DAYS IN ADVANCE OF CONSTRUCTION TO FIELD LOCATE UTILITIES. CALL UNDERGROUND SERVICE ALERT (U.S.A), 1-800-642-2444.

E. REFER TO CIVIL, LANDSCAPE, PLUMBING & ELECTRICAL FOR UTILITY INFORMATION. CONTRACTOR TO COORDINATE ALL TRADES TO MAINTAIN PROPER CLEARANCES & AVOID CONFLICTS.

KEYPLAN

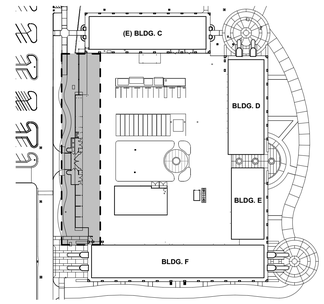

FOR BID ONLY

Teter, LLP expressly reserves its common law copyright and other property rights in these plans. This document, the ideas and designs incorporated herein, as an instrument of professional service, is not to be used in whole or in part, for any other project without prior written authorization.

MARK	DATE	DESCRIPTION
	11/1/2022	DSA RESUBMITTAL

LICENSED ARCHITECT JOHN VINCENT LUKEHART COUNTERS No. C-23621 STATE OF CALIFORNIA

TETER, LLP
FRESNO HEADQUARTERS
VISALIA | BAKERSFIELD | MODESTO | SAN LUIS OBISPO
ARCHITECTS ENGINEERS CONNECTED

TETER

TULARE CAMPUS CTE
COLLEGE OF THE SEQUOIAS
4999 E. BARDSLEY AVE.
TULARE, CA

DRAWING TITLE
ENLARGED SITE PLAN 'E'

PROJECT NO.
21-12032

DRAWING
A150

PLOT DATE: 11/1/2022 9:56:37 PM

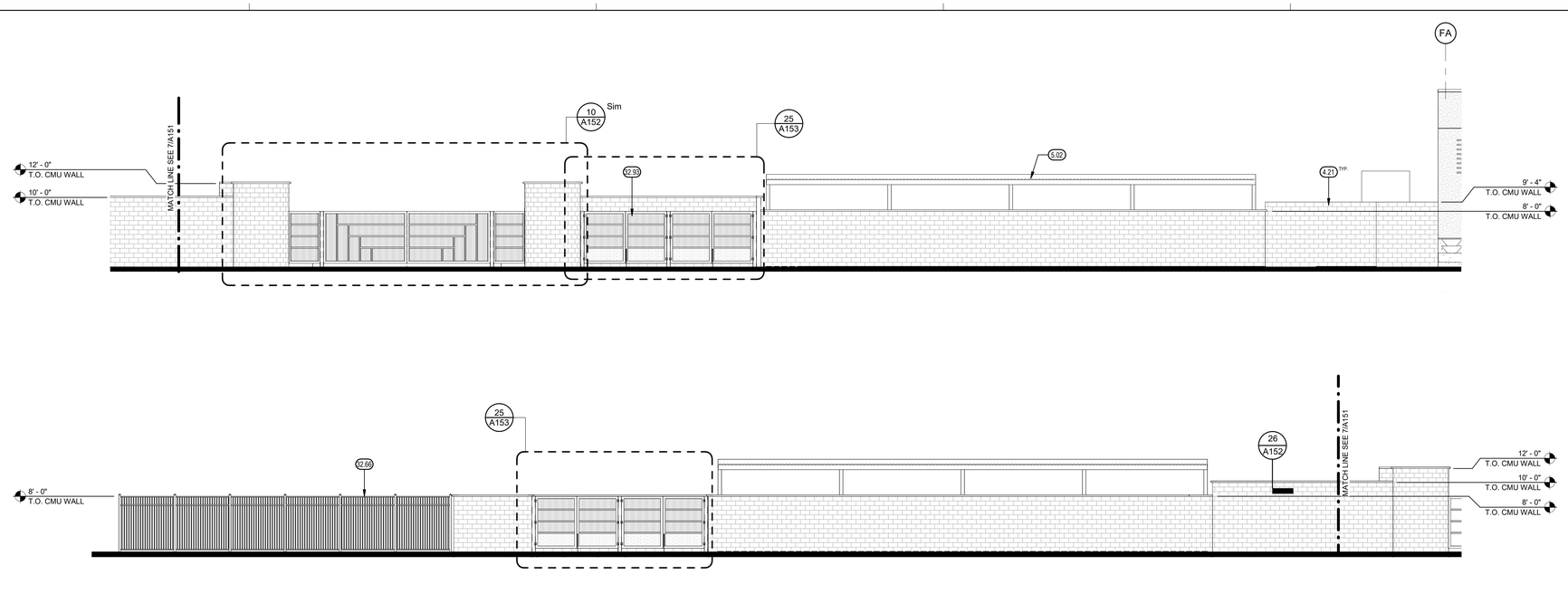

YARD WALL WEST ELEVATION — 1/8" = 1'-0" | 7

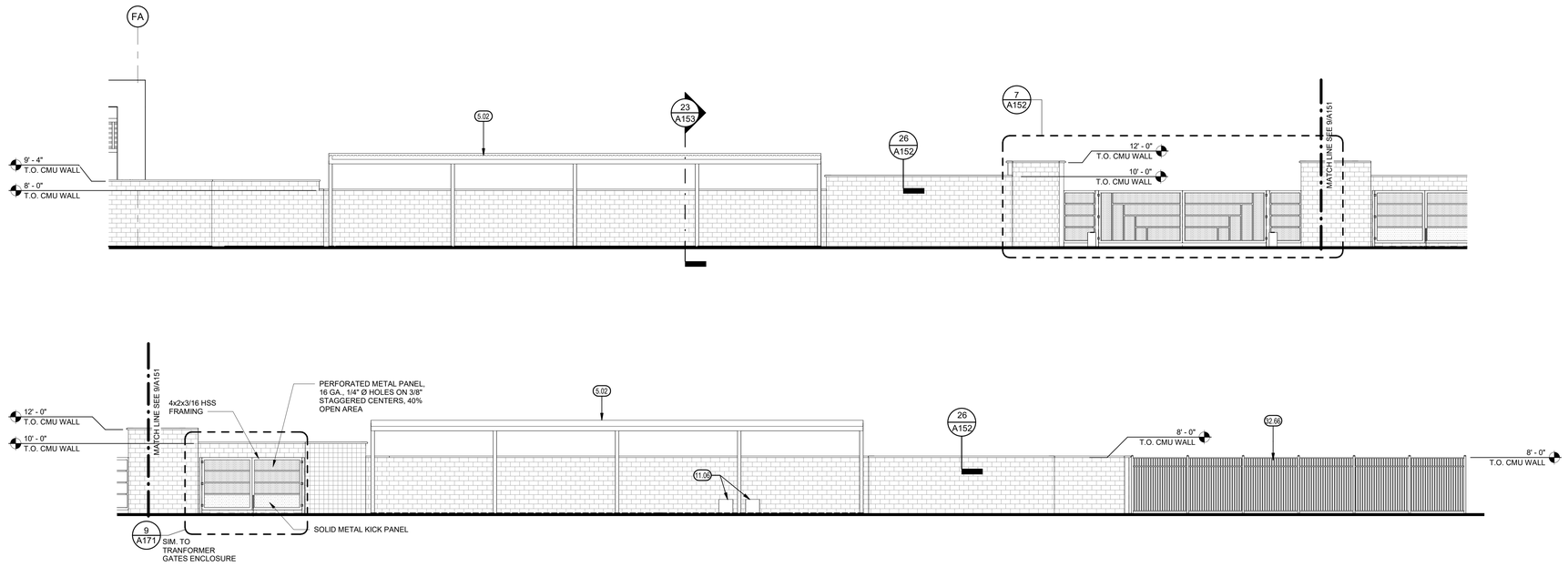

INTERIOR YARD EAST ELEVATION — 1/8" = 1'-0" | 9

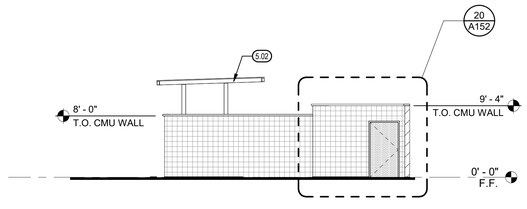

YARD MAN GATE ELEVATION — 1/8" = 1'-0" | 10

KEYNOTES (00.00)

4.21	CMU WALL
5.02	STEEL CANOPY, PAINT
11.06	FUTURE PRESSURE WASHER, FURNISHED AND INSTALLED BY OWNER
32.66	DECORATIVE METAL FENCING, 8'-0" FT HIGH, SEE **5 / A122**
32.93	TRASH ENCLOSURE, TYP.

FOR BID ONLY

Teter, LLP expressly reserves its common law copyright and other property rights in these plans. This document, the ideas and designs incorporated herein, as an instrument of professional service, is not to be used in whole or in part, for any other project without prior written authorization.

MARK	DATE	DESCRIPTION
	11/1/2022	DSA RESUBMITTAL

LICENSED ARCHITECT * VINDON COUNTY * JOHN C. TEETER * No. C 23893 * STATE OF CALIFORNIA

TETER, LLP
FRESNO HEADQUARTERS
VISALIA | BAKERSFIELD | MODESTO | SAN LUIS OBISPO
ARCHITECTS ENGINEERS CONNECTED
TETER

TULARE CAMPUS CTE
COLLEGE OF THE SEQUOIAS
4999 E. BARDSLEY AVE.
TULARE, CA

DRAWING TITLE
SITE DETAILS - ENTRY GATE

PROJECT NO.
21-12032

DRAWING
A151

\\tetr-file1\Users\ryan.odom\Documents\12032-A-COS Tulare CTE_ryan.odomNLB27.rvt
PLOT DATE: 11/1/2022 9:56:48 PM

\\tetr-file1\Users\ryan.odom\Documents\12032-A-COS Tulare CTE_ryan.odomNLB27.rvt

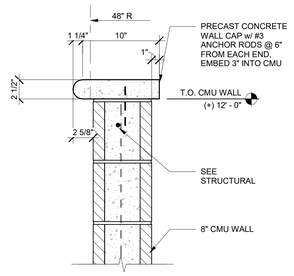

CMU WALL & CAP — 1 1/2" = 1'-0" — 26

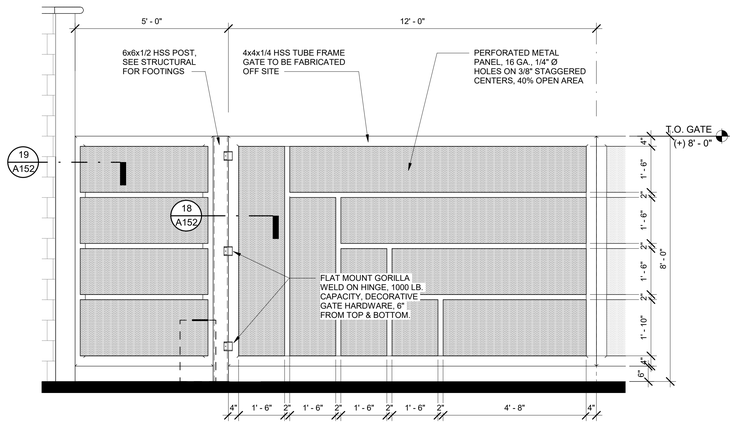

ENTRY GATE DIMENSIONS (EAST) — 1/2" = 1'-0" — 17

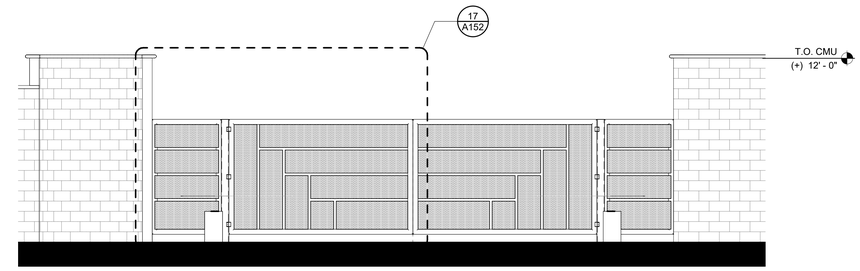

ENLARGED ENTRY GATE ELEVATION - INTERIOR (EAST) — 1/4" = 1'-0" — 7

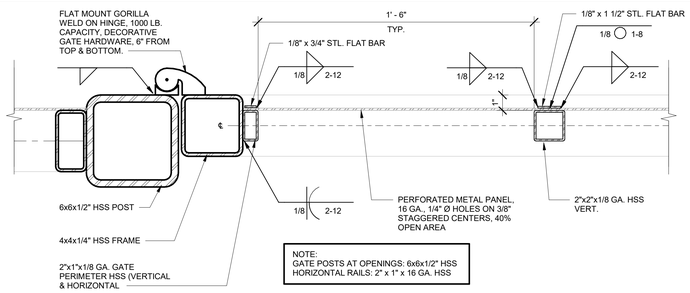

ORNAMENTAL GATE @ SERVICE YARD — 3" = 1'-0" — 18

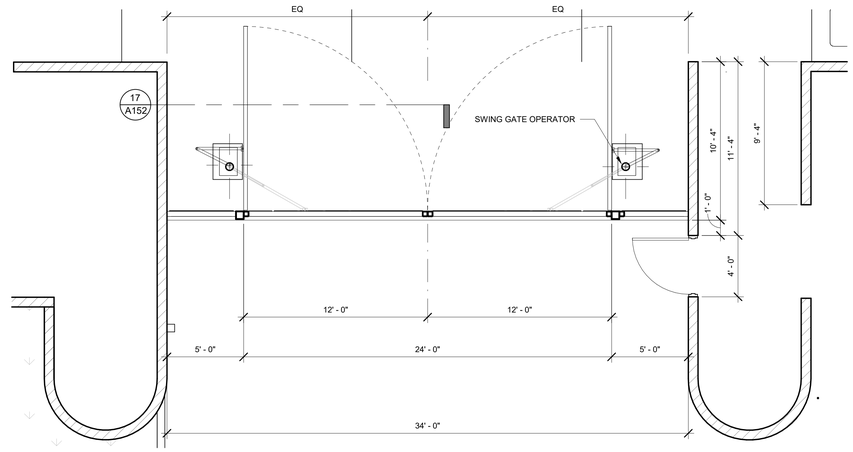

ENLARGED SITE PLAN 'E' — 1/4" = 1'-0" — 8

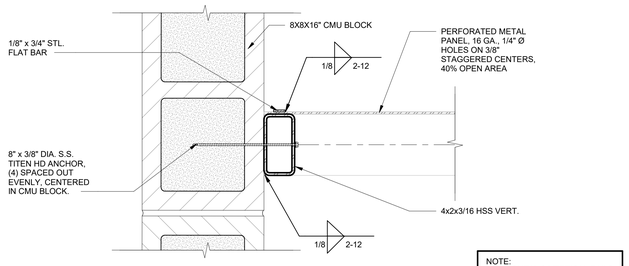

ORNAMENTAL GATE TO CMU WALL — 3" = 1'-0" — 19

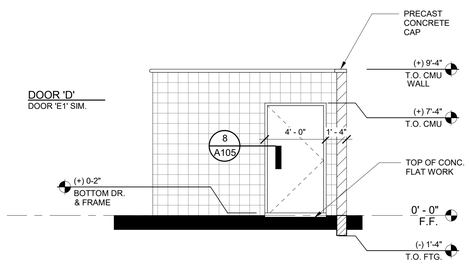

CMU DOOR ELEVATION — 1/4" = 1'-0" — 20

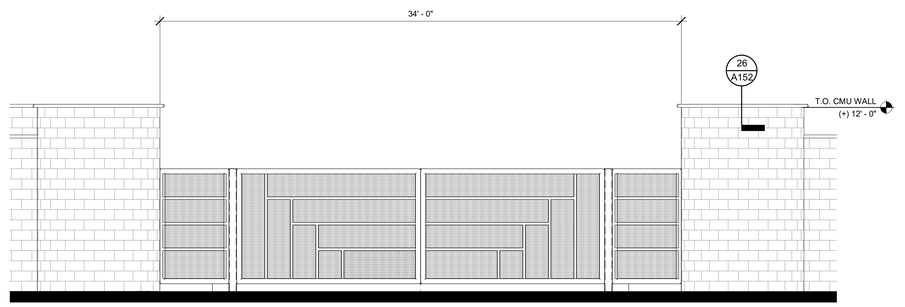

ENLARGED ENTRY GATE ELEVATION - (WEST) — 1/4" = 1'-0" — 10

PLOT DATE: 11/1/2022 9:56:57 PM

FOR BID ONLY

Teter, LLP expressly reserves its common law copyright and other property rights in these plans. This document, the ideas and designs incorporated herein, as an instrument of professional service, is not to be used in whole or part, for any other project without prior written authorization.

MARK	DATE	DESCRIPTION
	11/1/2022	DSA RESUBMITTAL

LICENSED ARCHITECT * VINOD TETER * No. C-23963 * STATE OF CALIFORNIA

TETER, LLP
ARCHITECTS ENGINEERS CONNECTED
FRESNO HEADQUARTERS
VISALIA | BAKERSFIELD | MODESTO | SAN LUIS OBISPO

TULARE CAMPUS CTE
COLLEGE OF THE SEQUOIAS
4999 E. BARDSLEY AVE.
TULARE, CA

DRAWING TITLE
SITE DETAILS - ENTRY GATE

PROJECT NO.
21-12032

DRAWING
A152

\\tetr-file1\Users\ryan.odom\Documents\12032-A-COS Tulare CTE_ryan.odomNLB27.rvt

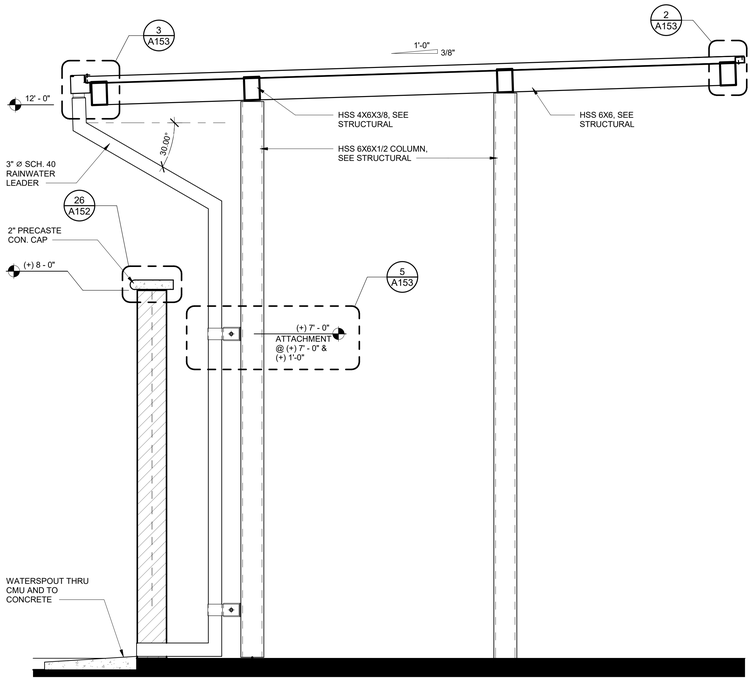

CANOPY SECTION 3/4" = 1'-0" | 23

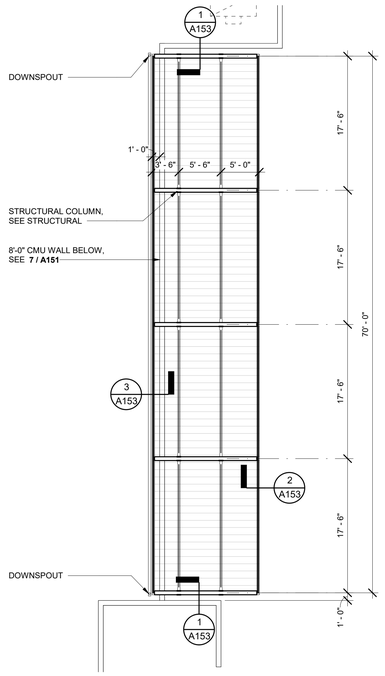

CANOPY ROOF PLAN 1/8" = 1'-0" | 18

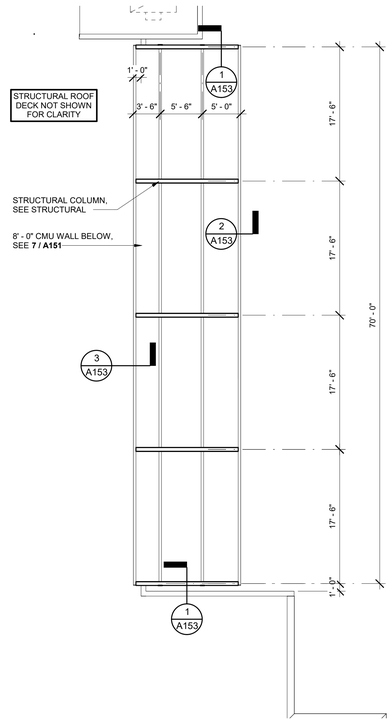

CANOPY ROOF PLAN 1/8" = 1'-0" | 8

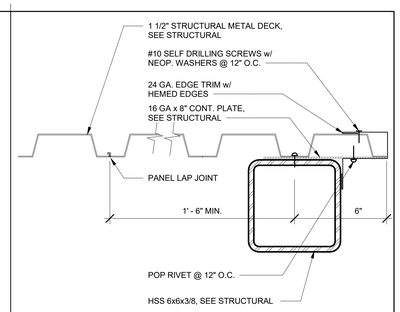

RAKE END 3" = 1'-0" | 1

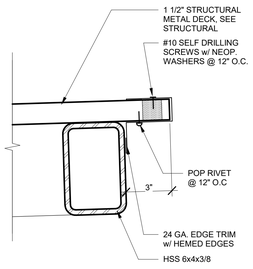

HIGH END 3" = 1'-0" | 2

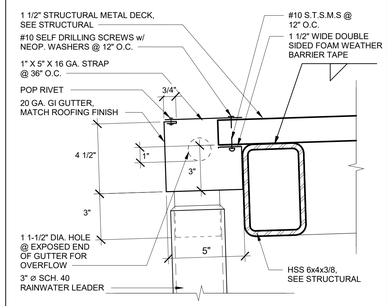

EAVE END / GUTTER 3" = 1'-0" | 3

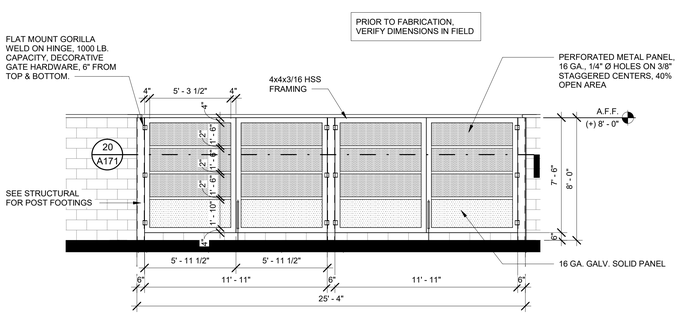

TRASH ENCLOSURE ELEVATION 1/4" = 1'-0" | 25

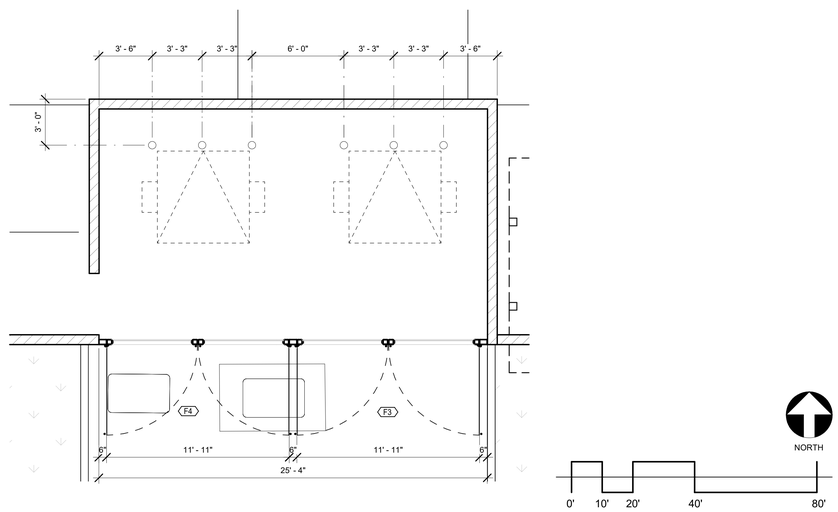

ENLARGED TRASH ENCLOSURE 1/4" = 1'-0" | 10

PLAN VIEW

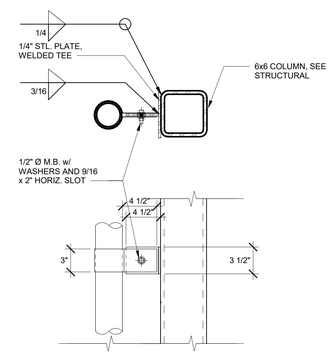

SECTION

CMU RWL ATTACHMENT 1 1/2" = 1'-0" | 5

PLOT DATE: 11/1/2022 9:57:05 PM

FOR BID ONLY

Teter, LLP expressly reserves its common law copyright and other property rights in these plans. This document, the ideas and designs incorporated herein, as an instrument of professional service, is not to be used in whole or part, for any other project without prior written authorization.

MARK	DATE	DESCRIPTION
	11/1/2022	DSA RESUBMITTAL

LICENSED ARCHITECT * VINSON LUKE COUTER * No. C-29823 * STATE OF CALIFORNIA *

TETER, LLP
FRESNO HEADQUARTERS
VISALIA | BAKERSFIELD | MODESTO | SAN LUIS OBISPO
ARCHITECTS ENGINEERS CONNECTED

TETER

TULARE CAMPUS CTE
COLLEGE OF THE SEQUOIAS
4999 E. BARDSLEY AVE.
TULARE, CA

DRAWING TITLE
SITE DETAILS - CANOPY

PROJECT NO.
21-12032

DRAWING
A153

\\tetr-file1\Users\ryan.odom\Documents\12032-A-COS Tulare CTE_ryan.odomNLB27.rvt

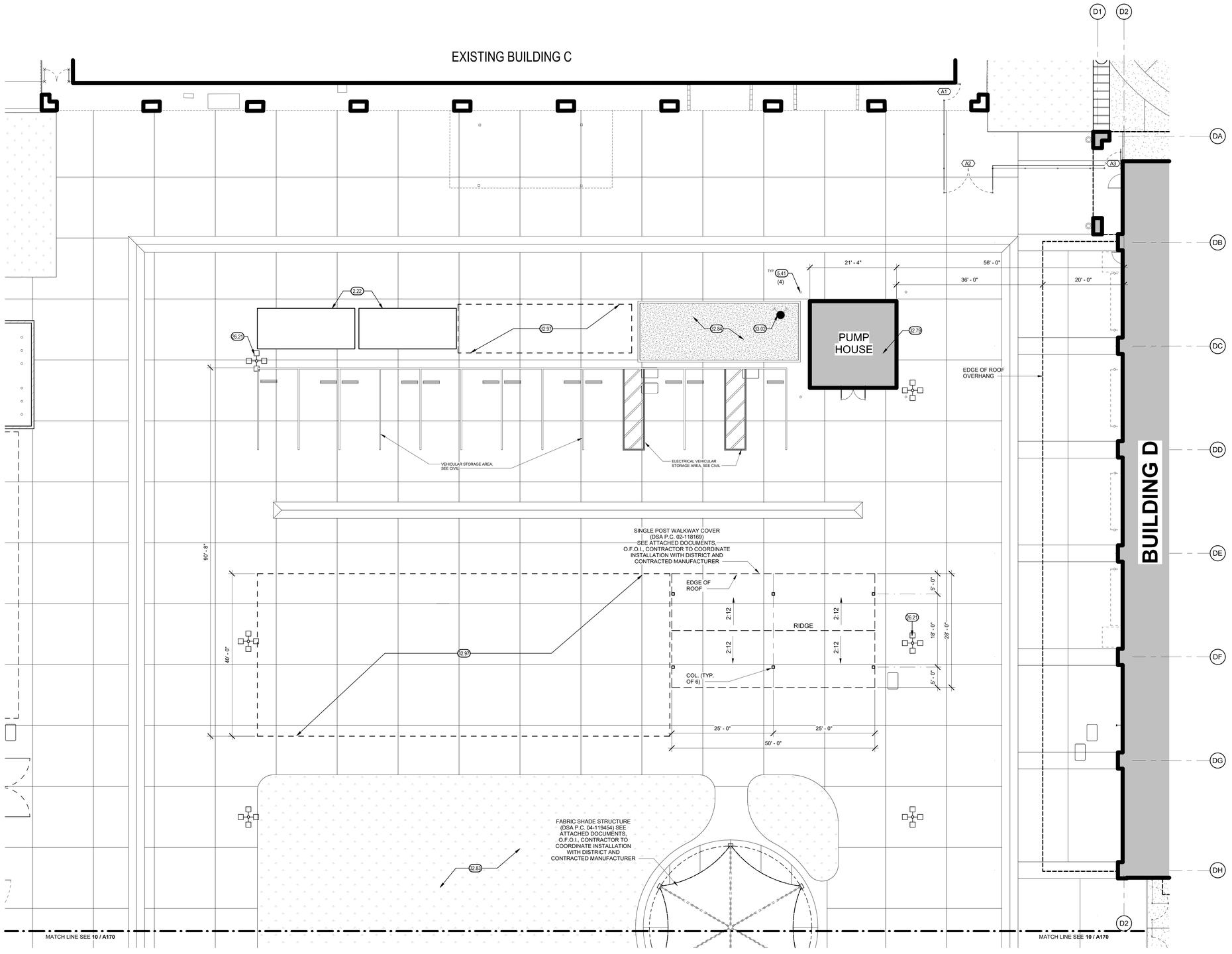

KEYNOTES (00.00)

2.22	NEW LOCATION OF SALVAGED STORAGE SHEDS
5.41	4" STEEL PIPE BOLLARD WITH CONCRETE FILL, SEE **1 / A105**
26.21	POLE MOUNTED LIGHT FIXTURE, SEE ELECTRICAL
32.79	PRECAST CONCRETE STRUCTURE FOR FIRE PUMP, SEE FIRE PUMP HOUSE DOCUMENTS
32.83	TURF, SEE LANDSCAPE
32.84	DESIGNATED DIRT TRAINING AREA, SEE CIVIL
32.97	SPACE DESIGNATED FOR FUTURE STORAGE AREA
33.02	FIRE HYDRANT, SEE CIVIL

LEGEND

- EXISTING CONC. PAVING, SEE CIVIL.
- CONC. PAVING, SEE CIVIL.
- DIRT TRAINING AREA, SEE CIVIL.
- LS — LANDSCAPE AREA, SEE LANDSCAPE.
- LIGHT POLE, SEE ELECTRICAL.
- PATHWAY LIGHT BOLLARD, SEE ELECTRICAL.
- F.H. — FIRE HYDRANT, SEE CIVIL.
- MATCH LINE
- ORNAMENTAL FENCE LINE
- PROPOSED BUILDING

GENERAL NOTES

A. FINISH GRADE SHALL HAVE A 1.5% SLOPE AWAY FROM THE BLDG. FOR A DISTANCE NOT LESS THAN 5'-0" FROM THE BLDG.

B. EXTERIOR CONC. LANDINGS AT DOORS SHALL NOT BE MORE THAN 1/2 INCH LOWER THAN DOORWAY THRESHOLD WITH 1/4 INCH PER FOOT SLOPE MAX.

C. SEE CIVIL FOR A.C. & CONC. PAVING SECTIONS, AND CURB DETAILS.

D. REFER TO CIVIL, LANDSCAPE, PLUMBING & ELECTRICAL FOR UTILITY INFORMATION. CONTRACTOR TO COORDINATE ALL TRADES TO MAINTAIN PROPER CLEARANCES & AVOID CONFLICTS.

KEYPLAN

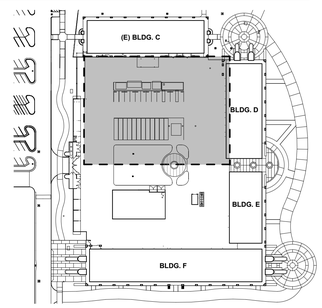

ENLARGED SITE PLAN 'F'

1" = 10'-0" | 10

PLOT DATE: 11/1/2022 9:57:12 PM

FOR BID ONLY

Teter, LLP expressly reserves its common law copyright and other property rights in these plans. This document, the ideas and designs incorporated herein, as an instrument of professional service, is not to be used in whole or part, for any other project without prior written authorization.

MARK	DATE	DESCRIPTION
	11/1/2022	DSA RESUBMITTAL

LICENSED ARCHITECT * VINDON C. COLVER * No. 23693 * STATE OF CALIFORNIA

TETER, LLP
FRESNO HEADQUARTERS
VISALIA | BAKERSFIELD | MODESTO | SAN LUIS OBISPO
ARCHITECTS ENGINEERS CONNECTED

TETER

TULARE CAMPUS CTE
COLLEGE OF THE SEQUOIAS
4999 E. BARDSLEY AVE.
TULARE, CA

DRAWING TITLE
ENLARGED SITE PLAN 'F'

PROJECT NO.
21-12032

DRAWING
A160

\\tetr-file1\Users\ryan.odom\Documents\12032-A-COS Tulare CTE_ryan.odomNLB27.rvt

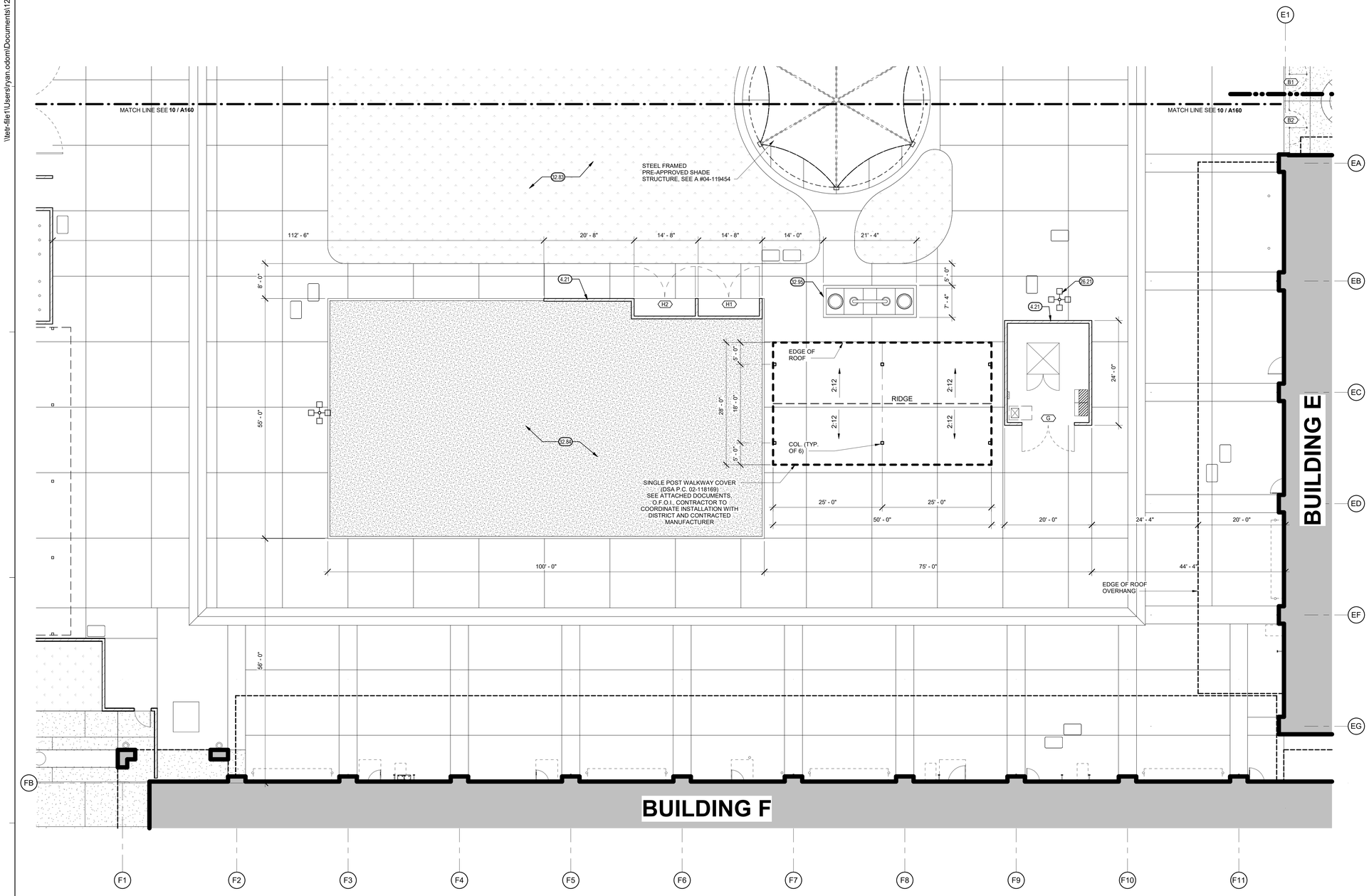

KEYNOTES (XX.XX)

4.21	CMU WALL
26.21	POLE MOUNTED LIGHT FIXTURE, SEE ELECTRICAL
32.83	TURF, SEE LANDSCAPE
32.84	DESIGNATED DIRT TRAINING AREA, SEE CIVIL
32.95	AG MECHANICS IRRIGATION TRAINER, RECESSED INTO GROUND, REFER TO CIVIL AND PLUMBING DOCUMENTS.

LEGEND

- EXISTING CONC. PAVING, SEE CIVIL.
- CONC. PAVING, SEE CIVIL.
- DIRT TRAINING AREA, SEE CIVIL.
- LS — LANDSCAPE AREA, SEE LANDSCAPE.
- LIGHT POLE, SEE ELECTRICAL.
- PATHWAY LIGHT BOLLARD, SEE ELECTRICAL.
- F.H. — FIRE HYDRANT, SEE CIVIL.
- MATCH LINE
- ORNAMENTAL FENCE LINE
- PROPOSED BUILDING

GENERAL NOTES

A. FINISH GRADE SHALL HAVE A 1.5% SLOPE AWAY FROM THE BLDG. FOR A DISTANCE NOT LESS THAN 5'-0" FROM THE BLDG.

B. EXTERIOR CONC. LANDINGS AT DOORS SHALL NOT BE MORE THAN 1/2 INCH LOWER THAN DOORWAY THRESHOLD WITH 1/4 INCH PER FOOT SLOPE MAX.

C. SEE CIVIL FOR A.C. & CONC. PAVING SECTIONS, AND CURB DETAILS.

D. REFER TO CIVIL, LANDSCAPE, PLUMBING & ELECTRICAL FOR UTILITY INFORMATION. CONTRACTOR TO COORDINATE ALL TRADES TO MAINTAIN PROPER CLEARANCES & AVOID CONFLICTS.

KEYPLAN

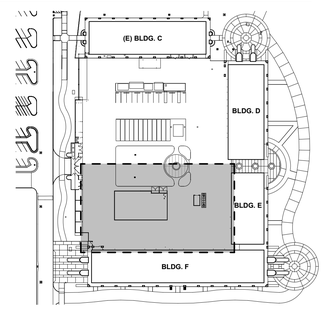

NORTH

0' 10' 20' 40' 80'

1" = 10'-0"

ENLARGED SITE PLAN 'G'

10

PLOT DATE: 11/1/2022 9:57:19 PM

FOR BID ONLY

Teter, LLP expressly reserves its common law copyright and other property rights in these plans. This document, the ideas and designs incorporated herein, as an instrument of professional service, is not to be used in whole or part, for any other project without prior written authorization.

MARK	DATE	DESCRIPTION
	11/1/2022	DSA RESUBMITTAL

LICENSED ARCHITECT * VINDICATION * JOSEPH QUINTER * No. C-29423 * STATE OF CALIFORNIA

TETER, LLP
FRESNO HEADQUARTERS
VISALIA | BAKERSFIELD | MODESTO | SAN LUIS OBISPO
ARCHITECTS ENGINEERS CONNECTED

TETER

TULARE CAMPUS CTE
COLLEGE OF THE SEQUOIAS
4999 E. BARDSLEY AVE.
TULARE, CA

DRAWING TITLE
ENLARGED SITE PLAN 'G'

PROJECT NO.
21-12032

DRAWING
A170

\\tetr-file1\Users\ryan.odom\Documents\12032-A-COS Tulare CTE_ryan.odomNLB27.rvt

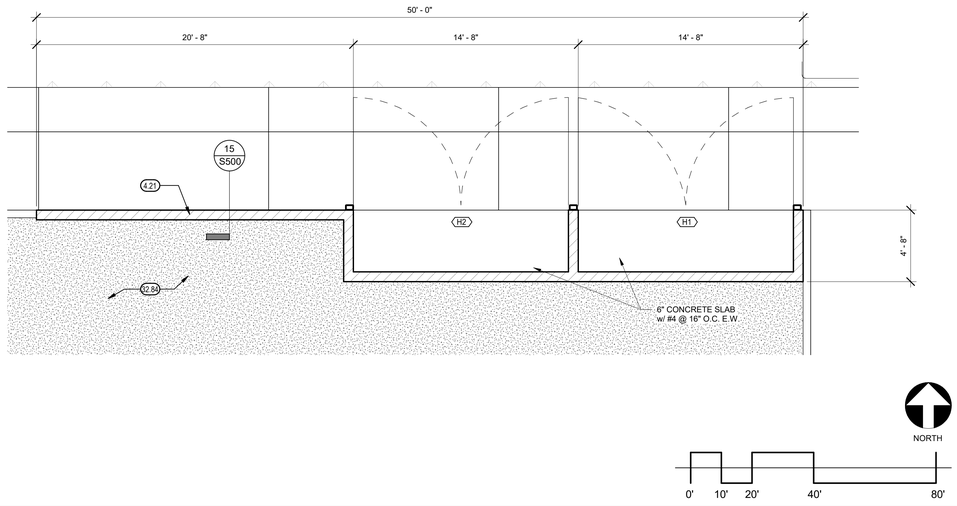

ENLARGED SOLAR PANEL CONTROL ENCLOSURE PLAN 1/4" = 1'-0" | 17

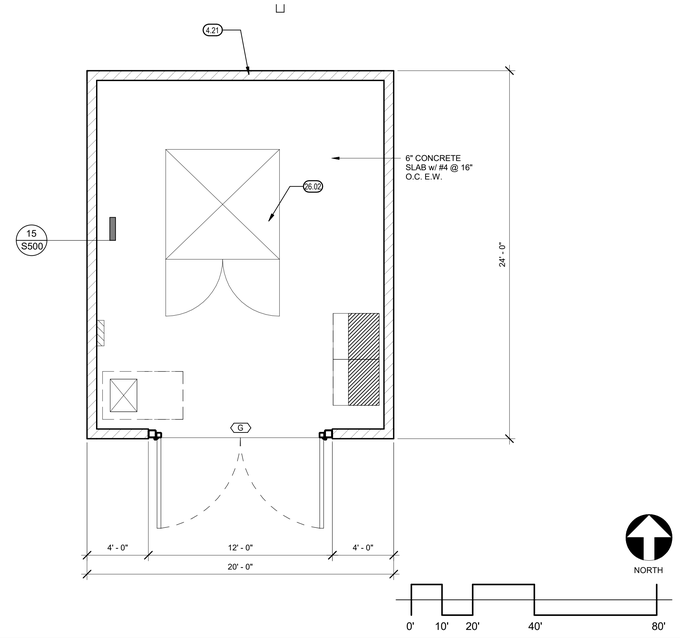

ENLARGED TRANSFORMER ENCLOSURER PLAN 1/4" = 1'-0" | 7

KEYNOTES (00.00)

4.21	CMU WALL
26.02	TRANSFORMER, SEE ELECTRICAL
32.84	DESIGNATED DIRT TRAINING AREA, SEE CIVIL

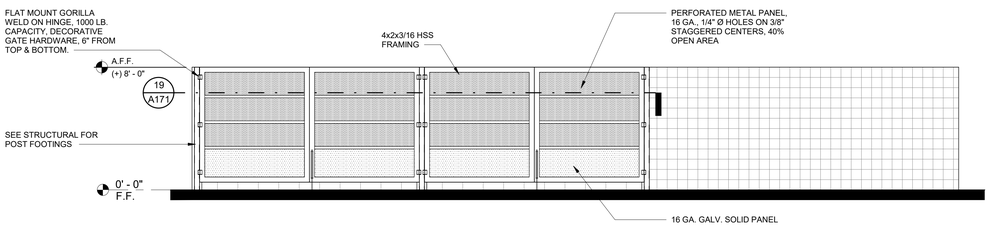

SOLAR PANEL CONTROL ENCLOSURE ELEVATION 1/4" = 1'-0" | 18

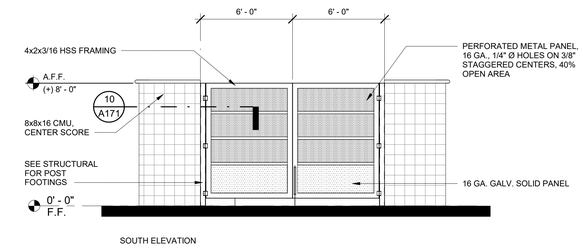

SOUTH ELEVATION

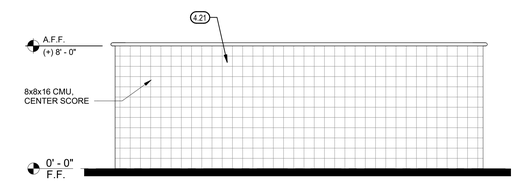

EAST & WEST ELEVATION, NORTH SIMILAR

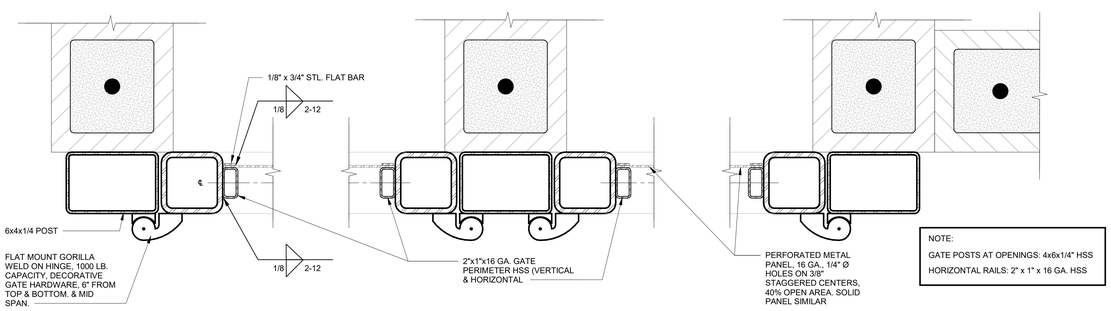

ORNAMENTAL GATE @ SOLAR PANEL CONTROL 3" = 1'-0" | 19

EAST & WEST ELEVATION, NORTH SIMILAR

TRANSFORMER ENCLOSURE ELEVATIONS 1/4" = 1'-0" | 9

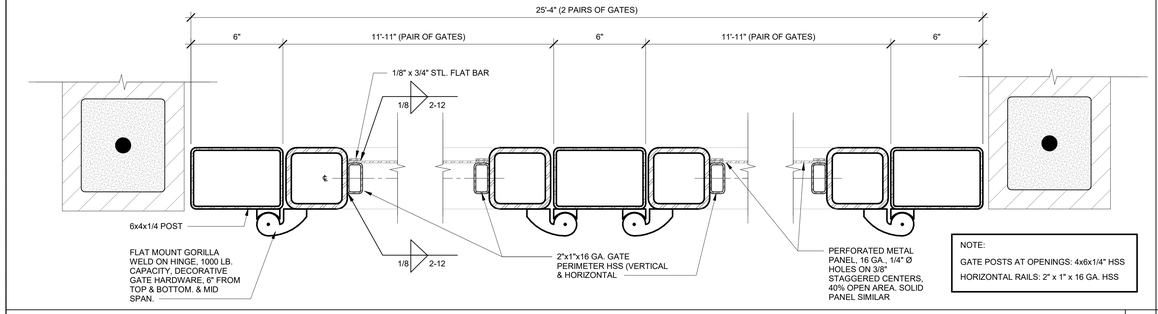

TRASH ENCLOSURE GATE 3" = 1'-0" | 20

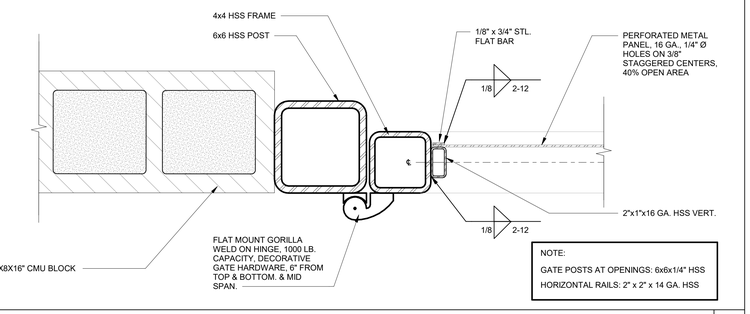

DECORATIVE METAL GATE AT TRANSFORMER ENCLOSURE 3" = 1'-0" | 10

PLOT DATE: 11/1/2022 9:57:29 PM

FOR BID ONLY

Teter, LLP expressly reserves its common law copyright and other property rights in these plans. This document, the ideas and designs incorporated herein, as an instrument of professional service, is not to be used in whole or in part, for any other project without prior written authorization.

MARK	DATE	DESCRIPTION
	11/1/2022	DSA RESUBMITTAL

TETER, LLP
FRESNO HEADQUARTERS
VISALIA | BAKERSFIELD | MODESTO | SAN LUIS OBISPO
ARCHITECTS ENGINEERS CONNECTED

TULARE CAMPUS CTE
COLLEGE OF THE SEQUOIAS
4999 E. BARDSLEY AVE.
TULARE, CA

DRAWING TITLE
SITE DETAILS - ENCLOSURES

PROJECT NO.
21-12032

DRAWING
A171

\\tetr-file1\Users\ryan.odom\Documents\12032-A-COS Tulare CTE_ryan.odomNLB27.rvt

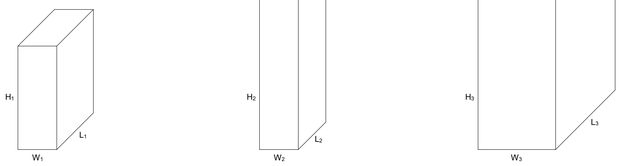

TYPE 1				
H_1 MAX.	W_1 MIN.	L_1 MIN.	MAX. WEIGHT	ANCHORS
4' - 0"	1' - 6"	2' - 0"	1500 LBS	(4) 3/8 KBTZ2, 2" MIN. EMBED

TYPE 2				
H_2 MAX.	W_2 MIN.	L_2 MIN.	MAX. WEIGHT	ANCHORS
7' - 0"	1' - 6"	1' - 6"	600 LBS	(4) 3/8 KBTZ2, 2" MIN. EMBED
7' - 0"	7"	7"	250 LBS	(4) 3/8 KBTZ2, 2" MIN. EMBED

TYPE 3				
H_3 MAX.	W_3 MIN.	L_3 MIN.	MAX. WEIGHT	ANCHORS
6' - 0"	3' - 0"	5' - 0"	2500 LBS	(4) 3/8 KBTZ2, 2" MIN. EMBED

MISCELLANEOUS SHOP EQUIPMENT

1. PROVIDE ANCHOR SHOWN MINIMUM. WHERE ANCHOR HOLE PROVIDED BY MANUFACTURER IS LARGER PROVIDE CORRESPONDING LARGER ANCHOR TO FIT HOLE SIZE AS FOLLOWS:
   - 1/2"ø KBTZ2, 2" MIN. EMBED
   - 5/8"ø KBTZ2, 2 3/4" MIN. EMBED
   - 3/4"ø KBTZ2, 3 1/4" MIN. EMBED
2. FOR UNITS TALLER AND/OR HEAVIER THAN THESE PARAMETERS, CONTACT STRUCTURAL ENGINEER OF RECORD.
3. FOR UNITS NARROWER THAN THESE PARAMETERS, CONTACT STRUCTURAL ENGINEER OF RECORD.
4. WHERE MANUFACTURER HAS NO ANCHOR POINT, CONTACT STRUCTURAL ENGINEER OF RECORD.

MISC. SHOP EQUIPMENT ANCHORAGE

N.T.S. | 22

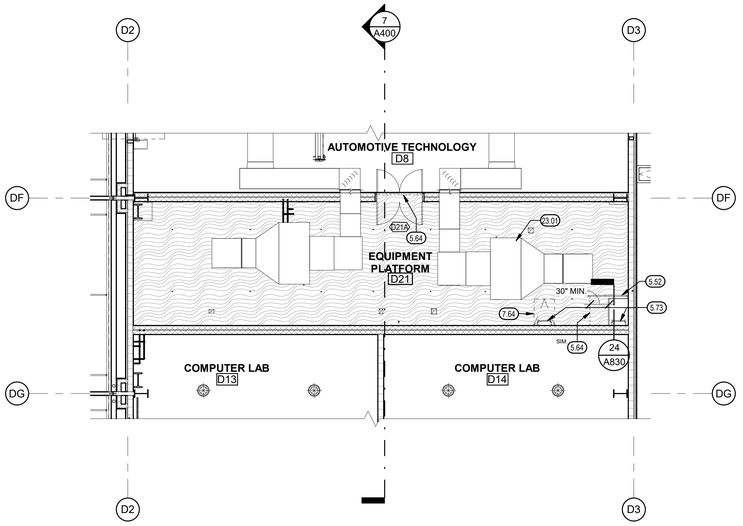

BUILDING D - EQUIPMENT PLATFORM PLAN (FOR D8)

1/8" = 1'-0" | 25

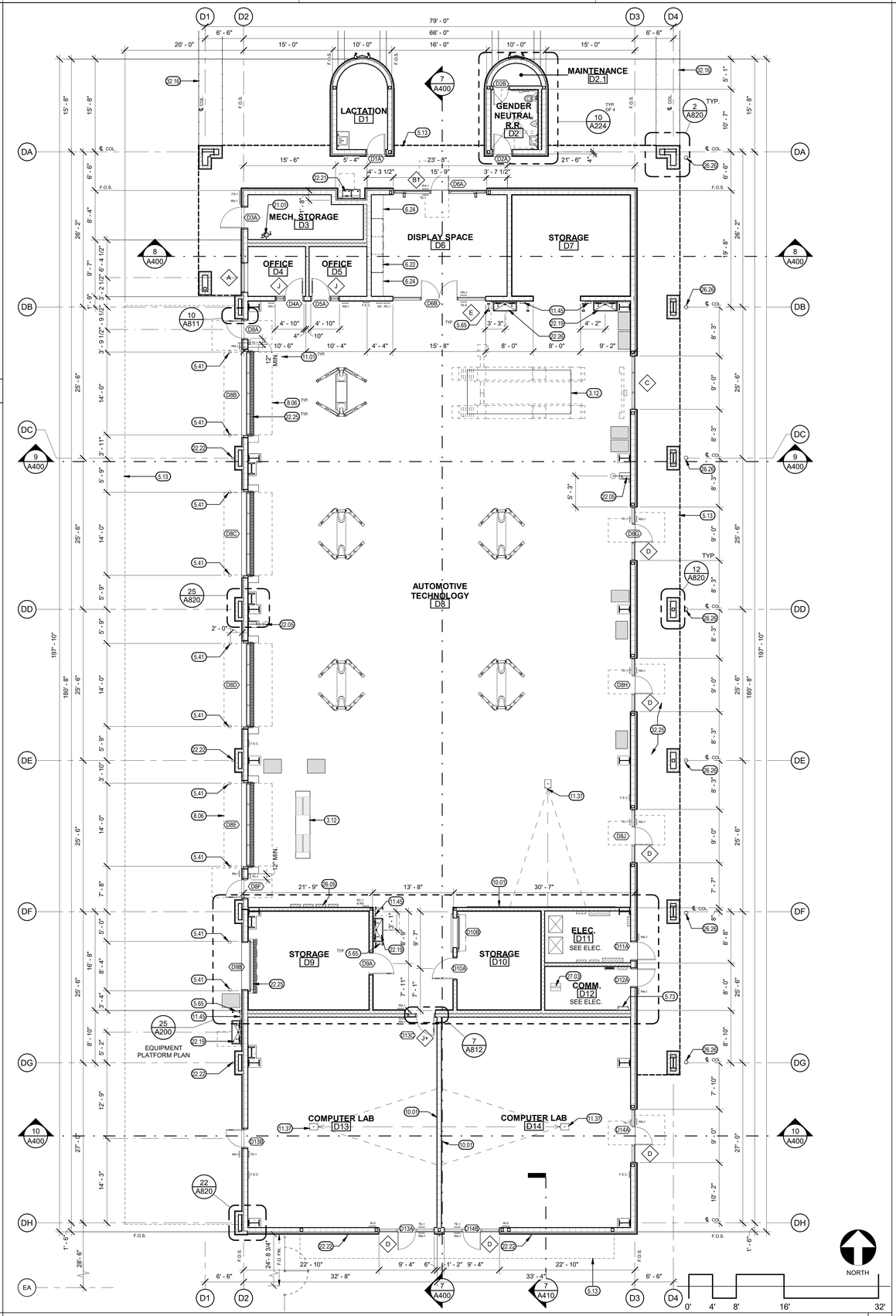

FLOOR PLAN - BUILDING D

1/8" = 1'-0" | 10

KEYNOTES

3.12	EQUIPMENT PIT, SEE STRUCTURAL
5.13	WALKWAY/CANOPY OVERHANG, TYP.
5.41	4" STEEL PIPE BOLLARD WITH CONCRETE FILL, SEE **1 / A105**
5.52	GALVANIZED PIPE GUARD FOR FALL PROTECTION, SEE 29/A830
5.64	STEEL SAFETY CHAIN, SEE **7 / A813** , TYP. (SIM. AT PLATFORM ACCESS)
5.65	PIPE GUARD AT DRINKING FOUNTAINS & WASH SINKS, SEE DETAIL **9 / A801**
5.73	VERTICAL MAINTENANCE ACCESS LADDER, SEE **24 / A830** FOR PLATFORM ACCESS
6.22	PLASTIC LAMINATE BASE CABINET, SEE INTERIOR ELEVATIONS AND 7/A850 FOR ANCHORAGE
6.24	PLASTIC LAMINATE TALL STORAGE CABINET, SEE INTERIOR ELEVATIONS
7.64	ROOF ACCESS HATCH ABOVE, SEE **22 / A830** & **28 / A830** ; SEE **23 / A830** FOR LADDER TO ROOF
8.06	DASHED LINE INDICATES BI-FOLD DOOR IN OPEN POSITION
10.01	HIGH PRESSURE LAMINATE MAGNETIC MARKER BOARDS
11.01	VEHICLE LIFT
11.37	OVERHEAD PROJECTOR, SEE ELECTRICAL & STRUCTURAL FOR MOUNT
11.45	PAPER TOWEL, AND SOAP DISPENSER, SEE INTERIOR ELEVATIONS, TYP.
21.01	FIRE SPRINKLER RISER, SEE FIRE PROTECTION
22.05	EMERGENCY EYE WASH/SHOWER, SEE PLUMBING
22.19	HANDWASH SINK, SEE PLUMBING AND INTERIOR ELEVATIONS, TYP.
22.21	HIGH-LOW DRINKING FOUNTAIN w/BOTTLE FILLER, SEE PLUMBING AND DETAIL **14 / A801**
22.22	PIPE DRAIN FROM GUTTER, TYP. SEE PLUMBING AND EXTERIOR ELEVATIONS
22.25	TRENCH DRAIN, SEE PLUMBING
22.26	ACCESSIBLE HANDWASH SINK, SEE PLUMBING, FOR ACCESSIBLE REQUIREMENTS SEE 9/A801
23.01	HVAC EQUIPMENT, SEE MECH
26.05	ELECTRICAL PANEL, SEE ELECTRICAL
26.26	GROUND MOUNTED UP-LIGHTS, SEE ELECTRICAL
27.03	POST RACK, SEE ELECTRICAL
32.16	CAST-IN-PLACE CONCRETE BENCH, SEE **5 / A105**
32.25	CONCRETE WALK AT 1.9% MAX. SLOPE, TYP. SEE ENLARGED SITE PLANS

WALL LEGEND

SYM.	DESCRIPTION
	4" METAL STUDS, 16" O.C.
	6" METAL STUDS, 16" O.C.
	DBL. 6" METAL STUDS, 16" O.C.
	8" METAL STUDS, 16" O.C.
	DBL. 8" METAL STUDS, 16" O.C.

LEGEND

- MINIMUM 30"X48" WHEELCHAIR CLEAR SPACE
- MINIMUM 60" DIAMETER WHEELCHAIR TURN AROUND SPACE
- TBD-U — WALL SIGNAGE, SEE **3 / A800** , **5 / A800**, & **18 / A800**
- 201A — DOOR REFERENCE SEE DOOR SCHEDULE ON SHEET A700
- XX — WINDOW REFERENCE SEE WINDOW SCHEDULE ON SHEET A701
- F.E.C. — FIRE EXTINGUISHER (2A;10B;C F.E.) & CABINET, SEE **4 / A850**
- FRT PLYWOOD PLATFORM (PAINT/STAIN)
- MISCELLANEOUS SHOP EQUIPMENT (OFCI), WHERE ANCHORAGE IS REQUIRED SEE **22 / A200**

GENERAL NOTES

A. FOR TYP. ACCESSIBLE TOILET ROOM FIXTURE AND ACCESSORY CLEARANCES AND FIXTURE MOUNTING HEIGHTS, SEE **2 / A801**

B. FOR TYPICAL CASEWORK ANCHORAGE , SEE **7 / A850**

C. PROVIDE FIRE EXTINGUISHER: CLASS 2A: 10B:C MIN. PER NFPA 10, ONE FOR EVERY 3,000 S.F. OR PORTION THEREOF & TRAVEL DISTANCE NOT TO EXCEED 75'-0".

D. ALL DIMENSIONS TO FACE OF STUD, U.N.O.

E. TYP. INTERIOR WALL FINISH FOR STUD WALLS: 5/8" TYPE 'X' GYP. BD., WATER RESISTANT TYPE IN RESTROOMS UNLESS INDICATED FOR TILE FINISH APPLICATION SHALL COMPLY w/ CBC SECTION 2508. GYP. BD. SHALL BE FASTENED TO SUPPORTS w/ SCREWS.

F. ACOUSTICAL INSULATION: ALL INTERIOR STUD WALLS SHALL BE INSULATED w/ ACOUSTICAL INSULATION:

   a. FOR ACOUSTICAL WALL DETAILS, SEE INSULATED WALL TYPES ON SHEET A827

   b. ALL WALLS & CEILING OF: PRIVATE OFFICES, ELECTRICAL/ MECH. ROOMS (INCLUDING EQUIPMENT PLATFORMS), TOILET ROOMS, SHOPS, STORAGE AREAS, CLASSROOMS ROBOTICS AND MEETING ROOMS

G. DIMENSIONS WITH "MIN.","CLR.", OR "ABSOLUTE" IS MEASURED FROM FACE OF WALL FINISH.

H. FOR ACCESSIBLE DOOR MANUEVERING CLEARANCES, SEE **9 / A800**

I. CONTRACTOR SHALL PATCH, REPAIR OR REPLACE ANY ADJACENT WORK (WALL, CEILING, FLOOR SURFACES, ETC.) THAT IS DAMAGED, REMOVED AND/OR DEMOLISHED DURING THE COURSE OF CONSTRUCTION. SEE SPECIFICATION REQUIREMENTS FOR CUTTING & PATCHING.

J. ALL FLOOR SUBSTRATES ARE TO BE CLEANED, PATCHED, REPAIRED, LEVELED, AND PREPARED AS REQUIRED BY FLOORING FINISH MANUFACTURER RECOMMENDATIONS FOR FLOORING FINISH SYSTEM SCHEDULED.

K. ALL MANUFACTURER REQUIRED TESTING, CORRECTIVE MEASURES, AND PREPARATIONS WITH REGARD TO EXISTING OR COMPLETED CONCRETE SLAB, INCLUDING PATCHED AREAS, SHALL BE INCLUDED AND PERFORMED.

L. SEE SHEET A201 FOR ADDITIONAL UTILITIES AND EQUIPMENT MOUNTED IN FLOOR.

KEYPLAN

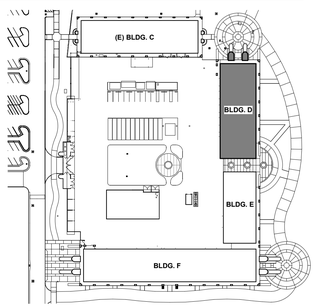

PLOT DATE: 11/1/2022 9:57:46 PM

FOR BID ONLY

Teter, LLP expressly reserves its common law copyright and other property rights in these plans. This document, the ideas and designs incorporated herein, as an instrument of professional service, is not to be used in whole or part, for any other project without prior written authorization.

MARK	DATE	DESCRIPTION
	11/1/2022	DSA RESUBMITTAL

TETER, LLP
FRESNO HEADQUARTERS
VISALIA | BAKERSFIELD | MODESTO | SAN LUIS OBISPO
ARCHITECTS ENGINEERS CONNECTED

TULARE CAMPUS CTE
COLLEGE OF THE SEQUOIAS
4999 E. BARDSLEY AVE.
TULARE, CA

DRAWING TITLE
FLOOR PLAN - BUILDING D

PROJECT NO.
21-12032

DRAWING
A200

\\tetr-file1\Users\ryan.odom\Documents\12032-A-COS Tulare CTE_ryan.odomNLB27.rvt

WALL TYPE PLAN - BUILDING D EQUIPMENT PLATFORM (FOR D8) 1/8" = 1'-0" | 25

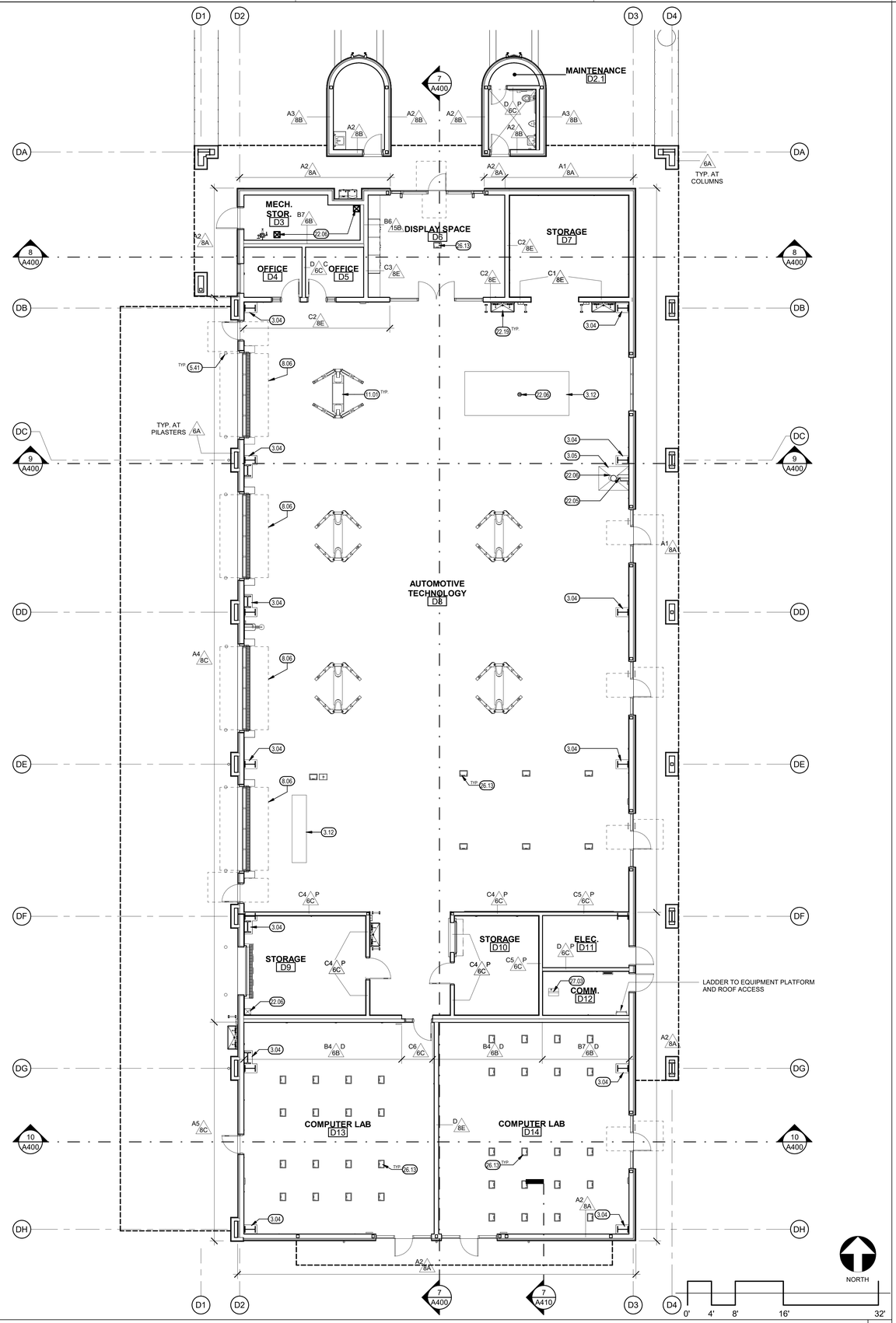

WALL AND CURB TYPE PLAN - BUILDING D 1/8" = 1'-0" | 10

KEYNOTES (00.00)

3.04	8" HIGH CONCRETE CURB, TYP.
3.05	SLOPE CONCRETE SLAB TO FLOOR DRAIN, 1.5% MAXIMUM SLOPE
3.12	EQUIPMENT PIT, SEE STRUCTURAL
5.41	4" STEEL PIPE BOLLARD WITH CONCRETE FILL. SEE **1 / A105**
8.06	DASHED LINE INDICATES BI-FOLD DOOR IN OPEN POSITION
11.01	VEHICLE LIFT
22.05	EMERGENCY EYE WASH/SHOWER, SEE PLUMBING
22.06	FLOOR DRAIN/FLOOR SINK, SEE PLUMBING
22.19	HANDWASH SINK, SEE PLUMBING AND INTERIOR ELEVATIONS, TYP.
26.13	POWER/DATA FLOOR BOX, SEE ELECTRICAL
27.03	POST RACK, SEE ELECTRICAL

LEGEND

WALL CURB TYPE, SEE SHEET A822

CURB WIDTH:

A1 - 15"	B1 - 20 1/4"	C1 - 11 1/4"	D - NO CURB		
A2 - 13 3/8"	B2 - 16 1/4"	C2 - 9 5/8"			
A3 - 20 3/8"	B3 - 18 5/8"	C3 - 8"			
A4 - 13 7/8"	B4 - 14 5/8"	C4 - 9 1/4"			
A5 - 12 1/4"	B5 - 17"	C5 - 7 5/8"			
	B6 - 15"	C6 - 6"			
	B7 - 13"				

WALL HEIGHT DESIGNATION

A1 / 6A / P

(BLANK)	WALL FRAMING CONTINUOUS TO UNDERSIDE OF ROOF DECK OR FRAMING, OR TO TOP OF PARAPET UNLESS NOTED OTHERWISE
P	PARTIAL HEIGHT WALL (WALL FRAMING CONTINUOUS TO UNDERSIDE OF CEILING/ EQUIPMENT PLATFORM FRAMING)
FS (X'-X")	FREE STANDING WALL (HEIGHT A.F.F. AS INDICATED) SEE STRUCTURAL FOR CANTILEVERED WALL SUPPORTS
D	DOUBLE WALL AT EQUIPMENT PLATFORM; ONE WALL FRAMING CONTINUOUS TO UNDERSIDE OF ROOF DECK OR FRAMING. OTHER WALL PARTIAL HEIGHT (FRAMING CONTINUOUS TO UNDERSIDE OF EQUIPMENT PLATFORM FRAMING.) FOR MORE INFORMATION SEE SECTIONS, STRUCTURAL AND DETAILS 4/S600 AND 9/S600

WALL TYPE REFERENCE, SEE SHEET A822

DOTTED LINE ADJACENT TO WALL INDICATES 1-HR FIRE BARRIER. FOR FIRE RATED WALL ASSEMBLY AND PENETRATION DETAILS SEE SHEET A806

KEYPLAN

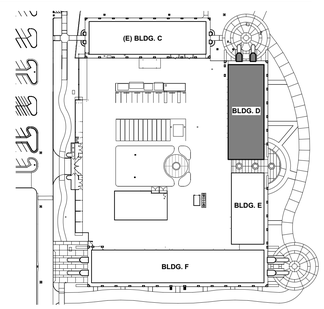

FOR BID ONLY

Teter, LLP expressly reserves its common law copyright and other property rights in these plans. This document, the ideas and designs incorporated herein, as an instrument of professional service, is not to be used in whole or in part, for any other project without prior written authorization.

MARK	DATE	DESCRIPTION
	11/1/2022	DSA RESUBMITTAL

LICENSED ARCHITECT * VINOD KUMAR * No. C 23843 * EXP. 8/31/23 * STATE OF CALIFORNIA

TETER, LLP
FRESNO HEADQUARTERS
VISALIA | BAKERSFIELD | MODESTO | SAN LUIS OBISPO
ARCHITECTS ENGINEERS CONNECTED
TETER

TULARE CAMPUS CTE
COLLEGE OF THE SEQUOIAS
4999 E. BARDSLEY AVE.
TULARE, CA

DRAWING TITLE
WALL / CURB TYPE PLAN, ITEMS IN SLAB - BUILDING D

PROJECT NO.
21-12032

DRAWING
A201

PLOT DATE: 11/1/2022 9:58:01 PM

\\tetr-file1\Users\ryan.odom\Documents\12032-A-COS Tulare CTE_ryan.odomNLB27.rvt

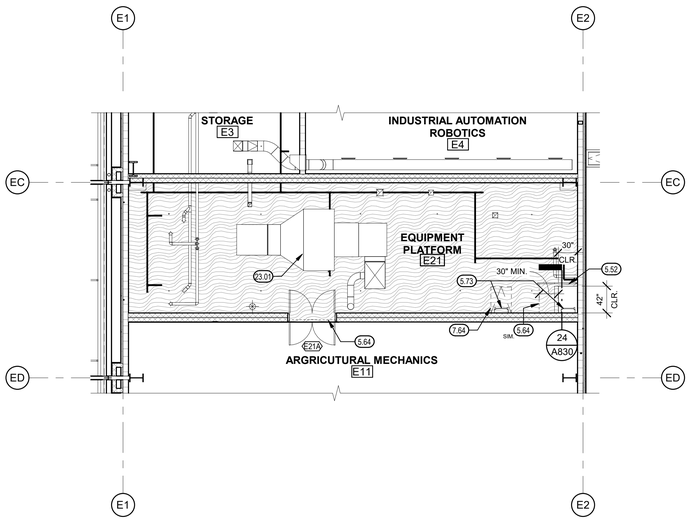

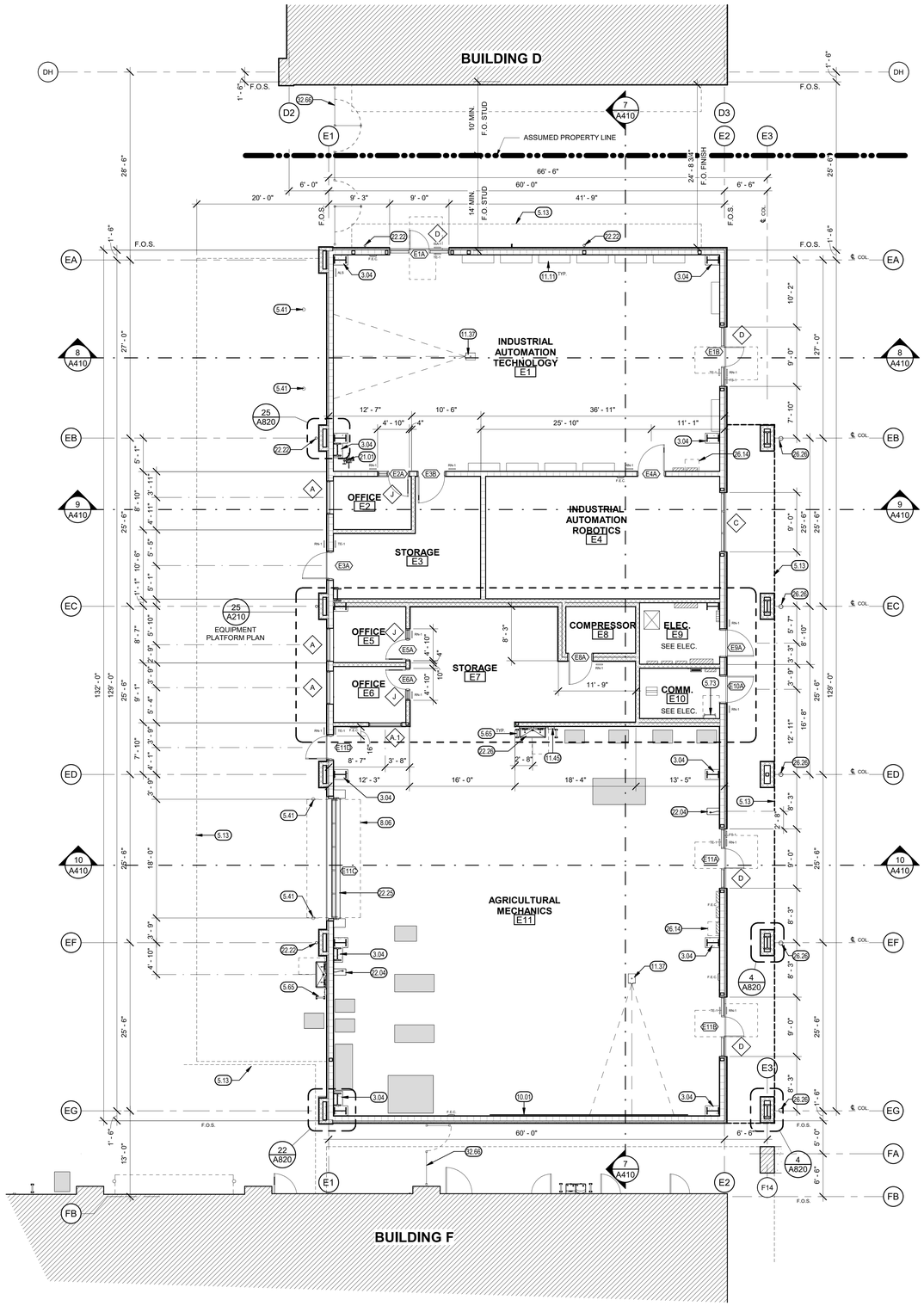

KEYNOTES

3.04	8" HIGH CONCRETE CURB, TYP.
5.13	WALKWAY/CANOPY OVERHANG, TYP.
5.41	4" STEEL PIPE BOLLARD WITH CONCRETE FILL, SEE **1 / A105**
5.52	GALVANIZED PIPE GUARD FOR FALL PROTECTION, SEE 29/A830
5.64	STEEL SAFETY CHAIN, SEE **7 / A813** , TYP. (SIM. AT PLATFORM ACCESS)
5.65	PIPE GUARD AT DRINKING FOUNTAINS & WASH SINKS, SEE DETAIL **9 / A801**
5.73	VERTICAL MAINTENANCE ACCESS LADDER, SEE **24 / A830** FOR PLATFORM ACCESS
7.64	ROOF ACCESS HATCH ABOVE, SEE **22 / A830** & **28 / A830** ; SEE **23 / A830** FOR LADDER TO ROOF
8.06	DASHED LINE INDICATES BI-FOLD DOOR IN OPEN POSITION
10.01	HIGH PRESSURE LAMINATE MAGNETIC MARKER BOARDS
11.11	INDUSTRIAL AUTOMATION TRAINER, TYP.
11.37	OVERHEAD PROJECTOR, SEE ELECTRICAL & STRUCTURAL FOR MOUNT
11.45	PAPER TOWEL, AND SOAP DISPENSER, SEE INTERIOR ELEVATIONS, TYP.
21.01	FIRE SPRINKLER RISER, SEE FIRE PROTECTION
22.04	EMERGENCY EYE WASH, SEE PLUMBING
22.22	PIPE DRAIN FROM GUTTER, TYP. SEE PLUMBING AND EXTERIOR ELEVATIONS
22.25	TRENCH DRAIN, SEE PLUMBING
22.26	ACCESSIBLE HANDWASH SINK, SEE PLUMBING, FOR ACCESSIBLE REQUIREMENTS SEE 9/A801
23.01	HVAC EQUIPMENT, SEE MECH
26.14	WALL MOUNTED ELECTRICAL TRANSFORMER, SEE ELECTRICAL
26.26	GROUND MOUNTED UP-LIGHTS, SEE ELECTRICAL
32.66	DECORATIVE METAL FENCING, 8'-0" FT HIGH, SEE **5 / A122**

WALL LEGEND

SYM.	DESCRIPTION
	4" METAL STUDS, 16" O.C.
	6" METAL STUDS, 16" O.C.
	DBL. 6" METAL STUDS, 16" O.C.
	8" METAL STUDS, 16" O.C.
	DBL. 8" METAL STUDS, 16" O.C.

LEGEND

- MINIMUM 30"X48" WHEELCHAIR CLEAR SPACE
- MINIMUM 60" DIAMETER WHEELCHAIR TURN AROUND SPACE
- WALL SIGNAGE, SEE **3 / A800** , **5 / A800**, & **18 / A800**
- 201A — DOOR REFERENCE SEE DOOR SCHEDULE ON SHEET A700
- XX — WINDOW REFERENCE SEE WINDOW SCHEDULE ON SHEET A701
- F.E.C. — FIRE EXTINGUISHER (2A;10B;C F.E.) & CABINET, SEE **4 / A850**
- FRT PLYWOOD PLATFORM (PAINT/STAIN)
- MISCELLANEOUS SHOP EQUIPMENT (OFCI), WHERE ANCHORAGE IS REQUIRED SEE **22 / A200**

GENERAL NOTES

A. FOR TYP. ACCESSIBLE TOILET ROOM FIXTURE AND ACCESSORY CLEARANCES AND FIXTURE MOUNTING HEIGHTS, SEE **2 / A801**

B. FOR TYPICAL CASEWORK ANCHORAGE , SEE **7 / A850**

C. PROVIDE FIRE EXTINGUISHER: CLASS 2A: 10B:C MIN. PER NFPA 10, ONE FOR EVERY 3,000 S.F. OR PORTION THEREOF & TRAVEL DISTANCE NOT TO EXCEED 75'-0".

D. ALL DIMENSIONS TO FACE OF STUD, U.N.O.

E. TYP. INTERIOR WALL FINISH FOR STUD WALLS: 5/8" TYPE 'X' GYP. BD., WATER RESISTANT TYPE IN RESTROOMS UNLESS INDICATED FOR TILE FINISH. APPLICATION SHALL COMPLY w/ CBC SECTION 2508. GYP. BD. SHALL BE FASTENED TO SUPPORTS w/ SCREWS.

F. ACOUSTICAL INSULATION: ALL INTERIOR STUD WALLS SHALL BE INSULATED w/ ACOUSTICAL INSULATION:

   a. FOR ACOUSTICAL WALL DETAILS, SEE INSULATED WALL TYPES ON SHEET A827

   b. ALL WALLS & CEILING OF: PRIVATE OFFICES, ELECTRICAL/ MECH. ROOMS (INCLUDING EQUIPMENT PLATFORMS), TOILET ROOMS, SHOPS, STORAGE AREAS, CLASSROOMS ROBOTICS AND MEETING ROOMS

G. DIMENSIONS WITH "MIN.","CLR.", OR "ABSOLUTE" IS MEASURED FROM FACE OF WALL FINISH.

H. FOR ACCESSIBLE DOOR MANUEVERING CLEARANCES, SEE **9 / A800**

I. CONTRACTOR SHALL PATCH, REPAIR OR REPLACE ANY ADJACENT WORK (WALL, CEILING, FLOOR SURFACES, ETC.) THAT IS DAMAGED, REMOVED AND/OR DEMOLISHED DURING THE COURSE OF CONSTRUCTION. SEE SPECIFICATION REQUIREMENTS FOR CUTTING & PATCHING.

J. ALL FLOOR SUBSTRATES ARE TO BE CLEANED, PATCHED, REPAIRED, LEVELED, AND PREPARED AS REQUIRED BY FLOORING FINISH MANUFACTURER RECOMMENDATIONS FOR FLOORING FINISH SYSTEM SCHEDULED.

K. ALL MANUFACTURER REQUIRED TESTING, CORRECTIVE MEASURES, AND PREPARATIONS WITH REGARD TO EXISTING OR COMPLETED CONCRETE SLAB, INCLUDING PATCHED AREAS, SHALL BE INCLUDED AND PERFORMED.

L. SEE SHEET A201 FOR ADDITIONAL UTILITIES AND EQUIPMENT MOUNTED IN FLOOR.

KEYPLAN

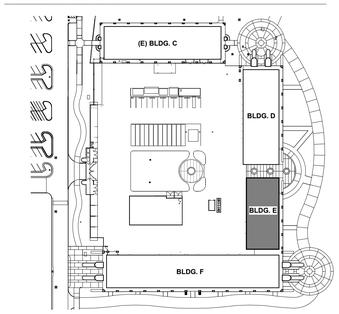

FOR BID ONLY

Teter, LLP expressly reserves its common law copyright and other property rights in these plans. This document, the ideas and designs, as an instrument of professional service, is not to be used in whole or in part, for any other project without prior written authorization.

MARK	DATE	DESCRIPTION
	11/1/2022	DSA RESUBMITTAL

LICENSED ARCHITECT — VINOD KUMAR — No. C-26843 — STATE OF CALIFORNIA

TETER, LLP
FRESNO HEADQUARTERS
VISALIA | BAKERSFIELD | MODESTO | SAN LUIS OBISPO
ARCHITECTS ENGINEERS CONNECTED

TULARE CAMPUS CTE
COLLEGE OF THE SEQUOIAS
4999 E. BARDSLEY AVE.
TULARE, CA

DRAWING TITLE
FLOOR PLAN - BUILDING E

PROJECT NO.
21-12032

DRAWING
A210

PLOT DATE: 11/1/2022 9:58:16 PM

BUILDING E - EQUIPMENT PLATFORM PLAN (FOR E11) 1/8" = 1'-0" | 25

FLOOR PLAN - BUILDING E 1/8" = 1'-0" | 10

\\tetr-file1\Users\ryan.odom\Documents\12032-A-COS Tulare CTE_ryan.odomNLB27.rvt

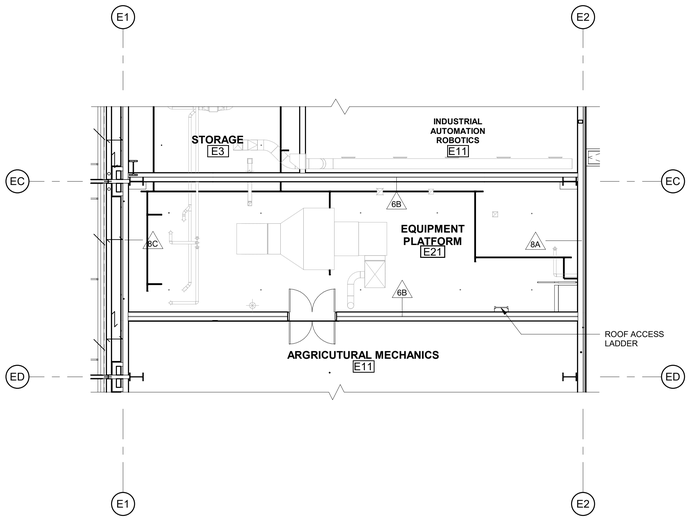

WALL TYPE PLAN - BUILDING E EQUIPMENT PLATFORM PLAN (FOR E11) 1/8" = 1'-0" 25

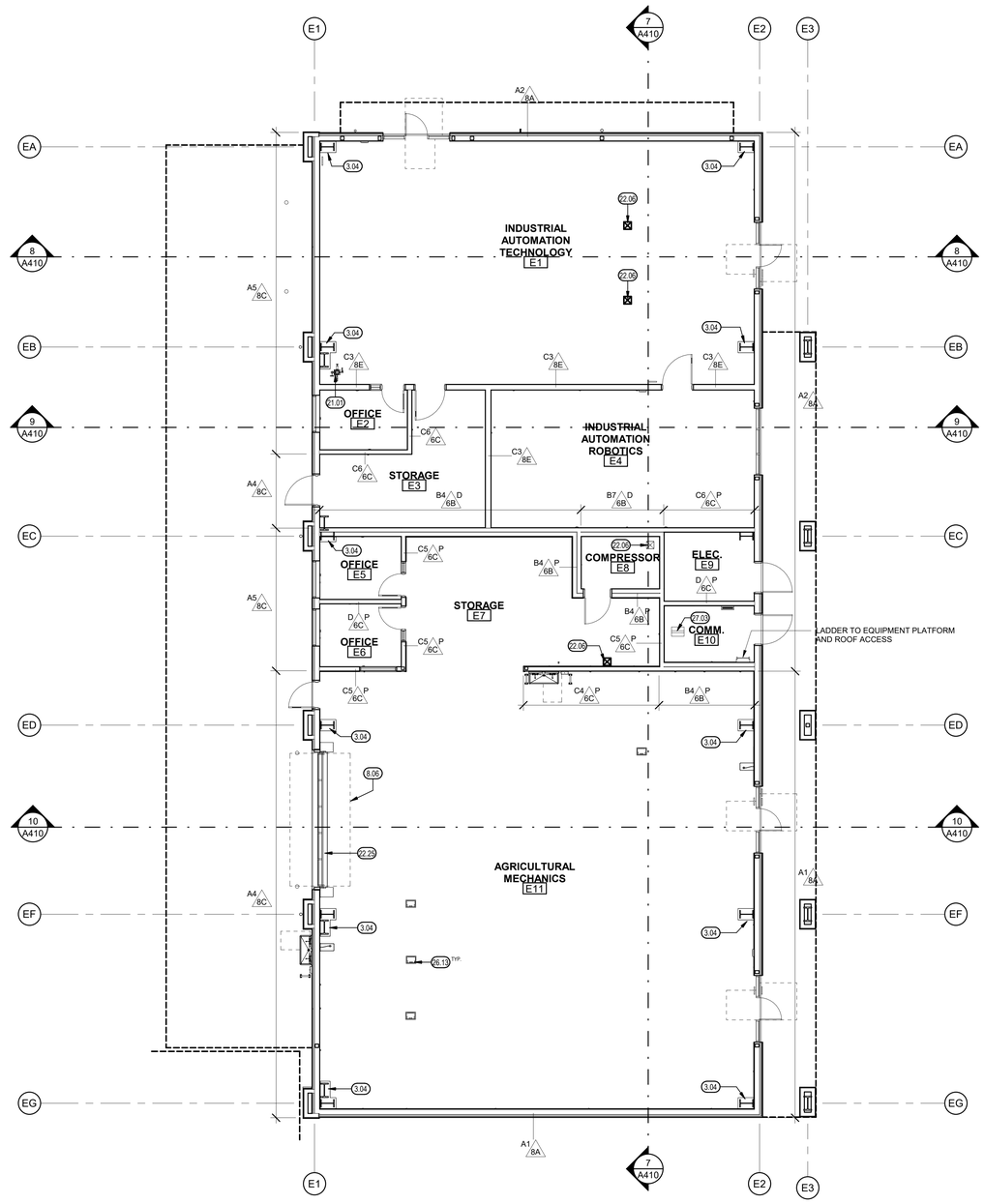

WALL AND CURB TYPE PLAN - BUILDING E 1/8" = 1'-0" 10

KEYNOTES (X.XX)

3.04	8" HIGH CONCRETE CURB, TYP.
8.06	DASHED LINE INDICATES BI-FOLD DOOR IN OPEN POSITION
21.01	FIRE SPRINKLER RISER, SEE FIRE PROTECTION
22.06	FLOOR DRAIN/FLOOR SINK, SEE PLUMBING
22.25	TRENCH DRAIN, SEE PLUMBING
26.13	POWER/DATA FLOOR BOX, SEE ELECTRICAL
27.03	POST RACK, SEE ELECTRICAL

LEGEND

WALL CURB TYPE, SEE SHEET A822

CURB WIDTH:

A1 - 15"	B1 - 20 1/4"	C1 - 11 1/4"	D - NO CURB
A2 - 13 3/8"	B2 - 16 1/4"	C2 - 9 5/8"	
A3 - 20 3/8"	B3 - 18 5/8"	C3 - 8"	
A4 - 13 7/8"	B4 - 14 5/8"	C4 - 9 1/4"	
A5 - 12 1/4"	B5 - 17"	C5 - 7 5/8"	
	B6 - 15"	C6 - 6"	
	B7 - 13"		

A1 P 8A

WALL HEIGHT DESIGNATION

(BLANK)	WALL FRAMING CONTINUOUS TO UNDERSIDE OF ROOF DECK OR FRAMING, OR TO TOP OF PARAPET UNLESS NOTED OTHERWISE
P	PARTIAL HEIGHT WALL (WALL FRAMING CONTINUOUS TO UNDERSIDE OF CEILING/ EQUIPMENT PLATFORM FRAMING)
FS (X'-X")	FREE STANDING WALL (HEIGHT A.F.F. AS INDICATED) SEE STRUCTURAL FOR CANTILEVERED WALL SUPPORTS
D	DOUBLE WALL AT EQUIPMENT PLATFORM; ONE WALL, FRAMING CONTINUOUS TO UNDERSIDE OF ROOF DECK OR FRAMING. OTHER WALL PARTIAL HEIGHT (FRAMING CONTINUOUS TO UNDERSIDE OF EQUIPMENT PLATFORM FRAMING.) FOR MORE INFORMATION SEE SECTIONS, STRUCTURAL AND DETAILS 4/S600 AND 9/S600

WALL TYPE REFERENCE, SEE SHEET A822

DOTTED LINE ADJACENT TO WALL INDICATES 1-HR FIRE BARRIER. FOR FIRE RATED WALL ASSEMBLY AND PENETRATION DETAILS SEE SHEET A806

KEYPLAN

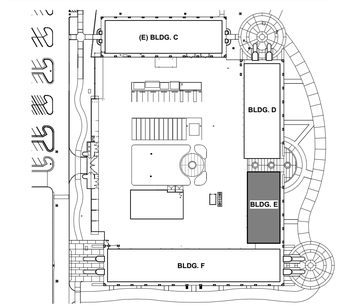

FOR BID ONLY

Teter, LLP expressly reserves its common law copyright and other property rights in these plans. This document, the ideas and designs incorporated herein, as an instrument of professional service, is not to be used in whole or part, for any other project without prior written authorization.

MARK	DATE	DESCRIPTION
	11/1/2022	DSA RESUBMITTAL

LICENSED ARCHITECT * VINOD KUMAR TETER * No. C-23953 * STATE OF CALIFORNIA

TETER, LLP
ARCHITECTS ENGINEERS CONNECTED
FRESNO HEADQUARTERS
VISALIA | BAKERSFIELD | MODESTO | SAN LUIS OBISPO

TULARE CAMPUS CTE
COLLEGE OF THE SEQUOIAS
4999 E. BARDSLEY AVE.
TULARE, CA

DRAWING TITLE
WALL / CURB TYPE PLAN, ITEMS IN SLAB - BUILDING E

PROJECT NO.
21-12032

DRAWING
A211

PLOT DATE: 11/1/2022 9:58:27 PM

\\tet-file1\Users\ryan.odom\Documents\12032-A-COS Tulare CTE_ryan.odomNLB27.rvt

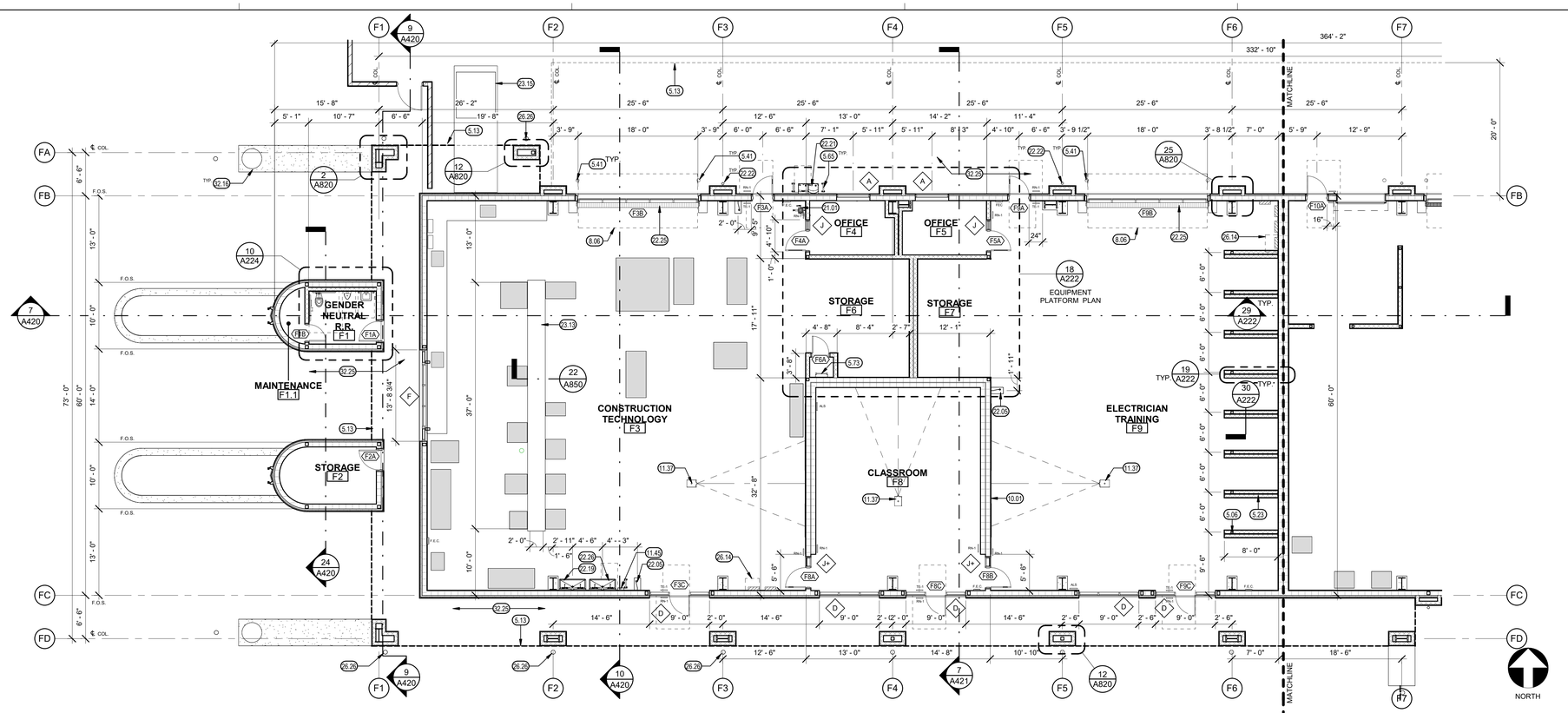

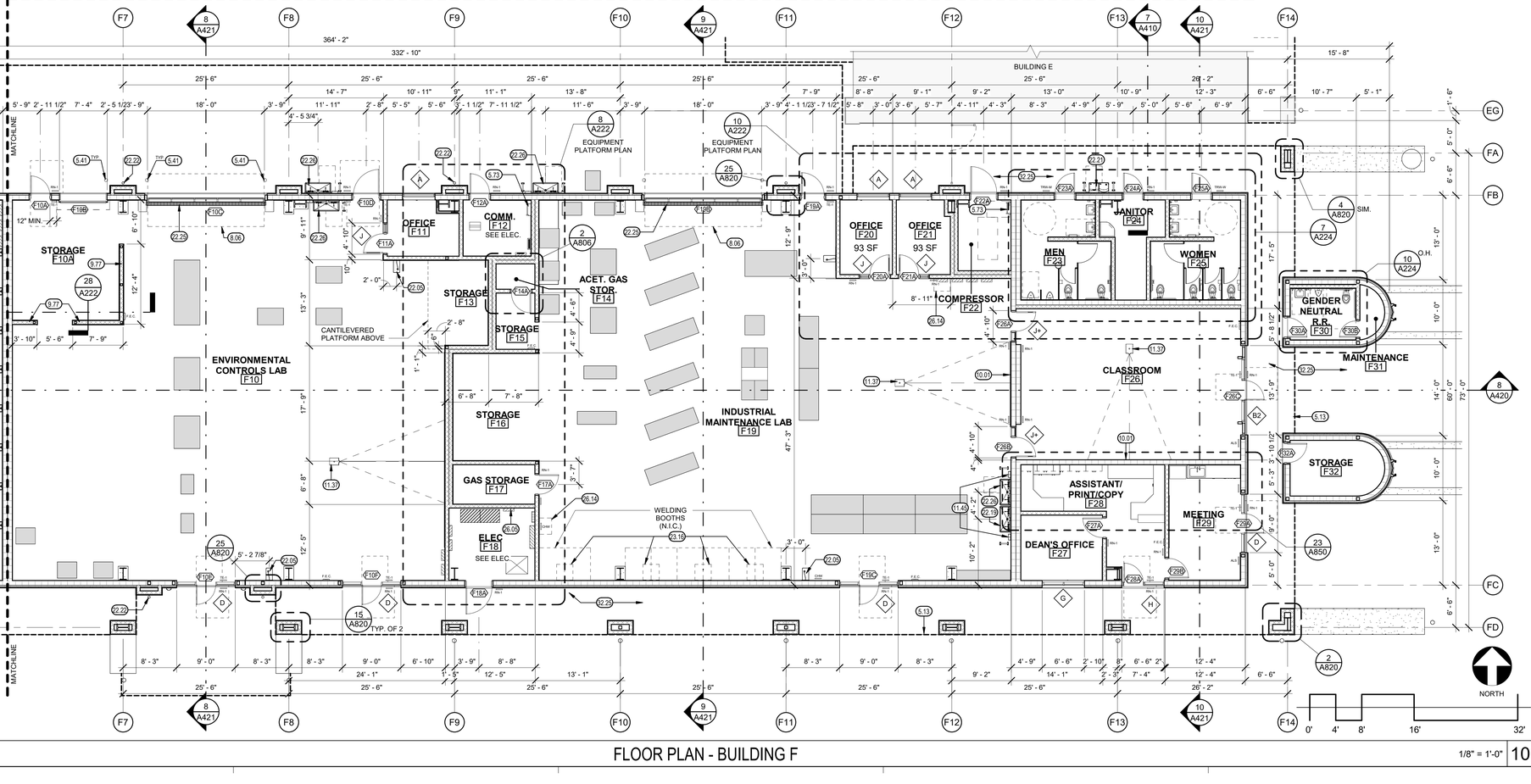

FLOOR PLAN - BUILDING F

1/8" = 1'-0" | 10

KEYNOTES (00.00)

5.06	STRUCTURAL STEEL COLUMN, TYP. SEE STRUCTURAL
5.13	WALKWAY/CANOPY OVERHANG, TYP.
5.23	6" WIDE x 8" HIGH EXPOSED METAL STUD WALL WITH PLYWOOD MOUNTING BOARDS FOR ELECTRICAL TRAINING, INSTALL AFTER ADJACENT FINISHES, SEE 29/A222
5.41	4" STEEL PIPE BOLLARD W/TH CONCRETE FILL, SEE **1 / A105**
5.65	PIPE GUARD AT DRINKING FOUNTAINS & WASH SINKS, SEE DETAIL **9 / A801**
5.73	VERTICAL MAINTENANCE ACCESS LADDER, SEE **24 / A830** FOR PLATFORM ACCESS
8.06	DASHED LINE INDICATES BI-FOLD DOOR IN OPEN POSITION
9.77	12' HIGH PARTIAL HEIGHT WALLS
10.01	HIGH PRESSURE LAMINATE MAGNETIC MARKER BOARDS
11.37	OVERHEAD PROJECTOR, SEE ELECTRICAL & STRUCTURAL FOR MOUNT
11.45	PAPER TOWEL, AND SOAP DISPENSER, SEE INTERIOR ELEVATIONS, TYP.
21.01	FIRE SPRINKLER RISER, SEE FIRE PROTECTION
22.05	EMERGENCY EYE WASH/SHOWER, SEE PLUMBING
22.19	HANDWASH SINK, SEE PLUMBING AND INTERIOR ELEVATIONS, TYP.
22.21	HIGH-LOW DRINKING FOUNTAIN w/BOTTLE FILLER, SEE PLUMBING AND DETAIL **14 / A801**
22.22	PIPE DRAIN FROM GUTTER, TYP. SEE PLUMBING AND EXTERIOR ELEVATIONS
22.25	TRENCH DRAIN, SEE PLUMBING
22.26	ACCESSIBLE HANDWASH SINK, SEE PLUMBING, FOR ACCESSIBLE REQUIREMENTS SEE 9/A801
23.13	DUST COLLECTION CHASE, SEE **22 / A850**
23.15	GROUND MOUNTED DUST COLLECTION SYSTEM, SEE MECHANICAL
23.16	WELDING EXHAUST SYSTEM ON WALL, SEE MECHANICAL
26.05	ELECTRICAL PANEL, SEE ELECTRICAL
26.14	WALL MOUNTED ELECTRICAL TRANSFORMER, SEE ELECTRICAL
26.26	GROUND MOUNTED UP-LIGHTS, SEE ELECTRICAL
32.16	CAST-IN-PLACE CONCRETE BENCH, SEE **5 / A105**
32.25	CONCRETE WALK AT 1.9% MAX. SLOPE, TYP. SEE ENLARGED SITE PLANS

WALL LEGEND

SYM.	DESCRIPTION
	4" METAL STUDS, 16" O.C.
	6" METAL STUDS, 16" O.C.
	DBL. 6" METAL STUDS, 16" O.C.
	8" METAL STUDS, 16" O.C.
	DBL. 8" METAL STUDS, 16" O.C.

LEGEND

- MINIMUM 30"X48" WHEELCHAIR CLEAR SPACE
- MINIMUM 60" DIAMETER WHEELCHAIR TURN AROUND SPACE
- TSIGN — WALL SIGNAGE, SEE **3 / A800** , **5 / A800**, & **18 / A800**
- 201A — DOOR REFERENCE SEE DOOR SCHEDULE ON SHEET A700
- XX — WINDOW REFERENCE SEE WINDOW SCHEDULE ON SHEET A701
- F.E.C. — FIRE EXTINGUISHER (2A;10B;C F.E.) & CABINET, SEE **4 / A850**
- FRT PLYWOOD PLATFORM (PAINT/STAIN)
- MISCELLANEOUS SHOP EQUIPMENT (OFCI), WHERE ANCHORAGE IS REQUIRED SEE **22 / A200**

GENERAL NOTES

A. FOR TYP. ACCESSIBLE TOILET ROOM FIXTURE AND ACCESSORY CLEARANCES AND FIXTURE MOUNTING HEIGHTS, SEE **2 / A801**

B. FOR TYPICAL CASEWORK ANCHORAGE , SEE **7 / A850**

C. PROVIDE FIRE EXTINGUISHER: CLASS 2A: 10B:C MIN. PER NFPA 10, ONE FOR EVERY 3,000 S.F. OR PORTION THEREOF & TRAVEL DISTANCE NOT TO EXCEED 75'-0".

D. ALL DIMENSIONS TO FACE OF STUD, U.N.O.

E. TYP. INTERIOR WALL FINISH FOR STUD WALLS: 5/8" TYPE 'X' GYP. BD., WATER RESISTANT TYPE IN RESTROOMS UNLESS INDICATED FOR TILE FINISH. APPLICATION SHALL COMPLY w/ CBC SECTION 2508. GYP. BD. SHALL BE FASTENED TO SUPPORTS w/ SCREWS.

F. ACOUSTICAL INSULATION: ALL INTERIOR STUD WALLS SHALL BE INSULATED w/ ACOUSTICAL INSULATION:

  a. FOR ACOUSTICAL WALL DETAILS, SEE INSULATED WALL TYPES ON SHEET A827

  b. ALL WALLS & CEILING OF: PRIVATE OFFICES, ELECTRICAL/ MECH. ROOMS (INCLUDING EQUIPMENT PLATFORMS), TOILET ROOMS, SHOPS, STORAGE AREAS, CLASSROOMS ROBOTICS AND MEETING ROOMS

G. DIMENSIONS WITH "MIN.","CLR.", OR "ABSOLUTE" IS MEASURED FROM FACE OF WALL FINISH.

H. FOR ACCESSIBLE DOOR MANUEVERING CLEARANCES, SEE **9 / A800**

I. CONTRACTOR SHALL PATCH, REPAIR OR REPLACE ANY ADJACENT WORK (WALL, CEILING, FLOOR SURFACES, ETC.) THAT IS DAMAGED, REMOVED AND/OR DEMOLISHED DURING THE COURSE OF CONSTRUCTION. SEE SPECIFICATION REQUIREMENTS FOR CUTTING & PATCHING.

J. ALL FLOOR SUBSTRATES ARE TO BE CLEANED, PATCHED, REPAIRED, LEVELED, AND PREPARED AS REQUIRED BY FLOORING FINISH MANUFACTURER RECOMMENDATIONS FOR FLOORING FINISH SYSTEM SCHEDULED.

K. ALL MANUFACTURER REQUIRED TESTING, CORRECTIVE MEASURES, AND PREPARATIONS WITH REGARD TO EXISTING OR COMPLETED CONCRETE SLAB, INCLUDING PATCHED AREAS, SHALL BE INCLUDED AND PERFORMED.

L. SEE SHEET A201 FOR ADDITIONAL UTILITIES AND EQUIPMENT MOUNTED IN FLOOR.

KEYPLAN

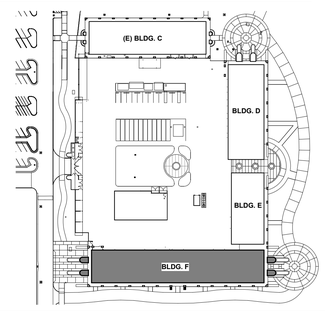

FOR BID ONLY

Teter, LLP expressly reserves its common law copyright and other property rights in these plans. This document, the ideas and designs incorporated herein, as an instrument of professional service, is not to be used in whole or in part, for any other project without prior written authorization.

MARK	DATE	DESCRIPTION
	11/1/2022	DSA RESUBMITTAL

TETER, LLP
ARCHITECTS ENGINEERS CONNECTED
FRESNO HEADQUARTERS
VISALIA | BAKERSFIELD | MODESTO | SAN LUIS OBISPO

TULARE CAMPUS CTE
COLLEGE OF THE SEQUOIAS
4999 E. BARDSLEY AVE.
TULARE, CA

DRAWING TITLE
FLOOR PLAN - BUILDING F

PROJECT NO.
21-12032

DRAWING
A220

PLOT DATE: 11/1/2022 9:58:46 PM

\\tetr-file1\Users\ryan.odom\Documents\12032-A-COS Tulare CTE_ryan.odomNLB27.rvt

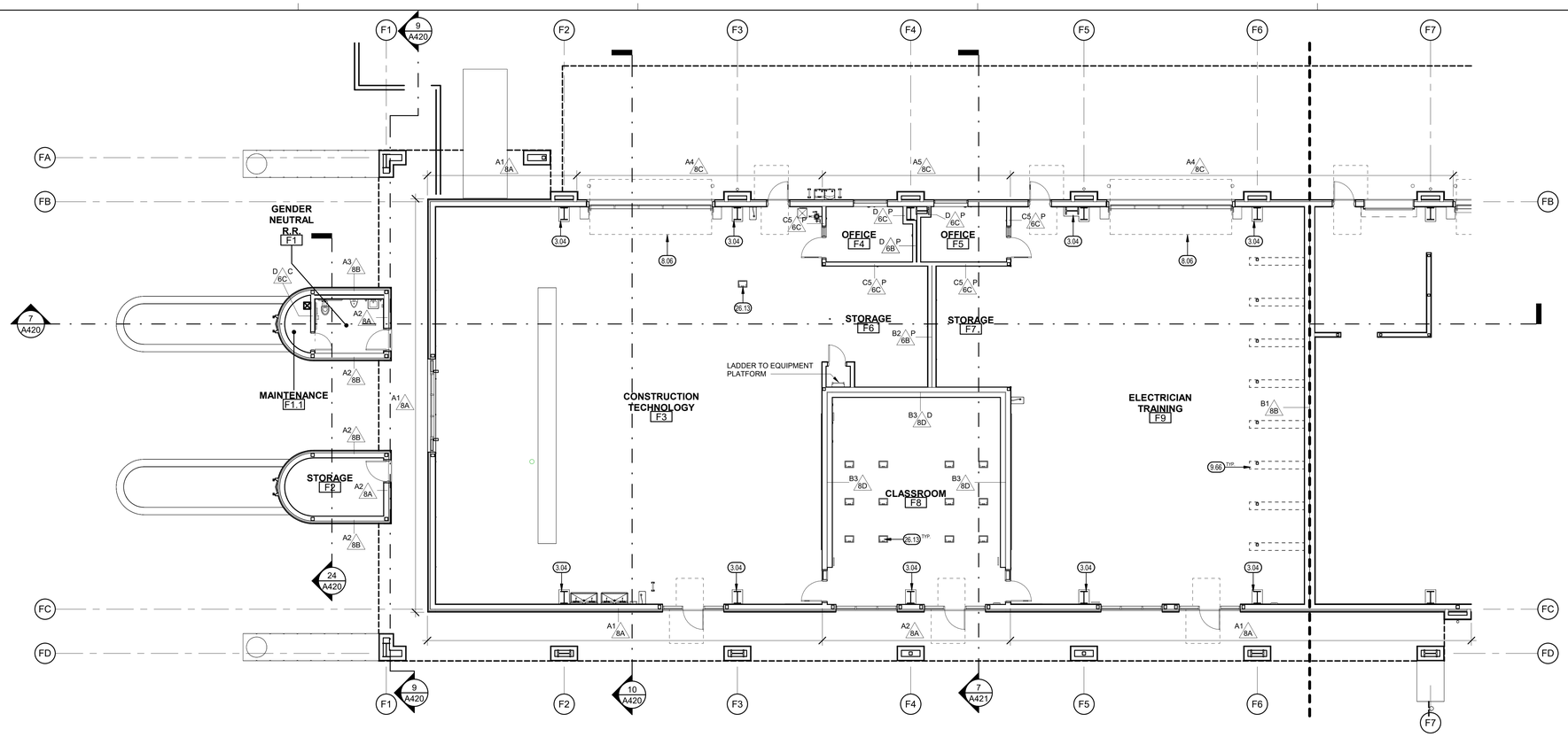

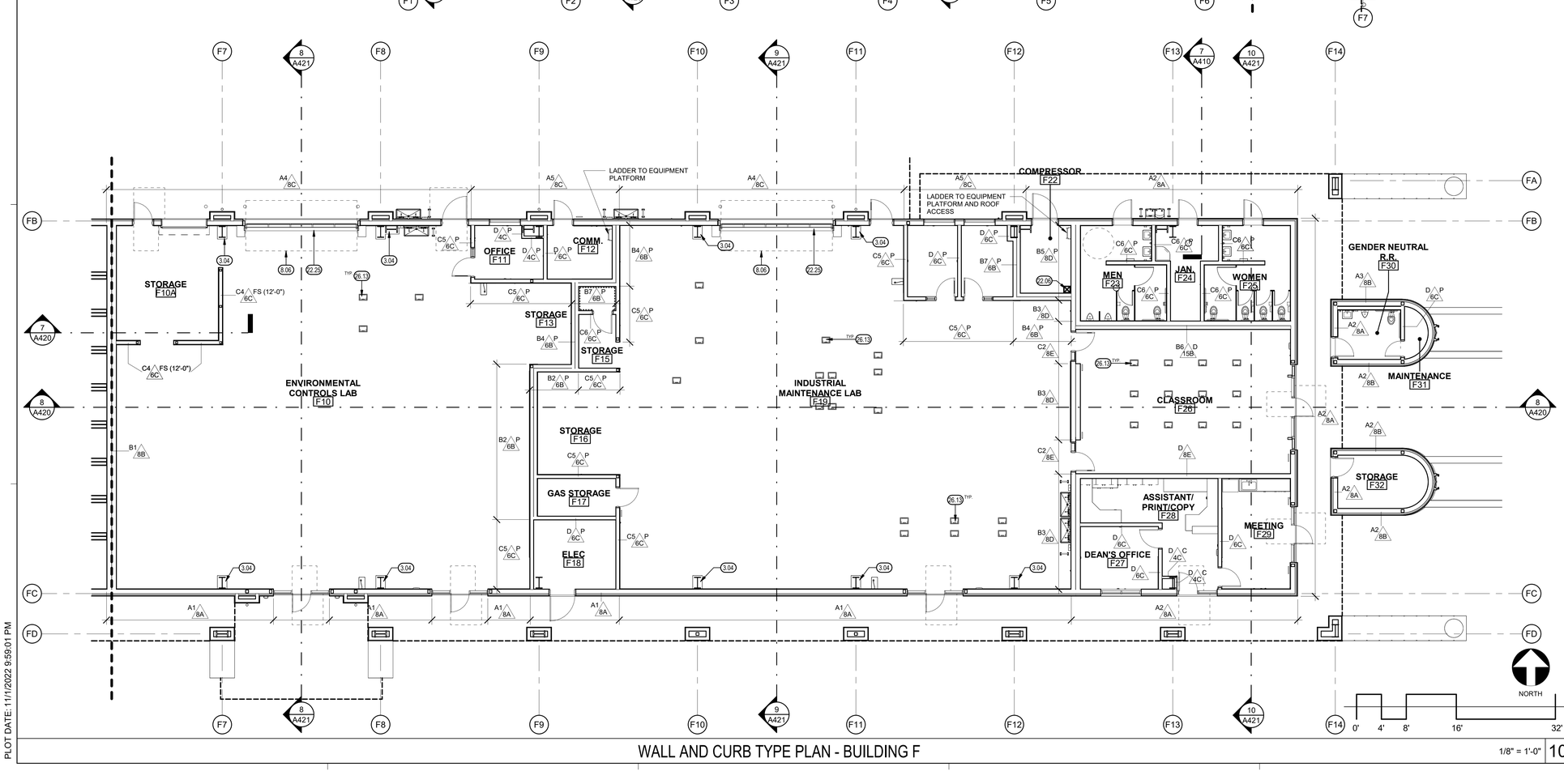

KEYNOTES (X.XX)

3.04	8" HIGH CONCRETE CURB, TYP.
8.06	DASHED LINE INDICATES BI-FOLD DOOR IN OPEN POSITION
9.66	INSTALL 8' PARTITIONS (NO CURB) FOR ELECTRICAL TRAINING AFTER SURROUNDING WALL & FLOOR FINISHES ARE COMPLETE
22.06	FLOOR DRAIN/FLOOR SINK, SEE PLUMBING
22.25	TRENCH DRAIN, SEE PLUMBING
26.13	POWER/DATA FLOOR BOX, SEE ELECTRICAL

LEGEND

WALL CURB TYPE, SEE SHEET A822

CURB WIDTH:

A1 - 15"	B1 - 20 1/4"	C1 - 11 1/4"	D - NO CURB
A2 - 13 3/8"	B2 - 16 1/4"	C2 - 9 5/8"	
A3 - 20 3/8"	B3 - 18 5/8"	C3 - 8"	
A4 - 13 7/8"	B4 - 14 5/8"	C4 - 9 1/4"	
A5 - 12 1/4"	B5 - 17"	C5 - 7 5/8"	
	B6 - 15"	C6 - 6"	
	B7 - 13"		

A1 P 6A

WALL HEIGHT DESIGNATION

(BLANK)	WALL FRAMING CONTINUOUS TO UNDERSIDE OF ROOF DECK OR FRAMING, OR TO TOP OF PARAPET UNLESS NOTED OTHERWISE
P	PARTIAL HEIGHT WALL (WALL FRAMING CONTINUOUS TO UNDERSIDE OF CEILING/ EQUIPMENT PLATFORM FRAMING)
FS (X'-X")	FREE STANDING WALL (HEIGHT A.F.F. AS INDICATED) SEE STRUCTURAL FOR CANTILEVERED WALL SUPPORTS
D	DOUBLE WALL AT EQUIPMENT PLATFORM; ONE WALL, FRAMING CONTINUOUS TO UNDERSIDE OF ROOF DECK OR FRAMING. OTHER WALL PARTIAL HEIGHT (FRAMING CONTINUOUS TO UNDERSIDE OF EQUIPMENT PLATFORM FRAMING.) FOR MORE INFORMATION SEE SECTIONS, STRUCTURAL AND DETAILS 4/S600 AND 9/S600

WALL TYPE REFERENCE, SEE SHEET A822

DOTTED LINE ADJACENT TO WALL INDICATES 1-HR FIRE BARRIER. FOR FIRE RATED WALL ASSEMBLY AND PENETRATION DETAILS SEE SHEET A806

KEYPLAN

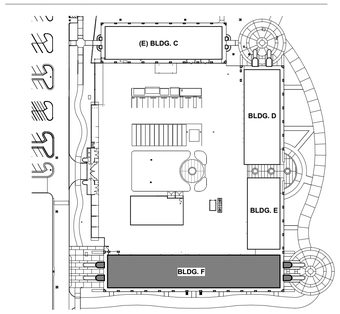

WALL AND CURB TYPE PLAN - BUILDING F

1/8" = 1'-0"

FOR BID ONLY

Teter, LLP expressly reserves its common law copyright and other property rights in these plans. This document, the ideas and designs incorporated herein, as an instrument of professional service, is not to be used in whole or part, for any other project without prior written authorization.

MARK	DATE	DESCRIPTION
	11/1/2022	DSA RESUBMITTAL

TETER, LLP
ARCHITECTS ENGINEERS CONNECTED
FRESNO HEADQUARTERS
VISALIA | BAKERSFIELD | MODESTO | SAN LUIS OBISPO

TETER

TULARE CAMPUS CTE
COLLEGE OF THE SEQUOIAS
4999 E. BARDSLEY AVE.
TULARE, CA

DRAWING TITLE
WALL AND CURB TYPE PLAN - BUILDING F

PROJECT NO.
21-12032

DRAWING
A221

PLOT DATE: 11/1/2022 9:59:01 PM

\\tetr-file1\Users\ryan.odom\Documents\12032-A-COS Tulare CTE_ryan.odomNLB27.rvt

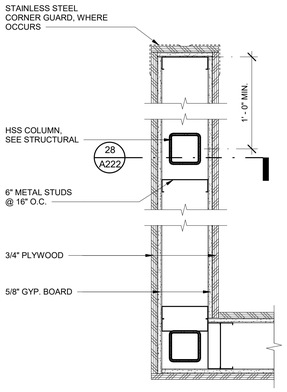

PARTIAL HEIGHT WALL - PLAN VIEW
1 1/2" = 1'-0" | 27

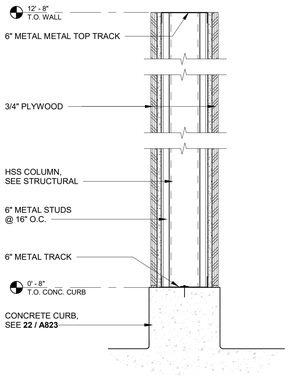

PARTIAL HEIGHT WALL - SECTION
1 1/2" = 1'-0" | 28

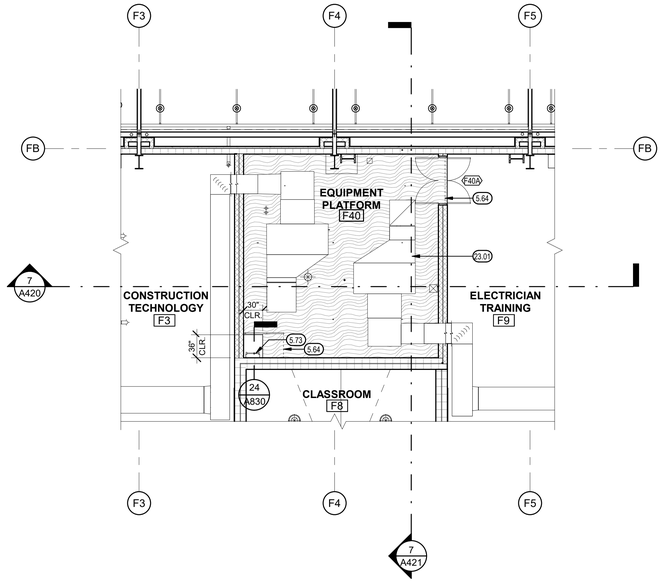

BUILDING F - EQUIPMENT PLATFORM PLAN (FOR F9)
1/8" = 1'-0" | 18

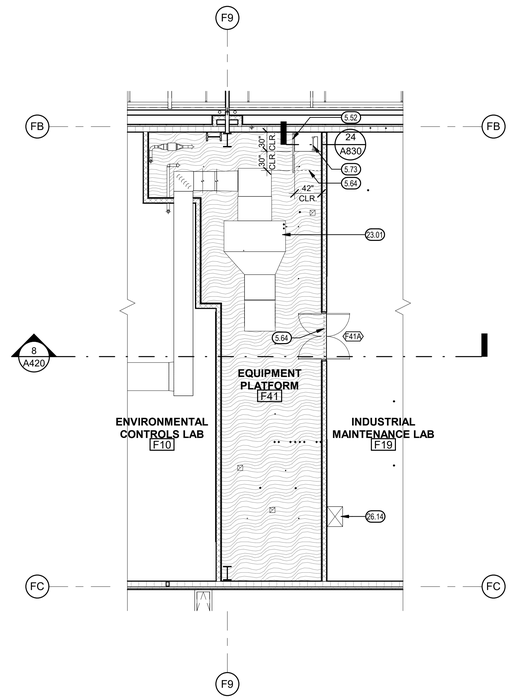

BUILDING F - EQUIPMENT PLATFORM PLAN (FOR F19)
1/8" = 1'-0" | 8

KEYNOTES (X.XX)

5.22	6" METAL STUD WALL WITH 5/8" GYP. BOARD TO ROOF
5.52	GALVANIZED PIPE GUARD FOR FALL PROTECTION, SEE 29/A830
5.64	STEEL SAFETY CHAIN, SEE **7 / A813** , TYP. (SIM. AT PLATFORM ACCESS)
5.73	VERTICAL MAINTENANCE ACCESS LADDER, SEE **24 / A830** FOR PLATFORM ACCESS
7.64	ROOF ACCESS HATCH ABOVE, SEE **22 / A830** & **28 / A830**; SEE **23 / A830** FOR LADDER TO ROOF
23.01	HVAC EQUIPMENT, SEE MECH
23.14	DUCTS & EQUIPMENT BELOW PLATFORM
26.14	WALL MOUNTED ELECTRICAL TRANSFORMER, SEE ELECTRICAL

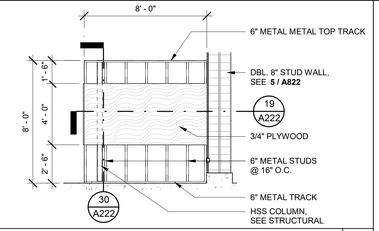

TRAINING WALL - ELEVATION
1/4" = 1'-0" | 29

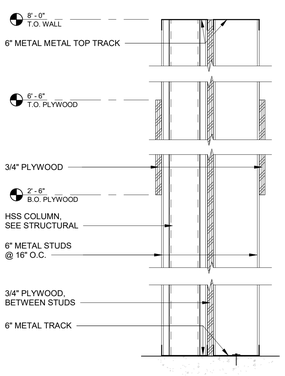

TRAINING WALL - SECTION
1 1/2" = 1'-0" | 30

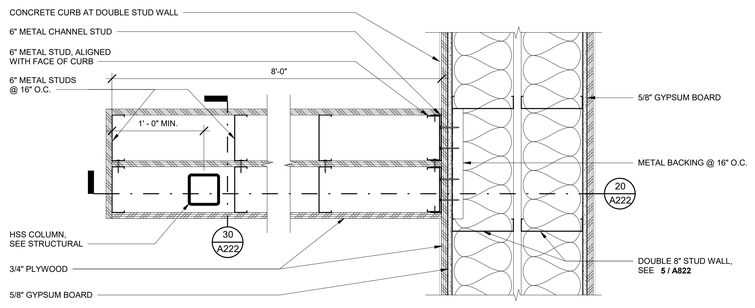

TRAINING WALL - F9 - ELECTRICAL TRAINING
1 1/2" = 1'-0" | 19

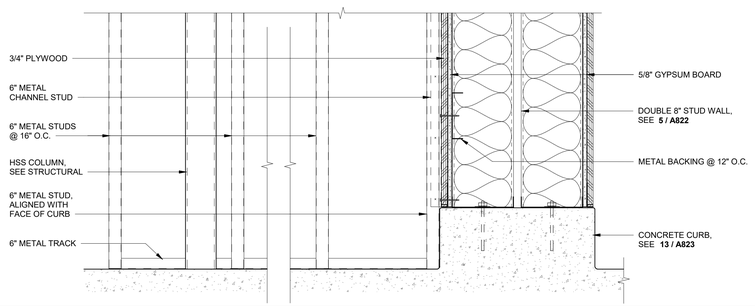

TRAINING WALL - SECTION
1 1/2" = 1'-0" | 20

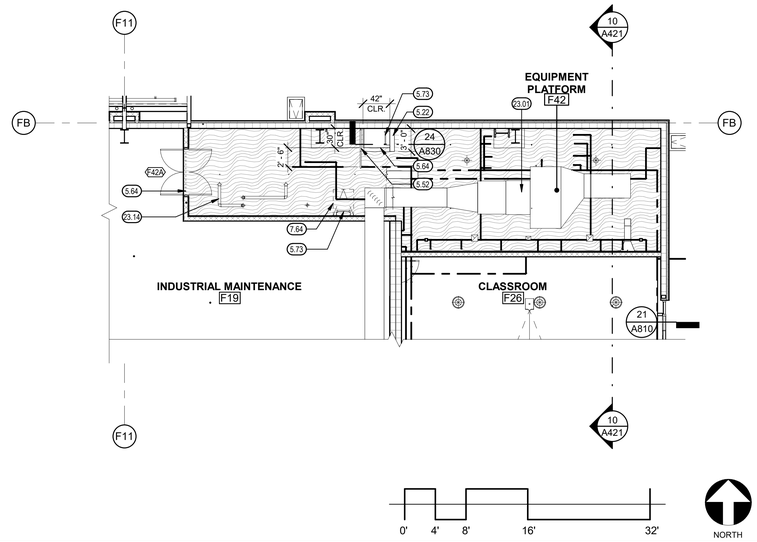

BUILDING F - EQUIPMENT PLATFORM PLAN (FOR F19)
1/8" = 1'-0" | 10

LEGEND

- MINIMUM 30"X48" WHEELCHAIR CLEAR SPACE
- MINIMUM 60" DIAMETER WHEELCHAIR TURN AROUND SPACE
- TRSH.M — WALL SIGNAGE, SEE **3 / A800**, **5 / A800**, & **18 / A800**
- 201A — DOOR REFERENCE SEE DOOR SCHEDULE ON SHEET A700
- XX — WINDOW REFERENCE SEE WINDOW SCHEDULE ON SHEET A701
- FEC — FIRE EXTINGUISHER (2A;10B;C F.E.) & CABINET, SEE **4 / A850**
- FRT PLYWOOD PLATFORM (PAINT/STAIN)
- MISCELLANEOUS SHOP EQUIPMENT (OFCI), WHERE ANCHORAGE IS REQUIRED SEE **22 / A200**

KEYPLAN

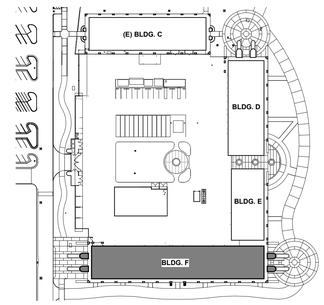

PLOT DATE: 11/1/2022 9:59:12 PM

FOR BID ONLY

Teter, LLP expressly reserves its common law copyright and other property rights in these plans. This document, the ideas and designs incorporated herein, as an instrument of professional service, is not to be used in whole or part, for any other project without prior written authorization.

MARK	DATE	DESCRIPTION
	11/1/2022	DSA RESUBMITTAL

TETER, LLP
FRESNO HEADQUARTERS
VISALIA | BAKERSFIELD | MODESTO | SAN LUIS OBISPO
ARCHITECTS ENGINEERS CONNECTED

TULARE CAMPUS CTE
COLLEGE OF THE SEQUOIAS
4999 E. BARDSLEY AVE.
TULARE, CA

DRAWING TITLE
BUILDING F MECHANICAL PLATFORM PLAN

PROJECT NO.
21-12032

DRAWING
A222

\\tetr-file1\Users\ryan.odom\Documents\12032-A-COS Tulare CTE_ryan.odomNLB27.rvt

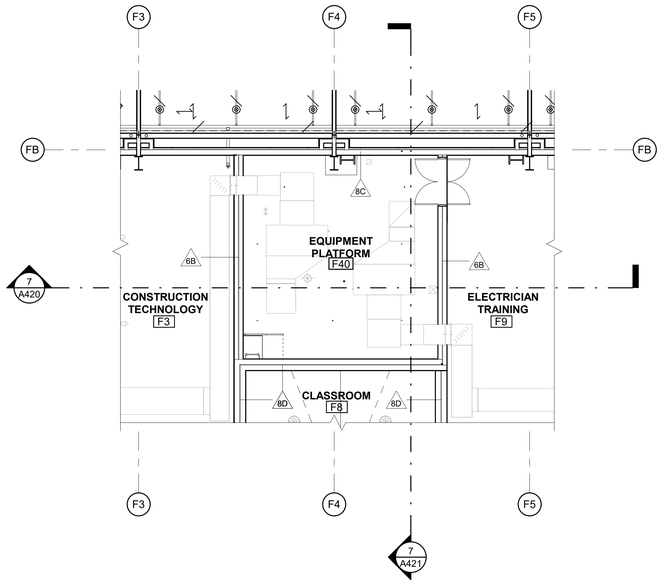

WALL TYPE PLAN - BUILDING F EQUIPMENT PLAN (FOR F9) 1/8" = 1'-0" 18

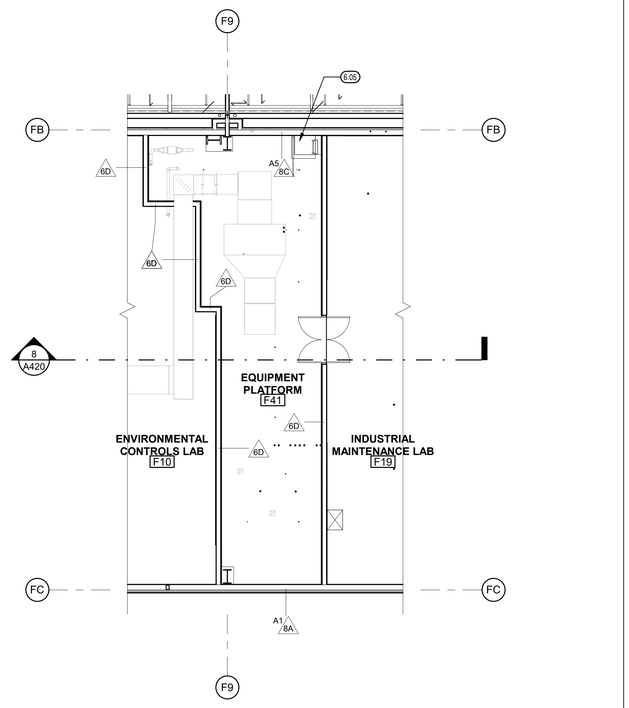

WALL TYPE PLAN - BUILDING F EQUIPMENT PLAN (FOR F19) 1/8" = 1'-0" 8

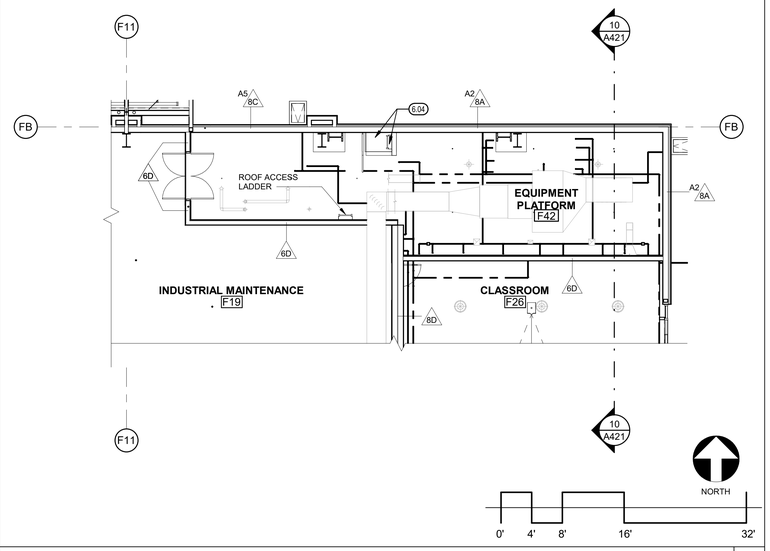

WALL TYPE PLAN - BUILDING F EQUIPMENT PLAN (FOR F19) 1/8" = 1'-0" 10

KEYNOTES (X.XX)

6.04 SEE OPENING & WALL AT **10 / A222**
6.05 SEE OPENING AT **8 / A222**

LEGEND

WALL CURB TYPE, SEE SHEET A822

CURB WIDTH:

A1 - 15"	B1 - 20 1/4"	C1 - 11 1/4"	D - NO CURB
A2 - 13 3/8"	B2 - 16 1/4"	C2 - 9 5/8"	
A3 - 20 3/8"	B3 - 18 5/8"	C3 - 8"	
A4 - 13 7/8"	B4 - 14 5/8"	C4 - 9 1/4"	
A5 - 12 1/4"	B5 - 17"	C5 - 7 5/8"	
	B6 - 15"	C6 - 6"	
	B7 - 13"		

WALL HEIGHT DESIGNATION

(BLANK)	WALL FRAMING CONTINUOUS TO UNDERSIDE OF ROOF DECK OR FRAMING, OR TO TOP OF PARAPET UNLESS NOTED OTHERWISE
P	PARTIAL HEIGHT WALL (WALL FRAMING CONTINUOUS TO UNDERSIDE OF CEILING/ EQUIPMENT PLATFORM FRAMING)
FS (X'-X")	FREE STANDING WALL (HEIGHT A.F.F. AS INDICATED) SEE STRUCTURAL FOR CANTILEVERED WALL SUPPORTS
D	DOUBLE WALL AT EQUIPMENT PLATFORM; ONE WALL FRAMING CONTINUOUS TO UNDERSIDE OF ROOF DECK OR FRAMING. OTHER WALL PARTIAL HEIGHT (FRAMING CONTINUOUS TO UNDERSIDE OF EQUIPMENT PLATFORM FRAMING.) FOR MORE INFORMATION SEE SECTIONS, STRUCTURAL AND DETAILS 4/S600 AND 9/S600

A1 P 6A — WALL TYPE REFERENCE, SEE SHEET A822

DOTTED LINE ADJACENT TO WALL INDICATES 1-HR FIRE BARRIER. FOR FIRE RATED WALL ASSEMBLY AND PENETRATION DETAILS SEE SHEET A806

KEYPLAN

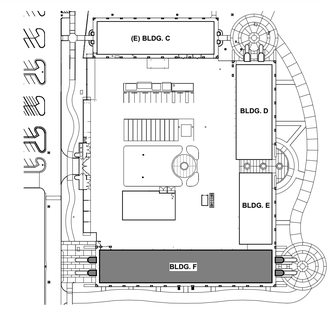

FOR BID ONLY

Teter, LLP expressly reserves its statutory law copyright and other property rights in these plans. This document, the ideas and designs incorporated herein, as an instrument of professional service, is not to be used in whole or part, for any other project without prior written authorization.

MARK	DATE	DESCRIPTION
	11/1/2022	DSA RESUBMITTAL

TETER, LLP
ARCHITECTS ENGINEERS CONNECTED
FRESNO HEADQUARTERS
VISALIA | BAKERSFIELD | MODESTO | SAN LUIS OBISPO

TETER

TULARE CAMPUS CTE
COLLEGE OF THE SEQUOIAS
4999 E. BARDSLEY AVE.
TULARE, CA

DRAWING TITLE
WALL TYPE PLAN - BUILDING F EQUIPMENT PLATFORM

PROJECT NO.
21-12032

DRAWING
A223

PLOT DATE: 11/1/2022 9:59:20 PM

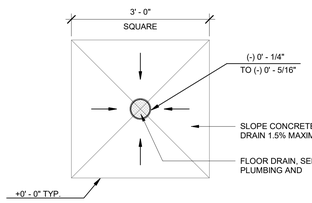

SLAB SLOPE TO DRAIN 3/4" = 1'-0" | 26

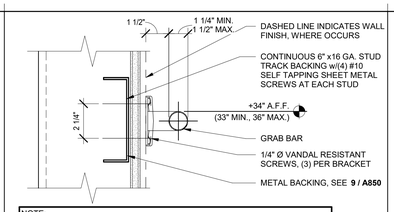

NOTE:
1. AT SHOWER LOCATIONS (IF ANY) SEAL FASTENER PENETRATIONS WITH SILICONE SEALANT.
2. GRAB BARS SHALL NOT ROTATE WITHIN THEIR FITTINGS.
3. GRAB BARS AND ANY WALL OR OTHER SURFACE ADJACENT TO GRAB BARS SHALL BE FREE OF SHARP OR ABRASIVE ELEMENTS AND SHALL HAVE ROUNDED EDGES.
4. THERE SHALL BE NO PROJECTING ELEMENTS MOUNTED TO WALLS WITHIN 12" ABOVE OR 1-1/2" BELOW GRAB BARS.

TYP. GRAB BAR ANCHORAGE 3" = 1'-0" | 21

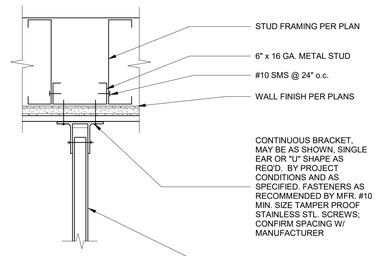

SRH_12_2019

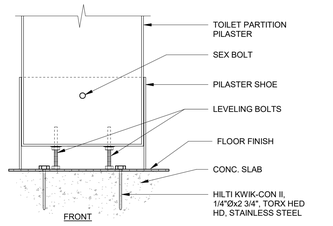

NOTE: VERIFY ANCHORAGE WITH PARTITION MFR. CONDITION MAY VARY FROM DETAIL.

SRH_12_2019

TOILET PARTITION ANCHORAGE 3" = 1'-0" | 17

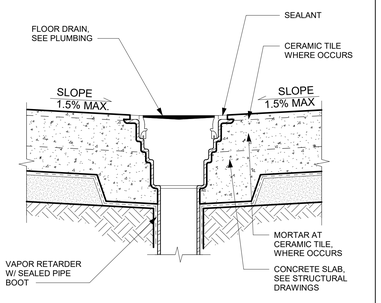

DRAIN @ CONC. SLAB 3" = 1'-0" | 27

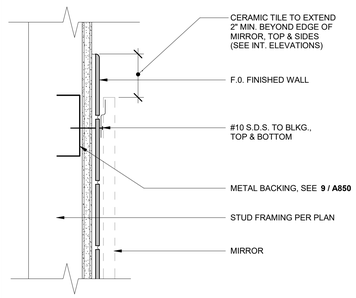

MIRROR ANCHORAGE @ CERAMIC TILE 3" = 1'-0" | 22

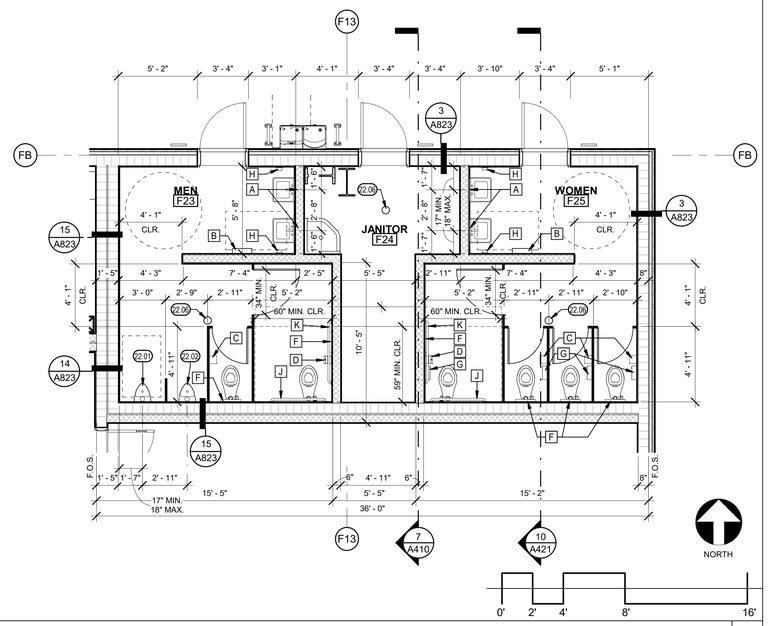

BLDG. F - ENLARGED RESTROOM FLOOR PLAN 1/4" = 1'-0" | 7

KEYNOTES (XX.XX)

8.01 DOOR AND FRAME AS SCHEDULED (SIDE LITES WHERE INDICATED)
22.01 ACCESSIBLE PLUMBING FIXTURE, SEE PLUMBING
22.02 PLUMBING FIXTURE, SEE PLUMBING
22.06 FLOOR DRAIN/FLOOR SINK, SEE PLUMBING
26.22 WALL MOUNTED LIGHT FIXTURE, SEE ELECTRICAL

WALL LEGEND

SYM.	DESCRIPTION
	4" METAL STUDS, 16" O.C.
	6" METAL STUDS, 16" O.C.
	6" DBL. METAL STUDS, 16" O.C.
	8" METAL STUDS, 16" O.C.
	8" DBL. METAL STUDS, 16" O.C.

LEGEND

- MINIMUM 30"X48" WHEELCHAIR CLEAR SPACE
- MINIMUM 60" DIAMETER WHEELCHAIR TURN AROUND SPACE
- WALL SIGNAGE, SEE **3 / A800**, **5 / A800**, & **18 / A800**
- DOOR REFERENCE SEE DOOR SCHEDULE ON SHEET A700
- WINDOW REFERENCE SEE WINDOW SCHEDULE ON SHEET A701
- FIRE EXTINGUISHER (2A;10B;C F.E.) & CABINET, SEE **4 / A850**
- FRT PLYWOOD PLATFORM (PAINT/STAIN)
- MISCELLANEOUS SHOP EQUIPMENT (OFCI), WHERE ANCHORAGE IS REQUIRED SEE **22 / A200**
- TOILET ACCESSORY PER SCHEDULE AS INDICATED ON FLOOR PLANS AND INTERIOR ELEVATIONS

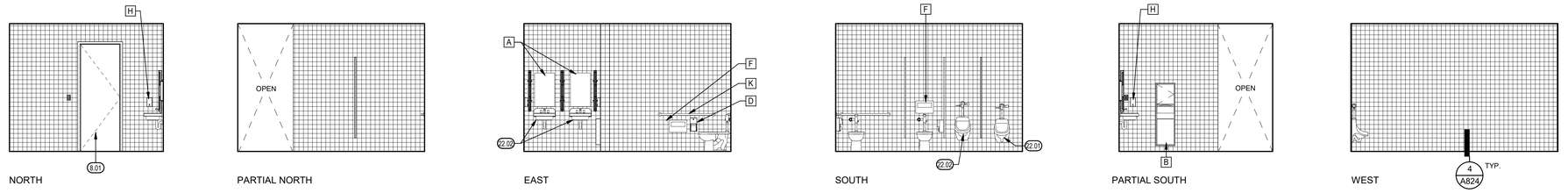

INTERIOR ELEVATIONS 1/4" = 1'-0" | 9

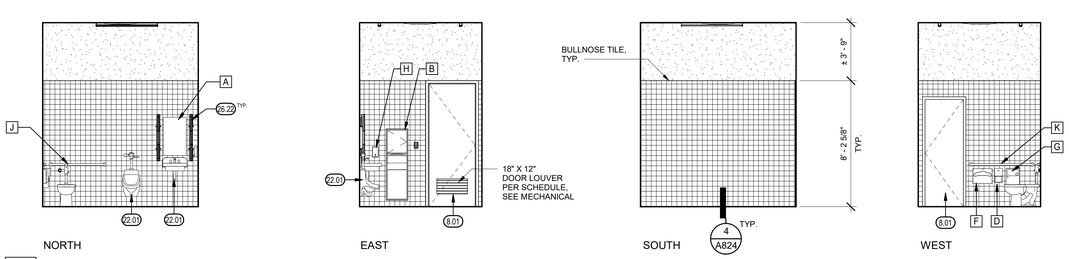

INTERIOR ELEVATIONS 1/4" = 1'-0" | 20

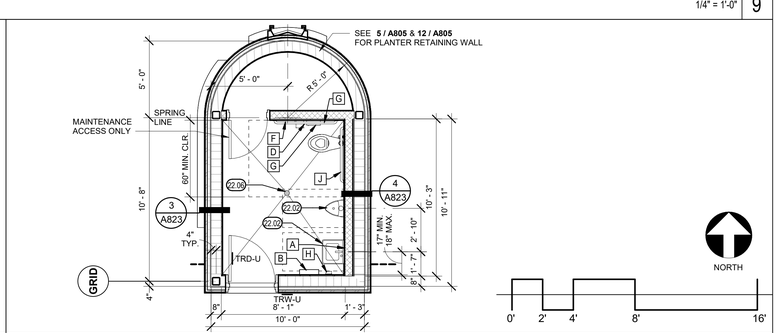

GENDER NEUTRAL RESTROOMS (TYP. OF 3) D2 & F1 SHOWN, F30 O.H. 1/4" = 1'-0" | 10

TOILET ACCESSORY SCHEDULE

MARK	DESCRIPTION	MFR.	MODEL NO.	REMARKS
A	MIRROR (18" X 30")	BOBRICK	B-165	SURFACE MTD.
B	PAPER TOWEL DISPENSER / WASTE RECEPTACLE COMBO UNIT	BOBRICK	B-3944	RECESSED 4" WASTE RECEPTECLE PROJECION
C	TOILET TISSUE DISPENSER	BOBRICK	B-2888	SURFACE / PARTITION MTD.
D	TOILET TISSUE DISPENSER	BOBRICK	B-3888	RECESSED
E	TOILET SEAT COVER DISPENSER	BOBRICK	B-301	RECESSED
F	TOILET SEAT COVER DISPENSER	BOBRICK	B-4221	SURFACE MTD.
G	SANITARY NAPKIN DISPOSAL UNIT	BOBRICK	B-270	SURFACE MTD.
H	SOAP DISPENSER	BOBRICK	B-2111	SURFACE MTD.
J	GRAB BAR, REAR	BOBRICK	B-6806 SERIES	42" LONG
K	GRAB BAR, SIDE	BOBRICK	B-6806 SERIES	48" LONG

GENERAL NOTES

A. FOR TYPICAL ACCESSIBLE TOILET ROOM FIXTURE AND ACCESSORY MOUNTING HEIGHTS AND CLEARANCES, SEE **2 / A801**
B. ALL NEW FLOOR SUBSTRATES ARE TO BE CLEANED, PATCHED, REPAIRED, LEVELED, AND PREPARED AS REQUIRED BY FLOORING FINISH MANUFACTURER RECOMMENDATIONS FOR FLOORING FINISH SYSTEM SCHEDULED
C. TYP. INTERIOR WALL FINISH FOR STUD WALLS: 5/8" TYPE 'X' GYP. BD., WATER RESISTANT TYPE IN RESTROOMS WHERE LOCATED WITHIN 2'-0" OF THE FRONT AND/OR SIDES OF PLUMBING FIXT. GYP. BD. APPLICATION SHALL COMPLY w/ CBC SECTION 2508. GYP. BD. SHALL BE FASTENED TO SUPPORTS w/ SCHEDULE.

FOR BID ONLY

Teter, LLP expressly reserves its common law copyright and other property rights in these plans. This document, the ideas and designs incorporated herein, as an instrument of professional service, is not to be used in whole or part, for any other project without prior written authorization.

MARK	DATE	DESCRIPTION
	11/1/2022	DSA RESUBMITTAL

LICENSED ARCHITECT * VINCENT LUCERO * No. 23423 * STATE OF CALIFORNIA

TETER, LLP
FRESNO HEADQUARTERS
VISALIA | BAKERSFIELD | MODESTO | SAN LUIS OBISPO
ARCHITECTS ENGINEERS CONNECTED

TETER

TULARE CAMPUS CTE
COLLEGE OF THE SEQUOIAS
4999 E. BARDSLEY AVE.
TULARE, CA

DRAWING TITLE
ENLARGED FLOOR PLANS

PROJECT NO.
21-12032

DRAWING
A224

PLOT DATE: 11/1/2022 9:59:47 PM

\\tet-file1\Users\ryan.odom\Documents\12032-A-COS Tulare CTE_ryan.odomNLB27.rvt

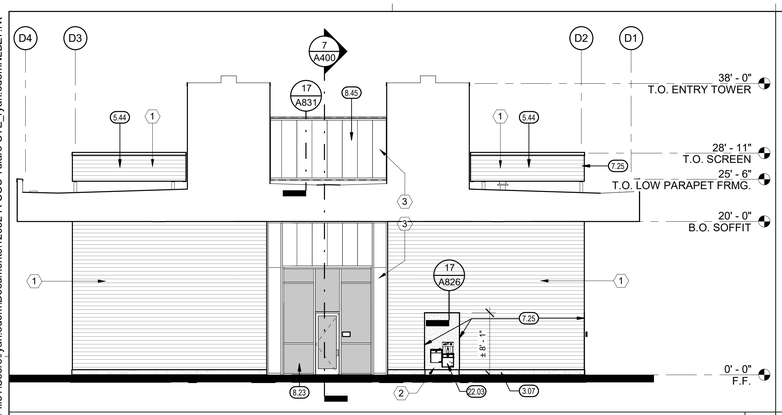

BUILDING D - NORTH (WALL BEYOND) 1/8" = 1'-0" 22

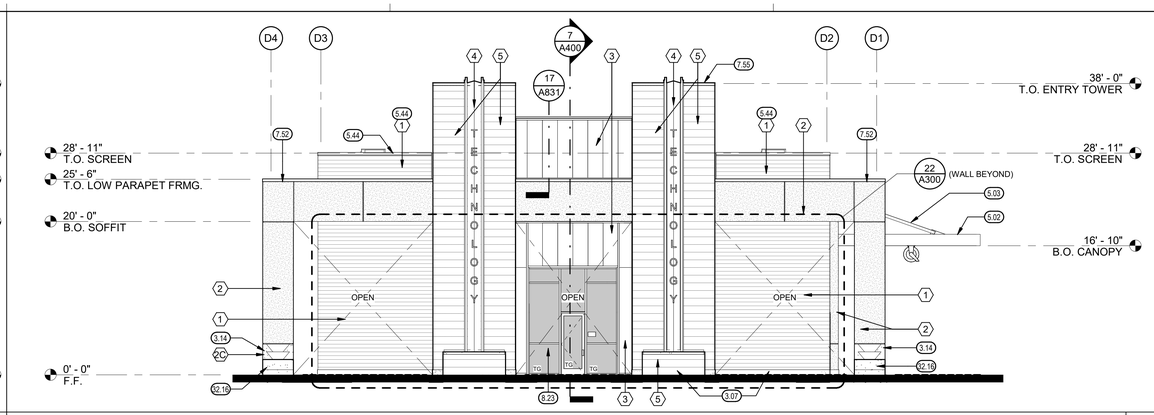

BUILDING D - NORTH 1/8" = 1'-0" 7

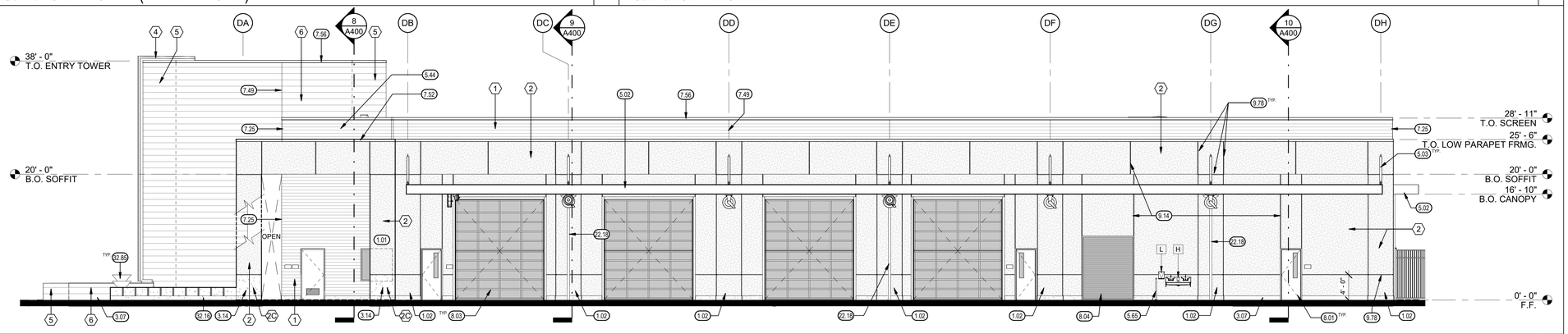

BUILDING D - WEST 1/8" = 1'-0" 8

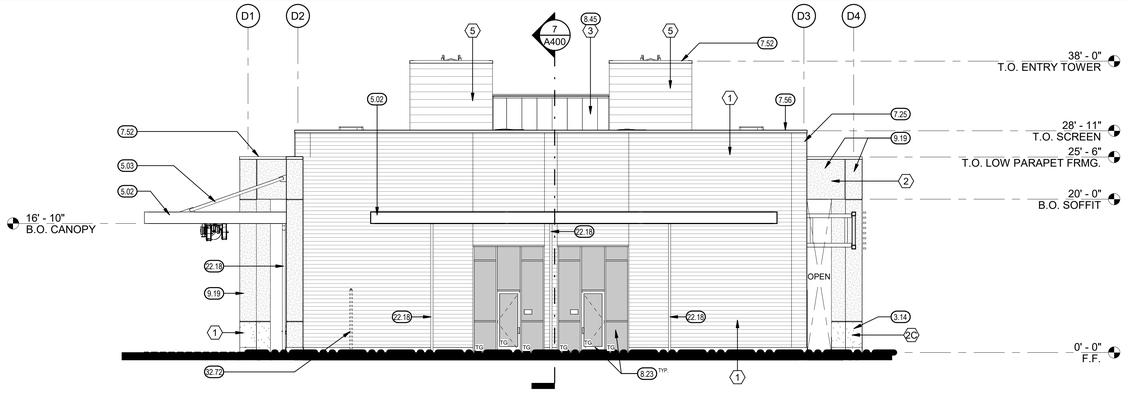

BUILDING D - SOUTH 1/8" = 1'-0" 9

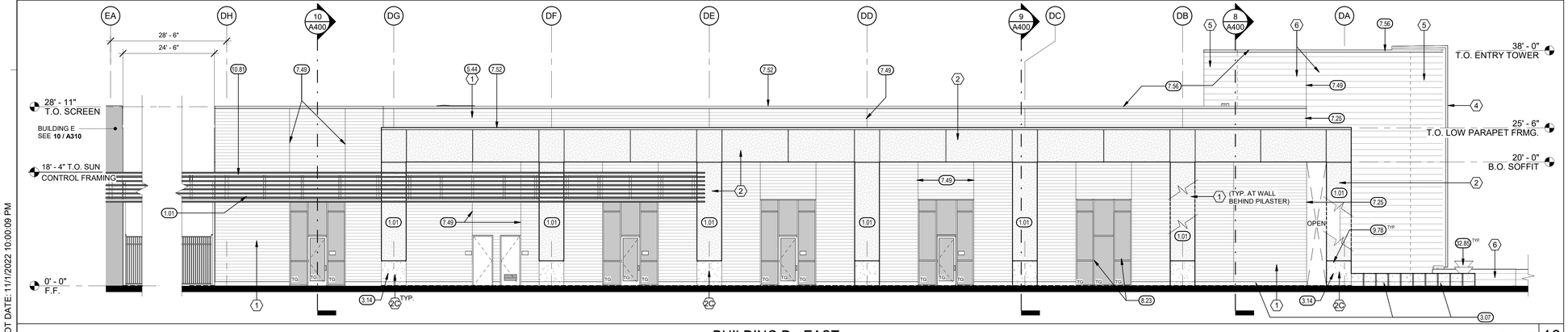

BUILDING D - EAST 1/8" = 1'-0" 10

KEYNOTES

1.01	CONTINUE FINISHES AT WALL BEYOND HIDDEN BY COLUMNS & OTHER ELEMENTS IN FRONT, TYP.
1.02	PILASTER AT BUILDING WALL
3.07	EXPOSED CONCRETE CURB, SACK FINISH, TYP.
3.14	4' HIGH CONCRETE COLUMN BASE/ENCASEMENT, SACK FINISH, SEE 2/A820, 12/A820, AND 13/A821
5.02	STEEL CANOPY, PAINT
5.03	STRUCTURAL STEEL BRACES, PAINT
5.44	MECHANICAL SCREEN, STEEL FRAMING AND METAL SIDING, SCREEN HELD ABOVE ROOF SURFACE TO ALLOW FOR DRAINAGE, SEE **2 / A831**
5.65	PIPE GUARD AT DRINKING FOUNTAINS & WASH SINKS, SEE DETAIL **9 / A801**
7.25	FACTORY FABRICATED MITERED METAL PANEL CORNERS, TYP. SEE **15 / A826**
7.49	METAL PANEL BUTT JOINT WITH CONCEALED SPLICE PLATE, TYP.
7.52	SHEET METAL SHELF FLASHING, PAINT
7.55	PRE-CURVED MTL. CAP FLASHING TO MATCH METAL SIDING
7.56	PRE-FINISHED SHEET METAL CAP TO MATCH WALL SIDING
8.01	DOOR AND FRAME AS SCHEDULED (SIDE LITES WHERE INDICATED)
8.03	VERTICAL BI-FOLD STEEL DOORS WITH GLASS PANELS (FULLY TEMPERED)
8.04	OVERHEAD COILING DOOR & STEEL FRAME
8.23	ALUMINUM CURTAIN WALL WINDOWS & ENTRANCE DOORS, SEE SCHEDULES
8.45	TRANSLUCENT GLAZING PANEL SCREEN WALL WITH SHEET METAL CAP
9.14	CEMENT PLASTER 'M' EXPANSION SCREED, TYP.
9.19	PILASTERS BEYOND NEAR GRID 'DB'
9.78	1" ALUMINUM REVEAL, TYP.
10.81	EXTERIOR SUN CONTROL DEVICE, SEE **20 / A824**
22.03	HIGH-LOW DRINKING FOUNTAIN, SEE PLUMBING, AND **14 / A801**
22.18	GALVANIZED PIPE DOWNSPOUT FROM GUTTER (PAINT), SEE **21 / A824**
32.16	CAST-IN-PLACE CONCRETE BENCH, SEE **5 / A105**
32.72	DECORATIVE METAL FENCING, SEE SITE PLANS
32.85	FRP FLOWER POT

TOILET ACCESSORY SCHEDULE

MARK	DESCRIPTION	MFR.	MODEL NO.	REMARKS
H	SOAP DISPENSER	BOBRICK	B-2111	SURFACE MTD.
L	PAPER TOWEL DISPENSER	BOBRICK	B-262	SURFACE MTD.

EXTERIOR FINISH SCHEDULE

MARK	MATERIAL
1	TYPE 1 FACTORY FORMED STRAIGHT METAL WALL PANEL PROFILE P-9, (REFER TO **2 / A822** & SPEC. SECTION 074213 'FORMED METAL WALL PANELS FOR PANEL PROFILE)
2	SMOOTH FINISH PLASTER COLONADE PILASTER OR WALL
2C	CAST CONCRETE COLUMN BASE AT FREE STANDING COLUMNS, SEE **13 / A821**
3	COLORED TRANSLUSCENT GLAZING PANELS ALUMINUM FRAMES
4	STAINLESS STEEL VERT. ACCENT ELEMENT WITH DIMENSIONAL LETTERS & SIDE COVE LED LIGHTING
5	TYPE 2 FACTORY FORMED CURVED METAL WALL PANELS INSTALLED WITH REPETITIVE PATTERN USING PANEL PROFILES MX 1.0, MX 2.0, AND MX 8.0 PER **24 / A822** (REFER TO SPEC SECTION 074213 'FORMED METAL WALL PANELS' FOR PANEL PROFILES)
6	TYPE 2 FACTORY FORMED STRAIGHT METAL WALL PANELS INSTALLED WITH REPETITIVE PATTERN USING PANEL PROFILES MX 1.0, MX 2.0, AND MX 8.0 PER **24 / A822** (REFER TO SPEC SECTION 074213 'FORMED METAL WALL PANELS' FOR PANEL PROFILES)

KEYPLAN

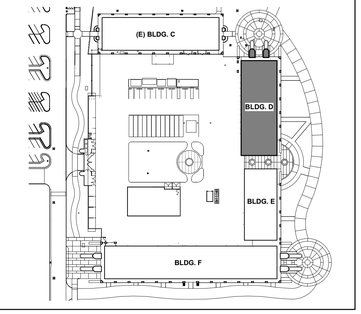

Teter, LLP expressly reserves its common law copyright and other property rights in these plans. This document, the ideas and designs incorporated herein, as an instrument of professional service, is not to be used in whole or in part, for any other project without prior written authorization.

FOR BID ONLY

MARK	DATE	DESCRIPTION
	11/1/2022	DSA RESUBMITTAL

TETER, LLP
ARCHITECTS ENGINEERS CONNECTED
FRESNO HEADQUARTERS
VISALIA | BAKERSFIELD | MODESTO | SAN LUIS OBISPO

TULARE CAMPUS CTE
COLLEGE OF THE SEQUOIAS
4999 E. BARDSLEY AVE.
TULARE, CA

DRAWING TITLE
EXTERIOR ELEVATIONS

PROJECT NO.
21-12032

DRAWING
A300

\\tetr-file1\Users\ryan.odom\Documents\12032-A-COS Tulare CTE_ryan.odomNLB27.rvt
PLOT DATE: 11/1/2022 10:00:09 PM

\\tet-file1\Users\ryan.odom\Documents\12032-A-COS Tulare CTE_ryan.odomNLB27.rvt

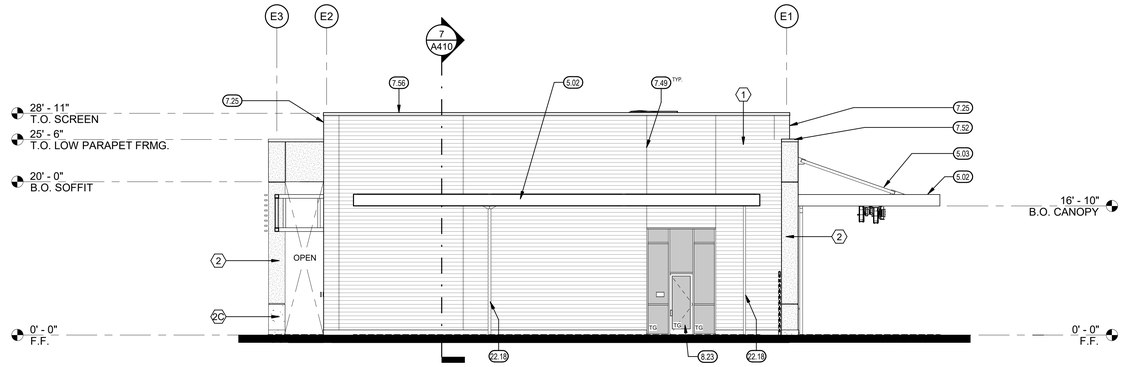

BUILDING E - NORTH — 1/8" = 1'-0" — 7

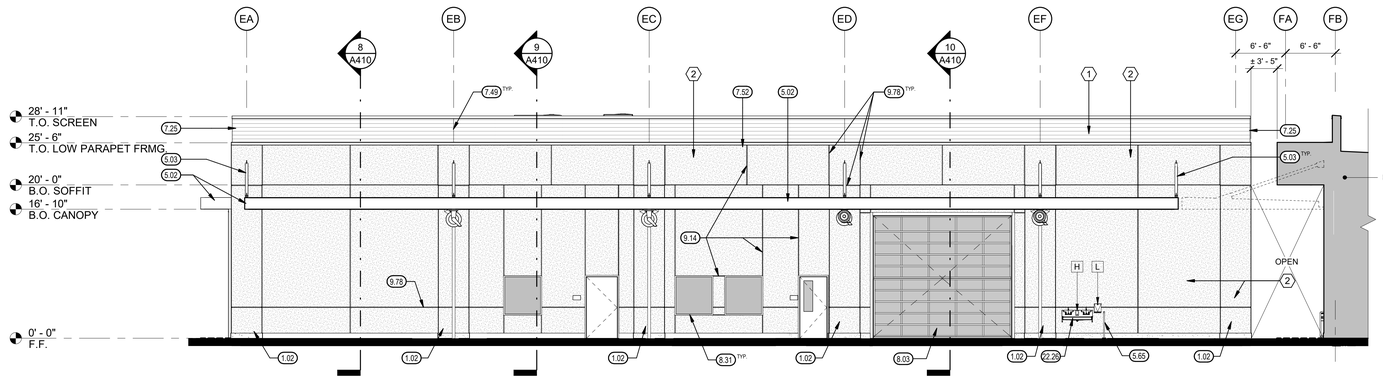

BUILDING E - WEST — 1/8" = 1'-0" — 8

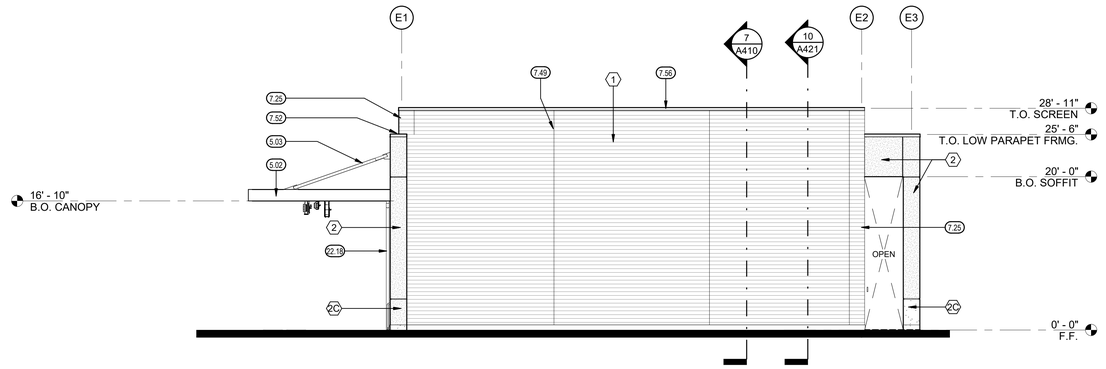

BUILDING E - SOUTH — 1/8" = 1'-0" — 9

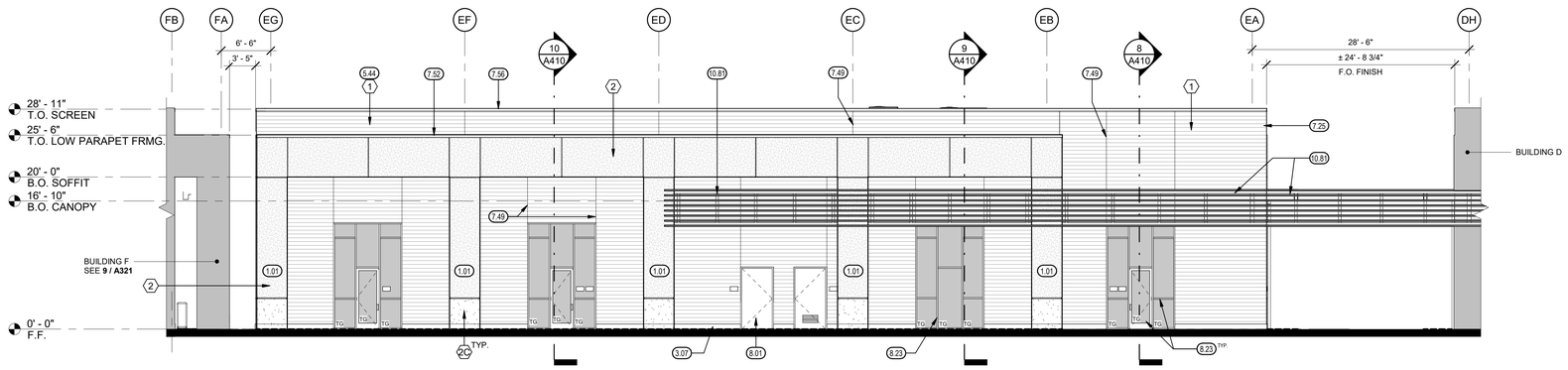

BUILDING E - EAST — 1/8" = 1'-0" — 10

KEYNOTES (00.00)

1.01	CONTINUE FINISHES AT WALL BEYOND HIDDEN BY COLUMNS & OTHER ELEMENTS IN FRONT, TYP.
1.02	PILASTER AT BUILDING WALL
3.07	EXPOSED CONCRETE CURB, SACK FINISH, TYP.
5.02	STEEL CANOPY, PAINT
5.03	STRUCTURAL STEEL BRACES, PAINT
5.44	MECHANICAL SCREEN, STEEL FRAMING AND METAL SIDING, SCREEN HELD ABOVE ROOF SURFACE TO ALLOW FOR DRAINAGE, SEE **2 / A831**
5.65	PIPE GUARD AT DRINKING FOUNTAINS & WASH SINKS, SEE DETAIL **9 / A801**
7.25	FACTORY FABRICATED MITERED METAL PANEL CORNERS, TYP. SEE **15 / A826**
7.49	METAL PANEL BUTT JOINT WITH CONCEALED SPLICE PLATE, TYP.
7.52	SHEET METAL SHELF FLASHING, PAINT
7.56	PRE-FINISHED SHEET METAL CAP TO MATCH WALL SIDING
8.01	DOOR AND FRAME AS SCHEDULED (SIDE LITES WHERE INDICATED)
8.03	VERTICAL BI-FOLD STEEL DOORS WITH GLASS PANELS (FULLY TEMPERED)
8.23	ALUMINUM CURTAIN WALL WINDOWS & ENTRANCE DOORS, SEE SCHEDULES
8.31	WINDOW AS SCHEDULED
9.14	CEMENT PLASTER 'M' EXPANSION SCREED, TYP.
9.78	1" ALUMINUM REVEAL, TYP.
10.81	EXTERIOR SUN CONTROL DEVICE, SEE **20 / A824**
22.18	GALVANIZED PIPE DOWNSPOUT FROM GUTTER (PAINT), SEE **21 / A824**
22.26	ACCESSIBLE HANDWASH SINK, SEE PLUMBING, FOR ACCESSIBLE REQUIREMENTS SEE 9/A801

TOILET ACCESSORY SCHEDULE

MARK	DESCRIPTION	MFR.	MODEL NO.	REMARKS
H	SOAP DISPENSER	BOBRICK	B-2111	SURFACE MTD.
L	PAPER TOWEL DISPENSER	BOBRICK	B-262	SURFACE MTD.

EXTERIOR FINISH SCHEDULE

MARK	MATERIAL
1	TYPE 1 FACTORY FORMED STRAIGHT METAL WALL PANEL PROFILE P-9, (REFER TO **2 / A822** & SPEC. SECTION 074213 'FORMED METAL WALL PANELS FOR PANEL PROFILE)
2	SMOOTH FINISH PLASTER COLONADE PILASTER OR WALL
2C	CAST CONCRETE COLUMN BASE AT FREE STANDING COLUMNS, SEE **13 / A821**
3	COLORED TRANSLUSCENT GLAZING PANELS ALUMINUM FRAMES
4	STAINLESS STEEL VERT. ACCENT ELEMENT WITH DIMENSIONAL LETTERS & SIDE COVE LED LIGHTING
5	TYPE 2 FACTORY FORMED CURVED METAL WALL PANELS INSTALLED WITH REPETITIVE PATTERN USING PANEL PROFILES MX 1.0, MX 2.0, AND MX 8.0 PER **24 / A822** (REFER TO SPEC SECTION 074213 'FORMED METAL WALL PANELS' FOR PANEL PROFILES)
6	TYPE 2 FACTORY FORMED STRAIGHT METAL WALL PANELS INSTALLED WITH REPETITIVE PATTERN USING PANEL PROFILES MX 1.0, MX 2.0, AND MX 8.0 PER **24 / A822** (REFER TO SPEC SECTION 074213 'FORMED METAL WALL PANELS' FOR PANEL PROFILES)

KEYPLAN

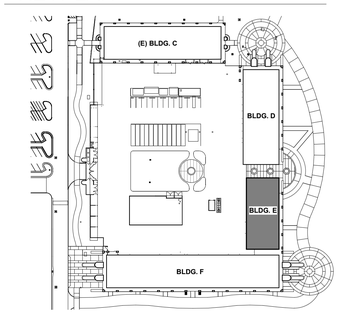

FOR BID ONLY

Teter, LLP expressly reserves its common law copyright and other property rights in these plans. This document, the ideas and designs incorporated herein, as an instrument of professional service, is not to be used in whole or in part, for any other project without prior written authorization.

MARK	DATE	DESCRIPTION
	11/1/2022	DSA RESUBMITTAL

LICENSED ARCHITECT * VINOD KUMAR * No. C-23963 * STATE OF CALIFORNIA

TETER, LLP
ARCHITECTS ENGINEERS CONNECTED
FRESNO HEADQUARTERS
VISALIA | BAKERSFIELD | MODESTO | SAN LUIS OBISPO

TULARE CAMPUS CTE
COLLEGE OF THE SEQUOIAS
4999 E. BARDSLEY AVE.
TULARE, CA

DRAWING TITLE
EXTERIOR ELEVATIONS

PROJECT NO.
21-12032

DRAWING
A310

PLOT DATE: 11/1/2022 10:00:24 PM

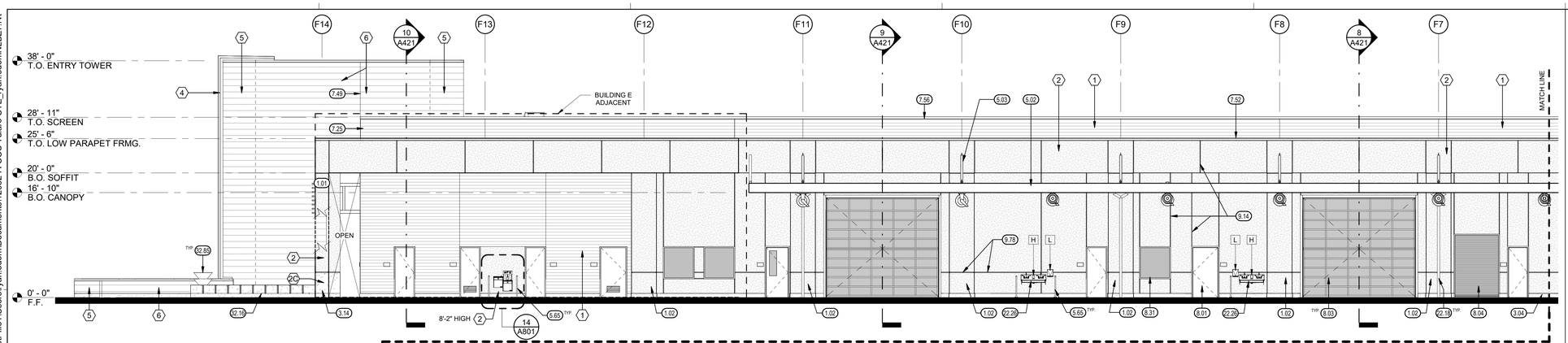

EXTERIOR ELEVATION - BUILDING F NORTH — 1/8" = 1'-0" — 8

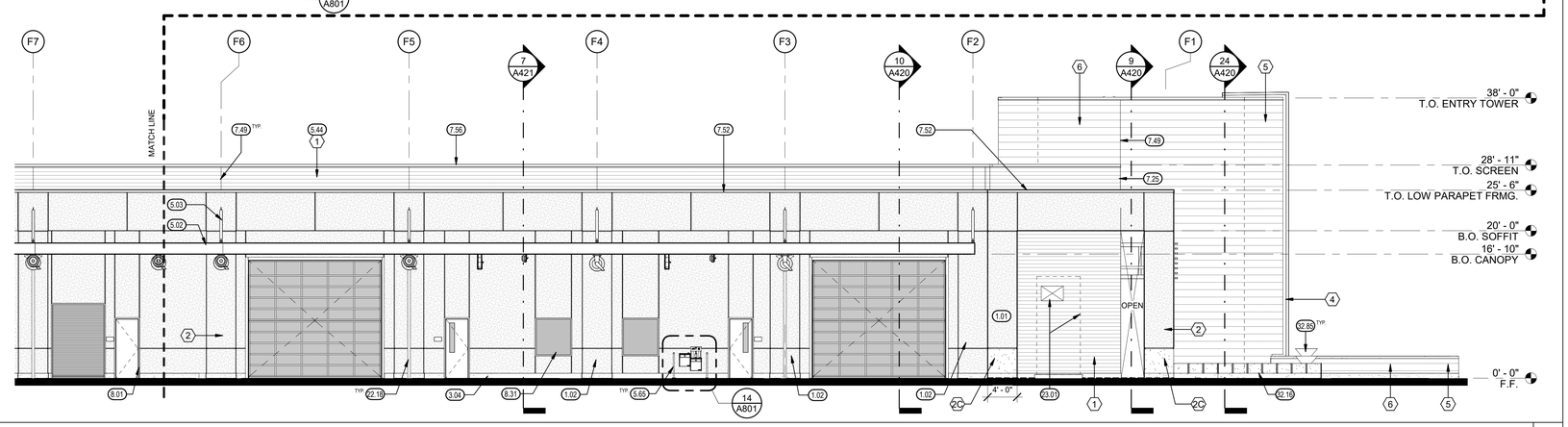

EXTERIOR ELEVATION - BUILDING F WEST (WALL BEYOND) — 1/8" = 1'-0" — 24

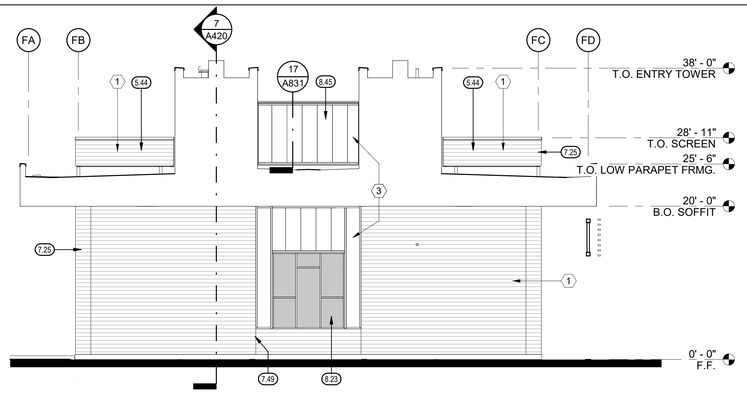

EXTERIOR ELEVATION - BUILDING F WEST — 1/8" = 1'-0" — 9

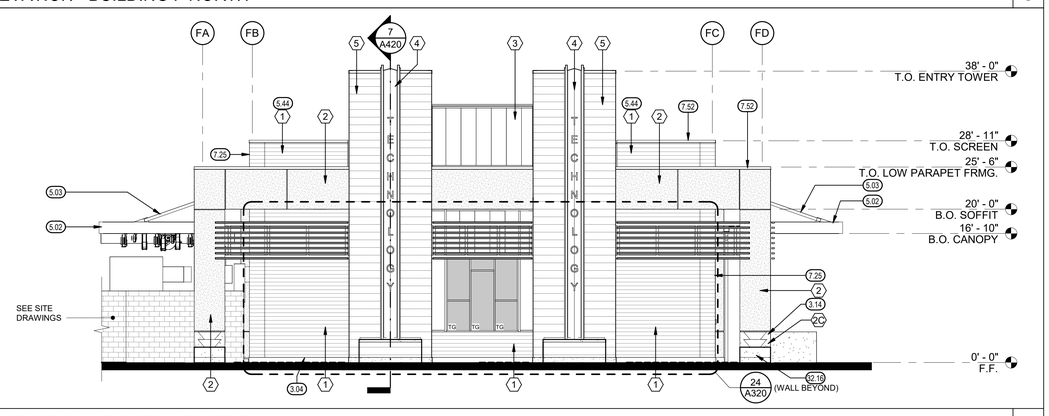

KEYNOTES

1.01	CONTINUE FINISHES AT WALL BEYOND HIDDEN BY COLUMNS & OTHER ELEMENTS IN FRONT, TYP.
1.02	PILASTER AT BUILDING WALL
3.04	8" HIGH CONCRETE CURB, TYP.
3.14	4' HIGH CONCRETE COLUMN BASE/ENCASEMENT, SACK FINISH, SEE 2/A820, 12/A820, AND 13/A821
5.02	STEEL CANOPY, PAINT
5.03	STRUCTURAL STEEL BRACES, PAINT
5.44	MECHANICAL SCREEN, STEEL FRAMING AND METAL SIDING, SCREEN HELD ABOVE ROOF SURFACE TO ALLOW FOR DRAINAGE. SEE
5.65	PIPE GUARD AT DRINKING FOUNTAINS & WASH SINKS, SEE DETAIL **2 / A831**
7.25	FACTORY FABRICATED MITERED METAL PANEL CORNERS, TYP. SEE **15 / A826**
7.49	METAL PANEL BUTT JOINT WITH CONCEALED SPLICE PLATE, TYP.
7.52	SHEET METAL SHELF FLASHING, PAINT
7.56	PRE-FINISHED SHEET METAL CAP TO MATCH WALL SIDING
8.01	DOOR AND FRAME AS SCHEDULED (SIDE LITES WHERE INDICATED)
8.03	VERTICAL BI-FOLD STEEL DOORS WITH GLASS PANELS (FULLY TEMPERED)
8.04	OVERHEAD COILING DOOR & STEEL FRAME
8.23	ALUMINUM CURTAIN WALL WINDOWS & ENTRANCE DOORS, SEE SCHEDULES
8.31	WINDOW AS SCHEDULED
8.45	TRANSLUCENT GLAZING PANEL SCREEN WALL WITH SHEET METAL CAP
9.14	CEMENT PLASTER 'M' EXPANSION SCREED, TYP.
9.78	1" ALUMINUM REVEAL, TYP.
22.18	GALVANIZED PIPE DOWNSPOUT FROM GUTTER (PAINT), SEE **21 / A824**
22.26	ACCESSIBLE HANDWASH SINK, SEE PLUMBING, FOR ACCESSIBLE REQUIREMENTS SEE 9/A801
23.01	HVAC EQUIPMENT, SEE MECH
32.16	CAST-IN-PLACE CONCRETE BENCH, SEE **5 / A105**
32.85	FRP FLOWER POT

TOILET ACCESSORY SCHEDULE

MARK	DESCRIPTION	MFR.	MODEL NO.	REMARKS
H	SOAP DISPENSER	BOBRICK	B-2111	SURFACE MTD.
L	PAPER TOWEL DISPENSER	BOBRICK	B-262	SURFACE MTD.

EXTERIOR FINISH SCHEDULE

MARK	MATERIAL
1	TYPE 1 FACTORY FORMED STRAIGHT METAL WALL PANEL PROFILE P-9, (REFER TO **2 / A822** & SPEC. SECTION 074213 'FORMED METAL WALL PANELS FOR PANEL PROFILE)
2	SMOOTH FINISH PLASTER COLONADE PILASTER OR WALL
2C	CAST CONCRETE COLUMN BASE AT FREE STANDING COLUMNS, SEE **13 / A821**
3	COLORED TRANSLUSCENT GLAZING PANELS ALUMINUM FRAMES
4	STAINLESS STEEL VERT. ACCENT ELEMENT WITH DIMENSIONAL LETTERS & SIDE COVE LED LIGHTING
5	TYPE 2 FACTORY FORMED CURVED METAL WALL PANELS INSTALLED WITH REPETITIVE PATTERN USING PANEL PROFILES MX 1.0, MX 2.0, AND MX 8.0 PER **24 / A822** (REFER TO SPEC SECTION 074213 'FORMED METAL WALL PANELS' FOR PANEL PROFILES)
6	TYPE 2 FACTORY FORMED STRAIGHT METAL WALL PANELS INSTALLED WITH REPETITIVE PATTERN USING PANEL PROFILES MX 1.0, MX 2.0, AND MX 8.0 PER **24 / A822** (REFER TO SPEC SECTION 074213 'FORMED METAL WALL PANELS' FOR PANEL PROFILES)

KEYPLAN

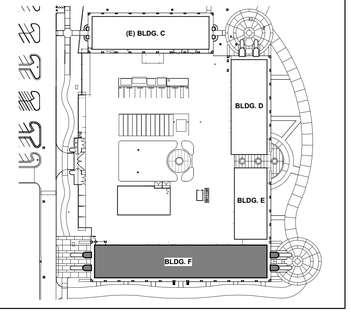

FOR BID ONLY

Teter, LLP expressly reserves its common law copyright and other property rights in these plans. This document, the ideas and designs incorporated herein, as an instrument of professional service, is not to be used in whole or in part, for any other project without prior written authorization.

MARK	DATE	DESCRIPTION
	11/1/2022	DSA RESUBMITTAL

LICENSED ARCHITECT * VINOD TETER * No. 23693 * STATE OF CALIFORNIA

TETER, LLP
FRESNO HEADQUARTERS
VISALIA | BAKERSFIELD | MODESTO | SAN LUIS OBISPO
ARCHITECTS ENGINEERS CONNECTED

TETER

TULARE CAMPUS CTE
COLLEGE OF THE SEQUOIAS
4999 E. BARDSLEY AVE.
TULARE, CA

DRAWING TITLE
EXTERIOR ELEVATIONS

PROJECT NO.
21-12032

DRAWING
A320

\\tetr-file1\Users\ryan.odom\Documents\12032-A-COS Tulare CTE_ryan.odomNLB27.rvt

PLOT DATE: 11/1/2022 10:00:45 PM

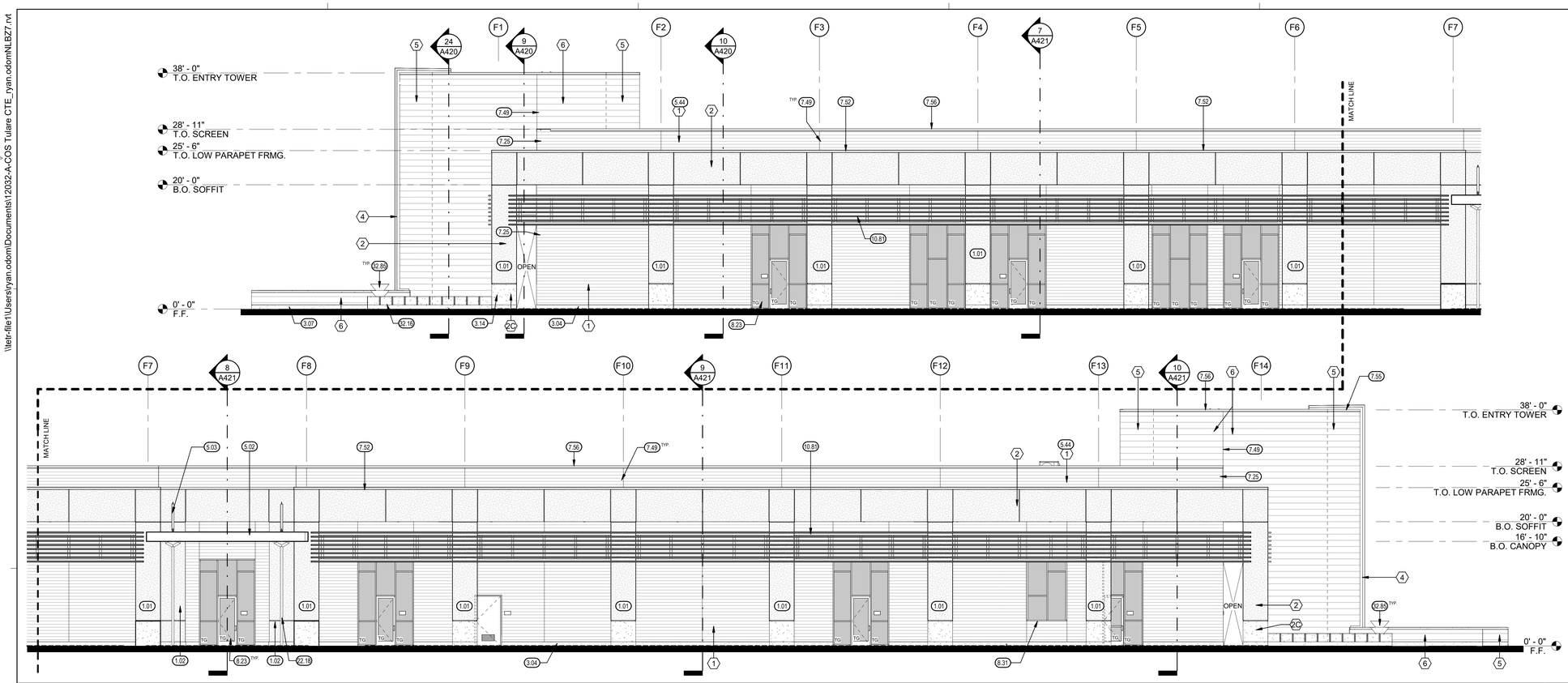

EXTERIOR ELEVATION - BUILDING F SOUTH — 1/8" = 1'-0" | 8

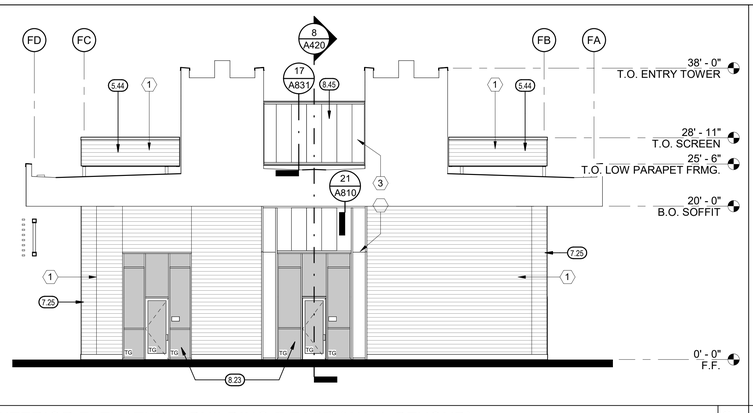

EXTERIOR ELEVATION - BUILDING F EAST (WALL BEYOND) — 1/8" = 1'-0" | 24

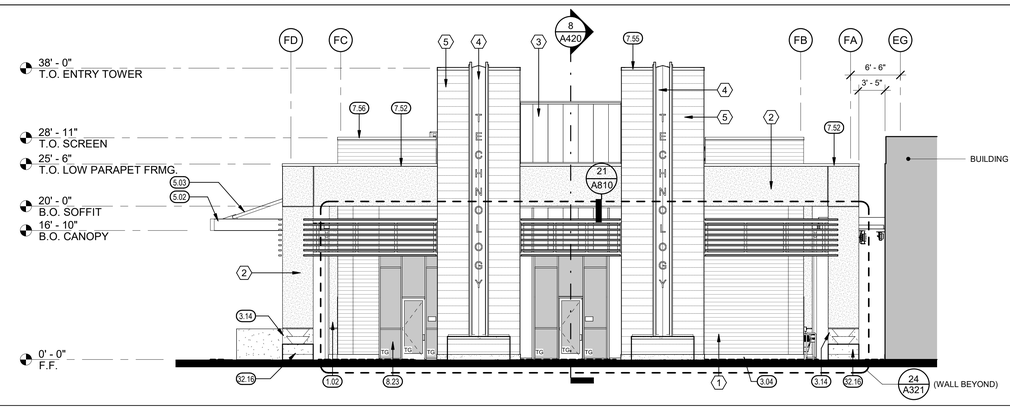

EXTERIOR ELEVATION - BUILDING F EAST — 1/8" = 1'-0" | 9

KEYNOTES

1.01	CONTINUE FINISHES AT WALL BEYOND HIDDEN BY COLUMNS & OTHER ELEMENTS IN FRONT, TYP.
1.02	PILASTER AT BUILDING WALL
3.04	8" HIGH CONCRETE CURB, TYP.
3.07	EXPOSED CONCRETE CURB, SACK FINISH, TYP.
3.14	4' HIGH CONCRETE COLUMN BASE/ENCASEMENT, SACK FINISH, SEE 2/A820, 12/A820, AND 13/A821
5.02	STEEL CANOPY, PAINT
5.03	STRUCTURAL STEEL BRACES, PAINT
5.44	MECHANICAL SCREEN, STEEL FRAMING AND METAL SIDING, SCREEN HELD ABOVE ROOF SURFACE TO ALLOW FOR DRAINAGE, SEE **2 / A831**
7.25	FACTORY FABRICATED MITERED METAL PANEL CORNERS, TYP. SEE **15 / A826**
7.49	METAL PANEL BUTT JOINT WITH CONCEALED SPLICE PLATE, TYP.
7.52	SHEET METAL SHELF FLASHING, PAINT
7.55	PRE-CURVED MTL. CAP FLASHING TO MATCH METAL SIDING
7.56	PRE-FINISHED SHEET METAL CAP TO MATCH WALL SIDING
8.23	ALUMINUM CURTAIN WALL WINDOWS & ENTRANCE DOORS, SEE SCHEDULES
8.31	WINDOW AS SCHEDULED
8.45	TRANSLUCENT GLAZING PANEL SCREEN WALL WITH SHEET METAL CAP
10.81	EXTERIOR SUN CONTROL DEVICE, SEE **20 / A824**
22.18	GALVANIZED PIPE DOWNSPOUT FROM GUTTER (PAINT), SEE **21 / A824**
32.16	CAST-IN-PLACE CONCRETE BENCH, SEE **5 / A105**
32.85	FRP FLOWER POT

EXTERIOR FINISH SCHEDULE

MARK	MATERIAL
1	TYPE 1 FACTORY FORMED STRAIGHT METAL WALL PANEL PROFILE P-9, (REFER TO **2 / A822 &** SPEC. SECTION 074213 'FORMED METAL WALL PANELS FOR PANEL PROFILE)
2	SMOOTH FINISH PLASTER COLONADE PILASTER OR WALL
2C	CAST CONCRETE COLUMN BASE AT FREE STANDING COLUMNS, SEE **13 / A821**
3	COLORED TRANSLUSCENT GLAZING PANELS ALUMINUM FRAMES
4	STAINLESS STEEL VERT. ACCENT ELEMENT WITH DIMENSIONAL LETTERS & SIDE COVE LED LIGHTING
5	TYPE 2 FACTORY FORMED CURVED METAL WALL PANELS INSTALLED WITH REPETITIVE PATTERN USING PANEL PROFILES MX 1.0, MX 2.0, AND MX 8.0 PER **24 / A822** (REFER TO SPEC SECTION 074213 'FORMED METAL WALL PANELS' FOR PANEL PROFILES)
6	TYPE 2 FACTORY FORMED STRAIGHT METAL WALL PANELS INSTALLED WITH REPETITIVE PATTERN USING PANEL PROFILES MX 1.0, MX 2.0, AND MX 8.0 PER **24 / A822** (REFER TO SPEC SECTION 074213 'FORMED METAL WALL PANELS' FOR PANEL PROFILES)

KEYPLAN

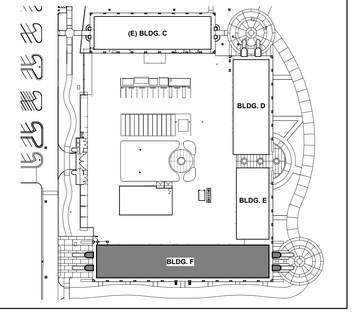

FOR BID ONLY

Teter, LLP expressly reserves its common law copyright and other property rights in these plans. This document, the ideas and designs incorporated herein, as an instrument of professional service, is not to be used in whole or in part, for any other project without prior written authorization.

MARK	DATE	DESCRIPTION
	11/1/2022	DSA RESUBMITTAL

LICENSED ARCHITECT * VINOD KUMAR * No. C 29893 * STATE OF CALIFORNIA

TETER, LLP
FRESNO HEADQUARTERS
VISALIA | BAKERSFIELD | MODESTO | SAN LUIS OBISPO
ARCHITECTS ENGINEERS CONNECTED

TETER

TULARE CAMPUS CTE
COLLEGE OF THE SEQUOIAS
4999 E. BARDSLEY AVE.
TULARE, CA

DRAWING TITLE
EXTERIOR ELEVATIONS

PROJECT NO.
21-12032

DRAWING
A321

PLOT DATE: 11/1/2022 10:01:01 PM

\\tetr-file1\Users\ryan.odom\Documents\12032-A-COS Tulare CTE_ryan.odomNLB27.rvt

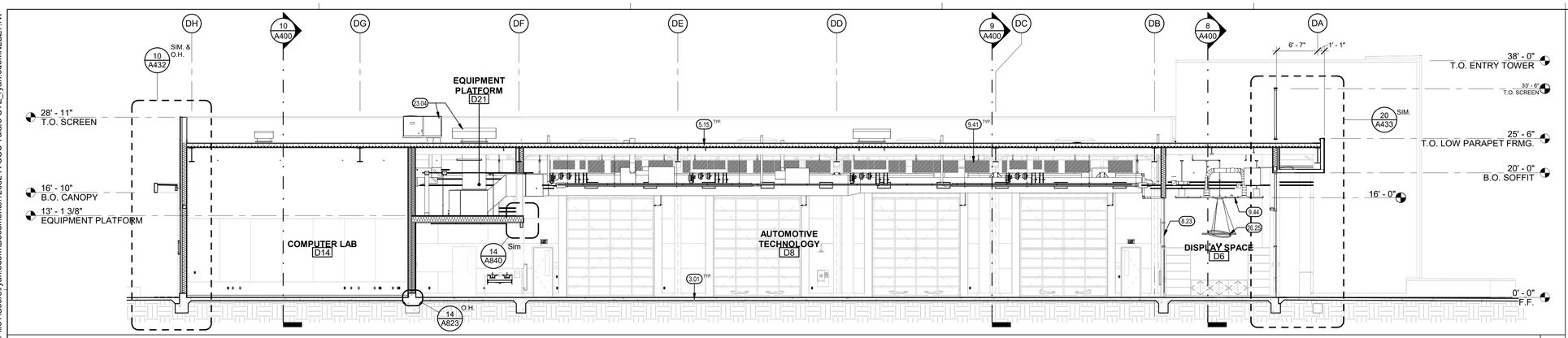

SECTION - BUILDING D — 1/8" = 1'-0" — 7

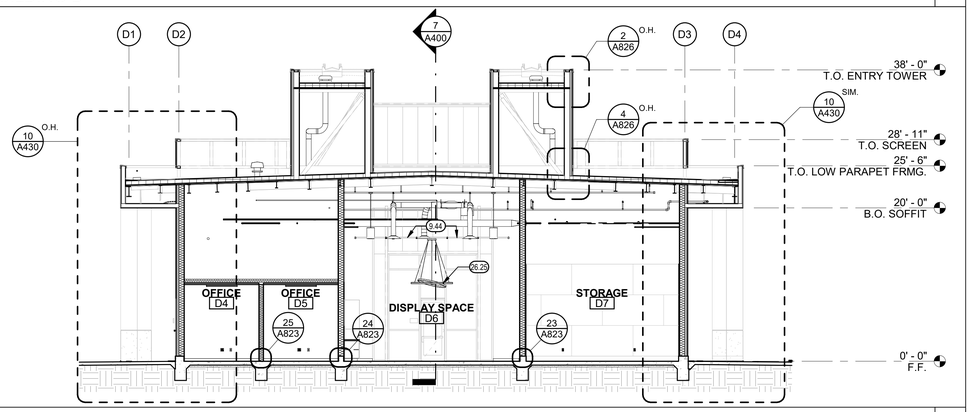

SECTION - BUILDING D — 1/8" = 1'-0" — 8

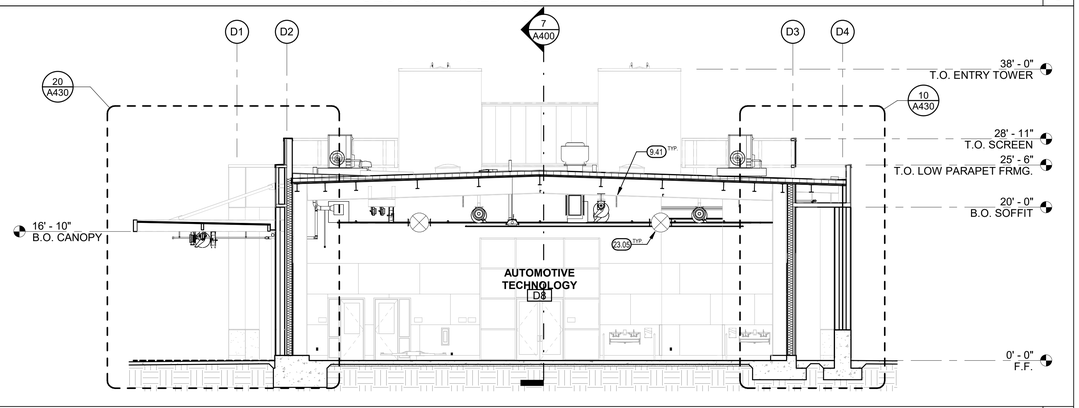

SECTION - BUILDING D — 1/8" = 1'-0" — 9

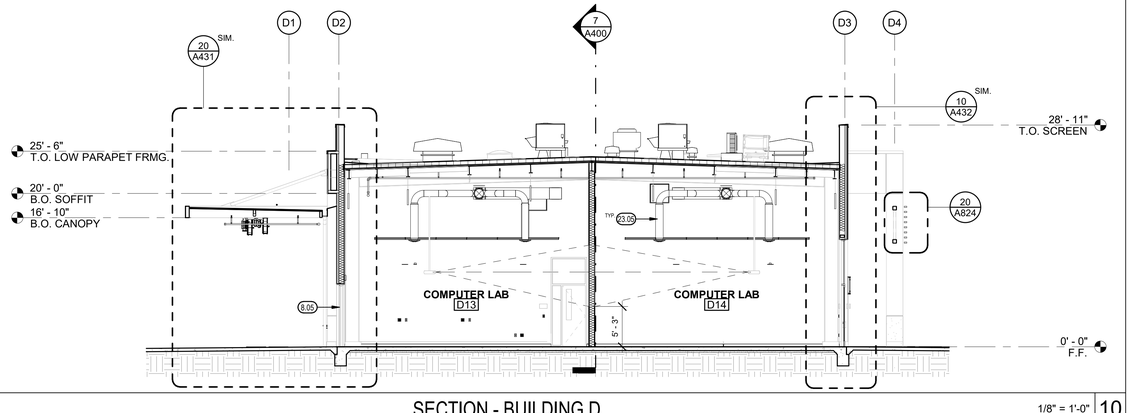

SECTION - BUILDING D — 1/8" = 1'-0" — 10

KEYNOTES (X.XX)

3.01	CONCRETE SLAB, SEE STRUCTURAL
5.15	METAL ROOF DECK, SEE STRUCTURAL
8.05	HOLLOW METAL DOOR AND FRAME PER SCHEDULE
8.23	ALUMINUM CURTAIN WALL WINDOWS & ENTRANCE DOORS, SEE SCHEDULES
9.41	SUSPENDED ACOUSTIC PANEL CEILING, SEE **2 / A841**
9.44	FREE FLOATING SUSPENDED METAL PANEL CEILING, SEE SHEET A842
23.04	MECHANICAL EQUIPMENT, SEE MECHANICAL
23.05	DUCT, SEE MECH, PAINT
26.25	CEILING SUSPENDED LIGHT FIXTURE, SEE ELECTRICAL

GENERAL NOTES

A. SEE STRUCTURAL FOR TOP OF STEEL ELEVATION (T.O.S.).

KEYPLAN

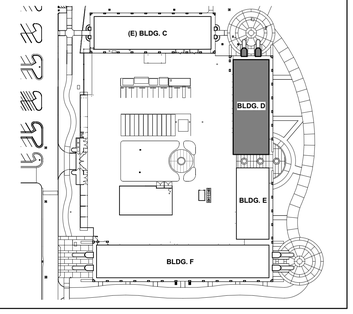

FOR BID ONLY

Teter, LLP expressly reserves its common law copyright and other property rights in these plans. This document, the ideas and designs incorporated herein, as an instrument of professional service, is not to be used in whole or in part, for any other project without prior written authorization.

MARK	DATE	DESCRIPTION
	11/1/2022	DSA RESUBMITTAL

LICENSED ARCHITECT * VINDON J. TEETER * No. C-23893 * STATE OF CALIFORNIA

TETER, LLP
FRESNO HEADQUARTERS
VISALIA | BAKERSFIELD | MODESTO | SAN LUIS OBISPO
ARCHITECTS ENGINEERS CONNECTED

TETER

TULARE CAMPUS CTE
COLLEGE OF THE SEQUOIAS
4999 E. BARDSLEY AVE.
TULARE, CA

DRAWING TITLE
BUILDING SECTIONS - BUILDING D

PROJECT NO.
21-12032

DRAWING
A400

\\tetr-file1\Users\ryan.odom\Documents\12032-A-COS Tulare CTE_ryan.odomNLB27.rvt
PLOT DATE: 11/1/2022 10:01:21 PM

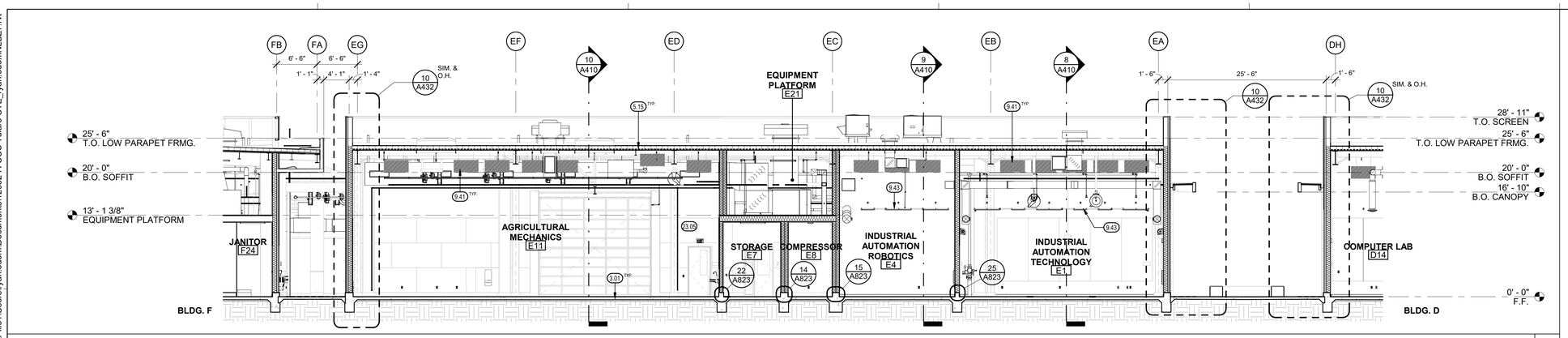

SECTION - BUILDING E 1/8" = 1'-0" 7

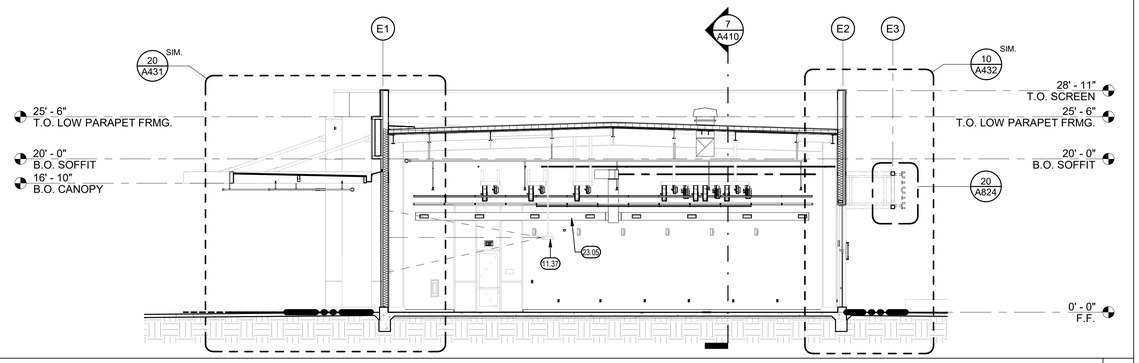

SECTION - BUILDING E 1/8" = 1'-0" 8

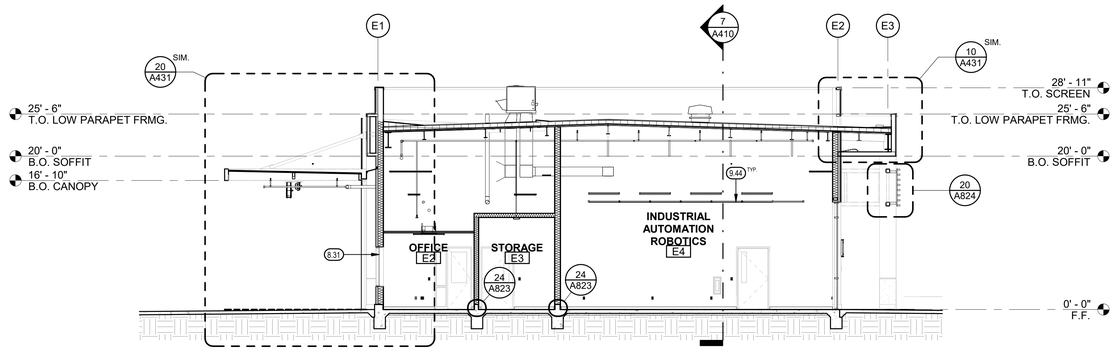

SECTION - BUILDING E 1/8" = 1'-0" 9

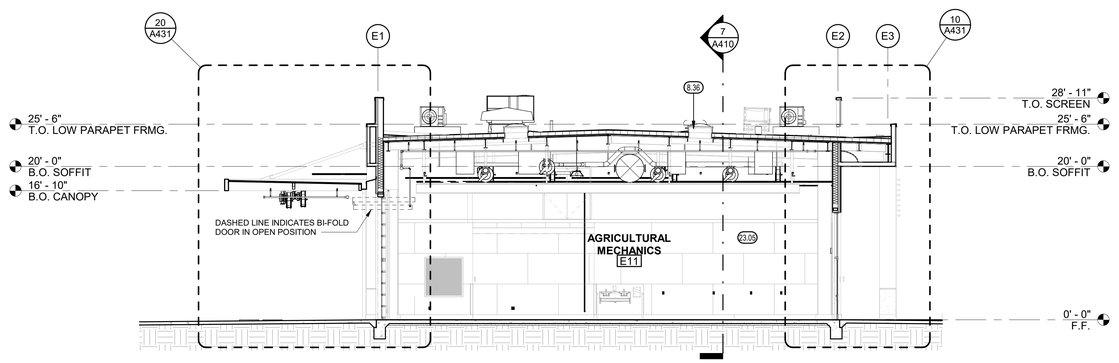

SECTION - BUILDING E 1/8" = 1'-0" 10

KEYNOTES 00.00

3.01	CONCRETE SLAB, SEE STRUCTURAL
5.15	METAL ROOF DECK, SEE STRUCTURAL
8.31	WINDOW AS SCHEDULED
8.36	3' x 6' SKYLIGHT, TYP. SEE **15 / A830** FOR CURB
9.41	SUSPENDED ACOUSTIC PANEL CEILING, SEE **2 / A841**
9.43	LINEAR METAL CEILING, SEE SHEET A842
9.44	FREE FLOATING SUSPENDED METAL PANEL CEILING, SEE SHEET A842
11.37	OVERHEAD PROJECTOR, SEE ELECTRICAL & STRUCTURAL FOR MOUNT
23.05	DUCT, SEE MECH, PAINT

GENERAL NOTES

A. SEE STRUCTURAL FOR TOP OF STEEL ELEVATION (T.O.S.).

KEYPLAN

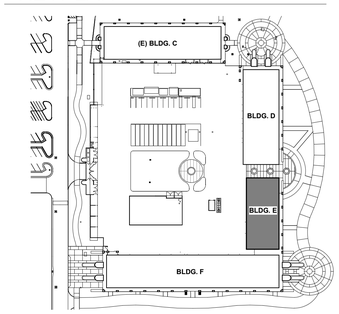

FOR BID ONLY

Teter, LLP expressly reserves its common law copyright and other property rights in these plans. This document, the ideas and designs incorporated herein, as an instrument of professional service, is not to be used in whole or in part, for any other project without prior written authorization.

MARK	DATE	DESCRIPTION
	11/1/2022	DSA RESUBMITTAL

TETER, LLP
FRESNO HEADQUARTERS
VISALIA | BAKERSFIELD | MODESTO | SAN LUIS OBISPO
ARCHITECTS ENGINEERS CONNECTED

TULARE CAMPUS CTE
COLLEGE OF THE SEQUOIAS
4999 E. BARDSLEY AVE.
TULARE, CA

DRAWING TITLE
BUILDING SECTIONS - BUILDING E

PROJECT NO.
21-12032

DRAWING
A410

PLOT DATE: 11/1/2022 10:01:43 PM

\\tetr-file1\Users\ryan.odom\Documents\12032-A-COS Tulare CTE_ryan.odomNLBZ7.rvt

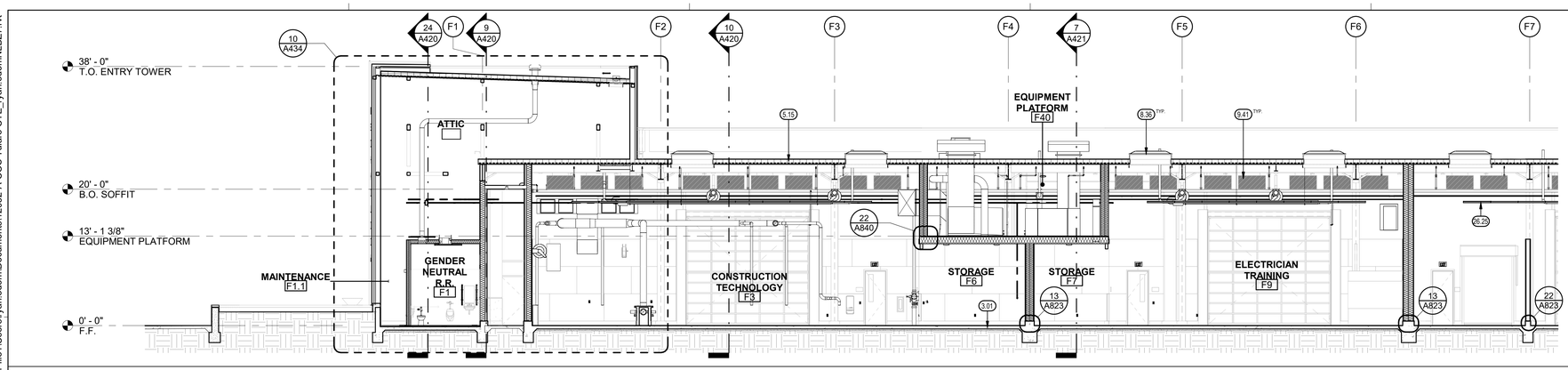

SECTION - BUILDING F1 — 1/8" = 1'-0" — 7

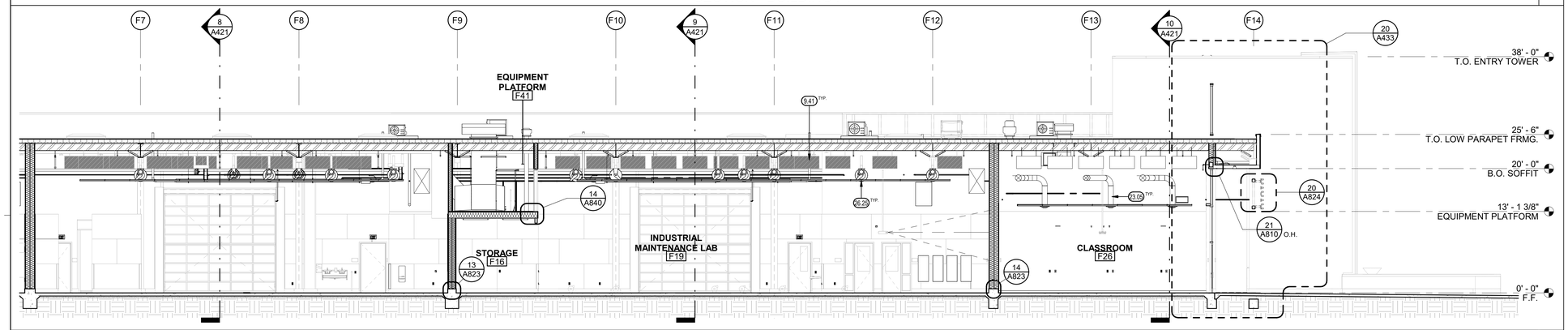

SECTION - BUILDING F2 — 1/8" = 1'-0" — 8

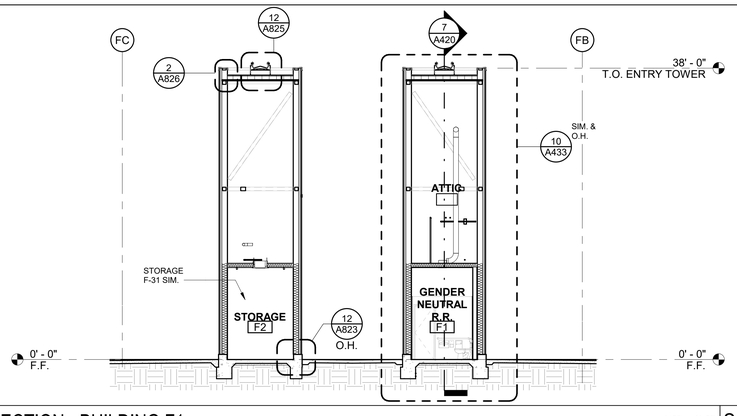

SECTION - BUILDING F1 — 1/8" = 1'-0" — 24

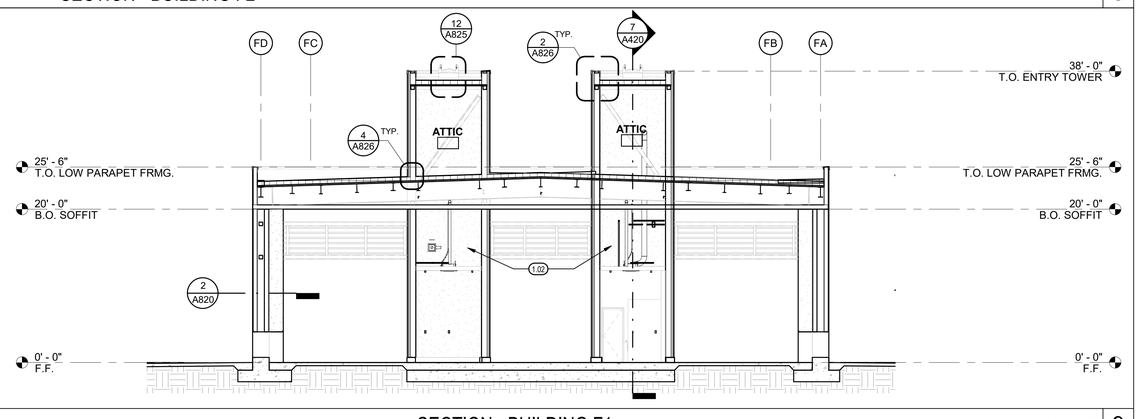

SECTION - BUILDING F1 — 1/8" = 1'-0" — 9

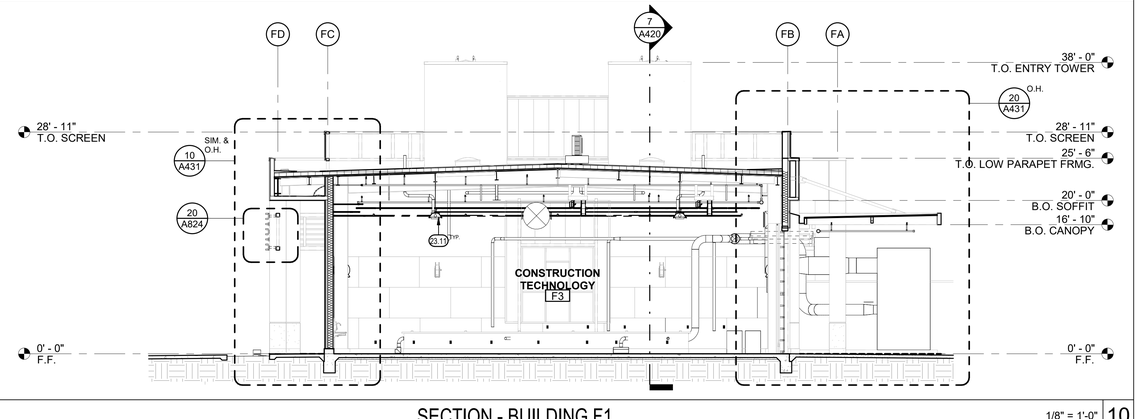

SECTION - BUILDING F1 — 1/8" = 1'-0" — 10

KEYNOTES (00.00)

1.02	PILASTER AT BUILDING WALL
3.01	CONCRETE SLAB, SEE STRUCTURAL
5.15	METAL ROOF DECK, SEE STRUCTURAL
8.36	3' x 6' SKYLIGHT, TYP. SEE **15 / A830** FOR CURB
9.41	SUSPENDED ACOUSTIC PANEL CEILING, SEE **2 / A841**
23.05	DUCT, SEE MECH, PAINT
23.11	INFRARED HEATING SYSTEM, SEE MECHANICAL
26.25	CEILING SUSPENDED LIGHT FIXTURE, SEE ELECTRICAL

GENERAL NOTES

A. SEE STRUCTURAL FOR TOP OF STEEL ELEVATION (T.O.S.).

KEYPLAN

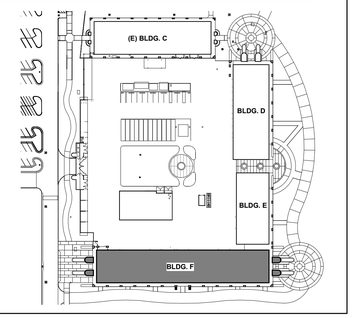

FOR BID ONLY

MARK	DATE	DESCRIPTION
	11/1/2022	DSA RESUBMITTAL

Teter, LLP expressly reserves its common law copyright and other property rights in these plans. This document, the ideas and designs incorporated herein, as an instrument of professional service, is not to be used in whole or in part, for any other project without prior written authorization.

LICENSED ARCHITECT * VINCENT JOHN COUTER * No. C-29823 * STATE OF CALIFORNIA

TETER, LLP
FRESNO HEADQUARTERS
VISALIA | BAKERSFIELD | MODESTO | SAN LUIS OBISPO
ARCHITECTS ENGINEERS CONNECTED

TULARE CAMPUS CTE
COLLEGE OF THE SEQUOIAS
4999 E. BARDSLEY AVE.
TULARE, CA

DRAWING TITLE
BUILDING SECTIONS - BUILDING F

PROJECT NO.
21-12032

DRAWING
A420

PLOT DATE: 11/2/2022 11:00:37 AM
\\tetr-file1\Users\ryan.odom\Documents\12032-A-COS Tulare CTE_ryan.odomNLB27.rvt

\\tet-file1\Users\ryan.odom\Documents\12032-A-COS Tulare CTE_ryan.odomNLB27.rvt

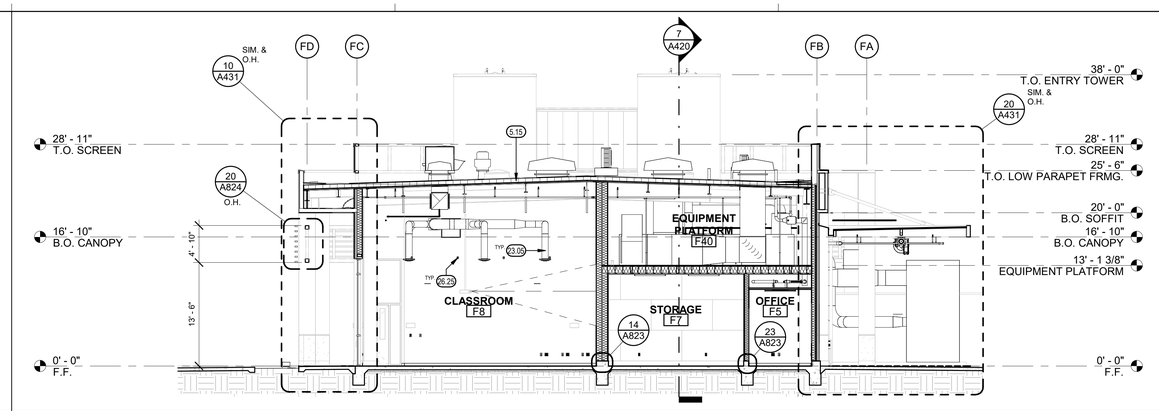

SECTION - BUILDING F2 — 1/8" = 1'-0" — 7

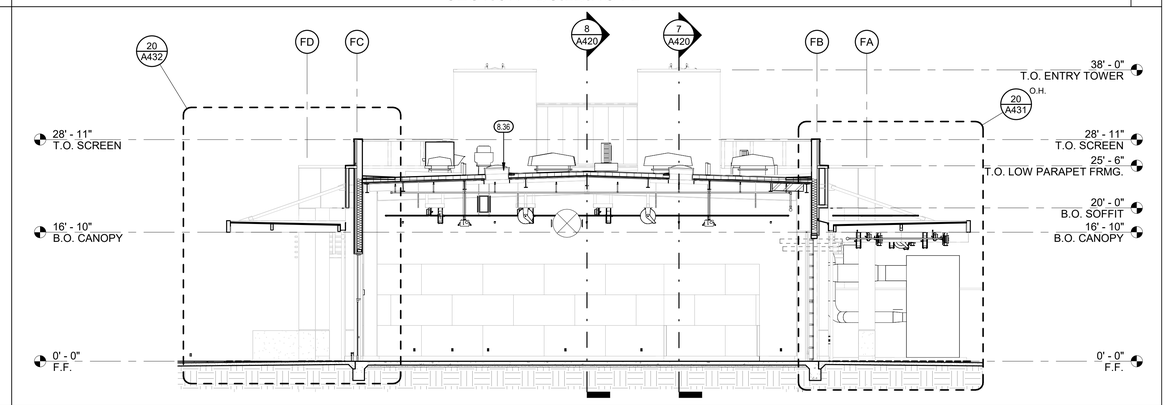

SECTION - BUILDING F2 — 1/8" = 1'-0" — 8

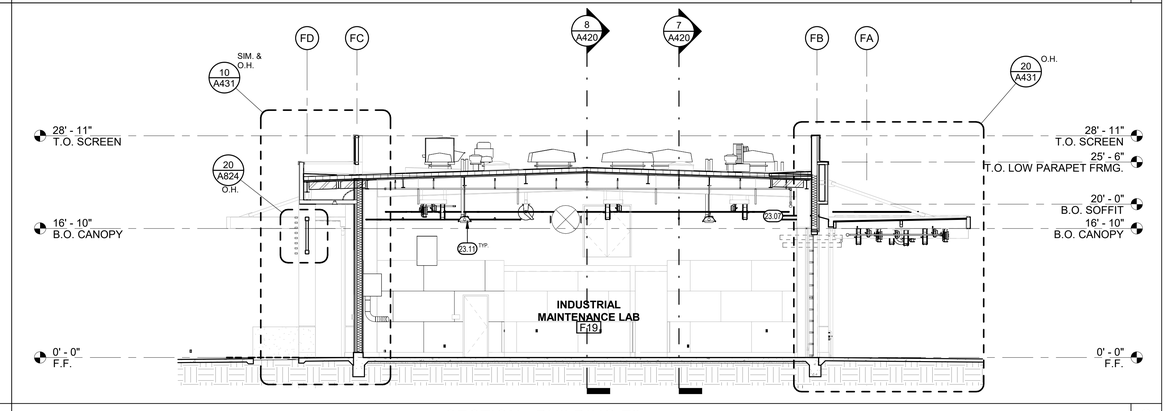

SECTION - BUILDING F2 — 1/8" = 1'-0" — 9

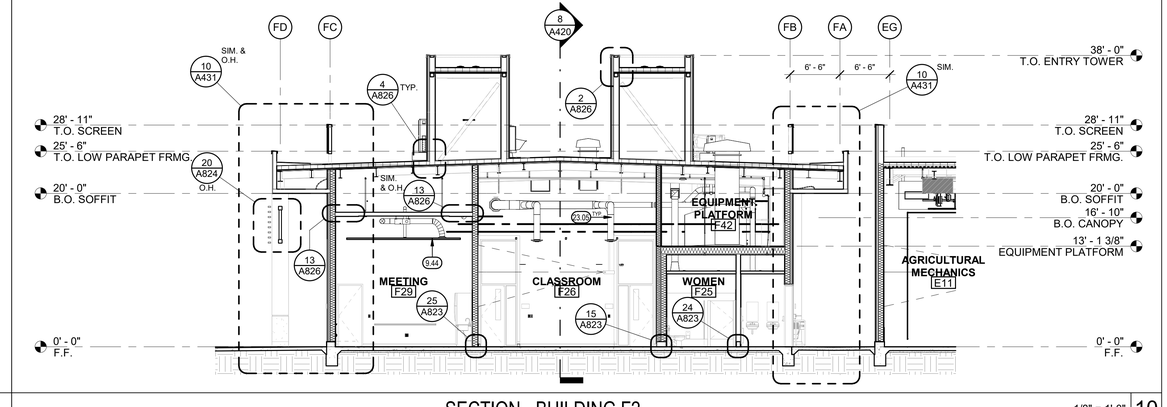

SECTION - BUILDING F2 — 1/8" = 1'-0" — 10

KEYNOTES (KEY.00)

5.15	METAL ROOF DECK, SEE STRUCTURAL
8.36	3' x 6' SKYLIGHT, TYP. SEE **15 / A830** FOR CURB
9.44	FREE FLOATING SUSPENDED METAL PANEL CEILING, SEE SHEET A842
23.05	DUCT, SEE MECH, PAINT
23.07	EXHAUST DUCTS, SEEL MECHANICAL
23.11	INFRARED HEATING SYSTEM, SEE MECHANICAL
26.25	CEILING SUSPENDED LIGHT FIXTURE, SEE ELECTRICAL

GENERAL NOTES

A. SEE STRUCTURAL FOR TOP OF STEEL ELEVATION (T.O.S.).

KEYPLAN

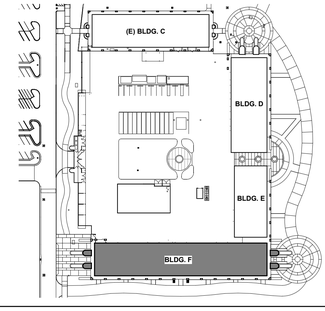

Teter, LLP expressly reserves its common law copyright and other property rights in these plans. This document, the ideas and designs incorporated herein, as an instrument of professional service, is not to be used in whole or in part, for any other project without prior written authorization.

FOR BID ONLY

MARK	DATE	DESCRIPTION
	11/1/2022	DSA RESUBMITTAL

LICENSED ARCHITECT * VINOD KUMAR GOYAL * No. C-29893 * STATE OF CALIFORNIA

TETER, LLP
ARCHITECTS ENGINEERS CONNECTED
FRESNO HEADQUARTERS
VISALIA | BAKERSFIELD | MODESTO | SAN LUIS OBISPO

TULARE CAMPUS CTE
COLLEGE OF THE SEQUOIAS
4999 E. BARDSLEY AVE.
TULARE, CA

DRAWING TITLE
BUILDING SECTIONS - BUILDING F

PROJECT NO.
21-12032

DRAWING
A421

PLOT DATE: 11/2/2022 11:45:31 AM

\\tetr-file1\Users\ryan.odom\Documents\12032-A-COS Tulare CTE_ryan.odomNLB27.rvt

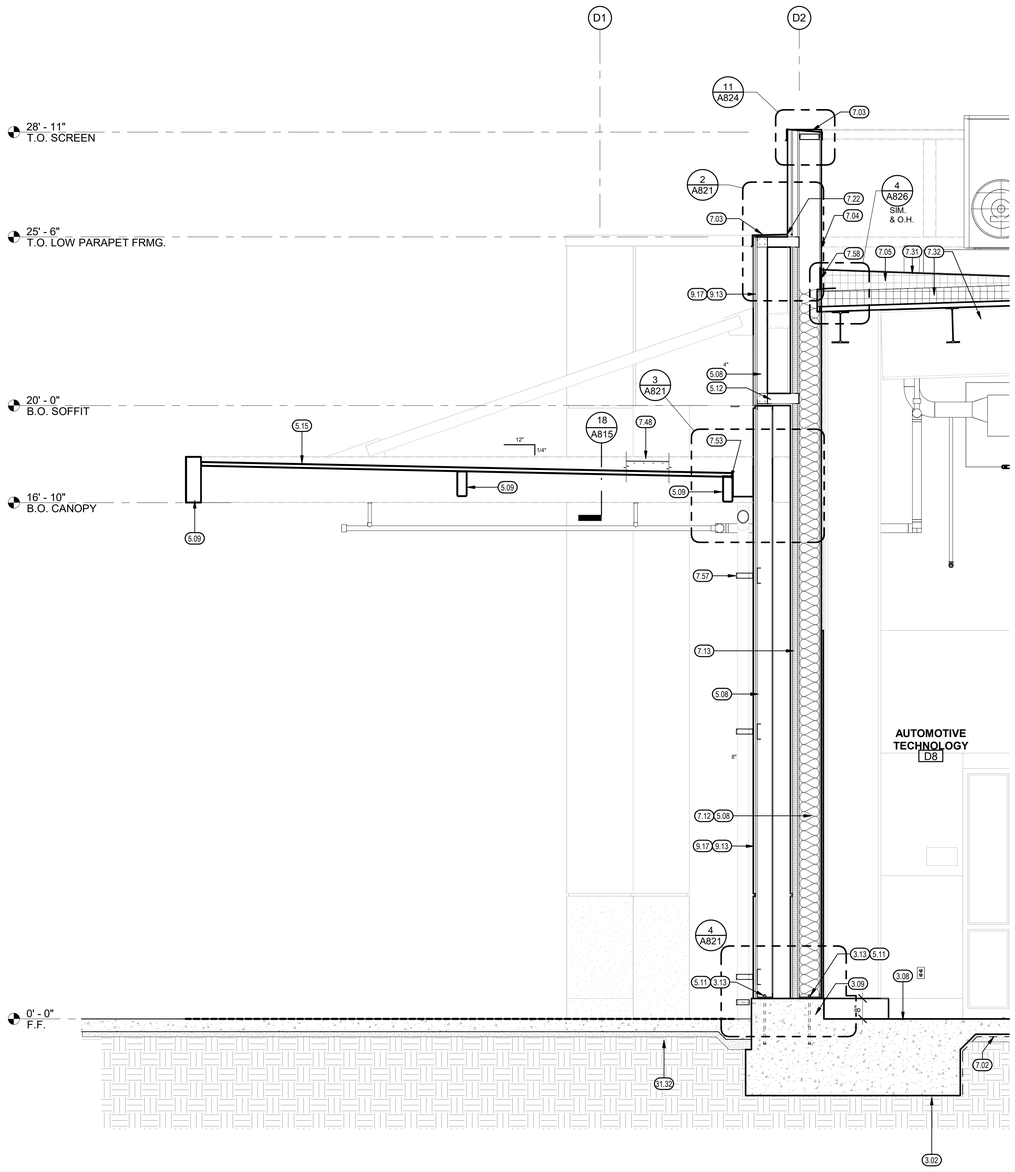

WALL SECTION - BUILDING D

1/2" = 1'-0"

20

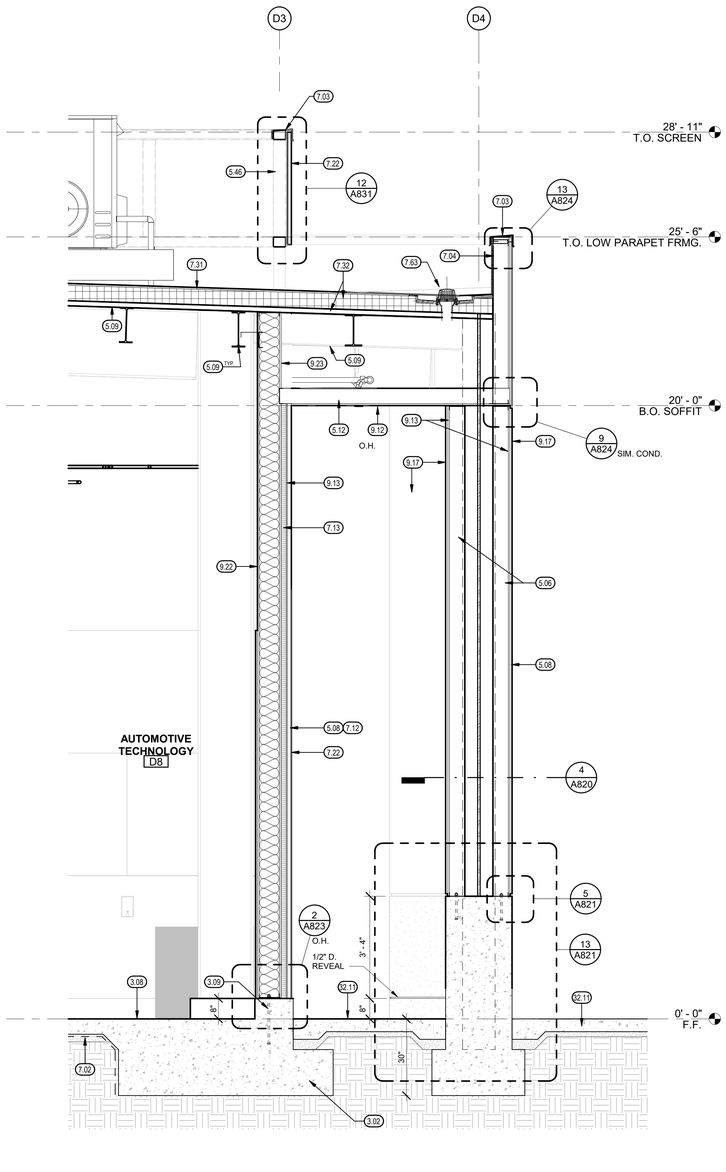

WALL SECTION - BUILDING D

1/2" = 1'-0"

10

KEYNOTES (00.00)

3.02	CONCRETE FOOTING, SEE STRUCTURAL
3.08	INTERIOR CONCRETE SLAB OVER VAPOR BARRIER, SEE STRUCTURAL
3.09	CONCRETE CURB POURED AND FINISHED INTEGRAL WITH CONCRETE SLAB
3.13	CONCRETE ANCHORS, SEE STRUCTURAL
5.06	STRUCTURAL STEEL COLUMN, TYP. SEE STRUCTURAL
5.08	6" METAL STUDS (OR OTHER SIZE INDICATED), SEE STRUCTURAL
5.09	ROOF FRAMING, SEE STRUCTURAL
5.11	METAL SILL TRACK SET IN CONTINUOUS SEALANT, SEE STRUCTURAL
5.12	METAL SOFFIT/CEILING FRAMING AT 16" O.C. (SEE 3/A840)
5.15	METAL ROOF DECK, SEE STRUCTURAL
5.46	SCREEN WALL STEEL SUPPORT FRAMING, SEE STRUCTURAL
7.02	VAPOR BARRIER
7.03	MIN. 24 GA. SHEET METAL CAP/SILL FLASHING (PAINT) SLOPED 1/2":12" MIN.
7.04	SINGLE PLY ROOFING MEMBRANE OVER COVER BOARD OVER 5/8" GLASS MATT GYP. SHEATHING, CARRY MEMBRANE UP AND OVER TOP OF PARAPET AND DOWN ONTO ROOF SURFACE 12" MIN., TYP.
7.05	RIGID INSULATION SLOPED CRICKET BY ROOFING CONTRACTOR W/MIN. 1/4" PER FOOT SLOPE TOWARD DRAIN
7.12	FIBER GLASS BATT INSULATION (R-21 OR AS INDICATED)
7.13	2" RIGID WALL INSULATION
7.22	TYPE 1 HORIZONTALE METAL SIDING OVER VERTICAL BATTEN SYSTEM
7.31	SINGLE PLY MEMBRANE ROOFING SYSTEM OVER COVERBOARD
7.32	MIN. 6" RIGID INSULATION (BY ROOFING CONTRACTOR) AND METAL ROOF DECK, SEE STRUCTURAL
7.48	FLASHING AT 3 EDGES PER BAY, TYP.
7.53	16 GA. STAINLESS STEEL GUTTER, WELD ALL SEAMS WATER TIGHT. KEEP ENDS +/- 3/4" AWAY FROM CROSS SUPPORT BEAMS (FLASH WATER TIGHT)
7.57	GALV. PIPE DOWNSPOUT & BRACKET, SEE PLUMBING & DETAIL **21 / A824**
7.58	8"x6" 24 GAUGE L-FLASHING
7.63	ROOF DRAINS SET IN RECESSED SUMP, SEE PLUMBING AND DETAILS **1 / A830** AND **2 / A830**
9.12	3/4" EXTERIOR 3 COAT PLASTER SYSTEM WITH ACRYLIC COATING OVER HI-RIB METAL LATH
9.13	5/8" EXTERIOR GYPSUM SHEATHING AND WEATHER BARRIER
9.17	7/8" EXTERIOR 3-COAT PLASTER SYSTEM WITH ACRYLIC COATING
9.22	GYPSUM BOARD
9.23	5/8" GYPSUM SHEATHING TYP.OVER RIGID INSULATION AT CONCEALED SPACES
31.32	SAND/AGGREGATE BASE PER SOILS REPORT, SEE CIVIL AND STRUCTURAL
32.11	CONCRETE PAVING/WALK, SLOPE TO DRAIN AWAY FROM BUILDING, SEE CIVIL

GENERAL NOTES

A. SEE STRUCTURAL FOR TOP OF STEEL ELEVATION (T.O.S.).

KEYPLAN

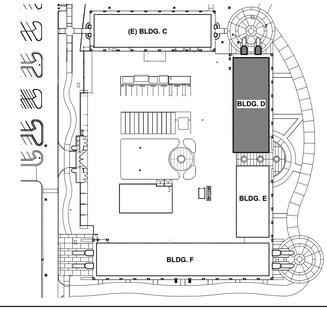

FOR BID ONLY

Teter, LLP expressly reserves its common law copyright and other property rights in these plans. This document, the ideas and designs incorporated herein, as an instrument of professional service, is not to be used in whole or part, for any other project without prior written authorization.

MARK	DATE	DESCRIPTION
	11/1/2022	DSA RESUBMITTAL

TETER, LLP
FRESNO HEADQUARTERS
VISALIA | BAKERSFIELD | MODESTO | SAN LUIS OBISPO
ARCHITECTS ENGINEERS CONNECTED

TULARE CAMPUS CTE
COLLEGE OF THE SEQUOIAS
4999 E. BARDSLEY AVE.
TULARE, CA

DRAWING TITLE
WALL SECTIONS

PROJECT NO.
21-12032

DRAWING
A430

PLOT DATE: 11/1/2022 10:02:31 PM

\\tetr-file1\Users\ryan.odom\Documents\12032-A-COS Tulare CTE_ryan.odomNLB27.rvt

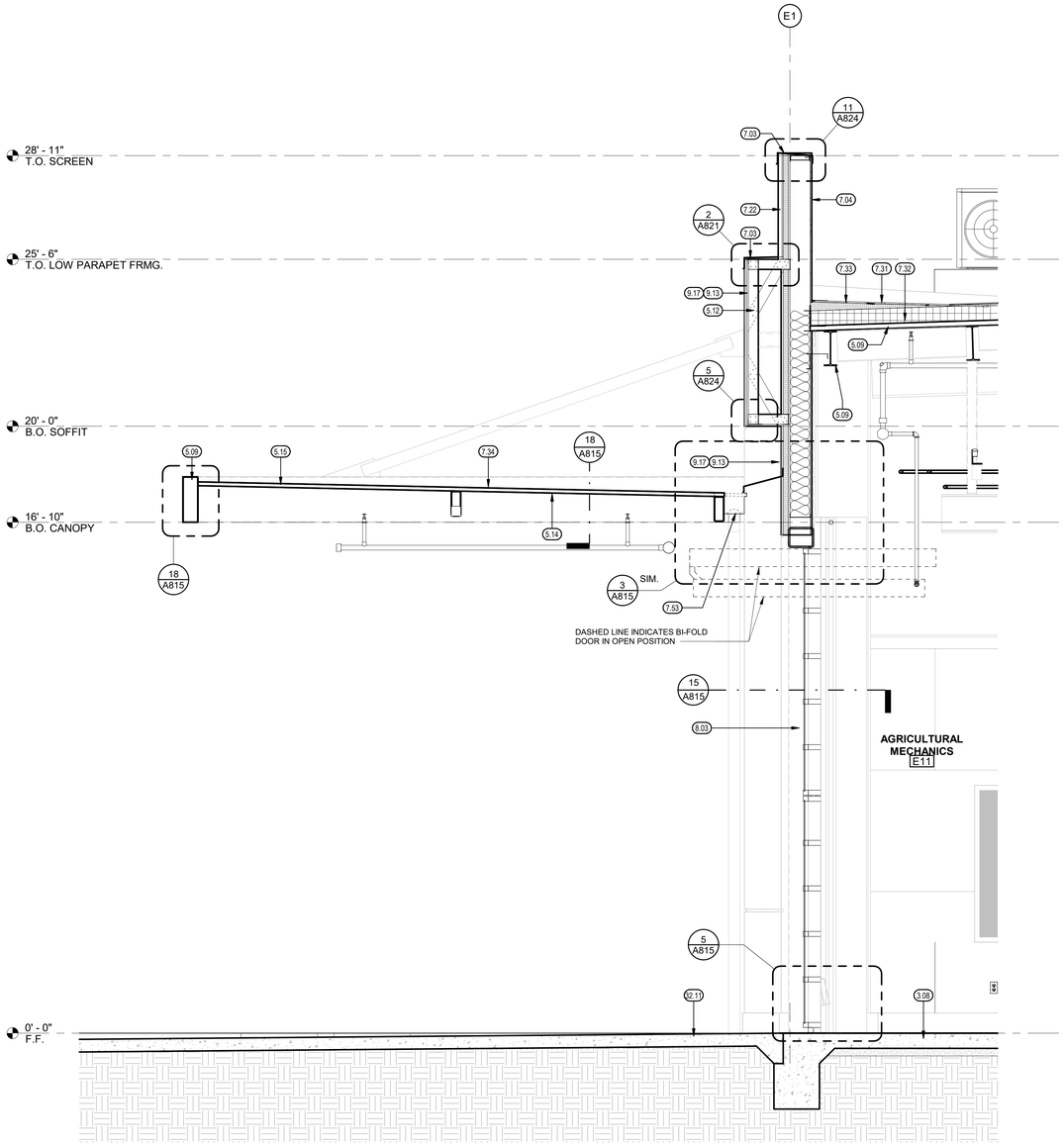

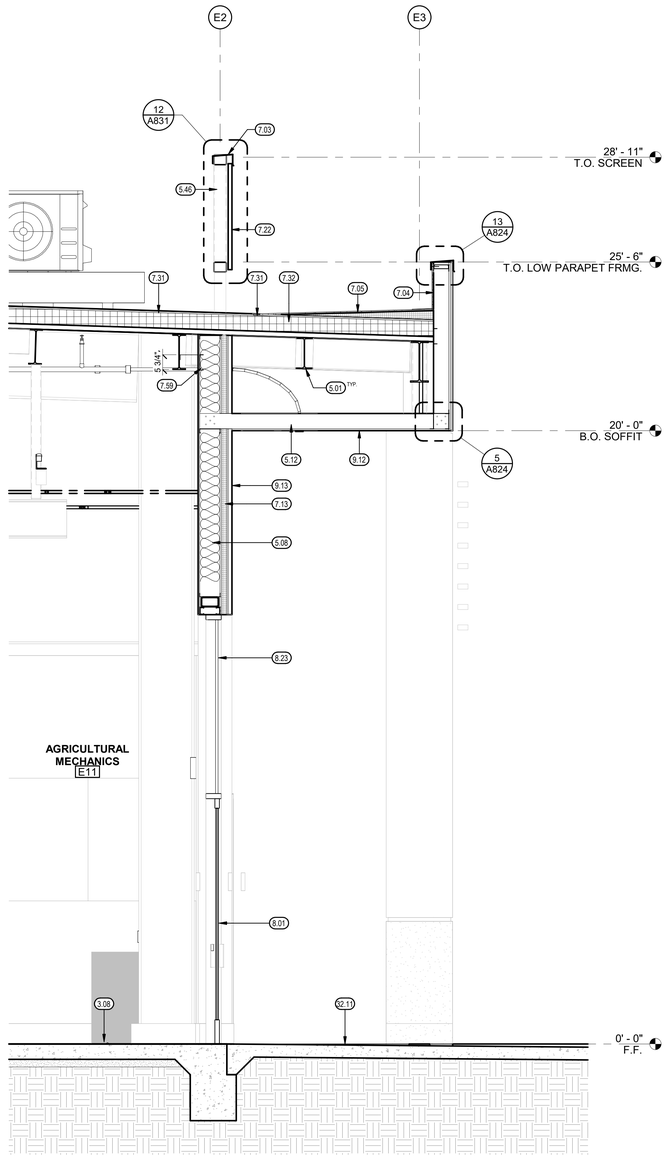

KEYNOTES (00.00)

3.08	INTERIOR CONCRETE SLAB OVER VAPOR BARRIER, SEE STRUCTURAL
5.01	STRUCTURAL STEEL FRAMING, SEE STRUCTURAL
5.08	6" METAL STUDS (OR OTHER SIZE INDICATED), SEE STRUCTURAL
5.09	ROOF FRAMING, SEE STRUCTURAL
5.12	METAL SOFFIT/CEILING FRAMING AT 16" O.C. (SEE 3/A840)
5.14	ROOF CANOPY METAL DECK, SEE STRUCTURAL
5.15	METAL ROOF DECK, SEE STRUCTURAL
5.46	SCREEN WALL STEEL SUPPORT FRAMING, SEE STRUCTURAL
7.03	MIN. 24 GA. SHEET METAL CAP/SILL FLASHING (PAINT) SLOPED 1/2":12" MIN.
7.04	SINGLE PLY ROOFING MEMBRANE OVER COVER BOARD OVER 5/8" GLASS MATT GYP. SHEATHING. CARRY MEMBRANE UP AND OVER TOP OF PARAPET AND DOWN ONTO ROOF SURFACE 12" MIN., TYP.
7.05	RIGID INSULATION SLOPED CRICKET BY ROOFING CONTRACTOR W/MIN. 1/4" PER FOOT SLOPE TOWARD DRAIN
7.13	2" RIGID WALL INSULATION
7.22	TYPE 1 HORIZONTALE METAL SIDING OVER VERTICAL BATTEN SYSTEM
7.31	SINGLE PLY MEMBRANE ROOFING SYSTEM OVER COVERBOARD
7.32	MIN. 6" RIGID INSULATION (BY ROOFING CONTRACTOR) AND METAL ROOF DECK, SEE STRUCTURAL
7.33	CRICKET, TAPERED INSULATION
7.34	APPLY RUBBERIZED COATING TO TOP OF METAL DECK AND SIDE OF PERIMETER BEAMS FOR WATER-TIGHT SEAL
7.53	16 GA. STAINLESS STEEL GUTTER, WELD ALL SEAMS WATER TIGHT. KEEP ENDS +/- 3/4" AWAY FROM CROSS SUPPORT BEAMS (FLASH WATER TIGHT)
7.59	18 GAUGE G.I. CLOSURE STRIP SIZED AS REQUIRED (PAINT) w/ 6" VERT. LETG & 2-#10 S.M. SCREWS TO STUDS @16" o.c. MAX.
8.01	DOOR AND FRAME AS SCHEDULED (SIDE LITES WHERE INDICATED)
8.03	VERTICAL BI-FOLD STEEL DOORS WITH GLASS PANELS (FULLY TEMPERED)
8.23	ALUMINUM CURTAIN WALL WINDOWS & ENTRANCE DOORS, SEE SCHEDULES
9.12	3/4" EXTERIOR 3 COAT PLASTER SYSTEM WITH ACRYLIC COATING OVER HI-RIB METAL LATH
9.13	5/8" EXTERIOR GYPSUM SHEATHING AND WEATHER BARRIER
9.17	7/8" EXTERIOR 3-COAT PLASTER SYSTEM WITH ACRYLIC COATING
32.11	CONCRETE PAVING/WALK, SLOPE TO DRAIN AWAY FROM BUILDING, SEE CIVIL

GENERAL NOTES

A. SEE STRUCTURAL FOR TOP OF STEEL ELEVATION (T.O.S.).

KEYPLAN

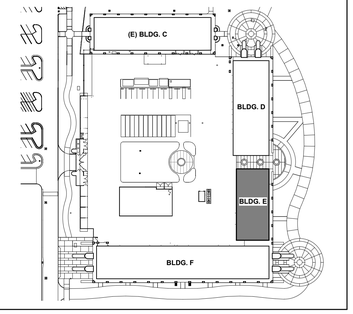

WALL SECTION - BUILDING E 1/2" = 1'-0" 20

WALL SECTION - BUILDING E 1/2" = 1'-0" 10

FOR BID ONLY

Teter, LLP expressly reserves its common law copyright and other property rights in these plans. This document, the ideas and designs incorporated herein, as an instrument of professional service, is not to be used in whole or in part, for any other project without our written authorization.

MARK	DATE	DESCRIPTION
	11/1/2022	DSA RESUBMITTAL

LICENSED ARCHITECT * VINOD KUMAR GUPTA * No. C-23693 * STATE OF CALIFORNIA

TETER, LLP
FRESNO HEADQUARTERS
VISALIA | BAKERSFIELD | MODESTO | SAN LUIS OBISPO
ARCHITECTS ENGINEERS CONNECTED

TETER

TULARE CAMPUS CTE
COLLEGE OF THE SEQUOIAS
4999 E. BARDSLEY AVE.
TULARE, CA

DRAWING TITLE
WALL SECTIONS

PROJECT NO.
21-12032

DRAWING
A431

PLOT DATE: 11/1/2022 10:02:39 PM

\\tetr-file1\Users\ryan.odom\Documents\12032-A-COS Tulare CTE_ryan.odomNLB27.rvt

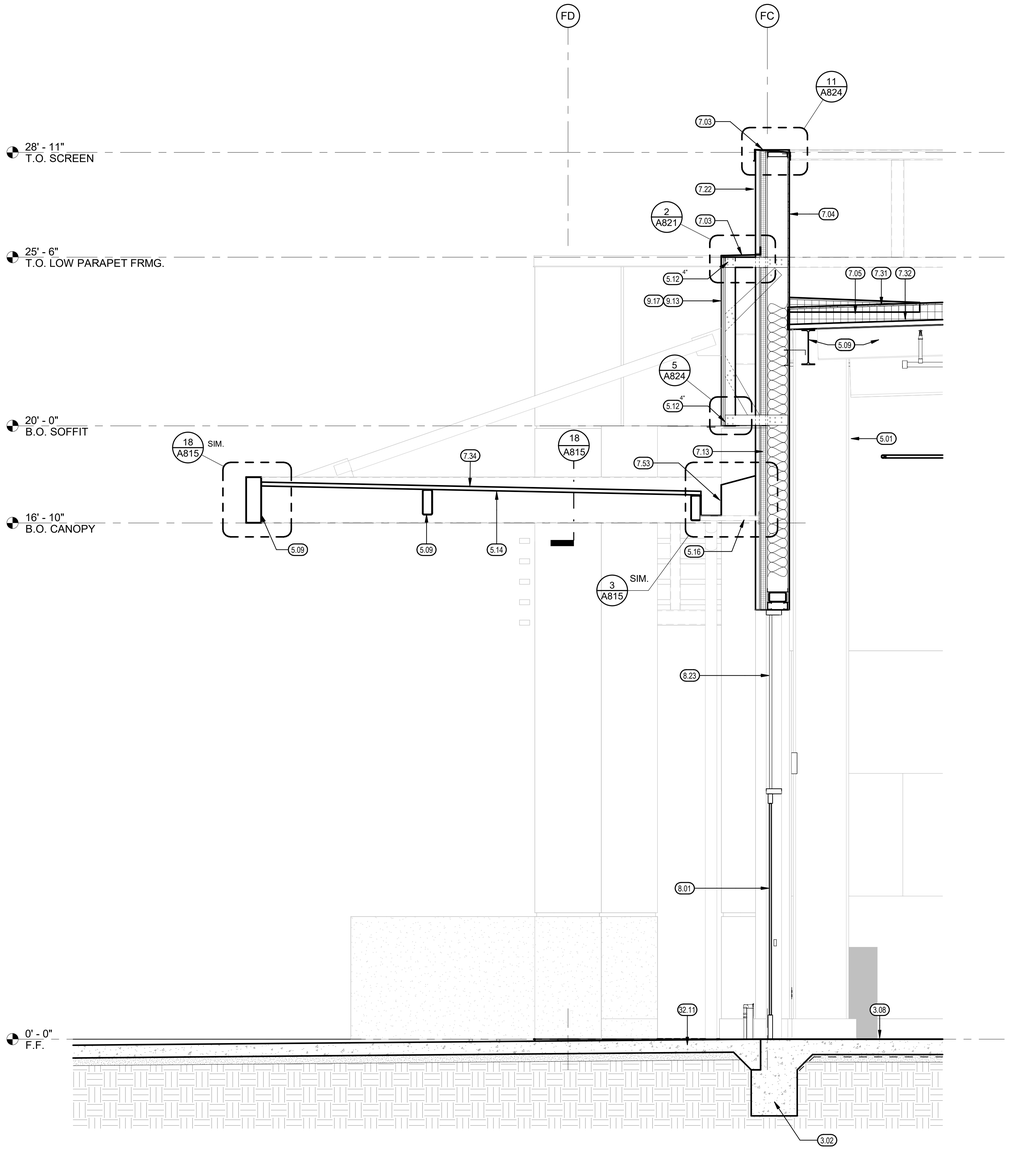

WALL SECTION - BUILDING F 1/2" = 1'-0" 20

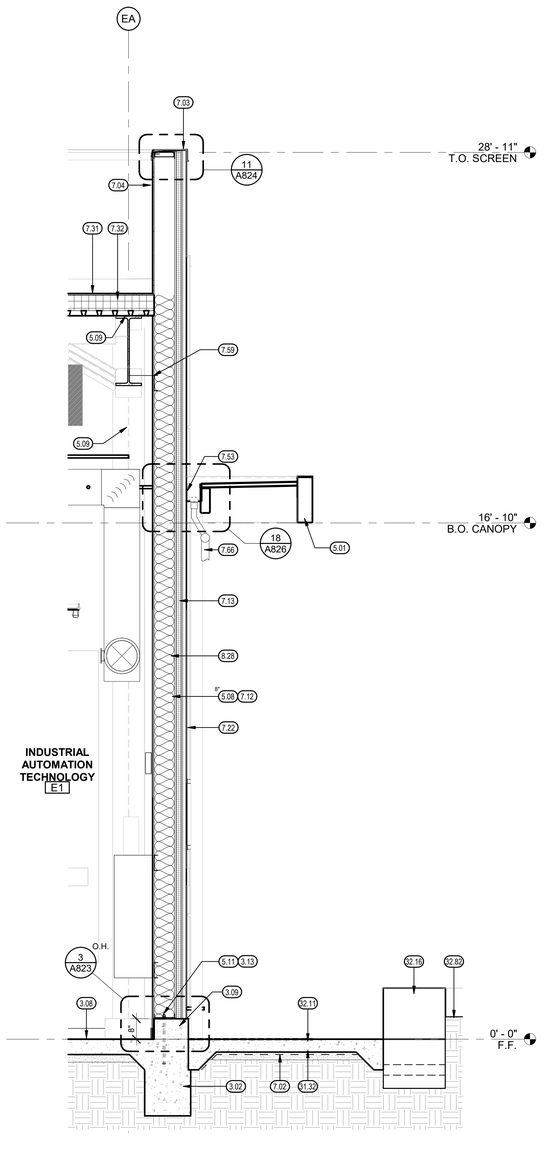

WALL SECTION - BUILDING E 1/2" = 1'-0" 10

KEYNOTES (00.00)

3.02	CONCRETE FOOTING, SEE STRUCTURAL
3.08	INTERIOR CONCRETE SLAB OVER VAPOR BARRIER, SEE STRUCTURAL
3.09	CONCRETE CURB POURED AND FINISHED INTEGRAL WITH CONCRETE SLAB
3.13	CONCRETE ANCHORS, SEE STRUCTURAL
5.01	STRUCTURAL STEEL FRAMING, SEE STRUCTURAL
5.08	6" METAL STUDS (OR OTHER SIZE INDICATED), SEE STRUCTURAL
5.09	ROOF FRAMING, SEE STRUCTURAL
5.11	METAL SILL TRACK SET IN CONTINUOUS SEALANT, SEE STRUCTURAL
5.12	METAL SOFFIT/CEILING FRAMING AT 16" O.C. (SEE 3/A840)
5.14	ROOF CANOPY METAL DECK, SEE STRUCTURAL
5.16	HSS 1" x 2" x 1/8" @ 48" o.c., SEE STRUCTURAL
7.02	VAPOR BARRIER
7.03	MIN. 24 GA. SHEET METAL CAP/SILL FLASHING (PAINT) SLOPED 1/2":12" MIN.
7.04	SINGLE PLY ROOFING MEMBRANE OVER COVER BOARD OVER 5/8" GLASS MATT GYP. SHEATHING. CARRY MEMBRANE UP AND OVER TOP OF PARAPET AND DOWN ONTO ROOF SURFACE 12" MIN., TYP.
7.05	RIGID INSULATION SLOPED CRICKET BY ROOFING CONTRACTOR W/MIN. 1/4" PER FOOT SLOPE TOWARD DRAIN
7.12	FIBER GLASS BATT INSULATION (R-21 OR AS INDICATED)
7.13	2" RIGID WALL INSULATION
7.22	TYPE 1 HORIZONTALE METAL SIDING OVER VERTICAL BATTEN SYSTEM
7.31	SINGLE PLY MEMBRANE ROOFING SYSTEM OVER COVERBOARD
7.32	MIN. 6" RIGID INSULATION (BY ROOFING CONTRACTOR) AND METAL ROOF DECK, SEE STRUCTURAL
7.34	APPLY RUBBERIZED COATING TO TOP OF METAL DECK AND SIDE OF PERIMETER BEAMS FOR WATER-TIGHT SEAL
7.53	16 GA. STAINLESS STEEL GUTTER, WELD ALL SEAMS WATER TIGHT. KEEP ENDS +/- 3/4" AWAY FROM CROSS SUPPORT BEAMS (FLASH WATER TIGHT)
7.59	18 GAUGE G.I. CLOSURE STRIP SIZED AS REQUIRED (PAINT) w/ 6" VERT. LETG & 2-#10 S.M. SCREWS TO STUDS @16" o.c. MAX.
7.66	3" I.D. GALV. PIPE AND DOWNSPOUT (FROM (2) 3" I.D. PIPES TO GUTTERS), SEE PLUMBING
8.01	DOOR AND FRAME AS SCHEDULED (SIDE LITES WHERE INDICATED)
8.23	ALUMINUM CURTAIN WALL WINDOWS & ENTRANCE DOORS, SEE SCHEDULES
8.28	CURTAIN WALL WINDOWS PER **10 / A431** AT SIMILAR CONDITION
9.13	5/8" EXTERIOR GYPSUM SHEATHING AND WEATHER BARRIER
9.17	7/8" EXTERIOR 3-COAT PLASTER SYSTEM WITH ACRYLIC COATING
31.32	SAND/AGGREGATE BASE PER SOILS REPORT, SEE CIVIL AND STRUCTURAL
32.11	CONCRETE PAVING/WALK, SLOPE TO DRAIN AWAY FROM BUILDING, SEE CIVIL
32.16	CAST-IN-PLACE CONCRETE BENCH, SEE **5 / A105**
32.82	PLANTER AREA, SEE LANDSCAPE

GENERAL NOTES

A. SEE STRUCTURAL FOR TOP OF STEEL ELEVATION (T.O.S.).

KEYPLAN

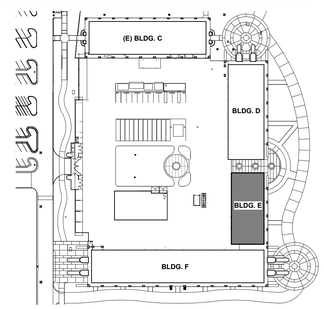

FOR BID ONLY

Teter, LLP expressly reserves its common law copyright and other property rights in these plans. This document, the ideas and designs incorporated herein, as an instrument of professional service, is not to be used in whole or part, for any other project without prior written authorization.

MARK	DATE	DESCRIPTION
	11/1/2022	DSA RESUBMITTAL

LICENSED ARCHITECT RYAN ODOM C-32422 STATE OF CALIFORNIA

TETER, LLP
FRESNO HEADQUARTERS
VISALIA | BAKERSFIELD | MODESTO | SAN LUIS OBISPO
ARCHITECTS ENGINEERS CONNECTED

TULARE CAMPUS CTE
COLLEGE OF THE SEQUOIAS
4999 E. BARDSLEY AVE.
TULARE, CA

DRAWING TITLE
WALL SECTIONS

PROJECT NO.
21-12032

DRAWING
A432

PLOT DATE: 11/2/2022 11:51:38 AM

\\tetr-file1\Users\ryan.odom\Documents\12032-A-COS Tulare CTE_ryan.odomNLB27.rvt

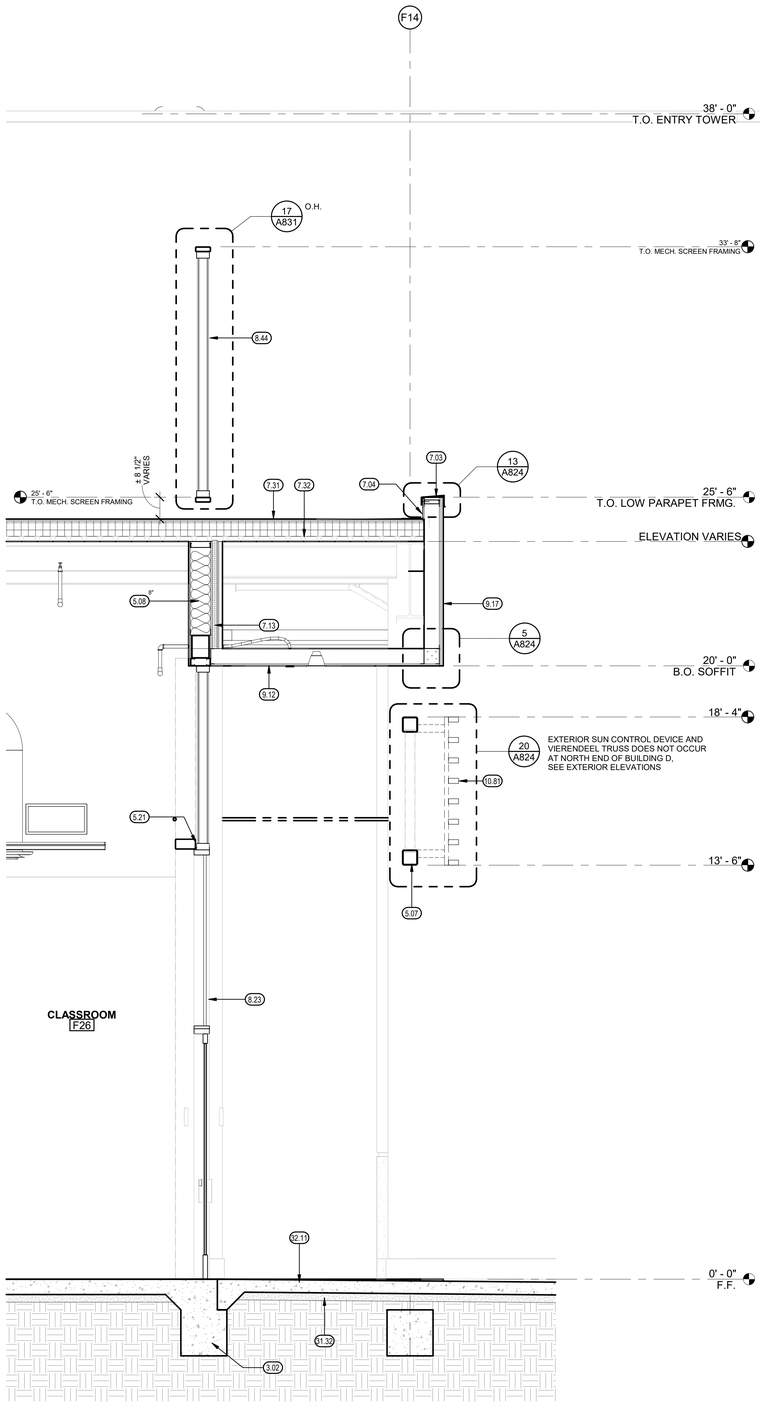

WALL SECTION - BUILDINGS D AND F 1/2" = 1'-0" 20

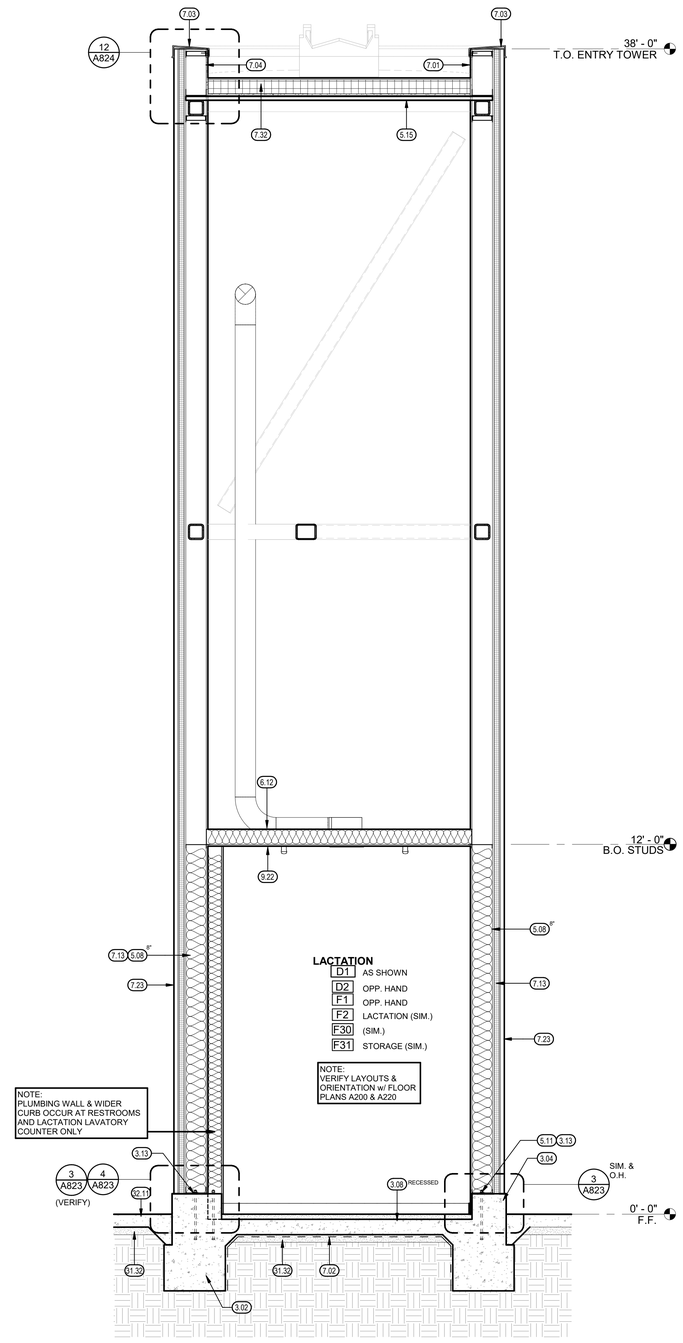

WALL SECTION - BUILDINGS D AND F ENTRY TOWERS 1/2" = 1'-0" 10

KEYNOTES

3.02	CONCRETE FOOTING, SEE STRUCTURAL
3.04	8" HIGH CONCRETE CURB, TYP.
3.08	INTERIOR CONCRETE SLAB OVER VAPOR BARRIER, SEE STRUCTURAL
3.13	CONCRETE ANCHORS, SEE STRUCTURAL
5.07	VIERENDEEL TRUSS, SEE STRUCTURAL (PAINT)
5.08	6" METAL STUDS (OR OTHER SIZE INDICATED), SEE STRUCTURAL
5.11	METAL SILL TRACK SET IN CONTINUOUS SEALANT, SEE STRUCTURAL
5.15	METAL ROOF DECK, SEE STRUCTURAL
5.21	WINDOW FRAME STEEL SUPPORT BEAM & COLUMNS, SEE STRUCTURAL (PAINT)
6.12	3/4" F.R.T. WOOD SHEATHING OVER 6" STEEL JOIST FRAMING, SEE STRUCTURAL
7.01	WATERPROOFING
7.02	VAPOR BARRIER
7.03	MIN. 24 GA. SHEET METAL CAP/SILL FLASHING (PAINT) SLOPED 1/2":12" MIN.
7.04	SINGLE PLY ROOFING MEMBRANE OVER COVER BOARD OVER 5/8" GLASS MATT GYP. SHEATHING. CARRY MEMBRANE UP AND OVER TOP OF PARAPET AND DOWN ONTO ROOF SURFACE 12" MIN., TYP.
7.13	2" RIGID WALL INSULATION
7.23	TYPE 2, 3 ,& 4 HORIZ. METAL PANELS OVER VERT. BATTEN SYSYTEM
7.31	SINGLE PLY MEMBRANE ROOFING SYSTEM OVER COVERBOARD
7.32	MIN. 6" RIGID INSULATION (BY ROOFING CONTRACTOR) AND METAL ROOF DECK, SEE STRUCTURAL
8.23	ALUMINUM CURTAIN WALL WINDOWS & ENTRANCE DOORS, SEE SCHEDULES
8.44	TRANSLUCENT GLAZING PANEL ALUMINUM FRAME
9.12	3/4" EXTERIOR 3 COAT PLASTER SYSTEM WITH ACRYLIC COATING OVER HI-RIB METAL LATH
9.17	7/8" EXTERIOR 3-COAT PLASTER SYSTEM WITH ACRYLIC COATING
9.22	GYPSUM BOARD
10.81	EXTERIOR SUN CONTROL DEVICE, SEE **20 / A824**
31.32	SAND/AGGREGATE BASE PER SOILS REPORT, SEE CIVIL AND STRUCTURAL
32.11	CONCRETE PAVING/WALK, SLOPE TO DRAIN AWAY FROM BUILDING, SEE CIVIL

GENERAL NOTES

A. SEE STRUCTURAL FOR TOP OF STEEL ELEVATION (T.O.S.).

KEYPLAN

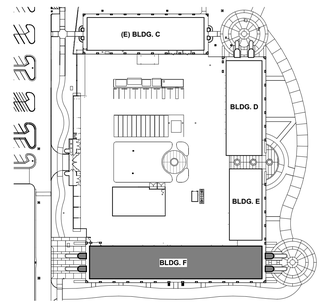

FOR BID ONLY

Teter, LLP expressly reserves its common law copyright and other property rights in these plans. This document, the ideas and designs incorporated herein, as an instrument of professional service, is not to be used in whole or part, for any other project without prior written authorization.

MARK	DATE	DESCRIPTION
	11/1/2022	DSA RESUBMITTAL

TETER, LLP
FRESNO HEADQUARTERS
VISALIA | BAKERSFIELD | MODESTO | SAN LUIS OBISPO
ARCHITECTS ENGINEERS CONNECTED

TULARE CAMPUS CTE
COLLEGE OF THE SEQUOIAS
4999 E. BARDSLEY AVE.
TULARE, CA

DRAWING TITLE
WALL SECTIONS

PROJECT NO.
21-12032

DRAWING
A433

PLOT DATE: 11/1/2022 10:02:56 PM

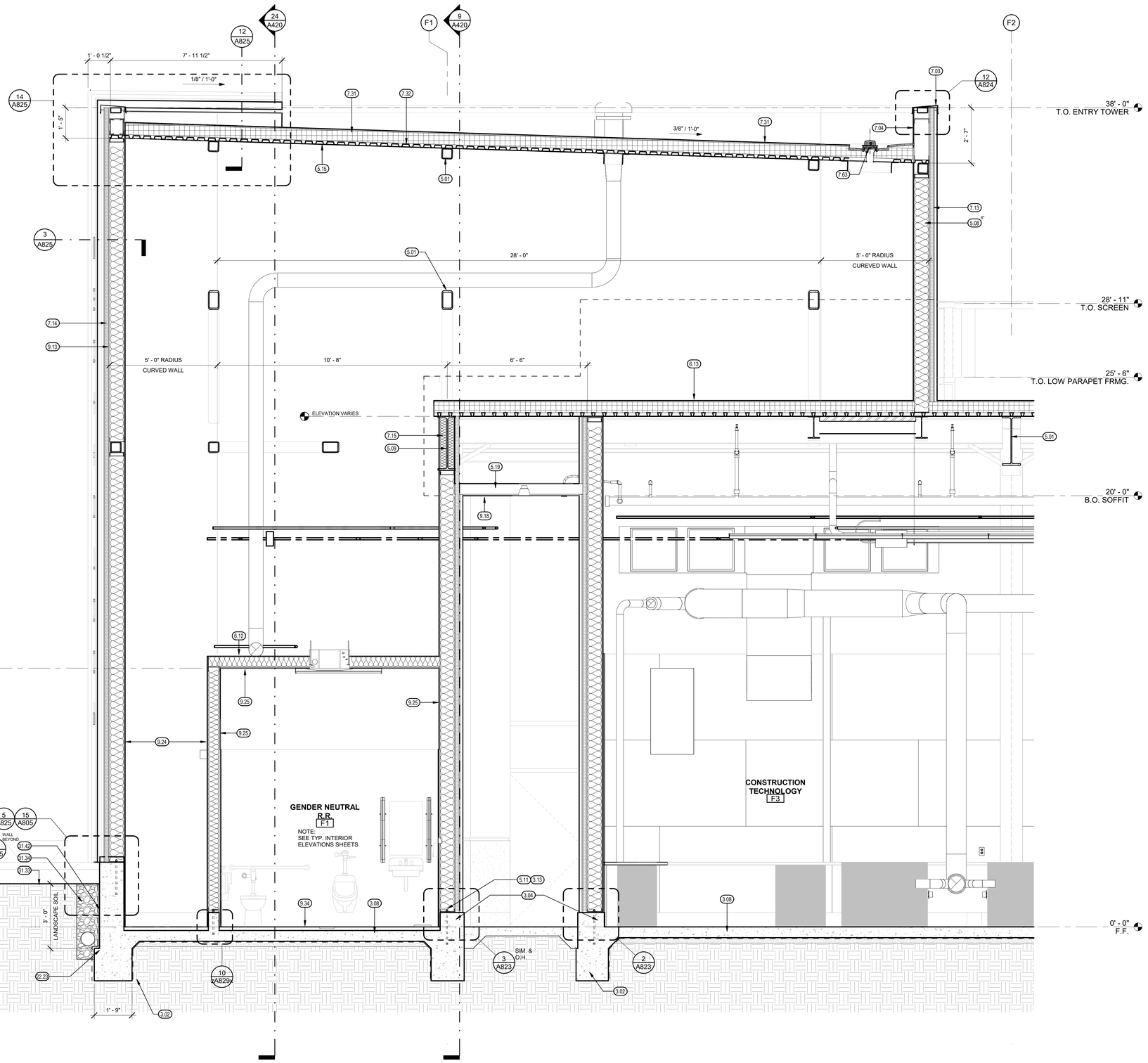

KEYNOTES (00.00)

3.02	CONCRETE FOOTING, SEE STRUCTURAL
3.04	8" HIGH CONCRETE CURB, TYP.
3.08	INTERIOR CONCRETE SLAB OVER VAPOR BARRIER, SEE STRUCTURAL
3.13	CONCRETE ANCHORS, SEE STRUCTURAL
5.01	STRUCTURAL STEEL FRAMING, SEE STRUCTURAL
5.08	6" METAL STUDS (OR OTHER SIZE INDICATED), SEE STRUCTURAL
5.09	ROOF FRAMING, SEE STRUCTURAL
5.11	METAL SILL TRACK SET IN CONTINUOUS SEALANT, SEE STRUCTURAL
5.15	METAL ROOF DECK, SEE STRUCTURAL
5.19	6" LIGHT GAUGE STEEL SOFFIT FRAMING, SEE STRUCTURAL
6.12	3/4" F.R.T. WOOD SHEATHING OVER 6" STEEL JOIST FRAMING, SEE STRUCTURAL
6.13	3/4" F.R.T. PLYWOOD SHEATHING OVER 1/2" CEMENT BOARD, 6" RIGID INSULATION & METAL ROOOF DECK, SEE STRUCTURAL
7.03	MIN. 24 GA. SHEET METAL CAP/SILL FLASHING (PAINT) SLOPED 1/2":12" MIN.
7.04	SINGLE PLY ROOFING MEMBRANE OVER COVER BOARD OVER 5/8" GLASS MATT GYP. SHEATHING, CARRY MEMBRANE UP AND OVER TOP OF PARAPET AND DOWN ONTO ROOF SURFACE 12" MIN., TYP.
7.13	2" RIGID WALL INSULATION
7.14	2" RIGID INSULATION OVER WEATHER RESISTANT BUILDING WRAP
7.15	3" FIBER GLASS BATT INSULATION BOTH SIDES OF WF BEAMS IN WALLS, TYP.
7.31	SINGLE PLY MEMBRANE ROOFING SYSTEM OVER COVERBOARD
7.32	MIN. 6" RIGID INSULATION (BY ROOFING CONTRACTOR) AND METAL ROOF DECK, SEE STRUCTURAL
7.63	ROOF DRAINS SET IN RECESSED SUMP, SEE PLUMBING AND DETAILS **1 / A830** AND **2 / A830**
9.13	5/8" EXTERIOR GYPSUM SHEATHING AND WEATHER BARRIER
9.18	MIN. 3/4" CEMENT PLASTER OVER HIGH RIB LATH
9.24	5/8" GYP. BD.
9.25	5/8" M.R. GYP. BD. (5/8" CEMENT BD. BELOW CERAMIC TILE WAINSCOT
9.34	2" MORTAR BED & FLOOR TILE
22.23	4" PVC PERFORATED TRENCH DRAIN PIPE, SEE CIVIL
31.33	TOP SOIL SLOPE TO DRAINS, SEE LANDSCAPE
31.34	AGGREGATE DRAINAGE ROCK
31.42	PROTECTION BOARD OVER FLUID APPLIED WATERPROOFING

GENERAL NOTES

A. SEE STRUCTURAL FOR TOP OF STEEL ELEVATION (T.O.S.).

KEYPLAN

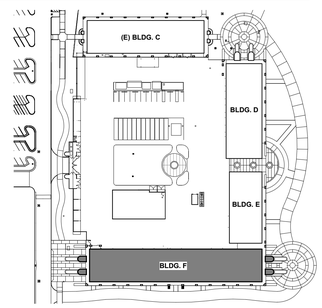

WALL SECTION - BUILDINGS D AND F ENTRY TOWERS

1/2" = 1'-0" | 10

FOR BID ONLY

Teter, LLP expressly reserves its common law copyright and other property rights in these plans. This document, the ideas and designs incorporated herein, as an instrument of professional service, is not to be used in whole or in part, for any other project without prior written authorization.

MARK	DATE	DESCRIPTION
	11/1/2022	DSA RESUBMITTAL

TETER, LLP
FRESNO HEADQUARTERS
VISALIA | BAKERSFIELD | MODESTO | SAN LUIS OBISPO
ARCHITECTS ENGINEERS CONNECTED

TULARE CAMPUS CTE
COLLEGE OF THE SEQUOIAS
4999 E. BARDSLEY AVE.
TULARE, CA

DRAWING TITLE
WALL SECTIONS

PROJECT NO.
21-12032

DRAWING
A434

PLOT DATE: 11/1/2022 10:03:03 PM

\\tetr-file1\Users\ryan.odom\Documents\12032-A-COS Tulare CTE_ryan.odomNLB27.rvt

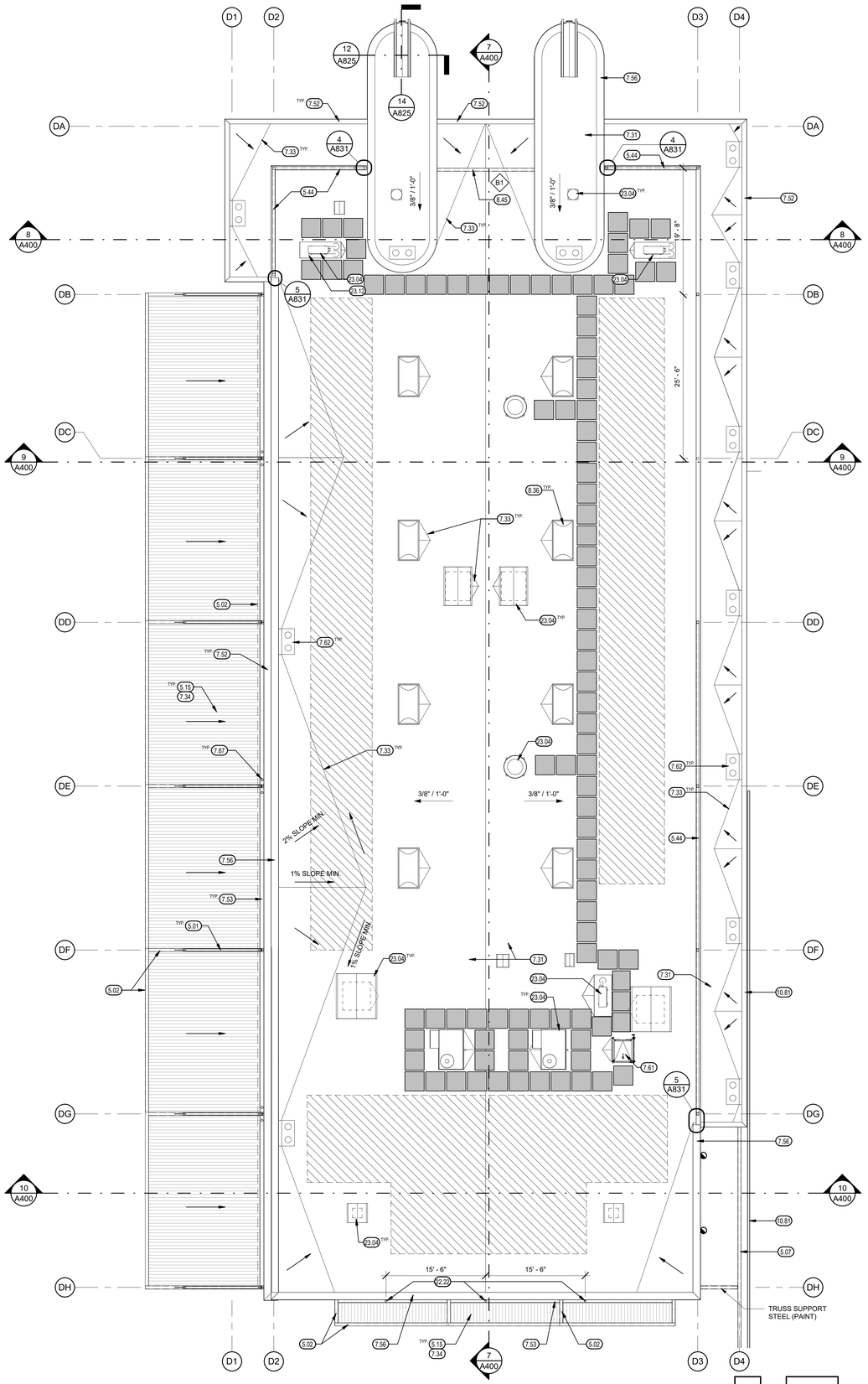

ROOF PLAN - BUILDING D

1/8" = 1'-0" | 10

KEYNOTES (00.00)

5.01	STRUCTURAL STEEL FRAMING, SEE STRUCTURAL
5.02	STEEL CANOPY, PAINT
5.07	VIERENDEEL TRUSS, SEE STRUCTURAL (PAINT)
5.15	METAL ROOF DECK, SEE STRUCTURAL
5.44	MECHANICAL SCREEN, STEEL FRAMING AND METAL SIDING, SCREEN HELD ABOVE ROOF SURFACE TO ALLOW FOR DRAINAGE, SEE **2 / A831**
7.31	SINGLE PLY MEMBRANE ROOFING SYSTEM OVER COVERBOARD
7.33	CRICKET, TAPERED INSULATION
7.34	APPLY RUBBERIZED COATING TO TOP OF METAL DECK AND SIDE OF PERIMETER BEAMS FOR WATER-TIGHT SEAL
7.52	SHEET METAL SHELF FLASHING, PAINT
7.53	16 GA. STAINLESS STEEL GUTTER, WELD ALL SEAMS WATER TIGHT. KEEP ENDS +/- 3/4" AWAY FROM CROSS SUPPORT BEAMS (FLASH WATER TIGHT)
7.56	PRE-FINISHED SHEET METAL CAP TO MATCH WALL SIDING
7.61	ROOF ACCESS HATCH W/ INTEGRAL GUARDRAIL, SEE **22 / A830**
7.62	ROOF DRAIN AND OVERFLOW, SEE PLUMBING AND **1 / A830** & **2 / A830**
7.67	GUTTER DRAINS & DOWNSPOUTS. SEE PLUMBING
8.36	3' x 6' SKYLIGHT, TYP. SEE **15 / A830** FOR CURB
8.45	TRANSLUCENT GLAZING PANEL SCREEN WALL WITH SHEET METAL CAP
10.81	EXTERIOR SUN CONTROL DEVICE, SEE **20 / A824**
22.22	PIPE DRAIN FROM GUTTER, TYP. SEE PLUMBING AND EXTERIOR ELEVATIONS
23.04	MECHANICAL EQUIPMENT, SEE MECHANICAL
23.12	MECHANICAL EQUIPMENT PLATFORM, SEE **10 / A830**

LEGEND

- INDICATES DOWNWARD DIRECTION OF ROOF SLOPE MIN. SLOPE IN ANY DIRECTION SHALL NOT BE LESS THAN 1/4" :12". CRICKET VALLEYS SHALL SLOPE NOT LESS THAN 1/8" : 12" TO DRAINS.
- ROOF DRAIN / OVER FLOW DRAIN, SEE 1 & **2 / A830** AND PLUMBING DRAWINGS.
- SOLAR READY AREA
- ROOF PROTECTION PADS (3" MIN / 4" MAX)

SOLAR READY CALCULATIONS

PER CEC SECTION 110.10, MANDATORY SOLAR READY BUILDING REQUIREMENTS:

A. CEC SECTION 110.10(B)1- MINIMUM INDIVIDUAL AREA SHALL BE 160 SF, WITH A MINIMUM DIMENSION OF 5'-0" IN ANY DIRECTION.

B. CEC SECTION 110.10(B)1: MINIMUM TOTAL AREA SHALL BE 15 PERCENT OF THE TOTAL ROOF AREA.

C. REQUIRED ROOF AREA: 15,848 SF X 0.15 = 2,377 SF

D. ACTUAL SOLAR READY AREA PROVIDED: 2,995 SF

GENERAL NOTES

A. FOR TYPICAL PIPE THROUGH ROOF PENETRATIONS, SEE 3, 4, & **9 / A830**

B. PROVIDE SEPARATE DRAIN LINES FOR ROOF DRAINS AND OVERFLOW DRAINS. PROVIDE ALL HANGERS + SUPPORTS FOR PIPE AS REQUIRED BE CODE.

C. FOR TYPICAL ROOF CLEARANCES, SEE **4 / A830**

D. FOR EXHAUST FAN OPENING THROUGH ROOF, SEE **12 / A830**

KEYPLAN

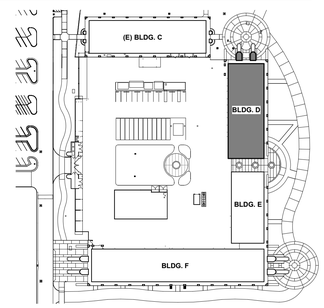

FOR BID ONLY

Teter, LLP expressly reserves its common law copyright and other property rights in these plans. This document, the ideas and designs incorporated herein, as an instrument of professional service, is not to be used in whole or in part, for any other project without prior written authorization.

MARK	DATE	DESCRIPTION
	11/1/2022	DSA RESUBMITTAL

LICENSED ARCHITECT * VINOD KUMAR * JOHN COUTER * No. C-23423 * STATE OF CALIFORNIA

TETER, LLP
ARCHITECTS ENGINEERS CONNECTED
FRESNO HEADQUARTERS
VISALIA | BAKERSFIELD | MODESTO | SAN LUIS OBISPO

TULARE CAMPUS CTE
COLLEGE OF THE SEQUOIAS
4999 E. BARDSLEY AVE.
TULARE, CA

DRAWING TITLE
ROOF PLAN

PROJECT NO.
21-12032

DRAWING
A500

\\tetr-file1\Users\ryan.odom\Documents\12032-A-COS Tulare CTE_ryan.odomNLB27.rvt
PLOT DATE: 11/1/2022 10:03:10 PM

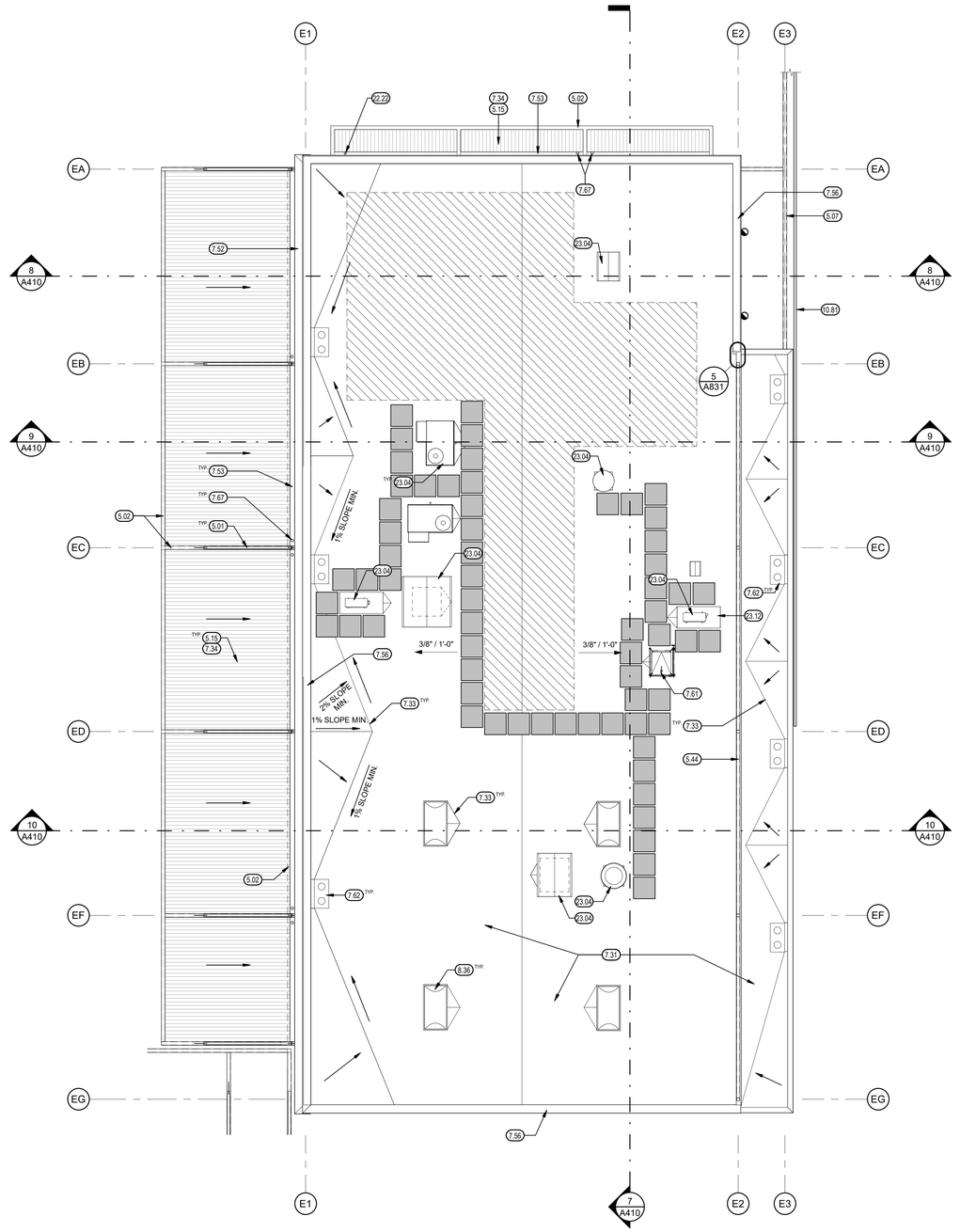

KEYNOTES (00.00)

5.01	STRUCTURAL STEEL FRAMING, SEE STRUCTURAL
5.02	STEEL CANOPY, PAINT
5.07	VIERENDEEL TRUSS, SEE STRUCTURAL (PAINT)
5.15	METAL ROOF DECK, SEE STRUCTURAL
5.44	MECHANICAL SCREEN, STEEL FRAMING AND METAL SIDING, SCREEN HELD ABOVE ROOF SURFACE TO ALLOW FOR DRAINAGE, SEE **2 / A831**
7.31	SINGLE PLY MEMBRANE ROOFING SYSTEM OVER COVERBOARD
7.33	CRICKET, TAPERED INSULATION
7.34	APPLY RUBBERIZED COATING TO TOP OF METAL DECK AND SIDE OF PERIMETER BEAMS FOR WATER-TIGHT SEAL
7.52	SHEET METAL SHELF FLASHING, PAINT
7.53	16 GA. STAINLESS STEEL GUTTER, WELD ALL SEAMS WATER TIGHT. KEEP ENDS +/- 3/4" AWAY FROM CROSS SUPPORT BEAMS (FLASH WATER TIGHT)
7.56	PRE-FINISHED SHEET METAL CAP TO MATCH WALL SIDING
7.61	ROOF ACCESS HATCH W/ INTEGRAL GUARDRAIL, SEE **22 / A830**
7.62	ROOF DRAIN AND OVERFLOW, SEE PLUMBING AND **1 / A830** & **2 / A830**
7.67	GUTTER DRAINS & DOWNSPOUTS, SEE PLUMBING
8.36	3' x 6' SKYLIGHT, TYP. SEE **15 / A830** FOR CURB
10.81	EXTERIOR SUN CONTROL DEVICE, SEE **20 / A824**
22.22	PIPE DRAIN FROM GUTTER, TYP. SEE PLUMBING AND EXTERIOR ELEVATIONS
23.04	MECHANICAL EQUIPMENT, SEE MECHANICAL
23.12	MECHANICAL EQUIPMENT PLATFORM, SEE **10 / A830**

LEGEND

- INDICATES DOWNWARD DIRECTION OF ROOF SLOPE MIN. SLOPE IN ANY DIRECTION SHALL NOT BE LESS THAN 1/4" :12". CRICKET VALLEYS SHALL SLOPE NOT LESS THAN 1/8" : 12" TO DRAINS.
- ROOF DRAIN / OVER FLOW DRAIN, SEE 1 & **2 / A830** AND PLUMBING DRAWINGS.
- SOLAR READY AREA
- ROOF PROTECTION PADS (3" MIN / 4" MAX)

SOLAR READY CALCULATIONS

PER CEC SECTION 110.10, MANDATORY SOLAR READY BUILDING REQUIREMENTS:

A. CEC SECTION 110.10(B)1: MINIMUM INDIVIDUAL AREA SHALL BE 160 SF, WITH A MINIMUM DIMENSION OF 5'-0" IN ANY DIRECTION.

B. CEC SECTION 110.10(B)1: MINIMUM TOTAL AREA SHALL BE 15 PERCENT OF THE TOTAL ROOF AREA.

C. REQUIRED ROOF AREA: 10,457 SF X 0.15 = 1,569 SF

D. ACTUAL SOLAR READY AREA PROVIDED: 1,778 SF

GENERAL NOTES

A. FOR TYPICAL PIPE THROUGH ROOF PENETRATIONS, SEE 3, 4, & **9 / A830**

B. PROVIDE SEPARATE DRAIN LINES FOR ROOF DRAINS AND OVERFLOW DRAINS. PROVIDE ALL HANGERS + SUPPORTS FOR PIPE AS REQUIRED BE CODE.

C. FOR TYPICAL ROOF CLEARANCES, SEE **4 / A830**

D. FOR EXHAUST FAN OPENING THROUGH ROOF, SEE **12 / A830**

KEYPLAN

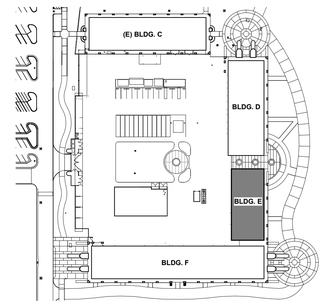

ROOF PLAN - BUILDING E

1/8" = 1'-0"

10

Teter, LLP expressly reserves its common law copyright and other property rights in these plans. This document, the ideas and designs incorporated herein, as an instrument of professional service, is not to be used in whole or part, for any other project without prior written authorization.

FOR BID ONLY

MARK	DATE	DESCRIPTION
	11/1/2022	DSA RESUBMITTAL

LICENSED ARCHITECT * VINOD KUMAR * No. 23643 * STATE OF CALIFORNIA

TETER, LLP
FRESNO HEADQUARTERS
VISALIA | BAKERSFIELD | MODESTO | SAN LUIS OBISPO
ARCHITECTS ENGINEERS CONNECTED

TETER

TULARE CAMPUS CTE
COLLEGE OF THE SEQUOIAS
4999 E. BARDSLEY AVE.
TULARE, CA

DRAWING TITLE
ROOF PLAN

PROJECT NO.
21-12032

DRAWING
A510

PLOT DATE: 11/1/2022 10:03:16 PM

\\tetr-file1\Users\ryan.odom\Documents\12032-A-COS Tulare CTE_ryan.odomNLB27.rvt

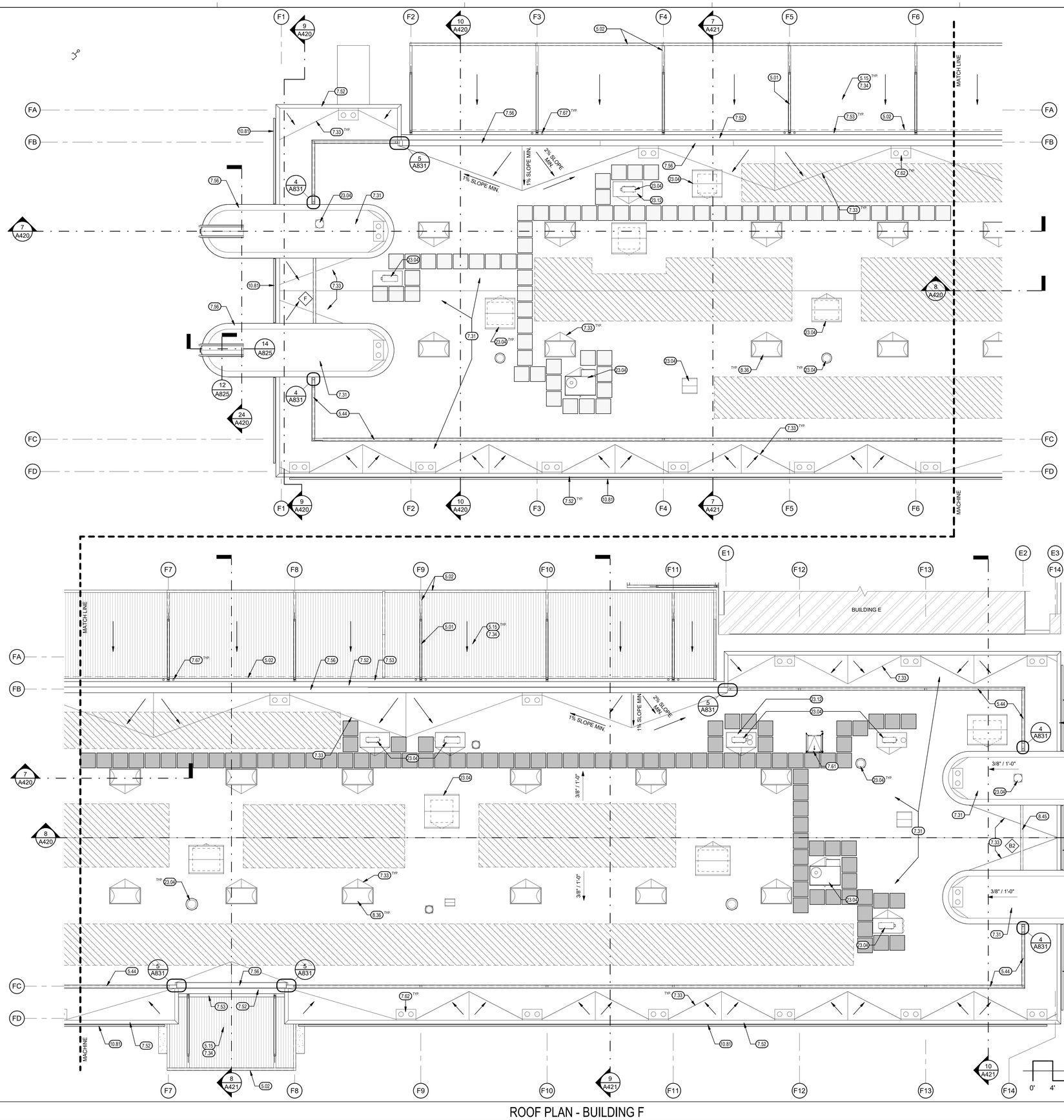

ROOF PLAN - BUILDING F

1/8" = 1'-0" | 10

KEYNOTES (00.00)

5.01	STRUCTURAL STEEL FRAMING, SEE STRUCTURAL
5.02	STEEL CANOPY, PAINT
5.15	METAL ROOF DECK, SEE STRUCTURAL
5.44	MECHANICAL SCREEN, STEEL FRAMING AND METAL SIDING, SCREEN HELD ABOVE ROOF SURFACE TO ALLOW FOR DRAINAGE, SEE **2 / A831**
7.31	SINGLE PLY MEMBRANE ROOFING SYSTEM OVER COVERBOARD
7.33	CRICKET, TAPERED INSULATION
7.34	APPLY RUBBERIZED COATING TO TOP OF METAL DECK AND SIDE OF PERIMETER BEAMS FOR WATER-TIGHT SEAL
7.52	SHEET METAL SHELF FLASHING, PAINT
7.53	16 GA. STAINLESS STEEL GUTTER, WELD ALL SEAMS WATER TIGHT. KEEP ENDS +/- 3/4" AWAY FROM CROSS SUPPORT BEAMS (FLASH WATER TIGHT)
7.56	PRE-FINISHED SHEET METAL CAP TO MATCH WALL SIDING
7.61	ROOF ACCESS HATCH W/ INTEGRAL GUARDRAIL, SEE **22 / A830**
7.62	ROOF DRAIN AND OVERFLOW, SEE PLUMBING AND **1 / A830** & **2 / A830**
7.67	GUTTER DRAINS & DOWNSPOUTS, SEE PLUMBING
8.36	3'-x 6' SKYLIGHT, TYP. SEE **15 / A830** FOR CURB
8.45	TRANSLUCENT GLAZING PANEL SCREEN WALL WITH SHEET METAL CAP
10.81	EXTERIOR SUN CONTROL DEVICE, SEE **20 / A824**
23.04	MECHANICAL EQUIPMENT, SEE MECHANICAL
23.12	MECHANICAL EQUIPMENT PLATFORM, SEE **10 / A830**

LEGEND

- INDICATES DOWNWARD DIRECTION OF ROOF SLOPE MIN. SLOPE IN ANY DIRECTION SHALL NOT BE LESS THAN 1/4" :12". CRICKET VALLEYS SHALL SLOPE NOT LESS THAN 1/8" : 12" TO DRAINS.
- ROOF DRAIN / OVER FLOW DRAIN, SEE 1 & **2 / A830** AND PLUMBING DRAWINGS.
- SOLAR READY AREA
- ROOF PROTECTION PADS (3" MIN / 4" MAX)

SOLAR READY CALCULATIONS

PER CEC SECTION 110.10, MANDATORY SOLAR READY BUILDING REQUIREMENTS:

A. CEC SECTION 110.10(B)1: MINIMUM INDIVIDUAL AREA SHALL BE 160 SF, WITH A MINIMUM DIMENSION OF 5'-0" IN ANY DIRECTION.

B. CEC SECTION 110.10(B)1: MINIMUM TOTAL AREA SHALL BE 15 PERCENT OF THE TOTAL ROOF AREA.

C. REQUIRED ROOF AREA: 27,087 SF X 0.15 = 4,063 SF

D. ACTUAL SOLAR READY AREA PROVIDED: 4,352 SF

GENERAL NOTES

A. FOR TYPICAL PIPE THROUGH ROOF PENETRATIONS, SEE 3, 4, & **9 / A830**

B. PROVIDE SEPARATE DRAIN LINES FOR ROOF DRAINS AND OVERFLOW DRAINS. PROVIDE ALL HANGERS + SUPPORTS FOR PIPE AS REQUIRED BE CODE.

C. FOR TYPICAL ROOF CLEARANCES, SEE **4 / A830**

D. FOR EXHAUST FAN OPENING THROUGH ROOF, SEE **12 / A830**

KEYPLAN

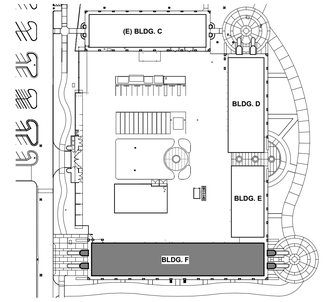

Teter, LLP expressly reserves its common law copyright and other property rights in these plans. This document, the ideas and designs incorporated herein, as an instrument of professional service, is not to be used in whole or in part, for any other project without prior written authorization.

FOR BID ONLY

MARK	DATE	DESCRIPTION
	11/1/2022	DSA RESUBMITTAL

LICENSED ARCHITECT * VINOD KUMAR * No. C-23243 * STATE OF CALIFORNIA

TETER, LLP
FRESNO HEADQUARTERS
VISALIA | BAKERSFIELD | MODESTO | SAN LUIS OBISPO
ARCHITECTS ENGINEERS CONNECTED
TETER

TULARE CAMPUS CTE
COLLEGE OF THE SEQUOIAS
4999 E. BARDSLEY AVE.
TULARE, CA

DRAWING TITLE: ROOF PLAN

PROJECT NO. 21-12032

DRAWING A520

\\tetr-file1\Users\ryan.odom\Documents\12032-A-COS Tulare CTE_ryan.odomNLB27.rvt

PLOT DATE: 11/1/2022 10:03:25 PM

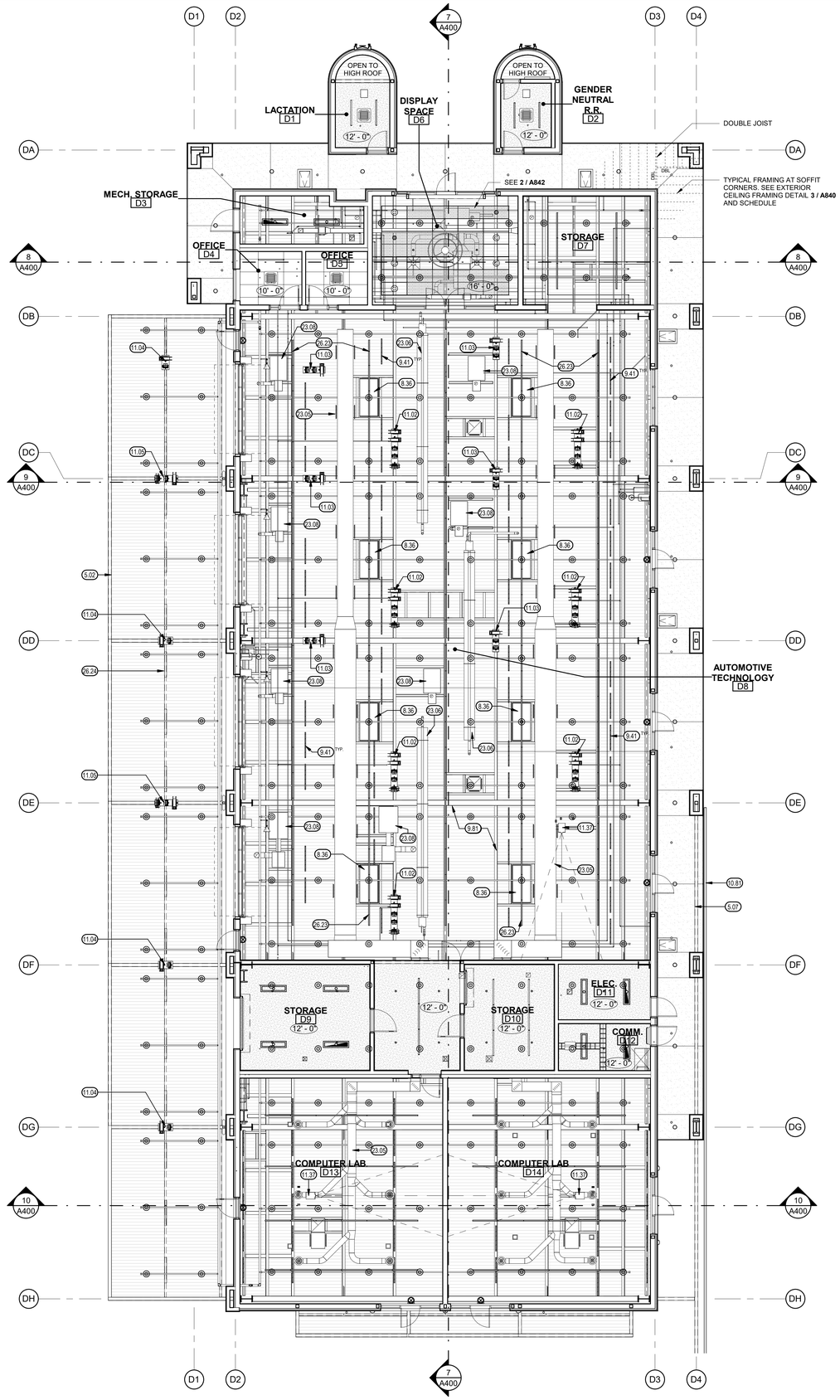

KEYNOTES (00.00)

5.02	STEEL CANOPY, PAINT
5.07	VIERENDEEL TRUSS, SEE STRUCTURAL (PAINT)
8.36	3' x 6' SKYLIGHT, TYP. SEE **15 / A830** FOR CURB
9.41	SUSPENDED ACOUSTIC PANEL CEILING, SEE **2 / A841**
9.81	PAINT EXPOSED STEEL ROOF STRUCTURE, DECKING & UTILITIES ABOVE
10.81	EXTERIOR SUN CONTROL DEVICE, SEE **20 / A824**
11.02	5 REEL HOSE/CABLE REELS FOR AIR, POWER, LIGHT, WATER AND 220 VOLTS, MOUNT AT +18'-0" TO BOTTOM, SEE SHEET A851
11.03	3 REEL HOSE/CABLE REELS FOR AIR, POWER, LIGHT, MOUNT AT +18'-0" OR AS INDICATED TO BOTTOM OF BEAM FLANGE, SEE SHEET A851
11.04	2 REEL HOSE/CABLE REELS FOR AIR, POWER, MOUNT AT +18'-0" OR AS INDICATED TO BOTTOM OF BEAM FLANGE, SEE SHEET A851
11.05	3 REEL HOSE/CABLE REELS FOR AIR, POWER AND 220 VOLTS , MOUNT AT +18'-0" TO BOTTOM, SEE SHEET A851
11.37	OVERHEAD PROJECTOR, SEE ELECTRICAL & STRUCTURAL FOR MOUNT
23.05	DUCT, SEE MECH, PAINT
23.06	LINEAR HEAT STRIPS, MOUNT AT 17'-6 TO BOTTOM, SEE ELECTRICAL
23.08	VEHICLE EXHAUST FLEX HOSE REELS, SEE MECHANICAL
26.23	LED LINEAR LIGHT STRIPS, MOUNT AT +18' TO BOTTOM U.N.O., SEE ELECTRICAL
26.24	LED LINEAR LIGHT STRIPS, MOUNT TO UNDERSIDE OF CANOPY BEAM, SEE ELECTRICAL

LEGEND

- SUSPENDED ACOUSTIC PANEL CEILING SYS. SEE DETAIL **2 / A841**
- 5/8" TYPE "X" GYP. BD. O/ METAL CEILING JOISTS. SEE DETAIL **2 / A840**
- EXTERIOR CEMENT PLASTER SOFFIT O/ METAL CEILING JOISTS/FRAMING, SEE STRUCTURAL AND DETAIL **3 / A840**
- SUSPENDED METAL PANEL CEILING SYSTEM, SEE SHEET A842
- EXPOSED METAL DECK, TYP.
- ROOM 101 — ROOM SYMBOL
- 1'-0" — CEILING HEIGHT
- ELECTRICAL LIGHT FIXTURE, SEE ELECTRICAL.
- MECHANICAL GRILLES, SEE MECHANICAL.
- FIRE SPRINKLER HEAD & LINE SEE FIRE PROTECTION DRAWINGS
- ATTIC ACCESS DOOR 20" x 30" U.N.O. SEE DETAIL **12 / A840**

GENERAL NOTES

A. CONTRACTOR SHALL PATCH, REPAIR OR REPLACE ANY ADJACENT WORK (WALL, CEILING, FLOOR SURFACES, ETC.) THAT IS DAMAGED, REMOVED AND/OR DEMOLISHED DURING THE COURSE OF CONSTRUCTION. SEE SPECIFICATION REQUIREMENTS FOR CUTTING & PATCHING.

B. FOR SUPPORT REQUIREMENTS FOR NEW LIGHT FIXTURES OR HVAC SYSTEM REGISTERS, SEE MECHANICAL AND ELECTRICAL

KEYPLAN

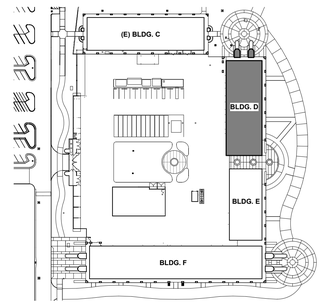

REFLECTED CEILING PLAN - BUILDING D

1/8" = 1'-0" | 10

FOR BID ONLY

Teter, LLP expressly reserves its common law copyright and other property rights in these plans. This document, the ideas and designs, as an instrument of professional service, is not to be used in whole or part, for any purpose without prior written authorization.

MARK	DATE	DESCRIPTION
	11/1/2022	DSA RESUBMITTAL

TETER, LLP
FRESNO HEADQUARTERS
VISALIA | BAKERSFIELD | MODESTO | SAN LUIS OBISPO
ARCHITECTS ENGINEERS CONNECTED

TULARE CAMPUS CTE
COLLEGE OF THE SEQUOIAS
4999 E. BARDSLEY AVE.
TULARE, CA

DRAWING TITLE
REFLECTED CEILING PLAN

PROJECT NO.
21-12032

DRAWING
A600

LICENSED ARCHITECT JOSHUA C. TETER No. C-32693 STATE OF CALIFORNIA

\\tetr-file1\Users\ryan.odom\Documents\12032-A-COS Tulare CTE_ryan.odomNLB27.rvt
PLOT DATE: 11/1/2022 10:03:48 PM

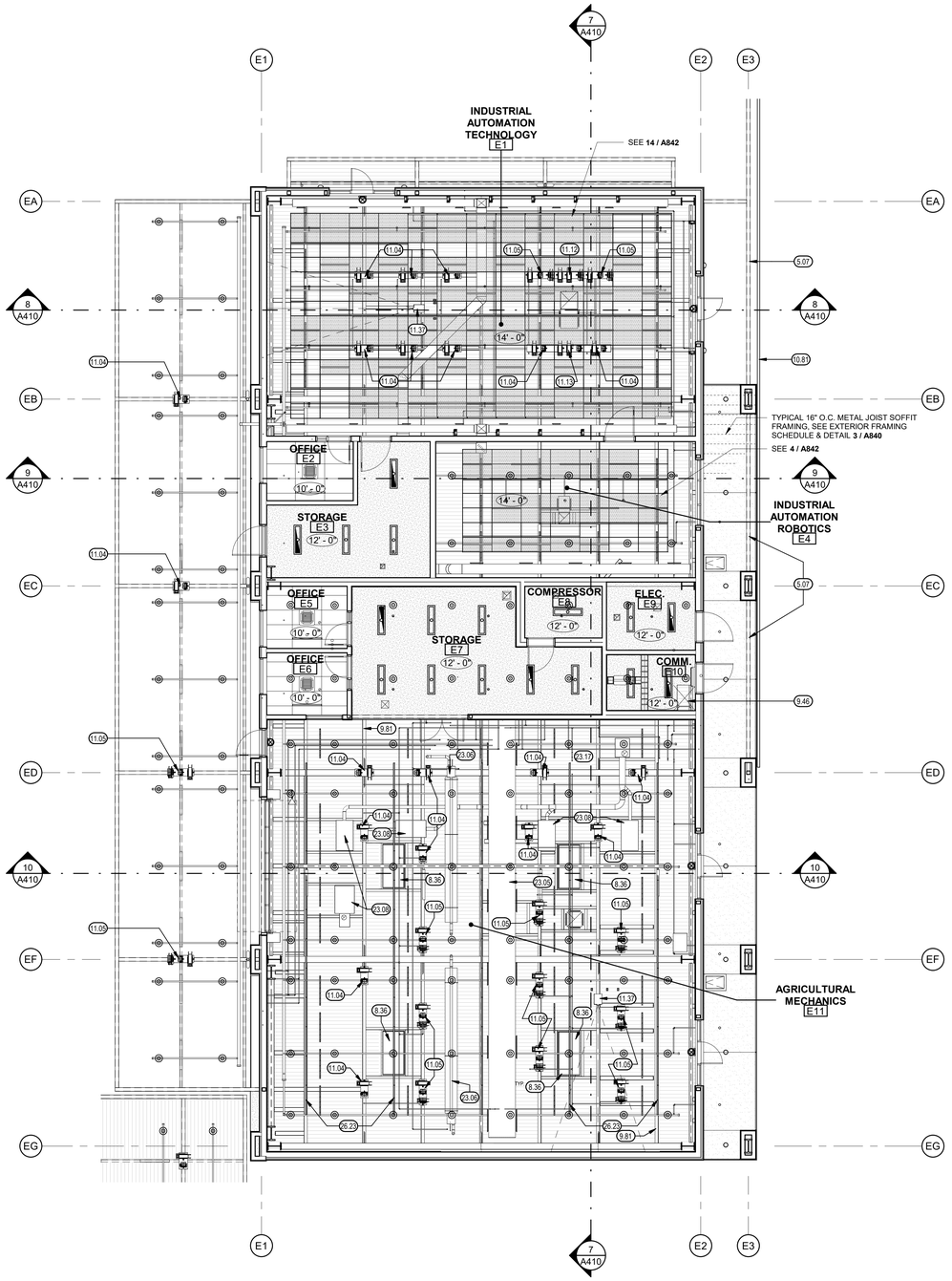

NOTE: PROVIDE COORDINATIUON DRAWINGS FOR ALL OVERHEAD MOUNTED ITEMS IN ROOMS E1 INDUSTRIAL AUTOMATION TECHNOLOGY, E4 INDUSTRIAL AUTOMATION ROBOTICS, AND E11 AGRICULTRUAL MECHANICS. OVERHEAD ITEMS INCLUDE, BUT ARE NOT LIMITED TO, MECHANICAL AND ELECTRICAL EQUIPMENT, FIRE SPRINKLER PIPING AND HEADS, DUCTS, LIGHT FIXTURES, ELECTRICAL CONDUIT, AND COMPRESSED AIR PIPING.

0' 4' 8' 16' 32'

NORTH

KEYNOTES

5.07	VIERENDEEL TRUSS, SEE STRUCTURAL (PAINT)
8.36	3' x 6' SKYLIGHT, TYP. SEE **15 / A830** FOR CURB
9.46	OPEN TO MECHANICAL PLATFORM ABOVE
9.81	PAINT EXPOSED STEEL ROOF STRUCTURE, DECKING & UTILITIES ABOVE
10.81	EXTERIOR SUN CONTROL DEVICE, SEE **20 / A824**
11.04	2 REEL HOSE/CABLE REELS FOR AIR, POWER, MOUNT AT +18'-0" OR AS INDICATED TO BOTTOM OF BEAM FLANGE, SEE SHEET A851
11.05	3 REEL HOSE/CABLE REELS FOR AIR, POWER AND 220 VOLTS , MOUNT AT +18'-0" TO BOTTOM, SEE SHEET A851
11.12	3 REEL HOSE /CABLE REELS FOR AIR, WATER AND 208 VOLTS, MOUNT AT +14'-6" TO BOTTOM, SEE SHEET A851
11.13	3 REEL HOSE/CABLE REELS FOR AIR, WATER AND POWER, MOUNT AT +14'-6" TO BOTTOM, SEE SHEET A851
11.37	OVERHEAD PROJECTOR, SEE ELECTRICAL & STRUCTURAL FOR MOUNT
23.05	DUCT, SEE MECH, PAINT
23.06	LINEAR HEAT STRIPS, MOUNT AT 17'-6 TO BOTTOM, SEE ELECTRICAL
23.08	VEHICLE EXHAUST FLEX HOSE REELS, SEE MECHANICAL
23.17	FUME HOOD SUSPENDED FROM STRUCTURE, SEE MECHANICAL
26.23	LED LINEAR LIGHT STRIPS, MOUNT AT +18' TO BOTTOM U.N.O., SEE ELECTRICAL

LEGEND

- SUSPENDED ACOUSTIC PANEL CEILING SYS. SEE DETAIL **2 / A841**
- 5/8" TYPE "X" GYP. BD. O/ METAL CEILING JOISTS. SEE DETAIL **2 / A840**
- EXTERIOR CEMENT PLASTER SOFFIT O/ METAL CEILING JOISTS/FRAMING, SEE STRUCTURAL AND DETAIL **3 / A840**
- SUSPENDED METAL PANEL CEILING SYSTEM, SEE SHEET A842
- EXPOSED METAL DECK, TYP.
- ROOM 101 — ROOM SYMBOL
- 1'-0" — CEILING HEIGHT
- ELECTRICAL LIGHT FIXTURE, SEE ELECTRICAL.
- MECHANICAL GRILLES, SEE MECHANICAL.
- FIRE SPRINKLER HEAD & LINE SEE FIRE PROTECTION DRAWINGS
- ATTIC ACCESS DOOR 20" x 30" U.N.O. SEE DETAIL **12 / A840**

GENERAL NOTES

A. CONTRACTOR SHALL PATCH, REPAIR OR REPLACE ANY ADJACENT WORK (WALL, CEILING, FLOOR SURFACES, ETC.) THAT IS DAMAGED, REMOVED AND/OR DEMOLISHED DURING THE COURSE OF CONSTRUCTION. SEE SPECIFICATION REQUIREMENTS FOR CUTTING & PATCHING.

B. FOR SUPPORT REQUIREMENTS FOR NEW LIGHT FIXTURES OR HVAC SYSTEM REGISTERS, SEE MECHANICAL AND ELECTRICAL

KEYPLAN

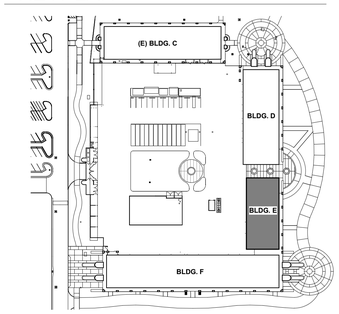

FOR BID ONLY

Teter, LLP expressly reserves its common law copyright and other property rights in these plans. This document, the ideas and designs incorporated herein, as an instrument of professional service, is not to be used in whole or in part, for any other project without prior written authorization.

MARK	DATE	DESCRIPTION
	11/1/2022	DSA RESUBMITTAL

LICENSED ARCHITECT * VINOD TETER * No. C-12693 * STATE OF CALIFORNIA

TETER, LLP
ARCHITECTS ENGINEERS CONNECTED
FRESNO HEADQUARTERS
VISALIA | BAKERSFIELD | MODESTO | SAN LUIS OBISPO

TULARE CAMPUS CTE
COLLEGE OF THE SEQUOIAS
4999 E. BARDSLEY AVE.
TULARE, CA

DRAWING TITLE
REFLECTED CEILING PLAN

PROJECT NO.
21-12032

DRAWING
A610

PLOT DATE: 11/1/2022 10:04:22 PM
\\tetr-file1\Users\ryan.odom\Documents\12032-A-COS Tulare CTE_ryan.odomNLB27.rvt

\\tetr-file1\Users\ryan.odom\Documents\12032-A-COS Tulare CTE_ryan.odomNLB27.rvt

NOTE: PROVIDE COORDINATIUON DRAWINGS FOR ALL OVERHEAD MOUNTED ITEMS IN ROOMS F3 CONSTRUCTION TECHNOLOGY, F8 CLASSROOM, F9 ELECTRICIAN TRAINING, F10 ENVIRONMENTAL CONTROLS LAB, F19 INDUSTRIAL MAINTENANCE LAB, F26 CLASSROOM, AND F29 MEETING. OVERHEAD ITEMS INCLUDE, BUT ARE NOT LIMITED TO, MECHANICAL AND ELECTRICAL EQUIPMENT, FIRE SPRINKLER PIPING AND HEADS, DUCTS, LIGHT FIXTURES, ELECTRICAL CONDUIT, AND COMPRESSED AIR PIPING.

KEYNOTES (00.00)

5.02	STEEL CANOPY, PAINT
5.07	VIERENDEEL TRUSS, SEE STRUCTURAL (PAINT)
8.36	3' x 6' SKYLIGHT, TYP. SEE **15 / A830** FOR CURB
9.46	OPEN TO MECHANICAL PLATFORM ABOVE
9.47	FREE FLOATING SUSPENDED ACOUSTIC PANEL CEILING, SEE **23 / A841**
9.48	1-HR. CLG.-FLR. ASSEMBLY w/ 2 LAYERS 5/8" TYPE 'X' GYP. BD. ON CLG. SEE **4 / A806**
9.68	1-HR. WALLS SHOWN WITH 5/8" TYPE 'X' GYP. BD. BO. SIDES TO FLOOR ABOVE
9.81	PAINT EXPOSED STEEL ROOF STRUCTURE, DECKING & UTILITIES ABOVE
10.81	EXTERIOR SUN CONTROL DEVICE, SEE **20 / A824**
11.04	2 REEL HOSE/CABLE REELS FOR AIR, POWER, MOUNT AT +18'-0" OR AS INDICATED TO BOTTOM OF BEAM FLANGE, SEE SHEET A851
11.05	3 REEL HOSE/CABLE REELS FOR AIR, POWER AND 220 VOLTS , MOUNT AT +18'-0" TO BOTTOM, SEE SHEET A851
11.14	4 REEL HOSE/CABLE REELS FOR AIR, WATER, POWER AND 220 VOLTS, MOUNT AT +18'-0" TO BOTTOM, SEE SHEET A851
11.37	OVERHEAD PROJECTOR, SEE ELECTRICAL & STRUCTURAL FOR MOUNT
23.05	DUCT, SEE MECH, PAINT
23.06	LINEAR HEAT STRIPS, MOUNT AT 17'-6 TO BOTTOM, SEE ELECTRICAL
26.23	LED LINEAR LIGHT STRIPS, MOUNT AT +18' TO BOTTOM U.N.O., SEE ELECTRICAL
26.24	LED LINEAR LIGHT STRIPS, MOUNT TO UNDERSIDE OF CANOPY BEAM, SEE ELECTRICAL

LEGEND

- SUSPENDED ACOUSTIC PANEL CEILING SYS. SEE DETAIL **2 / A841**
- 5/8" TYPE "X" GYP. BD. O/ METAL CEILING JOISTS. SEE DETAIL **2 / A840**
- EXTERIOR CEMENT PLASTER SOFFIT O/ METAL CEILING JOISTS/FRAMING, SEE STRUCTURAL AND DETAIL **3 / A840**
- SUSPENDED METAL PANEL CEILING SYSTEM, SEE SHEET A842
- EXPOSED METAL DECK, TYP.
- ROOM 101 — ROOM SYMBOL
- 1'-0" — CEILING HEIGHT
- ELECTRICAL LIGHT FIXTURE, SEE ELECTRICAL.
- MECHANICAL GRILLES, SEE MECHANICAL.
- FIRE SPRINKLER HEAD & LINE SEE FIRE PROTECTION DRAWINGS
- ATTIC ACCESS DOOR 20" x 30" U.N.O. SEE DETAIL **12 / A840**
- DOTTED LINE ADJACENT TO WALL INDICATES 1-HR RATED CONSTUCTION. SEE SHEET A806 FOR FIRE RATED WALL ASSEMBLY, CEILING ASSEMBLY AND PENETRATION DETAILS.

GENERAL NOTES

A. CONTRACTOR SHALL PATCH, REPAIR OR REPLACE ANY ADJACENT WORK (WALL, CEILING, FLOOR SURFACES, ETC.) THAT IS DAMAGED, REMOVED AND/OR DEMOLISHED DURING THE COURSE OF CONSTRUCTION. SEE SPECIFICATION REQUIREMENTS FOR CUTTING & PATCHING.

B. FOR SUPPORT REQUIREMENTS FOR NEW LIGHT FIXTURES OR HVAC SYSTEM REGISTERS, SEE MECHANICAL AND ELECTRICAL

KEYPLAN

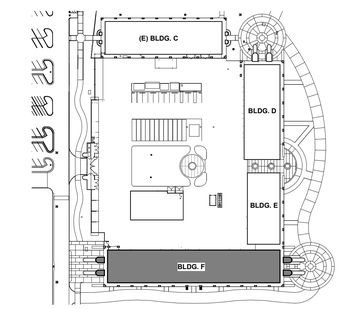

REFLECTED CEILING PLAN - BUILDING F

1/8" = 1'-0" | 10

PLOT DATE: 11/1/2022 10:04:59 PM

FOR BID ONLY

Teter, LLP expressly reserves its common law copyright and other property rights in these plans. This document, the ideas and designs incorporated herein, as an instrument of professional service, is not to be used in whole or part, for any other project without prior written authorization.

MARK	DATE	DESCRIPTION
	11/1/2022	DSA RESUBMITTAL

TETER, LLP
ARCHITECTS ENGINEERS CONSULTANTS
FRESNO HEADQUARTERS
VISALIA | BAKERSFIELD | MODESTO | SAN LUIS OBISPO

TULARE CAMPUS CTE
COLLEGE OF THE SEQUOIAS
4999 E. BARDSLEY AVE.
TULARE, CA

DRAWING TITLE
REFLECTED CEILING PLAN

PROJECT NO.
21-12032

DRAWING
A620

\\tetr-file1\Users\ryan.odom\Documents\12032-A-COS Tulare CTE_ryan.odomNLB27.rvt

ABBREVIATIONS

AA	ANODIZED ALUMINUM	PL	PLASTIC LAMINATE
AL	ALUMINUM	SC	SOLID CORE WOOD
ASF	ALUMINUM STOREFRONT	SG	SOUND/SAFETY GLASS (LAMINATED)
ACW	ALUMINUM CURTAIN WALL	SS	STAINLESS STEEL
FF	FACTORY FINISH	ST	STAIN & SEAL
GS	GALVANIZED STEEL	STL	STEEL
HM	HOLLOW METAL	TG	TEMPERED GLASS
IC	INSULATED CORE	TIG	TEMPERED INSULATED GLASS
KD	KNOCK-DOWN	WD	WOOD
P	PAINT		

GENERAL NOTES

1. DOORS SHALL BE READILY OPENABLE FROM THE EGRESS SIDE WITHOUT THE USE OF A KEY OR SPECIAL KNOWLEDGE OR EFFORT (CBC 1010.1.9). THE UNLATCHING OF ANY DOOR OR LEAF SHALL NOT REQUIRE MORE THAN ONE OPERATION (CBC 1010.1.9.6).
2. LEVERS, PULLS, LATCHES, LOCKS AND OTHER OPERATING DEVICES ON REQUIRED MEANS OF EGRESS DOORS SHALL COMPLY WITH SFM STANDARD 12-10-2, SECTION 12-10-202 CONTAINED IN THE CCR, TITLE 24, PART 12, CALIFORNIA REFERENCED STANDARDS CODE (CBC 1010.1.9.1).
3. HAND ACTIVATED DOOR OPERATING HARDWARE SHALL BE LEVER HANDLED OR PULLS THAT ARE EASY TO GRASP WITH ONE HAND AND DO NOT REQUIRE TIGHT GRASPING, PINCHING, OR TWISTING OF THE WRIST TO OPERATE. THE FORCE REQUIRED TO ACTIVATE OPERABLE PARTS SHALL BE 5 LBS MAXIMUM (CBC 1010.1.9.1, 11B-404.2.7 AND 11B-309.4).
4. OPERATING HARDWARE SHALL BE MOUNTED 34 INCHES MINIMUM AND 44 INCHES MAXIMUM ABOVE THE FINISHED FLOOR OR LANDING LEVEL (CBC 1010.1.9.2, 11B-404.2.7). IF NOT INDICATED OTHERWISE, INSTALL CENTERED AT +38".
5. MANUALLY OPERATED SURFACE OR FLUSH BOLTS ARE NOT PERMITTED EXCEPT FOR THE INACTIVE LEAF OF PAIRS OF DOORS SERVING STORAGE OR EQUIPMENT ROOMS, OR SERVING B, F OR S OCCUPANCIES HAVING AN OCCUPANT LOAD OF LESS THAN 50 OCCUPANTS (CBC 1010.1.9.5).
6. IF A DOOR HAS A CLOSER, THE CLOSER SHALL BE ADJUSTED SO THAT FROM AN OPEN POSITION OF 90 DEGREES, THE TIME REQUIRED TO MOVE THE DOOR TO A POSITION OF 12 DEGREES FROM THE LATCH IS 5 SECONDS MINIMUM (CBC11B-404.2.8.1). CLOSERS SHALL BE ADJUSTED SO THAT THE FORCE REQUIRED TO PUSH OR PULL OPEN A DOOR SHALL NOT EXCEED 5 LBS. FOR INTERIOR AND EXTERIOR DOORS AND NOT MORE THAN 15 LBS. FOR REQUIRED FIRE RATED DOORS. FOR SWINGING DOORS, THE FORCE SHALL BE APPLIED PERPENDICULAR TO THE DOOR AT THE DOOR OPERATING HARDWARE; FOR SLIDING DOORS, THE FORCE SHALL BE MEASURED PARALLEL TO THE DOOR APPLIED AT THE PULL OR LATCH (CBC 11B-404.2.9).
7. THRESHOLDS AT DOORWAYS SHALL NOT EXCEED 1/2 INCH IN HEIGHT ABOVE THE LOWEST FLOOR OR LANDING LEVEL. CHANGES IN ELEVATION GREATER THAN 1/4 INCH SHALL BE BEVELED WITH A SLOPE NOT GREATER THAN 2:1 HORIZONTAL TO VERTICAL (CBC 11B-404.2.5, 11B-303, AND 1010.1.7).
8. THE BOTTOM 10 INCHES OF THE PUSH SIDE OF SWINGING DOORS SHALL HAVE A SMOOTH UNINTERRUPTED SURFACE TO ALLOW THE DOOR TO BE OPENED BY A WHEEL CHAIR FOOTREST WITHOUT CREATING TRAP OR HAZARDOUS CONDITION (CBC 11B-404.2.10).
9. GLAZING IN AND ADJACENT TO DOORS SHALL BE TEMPERED SAFETY GLASS, LAMINATED SAFETY GLASS OR OTHER APPROVED SAFETY GLAZING MATERIAL (CBC 2406.4.1). SAFETY GLAZING SHALL BE PERMANENTLY IDENTIFIED IN ACCORDANCE WITH CBC 2406.3). SEE WINDOW SCHEDULE, SHEET A701 & INTERIOR/EXTERIOR ELEVATIONS & SPECIFICATIONS FOR TYPE OF GLASS TO PROVIDE.
10. VISION LITES IN DOORS SHALL HAVE THE BOTTOM EDGE OF VISIBLE GLASS 43 INCHES MAXIMUM ABOVE THE FLOOR (CBC 11B-404.2.11)
11. ALL DOORS SHALL BE 1-3/4 INCHES THICK UNLESS NOTED OTHERWISE.
12. ALL DOORS OVER 48 INCHES IN WIDTH SHALL BE PAIRS OF DOORS UNLESS NOTED OTHERWISE.
13. REFER TO INTERIOR FINISH SCHEDULE FOR COLOR/GLOSS/ PATTERN FOR PAINTED DOOR AND FRAME FINISHES.
14. FIRE RATED DOOR/FRAME ASSEMBLIES SHALL BE LABELED BY AN APPROVED AGENCY AND HAVE LABELS COMPLYING WITH NFPA 80 PERMANENTLY AFFIXED TO THE DOOR AND FRAME (CBC 716.2.9). FIRE RATED DOOR/FRAME ASSEMBLIES SHALL BE SELF CLOSING AND POSITIVE LATCHING (CBC 716.2.6.1).

REMARKS

A. ACCESS CONTROLED DOOR, SEE ELECTRICAL DWGS. (ALL DOORS WITH LOCKS)

B. NON-ACCESSIBLE DOOR, ACCESS TO CONCEALED SPACE, ACCESS BY SERVICE PERSONNEL ONLY.

C. ALUMINUM CURTAIN WALL FRAME, REFER TO WINDOW TYPES, (A701) FOR FRAME ELEVATION

DOOR TYPES N.T.S.

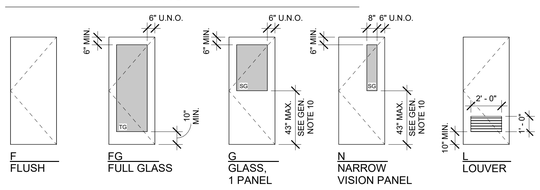

F — FLUSH

FG — FULL GLASS

G — GLASS, 1 PANEL

N — NARROW VISION PANEL

L — LOUVER

FOR DOOR GLAZING REFER TO DOOR SCHEDULE GENERAL NOTE #9 AND FOR GLASS TYPES REFER TO GLAZING NOTES ON SHEET A701.

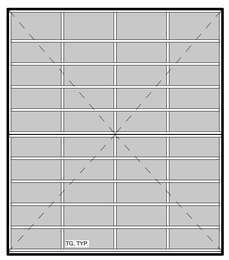

OH
OVERHEAD
UPWARD ACTING BI-FOLD
MOTOR OPERATED
1" TEMPERED GLASS (GICT - SEE SPECS)

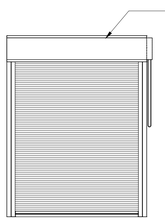

SD
SERVICE DOOR
OVERHEAD COILING
CHAIN OPERATED

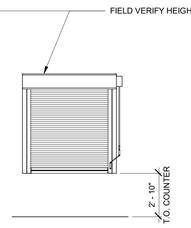

CD
COUNTER DOOR
OVERHEAD COILING
HAND CRANK OPERATED

TYPICAL DOOR FRAME PROFILES

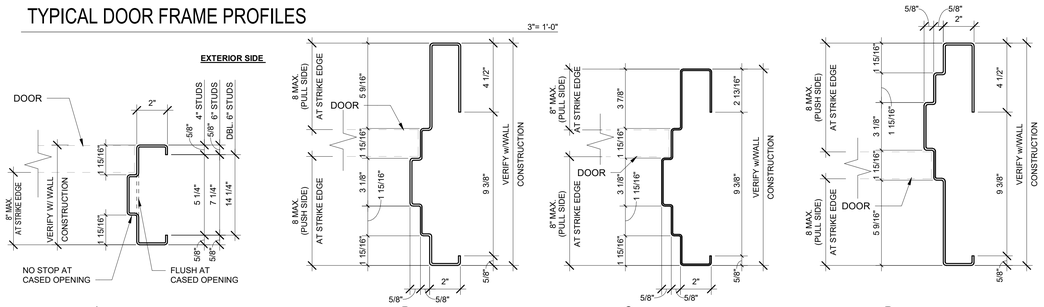

A
INTERIOR HOLLOW METAL DOOR FRAME PROFILE: 4" & 6" STUDS WALLS & SEE SHEET A813 FOR ACOUSTICAL DOORS & FRAMES AT EQUIPMENT PLATFORMS

B
EXTERIOR HOLLOW METAL DOUBLE RABBET DOOR FRAME PROFILE: 8" STUD WALLS W/ METAL SIDING FINISHES

C
EXTERIOR HOLLOW METAL DOUBLE RABBET DOOR FRAME PROFILE: 8" STUD WALLS W/ PLASTER FINISH

D
EXTERIOR HOLLOW METAL DOUBLE RABBET DOOR FRAME PROFILE: 8" STUD WALLS W/ METAL SIDING FINISHES IN-SWING DOOR

DOOR SCHEDULE - BUILDING D

MARK	DOOR WIDTH	DOOR HEIGHT	DOOR TYPE	DOOR MATL	DOOR FINISH	FRAME TYPE	FRAME FINISH	ASSEMBLY FIRE RATING (MINUTES)	HARDWARE GROUP	DETAILS HEAD	DETAILS JAMB	DETAILS THRESHOLD	REMARKS	NOTES
D1A	3' - 0"	8' - 0"	L	HM	P	HM-1D	P		27	6 / A811	7 / A811	8 / A811		
D2A	3' - 0"	8' - 0"	L	HM	P	HM-1D	P		27	6 / A811	7 / A811	8 / A811		
D2B	2' - 6"	7' - 0"	F	HM	P	HM-1A	P		01	8 / A812	9 / A812	--	B	
D3A	3' - 6"	8' - 0"	L	HM	P	HM-1B	P		02	1 / A811	2 / A811	13 / A810		
D4A	3' - 0"	8' - 0"	G	HM	P	HM-4	P		07	17 / A812	17 / A812 & 10 / A812	--		
D5A	3' - 0"	8' - 0"	G	HM	P	HM-4	P		07	17 / A812	17 / A812 & 10 / A812	--		
D6A	3' - 0"	8' - 0"	FG	AL	FF	ASW-1	FF		08	11 / A810	12 / A810	13 / A810	C	
D6B	6' - 0"	8' - 0"	FG	AL	FF	ASW-2	FF		18	11 / A810	12 / A810	--	C	
D8A	3' - 0"	8' - 0"	N	HM	P	HM-1C	P		23	20 / A811	10 / A811 & 5 / A811	13 / A810		
D8B	14' - 0"	16' - 0"	OH	AL	FF	CUSTOM HSS	P		--	3 / A815	15 / A815	5 / A815		
D8C	14' - 0"	16' - 0"	OH	AL	FF	CUSTOM HSS	P		--	3 / A815	15 / A815	5 / A815		
D8D	14' - 0"	16' - 0"	OH	AL	FF	CUSTOM HSS	P		--	3 / A815	15 / A815	5 / A815		
D8E	14' - 0"	16' - 0"	OH	AL	FF	CUSTOM HSS	P		--	3 / A815	15 / A815	5 / A815		
D8F	3' - 0"	8' - 0"	N	HM	P	HM-1C	P		23	20 / A811	10 / A811 & 5 / A811	13 / A810		
D8G	3' - 0"	8' - 0"	FG	AL	FF	ACW-1	FF		24	11 / A810	12 / A810	13 / A810	C	
D8H	3' - 0"	8' - 0"	FG	AL	FF	ACW-1	FF		24	11 / A810	12 / A810	13 / A810	C	
D8J	3' - 0"	8' - 0"	FG	AL	FF	ACW-1	FF		24	11 / A810	12 / A810	13 / A810	C	
D9A	3' - 6"	8' - 0"	F	HM	P	HM-1A	P		04	8 / A812	9 / A812	--		
D9B	8' - 0"	10' - 0"	SD	STL	FF	CUSTOM H.M.	P		--	12 / A813	13 / A813	BULB SEAL		CASED OPENING
D10A	3' - 6"	8' - 0"	F	HM	P	HM-1A	P		04	8 / A812	9 / A812	--		
D10B	5' - 0"	5' - 4"	CD	STL	FF	HM-3C	P		--	27 / A812	28 / A812	29 / A812		BULB SEAL DOOR BOTTOM
D11A	3' - 0"	8' - 0"	L	HM	P	HM-1B	P		25	1 / A811	2 / A811	13 / A810	B	
D12A	3' - 0"	8' - 0"	F	HM	P	HM-1B	P		09	1 / A811	2 / A811	13 / A810	B	
D13A	3' - 0"	8' - 0"	F	AL	FF	ACW-1	FF		24	11 / A810	12 / A810	13 / A810	C	
D13B	3' - 0"	8' - 0"	N	HM	P	HM-1C	P		23	20 / A811	5 / A811	13 / A810		
D13C	3' - 0"	8' - 0"	N	HM	P	HM-5	P		19	10 / A812	7 / A812	--		
D14A	3' - 0"	8' - 0"	FG	AL	FF	ACW-1	FF		24	11 / A810	12 / A810	13 / A810	C	
D14B	3' - 0"	8' - 0"	FG	AL	FF	ACW-1	FF		24	11 / A810	12 / A810	13 / A810	C	
D21A	2 PAIR 6' - 0"	6' - 8"	F	HM	P	HM-2A	P		22	1 / A813	2 / A813	4 / A813	B	ACOUSTICAL

DOOR SCHEDULE - BUILDING E

MARK	DOOR WIDTH	DOOR HEIGHT	DOOR TYPE	DOOR MATL	DOOR FINISH	FRAME TYPE	FRAME FINISH	ASSEMBLY FIRE RATING (MINUTES)	HARDWARE GROUP	DETAILS HEAD	DETAILS JAMB	DETAILS THRESHOLD	REMARKS	NOTES
E1A	3' - 0"	8' - 0"	FG	AL	FF	ACW-1	FF		24	11 / A810	12 / A810	13 / A810	C	
E1B	3' - 0"	8' - 0"	FG	AL	FF	ACW-1	FF		24	11 / A810	12 / A810	13 / A810	C	
E2A	3' - 0"	8' - 0"	G	HM	P	HM-4	P		07	17 / A812	17 / A812 & 10 / A812	--		
E3A	4' - 0"	8' - 0"	F	HM	P	HM-1C	P		10	20 / A811	5 / A811	13 / A810		
E3B	4' - 0"	8' - 0"	F	HM	P	HM-1A	P		11	17 / A812	17 / A812	--		
E4A	4' - 0"	8' - 0"	N	HM	P	HM-1A	P		12	17 / A812	17 / A812	--		
E5A	3' - 0"	8' - 0"	G	HM	P	HM-4	P		07	17 / A812	17 / A812 & 10 / A812	--		
E6A	3' - 0"	8' - 0"	G	HM	P	HM-4	P		07	17 / A812	17 / A812 & 10 / A812	--		
E8A	3' - 6"	8' - 0"	F	HM	P	HM-1A	P		13	8 / A812	9 / A812	1/4" x 4" SADDLE	B	ACOUSTICAL
E9A	4' - 0"	8' - 0"	L	HM	P	HM-1B	P		26	1 / A811	2 / A811	13 / A810		
E10A	4' - 0"	8' - 0"	F	HM	P	HM-1B	P		10	1 / A811	2 / A811	13 / A810		
E11A	3' - 0"	8' - 0"	FG	AL	FF	ACW-1	FF		24	11 / A810	12 / A810	13 / A810	C	
E11B	3' - 0"	8' - 0"	FG	AL	FF	ACW-1	FF		24	11 / A810	12 / A810	13 / A810	C	
E11C	18' - 0"	16' - 0"	OH	AL	FF	CUSTOM HSS	P		--	3 / A815	15 / A815	5 / A815		
E11D	3' - 6"	8' - 0"	F	HM	P	HM-1C	P		14	20 / A811	10 / A811 & 5 / A811	13 / A810		
E21A	2 PAIR 6' - 0"	6' - 8"	F	HM	P	HM-2A	P		22	1 / A813	2 / A813	4 / A813	B	ACOUSTICAL

DOOR SCHEDULE - BUILDING F

MARK	DOOR WIDTH	DOOR HEIGHT	DOOR TYPE	DOOR MATL	DOOR FINISH	FRAME TYPE	FRAME FINISH	ASSEMBLY FIRE RATING (MINUTES)	HARDWARE GROUP	DETAILS HEAD	DETAILS JAMB	DETAILS THRESHOLD	REMARKS	NOTES
F1A	3' - 0"	8' - 0"	L	HM	P	HM-1D	P		27	6 / A811	7 / A811	8 / A811		
F1B	2' - 6"	7' - 0"	F	HM	P	HM-1A	P		01	8 / A812	9 / A812	--	B	
F2A	3' - 0"	8' - 0"	F	HM	P	HM-1D	P		05	6 / A811	7 / A811	8 / A811		
F3A	3' - 0"	8' - 0"	N	HM	P	HM-1C	P		23	20 / A811	5 / A811	13 / A810		
F3B	18' - 0"	16' - 0"	OH	AL	FF	CUSTOM HSS	FF		--	3 / A815	15 / A815	5 / A815		
F3C	3' - 0"	8' - 0"	FG	AL	FF	ACW-1	FF		24	11 / A810	12 / A810	13 / A810	C	
F4A	3' - 0"	8' - 0"	G	HM	P	HM-4	P		15	17 / A812	17 / A812 & 10 / A812	--		
F5A	3' - 0"	8' - 0"	G	HM	P	HM-4	P		15	17 / A812	17 / A812 & 10 / A812	--		
F6A	2' - 6"	7' - 0"	F	HM	P	HM-1	P		21	8 / A812	9 / A812	--	B	
F8A	3' - 0"	8' - 0"	G	HM	P	HM-5	P		19	10 / A812	10 / A812 & 9 / A812	--		
F8B	3' - 0"	8' - 0"	G	HM	P	HM-5	P		19	10 / A812	10 / A812 & 9 / A812	--		
F8C	3' - 0"	8' - 0"	FG	AL	FF	ACW-1	FF		24	11 / A810	12 / A810	13 / A810	C	
F9A	3' - 0"	8' - 0"	N	HM	P	HM-1C	P		23	20 / A811	5 / A811	13 / A810		
F9B	18' - 0"	16' - 0"	OH	AL	FF	CUSTOM HSS	P		--	3 / A815	15 / A815	5 / A815		
F9C	3' - 0"	8' - 0"	FG	AL	FF	ACW-1	FF		24	11 / A810	12 / A810	13 / A810	C	
F10A	3' - 0"	8' - 0"	F	HM	P	HM-1C	P		23	20 / A811	5 / A811	13 / A810		
F10B	7' - 0"	10' - 0"	SD	STL	FF	CUSTOM H.M.	P		--	12 / A813	13 / A813	BULB SEAL		CASED OPENING
F10C	18' - 0"	16' - 0"	OH	AL	FF	CUSTOM HSS	P		--	3 / A815	15 / A815	5 / A815		
F10D	4' - 0"	8' - 0"	F	HM	P	HM-1C	P		16	20 / A811	5 / A811	13 / A810		
F10E	3' - 0"	8' - 0"	FG	AL	FF	ACW-1	FF		24	11 / A810	12 / A810	13 / A810	C	
F10F	3' - 0"	8' - 0"	FG	AL	FF	ACW-1	FF		24	11 / A810	12 / A810	13 / A810	C	
F11A	3' - 0"	8' - 0"	G	HM	P	HM-4	P		15	17 / A812	17 / A812 & 10 / A812	--		
F12A	3' - 0"	8' - 0"	F	HM	P	HM-1C	P		09	20 / A811	10 / A811 & 5 / A811	13 / A810		
F14A	3' - 0"	8' - 0"	F	HM	P	HM-1A	P	60	03	8 / A812	9 / A812	1/4" x 4" SADDLE		
F17A	3' - 0"	8' - 0"	F	HM	P	HM-1A	P		17	8 / A812	9 / A812	--		
F18A	4' - 0"	8' - 0"	L	HM	P	HM-1B	P		26	1 / A811	2 / A811	13 / A810		
F19A	3' - 6"	8' - 0"	N	HM	P	HM-1C	P		14	20 / A811	10 / A811 & 5 / A811	13 / A810		
F19B	18' - 0"	16' - 0"	OH	AL	FF	CUSTOM HSS	P		--	3 / A815	15 / A815	5 / A815		
F19C	3' - 0"	8' - 0"	FG	AL	FF	ACW-1	FF		24	11 / A810	12 / A810	13 / A810	C	
F20A	3' - 0"	8' - 0"	G	HM	P	HM-4	P		07	17 / A812	17 / A812 & 10 / A812	--		
F21A	3' - 0"	8' - 0"	G	HM	P	HM-4	P		07	17 / A812	17 / A812 & 10 / A812	--		
F22A	4' - 0"	8' - 0"	L	HM	P	HM-1B	P		10	1 / A811	2 / A811	13 / A810		
F23A	3' - 0"	8' - 0"	F	HM	P	HM-1B	P		06	1 / A811	2 / A811	13 / A810		
F24A	3' - 0"	8' - 0"	L	HM	P	HM-1B	P		09	1 / A811	2 / A811	13 / A810		
F25A	3' - 0"	8' - 0"	F	HM	P	HM-1B	P		06	1 / A811	2 / A811	13 / A810		
F26A	3' - 0"	8' - 0"	N	HM	P	HM-5	P		19	10 / A812	10 / A812 & 9 / A812	--		
F26B	3' - 0"	8' - 0"	N	HM	P	HM-5	P		19	10 / A812	10 / A812 & 9 / A812	--		
F26C	3' - 0"	8' - 0"	FG	AL	FF	ACW-1	FF		08	11 / A810	12 / A810	13 / A810	C	
F27A	3' - 0"	8' - 0"	G	HM	P	HM-1A	P		07	8 / A812	9 / A812	--		
F28A	3' - 0"	8' - 0"	FG	AL	FF	ACW-1	FF		08	11 / A810	12 / A810	13 / A810	C	
F29A	3' - 0"	8' - 0"	FG	AL	FF	ACW-1	FF		08	11 / A810	12 / A810	13 / A810	C	
F29B	3' - 0"	8' - 0"	F	HM	P	HM-1A	P		07	8 / A812	9 / A812	--		
F30A	3' - 0"	8' - 0"	L	HM	P	HM-1B	P		27	6 / A811	7 / A811	8 / A811		
F30B	2' - 6"	7' - 0"	F	HM	P	HM-1A	P		01	8 / A812	9 / A812	--	B	
F32A	3' - 0"	8' - 0"	F	HM	P	HM-1B	P		20	6 / A811	7 / A811	8 / A811		
F40A	2 PAIR 6' - 0"	6' - 8"	F	HM	P	HM-2A	P		22	1 / A813	2 / A813	4 / A813	B	ACOUSTICAL
F41A	2 PAIR 6' - 0"	6' - 8"	F	HM	P	HM-2A	P		22	6 / A813	7 / A813	4 / A813	B	ACOUSTICAL
F42A	2 PAIR 6' - 0"	6' - 8"	F	HM	P	HM-2A	P		22	6 / A813	7 / A813	4 / A813	B	ACOUSTICAL

DOOR FRAME TYPES N.T.S.

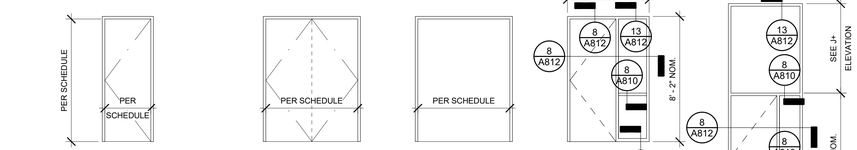

HM-1A
HOLLOW METAL PROFILE 'A' SINGLE DOOR SINGLE SWING

HM-1B
HOLLOW METAL PROFILE 'B' SINGLE DOOR SINGLE SWING

HM-1C
HOLLOW METAL PROFILE 'C' SINGLE DOOR SINGLE SWING

HM-1D
HOLLOW METAL PROFILE 'D' SINGLE DOOR SINGLE SWING

ACW-1
ALUMINUM CURTAINWALL SINGLE DOOR SINGLE SWING

HM-2A
HOLLOW METAL PAIR OF DOORS SINGLE SWING

ACW-2
ALUMINUM CURTAINWALL PAIR OF DOORS SINGLE SWING

HM-3C
HOLLOW METAL FRAME PROFILE 'A' CASED OPENING (NO DOOR(S))

HM-4
SIDELITE HOLLOW METAL FRAME PROFILE 'A' SINGLE DOOR SINGLE SWING ALL GLAZING IS 3/8" CLEAR LAMINATED SOUND/SAFETY GLASS

HM-5
SIDELITE HOLLOW METAL TRANSOM LITE SINGLE DOOR SINGLE SWING SEE WINDOW TYPE J & J+ ALL GLAZING IS 3/8" CLEAR LAMINATED SOUND/SAFETY GLASS

PLOT DATE: 11/1/2022 10:05:10 PM

FOR BID ONLY

Tetr; LLP expressly reserves its common law copyright and other property rights in these plans. This document, the ideas and designs incorporated herein, as an instrument of professional service, is not to be used in whole or in part, for any other project without prior written authorization.

MARK	DATE	DESCRIPTION
	11/1/2022	DSA RESUBMITTAL

TETER, LLP
ARCHITECTS ENGINEERS CONSULTANTS
FRESNO HEADQUARTERS
VISALIA | BAKERSFIELD | MODESTO | SAN LUIS OBISPO

TULARE CAMPUS CTE
COLLEGE OF THE SEQUOIAS
4999 E. BARDSLEY AVE.
TULARE, CA

DRAWING TITLE
DOOR SCHEDULE

PROJECT NO.
21-12032

DRAWING
A700

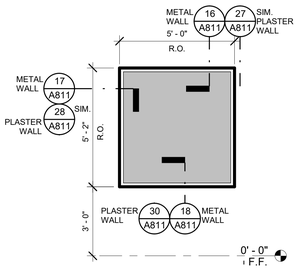

A HOLLOW METAL (EXTERIOR)

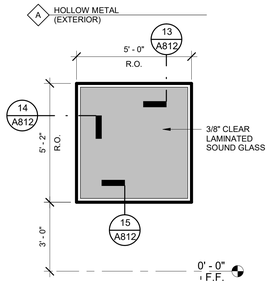

A1 HOLLOW METAL (INTERIOR)

NOTE: FOR TRANSLUCENT PANEL MECHANICAL SCREEN ABOVE SEE EXTERIOR ELEVATIONS AND 17/A831

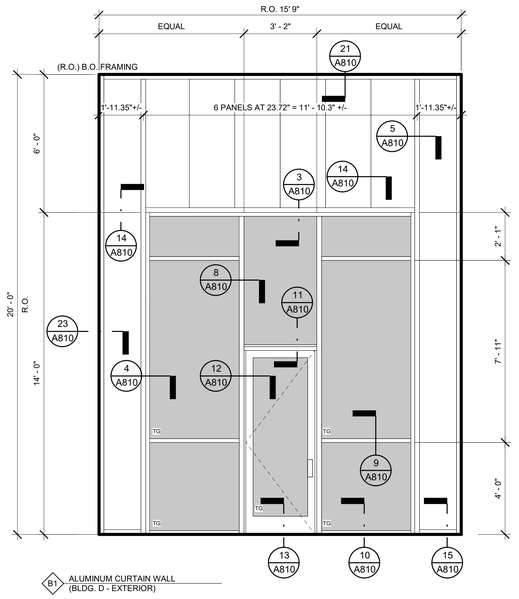

B1 ALUMINUM CURTAIN WALL (BLDG. D - EXTERIOR)

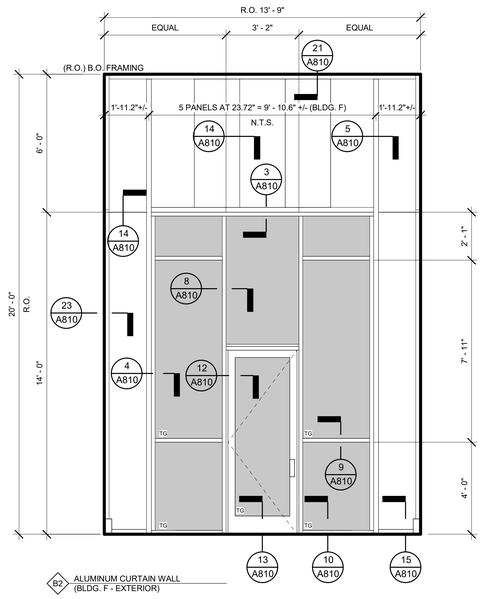

B2 ALUMINUM CURTAIN WALL (BLDG. F - EXTERIOR)

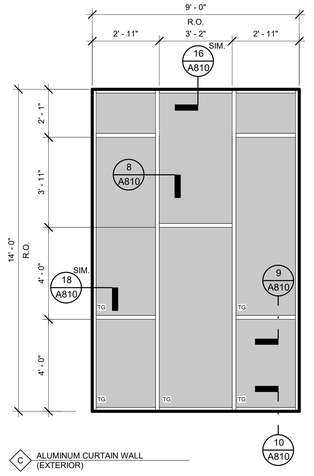

C ALUMINUM CURTAIN WALL (EXTERIOR)

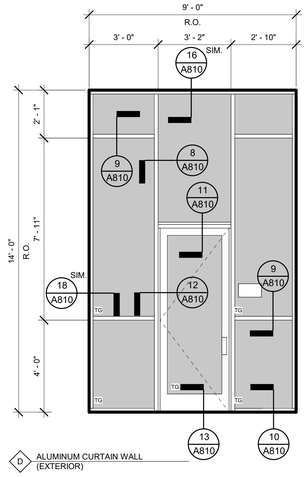

D ALUMINUM CURTAIN WALL (EXTERIOR)

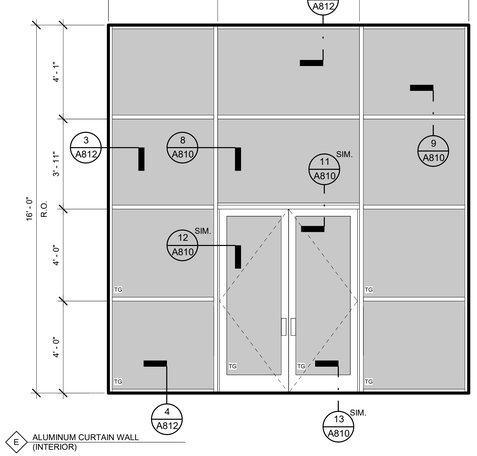

E ALUMINUM CURTAIN WALL (INTERIOR)
(VIEWED FROM DISPLAY SPACE, ROOM D6)

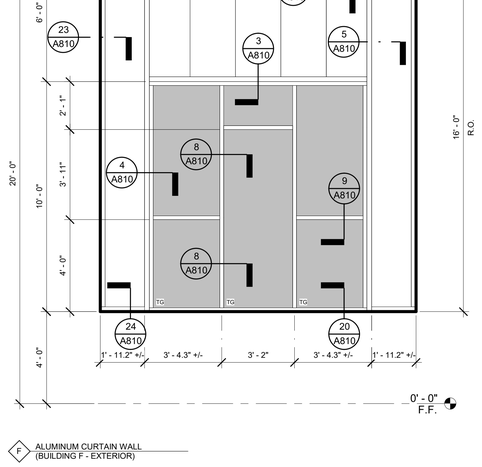

F ALUMINUM CURTAIN WALL (BUILDING F - EXTERIOR)

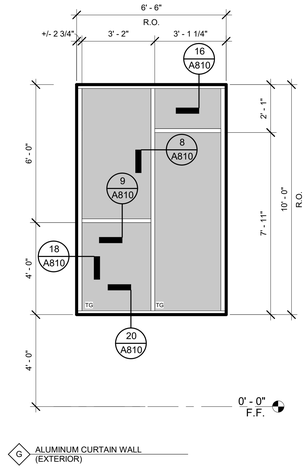

G ALUMINUM CURTAIN WALL (EXTERIOR)

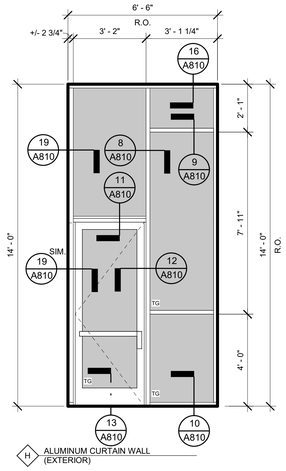

H ALUMINUM CURTAIN WALL (EXTERIOR)

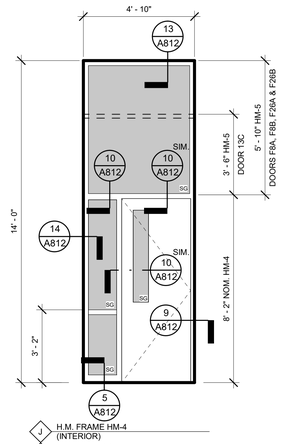

J H.M. FRAME HM-4 (INTERIOR)
J+ WITH TRANSOM LITE (HM-5)
ALL GLAZING IS 3/8" CLEAR LAMINATED SOUND/SAFETY GLASS

WINDOW TYPES

GENERAL NOTES

1. GLAZING IN HAZARDOUS LOCATIONS PER CBC 2406.4 SHALL BE TEMPERED SAFETY GLASS OR LAMINATED SAFETY GLASS. HAZARDOUS LOCATIONS SHALL INCLUDE BUT BE LIMITED TO GLAZING IN WINDOWS ADJACENT TO DOORS AND WITHIN 24-INCHES OF VERTICAL EDGE OF A DOOR IN A CLOSED POSITION.
2. EACH LITE OF TEMPERED OR LAMINATED SAFETY GLASS SHALL HAVE A PERMANENT IDENTIFICATION LABEL WHICH SHALL BE VISIBLE WHEN THE LIGHT IS INSTALLED. GLAZING PANELS REQUIRED TO BE TEMPERED SAFETY GLASS ARE INDICATED WITH "TG". LAMINATED SAFETY GLASS IS INDICATED WITH "SG".
3. SEE DOOR SCHEDULE A700 AND GLAZING TYPES SCHEDULE FOR GLAZING FOR DOORS & SIDELIGHTS.

GLAZING TYPES

1. EXTERIOR - 1" LOW-E COATED, CLEAR INSULATING GLASS. FULLY TEMPERED WHERE INDICATED ON WINDOW ELEVATIONS
2. INTERIOR - 1" CLEAR INSULATING GLASS, FULLY TEMPERED WHERE INDICATED ON WINDOW ELEVATIONS, INCLUDING AT ALL ALUMINUM CURTAIN WALL WINDOWS. PROVIDE 3/8" CLEAR LAMINATED SOUND GLASS AT DOORS & SURROUNDING/ADJACENT GLAZING AT OFFICES, CLASSROOMS AND WHERE SPECIFICALLY INDICATED, INCLUDING ALL DOOR NARROW LITES.
3. SEE SPEC SECTION 088000 "GLAZING" FOR ADDITIONAL INFORMATION

QUANTITY BY WINDOW TYPE (VERIFY)

A	9	EXTERIOR H.M.
A.1	1	INTERIOR H.M.
B1	1	(w/ DOOR)
B2	1	(w/ DOOR)
C	2	
D	19	(w/ DOOR)
E	1	(w/ DOUBLE DOOR) INTERIOR
F	1	
G	1	
H	1	(w/ DOOR)
J	10	INTERIOR H.M. (OFFICES)
J+	1	INTERIOR H.M. (CLASSROOM, 11' - 8" H.)
	4	INTERIOR H.M. (CLASSROOM, 14' - 0" H.)
TOTAL	52	WINDOW OPENINGS

PLOT DATE: 11/1/2022 10:05:26 PM

\\tetr-file1\Users\ryan.odom\Documents\12032-A-COS Tulare CTE_ryan.odomNLB27.rvt

FOR BID ONLY

Teter, LLP expressly reserves its common law copyright and other property rights in these plans. This document, the ideas and designs incorporated herein, as an instrument of professional service, is not to be used in whole or in part, for any other project without prior written authorization.

MARK	DATE	DESCRIPTION
	11/1/2022	DSA RESUBMITTAL

LICENSED ARCHITECT RYAN N. ODOM C-29243 STATE OF CALIFORNIA

TETER, LLP
ARCHITECTS ENGINEERS CONSULTANTS
FRESNO HEADQUARTERS
VISALIA | BAKERSFIELD | MODESTO | SAN LUIS OBISPO

TETER

TULARE CAMPUS CTE
COLLEGE OF THE SEQUOIAS
4999 E. BARDSLEY AVE.
TULARE, CA

DRAWING TITLE
WINDOW SCHEDULE

PROJECT NO.
21-12032

DRAWING
A701

\\tetr-file1\Users\ryan.odom\Documents\12032-A-COS Tulare CTE_ryan.odomNLB27.rvt

FINISH SCHEDULE BLDG D

ROOM NO.	ROOM NAME	Floor	Base	Wainscot		WALLS								CEILING			REMARKS
						NORTH		EAST		SOUTH		WEST					
		MATERIAL	MATERIAL	MATERIAL	HEIGHT	MATERIAL	FINISH	MATERIAL	FINISH	MATERIAL	FINISH	MATERIAL	FINISH	MATERIAL	FINISH	HEIGHT	
D1	LACTATION	CPT	RB	-	-	GB	PT	GB	PT	GB	PT	GB	PT	GB	PT	12'-0"	
D2	GENDER NEUTRAL R.R.	CT	-	CT	8'-0"	CT	P-S	CT	P-S	GB	P-S	GB	P-S	GB	P-S	12'-0"	
D2.1	MAINTENANCE	CS	RB	-	-	GB	PT	GB	PT	GB	PT	GB	PT	EX	PT	-	
D3	MECH. STORAGE	CS	RB	-	-	GB	P-S	GB	P-S	GB	P-S	GB	P-S	GB	P-S	12'-0"	
D4	OFFICE	CS	RB	-	-	GB	PT	GB	PT	GB	PT	GB	PT	ACP-1	FF	10'-0"	
D5	OFFICE	CS	RB	-	-	GB	PT	GB	PT	GB	PT	GB	PT	ACP-1	FF	10'-0"	
D6	DISPLAY SPACE	CP	RB	-	-	GB	PT	GB	PT	GB	PT	GB	PT	PMC-1	FF/PT ABV	16'-0"	
D7	STORAGE	CP	CC	-	-	GB	PT	GB	PT	GB	PT	GB	PT	EX	PT	-	
D8	AUTOMOTIVE TECHNOLOGY	CP	CC	PW	12'-0 1/2"	GB/PW	PT	GB/PW	PT	GB/PW	PT	GB/PW	PT	EX	PT	-	
D9	STORAGE	CP	CC	-	-	GB	PT	GB	PT	GB	PT	GB	PT	GB	PT	12'-0"	
D10	STORAGE	CP	CC	-	-	GB	PT	GB	PT	GB	PT	GB	PT	GB	PT	12'-0"	
D11	ELEC.	CS	CC	-	-	PW	PT	GB	PT	PW	PT	GB	PT	GB	PT	12'-0"	
D12	COMM.	CS	CC	-	-	GB	PT	GB	PT	GB	PT	GB	PT	GB	PT	12'-0"	
D13	COMPUTER LAB	CP	RB	-	-	GB	PT	GB	PT	GB	PT	GB	PT	EX	PT	-	
D14	COMPUTER LAB	CP	RB	-	-	GB	PT	GB	PT	GB	PT	GB	PT	EX	PT	-	
D21	EQUIPMENT PLATFORM	PWFR	-	-	-	GB	PT	GB	PT	GB	PT	GB	PT	EX	PT	-	

FINISH SCHEDULE BLDG E

ROOM NO.	ROOM NAME	Floor	Base	Wainscot		WALLS								CEILING			REMARKS
						NORTH		EAST		SOUTH		WEST					
		MATERIAL	MATERIAL	MATERIAL	HEIGHT	MATERIAL	FINISH	MATERIAL	FINISH	MATERIAL	FINISH	MATERIAL	FINISH	MATERIAL	FINISH	HEIGHT	
E1	INDUSTRIAL AUTOMATION TECHNOLOGY	CP	RB	-	-	GB	PT	GB	PT	GB	PT	GB	PT	PMC-1	FF/PT ABV	14'-0"	
E2	OFFICE	CS	RB	-	-	GB	PT	GB	PT	GB	PT	GB	PT	ACP-1	FF	10'-0"	
E3	STORAGE	CS	RB	-	-	GB	PT	GB	PT	GB	PT	GB	PT	GB	PT	12'-0"	
E4	INDUSTRIAL AUTOMATION ROBOTICS	CP	RB	-	-	GB	PT	GB	PT	GB	PT	GB	PT	PMC-1	FF/PT ABV	14'-0"	
E5	OFFICE	CS	RB	-	-	GB	PT	GB	PT	GB	PT	GB	PT	ACP-1	FF	10'-0"	
E6	OFFICE	CS	RB	-	-	GB	PT	GB	PT	GB	PT	GB	PT	ACP-1	FF	10'-0"	
E7	STORAGE	CP	CC	-	-	GB	PT	GB	PT	GB	PT	GB	PT	GB	PT	12'-0"	
E8	COMPRESSOR	CS	CC	-	-	GB	PT	GB	PT	GB	PT	GB	PT	GB	PT	12'-0"	
E9	ELEC.	CS	CC	-	-	PW	PT	GB	PT	PW	PT	GB	PT	GB	PT	12'-0"	
E10	COMM.	CS	CC	-	-	GB	PT	GB	PT	GB	PT	GB	PT	GB	PT	12'-0"	
E11	AGRICULTURAL MECHANICS	CP	CC	PW	12'-8"	GB/PW	PT	GB/PW	PT	GB/PW	PT	GB/PW	PT	EX	PT	-	
E21	EQUIPMENT PLATFORM	PWFR	-	-	-	GB	PT	GB	PT	GB	PT	GB	PT	EX	PT	-	

FINISH SCHEDULE BLDG F

ROOM NO.	ROOM NAME	Floor	Base	Wainscot		WALLS								CEILING			REMARKS
						NORTH		EAST		SOUTH		WEST					
		MATERIAL	MATERIAL	MATERIAL	HEIGHT	MATERIAL	FINISH	MATERIAL	FINISH	MATERIAL	FINISH	MATERIAL	FINISH	MATERIAL	FINISH	HEIGHT	
F1	GENDER NEUTRAL R.R.	CT	CT	CT	8'-0"	CT	FF	CT	FF	CT	FF	CT	FF	GB	PT	12'-0"	
F1.1	MAINTENANCE	CS	RB	-	-	GB	PT	GB	PT	GB	PT	GB	PT	EX	PT	-	
F2	STORAGE	CS	CC	-	-	GB	PT	GB	PT	GB	PT	GB	PT	GB	PT	12'-0"	
F3	CONSTRUCTION TECHNOLOGY	CP	CONC	PW	12'-8"	GB/PW	PT	GB/PW	PT	GB/PW	PT	GB/PW	PT	EX	PT	-	
F4	OFFICE	CS	RB	-	-	GB	PT	GB	PT	GB	PT	GB	PT	ACP-1	FF	10'-0"	
F5	OFFICE	CS	RB	-	-	GB	PT	GB	PT	GB	PT	GB	PT	ACP-1	FF	10'-0"	
F6	STORAGE	CP	CC	-	-	GB/PW	PT	GB/PW	PT	GB	PT	-	-	GB	PT	12'-0"	
F7	STORAGE	CP	C	-	-	GB/PW	PT	-	-	GB/PW	PT	GB/PW	PT	GB	PT	12'-0"	
F8	CLASSROOM	CP	RB	-	-	GB	PT	GB	PT	GB	PT	GB	PT	EX	PT	-	
F9	ELECTRICIAN TRAINING	CP	CC	PW	12'-8"	GB/PW	PT	GB/PW	PT	GB/PW	PT	GB/PW	PT	EX	PT	-	
F10	ENVIRONMENTAL CONTROLS LAB	CP	CC	PW	12'-8"	GB/PW	PT	GB/PW	PT	GB/PW	PT	GB/PW	PT	EX	PT	-	
F10A	STORAGE	CP	RB			GB	PT	GB	PT	GB	PT	GB	PT	EX		-	
F11	OFFICE	CS	RB	-	-	GB	PT	GB	PT	GB	PT	GB	PT	ACP-1	FF	10'-0"	
F12	COMM.	CS	CC	-	-	GB	PT	GB	PT	GB	PT	GB	PT	GB	PT	12'-0"	
F13	STORAGE	CP	RB	-	-	GB	PT	GB	PT	GB	PT	GB	PT	GB	PT	12'-0"	
F14	ACET. GAS STOR.	CS	CC	-	-	GB	PT	GB	PT	GB	PT	GB	PT	GB	PT	12'-0"	
F15	STORAGE	CP	CC	-	-	GB	PT	GB	PT	GB	PT	GB	PT	GB	PT	12'-0"	
F16	STORAGE	CP	CC	-	-	GB/PW	PT	GB/PW	PT	GB/PW	PT	GB/PW	PT	GB	PT	12'-0"	
F17	GAS STORAGE	CS	CC	-	-	GB	PT	GB	PT	GB	PT	GB	PT	GB	PT	12'-0"	
F18	ELEC	CS	CC	-	-	PW	PT	PW	PT	GB	PT	PW	PT	GB	PT	12'-0"	
F19	INDUSTRIAL MAINTENANCE LAB	CP	CC	PW	12'-8"	GB/PW	PT	GB/PW	PT	GB/PW	PT	GB/PW	PT	EX	PT	-	
F20	OFFICE	CS	RB	-	-	GB	PT	GB	PT	GB	PT	GB	PT	GB	PT	12'-0"	
F21	OFFICE	CS	RB	-	-	GB	PT	GB	PT	GB	PT	GB	PT	ACP-1	FF	10'-0"	
F22	COMPRESSOR	CS	CC	-	-	GB	PT	GB	PT	GB	PT	GB	PT	ACP-1	FF	10'-0"	
F23	MEN	CT	-	CT	8'-2"	CT	FF	GB	PS	CT	FF	CT	FF	GB	PT	12'-0"	
F24	JANITOR	CS	CC	-	-	GB	PT	GB	PS	GB	PT	GB	PT	GB	PT	12'-0"	
F25	WOMEN	CT	-	CT	8'-2"	CT	FF	GB	PS	CT	FF	CT	FF	GB	PT	12'-0"	
F26	CLASSROOM	CP	RB	-	-	GB	PT	GB	PT	GB	PT	GB	PT	EX	PT	-	
F27	DEAN'S OFFICE	CPT	RB	-	-	GB	PT	GB	P-E	GB	PT	CT	PT	ACP-2	FF	14'-0"	
F28	ASSISTANT/ PRINT/COPY	CPT	RB/SS	-	-	GB	PT	GB	P-E	GB	PT	GB	PT	ACP-1	FF	14'-0"	
F29	MEETING	CPT	RB	-	-	GB	PT	GB	P-E	GB	PT	GB	PT	ACP-2/GB	FF/PT	14'-0"	
F30	GENDER NEUTRAL R.R.	CT	-	CT	8'-0"	CT	FF	CT	FF	CT	FF	CT	FF	GB	PT	12'-0"	
F31	MAINTENANCE	CS	RB	-	-	GB	PT	GB	PT	GB	PT	GB	PT	EX	PT	-	
F32	STORAGE	CS	CC	-	-	GB	PT	GB	PT	GB	PT	GB	PT	GB	PT	12'-0"	
F40	EQUIPMENT PLATFORM	PWFR	-	-	-	GB	PT	GB	PT	GB	PT	GB	PT	EX	PT	-	
F41	EQUIPMENT PLATFORM	PWFR	-	-	-	GB	PT	GB	PT	GB	PT	GB	PT	EX	PT	-	
F42	EQUIPMENT PLATFORM	PWFR	-	-	-	GB	PT	GB	PT	GB	PT	GB	PT	EX	PT	-	

ABBREVIATIONS

ABV	ABOVE
ACP-1	2x4 SUSPENDED ACOUSTIC CEILING PANELS & GRID
ACP-2	2x2 SUSPENDED ACOUSTIC CEILING PANELS & GRID
CC	8" CONCRETE CURB (MATCH ADJACENT FLOOR FINISH)
C-P	CONCRETE, POLISHED (SEE SPECS)
C-S	CONCRETE, SEALED (CLEAN, GRIND (2), POLISH (2)
CPT	CARPET
CT	CERAMIC TILE
EX	EXPOSED FRAMING (DRAYFALL PAINT ABOVE 18')
FF	FACTORY FINISH
FRP	FIBER REINFORCED PLASTIC PANEL
GB	GYPSUM BOARD
FCB	FIBER CEMENT BOARD
PL	PLASTER CEMENT
PMC-1	PERFORATED METAL CEILING PANELS
P-E	PAINT EGG SHELL
P-S	PAINT SEMI-GLOSS
P-TS	PAINT TRANSPARENT STAIN (TINTED)
PW	PLYWOOD (PANELING)
PWFR	PLYWOOD FIRE RETARDANT TREATED (TINTED SEALER/STAIN)
RB	4" RESILIENT BASE
SS	STAINLESS STEEL
VCT	VINYL COMPOSITION TILE

FINISH SCHEDULE GENERAL NOTES

A. ALL INTERIOR WALL AND CEILING FINISHES SHALL COMPLY WITH CBC SECTION 803, AND HAVE A FLAME SPREAD INDEX NO GREATER THAN SPECIFIED IN CBC TABLE 803.13 FOR THE OCCUPANCY GROUP AND LOCATION DESGNATED
B. SEE INTERIOR ELEVATIONS FOR EXTENT OF FINISH MATERIALS
C. ALL COLORS TO BE SELECTED BY ARCHITECT AT A LATER DATE

REMARKS

PLOT DATE: 11/1/2022 10:05:34 PM

FOR BID ONLY

Teter, LLP expressly reserves its common law copyright and other property rights in these plans. This document, the ideas and designs incorporated herein, as an instrument of professional service, is not to be used in whole or part, for any other project without prior written authorization.

MARK	DATE	DESCRIPTION
	11/1/2022	DSA RESUBMITTAL

LICENSED ARCHITECT ★ VINDICATUS ★ JOHN C. COUPER ★ 23993 ★ STATE OF CALIFORNIA

TETER, LLP
ARCHITECTS ENGINEERS CONNECTED
FRESNO HEADQUARTERS
VISALIA | BAKERSFIELD | MODESTO | SAN LUIS OBISPO

TETER

TULARE CAMPUS CTE
COLLEGE OF THE SEQUOIAS
4999 E. BARDSLEY AVE.
TULARE, CA

DRAWING TITLE
FINISH SCHEDULE

PROJECT NO.
21-12032

DRAWING
A710

ATTENDANT ASSISTANCE SIGN (AAS)

1. SEE INTERIOR ELEVATION FOR POSTED LOCATION.

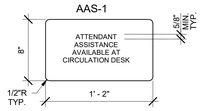

FIRE SPRINKLER ROOM SIGN (FS)

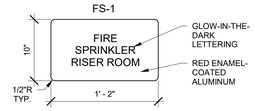

NO SMOKING SIGN (NS)

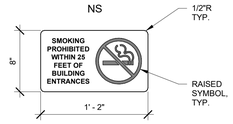

CAUTION HOT WORK SIGN (CHW)

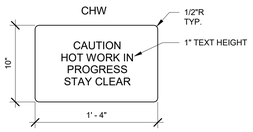

ROOM CAPACITY SIGN (RC)

SINGLE PURPOSE ROOM

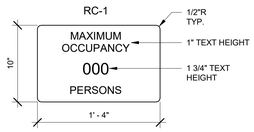

ASSISTED LISTENING DEVICE (ALS)

1. SEE FLOOR PLANS FOR REQUIRED SPACES AND LOCATION.

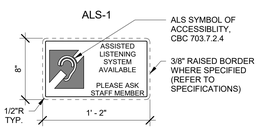

TABLE 11B-703.5.5 (VISUAL CHARACTER HEIGHT)		
HEIGHT TO FINISH FLOOR OR GROUND FROM BASELINE OF CHARACTER	HORIZONTAL VIEWING DISTANCE	MINIMUM CHARACTER HEIGHT
40 INCHES TO LESS THAN OR EQUAL TO 70 INCHES	LESS THAN 72 INCHES	5/8 INCHES
	72 INCHES AND GREATER	5/8 INCHES, PLUS 1/8 INCH PER FOOT OF VIEWING DISTANCE ABOVE 72 INCHES
GREATER THAN 70 INCHES TO LESS THAN OR EQUAL TO 120 INCHES	LESS THAN 180 INCHES	2 INCHES
	180 INCHES AND GREATER	2 INCHES, PLUS 1/8 INCH PER FOOT OF VIEWING DISTANCE ABOVE 180 INCHES
GREATER THAN 120 INCHES	LESS THAN 21 FEET	3 INCHES
	21 FEET AND GREATER	3 INCHES, PLUS 1/8 INCH PER FOOT OF VIEWING DISTANCE ABOVE 21 FOOT

GENERAL NOTES:

1. INFORMATIONAL SIGNAGE SHALL COMPLY WITH CBC 11B-703.5
2. INFORMATIONAL SIGNS ARE NOT REQUIRED TO HAVE RAISED CHARACTERS AND ACCOMPANYING BRAILLE.
3. LETTERING TO BE 3/4" HIGH MIN. U.N.O.

FINISH AND CONTRAST (CBC 11B-703.5.1): VISUAL CHARACTERS AND THEIR BACKGROUND SHALL HAVE A NON-GLARE FINISH. CHARACTERS SHALL CONTRAST WITH THEIR BACKGROUND WITH EITHER LIGHT CHARACTERS ON A DARK BACKGROUND OR DARK CHARACTERS ON A LIGHT BACKGROUND.

CASE (CBC 11B-703.5.2): CHARACTERS SHALL BE UPPERCASE OR LOWERCASE OR A COMBINATION OF BOTH.

STYLE (CBC 11B-703.5.3): CHARACTERS SHALL BE CONVENTIONAL IN FORM. CHARACTERS SHALL NOT BE ITALIC, OBLIQUE, SCRIPT, HIGHLY DECORATIVE, OR OF OTHER UNUSUAL FORMS.

CHARACTER PROPORTIONS (CBC 11B-703.5.4): CHARACTERS SHALL BE SELECTED FROM FONTS WHERE THE WIDTH OF THE UPPERCASE LETTER "O" IS 60 PERCENT MINIMUM AND 110 PERCENT MAXIMUM OF THE HEIGHT OF THE UPPERCASE LETTER "I".

CHARACTER HEIGHT (CBC 11B-703.5.5): MINIMUM CHARACTER HEIGHT SHALL COMPLY WITH TABLE 11B-703.5.5. VIEWING DISTANCE SHALL BE MEASURED AS THE HORIZONTAL DISTANCE BETWEEN THE CHARACTER AND AN OBSTRUCTION PREVENTING FURTHER APPROACH TOWARDS THE SIGN. CHARACTER HEIGHT SHALL BE BASED ON THE UPPERCASE LETTER "I".

STROKE THICKNESS (CBC 11B-703.5.7): STROKE THICKNESS OF THE UPPERCASE LETTER "I" SHALL BE 10 PERCENT MINIMUM AND 20 PERCENT MAXIMUM OF THE HEIGHT OF THE CHARACTER.

CHARACTER SPACING (CBC 11B-703.5.8): CHARACTER SPACING SHALL BE MEASURED BETWEEN THE TWO CLOSEST POINTS OF ADJACENT CHARACTERS, EXCLUDING WORD SPACES. SPACING BETWEEN INDIVIDUAL CHARACTERS SHALL BE 10 PERCENT MINIMUM AND 35 PERCENT MAXIMUM OF CHARACTER HEIGHT.

LINE SPACING (CBC 11B-703.5.9): SPACING BETWEEN THE BASELINES OF SEPARATE LINES OF CHARACTERS WITHIN A MESSAGE SHALL BE 135 PERCENT MINIMUM AND 170 PERCENT MAXIMUM OF THE CHARACTER HEIGHT.

FORMAT (CBC 11B-703.5.10): TEXT SHALL BE IN A HORIZONTAL FORMAT.

PICTOGRAMS (CBC 11B-703.6): PICTOGRAMS SHALL HAVE A FIELD HEIGHT OF 6 INCHES MINIMUM, CHARACTERS AND BRAILLE SHALL NOT BE LOCATED IN THE PICTOGRAM FIELD. PICTOGRAMS AND THEIR FIELD SHALL HAVE A NON-GLARE FINISH, PICTOGRAMS SHALL CONTRAST WITH THEIR FIELD WITH EITHER A LIGHT PICTOGRAM ON A DARK FIELD OR A DARK PICTOGRAM ON A LIGHT FIELD. PICTOGRAMS SHALL HAVE TEXT DESCRIPTORS LOCATED DIRECTLY BELOW THE PICTOGRAM FIELD AND BRAILLE TRANSLATION BELOW TEXT DESCRIPTION, TEXT DESCRIPTORS SHALL COMPLY WITH CBC SECTIONS 11B-703.2, 11B-703.3, AND 11B-703.4.1.

SRH_12_2019

INFORMATIONAL SIGNAGE — 1 1/2" = 1'-0" — 18

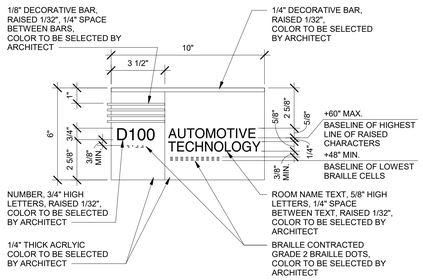

TYPICAL ROOM IDENTIFICATION SIGN

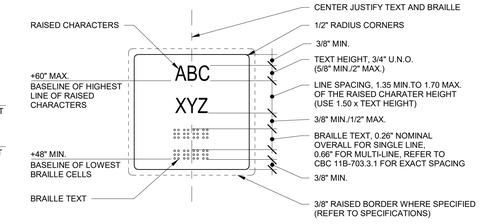

TYPICAL TACTILE EXIT SIGN

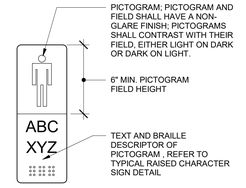

SIGN WITH PICTOGRAM

TYPICAL ROOM IDENTIFICATION

WALL MOUNTED TOILET SIGNAGE AT ACCESSIBLE TOILETS (TRW)

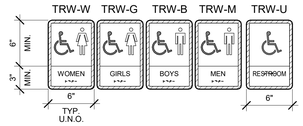

WALL MOUNTED ACCESSIBLE ACCESS SIGN (ISA)

SYMBOL SHALL COMPLY WITH CBC 11B-703.7.2.1

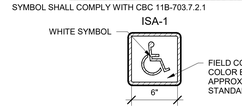

WALL MOUNTED IDENTIFICATION SIGNAGE @ FUNCTIONAL ROOMS (RN)

COORDINATE ROOM NAME AND NUMBER WITH OWNER PRIOR TO FABRICATION. DO NOT USE IDENTIFICATION FOUND ON THE DRAWINGS, U.N.O.

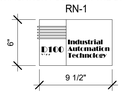

WALL MOUNTED TACTILE EXIT SIGN (TE)

1. EXIT DOOR LEADS DIRECTLY TO GRADE LEVEL EXTERIOR EXIT, SIGN TO STATE: "EXIT"

2. EACH EXIT ACCESS DOOR FROM AN INTERIOR ROOM OR AREA THAT IS REQUIRED TO HAVE A VISUAL EXIT SIGN, SHALL BE IDENTIFIED BY A TACTILE EXIT SIGN WITH THE WORDS, "EXIT ROUTE."

NOTES:

GENERAL: SIGNAGE SHALL COMPLY WITH CBC SECTION 11B-703, RAISED CHARACTER SIGNS SHALL COMPLY WITH CBC 11B-703.2, 11B-703.3 AND 11B-703.4

RAISED CHARACTERS (CBC 11B-703.2): RAISED CHARACTERS (TEXT) SHALL COMPLY WITH CBC SECTION 11B-703.2 AND SHALL BE DUPLICATED IN BRAILLE. RAISED CHARACTERS SHALL BE UPPER CASE AND BE RAISED 1/32-INCH MINIMUM ABOVE THEIR BACKGROUND. CHARACTERS SHALL BE SANS SERIF AND NOT BE ITALIC, OBLIQUE, SCRIPT, HIGHLY DECORATIVE, OR OTHER UNUSUAL FORMS. CHARACTERS SHALL BE SELECTED FROM FONTS WHERE THE WIDTH OF THE UPPERCASE LETTER "O" IS 60 PERCENT MINIMUM AND 110 PERCENT MAXIMUM OF THE HEIGHT OF THE UPPERCASE LETTER "I". CHARACTER HEIGHT MEASURED VERTICALLY FROM THE BASELINE OF THE CHARACTER SHALL BE 5/8-INCH MINIMUM AND 2 INCHES MAXIMUM BASED ON THE HEIGHT OF THE UPPERCASE LETTER "I". STROKE THICKNESS OF THE UPPERCASE LETTER "I" SHALL BE 15 PERCENT MAXIMUM OF THE HEIGHT OF THE CHARACTER. TEXT SHALL BE IN A HORIZONTAL FORMAT. CHARACTERS AND THEIR BACKGROUND SHALL HAVE A NON-GLARE FINISH. CHARACTERS SHALL CONTRAST WITH THEIR BACKGROUND WITH EITHER LIGHT CHARACTERS ON A DARK BACKGROUND OR DARK CHARACTERS ON A LIGHT BACKGROUND.

BRAILLE (CBC 11B-703.3): BRAILLE SHALL BE CONTRACTED (GRADE 2) AND SHALL COMPLY WITH CBC SECTIONS 11B-703.3. BRAILLE DOTS SHALL HAVE A DOMED OR ROUNDED SHAPE AND SHALL COMPLY WITH CBC TABLE 703.3.1. BRAILLE SHALL BE POSITIONED BELOW THE CORRESPONDING TEXT IN A HORIZONTAL FORMAT, CENTER JUSTIFIED. IF TEXT IS MULTI-LINED, BRAILLE SHALL BE PLACED BELOW THE ENTIRE TEXT. BRAILLE SHALL BE SEPARATED 3/8 INCH MINIMUM AND 1/2 INCH MAXIMUM FROM ANY OTHER TACTILE CHARACTERS AND 3/8 INCH MINIMUM AND FROM RAISED BORDERS AND DECORATIVE ELEMENTS.

MOUNTING HEIGHT (CBC 11B-703.4.1): TACTILE CHARACTERS ON SIGNS SHALL BE LOCATED 48 INCHES MINIMUM ABOVE THE FINISH FLOOR OR GROUND SURFACE, MEASURED FROM THE BASELINE OF THE LOWEST BRAILLE CELLS AND 60 INCHES MAXIMUM ABOVE THE FINISH FLOOR OR GROUND SURFACE, MEASURED FROM THE BASELINE OF THE HIGHEST LINE OF RAISED CHARACTERS.

LOCATION (CBC 11B-703.4.2): SIGNS SHALL BE LOCATED ALONGSIDE THE DOOR AT THE LATCH SIDE. WHERE A TACTILE SIGN IS PROVIDED AT DOUBLE DOORS WITH ONE ACTIVE LEAF, THE SIGN SHALL BE LOCATED ON THE INACTIVE LEAF. WHERE A TACTILE SIGN IS PROVIDED AT DOUBLE DOORS WITH TWO ACTIVE LEAFS, THE SIGN SHALL BE LOCATED TO THE RIGHT OF THE RIGHT HAND DOOR. WHERE THERE IS NO WALL SPACE AT THE LATCH SIDE OF A SINGLE DOOR OR AT THE RIGHT SIDE OF DOUBLE DOORS, SIGNS SHALL BE LOCATED ON THE NEAREST ADJACENT WALL. SIGNS CONTAINING TACTILE CHARACTERS SHALL BE LOCATED SO THAT A CLEAR FLOOR SPACE OF 18 INCHES MINIMUM BY 18 INCHES MINIMUM, CENTERED ON THE TACTILE CHARACTERS, IS PROVIDED BEYOND THE ARC OF ANY DOOR SWING BETWEEN THE CLOSED POSITION AND 45 DEGREE OPEN POSITION. WHERE PROVIDED, SIGNS IDENTIFYING PERMANENT ROOMS AND SPACES SHALL BE LOCATED AT THE ENTRANCE TO, AND OUTSIDE OF THE ROOM OR SPACE. WHERE PROVIDED, SIGNS IDENTIFYING EXITS SHALL BE LOCATED AT THE EXIT DOOR WHEN APPROACHED IN THE DIRECTION OF EGRESS TRAVEL.

PICTOGRAMS (CBC 11B-703.6): PICTOGRAMS SHALL HAVE A FIELD HEIGHT OF 6 INCHES MINIMUM, CHARACTERS AND BRAILLE SHALL NOT BE LOCATED IN THE PICTOGRAM FIELD. PICTOGRAMS AND THEIR FIELD SHALL HAVE A NON-GLARE FINISH, PICTOGRAMS SHALL CONTRAST WITH THEIR FIELD WITH EITHER A LIGHT PICTOGRAM ON A DARK FIELD OR A DARK PICTOGRAM ON A LIGHT FIELD. PICTOGRAMS SHALL HAVE TEXT DESCRIPTORS LOCATED DIRECTLY BELOW THE PICTOGRAM FIELD AND BRAILLE TRANSLATION BELOW TEXT DESCRIPTION, TEXT DESCRIPTORS SHALL COMPLY WITH CBC SECTIONS 11B-703.2, 11B-703.3, AND 11B-703.4.1.

SRH_12_2019

TYPICAL ROOM IDENTIFICATION AND TACTILE SIGNAGE — N.T.S. — 3

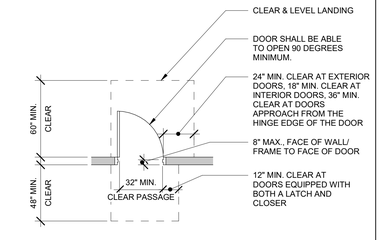

ACCESSIBLE MANEUVERING CLEARANCE AT DOORS — 1/4" = 1'-0" — 9

SRH_12_2019

TOILET ROOM DOOR IDENTIFICATION SYMBOL (TRD)

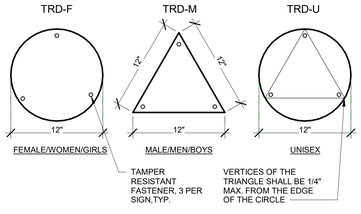

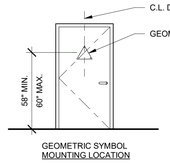

NOTES:

1. SYMBOLS SHALL BE 1/4" THICK; UNISEX SYMBOLS SHALL CONSIST OF A 1/4" THICK TRIANGLE ON A 1/4" THICK CIRCLE.
2. THE COLOR OF THE SYMBOL SHALL CONTRAST WITH THE COLOR OF THE DOOR; FOR UNISEX SIGNS, THE COLOR OF THE CIRCLE SHALL CONTRAST WITH THE DOOR AND THE COLOR OF THE TRIANGLE SHALL CONTRAST WITH THE CIRCLE; CONTRAST SHALL BE LIGHT ON DARK OR DARK ON LIGHT.
3. SYMBOLS SHALL NOT CONTAIN BRAILLE OR WRITTEN TEXT.
4. PICTOGRAMS ARE NOT A REQUIRED FEATURE BUT MAY BE INCLUDED. EXCEPT AT UNISEX RESTROOMS WHERE PICTORGRAMS SYMBOLS ARE NOT PERMITED.
5. EDGES OF SYMBOLS SHALL BE EASED OR ROUNDED AT 1/16" MINIMUM OR CHAMFERED AT 1/8" MAXIMUM. VERTICES OF TRIANGLES SHALL BE RADIUSED BETWEEN 1/8" MIN./ 1/4" MAX.
6. SYMBOLS SHALL BE LOCATED ON DOORS TO TOILET ROOMS, WHERE NO DOORS ARE PROVIDED, SYMBOLS SHALL BE LOCATED ON THE WALL ADJACENT TO THE ENTRANCE OPENING.

SRH_12_2019

GEOMETRIC SYMBOLS FOR TOILET ROOMS — 1 1/2" = 1'-0" — 5

PLOT DATE: 11/1/2022 10:05:37 PM

\\tet-file1\Users\ryan.odom\Documents\12032-A-COS Tulare CTE_ryan.odomNLB27.rvt

FOR BID ONLY

Teter, LLP expressly reserves its common law copyright and other property rights in these plans. This document, the ideas and designs incorporated herein, as an instrument of professional service, is not to be used in whole or in part, for any other project without prior written authorization.

MARK	DATE	DESCRIPTION
	11/1/2022	DSA RESUBMITTAL

TETER, LLP
FRESNO HEADQUARTERS
VISALIA | BAKERSFIELD | MODESTO | SAN LUIS OBISPO
ARCHITECTS ENGINEERS CONNECTED

TULARE CAMPUS CTE
COLLEGE OF THE SEQUOIAS
4999 E. BARDSLEY AVE.
TULARE, CA

DRAWING TITLE
TYPICAL SIGNAGE DETAILS

PROJECT NO.
21-12032

DRAWING
A800

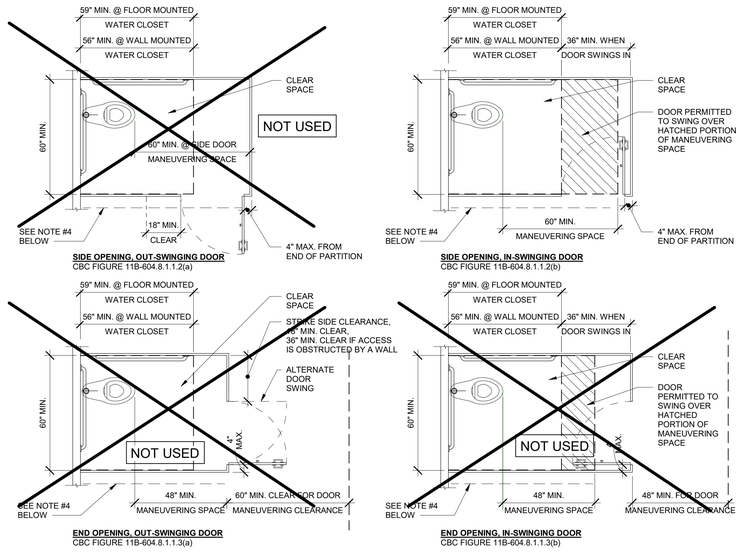

TOILET COMPARTMENT NOTES:
1. A 44" MIN. WIDTH ACCESIBLE ROUTE SHALL BE PROVIDED TO ACCESSIBLE TOILET COMPARTMENTS.
2. DOOR CLEAR WIDTH, 32" MIN. FOR END OPENING STALLS AND 34" MIN. FOR SIDE OPENING STALLS.
3. ACCESSIBLE STALL DOORS SHALL BE SELF CLOSING AND SHALL HAVE A PULL ON EACH SIDE OF THE DOOR NEAR THE LATCH, PULLS SHALL COMPLY WITH CBC 11B-404.2.7.
4. ADDITIONAL TOE CLEARANCE IS REQUIRED AT WIDE SIDE OF COMPARTMENT, 6" MIN. BEYOND INSIDE FACE OF COMPARTMENT BY 12" MIN. HIGH, MAY BE OBSTRUCTED BY PARTITION SUPPORT MEMBERS; PARTITION COMPONENTS AT TOE SPACE SHALL BE SMOOTH WITHOUT SHARP EDGES OR ABRASIVE SURFACES; TOE CLEARANCE IS NOT REQUIRED FOR COMPARTMENTS OF 66" MIN. WIDTH.

SRH_12_2019

TYPICAL TOILET COMPARTMENT CONFIGURATIONS

3/8" = 1'-0" | 22

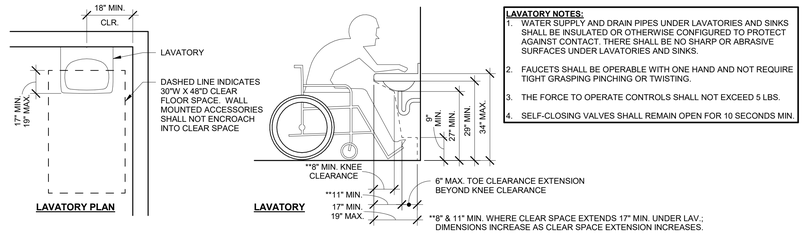

LAVATORY NOTES:
1. WATER SUPPLY AND DRAIN PIPES UNDER LAVATORIES AND SINKS SHALL BE INSULATED OR OTHERWISE CONFIGURED TO PROTECT AGAINST CONTACT. THERE SHALL BE NO SHARP OR ABRASIVE SURFACES UNDER LAVATORIES AND SINKS.
2. FAUCETS SHALL BE OPERABLE WITH ONE HAND AND NOT REQUIRE TIGHT GRASPING PINCHING OR TWISTING.
3. THE FORCE TO OPERATE CONTROLS SHALL NOT EXCEED 5 LBS.
4. SELF-CLOSING VALVES SHALL REMAIN OPEN FOR 10 SECONDS MIN.

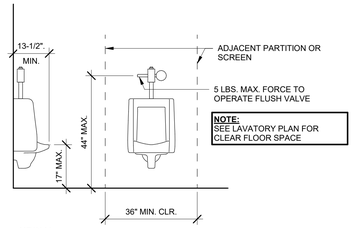

NOTE: SEE LAVATORY PLAN FOR CLEAR FLOOR SPACE

URINAL

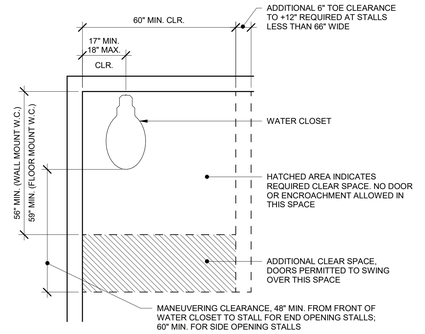

WATER CLOSET CLEAR SPACE

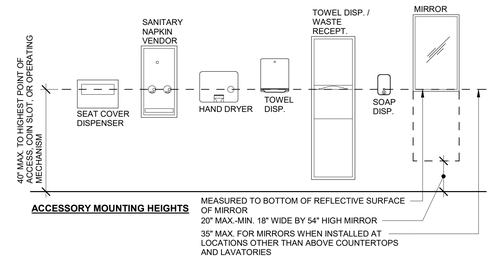

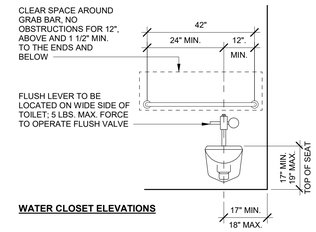

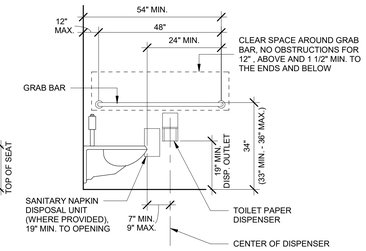

SRH_12_2019

ACCESSIBLE FIXTURE & ACCESSORY MOUNTING HEIGHTS & CLEARANCES

1/2" = 1'-0" | 2

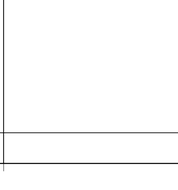

GENERAL NOTES:
1. BASIS OF DESIGN PRODUCT: KOALA KARE PRODUCTS, MODEL KB200, BABY DIAPER CHANGING STATION.
2. BABY DIAPER CHANGING STATION UNIT DIMENSIONS ARE NOMINAL. DIMENSIONS BASED ON BASIS OF DESIGN UNIT PER MANUFACTURER'S INFORMATION.
3. THE WHEELCHAIR CLEAR SPACE AT THE BABY DIAPER CHANGING STATION SHALL CONNECT TO A WHEELCHAIR ACCESSIBLE ROUTE.
4. BABY DIAPER CHANGING STATIONS, WHEN DEPLOYED (DOWN POSITION), SHALL NOT OBSTRUCT THE REQUIRED WIDTH OF AN ACCESSIBLE ROUTE.
5. OPERABLE PARTS SHALL BE OPERABLE WITH ONE HAND AND SHALL NOT REQUIRE TIGHT GRASPING, PINCHING, OR TWISTING OF THE WRIST. THE FORCE REQUIRED TO ACTIVATE OPERABLE PARTS SHALL BE 5 LBS MAXIMUM (REF. CBC 11B-309)
6. BABY DIAPER CHANGING STATIONS SHALL NOT BE LOCATED IN TOILET COMPARTMENTS OF MULTIPLE ACCOMMODATION TOILET ROOMS (CBC 11B-226.4)

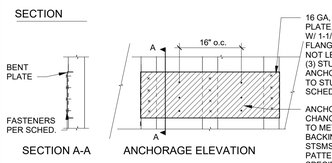

STUD TYPE	FASTENERS (PER STUD)
WOOD	(4) #10 WOOD SCREWS W/ 2" MIN. EMB. INTO STUD.
METAL	(4) #10 STSMS

NOTES:
1. SCREWS TO HAVE LOW PROFILE HEADS
2. SPACE FASTENERS 1" FROM EDGES AND EQUALLY SPACED IN BETWEEN.

SRH_12_2019

DIAPER CHANGING STATION 3/8" = 1'-0" | 19

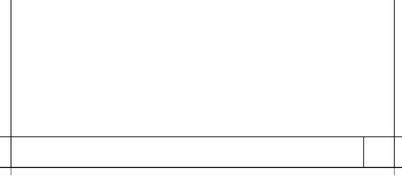

NOTES:
1. THE MANUAL MECHANISM FOR THE DRINKING FOUNTAIN SHALL BE FRONT MOUNTED OR SIDE MOUNTED AND LOCATED WITHIN 6" OF THE FRONT EDGE OF THE FOUNTAIN.
2. THE SPOUT SHALL PROVIDE A STREAM OF WATER AT LEAST 4" HIGH.
3. THE ANGLE OF THE WATER STREAM SHALL BE MEASURED HORIZONTALLY RELATIVE TO THE FRONT FACE OF THE UNIT. WHERE SPOUTS ARE LOCATED LESS THAN 3 INCHES FROM THE FRONT OF THE UNIT, THE ANGLE OF THE WATER STREAM SHALL BE 30 DEGREES MAXIMUM. WHERE SPOUTS ARE LOCATED BETWEEN 3 INCHES AND 5 INCHES MAXIMUM FROM THE FRONT OF THE UNIT, THE ANGLE OF THE WATER STREAM SHALL BE 15 DEGREES MAXIMUM.

SRH_12_2019

ACCESSIBLE DRINKING FOUNTAIN 1/2" = 1'-0" | 14

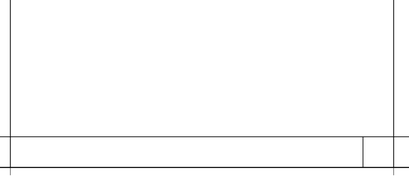

NOTES:
1. ACCESSIBLE SINKS SHALL COMPLY WITH C.B.C. SECTION 11B-606 AND 11B-305. A MIN. 30"x48" CLEAR SPACE SHALL BE PROVIDED IN FRONT OF THE SINK TO ALLOW FOR A FORWARD APPROACH. A MIN. 30" WIDE CLEAR SPACE SHALL EXTEND A MIM. OF 19" UNDERNEATH THE COUNTER.
2. WATER SUPPLY AND DRAIN PIPES SHALL BE INSULATED OR OTHERWISE CONFIGURED TO PROTECT AGAINST CONTACT. THERE SHALL BE NO SHARP OR ABRASIVE SURFACES UNDER SINKS.
3. FAUCETS AND CONTROLS SHALL BE OPERABLE WITH ONE HAND AND SHALL NOT REQUIRE TIGHT GRASPING, PINCHING, OR TWISTING OF THE WRIST. THE FORCE REQUIRED TO OPERATE CONTROLS SHALL NOT EXCEED A 5 LB. FORCE. SELF CLOSING VALVES SHALL REMAIN OPEN FOR AT LEAST 10 SECONDS.

SRH_12_2019

ACCESSIBLE SINK KNEE/TOE CLEARANCE 3/4" = 1'-0" | 8

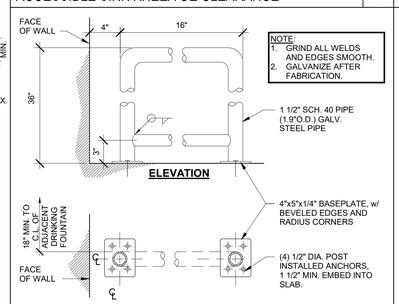

NOTE:
1. GRIND ALL WELDS AND EDGES SMOOTH.
2. GALVANIZE AFTER FABRICATION.

PIPE GUARD 1 1/2" = 1'-0" | 9

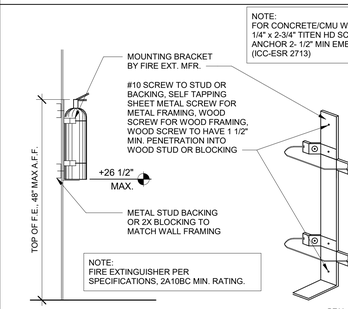

NOTE:
1. AT SHOWER LOCATIONS (IF ANY) SEAL FASTENER PENETRATIONS WITH SILICONE SEALANT.
2. GRAB BARS SHALL NOT ROTATE WITHIN THEIR FITTINGS.
3. GRAB BARS AND ANY WALL OR OTHER SURFACE ADJACENT TO GRAB BARS SHALL BE FREE OF SHARP OR ABRASIVE ELEMENTS AND SHALL HAVE ROUNDED EDGES.
4. THERE SHALL BE NO PROJECTING ELEMENTS MOUNTED TO WALLS WITHIN 12" ABOVE OR 1-1/2" BELOW GRAB BARS.

TYPICAL GRAB BAR ANCHORAGE 3" = 1'-0" | 3

FIRE EXTINGUISHER BRACKET 12" = 1'-0" | 4

SRH_12_2019

PLOT DATE: 11/1/2022 10:05:41 PM

\\tetr-file1\Users\ryan.odom\Documents\12032-A-COS Tulare CTE_ryan.odomNLB27.rvt

Teter, LLP expressly reserves its common law copyright and other property rights in these plans. This document, the ideas and designs incorporated herein, as an instrument of professional service, is not to be used in whole or in part, for any other project without prior written authorization.

FOR BID ONLY

MARK	DATE	DESCRIPTION
	11/1/2022	DSA RESUBMITTAL

TETER, LLP
FRESNO HEADQUARTERS
VISALIA | BAKERSFIELD | MODESTO | SAN LUIS OBISPO
ARCHITECTS ENGINEERS CONNECTED

TULARE CAMPUS CTE
COLLEGE OF THE SEQUOIAS
4999 E. BARDSLEY AVE.
TULARE, CA

DRAWING TITLE
TYPICAL ACCESSIBILITY AND CLEARANCES

PROJECT NO.
21-12032

DRAWING
A801

\\tetr-file1\Users\ryan.odom\Documents\12032-A-COS Tulare CTE_ryan.odomNLB27.rvt

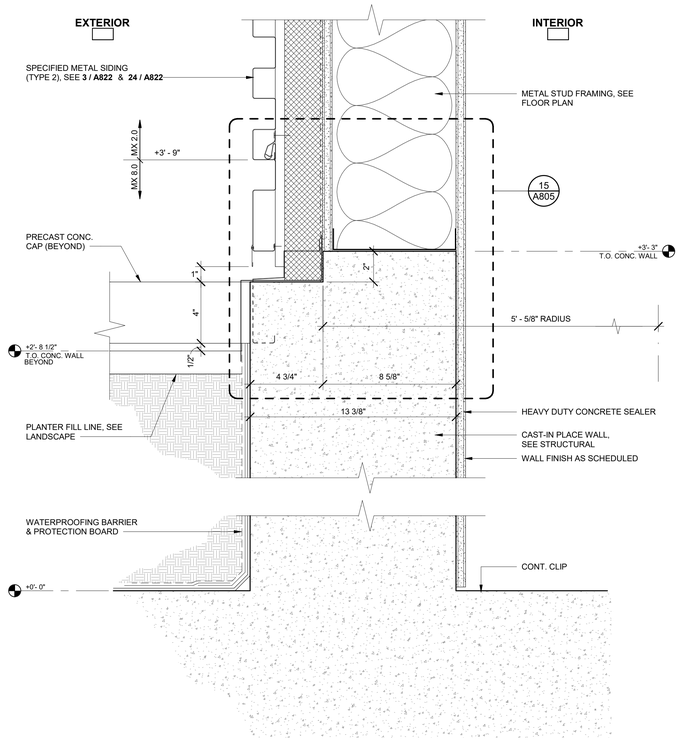

CONCRETE WALL BETWEEN PLANTER & VERTICAL ENTRY ELEMENT — 3" = 1'-0" — 12

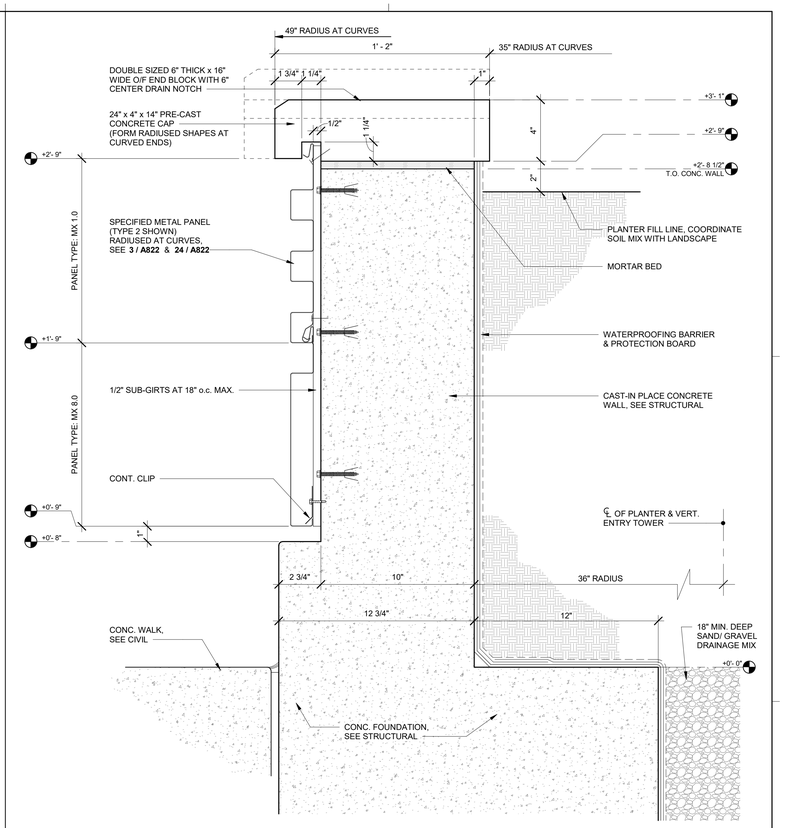

PLANTER WALL SIDING & CAP — 3" = 1'-0" — 2

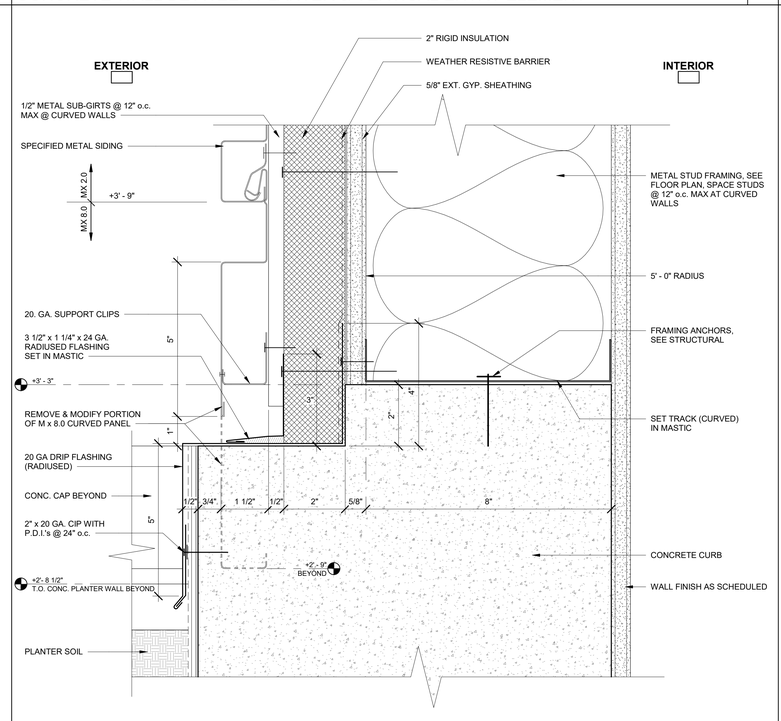

METAL SIDING AT PLANTER & WALL CURB — 6" = 1'-0" — 15

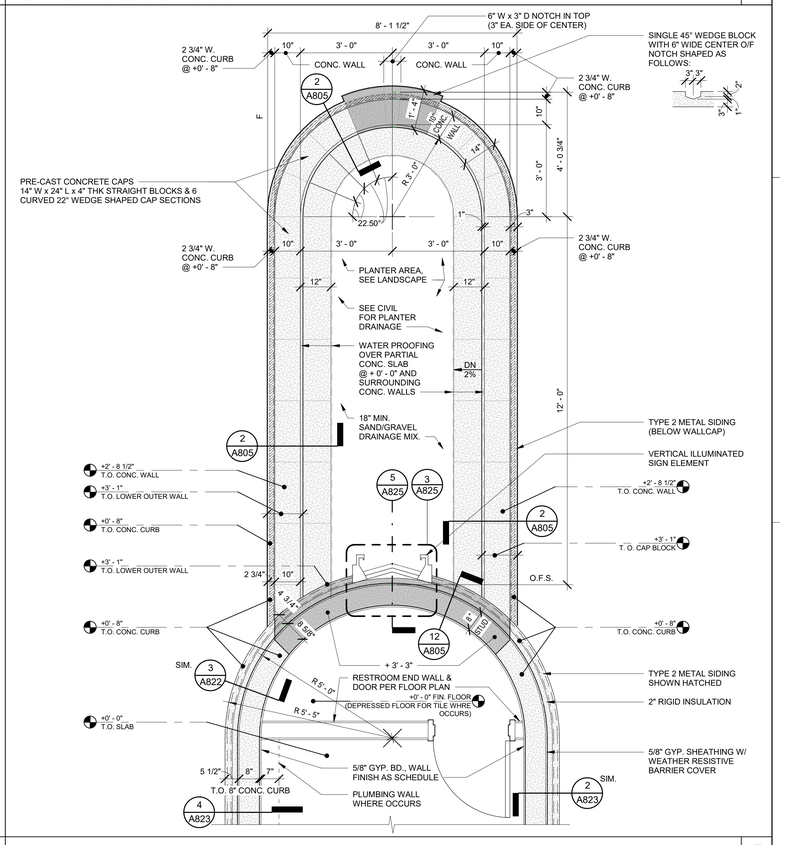

PARTIAL PLAN PLANTER @ VERTICAL ENTRY ELEMENT — 1/2" = 1'-0" — 5

PLOT DATE: 11/1/2022 10:05:45 PM

FOR BID ONLY

Teter, LLP expressly reserves its common law copyright and other property rights in these plans. This document, the ideas and designs incorporated herein, as an instrument of professional service, is not to be used in whole or part, for any other project without prior written authorization.

MARK	DATE	DESCRIPTION
	11/1/2022	DSA RESUBMITTAL

LICENSED ARCHITECT ★ VINCENT LOUIS TETER ★ No. C-23693 ★ STATE OF CALIFORNIA

TETER, LLP
ARCHITECTS ENGINEERS CONNECTED
FRESNO HEADQUARTERS
VISALIA | BAKERSFIELD | MODESTO | SAN LUIS OBISPO

TULARE CAMPUS CTE
COLLEGE OF THE SEQUOIAS
4999 E. BARDSLEY AVE.
TULARE, CA

DRAWING TITLE
DETAILS

PROJECT NO.
21-12032

DRAWING
A805

\\tet-file1\Users\ryan.odom\Documents\12032-A-COS Tulare CTE_ryan.odomNLB27.rvt

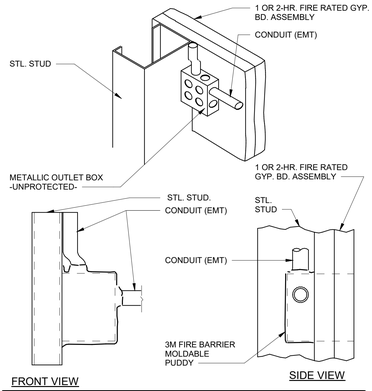

SYSTEM DETAILS

1. DRAWING NO.: 5300 ICGB5.01. UL TEST REPORT NO. R9700.89NK19575
2. SYSTEM JUSTIFICATION: UL TEST REPORT R9700, 89NK19575 (11/9/89) & R9700 9INK21798 (10/10/91). TESTS CONDUCTED IN ACCORDANCE W/ THE STANDARD FIRE TESTS OF BLDG. CONSTRUCTION & MATERIALS, ANSI/UL 263 (ASTM E 119, NFPA 251).
3. ASSEMBLY: 1 OR 2-HR. FIRE RATED GYP. BOARD/STUD WALL. WALL FRAMING MAY CONSIST OF EITHER WOOD STUDS OR STEEL CHANNEL STUDS- 1 HR. RATING OR STEEL CHANNEL STUDS- 2-HR. RATING.
4. RATINGS: 1-HR. OR 2-HR.
5. ITEM TO BE PROTECTED: METALLIC OUTLET BOX- UP TO 45. NOTE: THIS APPLICATION IS INTENDED TO PREVENT FLAME THROUGH & SMOKE PROPAGATION BY SEALING "KNOCK-OUTS" & OPENINGS IN THE BOX/ASSEMBLY. IT ALSO INHIBITS HEAT TRANSFER TO THE NON-FIRESIDE SURFACE OF THE WALL.

APPLICATION DETAILS

1. APPLY A LAYER OF 3M FIRE BARRIER MOLDABLE PUTTY PAD TO THE METALLIC OUTLET BOX, COVERING ALL EXPOSED SURFACES. NOM. PUTTY THICKNESS IS 1/8 IN. (MPPI =4"x8"x1/8", MPP - 4S = 6"x7"x1/8")
2. PRESS THE PUTTY INTO THE INTERFACE PERIMETER OF THE OUTLET BOX & THE STUD & ALSO THE INTERFACE OF THE OUTLET BOX & THE GYP. BD.
3. SEAL ANY "KNOCK-OUT" HOE CONTAINING WIRE OR CONDUIT w/A GENEROUS AMOUNT OF MOLDABLE PUTTY.

ELECTRICAL MEMBRANE SEAL FOR METALLIC J-BOXES IN 1HR RATED WALLS

N.T.S. | 17

Through-penetration Firestop Systems

System No. W-L-7059
March 02, 2001
F Ratings - 1 and 2 HR.
T Ratings - 1/2 and 3/4 HR.

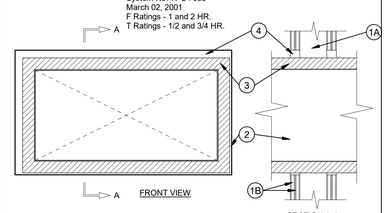

1. WALL ASSEMBLY - THE 1 OR 2 FIRE-RATED GYPSUM WALLBOARD/STUD WALL ASSEMBLY SHALL BE CONSTRUCTED OF THE MATERIALS AND IN THE MANNER DESCRIBED IN THE INDIVIDUAL U400 SERIES WALL OR PARTITION DESIGN IN THE UL FIRE RESISTANCE DIRECTORY AND SHALL INCLUDE THE FOLLOWING CONSTRUCTION FEATURES:
   A. STUDS - WALL FRAMING SHALL CONSIST OF CHANNEL STUDS. STEEL STUDS TO BE MIN. 2-1/2 IN. WIDE AND SPACED MAX. 24 IN. o.c. THE OPENING IN THE WALL TO ACCOMMODATE THE STEEL DUCT (ITEM 2) SHALL BE FRAMED ON ALL SIDES USING LENGTHS OF STUDS INSTALLED BETWEEN THE VERTICAL STUDS AND ATTACHED TO THE STUDS AT EACH END. THE FRAMED OPENING IN THE WALL SHALL BE A NOM 6 IN. WIDE AND 12 IN. OR HIGHER THAN THE WIDTH AND HEIGHT OF THE STEEL DUCT.
   B. WALLBOARD, GYPSUM* - 5/8 IN. THICK, 4 FT WIDE WITH SQUARE OR TAPERED EDGES. THE GYPSUM WALLBOARD TYPE, THICKNESS, NUMBER OF LAYERS, FASTENER TYPE AND SHEET ORIENTATION SHALL BE AS SPECIFIED IN THE INDIVIDUAL U300 OR U400 SERIES DESIGN IN THE UL FIRE RESISTANCE DIRECTORY. MAX. AREA OF OPENING IS 395 SQ. IN. WITH MAX DIMENSIONS OF 26-3/4 IN. FOR STEEL STUDS.
2. STEEL DUCT - NOM 24 IN. BY 12 IN. (OR SMALLER) 24 GAUGE (OR HEAVIER) STEEL DUCT TO BE INSTALLED ECCENTRICALLY WITHIN THE FRAMED OPENING. THE ANNULAR SPACE SHALL BE MIN. 1 IN. TO MAX. 1-3/4 IN. STEEL DUCT TO BE RIGIDLY SUPPORTED ON BOTH SIDES OF THE WALL ASSEMBLY.
3. BATT AND BLANKET* - MAX. 1-1/2 THICK GLASS FIBER BATT OR BLANKET (MIN. 3.4 pcf) JACKETED ON THE OUTSIDE WITH A FOIL-SCRIM-KRAFT FACING. LONGITUDINAL AND TRANSVERSE JOINTS SEALED WITH ALUMINUM FOIL TAPE. DURING THE INSTALLATION OF THE FILL MATERIAL, THE BATT OR BLANKET SHALL BE COMPRESSED 50% SUCH THAT THE ANNULAR SPACE WITHIN THE FIRESTOP SYSTEM SHALL BE MIN. 1/4 IN. TO MAX. 1 IN. SEE BATTS AND BLANKETS - (BKNV) CATEGORY IN THE BUILDING MATERIALS DIRECTORY FOR NAMES MANUFACTURERS. ANY BATT OR BLANKET MEETING THE ABOVE SPECIFICATIONS AND BEARING THE UL CLASSIFICATION MARKING WITH A FLAME SPREAD INDEX OF 25 OR LESS AND A SMOKE DEVELOPED INDEX 50 OR LESS MAY BE USED.
4. FILL, VOID OR CAVITY MATERIAL* - SEALANT MIN. 5/8 IN. OR 1-1/4 IN. THICKNESS OR FILL MATERIAL APPLIED WITHIN THE ANNULUS, FLUSH WITH BOTH SURFACES OF WALL FOR 1 OR 2 HR. WALLS, RESPECTIVELY. IF VOIDS DEVELOPS AFTER THE FILL MATERIAL CURES, THE VOIDS SHALL BE SEALED WITH ADDITIONAL FILL MATERIAL.

HILTI CONSTRUCTION CHEMICALS, DIV OF HILTI INC - FS-ONE SEALANT

*Bearing the UL Classification Mark

DUCT RATED HVAC (INSULATED)

N.T.S. | 12

Through-penetration Firestop Systems

System No. W-L-5096
March 30, 2015

ANSI/UL 1479 (ASTM E814)	CAN/ULC S115
F Ratings - 1 and 2 Hr. (See Item 1)	F Ratings - 1 and 2 Hr. (See Item 1)
T Ratings - 0, 1/2 and 1 Hr. (See Items 3 and 4)	FT Ratings - 0, 1/2 and 1 Hr. (See Items 3 and 4)
	FH Ratings - 1 and 2 Hr. (See Item 1)
	FTH Ratings - 0, 1/2 and 1 hr. (See Items 3 and 4)

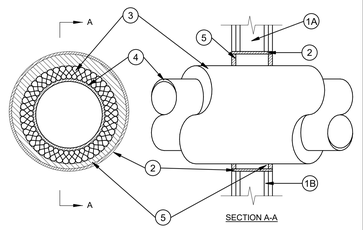

1. WALL ASSEMBLY THE 1 OR 2 HR FIRE RATED WALLBOARD/STUD WALL ASSEMBLY SHALL BE CONSTRUCTED OF THE MATERIALS AND IN THE MANNER SPECIFIED IN THE INDIVIDUAL U300, U400, V400 OR W400 SERIES WALL AND PARTITION DESIGNS IN THE UL FIRE RESISTANCE DIRECTORY AND SHALL INCLUDE THE FOLLOWING CONSTRUCTION FEATURES:
   A. STUDS - WALL FRAMING SHALL CONSIST OF EITHER WOOD STUDS OR STEEL CHANNEL STUDS. WOOD STUDS TO CONSIST OF NOM 2 BY 4 IN. (51 BY 102 mm) LUMBER SPACED 16 IN. (406 mm) o.c. STEEL STUDS TO BE MIN 2-1/2 IN. (64 mm) WIDE AND SPACED MAX. 24 IN. (610 mm) o.c.
   B. GYPSUM BOARD* - NOM 5/8 IN. (16 mm) THICK, 4 FT (1.2 m) WIDE WITH SQUARE OR TAPERED EDGES. THE GYPSUM BOARD TYPE, THICKNESS, NUMBER OF LAYERS, FASTENER TYPE AND SHEET ORIENTATION SHALL BE AS SPECIFIED IN THE INDIVIDUAL U300, U400, V400 OR W400 SERIES DESIGN IN THE FIRE RESISTANCE DIRECTORY. MAX. DIA. OF OPENINGS IS 14-1/2 IN. (368 mm) FOR WOOD STUD WALLS. MAX. DIA. OF OPENING IS 8-5/8 IN. (473 mm) FOR STEEL STUDS WALLS OR SIZED TO THE OUTSIDE DIA. OF STEEL SLEEVE (ITEM 2) WHEN OPTIONAL STEEL SLEEVE IS USED.
   THE HOURLY F AND FH RATINGS OF THE FIRESTOP SYSTEM ARE EQUAL TO THE HOURLY FIRE RATING OF THE WALL ASSEMBLY IN WHICH IT IS INSTALLED.
2. STEEL SLEEVE - (OPTIONAL) MAX. 18 IN. (457 mm) DIA. SCHEDULE 40 (OR HEAVIER) STEEL PIPE SLEEVE INSERTED IN OPENING CORE DRILLED THROUGH WALL. LENGTH OF STEEL SLEEVE TO BE EQUAL TO THICKNESS OF WALL.
3. THROUGH PENETRANT - ONE METALLIC PIPE OR TUBING INSTALLED CONCENTRICALLY OR ECCENTRICALLY WITHIN THE FIRESTOP SYSTEM. PIPE OR TUBE RIGIDLY SUPPORTED ON BOTH SIDES OF WALL ASSEMBLY. THE FOLLOWING TYPES AND SIZES OF METALLIC PIPES OR TUBE MAY BE USED:
   A. STEEL PIPE - NOM 12 IN. (305 mm) DIA. (OR SMALLER) SCHEDULE 40 (OR HEAVIER) STEEL PIPE. WHEN STEEL PIPE IS USED, T, FT AND FTH RATING ARE 1/2 HR AND 1 HR WHEN INSTALLED IN 1 AND 2 HR RATED WALLS, RESPECTIVELY.
   B. COPPER TUBE - NOM 6 IN. (152 mm) DIA. (OR SMALLER) TYPE L (OR HEAVIER) COPPER TUBE. WHEN COPPER TUBE IS USED, T, FT AND FTH RATING ARE 1/2 HR AND 1 HR WHEN INSTALLED IN 1 AND 2 HOUR RATED WALLS, RESPECTIVELY.
   C. COPPER PIPE - NOM 6 IN. (152 mm) DIA. (OR SMALLER) REGULAR (OR HEAVIER) COPPER PIPE. WHEN COPPER PIPE IS USED, T, FT, FTH RATINGS ARE 1/2 AND 1 HR WHEN INSTALLED IN 1 AND 2 HR RATED WALLS RESPECTIVELY.
4. PIPE COVERING* - MAX 2 IN. (51 mm) THICK HOLLOW CYLINDRICAL HEAVY DENSITY (NOM. 3.5 pcf OR 56 kg/m³) GLASS FIBER UNITS, JACKETED ON THE OUTSIDE WITH AN ALL SERVICE JACKET. LONGITUDINAL JOINTS SEALED WITH METAL FASTENERS OR FACTORY-APPLIED SSL TAPE. TRANSVERSE JOINTS SECURED WITH METAL FASTENERS OR WITH BUTT TAPE SUPPLIED WITH THE PRODUCT. THE ANNULAR SPACE BETWEEN INSULATED PENETRANT AND PERIPHERY OF OPENING SHALL BE MIN. 0 IN. (POINT CONTACT) TO MAX 1-7/8 IN. (48 mm). WHEN PIPE COVERING THICKNESS IS LESS THAN 2 IN. (51 mm), T, FT AND FTH RATINGS ARE 0 HR. SEE PIPE AND EQUIPMENT COVERING-MATERIALS (BRGU) CATEGORY IN THE BUILDING MATERIALS DIRECTORY FOR NAMES OF MANUFACTURERS. ANY PIPE COVERING MATERIAL MEETING THE ABOVE SPECIFICATIONS AND BEARING THE UL CLASSIFICATION MARKING WITH A FLAME SPREAD INDEX OF 25 OR LESS AND A SMOKE DEVELOPED INDEX OF 50 OR LESS MAY BE USED.
5. FILL, VOID OR CAVITY MATERIAL *-SEALANT - MIN 5/8 IN. (16 mm) OR THICKNESS OR FILL MATERIAL APPLIED WITHIN ANNULUS, FLUSH WITH BOTH SURFACES OF WALL ASSEMBLY FOR AT POINT CONTACT AN ADDITIONAL 1/2 IN. (13 mm) BEAD OF SEALANT SHALL BE APPLIED TO THE INSULATED PIPE/ WALL INTERFACE.

HILTI CONSTRUCTION CHEMICALS, DIV OF HILTI INC - FS-ONE SEALANT OR FS-ONE MAX. INTUMESCENT SEALANT

*Indicates such products shall bear the UL or cUL Certification Mark for jurisdictions employing the UL or cUL Certification (such as Canada), respectively.

UL PENETRATION RATED METALLIC PIPE/TUBING (INSULATED)

N.T.S. | 15

Through-penetration Firestop Systems

System No. W-L-7040
August 27, 2010
F Ratings - 1 and 2 HRS. (See Items 1 and 3)
T Ratings - 0 HR.
L Rating at Ambient - Less Than 1 CFM/ sq. ft.
L Rating at 400 F - Less Than 1 CFM/ sq. ft.

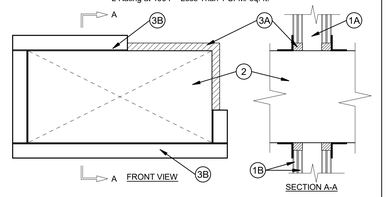

1. WALL ASSEMBLY - THE FIRE-RATED GYPSUM WALLBOARD/STUD WALL ASSEMBLY SHALL BE CONSTRUCTED OF THE MATERIALS AND IN THE MANNER SPECIFIED IN THE INDIVIDUAL U300 OR U400 SERIES WALL AND PARTITION DESIGNS IN THE FIRE RESISTANCE DIRECTORY AND SHALL INCLUDE THE FOLLOWING CONSTRUCTION FEATURES:
   A. STUDS - WALL FRAMING MAY CONSIST OF EITHER WOOD STUDS OR STEEL CHANNEL STUDS. WOOD STUDS TO CONSIST OF NOM. 2 BY 4 IN. LUMBER SPACED 16 IN. o.c. STEEL STUDS TO BE MIN. 2-1/2 IN. WIDE AND SPACED MAX. 24 IN. ADDITIONAL FRAMING MEMBERS SHALL BE USED TO COMPLETELY FRAME AROUND OPENING.
   B. GYPSUM BOARD* - NOM. 5/8 IN. THICK WITH SQUARE OR TAPERED EDGES. THE GYPSUM WALLBOARD TYPE, NUMBER OF LAYERS AND SHEET ORIENTATION SHALL BE AS SPECIFIED IN THE INDIVIDUAL WALL AND PARTITION DESIGN NUMBER. MAX. AREA OF OPENING IS 1300 IN. WITH THE DIMENSION OF 50 IN. THE HOURLY F RATING OF THE FIRESTOP SYSTEM IS EQUAL TO THE HOURLY FIRE RATING OF THE WALL ASSEMBLY IN WHICH IT IS INSTALLED.
2. STEEL DUCT - NOM. 24 IN. BY 48 IN. (OR SMALLER) NO. 24 GAUGE (OR HEAVIER) GALV. STEEL DUCT TO BE INSTALLED WITHIN THE FIRESTOP SYSTEM. THE ANNULAR SPACE SHALL BE MIN. 0 IN. (POINT CONTACT) TO A MAX. 2 IN. DUCT TO BE RIGIDLY SUPPORTED ON BOTH SIDES OF THE WALL ASSEMBLY.
3. FIRESTOP SYSTEM - THE FIRESTOP SYSTEM SHALL CONSIST OF THE FOLLOWING:
   A. FILL, VOID OR CAVITY MATERIAL* - SEALANT - MIN. 5/8 IN. THICKNESS OF FILL MATERIAL APPLIED WITHIN ANNULUS FLUSH WITH BOTH SURFACES OF WALL. AT POINT CONTACT LOCATION, A MIN. 1/2 IN. DIA. BEAD OF FILL MATERIAL SHALL BE APPLIED TO THE WALL/DUCT INTERFACE ON BOTH SURFACES OF WALL. HILTI CONSTRUCTION CHEMICALS, DIV OF HILTI, INC. - FS-ONE SEALANT, CP601S ELASTOMERIC FIRESTOP SEALANT OR CP606 FLEXIBLE SEALANT.
   B. STEEL RETAINING ANGLE - NO. 18 MSG (0.048 IN.) GALV. STEEL ANGLES CUT TO FIT CONTOUR OF DUCT WITH A 2 IN. OVERLAP ON THE DUCT AND A MIN. 1 IN. OVERLAP ON THE GYPSUM BOARD ASSEMBLY ON BOTH SURFACES OF WALL. 2 IN. LEG OF ANGLE SECURED TO DUCT WITH MIN. NO. 8 BY 3/4 IN. LONG SHEET METAL SCREWS, SPACED A MAX. OF 6 IN. o.c. WHEN BEAD OF FILL MATERIAL IS USED AT JOINT CONTACT LOCATIONS, ANGLES SHALL BE INTALLED PRIOR TO FULL MATERIAL CURING.

*Bearing the UL Classification Mark

DUCT RATED HVAC (UNISULATED)

N.T.S. | 7

Through-penetration Firestop Systems

System No. W-L-1054
October 14, 2015

ANSI/UL 1479 (ASTM E814)	CAN/ULC S115
F Ratings - 1 and 2 Hr. (See Items 1 and 3)	F Ratings - 1 and 2 Hr. (See Items 1 and 3)
T Rating - 0 Hr.	FT Rating - 0 Hr.
L Rating at Ambient - Less Than 1 CFM/ sq. ft.	FH Ratings - 1 and 2 Hr. (See Items 1 and 3)
L Rating at 400 F - Less Than 1 CFM/ sq. ft.	FTH Rating - 0 hr.
	L Rating at Ambient - Less Than 1 CFM/ sq. ft.
	L Rating at 400 F - Less Than 1 CFM/ sq. ft.

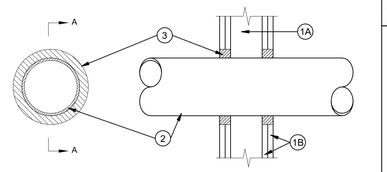

1. WALL ASSEMBLY - THE 1 OR 2 HR FIRE-RATED GYPSUM WALLBOARD/STUD WALL ASSEMBLY SHALL BE CONSTRUCTED OF THE MATERIALS AND IN THE MANNER SPECIFIED IN THE INDIVIDUAL U300 OR U400 SERIES WALL AND PARTITION DESIGNS IN THE UL FIRE RESISTANCE DIRECTORY AND SHALL INCLUDE THE FOLLOWING CONSTRUCTION FEATURES:
   A. STUDS -- WALL FRAMING MAY CONSIST OF EITHER WOOD STUDS OR STEEL CHANNEL STUDS. WOOD STUDS TO CONSIST OF NOM 2 BY 4 IN. (51 BY 102 mm) LUMBER SPACED 16 IN. (406 mm) o.c. STEEL STUDS TO BE MIN 2-1/2 IN. (64 mm) WIDE AND SPACED MAX. 24 IN. (610 mm) o.c. WHEN STEEL STUDS ARE USED AND THE DIA. OF OPENING EXCEEDS THE WIDTH OF STUD CAVITY, THE OPENING SHALL BE FRAMED ON ALL SIDES USING LENGTHS OF STEEL STUD INSTALLED BETWEEN THE VERTICAL STUDS AND SCREW-ATTACHED TO THE STEEL STUDS AT EACH END. THE FRAMED OPENING IN THE WALL SHALL BE 4 TO 6 IN. (102 TO 152 mm) WIDER AND 4 TO 6 IN. (102 TO 152 mm) HIGHER THAN THE DIA. OF THE PENETRATING ITEM SUCH THAT, WHEN THE PENETRATING ITEM IS INSTALLED IN THE OPENING, A 2 TO 3 IN. (51 TO 76 mm) CLEARANCE IS PRESENT BETWEEN THE PENETRATING ITEM AND THE FRAMING ON ALL FOUR SIDES.
   B. GYPSUM BOARD* - 5/8 IN. (16 mm) THICK, 4 FT (122 cm) WIDE WITH SQUARE OR TAPERED EDGES. THE GYPSUM BOARD TYPE, THICKNESS, NUMBER OF LAYERS, FASTENER TYPE AND SHEET ORIENTATION SHALL BE AS SPECIFIED IN THE INDIVIDUAL U300 OR U400 SERIES DESIGN IN THE UL FIRE RESISTANCE DIRECTORY. MAX. DIA. OF OPENING IS 32-1/4 IN. (819 mm) FOR STEEL STUD WALLS. MAX. DIA. OF OPENING IS 14-1/2 IN. (368 mm) FOR WOOD STUD WALLS.
   THE F AND FH RATINGS OF THE FIRESTOP SYSTEM ARE EQUAL TO THE FIRE RATING OF THE WALL ASSEMBLY.
2. THROUGH-PENETRANTS - ONE METALLIC PIPE, CONDUIT OR TUBING TO BE INSTALLED EITHER CONCENTRICALLY OR ECCENTRICALLY WITHIN THE FIRESTOP SYSTEM. THE ANNULAR SPACE SHALL BE MIN 0 IN. TO MAX. 2-1/4 IN. (57 MM) PIPE MAY BE INSTALLED WITH CONTINUOUS POINT CONTACT. PIPE, CONDUIT OR TUBING MAY BE INSTALLED AT AN ANGLE NOT GREATER THAN 45 DEGREES FROM PERPENDICULAR. PIPE, CONDUIT OR TUBING TO BE RIGIDLY SUPPORTED ON BOTH SIDES OF WALL ASSEMBLY. THE FOLLOWING TYPES AND SIZES OF METALLIC PIPES, CONDUITS OR TUBING MAY BE USED:
   A. STEEL PIPE -- NOM 30 IN. (762 mm) DIA. (OR SMALLER) SCHEDULE 10 (OR HEAVIER) STEEL PIPE.
   B. IRON PIPE -- NOM 30 IN. (762 mm) DIA. (OR SMALLER) CAST OR DUCTILE IRON PIPE.
   C. CONDUIT -- NOM 4 IN. (102 mm) DIA. (OR SMALLER) STEEL ELECTRICAL METALLIC TUBING OR 6 IN. (152 mm) DIA. STEEL CONDUIT.
   D. COPPER TUBING -- NOM 6 IN. (152 mm) DIA. (OR SMALLER) TYPE L (OR HEAVIER) COPPER TUBING.
   E. COPPER PIPE -- NOM 6 IN. (152 mm) DIA. (OR SMALLER) REGULAR (OR HEAVIER)COPPER PIPE.
3. FILL, VOID OR CAVITY MATERIAL* - SEALANT - MIN 5/8 IN. (16 mm) THICKNESS OF FILL MATERIAL APPLIED WITHIN THE ANNULUS, FLUSH WITH BOTH SURFACES OF WALL. AT THE POINT OR CONTINUOUS CONTACT LOCATIONS BETWEEN PIPE AND WALL, A MIN 1/2 IN. DIA. BEAD OF FILL MATERIAL SHALL BE APPLIED AT THE PIPE WALL INTERFACE ON BOTH SURFACES OF WALL.

HILTI CONSTRUCTION CHEMICALS, DIV OF HILTI INC - FS-ONE SEALANT OR FS-ONE MAX. INTUMESCENT SEALANT

*Indicates such products shall bear the UL or cUL Certification Mark for jurisdictions employing the UL or cUL Certification (such as Canada), respectively.

UL PENETRATION RATED METALLIC PIPE /TUBING (UNINSULATED)

N.T.S. | 10

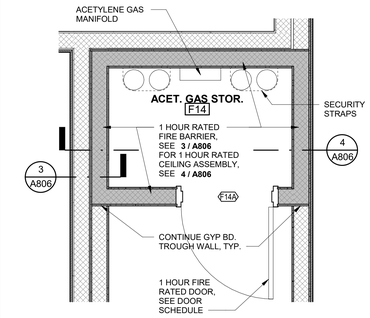

ACETYLENE STORAGE CAPACITY:
2 BOTTLES CONNECTED TO MANIFOLD
1 EMPTY BOTTLE
1 SPARE FULL BOTTLE

1 HR. FIRE RATED GAS STORAGE ROOM - F14

1/2" = 1'-0" | 2

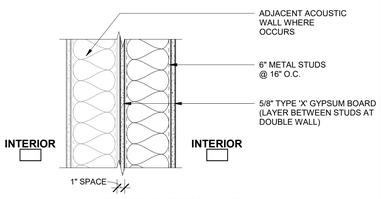

PER C.B.C 2019 TABLE 721.1(2), ITEM 13-1.1

MIN. 25 GA. STEEL STUDS @ 16" ON CENTER WITH ONE FULL-LENGTH LAYER OF 5/8" TYPE 'X' GYPSUM WALLBOARD APPLIED VERTICALLY WITH 1" #6 DRYWALL SCREWS TO EACH STUD. SCREWS ARE 8" O.C. AROUND THE PERIMETER AND 12" O.C. ON THE INTERMEDIATE STUD. WHERE APPLIED HORIZONTALLY, THE TYPE 'X' GYPSUM WALLBOARD SHALL BE ATTACHED TO STUDS AND THE HORIZONTAL JOINTS SHALL BE STAGGERED WITH THOSE ON THE OPPOSITE SIDE. SCREWS FOR THE HORIZONTAL APPLICATION SHALL BE 8" ON CENTER AT VERTICAL EDGES AND 12" ON CENTER AT INTERMEDIATE STUDS.

1 HR FIRE RATED ASSEMBLY - WALL

1 1/2" = 1'-0" | 3

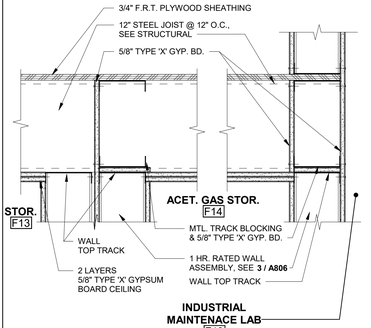

PER C.B.C 2019 TABLE 721.1(3), ITEM 22-1.1

STEEL JOISTS SPACED A MAXIMUM 24" O.C. WITH WOOD STRUCTURAL PANELS WITH EXTERIOR GLUE APPLIED AT RIGHT ANGLES TO TOP OF JOIST WITH #8 SCREWS. THE WOOD STRUCTURAL PANEL THICKNESS SHALL BE NOT LESS THAN NOMINAL 1/2" NOR LESS THAN REQUIRED BY CHAPTER 23. BASE LAYER 5/8" TYPE 'X' GYPSUM BOARD APPLIED AT RIGHT ANGLES TO STEEL FRAMING 24" O.C. WITH 1" TYPE S DRYWALL SCREWS SPACED 24" O.C.. FACE LAYER 5/8" TYPE 'X' GYPSUM BOARD APPLIED AT RIGHT ANGLES TO STEEL FRAMING ATTACHED THROUGH BASE LAYER WITH 1 5/8" TYPE S DRYWALL SCREWS 12" O.C. AT END JOINTS AND INTERMEDIATE JOINTS AND 1-1/2" TYPE G DRYWALL SCREWS 12" O.C. PLACED 2" BACK ON EITHER SIDE OF FACE LAYER END JOINTS. JOINTS OF THE FACE LAYER ARE OFFSET 24" FROM THE JOINTS OF THE BASE LAYER. GYPSUM ASSOCIATION FC 4490, CEILING PROVIDES ONE HOUR FIRE RESISTANCE PROTECTION FOR FRAMING.

1 HR FIRE RATED ASSEMBLY - CEILING

1 1/2" = 1'-0" | 4

MARK	DATE	DESCRIPTION
	11/1/2022	DSA RESUBMITTAL

FOR BID ONLY

Teter, LLP expressly reserves its common law copyright and other property rights in these plans. This document, the ideas and designs incorporated herein, as an instrument of professional service, is not to be used in whole or in part, for any other project without prior written authorization.

TETER, LLP
ARCHITECTS ENGINEERS CONSULTANTS
FRESNO HEADQUARTERS
VISALIA | BAKERSFIELD | MODESTO | SAN LUIS OBISPO

TULARE CAMPUS CTE
COLLEGE OF THE SEQUOIAS
4999 E. BARDSLEY AVE.
TULARE, CA

DRAWING TITLE
FIRE RATED DETAILS

PROJECT NO.
21-12032

DRAWING
A806

PLOT DATE: 11/1/2022 10:05:50 PM

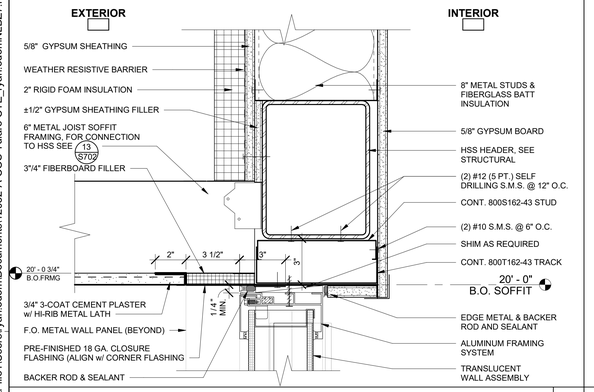

TRANSL. GL. - CURTAIN WALL HEAD AT SOFFIT 3" = 1'-0" | 21

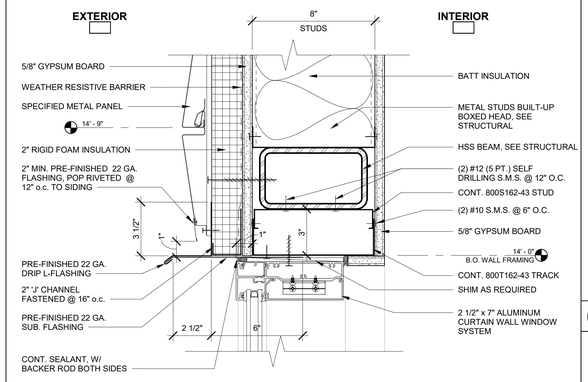

CURTAIN WALL HEAD AT METAL SIDING 3" = 1'-0" | 16

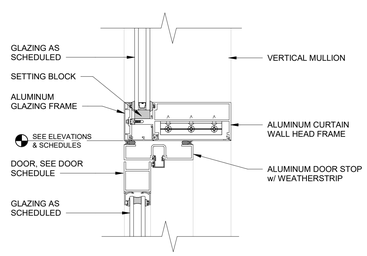

CURTAIN WALL DOOR HEAD AT TRANSOM 3" = 1'-0" | 11

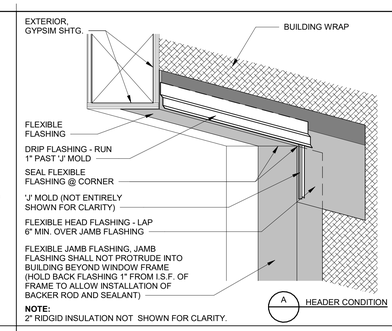

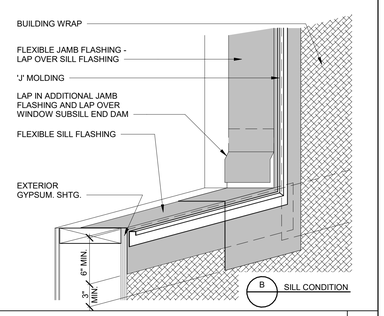

TYP. OPENING FLASHING 1 1/2" = 1'-0" | 1

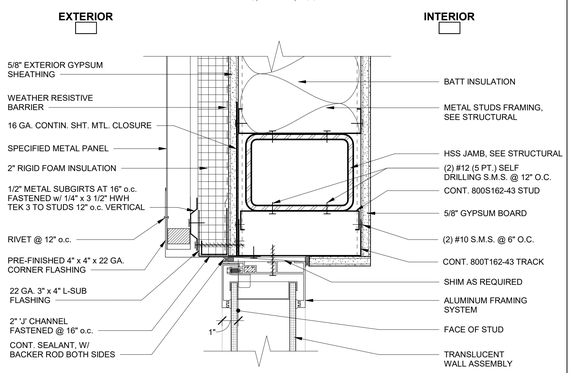

TRANSLUCENT GLAZING JAMB AT METAL SIDING 3" = 1'-0" | 23

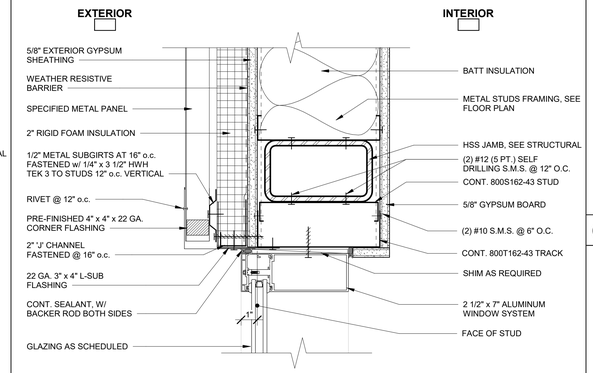

CURTAIN WALL JAMB AT METAL SIDING 3" = 1'-0" | 18

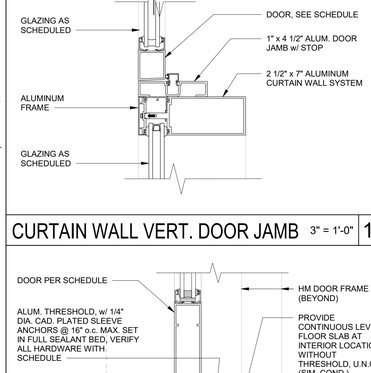

CURTAIN WALL VERT. DOOR JAMB 3" = 1'-0" | 12

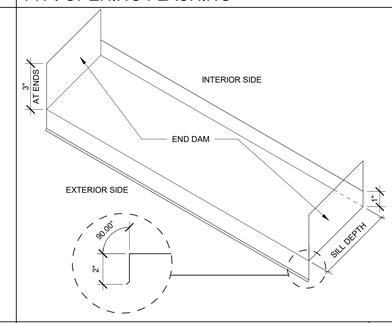

WINDOW DAM FLASHING 3" = 1'-0" | 7

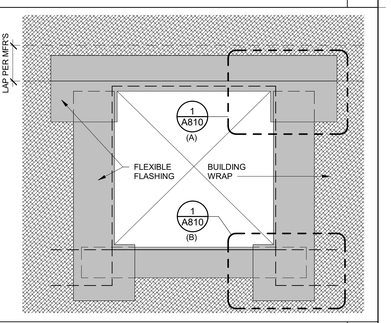

TYP. OPENING FLASHING 1" = 1'-0" | 2

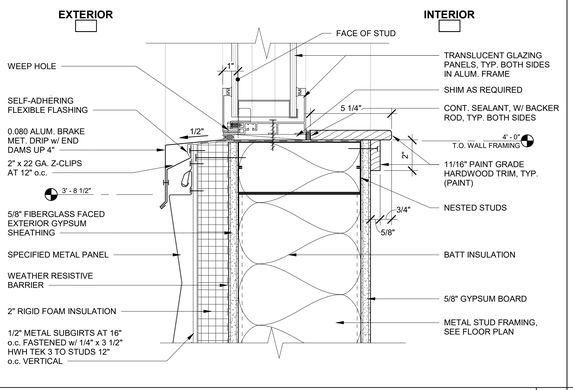

TRANSL. GLAZED SILL AT METAL WALL PANELS 3" = 1'-0" | 24

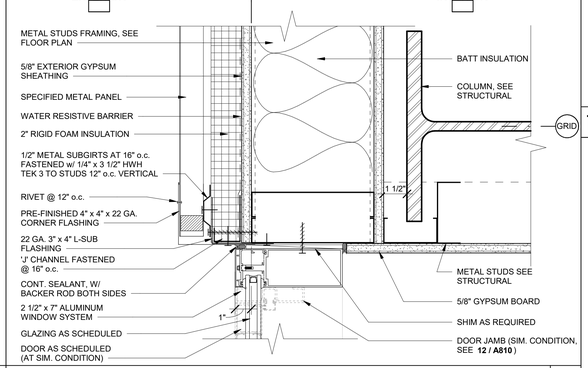

CURTAIN WALL JAMB AT COLUMN (DOOR JAMB SIM.) 3" = 1'-0" | 19

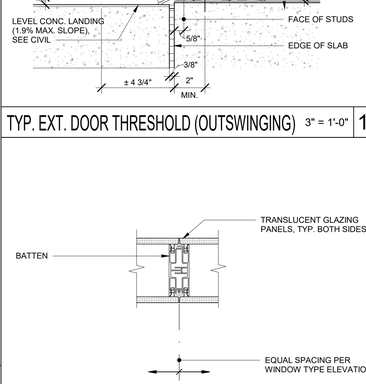

TYP. EXT. DOOR THRESHOLD (OUTSWINGING) 3" = 1'-0" | 13

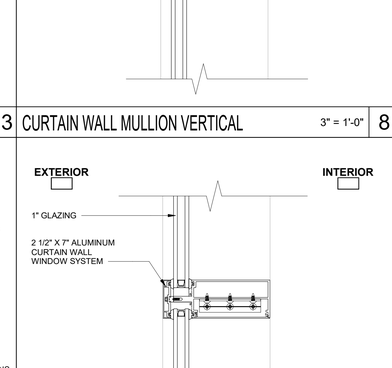

CURTAIN WALL MULLION VERTICAL 3" = 1'-0" | 8

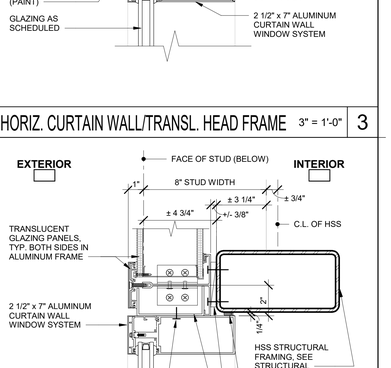

HORIZ. CURTAIN WALL/TRANSL. HEAD FRAME 3" = 1'-0" | 3

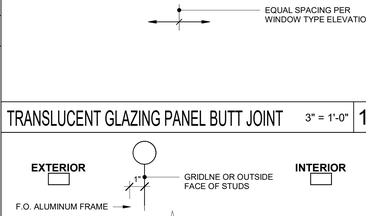

TRANSLUCENT GLAZING PANEL BUTT JOINT 3" = 1'-0" | 14

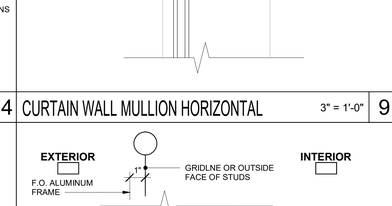

CURTAIN WALL MULLION HORIZONTAL 3" = 1'-0" | 9

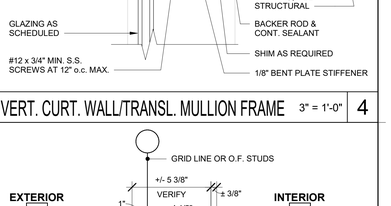

VERT. CURT. WALL/TRANSL. MULLION FRAME 3" = 1'-0" | 4

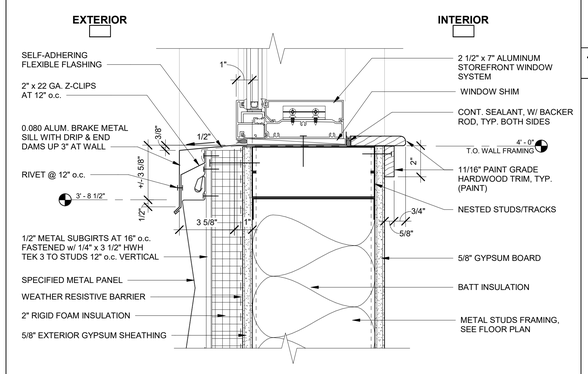

SILL AT METAL PANELS 3" = 1'-0" | 20

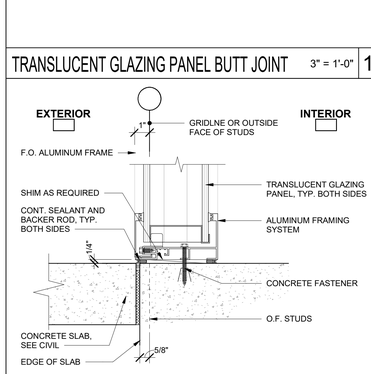

TRANSLUCENT GLAZING SILL FRAME AT SLAB 3" = 1'-0" | 15

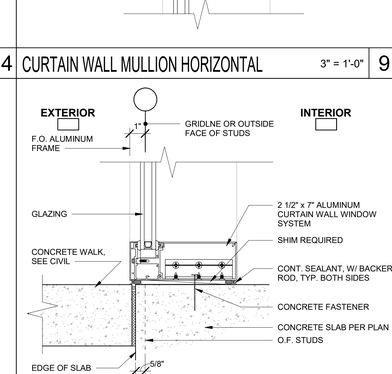

CURTAIN WALL SILL AT SLAB 3" = 1'-0" | 10

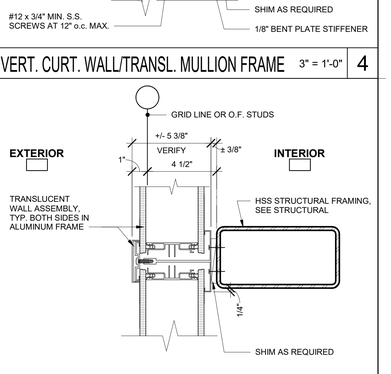

VERTICAL TRANSLUCENT PANEL MULLION 3" = 1'-0" | 5

PLOT DATE: 11/1/2022 10:05:58 PM

\\tef-file1\Users\ryan.odom\Documents\12032-A-COS Tulare CTE_ryan.odomNLB27.rvt

Teter, LLP expressly reserves its common law copyright and other property rights in these plans. This document, the ideas and designs incorporated herein, as an instrument of professional service, is not to be used in whole or in part, for any other project without prior written authorization.

FOR BID ONLY

MARK	DATE	DESCRIPTION
	11/1/2022	DSA RESUBMITTAL

TETER, LLP
FRESNO HEADQUARTERS
VISALIA | BAKERSFIELD | MODESTO | SAN LUIS OBISPO
ARCHITECTS ENGINEERS CONNECTED

TULARE CAMPUS CTE
COLLEGE OF THE SEQUOIAS
4999 E. BARDSLEY AVE.
TULARE, CA

DRAWING TITLE
EXTERIOR OPENING DETAILS

PROJECT NO.
21-12032

DRAWING
A810

\\tet-file1\Users\ryan.odom\Documents\12032-A-COS Tulare CTE_ryan.odomNLB27.rvt

NOTE:
PROVIDE 2 ANCHORS @ HEAD OF FRAMES FOR PAIRS OF DOORS, ALLOW FOR VERTICAL DEFLECTION

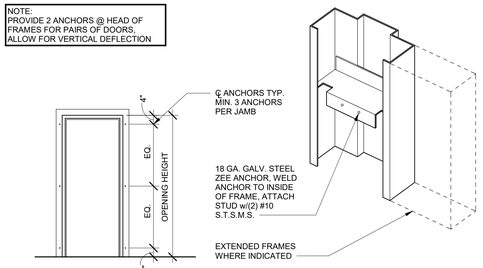

TYP. H.M. DOOR & WINDOW ANCHORS
1 1/2" = 1'-0" | 26

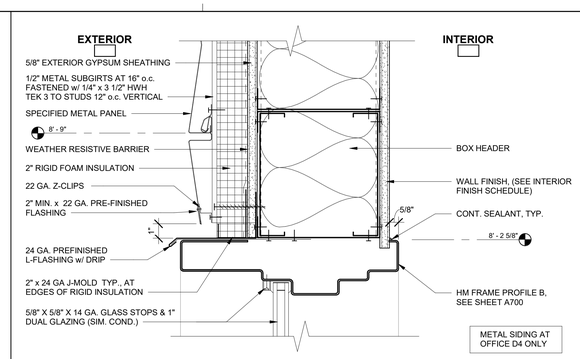

H.M. WINDOW HEAD AT METAL WALL PANELS
3" = 1'-0" | 16

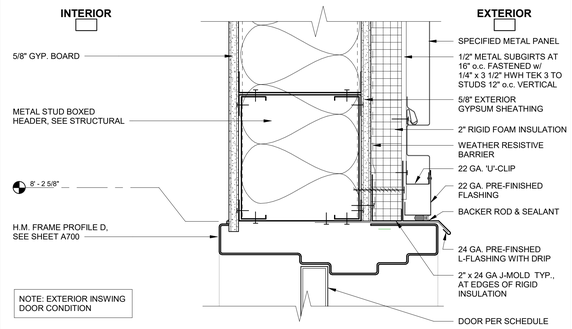

H.M.EXT.DOOR HEAD @GEND. NEUTR. RR METAL PANELS
3" = 1'-0" | 6

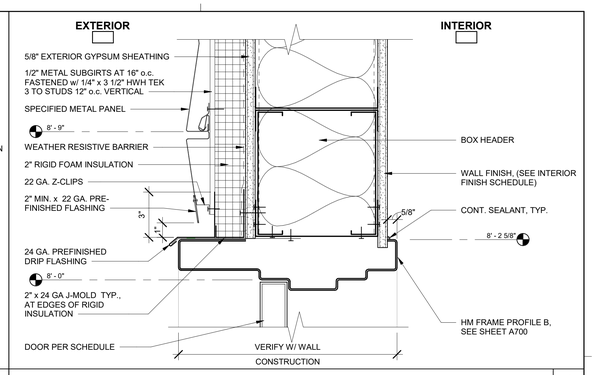

H.M. EXT. DOOR HEAD @ METAL WALL PANELS
3" = 1'-0" | 1

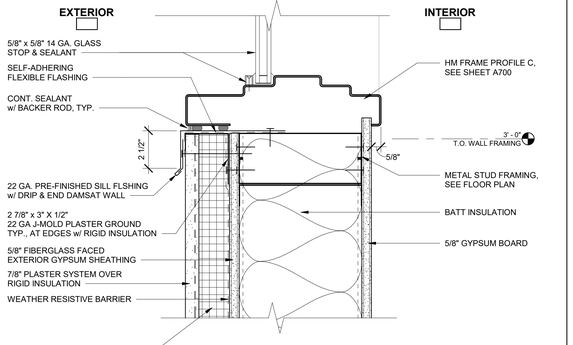

H.M. EXT. WINDOW HEAD @ PLASTER WALLS
3" = 1'-0" | 27

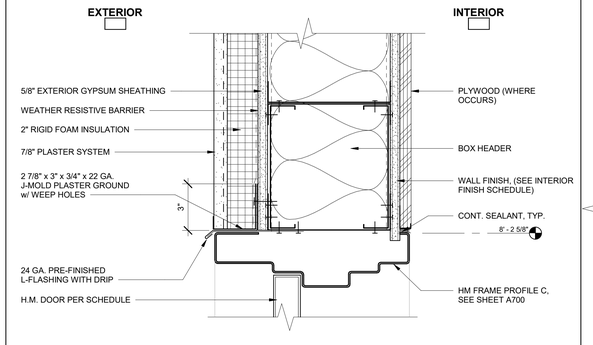

H.M. EXT. WINDOW JAMB @ METAL WALL PANELS
3" = 1'-0" | 17

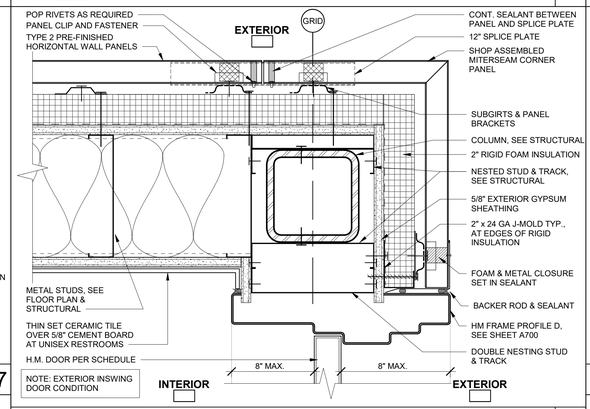

H.M EXT. DOOR JAMB AT GENDER NEUTR. RR CORNER
3" = 1'-0" | 7

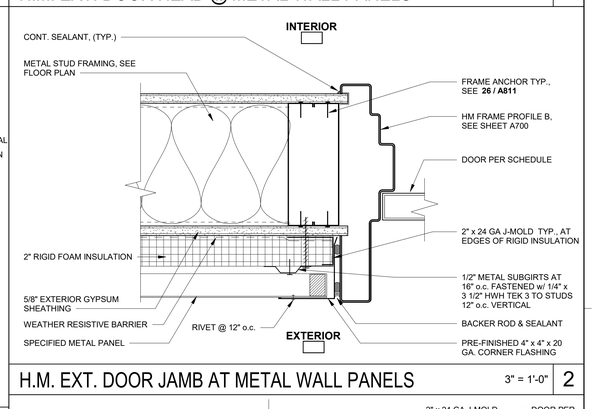

H.M. EXT. DOOR JAMB AT METAL WALL PANELS
3" = 1'-0" | 2

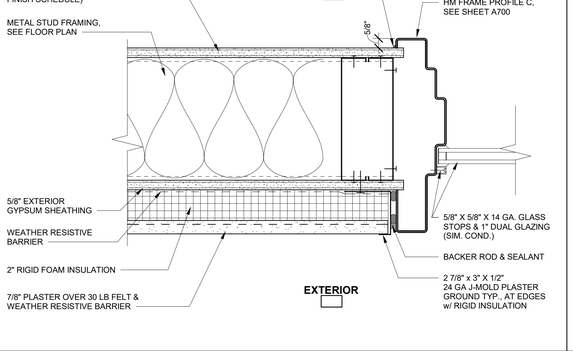

H.M. EXT. WINDOW JAMB @ PLASTER WALLS
3" = 1'-0" | 28

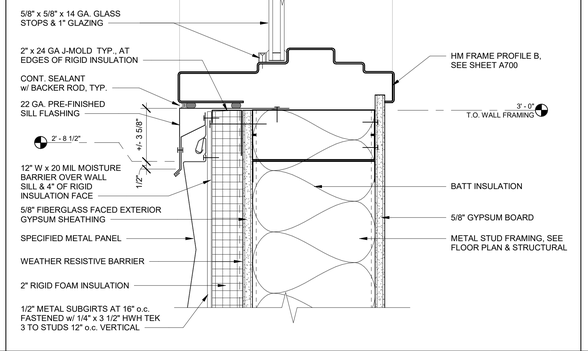

H.M. WINDOW SILL AT METAL WALL PANELS
3" = 1'-0" | 18

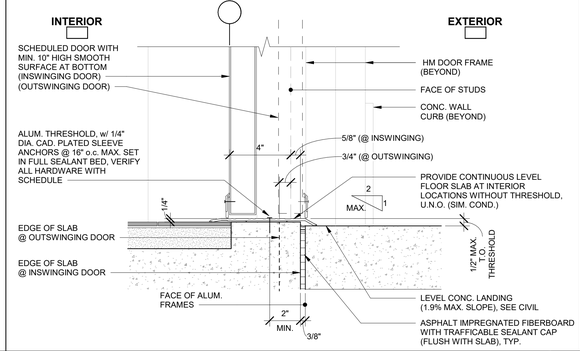

TYP. EXT. DOOR THRESHOLD (INSWINGING)
3" = 1'-0" | 8

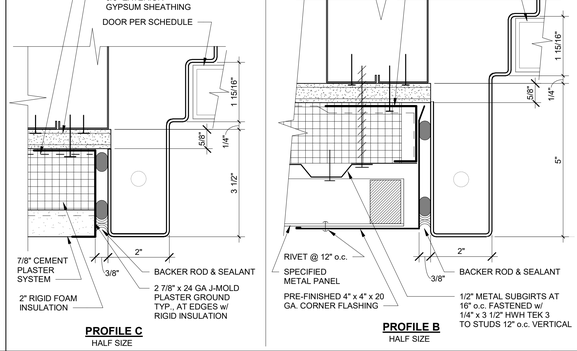

ENLARGED H.M. FRAME DETAILS
6" = 1'-0" | 3

H.M. EXT. WINDOW HEAD @ PLASTER WALLS
3" = 1'-0" | 27

H.M. EXT. WINDOW JAMB @ METAL WALL PANELS
3" = 1'-0" | 17

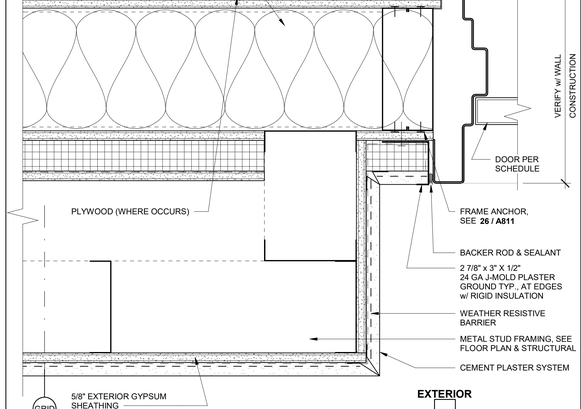

H.M EXT. DOOR JAMB AT GENDER NEUTR. RR CORNER
3" = 1'-0" | 7

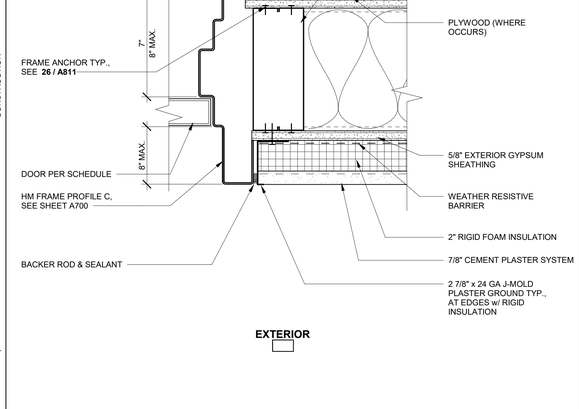

H.M. EXT. DOOR JAMB @ METAL WALL PANELS
3" = 1'-0" | 2

H.M. EXT. DOOR HEAD @ PLASTER WALLS
3" = 1'-0" | 20

H.M. EXT. WINDOW SILL AT PLASTER WALLS
3" = 1'-0" | 30

H.M. EXT. DOOR HEAD @ PLASTER WALLS
3" = 1'-0" | 20

H.M. EXT. DOOR JAMB @ PILASTER BLDG. D
3" = 1'-0" | 10

H.M. EXT. DOOR JAMB @ CEMENT PLASTER
3" = 1'-0" | 5

PLOT DATE: 11/1/2022 10:06:03 PM

FOR BID ONLY

Teter, LLP expressly reserves its common law copyright and other property rights in these plans. This document, the ideas and designs incorporated herein, as an instrument of professional service, is not to be used in whole or part, for any other project without prior written authorization.

MARK	DATE	DESCRIPTION
	11/1/2022	DSA RESUBMITTAL

TETER, LLP
ARCHITECTS ENGINEERS CONNECTED
FRESNO HEADQUARTERS
VISALIA | BAKERSFIELD | MODESTO | SAN LUIS OBISPO

TULARE CAMPUS CTE
COLLEGE OF THE SEQUOIAS
4999 E. BARDSLEY AVE.
TULARE, CA

DRAWING TITLE
EXTERIOR OPENING DETAILS

PROJECT NO.
21-12032

DRAWING
A811

\\tetr-file1\Users\ryan.odom\Documents\12032-A-COS Tulare CTE_ryan.odomNLB27.rvt
18" 14" 10" 7" 4"

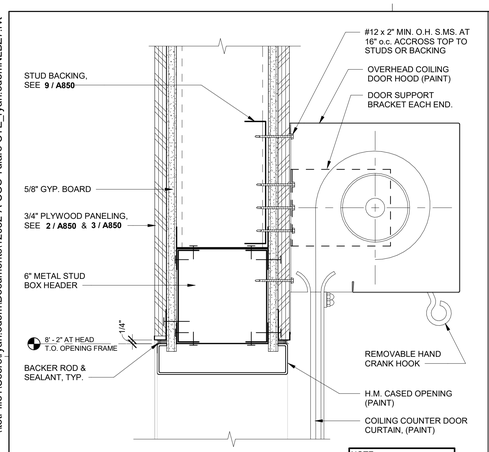

OVERHEAD COILING DOOR HEAD 3" = 1'-0" 27

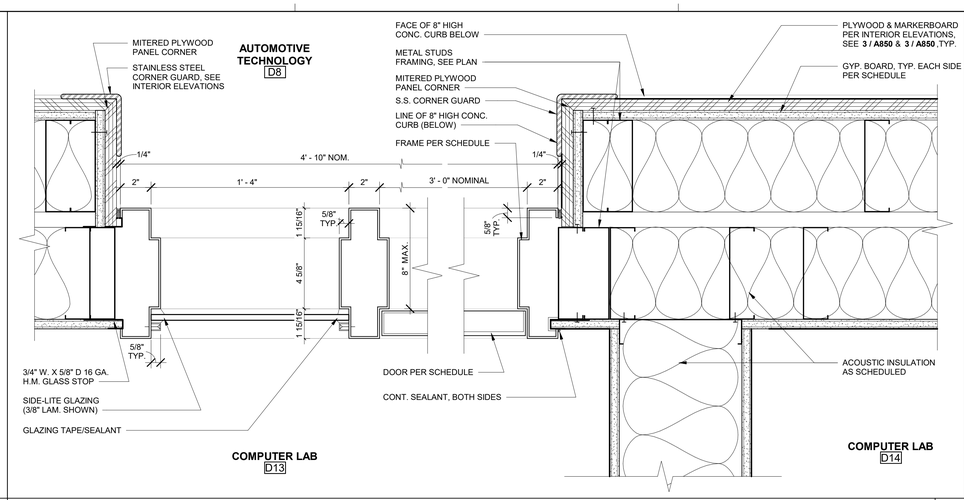

DOOR JAMB INT. BLDG D 3" = 1'-0" 7

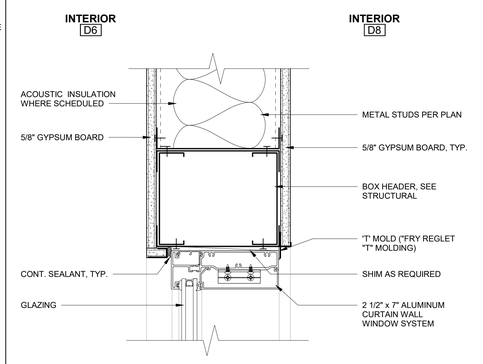

INT. CURTAIN WALL HEAD 3" = 1'-0" 2

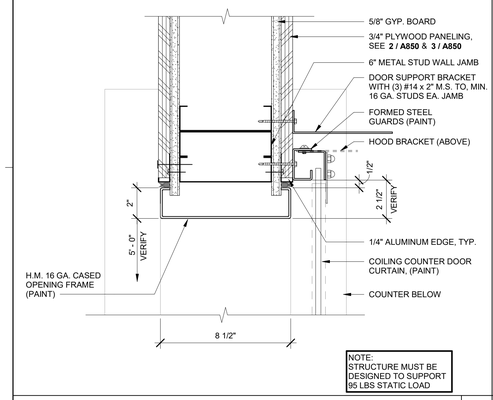

OVERHEAD COILING DOOR JAMB 3" = 1'-0" 28

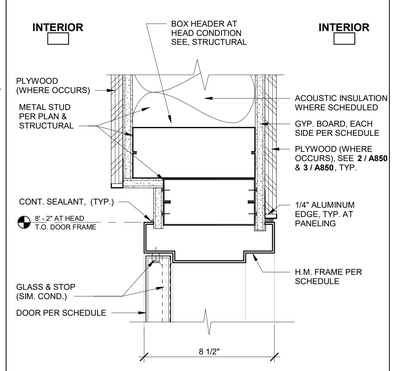

H.M. DOOR HEAD/JAMB @8" STUD WALL (WNDW SIM.) 3" = 1'-0" 17

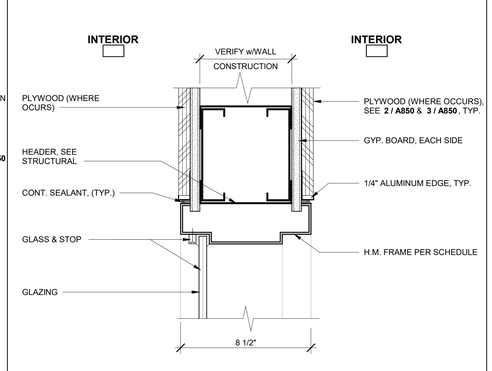

H.M. INT. WINDOW HEAD 3" = 1'-0" 13

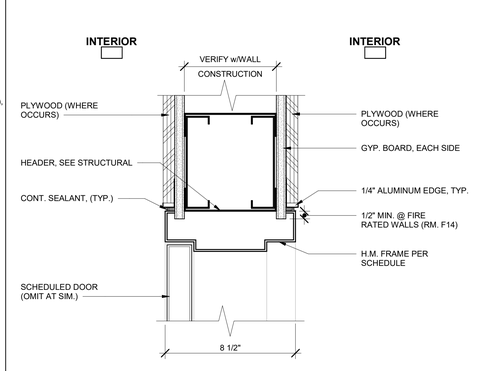

H.M. INT. DOOR HEAD 3" = 1'-0" 8

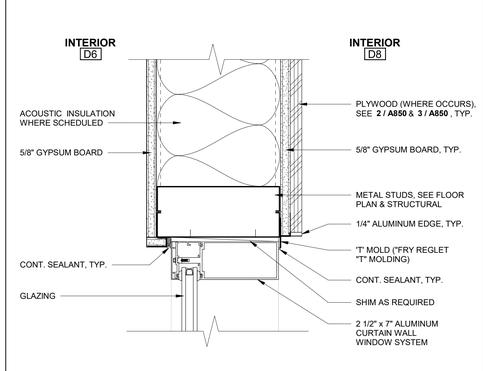

INT. CURTAIL WALL JAMB 3" = 1'-0" 3

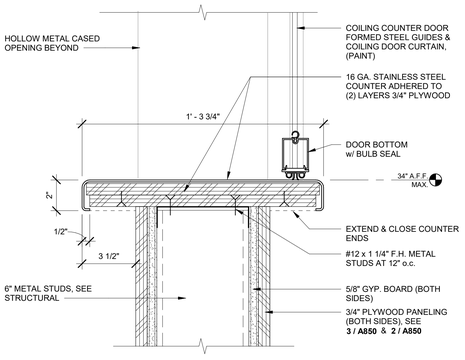

STAINLESS STEEL SERVICE COUNTER 3" = 1'-0" 29

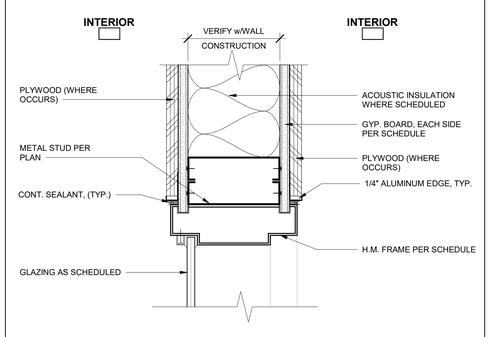

H.M. INTERIOR WINDOW JAMB 3" = 1'-0" 14

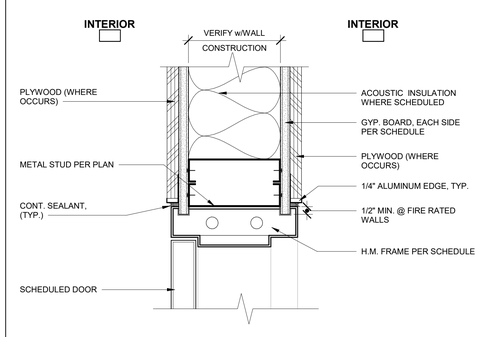

H.M. INTERIOR DOOR JAMB 3" = 1'-0" 9

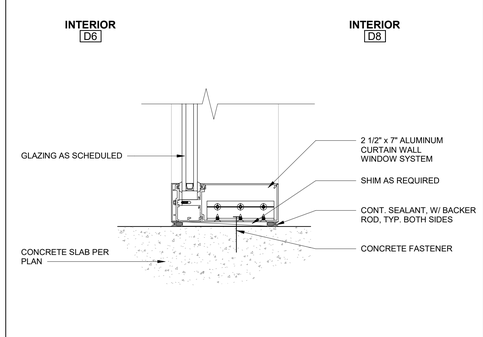

ALUM. INTERIOR SILL 3" = 1'-0" 4

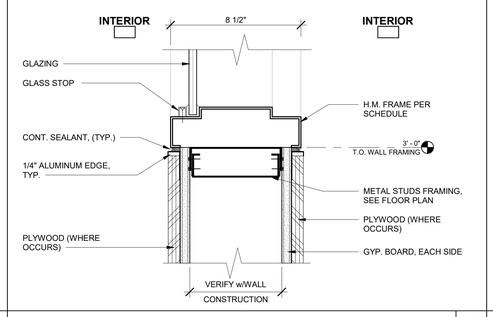

H.M. INT. WINDOW SILL 3" = 1'-0" 15

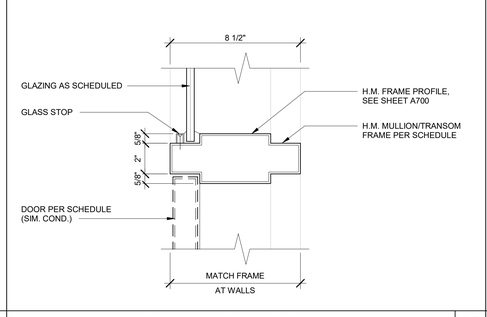

H.M. INT. WINDOW MULLION (DOOR SIM.) 3" = 1'-0" 10

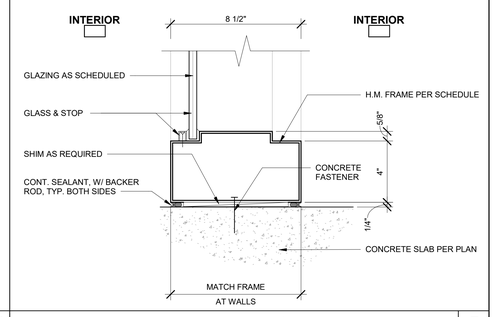

H.M. INT. WINDOW SILL AT FLOOR 3" = 1'-0" 5

PLOT DATE: 11/1/2022 10:06:10 PM

FOR BID ONLY

Teter, LLP expressly reserves its common law copyright and other property rights in these plans. This document, the ideas and designs incorporated herein, as an instrument of professional service, is not to be used in whole or part, for any other project without prior written authorization.

MARK	DATE	DESCRIPTION
	11/1/2022	DSA RESUBMITTAL

LICENSED ARCHITECT RYAN L. ODOM No. C-32683 STATE OF CALIFORNIA

TETER, LLP
FRESNO HEADQUARTERS
VISALIA | BAKERSFIELD | MODESTO | SAN LUIS OBISPO
ARCHITECTS ENGINEERS CONNECTED

TULARE CAMPUS CTE
COLLEGE OF THE SEQUOIAS
4999 E. BARDSLEY AVE.
TULARE, CA

DRAWING TITLE
INTERIOR OPENING DETAILS

PROJECT NO.
21-12032

DRAWING
A812

\\tetr-file1\Users\ryan.odom\Documents\12032-A-COS Tulare CTE_ryan.odomNLB27.rvt

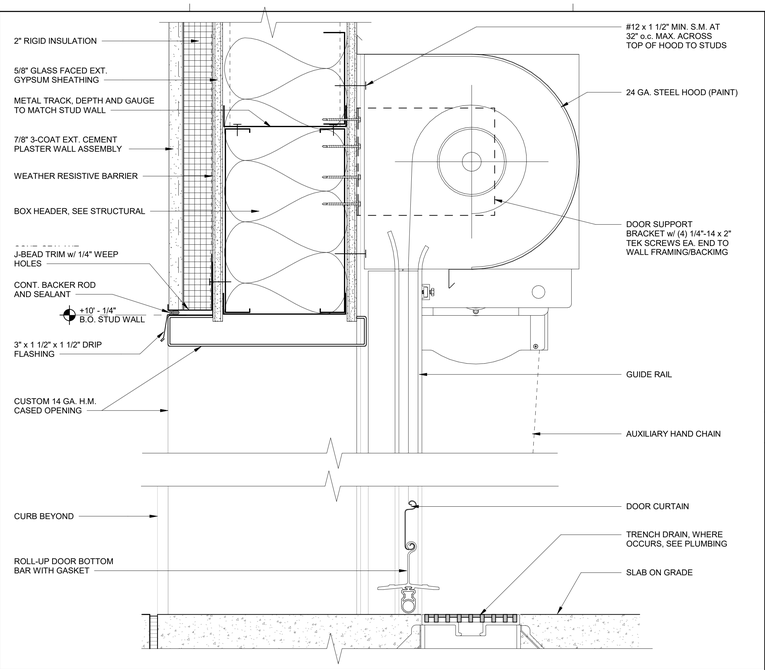

OVERHEAD COILING DOOR HEAD AND DOOR SILL — 3" = 1'-0" — 12

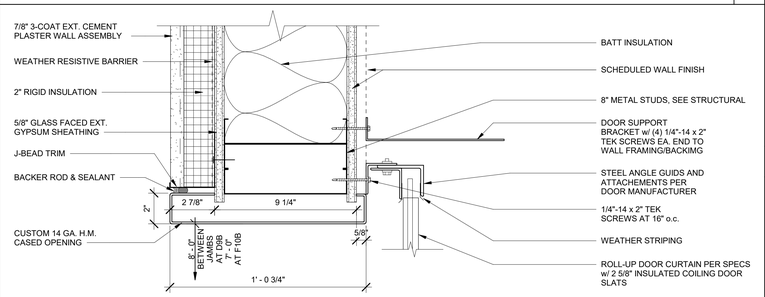

OVERHEAD COILING DOOR JAMB — 3" = 1'-0" — 13

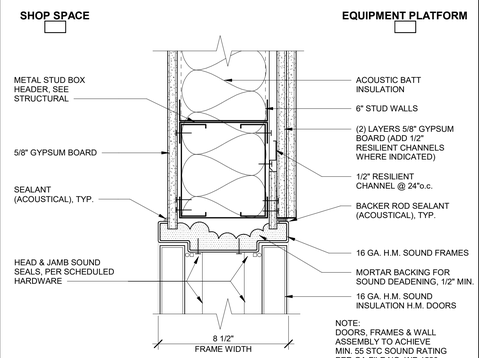

EQUIP. PLATFORM SOUND WALLS & H.M. DOOR HEAD (SINGLE WALL) — 3" = 1'-0" — 6

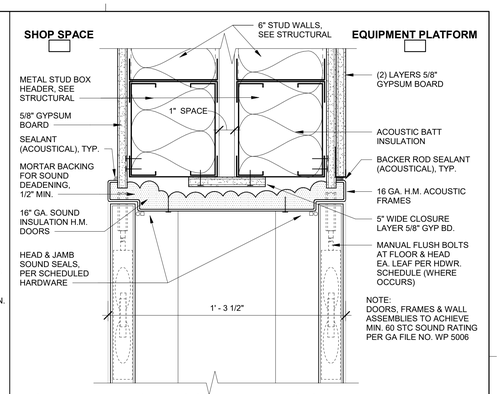

EQUIP. PLATFORM SOUND WALLS & H.M. DOOR HEAD (DBL. WALL) — 3" = 1'-0" — 1

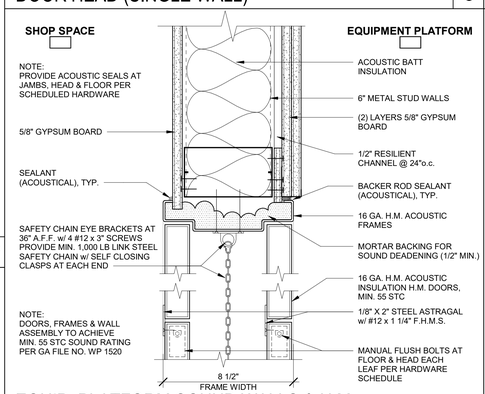

EQUIP. PLATFORM SOUND WALLS & H.M. JAMBS (SINGLE WALL) — 3" = 1'-0" — 7

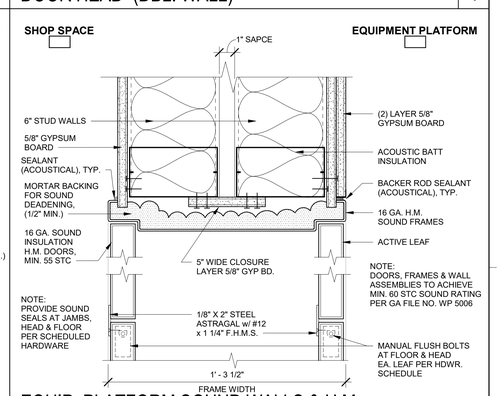

EQUIP. PLATFORM SOUND WALLS & H.M. JAMBS (DBL. WALL) — 3" = 1'-0" — 2

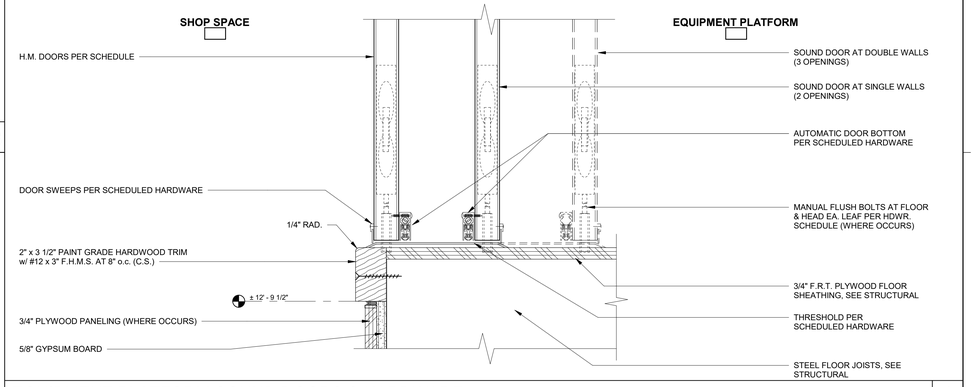

EQUIPMENT PLATFORM SOUND DOORS & HARDWARE — 3" = 1'-0" — 4

PLOT DATE: 11/1/2022 10:06:14 PM

FOR BID ONLY

Teter, LLP expressly reserves its common law copyright and other property rights in these plans. This document, the ideas and designs incorporated herein, as an instrument of professional service, is not to be used in whole or part, for any other project without prior written authorization.

MARK	DATE	DESCRIPTION
	11/1/2022	DSA RESUBMITTAL

LICENSED ARCHITECT * VINDON CHRISTOPHER COULTER * No. C-29823 * STATE OF CALIFORNIA

TETER, LLP
FRESNO HEADQUARTERS
VISALIA | BAKERSFIELD | MODESTO | SAN LUIS OBISPO
ARCHITECTS ENGINEERS CONNECTED

TETER

TULARE CAMPUS CTE
COLLEGE OF THE SEQUOIAS
4999 E. BARDSLEY AVE.
TULARE, CA

DRAWING TITLE
EQUIPMENT PLATFORM DOORS AND OVERHEAD COILING DOORS

PROJECT NO.
21-12032

DRAWING
A813

\\tetr-file1\Users\ryan.odom\Documents\12032-A-COS Tulare CTE_ryan.odomNLB27.rvt

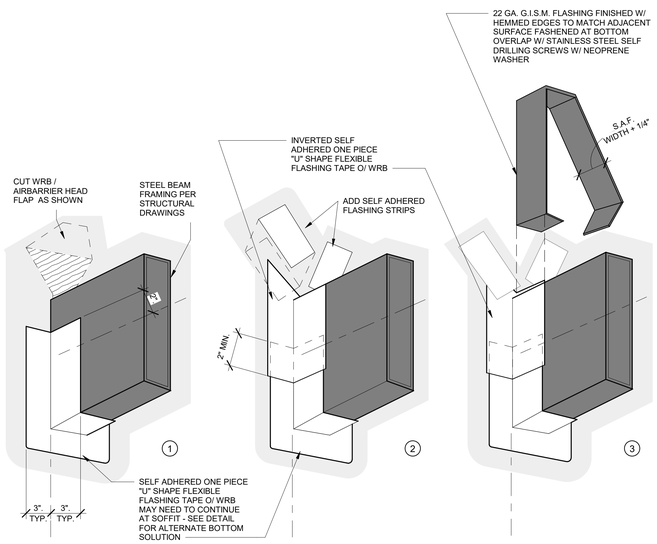

NOTE: SIDING NOT SHOWN FOR CLARITY

OUT RIGGER FLASHING - TYPICAL AT BEAMS THAT PENETRATE & EXTEND OUT FROM EXTRIOR WALLS 1" = 1'-0" | 17

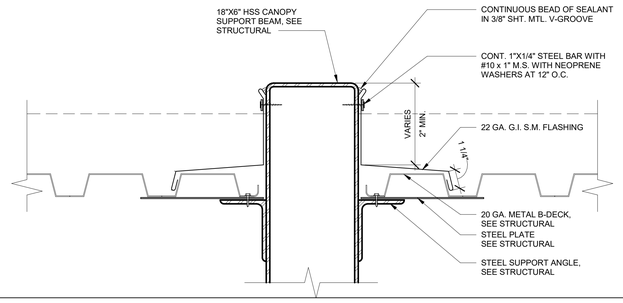

METAL DECK EDGE FLASHING 3" = 1'-0" | 18

END OF GUTTER/SUPPORT BEAM FLASHING DETAIL 3" = 1'-0" | 3A

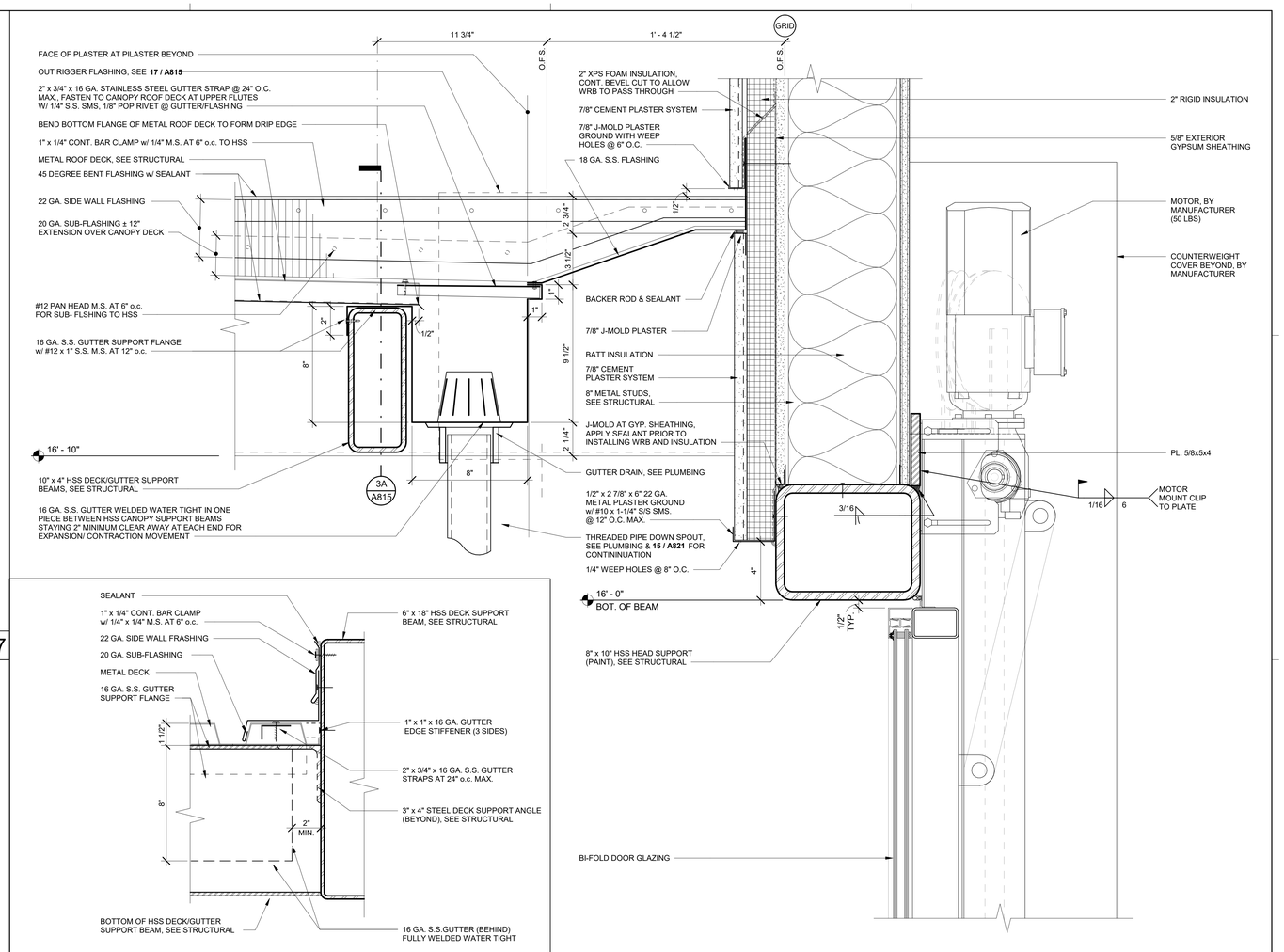

BI-FOLD DOOR HEAD/ ADJACENT GUTTER / ADJACENT FLASHING 3" = 1'-0" | 3

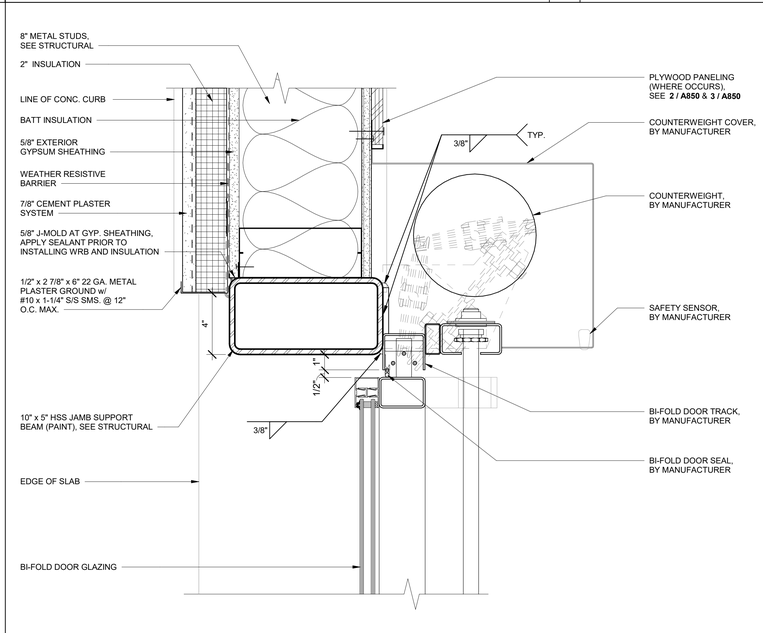

BI-FOLD DOOR JAMB 3" = 1'-0" | 15

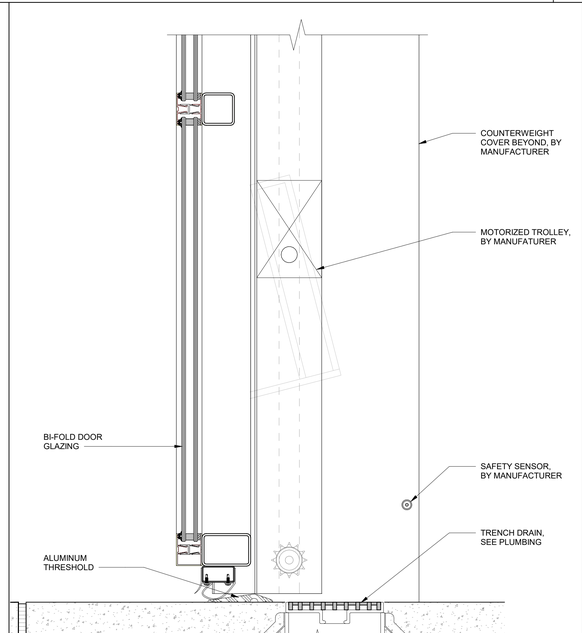

BI-FOLD DOOR SILL 3" = 1'-0" | 5

PLOT DATE: 11/1/2022 10:06:18 PM

FOR BID ONLY

Teter, LLP expressly reserves its common law copyright and other property rights in these plans. This document, the ideas and designs incorporated herein, as an instrument of professional service, is not to be used in whole or in part, for any other project without prior written authorization.

MARK	DATE	DESCRIPTION
	11/1/2022	DSA RESUBMITTAL

LICENSED ARCHITECT ★ VINOD KUMAR GUPTA ★ No. C-23423 ★ STATE OF CALIFORNIA

TETER, LLP
FRESNO HEADQUARTERS
VISALIA | BAKERSFIELD | MODESTO | SAN LUIS OBISPO
ARCHITECTS ENGINEERS CONNECTED

TULARE CAMPUS CTE
COLLEGE OF THE SEQUOIAS
4999 E. BARDSLEY AVE.
TULARE, CA

DRAWING TITLE
BI-FOLD DOOR AND CANOPY/GUTTER DETAILS

PROJECT NO.
21-12032

DRAWING
A815

\\tetr-file1\Users\ryan.odom\Documents\12032-A-COS Tulare CTE_ryan.odomNLB27.rvt

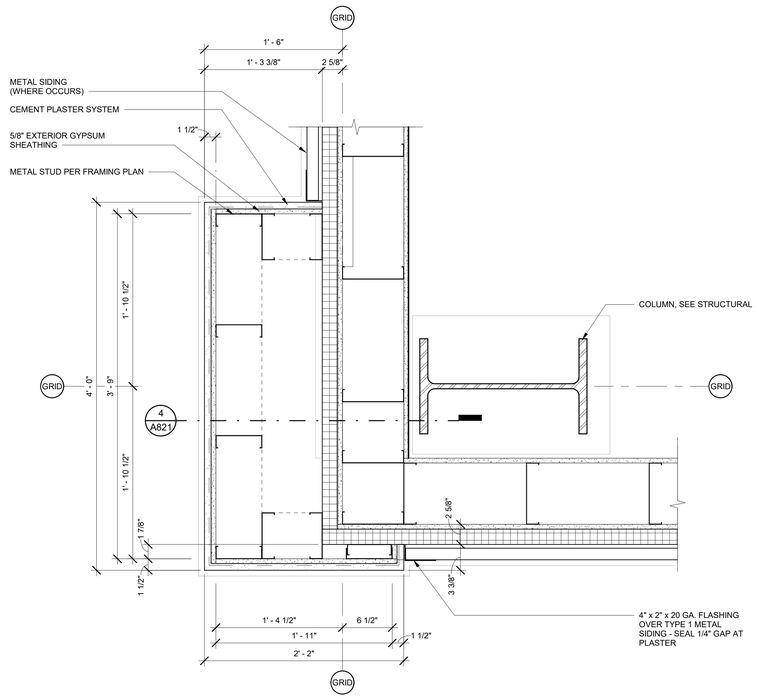

PLASTER BOXED COLUMNS ABOVE CONCRETE PIERS - CORNER WALL, TYP. 1 1/2" = 1'-0" | 22

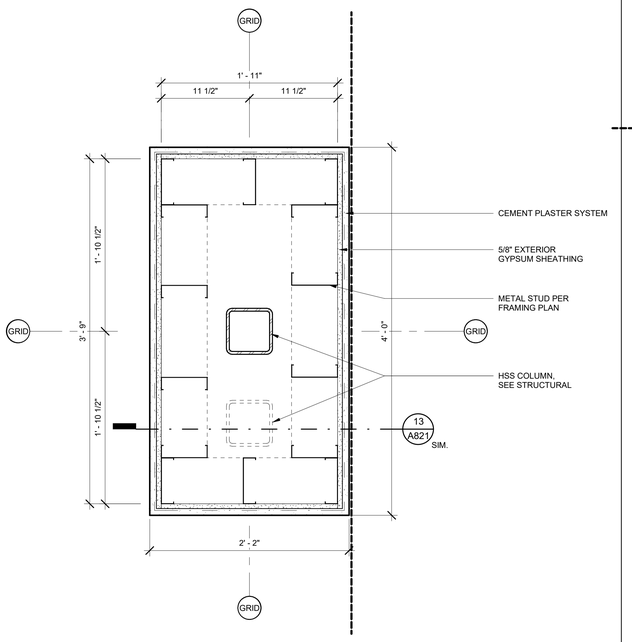

PLASTER BOXED COLUMNS ABOVE CONCRETE PIERS - RECTANGULAR, TYP. 1 1/2" = 1'-0" | 12

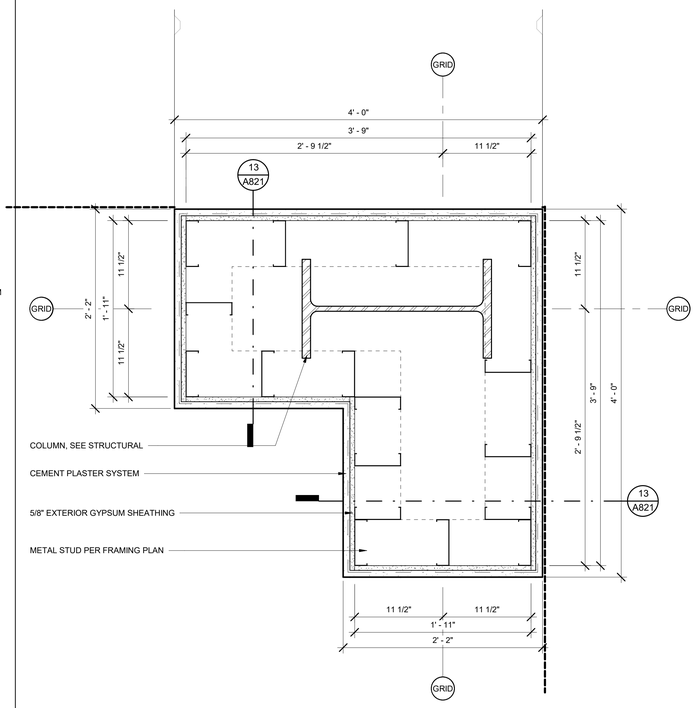

PLASTER BOXED COLUMNS ABOVE CONCERTE PIERS - CORNER, TYP. 1 1/2" = 1'-0" | 2

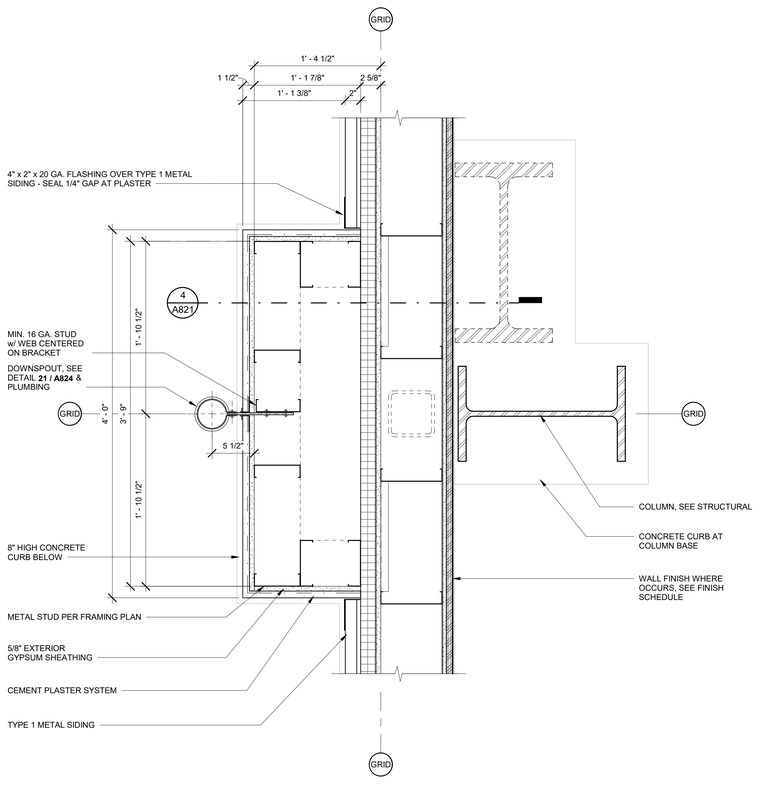

PLASTER BOXED STUDS ABOVE CONCRETE PIERS - WALL, TYP. 1 1/2" = 1'-0" | 25

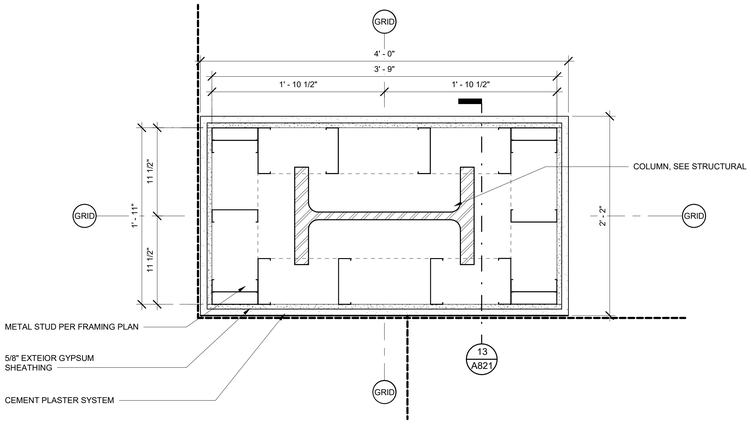

PLASTER BOXED COLUMNS ABOVE CONCRETE PIERS - RECTANGULAR, TYP. 1 1/2" = 1'-0" | 15

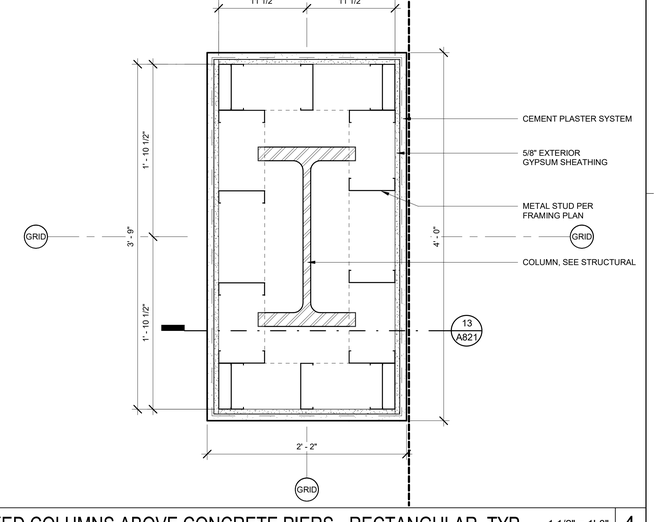

PLASTER BOXED COLUMNS ABOVE CONCRETE PIERS - RECTANGULAR, TYP. 1 1/2" = 1'-0" | 4

FOR BID ONLY

TETER, LLP expressly reserves its common law copyright and other property rights in these plans. This document, the ideas and designs incorporated herein, as an instrument of professional service, is not to be used in whole or part, for any other project without prior written authorization.

MARK	DATE	DESCRIPTION
	11/1/2022	DSA RESUBMITTAL

LICENSED ARCHITECT * VINCENT JOSEPH COMER * No. C-29893 * STATE OF CALIFORNIA

TETER, LLP
FRESNO HEADQUARTERS
VISALIA I BAKERSFIELD I MODESTO I SAN LUIS OBISPO
ARCHITECTS ENGINEERS CONNECTED

TULARE CAMPUS CTE
COLLEGE OF THE SEQUOIAS
4999 E. BARDSLEY AVE.
TULARE, CA

DRAWING TITLE
PILASTER DETAILS

PROJECT NO.
21-12032

DRAWING
A820

PLOT DATE: 11/1/2022 10:06:27 PM

\\tetr-file1\Users\ryan.odom\Documents\12032-A-COS Tulare CTE_ryan.odomNLB27.rvt

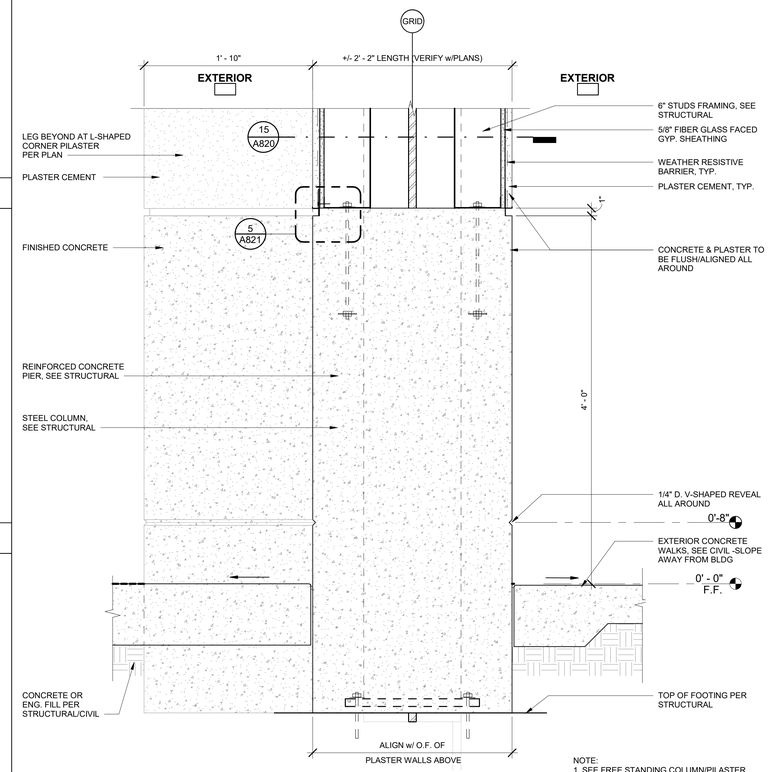

NOTE:
1. SEE FREE STANDING COLUMN/PILASTER DETAILS ON SHEET A820
2. ALIGN FACE OF PLASTER WALLS & CONCRETE PIERS

CONCRETE PIERS AT FREE-STANDING PILASTERS

1 1/2" = 1'-0" | 13

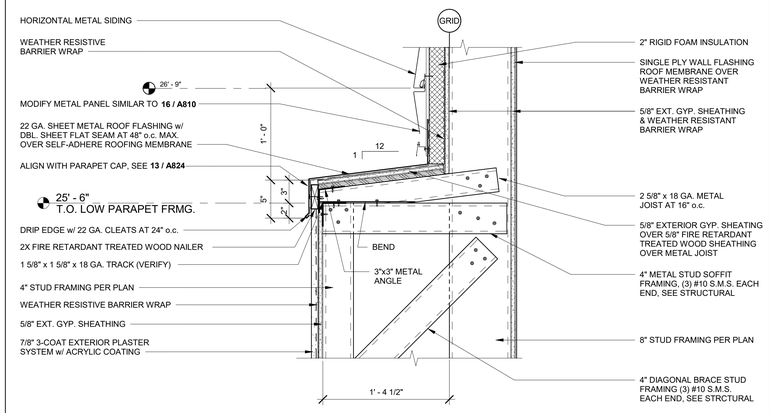

TOP OF PILASTER/SOFFIT AT WALL SECTION

1 1/2" = 1'-0" | 2

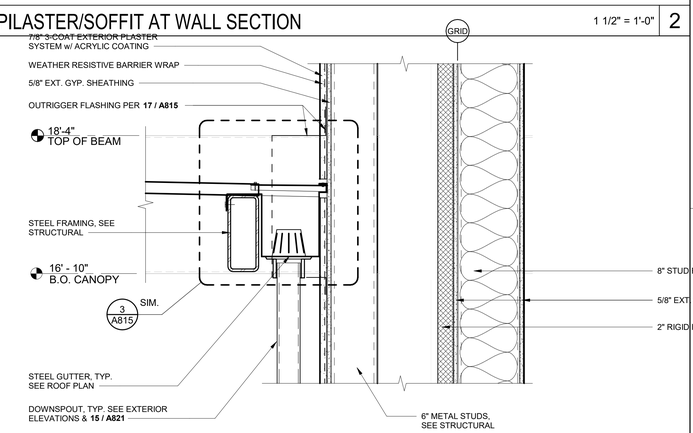

GUTTER AT PILASTER, TYP.

1 1/2" = 1'-0" | 3

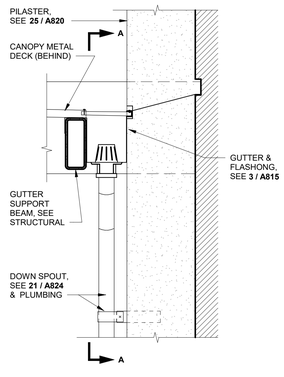

SIDE
SECTION/ELEVATION

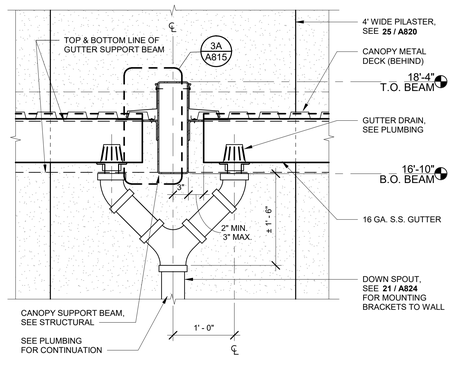

FRONT
SECTION/ELEVATION A-A

GUTTER & DOWNSPOUT AT PILASTER (SIM. AT METAL WALL PANELS)

1" = 1'-0" | 15

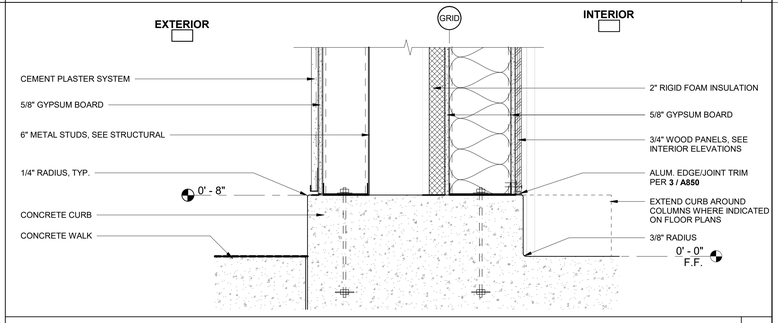

BASE OF PILASTER AT WALL SECTION

1 1/2" = 1'-0" | 4

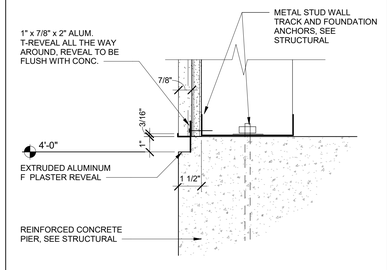

PILASTER REVEAL AT TOP OF CONC. PIERS

3" = 1'-0" | 5

FOR BID ONLY

Teter, LLP expressly reserves its common law copyright and other property rights in these plans. This document, the ideas and designs incorporated herein, as an instrument of professional service, is not to be used in whole or part, for any other project without prior written authorization.

MARK	DATE	DESCRIPTION
	11/1/2022	DSA RESUBMITTAL

TETER, LLP
ARCHITECTS ENGINEERS CONNECTED
FRESNO HEADQUARTERS
VISALIA | BAKERSFIELD | MODESTO | SAN LUIS OBISPO

TULARE CAMPUS CTE
COLLEGE OF THE SEQUOIAS
4999 E. BARDSLEY AVE.
TULARE, CA

DRAWING TITLE
PILASTER DETAILS

PROJECT NO.
21-12032

DRAWING
A821

PLOT DATE: 11/1/2022 10:06:34 PM

\\tetr-file1\Users\ryan.odom\Documents\12032-A-COS Tulare CTE_ryan.odomNLB27.rvt

EXTERIOR INTERIOR

6' - 9"
5' - 8"
4' - 9"
3' - 9"
2' - 9"
1' - 9"
0' - 8"

6 MX 2.0
5 MX 1.0
4 MX 2.0
3 MX 8.0
2 MX 1.0
1 MX 8.0

12" NOMINAL COVERAGE
2" 2" 6"
PROFILE MX 2.0

12" NOMINAL COVERAGE TYP.
2" 2" 2" 2" 2"
PROFILE MX 1.0

12" NOMINAL COVERAGE
10"
PROFILE MX 8.0

PANEL PROFILES
PROVIDE RADIUSED PANELS AT CURED WALLS WHERE INDICATED

BOTTOM HEIGHT OF FIRST COURSE OF SIX PANELS (TO BE REPEATED ABOVE IN SAME ORDER)

ORDER OF PANEL PROFILES IN SEGMENTS OF 6 PANELS FROM BOTTOM TO TOP

TYPE 2 HORIZ. METAL PANELS & LAYOUT PATTERN 3" = 1'-0" | 24

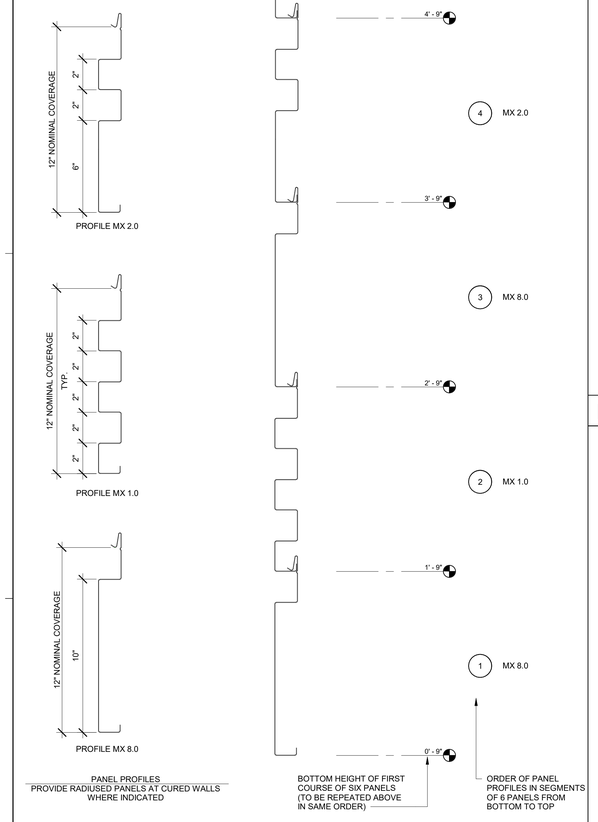

WALL TYPE 6D

INT. - 6" METAL STUD - 6D 3" = 1'-0" | 12

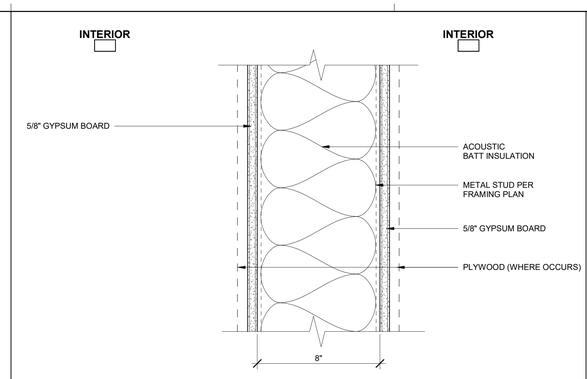

WALL TYPE 8E

INT. - 8" METAL STUD - 8E 3" = 1'-0" | 7

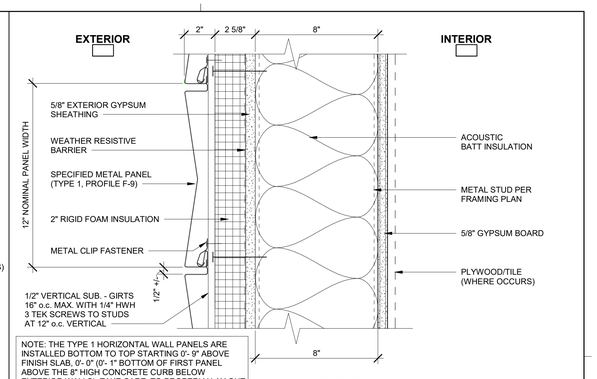

NOTE: THE TYPE 1 HORIZONTAL WALL PANELS ARE INSTALLED BOTTOM TO TOP STARTING 0'- 9" ABOVE FINISH SLAB, 0'- 0" (0'- 1" BOTTOM OF FIRST PANEL ABOVE THE 8" HIGH CONCRETE CURB BELOW EXTERIOR WALLS). TAKE CARE TO PROPERLY LAY OUT PANELS TO DEVIATE NO MORE THAN 1/16" IN 10' AND 1/4" OVERALL FROM LEVEL AND VERTICAL SPACING.

WALL TYPE 8A

EXT. - 8" MTL. STUD WALL AT TYPE 1 METAL PANELS - 8A 3" = 1'-0" | 2

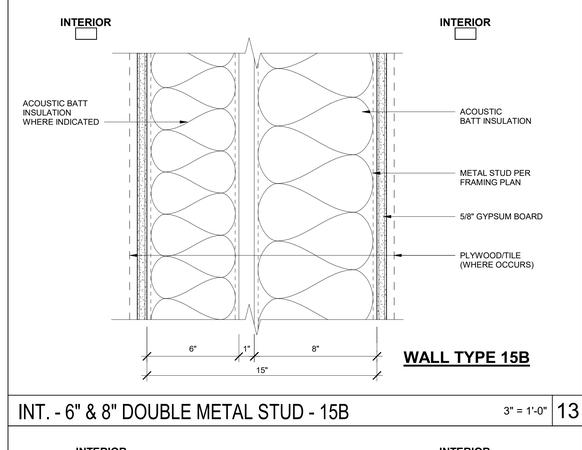

WALL TYPE 15B

INT. - 6" & 8" DOUBLE METAL STUD - 15B 3" = 1'-0" | 13

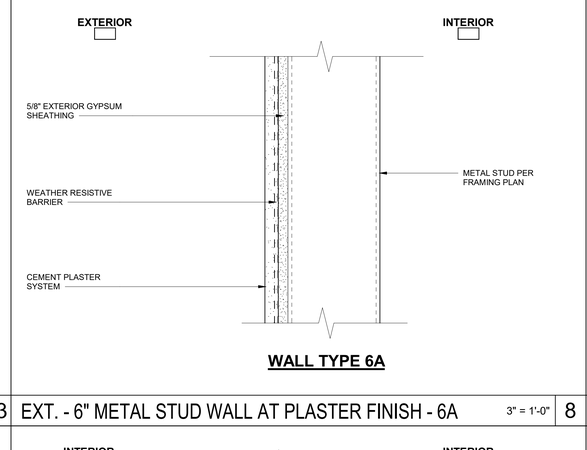

WALL TYPE 6A

EXT. - 6" METAL STUD WALL AT PLASTER FINISH - 6A 3" = 1'-0" | 8

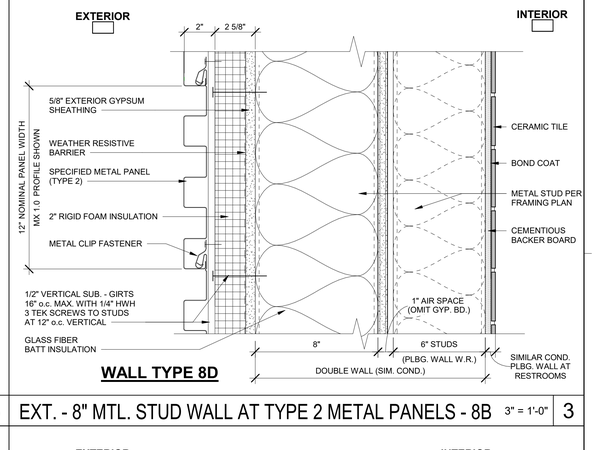

WALL TYPE 8D

EXT. - 8" MTL. STUD WALL AT TYPE 2 METAL PANELS - 8B 3" = 1'-0" | 3

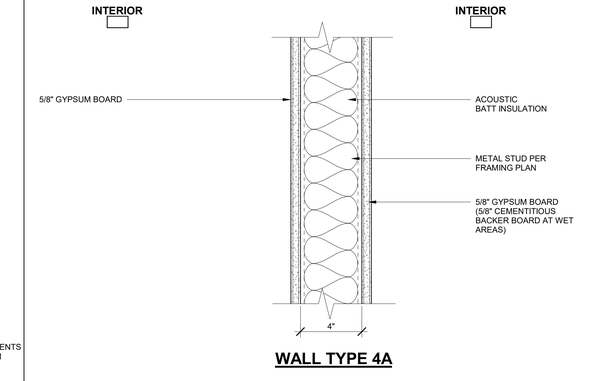

WALL TYPE 4A

INT. - 4" METAL STUD - 4A 3" = 1'-0" | 15

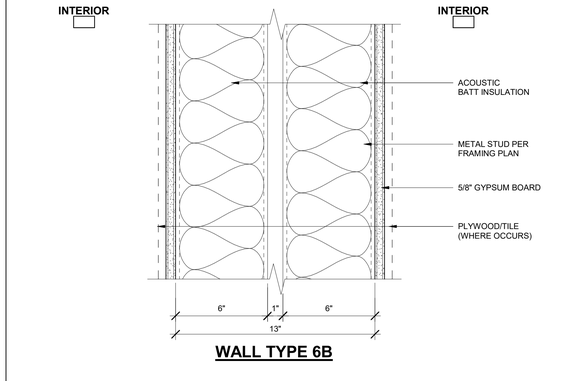

WALL TYPE 6B

INT. - 6" DOUBLE METAL STUD - 6B 3" = 1'-0" | 9

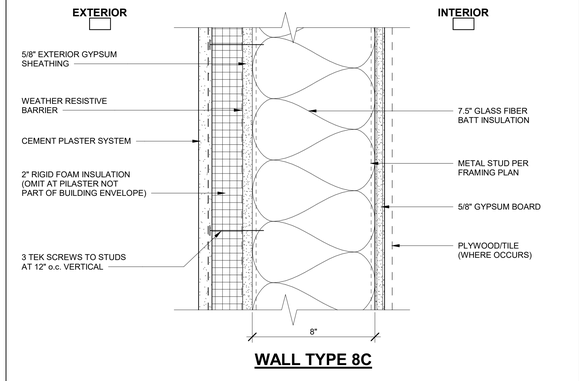

WALL TYPE 8C

EXT. - 8" METAL STUD WALL AT PLASTER FINISH - 8C 3" = 1'-0" | 4

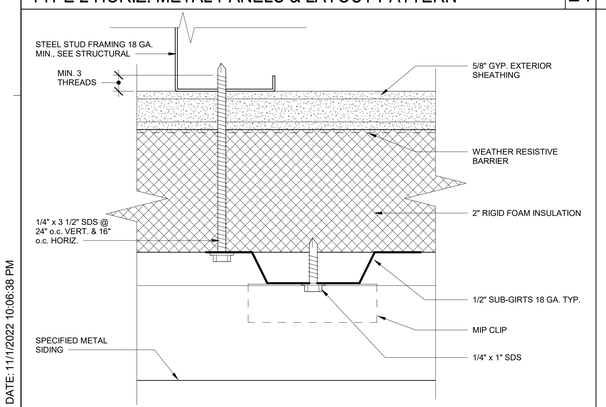

TYPICAL METAL PANEL ANCHORAGE FASTENERS FULL SCALE | 25

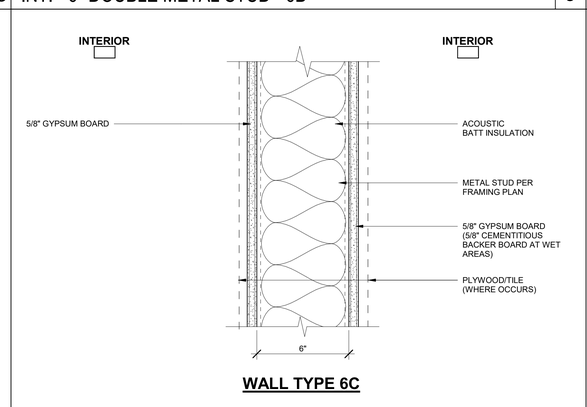

WALL TYPE 6C

INT. - 6" METAL STUD - 6C 3" = 1'-0" | 10

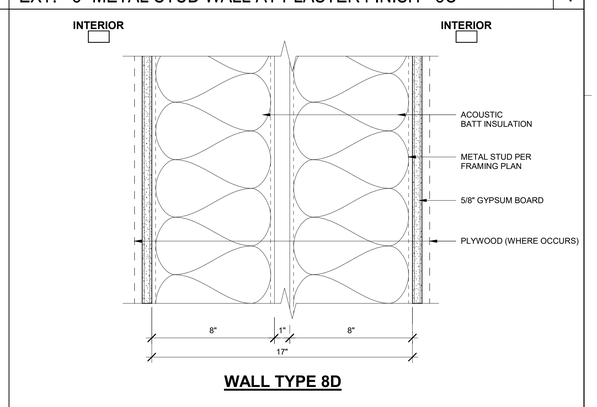

WALL TYPE 8D

INT. - 8" DOUBLE METAL STUD - 8D 3" = 1'-0" | 5

PLOT DATE: 11/1/2022 10:06:38 PM

FOR BID ONLY

Teter, LLP expressly reserves its common law copyright and other property rights in these plans. This document, the ideas and designs incorporated herein, as an instrument of professional service, is not to be used in whole or part, for any other project without prior written authorization.

MARK	DATE	DESCRIPTION
	11/1/2022	DSA RESUBMITTAL

LICENSED ARCHITECT ★ VINCENT JOSEPH LOMBARDI ★ No. C-23423 ★ STATE OF CALIFORNIA

TETER, LLP
ARCHITECTS ENGINEERS CONNECTED
FRESNO HEADQUARTERS
VISALIA | BAKERSFIELD | MODESTO | SAN LUIS OBISPO

TETER

TULARE CAMPUS CTE
COLLEGE OF THE SEQUOIAS
4999 E. BARDSLEY AVE.
TULARE, CA

DRAWING TITLE
WALL TYPES

PROJECT NO.
21-12032

DRAWING
A822

\\tet-file1\Users\ryan.odom\Documents\12032-A-COS Tulare CTE_ryan.odomNLB27.rvt

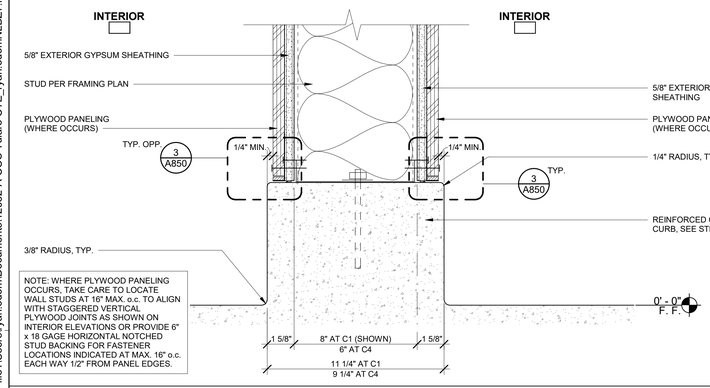

INT. CONCRETE CURB - TYPE C1 &C4

3" = 1'-0" | 22

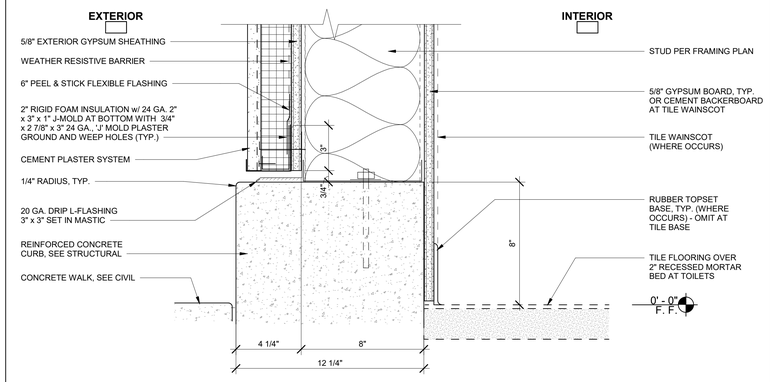

EXT. CONCRETE CURB - TYPE A5 @ CEMENT PLASTER

3" = 1'-0" | 12

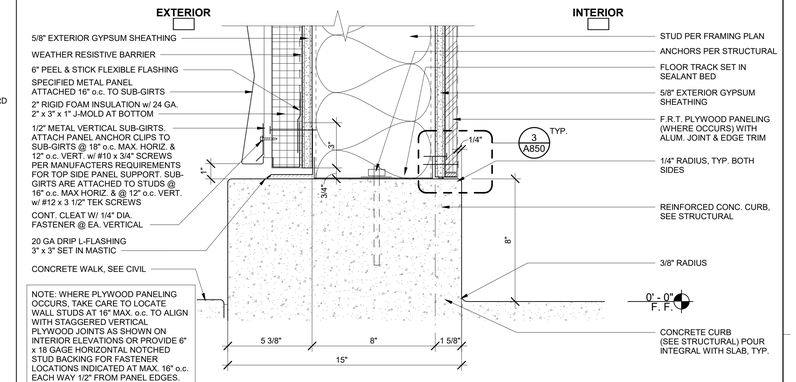

EXT. CONCRETE CURB TYPE A1 @ METAL SIDING

3" = 1'-0" | 2

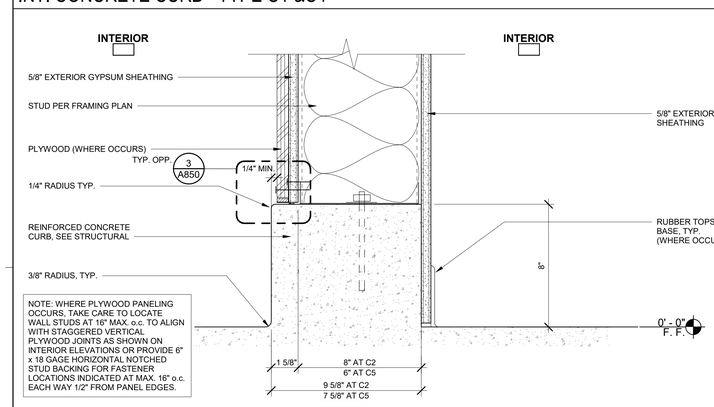

INT. CONCRETE CURB - TYPE C2 & C5

3" = 1'-0" | 23

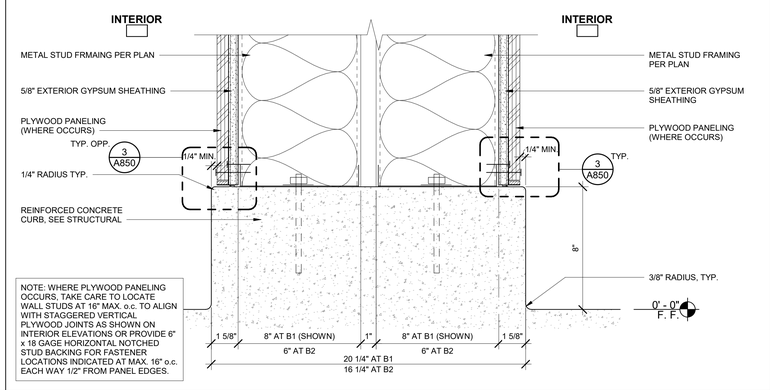

INT. 8" DOUBLE STUD CONCRETE CURB - TYPE B1 & B2

3" = 1'-0" | 13

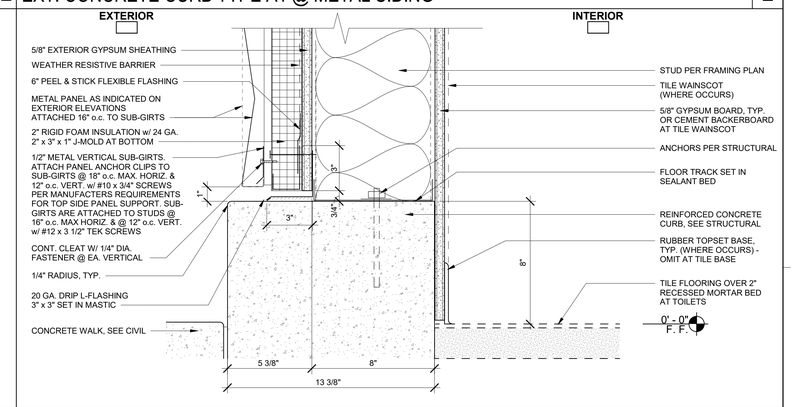

EXT. CONCRETE CURB - TYPE A2 @ METAL SIDING (TYPE 2 SIDING SIM.)

3" = 1'-0" | 3

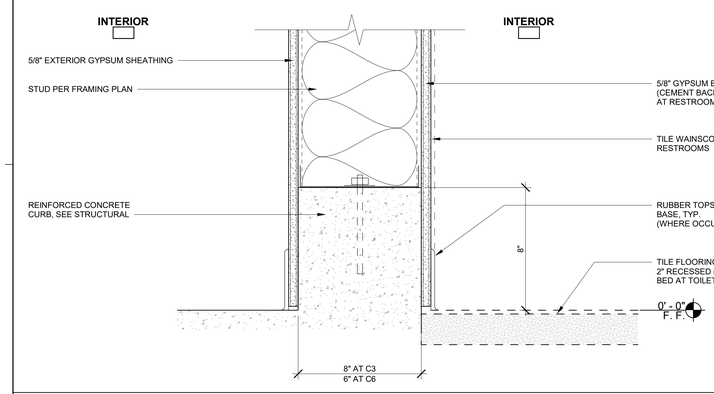

INT. - NO RAISED CURB - TYPE D

3" = 1'-0" | 25

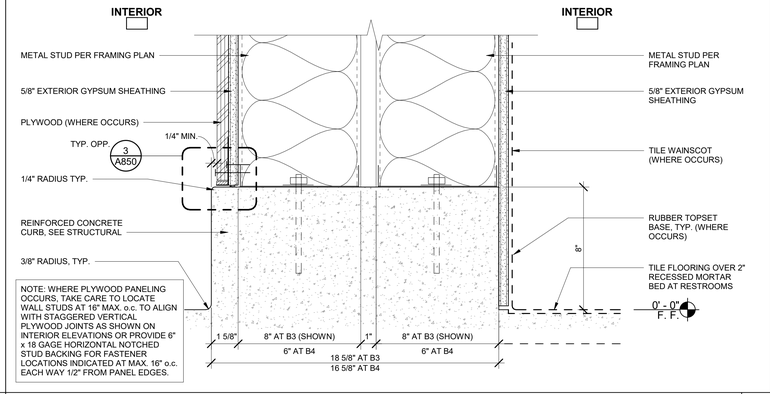

INT. 8" DOUBLE STUD CONCRETE CURB - TYPE B3 & B4

3" = 1'-0" | 14

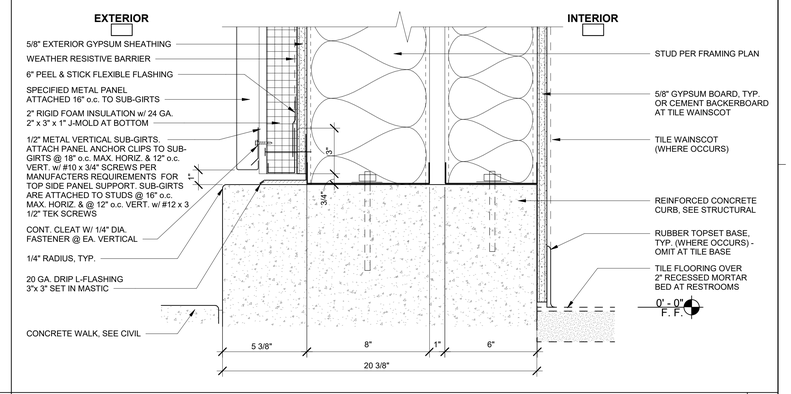

EXT. CONCRETE CURB - TYPE A3 @ METAL SIDING

3" = 1'-0" | 4

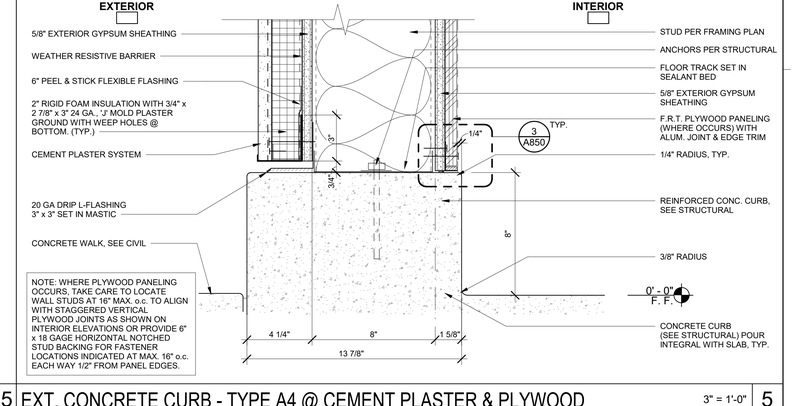

EXT. CONCRETE CURB - TYPE A4 @ CEMENT PLASTER & PLYWOOD

3" = 1'-0" | 5

FOR BID ONLY

MARK	DATE	DESCRIPTION
	11/1/2022	DSA RESUBMITTAL

Teter, LLP expressly reserves its common law copyright and other property rights in these plans. This document, the ideas and designs incorporated herein, as an instrument of professional service, is not to be used in whole or in part, for any other project without prior written authorization.

TETER, LLP
ARCHITECTS ENGINEERS CONNECTED
FRESNO HEADQUARTERS
VISALIA | BAKERSFIELD | MODESTO | SAN LUIS OBISPO

TULARE CAMPUS CTE
COLLEGE OF THE SEQUOIAS
4999 E. BARDSLEY AVE.
TULARE, CA

DRAWING TITLE
CURB TYPES

PROJECT NO.
21-12032

DRAWING
A823

PLOT DATE: 11/1/2022 10:06:43 PM

\\tetr-file1\Users\ryan.odom\Documents\12032-A-COS Tulare CTE_ryan.odomNLB27.rvt

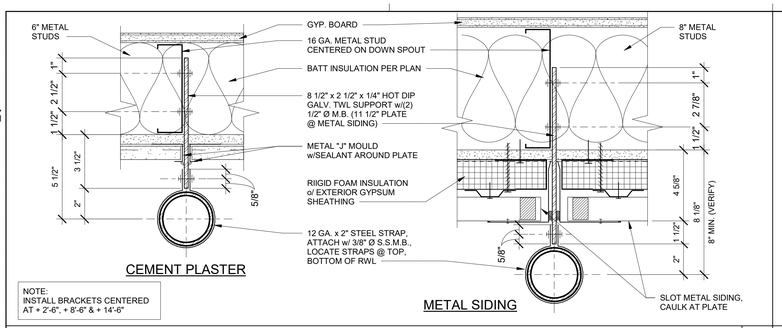

DOWNSPOUT LEADER CONNECTION — 3" = 1'-0" — 21

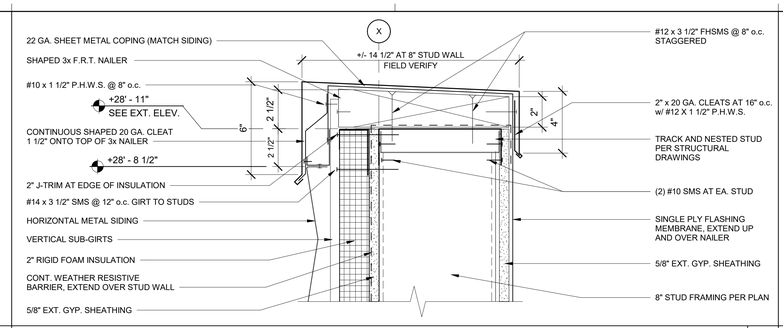

PARAPET COPING AT METAL SIDING - TYPE 1 — 3" = 1'-0" — 11

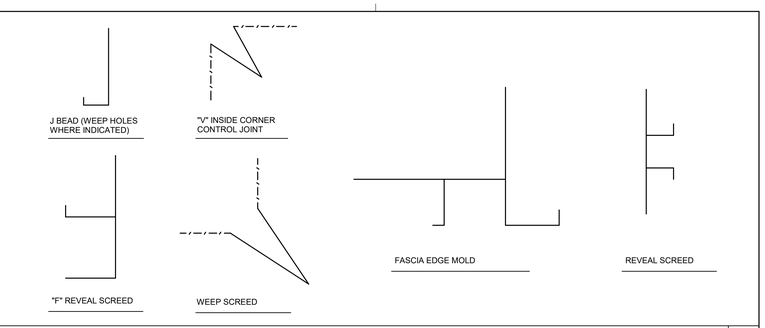

CEMENT PLASTER ACCESSORIES — 12" = 1'-0" — 1

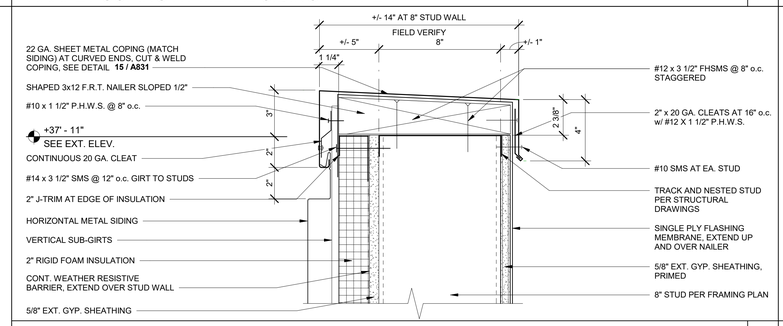

PARAPET COPING AT METAL SIDING - TYPE 2 — 3" = 1'-0" — 12

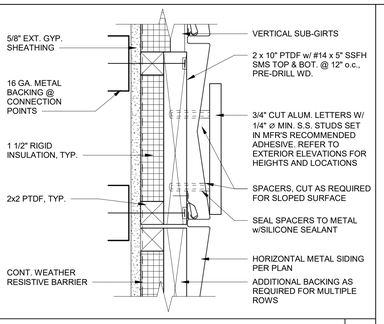

SIGNAGE EXTERIOR MTL SIDING — 3" = 1'-0" — 7

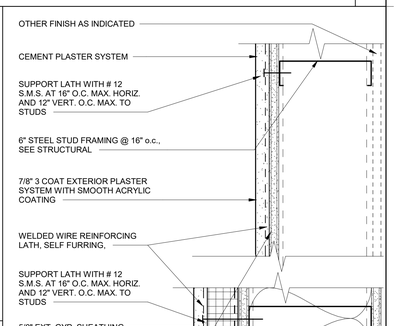

CEMENT PLASTER ATTACHMENT — 3" = 1'-0" — 3

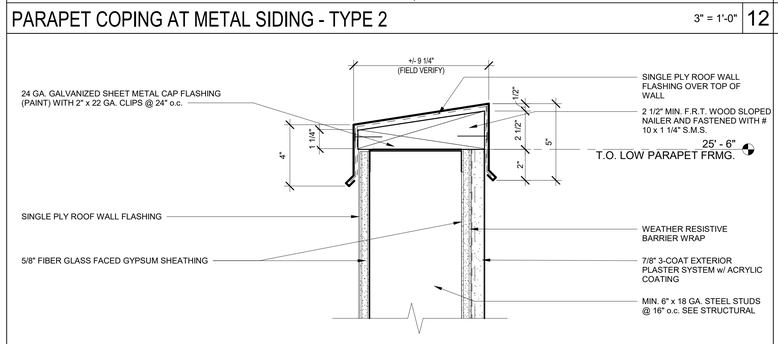

TYP. EXTERIOR PLASTER WALL PARAPET CAP — 3" = 1'-0" — 13

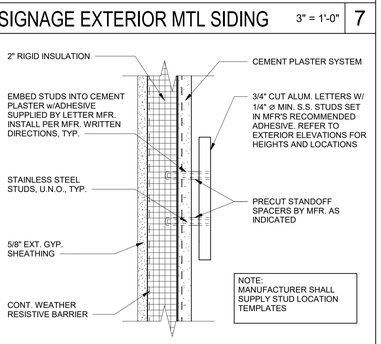

SIGNAGE EXTERIOR PLASTER — 3" = 1'-0" — 8

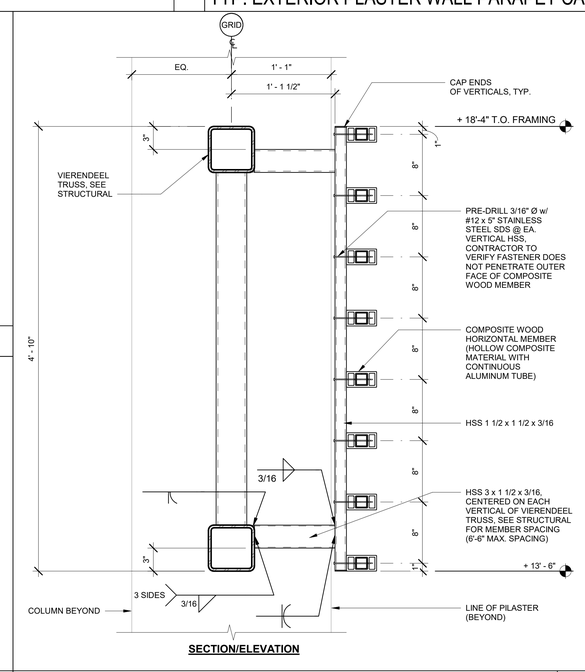

EXTERIOR SUN CONTROL DEVICE — 1 1/2" = 1'-0" — 20

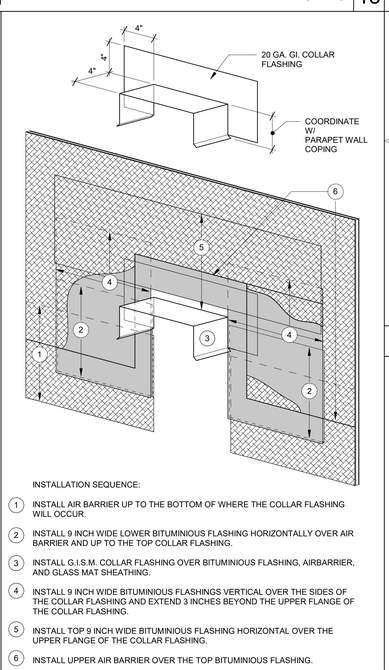

PARAPET TO WALL FLASHING — 1 1/2" = 1'-0" — 15

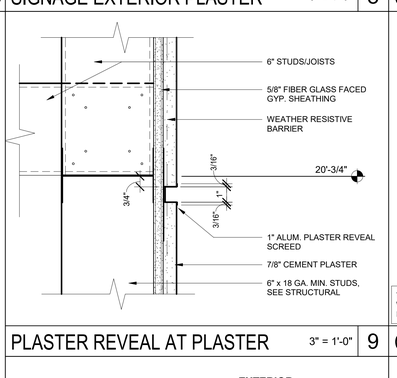

PLASTER REVEAL AT PLASTER — 3" = 1'-0" — 9

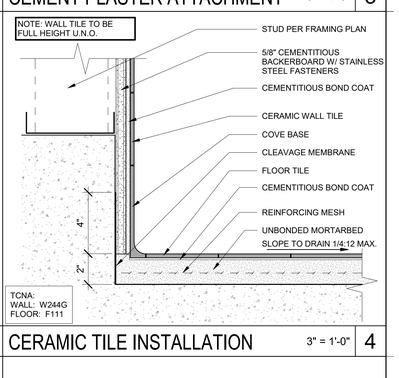

CERAMIC TILE INSTALLATION — 3" = 1'-0" — 4

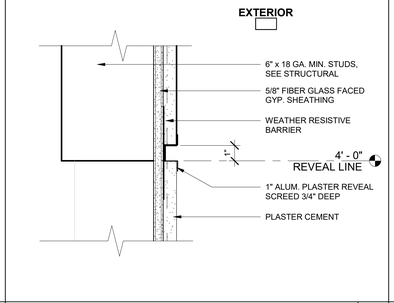

COLUMN PLASTER REVEAL — 3" = 1'-0" — 10

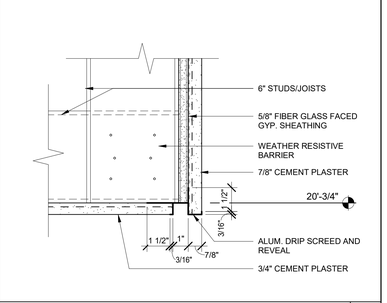

EXT. SOFFIT CORNER — 3" = 1'-0" — 5

PLOT DATE: 11/1/2022 10:06:50 PM

FOR BID ONLY

Teter, LLP expressly reserves its common law copyright and other property rights in these plans. This document, the ideas and designs incorporated herein, as an instrument of professional service, is not to be used in whole or in part, for any other project without prior written authorization.

MARK	DATE	DESCRIPTION
	11/1/2022	DSA RESUBMITTAL

TETER, LLP
ARCHITECTS ENGINEERS CONNECTED
FRESNO HEADQUARTERS
VISALIA | BAKERSFIELD | MODESTO | SAN LUIS OBISPO

TULARE CAMPUS CTE
COLLEGE OF THE SEQUOIAS
4999 E. BARDSLEY AVE.
TULARE, CA

DRAWING TITLE
DETAILS

PROJECT NO.
21-12032

DRAWING
A824

\\tetr-file1\Users\ryan.odom\Documents\12032-A-COS Tulare CTE_ryan.odomNLB27.rvt

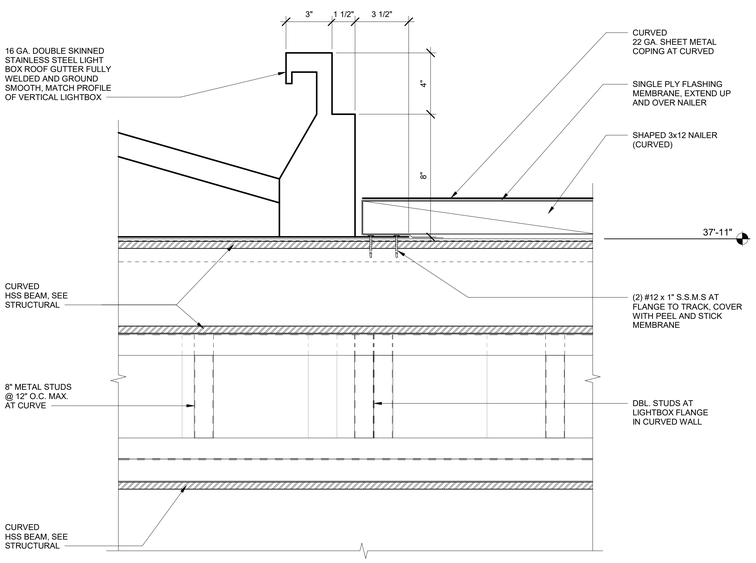

LIGHT BOX ROOF GUTTER SECTION - SIDE 3" = 1'-0" | 22

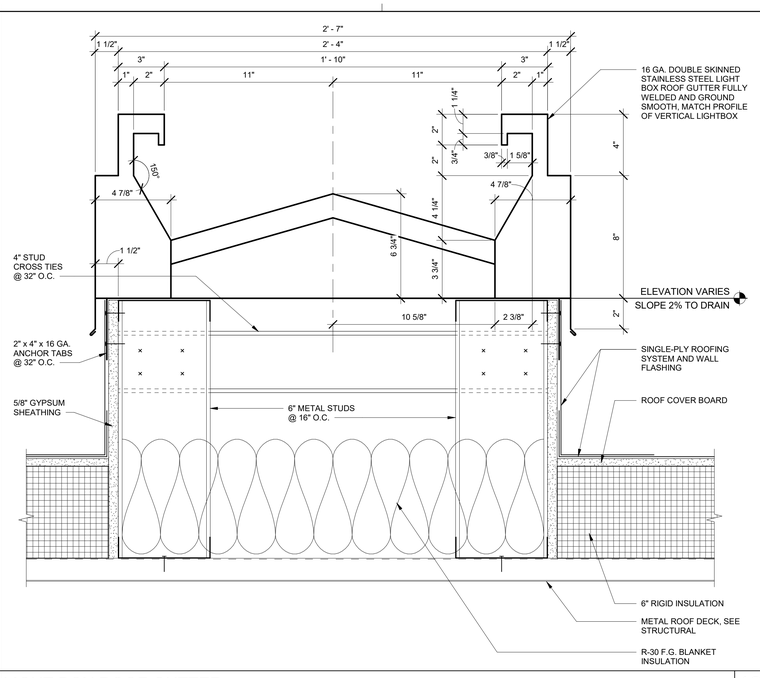

LIGHT BOX ROOF GUTTER 3" = 1'-0" | 12

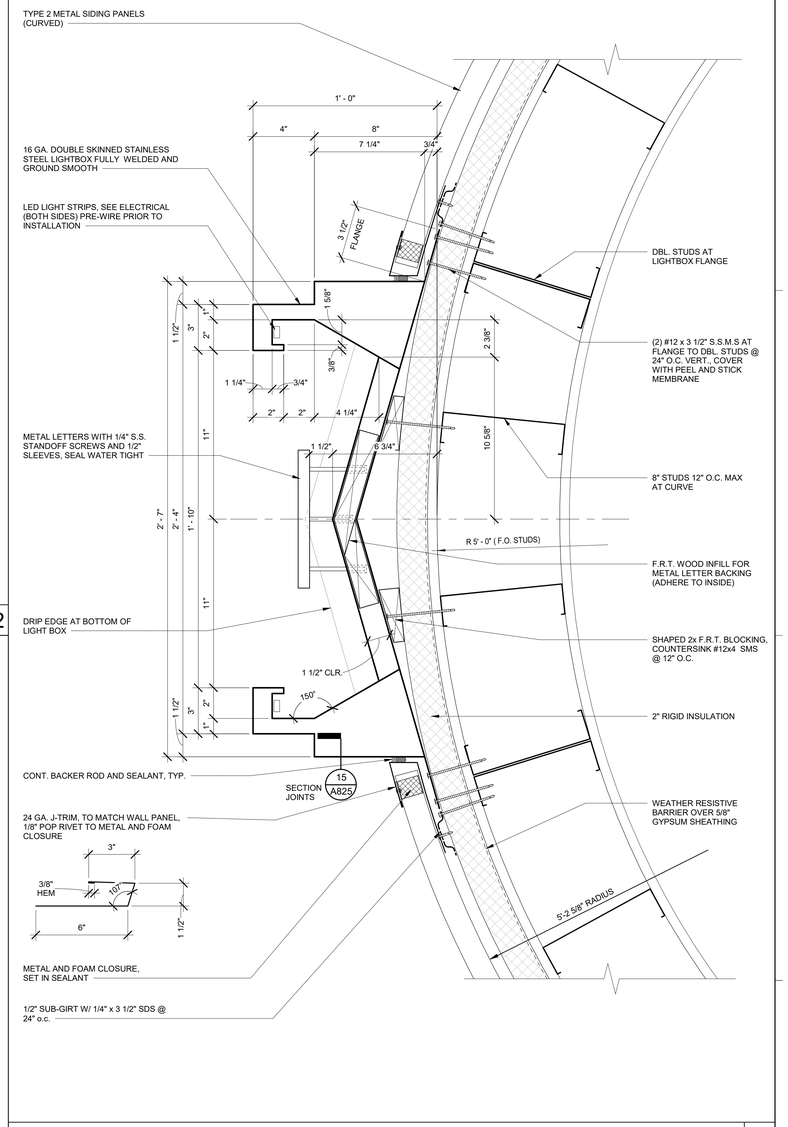

VERTICAL LIGHT BOX AT FACE OF ENTRY TOWER 3" = 1'-0" | 3

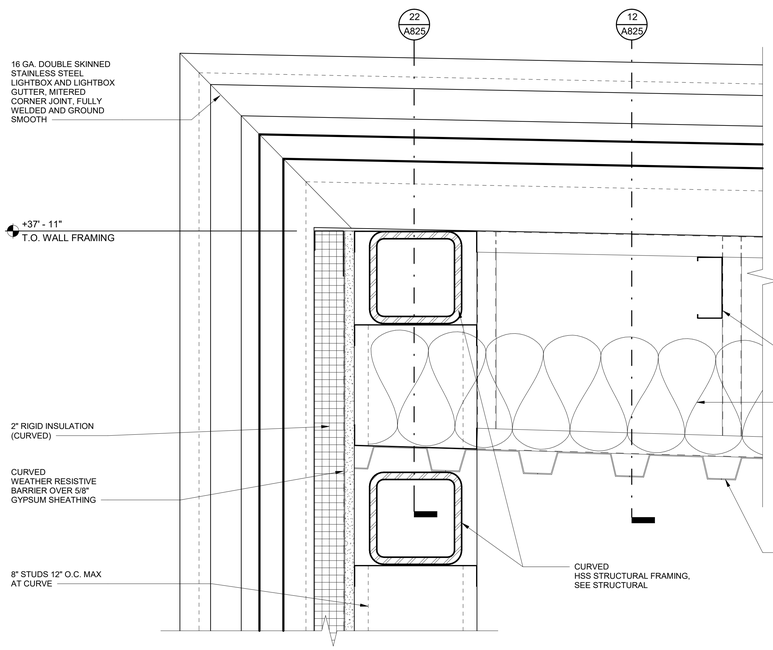

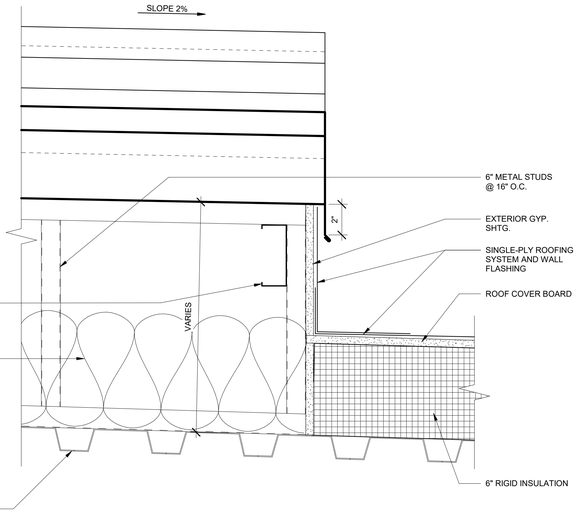

LIGHT BOX ROOF GUTTER SECTION - CENTER 3" = 1'-0" | 14

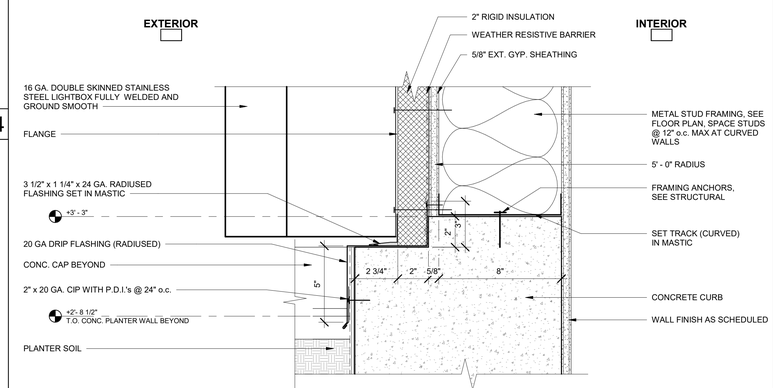

BOTTOM OF VERTICAL LIGHTBOX 3" = 1'-0" | 5

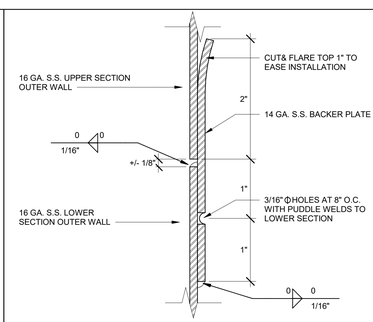

ENLARGED JOINT DETAIL FULL SCALE | 20

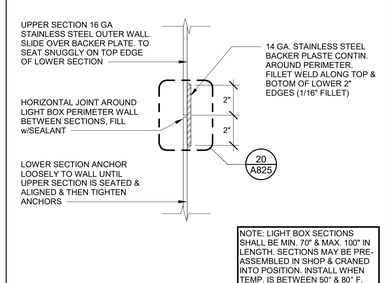

LIGHT BOX SECTION JOINT 3" = 1'-0" | 15

PLOT DATE: 11/1/2022 10:06:53 PM

FOR BID ONLY

Teter, LLP expressly reserves its common law copyright and other property rights in these plans. This document, the ideas and designs incorporated herein, as an instrument of professional service, is not to be used in whole or in part, for any other project without prior written authorization.

MARK	DATE	DESCRIPTION
	11/1/2022	DSA RESUBMITTAL

TETER, LLP
FRESNO HEADQUARTERS
VISALIA | BAKERSFIELD | MODESTO | SAN LUIS OBISPO
ARCHITECTS ENGINEERS CONNECTED

TULARE CAMPUS CTE
COLLEGE OF THE SEQUOIAS
4999 E. BARDSLEY AVE.
TULARE, CA

DRAWING TITLE
DETAILS

PROJECT NO.
21-12032

DRAWING
A825

\\tetr-file1\Users\ryan.odom\Documents\12032-A-COS Tulare CTE_ryan.odomNLB27.rvt

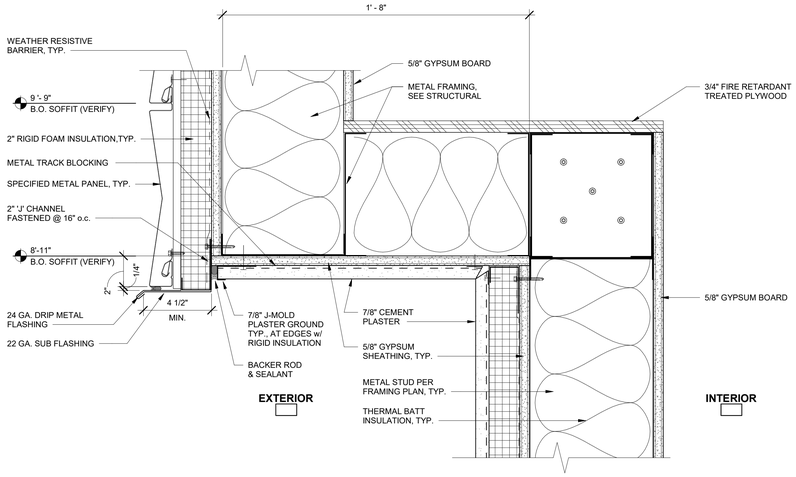

SOFFIT AT DRINKING FOUNTAIN — 3" = 1'-0" — 17

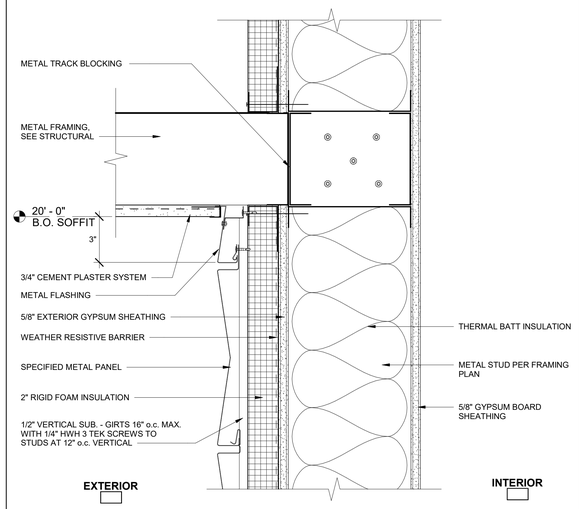

METAL SIDING AT EXTERIOR SOFFIT — 3" = 1'-0" — 12

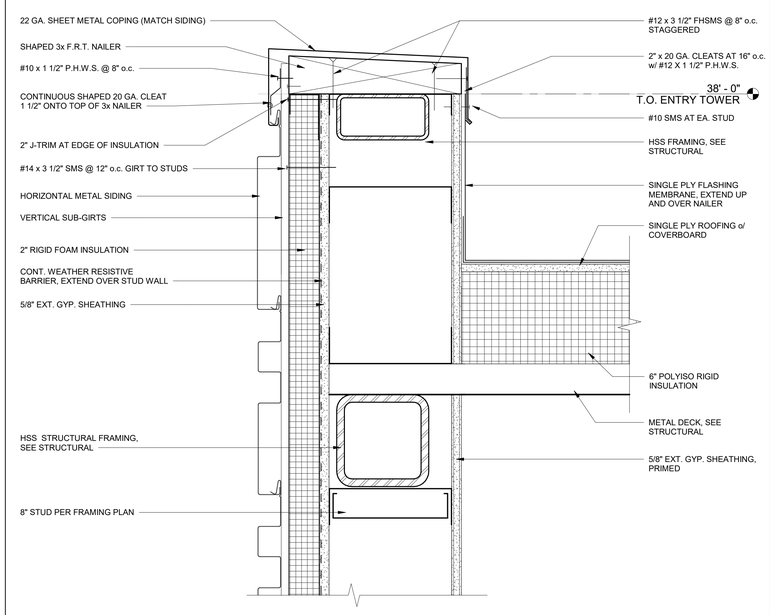

ENTRY TOWER PARAPET — 3" = 1'-0" — 2

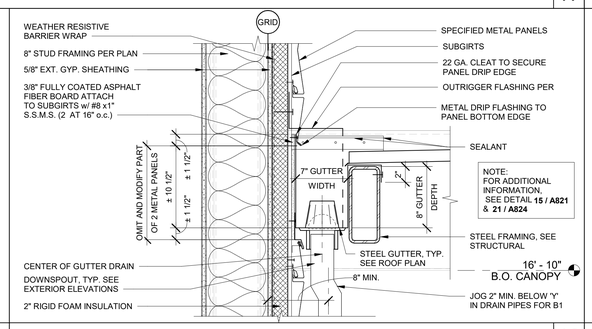

GUTTER AT CANOPY, TYP. — 1 1/2" = 1'-0" — 18

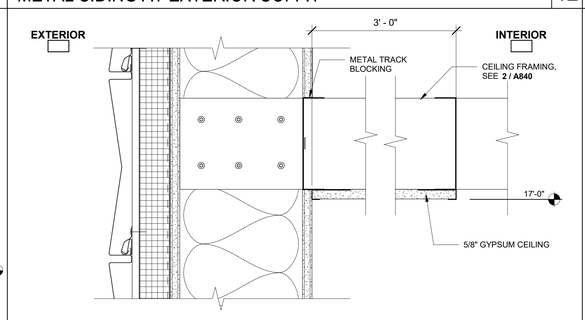

SOFFIT SHELF AT MEETING ROOM — 3" = 1'-0" — 13

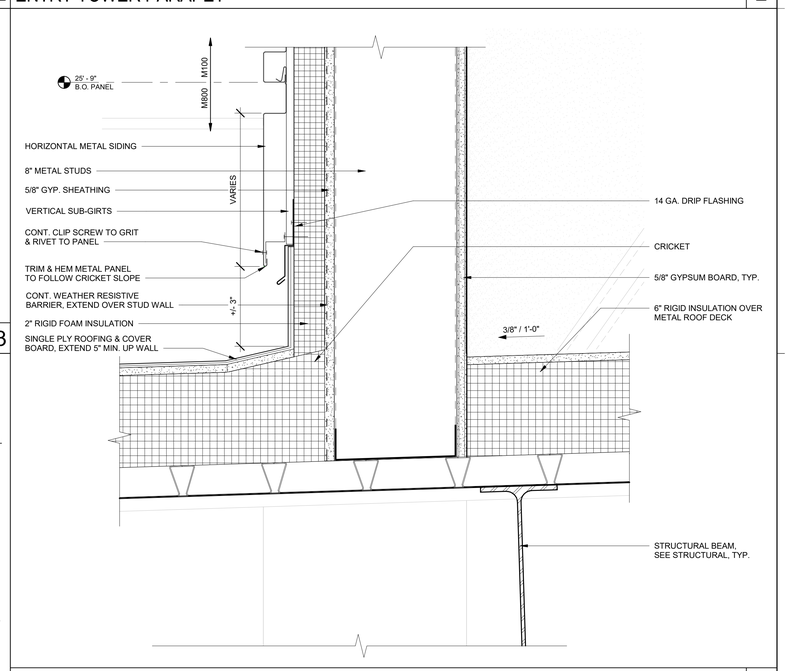

ENTRY TOWER WALL AT MAIN BUILDING ROOF — 3" = 1'-0" — 4

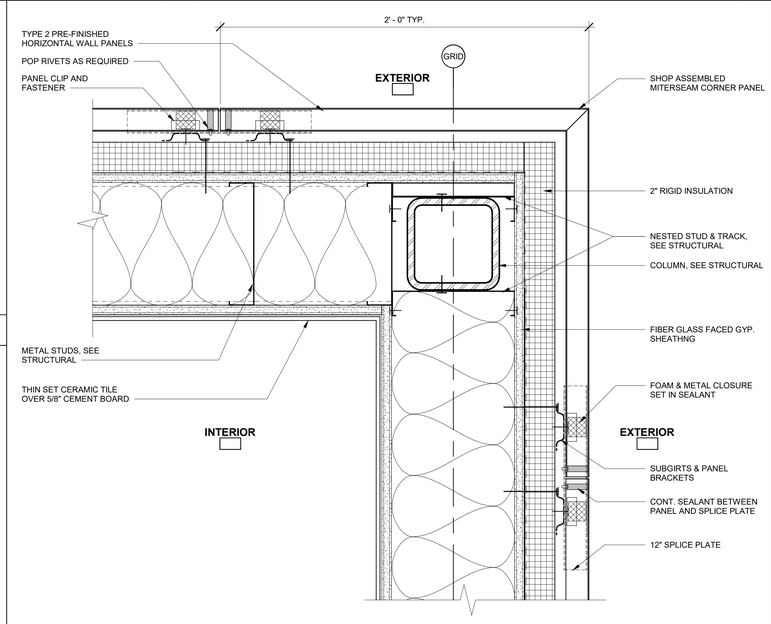

CORNER AT METAL PANELS — 3" = 1'-0" — 15

Tetr, LLP expressly reserves its common law copyright and other property rights in these plans. This document, the ideas and designs incorporated herein, as an instrument of professional service, is not to be used in whole or in part, for any other project without prior written authorization.

FOR BID ONLY

MARK	DATE	DESCRIPTION
	11/1/2022	DSA RESUBMITTAL

LICENSED ARCHITECT * VINOD KUMAR GOUTAM * No. C-23932 * STATE OF CALIFORNIA

TETER, LLP
FRESNO HEADQUARTERS
VISALIA | BAKERSFIELD | MODESTO | SAN LUIS OBISPO
ARCHITECTS ENGINEERS CONNECTED

TETER

TULARE CAMPUS CTE
COLLEGE OF THE SEQUOIAS
4999 E. BARDSLEY AVE.
TULARE, CA

DRAWING TITLE: DETAILS

PROJECT NO. 21-12032

DRAWING A826

PLOT DATE: 11/1/2022 10:07:01 PM

\\tetr-file1\Users\ryan.odom\Documents\12032-A-COS Tulare CTE_ryan.odomNLB27.rvt

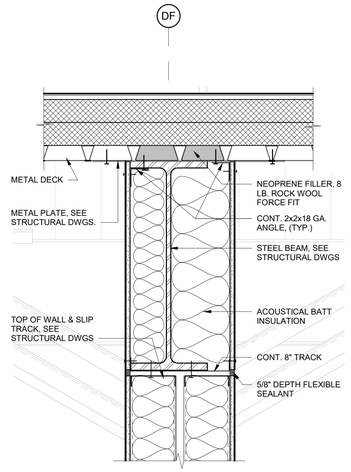

STEEL JOIST AT DOUBLE WALL 1 1/2" = 1'-0" | 11

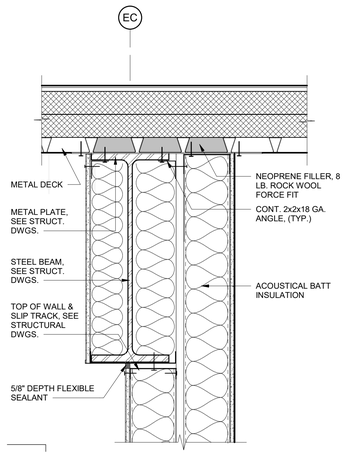

STEEL JOIST AT DOUBLE WALL 1 1/2" = 1'-0" | 13

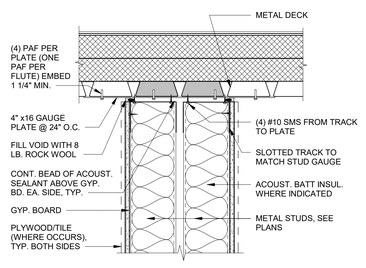

DBL. ACOUSTICAL WALL @ TOP 1 1/2" = 1'-0" | 14

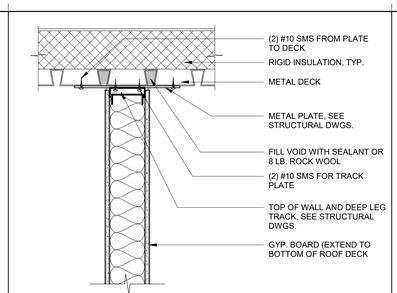

UL SYSTEM NUMBER: HW-D-0264

PARALLEL TO DECK

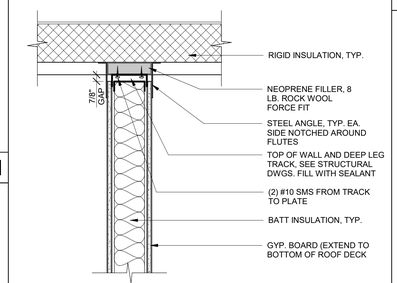

UL SYSTEM NUMBER: HW-D-0042

PERPENDICULAR TO DECK

INT. WALL TO DECK 1 1/2" = 1'-0" | 7

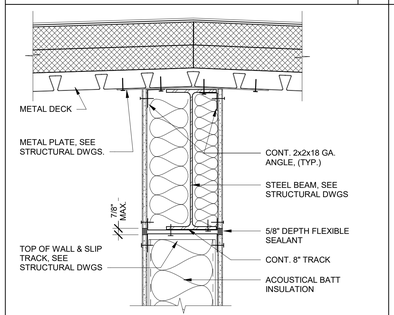

TOP OF WALL AT STRUCT. STEEL 1 1/2" = 1'-0" | 8

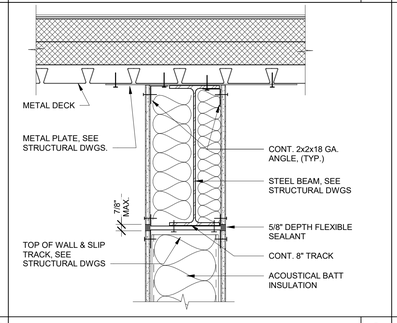

STEEL JOIST ALIGNED AT WALL 1 1/2" = 1'-0" | 9

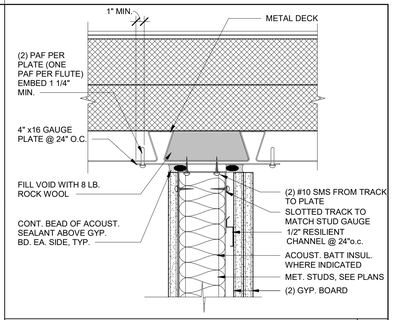

ACOUSTICAL WALL @ TOP 3" = 1'-0" | 1

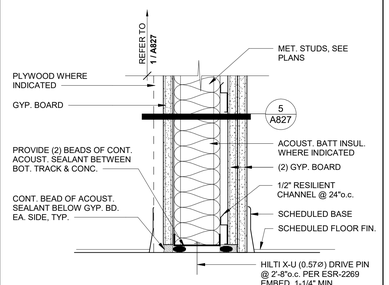

ACOUSTICAL WALL @ BASE 3" = 1'-0" | 2

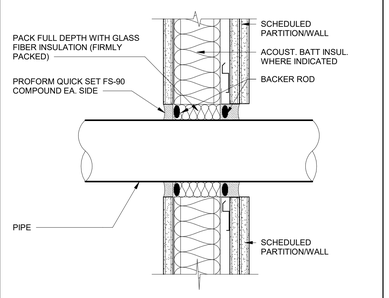

ACOUSTICAL SEAL @ PIPE 3" = 1'-0" | 3

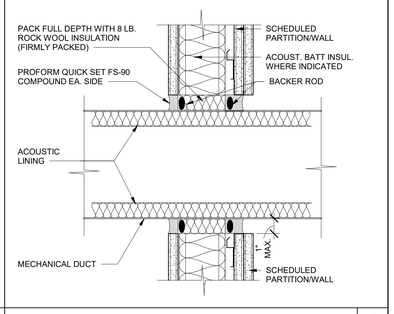

ACOUSTICAL SEAL @ DUCT 3" = 1'-0" | 4

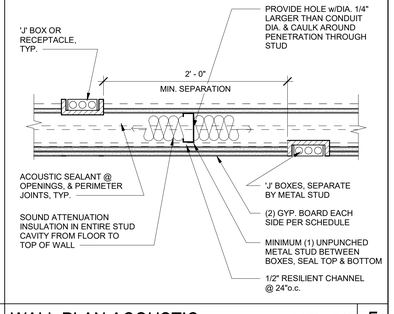

WALL PLAN ACOUSTIC 1 1/2" = 1'-0" | 5

PLOT DATE: 11/1/2022 10:07:07 PM

FOR BID ONLY

Teter, LLP expressly reserves its common law copyright and other property rights in these plans. This document, the ideas and designs incorporated herein, as an instrument of professional service, is not to be used in whole or in part, for any other project without prior written authorization.

MARK	DATE	DESCRIPTION
	11/1/2022	DSA RESUBMITTAL

TETER, LLP
ARCHITECTS ENGINEERS CONNECTED
FRESNO HEADQUARTERS
VISALIA | BAKERSFIELD | MODESTO | SAN LUIS OBISPO

TULARE CAMPUS CTE
COLLEGE OF THE SEQUOIAS
4999 E. BARDSLEY AVE.
TULARE, CA

DRAWING TITLE
TYPICAL DETAILS

PROJECT NO.
21-12032

DRAWING
A827

\\tetr-file1\Users\ryan.odom\Documents\12032-A-COS Tulare CTE_ryan.odomNLB27.rvt

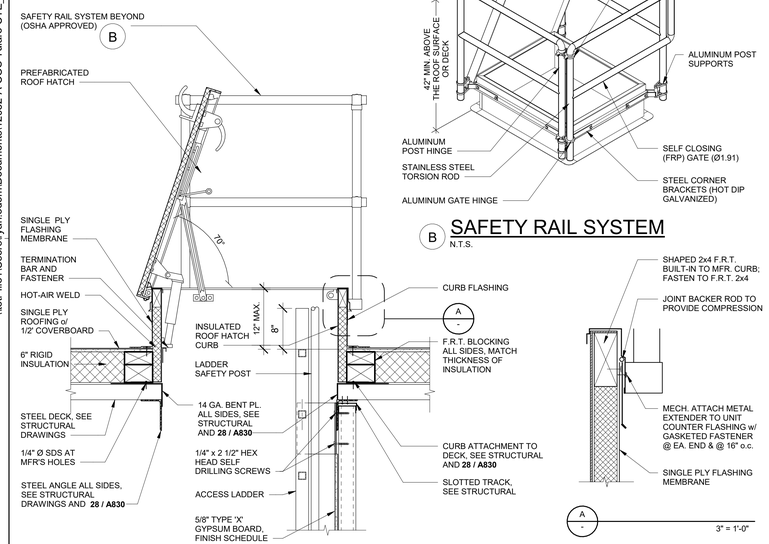

ROOF ACCESS HATCH w/ GUARDRAIL

1" = 1'-0" | 22

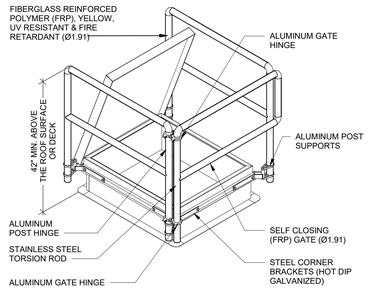

B SAFETY RAIL SYSTEM

N.T.S.

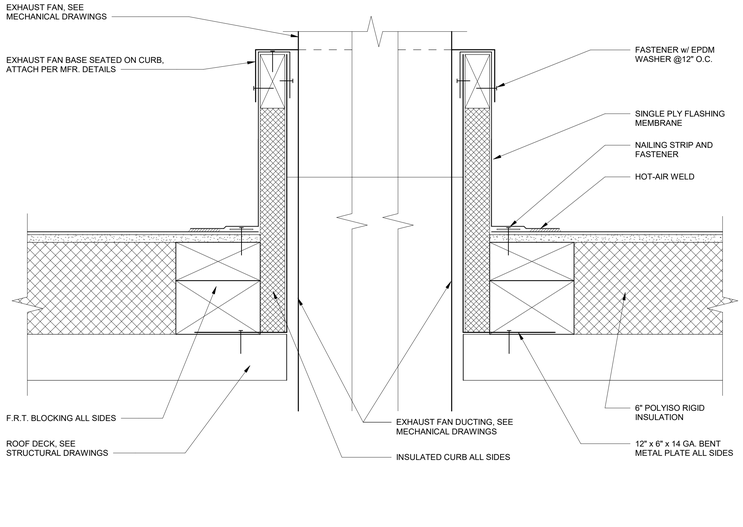

ROOF EXHAUST FAN OPENING

3" = 1'-0" | 12

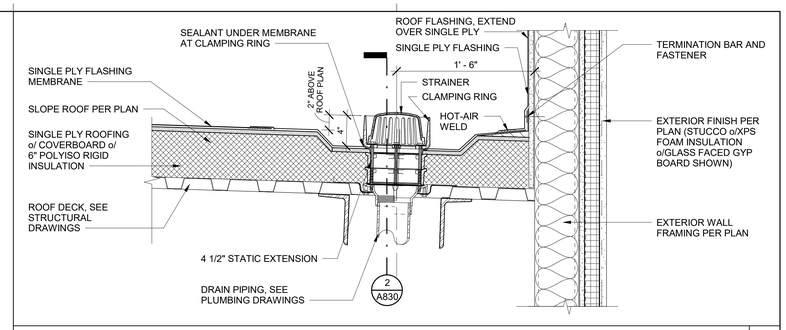

ROOF DRAIN SECTION WITH WALL

1 1/2" = 1'-0" | 1

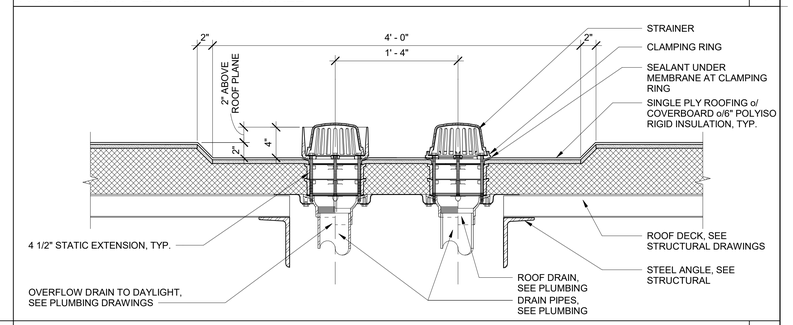

ROOF DRAIN SECTION

1 1/2" = 1'-0" | 2

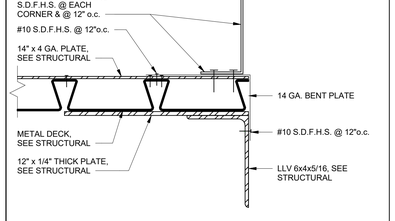

ROOF FRAMING AT HATCH

3" = 1'-0" | 28

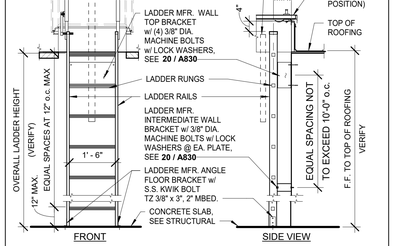

ROOF ACCESS LADDER

1/2" = 1'-0" | 23

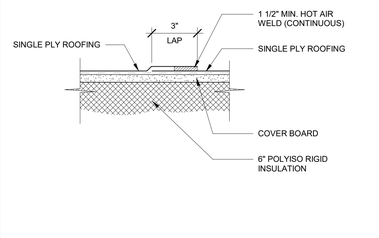

SINGLE PLY SIDE LAP

3" = 1'-0" | 13

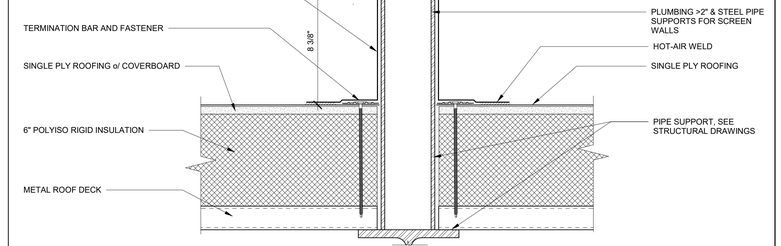

ROOF PIPE FLASHING

3" = 1'-0" | 3

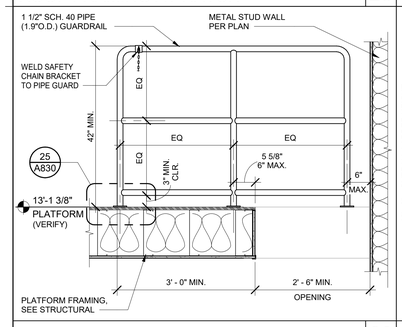

GUARDRAIL ELEVATION AT PLATFORM

3/4" = 1'-0" | 29

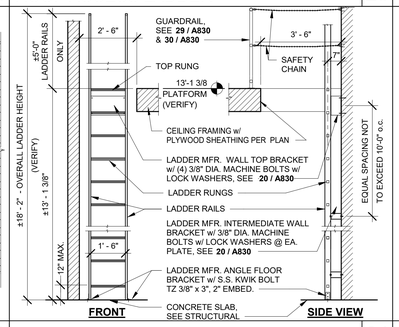

MECH. ACCESS LADDER

3/8" = 1'-0" | 24

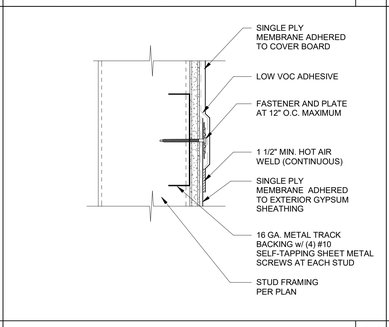

SINGLE PLY LAP AT PARAPET

3" = 1'-0" | 14

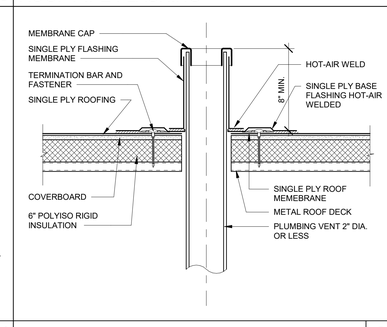

ROOF PIPE FLASHING 2" DIA OR LESS

12" = 1'-0" | 9

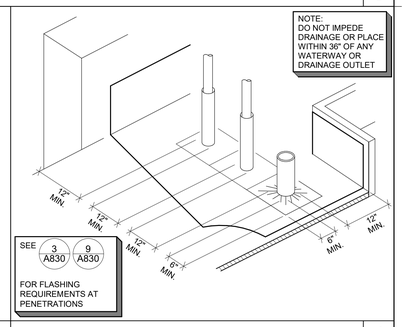

ROOF CLEARANCES TYPICAL

1" = 1'-0" | 4

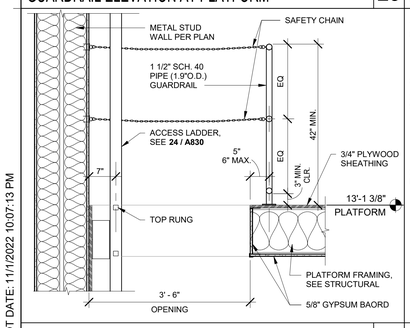

GUARDRAIL AT LADDER/PLATFORM

3/4" = 1'-0" | 30

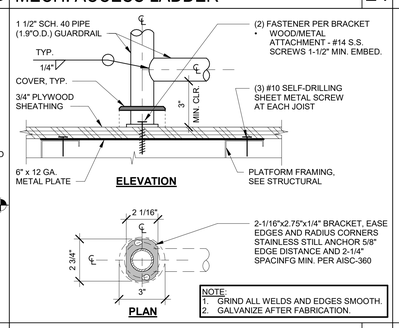

GUARDRAIL ATTACHMENT AT PLATFORM

3" = 1'-0" | 25

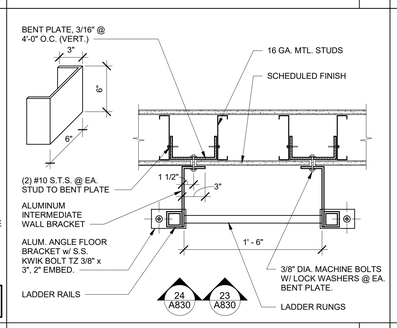

LADDER ATTACHMENT

1 1/2" = 1'-0" | 20

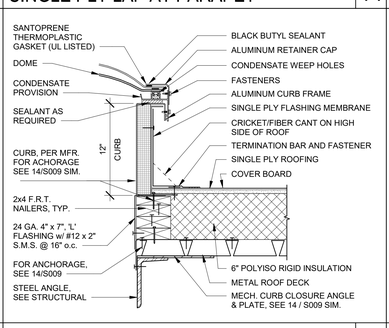

UNIT SKYLIGHT

1 1/2" = 1'-0" | 15

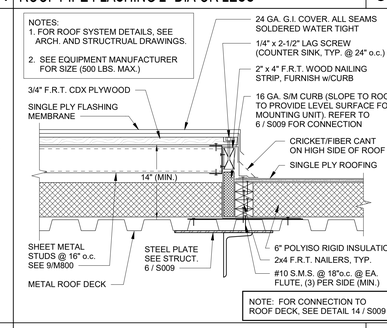

EQUIPMENT PLATFORM

N.T.S. | 10

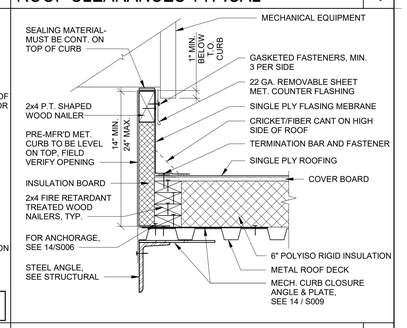

TYP. HVAC EQUIPMENT CURB

1 1/2" = 1'-0" | 5

PLOT DATE: 11/1/2022 10:07:13 PM

FOR BID ONLY

Teter, LLP expressly reserves its common law copyright and other property rights in these plans. This document, the ideas and designs incorporated herein, as an instrument of professional service, is not to be used in whole or part, for any other project without prior written authorization.

MARK	DATE	DESCRIPTION
	11/1/2022	DSA RESUBMITTAL

TETER, LLP
ARCHITECTS ENGINEERS CONNECTED
FRESNO HEADQUARTERS
VISALIA | BAKERSFIELD | MODESTO | SAN LUIS OBISPO

TETER

TULARE CAMPUS CTE
COLLEGE OF THE SEQUOIAS
4999 E. BARDSLEY AVE.
TULARE, CA

PROJECT NO.
21-12032

DRAWING TITLE
ROOFING DETAILS

DRAWING
A830

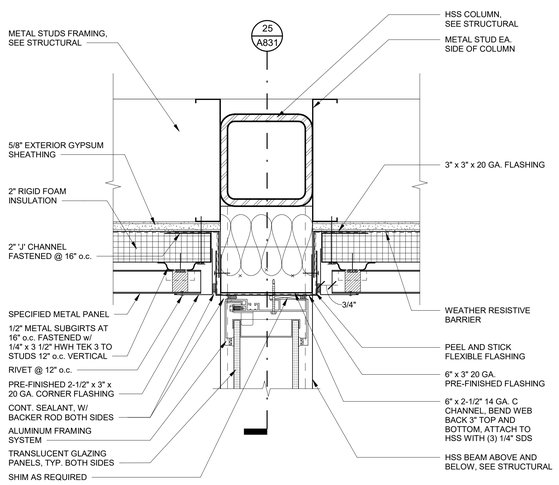

TRANSLUCENT PANEL SCREEN WALL AT WALL 3" = 1'-0" | 22

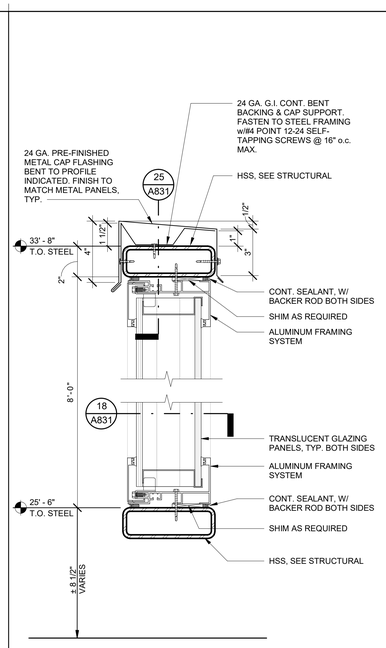

TRANSLUCENT PANEL SCREEN WALL SECT. 3" = 1'-0" | 17

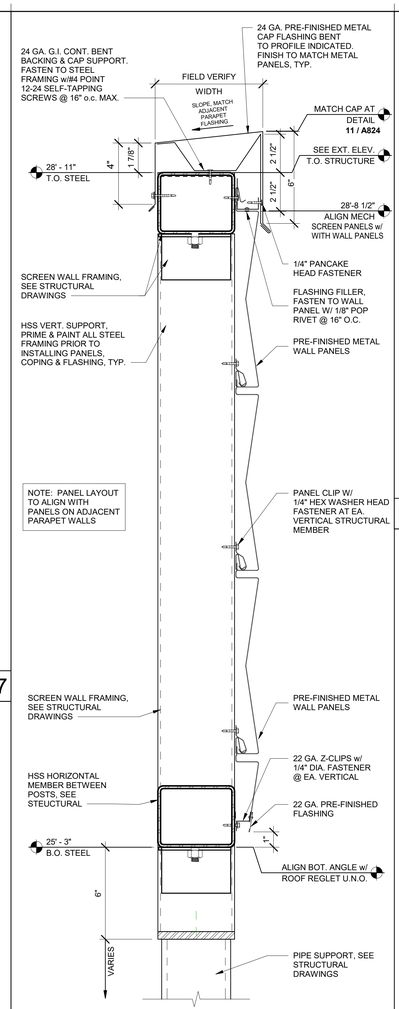

MECH. SCREEN WALL TOP 3" = 1'-0" | 12

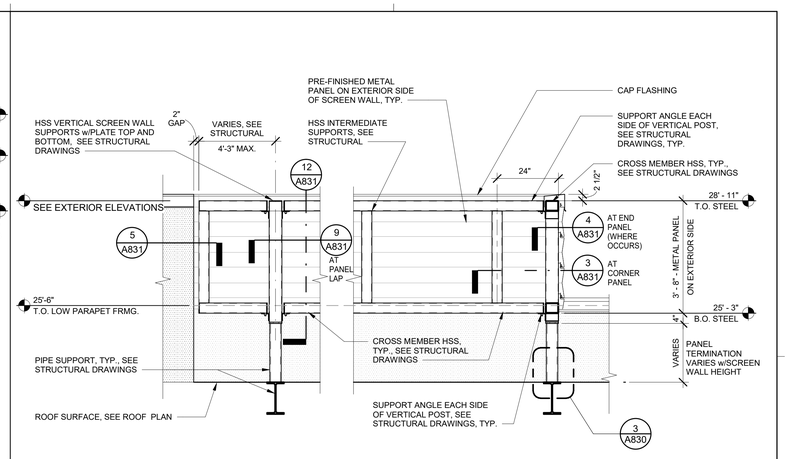

MECHANICAL EQUIPMENT SCREEN ELEVATION 1/2" = 1'-0" | 2

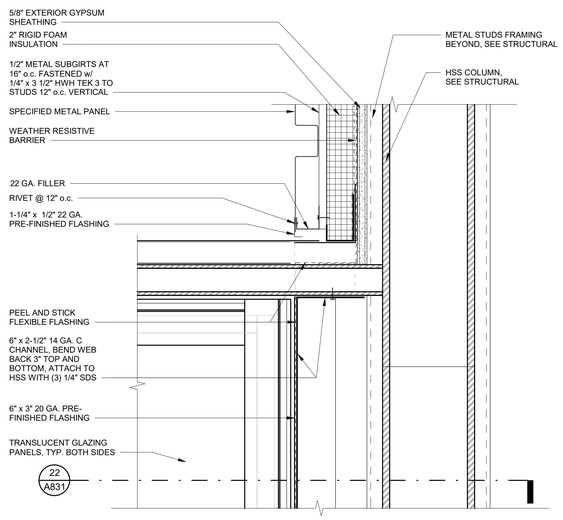

TRANSLUCENT PANEL SCREEN WALL SECTION AT WALL 3" = 1'-0" | 25

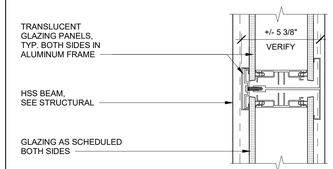

TRANSLUCENT PANEL JOINT 3" = 1'-0" | 18

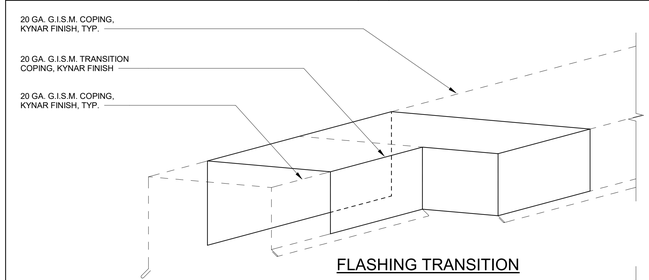

FLASHING TRANSITION

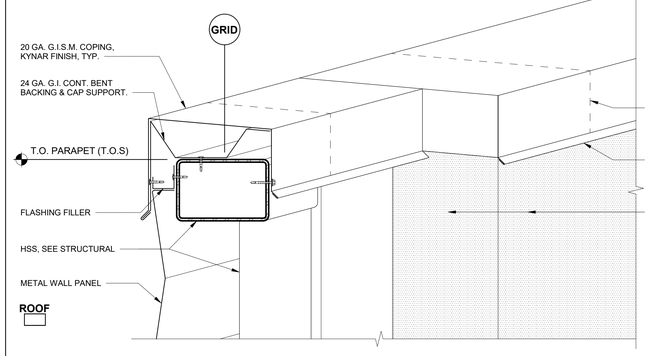

PARAPET COPING TRANSITION 3" = 1'-0" | 15

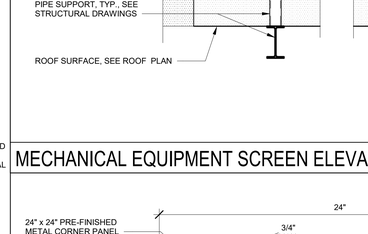

MECH. SCREEN WALL PANEL LAP 3" = 1'-0" | 9

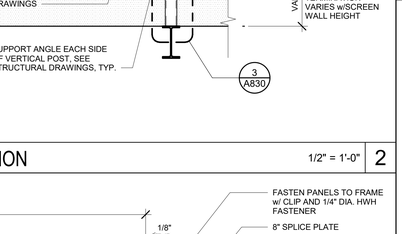

MECH. SCREEN WALL END PANEL 3" = 1'-0" | 4

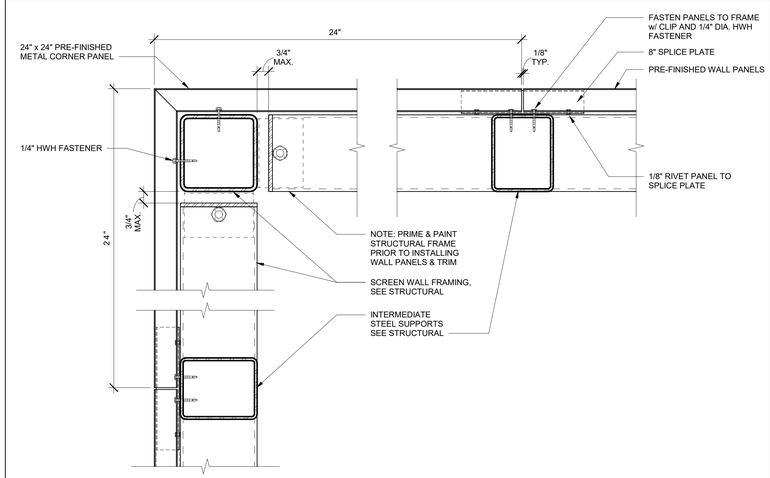

MECH. SCREEN WALL TO PARAPET WALL 3" = 1'-0" | 5

\\tetr-file1\Users\ryan.odom\Documents\12032-A-COS Tulare CTE_ryan.odomNLB27.rvt
PLOT DATE: 11/1/2022 10:07:18 PM
FOR BID ONLY
Teter, LLP expressly reserves its common law copyright and other property rights in these plans. This document, the ideas and designs incorporated herein, as an instrument of professional service, is not to be used in whole or in part, for any other project without prior written authorization.

MARK	DATE	DESCRIPTION
	11/1/2022	DSA RESUBMITTAL

TETER, LLP
FRESNO HEADQUARTERS
VISALIA | BAKERSFIELD | MODESTO | SAN LUIS OBISPO
ARCHITECTS ENGINEERS CONNECTED

TULARE CAMPUS CTE
COLLEGE OF THE SEQUOIAS
4999 E. BARDSLEY AVE.
TULARE, CA

DRAWING TITLE
ROOF DETAILS - MECHANICAL SCREEN

PROJECT NO.
21-12032

DRAWING
A831

\\tetr-file1\Users\ryan.odom\Documents\12032-A-COS Tulare CTE_ryan.odomNLB27.rvt

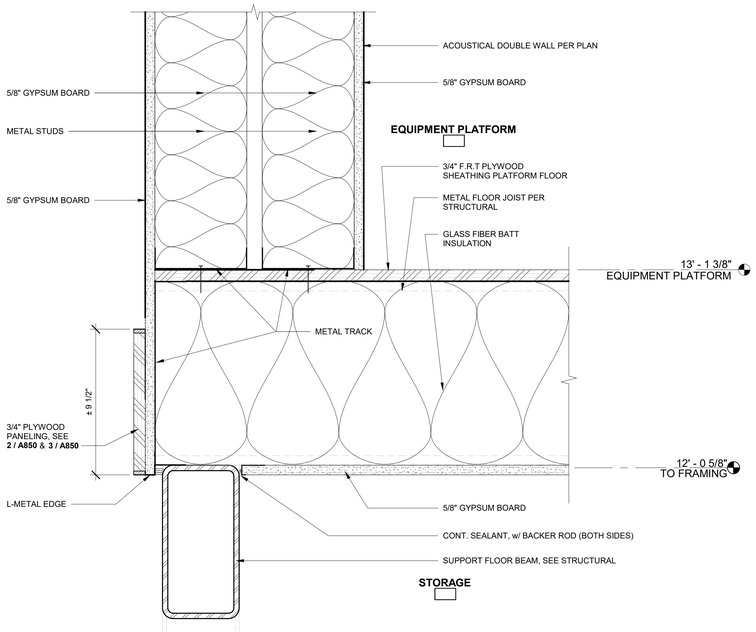

SUPPORT BEAM AND DOUBLE SOUND WALL
3" = 1'-0" | 22

NOTE:
CLIP TO LEDGER AT EA. END OF DOUBLE JOISTS (NOT SHOWN) SHOULD MATCH TYP. CEILING JOIST CLIP

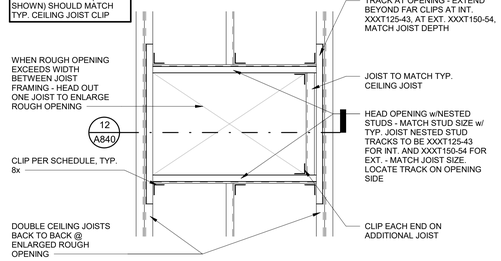

EXTERIOR CLIP SCHEDULE

MAX. SPAN	CLIP
9'-0"	LS543 w/(2) #10 SCREWS EA. LEG OR, L30 w/(2) #10 SCREWS EA. LEG
12'-0"	LS545 w/(2) #10 SCREWS EA. LEG OR, L50 w/(3) #10 SCREWS EA. LEG
15'-0"	LS545 w/(2) #10 SCREWS EA. LEG OR, L50 w/(3) #10 SCREWS EA. LEG

INTERIOR CLIP SCHEDULE

MAX. SPAN	CLIP
9'-0"	LS543 w/(2) #10 SCREWS EA. LEG OR, L30 w/(2) #10 SCREWS EA. LEG
12'-0"	LS545 w/(2) #10 SCREWS EA. LEG OR, L50 w/(3) #10 SCREWS EA. LEG

CEILING / WALL ACCESS PANELS
1" = 1'-0" | 11

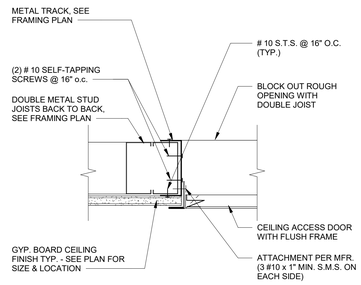

CLG./ WALL ACCESS DOOR EDGE
3" = 1'-0" | 17

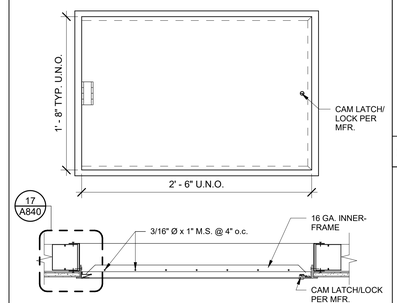

CEILING/WALL ACCESS DOOR
1 1/2" = 1'-0" | 12

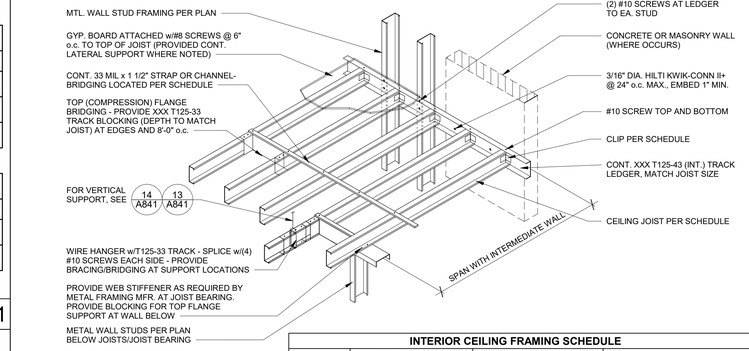

GENERAL NOTES:

1. DESIGNED FOR 12 psf DL (UP TO (2) LAYERS OF 5/8" GYP. BOARD) AND 10 psf LL.
2. IF SPAN OR LOADING CONDITION IS DIFFERENT THAN INDICATED, CONTACT ARCHITECT.
3. ILLUSTRATION IS FOR INFORMATION PURPOSES ONLY AND DOES NOT REFLECT A SPECIFIC LOCATION.

INTERIOR CEILING FRAMING SCHEDULE

MAX. SPAN	MIN. JOIST SIZE & SPACING	BRIDGING LOCATION	CONNECTION OF JOIST TO LEDGER
6'-0"	362S162-33 @ 16" o.c.	ONE ROW AT MID-SPAN	LS543 w/(2) #10 SCREWS EA. LEG OR, L30 w/(2) #10 SCREWS EA. LEG
9'-0"	362S200-43 @ 16" o.c.	ONE ROW AT MID-SPAN	LS543 w/(2) #10 SCREWS EA. LEG OR, L30 w/(2) #10 SCREWS EA. LEG
12'-0"	600S162-43 @ 16" o.c.	ONE ROW AT MID-SPAN	LS545 w/(2) #10 SCREWS EA. LEG OR, L50 w/(3) #10 SCREWS EA. LEG
15'-0"	600S200-54 @ 16" o.c.	TWO ROWS AT 1/3 POINTS	LS545 w/(2) #10 SCREWS EA. LEG OR, L50 w/(3) #10 SCREWS EA. LEG
20'-0"	600S300-68 @ 16" o.c.	TWO ROWS AT 1/3 POINTS	LS545 w/(2) #10 SCREWS EA. LEG OR, L50 w/(3) #10 SCREWS EA. LEG

CEILING FRAMING - INTERIOR (MTL.) (FOR MECH. PLATFORM FRAMING, SEE STRUCT.)
1/2" = 1'-0" | 2

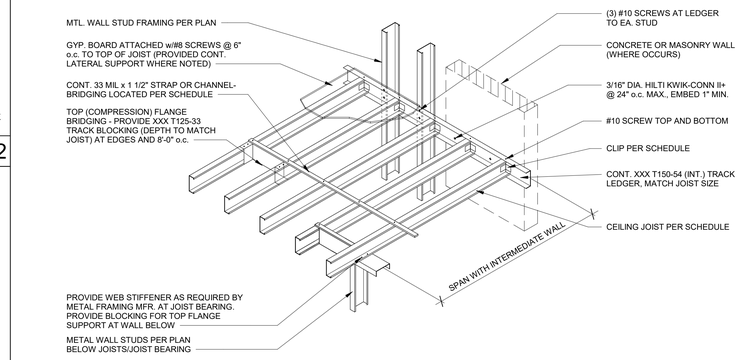

GENERAL NOTES:

1. DESIGNED FOR 12 psf DL (UP TO (2) LAYERS OF 5/8" GYP. BOARD) AND 10 psf LL.
2. IF SPAN OR LOADING CONDITION IS DIFFERENT THAN INDICATED, CONTACT ARCHITECT.
3. ILLUSTRATION IS FOR INFORMATION PURPOSES ONLY AND DOES NOT REFLECT A SPECIFIC LOCATION.

EXTERIOR CEILING FRAMING SCHEDULE

MAX. SPAN	MIN. JOIST SIZE & SPACING	BRIDGING LOCATION	CONNECTION OF JOIST TO LEDGER
6'-0"	600S162-33 @ 16" o.c.	ONE ROW AT MID-SPAN	LS545 w/(2) #10 SCREWS EA. LEG OR, L50 w/(2) #10 SCREWS EA. LEG
9'-0"	600S200-43 @ 16" o.c.	ONE ROW AT MID-SPAN	LS545 w/(2) #10 SCREWS EA. LEG OR, L50 w/(2) #10 SCREWS EA. LEG

CEILING FRAMING - EXTERIOR (MTL.)
1/2" = 1'-0" | 3

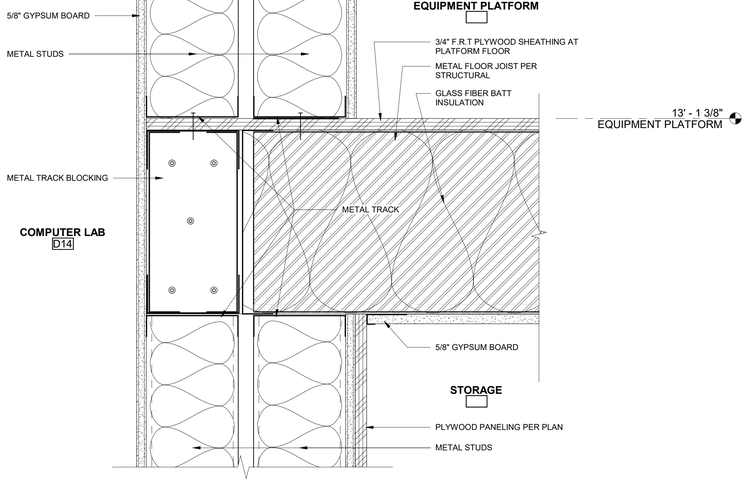

EQUIPMENT PLATFORM AT DOUBLE SOUND WALL
3" = 1'-0" | 24

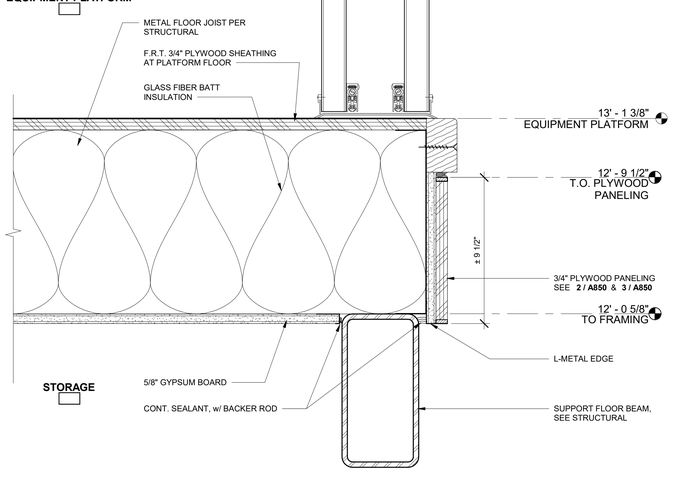

MAINT. ACCESS DOOR & FLOOR SUPPORT BEAM AT EQUIP. PLATFORM
3" = 1'-0" | 14

PLOT DATE: 11/1/2022, 10:07:25 PM

FOR BID ONLY

Teter, LLP expressly reserves its common law copyright and other property rights in these plans. This document, the ideas and designs incorporated herein, as an instrument of professional service, is not to be used in whole or in part, for any other project without prior written authorization.

MARK	DATE	DESCRIPTION
	11/1/2022	DSA RESUBMITTAL

TETER, LLP
ARCHITECTS ENGINEERS CONNECTED
FRESNO HEADQUARTERS
VISALIA | BAKERSFIELD | MODESTO | SAN LUIS OBISPO

TULARE CAMPUS CTE
COLLEGE OF THE SEQUOIAS
4999 E. BARDSLEY AVE.
TULARE, CA

DRAWING TITLE
TYPICAL CEILING DETAILS

PROJECT NO.
21-12032

DRAWING
A840

\\tet-file1\Users\ryan.odom\Documents\12032-A-COS Tulare CTE_ryan.odomNLB27.rvt

8" MAX. OR 1/4 THE LENGTH OF THE END RUNNER, WHICHEVER IS LEAST (ALL WALLS)

PROPRIETARY BERC 2 SEISMIC CLIP, SEE BELOW

12 GA. HANGER WIRE 4' o.c. MAX. ALONG MAIN RUNNERS AND AT ENDS OF ALL MAIN AND CROSS RUNNERS. HANGER WIRES SHALL HAVE 3 TIGHT TURNS IN 3" EA. END., TYP. FOR CONN. TO STRUCTURE - SEE 3 A841

FASTENER PER MFR.

CONT. WALL ANGLE, 15/16" LEG

FASTENER 24" o.c. MAX.

WALL

INTERSECTING CROSS RUNNER 24" o.c. MAX.

CONT. MAIN RUNNER 4' o.c. MAX.

UNATTACHED SIDE (SEE BELOW)

ATTACHED SIDE (SEE BELOW)

3/4" END OF RUNNER TO WALL ANGLE

PROPRIETARY SEISMIC END CLIP, ARMSTRONG BERC 2, CLIPPED TO WALL ANGLE AND FASTENED WITH (2) #8 SCREWS, ALLOW FOR 3/4 INCH MOVEMENT EXTENSION.

MAIN OR CROSS RUNNER

7/8"

1 1/8"

1/2" MIN.

LOOSE SCREW

NO. 7 BY 7/16" SMS THROUGH FIXED HOLE IN CLIP AND TOP FLANGE OF BULB RUNNER

CONT. WALL ANGLE, 15/16" LEG WITH (2) #8 W.S. AT 24" O.C. MAX. TO WALL FRAMING

WALL

UNATTACHED SIDE

ATTACHED SIDE

CEILING PERIMETER N.T.S. 27

(REF. DSA IR 25-2 DETAIL 2.35)

12 GA VERTICAL HANGERS AT 4'-0" O.C. EACH WAY AT MAIN RUNNER WITH MINIMUM 3-TIGHT TURNS IN 3" AT BOTH ENDS, SEE 3 A841

12 GA. BRACING WIRE W/MIN. 4-TIGHT TURNS IN 3" BOTH ENDS OF WIRE CONNECTED TO MAIN RUNNERS 90° APART, (4)-TOTAL AT EACH STRUT (U.N.O.) SEE 3 A841

RIGID VERT. STRUT SEE 5 A841

2'-0" TYP.

2'-0" TYP.

6 MIN

4'-0"

0° TO 45° (NOTE 2)

FOR LOCATION OF BRACING WIRES AND STRUT, SEE 5 A841

MAIN RUNNER

CROSS RUNNER

NOTES:

1. STRUTS SHALL NOT REPLACE HANGER WIRES.
2. THE MINIMUM ACCEPTABLE ANGLE IS DETERMINED SUCH THAT THE WIRES DO NOT INTERFERE WITH THE RUNNERS, LIGHT FIXTURES, ETC. AND REMAIN STRAIGHT AND UNOBSTRUCTED.
3. FOR LIGHT STRUCTURE AIR TERMINAL SUPPORT, SEE 18 A841
4. FOR TYPICAL CEILING WIRE SPLICES, SEE 4 A841

SUSPENDED CEILING - SUSPENSION & BRACING ASSEMBLY 3" = 1'-0" 17

(REF. DSA IR 25-2 DETAIL 2.12)

6' - 0" MAX

12' - 0" MAX

6' - 0" MAX

6' - 0" MAX

12' - 0" MAX

6' - 0" MAX

27 A841 ATTACHED JOINT

ATTACHED SIDE

17 A841 Typical

27 A841 ATTACHED SIDE

144 SQ FT MAX

CROSS RUNNERS TYP.

MAIN RUNNERS

BRACING WIRE LOCATION-TYP.

PROPRIETARY SEISMIC END CLIP, ARMSTRONG BERC2

27 A841 UNATTACHED SIDE

27 A841 UNATTACHED SIDE

UNATTACHED SIDE

CONT ANGLE @ PERIMETER

NOTE:

BRACING WIRES AND COMP. STRUT SHALL OCCUR AT EVERY 144 SQ. FT. MAX. IN ROOMS OVER 144 SQ. FT.

TYPICAL SUSPENDED CEILING INSTALLATION N.T.S. 2

TYPICAL SUSPENDED CEILING NOTES

CEILING SYSTEM NOTES FROM DSA IR 25-2, APPENDIX 'A,' NOTES 1.01 - 8.01

1. **-CEILING SYSTEM GENERAL**
1.01 -CEILING SYSTEM COMPONENTS SHALL COMPLY WITH ASTM C 635-07 AND SECTION 5.1 OF ASTM E 580-10A.
1.02 -THE CEILING GRID SYSTEM MUST BE RATED HEAVY DUTY AS DEFINED BY ASTM C 635-08.
1.03 -SUSPENSION COMPONENTS:
& ARMSTRONG WORLD INDUSTRIES INC.; PRELUDE XL, ESR 1308.
1.04 MAIN RUNNER: NO. 7301
CROSS RUNNERS: NO. XL7341 (4'), XL7328 (2')
PERIMETER SEISMIC CLIPS: NO. BERC2
WALL ANGLE: 15/16" LEGS
1.05 -CEILING PANELS SHALL NOT SUPPORT ANY LIGHT FIXTURES, AIR TERMINALS, OR DEVICES.
1.06 -FOR CEILING INSTALLATIONS UTILIZING ACOUSTIC PANELS OF MINERAL OR GLASS FIBER, IT IS NOT MANDATORY TO PROVIDE 3/4 INCH CLEARANCE BETWEEN THE ACOUSTICAL PANEL AND THE WALL ON THE SIDES OF THE CEILING WHICH ARE FREE TO SLIP. FOR ALL OTHER CEILING PANEL TYPES, PROVIDE 3/4 INCH CLEARANCE BETWEEN THE CEILING PANEL AND THE WALL ON THE SIDES OF THE CEILING FREE TO SLIP.

2. **-MATERIALS**
2.01 -CEILING WIRE SHALL BE CLASS 1 ZINC COATED (GALVANIZED) CARBON STEEL CONFORMING TO ASTM A 641-09A. WIRE SHALL BE 12 GAUGE (0.106 INCH DIAMETER) WITH SOFT TEMPER AND MINIMUM TENSILE STRENGTH OF 70 KSI.
2.02 GALVANIZED SHEET STEEL (INCLUDING THAT USED FOR METAL STUD AND TRACK COMPRESSION STRUTS/POST) SHALL CONFORM TO ASTM A653, OR OTHER EQUIVALENT SHEET STEEL LISTED IN SECTION A3.1 OF THE NORTH AMERICAN SPECIFICATION FOR THE DESIGN OF COLD-FORMED STEEL STRUCTURAL MEMBERS, (AISI S100). MATERIAL 43 MIL (18 GAUGE) AND LIGHTER SHALL HAVE MINIMUM YIELD STRENGTH OF 33 KSI. MATERIAL 54 MIL (16 GAUGE) AND HEAVIER SHALL HAVE A MINIMUM YIELD STRENGTH OF 50KSI.
2.03 -ELECTRICAL METALLIC TUBING (EMT) SHALL BE ANSI C80.3/UL 797 CARBON STEEL WITH G90 GALVANIZING. EMT SHALL HAVE A MINIMUM YIELD STRENGTH (FY) OF 30 KSI AND MINIMUM ULTIMATE STRENGTH (FU) OF 48 KSI.

3. **-ATTACHMENT OF HANGER AND BRACING WIRES**
3.01 -SEPARATE ALL CEILING HANGER AND BRACING WIRES AT LEAST 6 INCHES FROM ALL UNBRACED DUCTS, PIPES, CONDUITS, AND SIMILAR ITEMS.
3.02 -HANGER AND BRACING WIRES SHALL NOT ATTACH TO OR BEND AROUND OBSTRUCTIONS INCLUDING BUT NOT LIMITED TO PIPING, DUCTWORK, CONDUIT, AND EQUIPMENT.
3.03 -HANGER WIRES THAT ARE MORE THAN ONE HORIZONTAL IN 6 VERTICAL OUT OF PLUMB SHALL HAVE COUNTER SLOPING WIRES.
3.04 -SLACK SAFETY WIRES SHALL BE CONSIDERED HANGER WIRES FOR INSTALLATION AND TESTING REQUIREMENTS.
3.05 -HANGER AND BRACE WIRE ANCHORAGE TO THE STRUCTURE SHALL BE INSTALLED IN SUCH A MANNER THAT THE DIRECTION OF THE ANCHOR ALIGNS CLOSELY WITH THE DIRECTION OF THE WIRE. (E.G. BRACING WIRE CEILING CLIPS MUST BE BENT AS SHOWN IN THE DETAILS AND ROTATED AS REQUIRED TO ALIGN CLOSELY WITH THE DIRECTION OF THE WIRE. EYE SCREWS IN WOOD MUST BE INSTALLED SO THEY ALIGN CLOSELY WITH THE DIRECTION OF THE WIRE, ETC.).

4. **-FASTENERS AND WELDING**
4.01 -SHEET METAL SCREWS SHALL COMPLY WITH ASTM C 1513-10, ASME B 18.6.4-89 (R 2005). PENETRATION OF SCREWS THROUGH JOINED MATERIAL SHALL NOT BE LESS THAN THREE EXPOSED THREADS.
4.02 -EXPANSION ANCHORS SHALL BE (NONE REQUIRED FOR PROJECT CONDITIONS).
4.03 -POWER ACTUATED FASTENERS SHALL BE (NONE REQUIRED FOR PROJECT CONDITIONS).
4.04 -IF NOT OTHERWISE SPECIFIED IN THE EVALUATION REPORT, POWER ACTUATED FASTENERS INSTALLED IN STEEL SHALL BE INSTALLED SO THE ENTIRE POINTED END OF THE FASTENER IS DRIVEN THROUGH THE STEEL MEMBER.
4.05 -POWER ACTUATED FASTENERS IN CONCRETE ARE NOT PERMITTED FOR BRACING WIRES.
4.06 -CONCRETE REINFORCEMENT AND PRESTRESSING TENDONS SHALL BE LOCATED BY NON-DESTRUCTIVE MEANS PRIOR TO INSTALLING POST-INSTALLED ANCHORS.
4.07 -WELDING SHALL BE IN ACCORDANCE WITH AWS D1.3 USING E60XX SERIES ELECTRODES.

5. **-TESTING**
5.01 -ALL FIELD TESTING MUST BE PERFORMED IN THE PRESENCE OF THE PROJECT INSPECTOR.
5.02 -POST-INSTALLED ANCHORS IN CONCRETE USED TO SUPPORT HANGER WIRES SHALL BE TESTED AT A FREQUENCY OF 10 PERCENT. POWER-ACTUATED FASTENERS IN CONCRETE SHALL BE FIELD TESTED FOR 200 POUNDS IN TENSION. ALL OTHER POST-INSTALLED ANCHORS IN CONCRETE SHALL BE TESTED IN ACCORDANCE WITH CBC SECTION 1910A.5.
5.03 -POST-INSTALLED ANCHORS IN CONCRETE USED TO ATTACH BRACING WIRES SHALL BE TESTED AT A FREQUENCY OF 50 PERCENT IN ACCORDANCE WITH CBC SECTION 1910A.5.

6. **-LIGHT FIXTURES**
6.01 -ALL LIGHT FIXTURES SHALL BE POSITIVELY ATTACHED TO THE CEILING SUSPENSION SYSTEM BY MECHANICAL MEANS TO RESIST A HORIZONTAL FORCE EQUAL THE WEIGHT OF THE FIXTURE. A MINIMUM OF TWO SCREWS OR APPROVED FASTENERS ARE REQUIRED AT EACH LIGHT FIXTURE PER ASTM E 580, SECTION 5.3.1.
6.02 -SURFACE MOUNTED FIXTURES SHALL BE ATTACHED TO THE MAIN RUNNER WITH AT LEAST 2 POSITIVE CLAMPING DEVICES. THE CLAMPING DEVICE SHALL COMPLETELY SURROUND THE SUPPORTING CEILING RUNNER AND BE MADE OF 14 GAUGE MINIMUM THICKNESS SHEET STEEL, ROTATIONAL SPRING CATCHES DO NOT COMPLY. A 12 GAUGE SLACK SAFETY WIRE SHALL BE CONNECTED FROM EACH CLAMPING DEVICE TO THE STRUCTURE ABOVE. PROVIDE ADDITIONAL SUPPORTS WHEN LIGHT FIXTURES ARE 8 FEET OR LONGER, OR EXCEED 56 LBS. MAXIMUM SPACING BETWEEN SUPPORTS SHALL NOT EXCEED 8 FEET.
6.03 -LIGHT FIXTURES WEIGHING LESS THAN OR EQUAL TO 10 LBS SHALL HAVE A MINIMUM OF ONE 12 GAUGE SLACK SAFETY WIRE CONNECTED TO THE FIXTURE HOSING AND THE STRUCTURE ABOVE.
6.04 -LIGHT FIXTURES WEIGHING LESS THAN OR EQUAL TO 10 LBS SHALL HAVE A MINIMUM OF ONE 12 GAUGE SLACK SAFETY WIRE CONNECTED TO THE FIXTURE HOSING AND THE STRUCTURE ABOVE. (REPEAT OF NOTE 6.03)
6.05 -LIGHT FIXTURES WEIGHING GREATER THAN 10 LBS, BUT LESS THAN OR EQUAL TO 56 LBS, MAY BE SUPPORTED DIRECTLY ON THE CEILING GRID MEMBERS, BUT THEY SHALL HAVE A MINIMUM OF TWO (2) 12 GAUGE SLACK SAFETY WIRES CONNECTED FROM THE FIXTURE HOUSING AT DIAGONAL CORNERS TO THE STRUCTURE ABOVE.
EXCEPTION: ALL LIGHT FIXTURES GREATER THAN 2 BY 4 FT WEIGHING LESS THAN 56 LBS SHALL HAVE A 12 GAUGE SLACK SAFETY WIRE AT EACH CORNER.
6.06 -LIGHT FIXTURES WEIGHING GREATER THAN 56 LBS SHALL BE INDEPENDENTLY SUPPORTED BY NOT LESS THAN 4 TAUT 12 GAUGE WIRES (ONE AT EACH CORNER) ATTACHED FROM THE FIXTURE HOUSING TO THE STRUCTURE ABOVE OR OTHER APPROVED HANGERS. THE 4 TAUT 12 GAUGE WIRES OR OTHER APPROVED HANGERS, INCLUDING THEIR ATTACHMENT TO THE STRUCTURE ABOVE, SHALL BE CAPABLE OF SUPPORTING 4 TIMES THE WEIGHT OF THE FIXTURE.

7. **-SERVICES WITHIN THE CEILING**
7.01 -ALL FLEXIBLE SPRINKLER HOSE FITTING MOUNTING BRACKETS, CEILING MOUNTED AIR TERMINALS, OR OTHER SERVICES, SHALL BE POSITIVELY ATTACHED TO THE CEILING SUSPENSION SYSTEM BY MECHANICAL MEANS. SCREWS OR APPROVED FASTENERS ARE REQUIRED. A MINIMUM OF 2 ATTACHMENT POINTS ARE REQUIRED AT EACH COMPONENT.
7.02 -CEILING MOUNTED AIR TERMINALS OR OTHER SERVICES WEIGHING LESS THAN OR EQUAL TO 20 LB SHALL HAVE ONE SLACK SAFETY WIRE ATTACHED FROM THE TERMINAL OR SERVICE TO THE STRUCTURE ABOVE.
7.03 -FLEXIBLE SPRINKLER HOSE FITTINGS, CEILING MOUNTED AIR TERMINALS OR OTHER SERVICES WEIGHING MORE THAN 20 LBS, BUT LESS THAN OR EQUAL TO 56 LBS, SHALL HAVE A MINIMUM OF TWO (2) #12 GAUGE SLACK SAFETY WIRES (AT DIAGONAL CORNERS) CONNECTED FROM TERMINAL OR SERVICE TO THE STRUCTURE ABOVE.
7.04 -FLEXIBLE SPRINKLER HOSE FITTINGS, CEILING MOUNTED AIR TERMINALS, OR OTHER SERVICES WEIGHING MORE THAN 56 LBS SHALL BE SUPPORTED DIRECTLY FROM THE STRUCTURE ABOVE BY NOT LESS THAN 4 TAUT 12 GAUGE HANGER WIRES ATTACHED FROM THE TERMINAL OR SERVICE TO THE STRUCTURE ABOVE OR OTHER APPROVED HANGERS.

8. **-OTHER DEVICES WITHIN THE CEILING**
8.01 -ALL LIGHTWEIGHT MISCELLANEOUS DEVICES, SUCH AS STROBE LIGHTS, OCCUPANCY SENSORS, SPEAKERS, EXIT SIGNS, ETC., SHALL BE ATTACHED TO THE CEILING GRID. IN ADDITION, DEVICES WEIGHING MORE THAN 10 LBS SHALL HAVE A 12 GAUGE SLACK SAFETY WIRE ANCHORED TO THE STRUCTURE ABOVE. DEVICES WEIGHING MORE THAN 20 LBS SHALL BE SUPPORTED INDEPENDENTLY FROM THE STRUCTURE ABOVE.

CEILING PERIMETER N.T.S. 27

FACE OF WALL, TYP.

8' - 0"

TYP. HANGER WIRE @ 4' O.C. AT MAIN RUNNER, SEE 17 A841

CROSS RUNNER @ 2' O.C., TYP.

PERIMETER EDGE TRIM, CONTINUOUS AROUND PERIMETER

14'-0"

15' - 0"

MAIN RUNNER @ 2' O.C., TYP.

24 A841

COMPRESSION STRUT-WIRE BRACING, SEE 5 A841

SUSP. FREE FLOATING CLG. - F29 - MEETING 1/4" = 1'-0" 23

(REF. DSA IR 25-2 DETAIL 2.80)

(2) 12 GA. SLACK SAFETY WIRE HANGERS FOR DEVICES THAT WEIGH LESS THAN 56 LBS PLACE ON DIAGONAL CORNERS.

EXCEPTION: FIXTURES GREATER THAN 2 FEET X 4 FEET WEIGHING LESS THAN 56 LBS. REQUIRE A 12 GA. SLACK SAFETY WIRE HANGER AT EA. CORNER.

1-#8 S.M.S. IN OPPOSITE SIDES (2 TOTAL) LOCATE SCREWS NEAR THE CENTER OF TERMINAL OR FIXTURE

AIR TERMINAL OR LIGHT FIXTURE (56# MAX.)

HEAVY DUTY GRID SYSTEM

LIGHT FIXTURE / AIR TERMINAL SUPPORT DETAIL

SUSP. ACOUSTICAL CLG. LIGHT N.T.S. 18

METAL DECK, 20 GA. MIN

(2) #8x1/2" SELF-TAPPING SCREW THRU CLIP TO DECK

(2) #8x1/2" SELF-TAPPING SCREW THRU CEILING CLIP, STEEL STRAP 3" WIDE x 4" LONG x 12 GA., TO DECK

CEILING CLIP, STEEL STRAP 3" WIDE x 4" LONG x 12 GA., BEND TO ALIGN w/WIRE

BRACE WIRE w/(4) TIGHT TURNS IN 3"

HANGER WIRE w/(3) TIGHT TURNS IN 3"

BRACE WIRE

HANGER WIRE

(REF. DSA IR 25-2 DETAIL 4.30)

CEILING SUPPORT (MTL. DECK) 1 1/2" = 1'-0" 13

(REF. DSA IR 25-2 DETAIL 4.10)

1/2" MAX. U.O.N.

FOR CONNECTION TO STRUCTURE SEE 13 A841 14 A841

1/2" TYP.

3" MAX.

3 TURNS @ HANGER WIRE TYPICAL @ EACH END

#12 GAGE WIRE

HANGER WIRE

1/2" MAX. U.O.N.

FOR CONNECTION TO STRUCTURE SEE 13 A841 14 A841

1/2" TYP.

1 1/2" MAX.

4 TURNS @ BRACE WIRES TYP. @ EACH END

10° TO 45°

#12 GAGE WIRE

BRACING WIRE

HANGER AND BRACING WIRE CONNECTION - TYP. WIRE N.T.S. 3

EDGE TRIM

SPLICE PLATE W/ (2) SCREWS EACH SIDE OF JOINT, (2) SPLICE PLATES AT EACH VERTICAL JOINT

EDGE TRIM SPLICE N.T.S. 29

WIRE HANGER, SEE 3 / A841

EDGE TRIM, PER MFR

HORIZONTAL SPLICE PLATE AT ALL VERTICAL JOINTS, SEE 29 / A841

TRIM ATTACHMENT CLIP

ACOUSTIC CEILING TILE

MAIN OR CROSS TEE

FREE FLOATING CEILING - EDGE TRIM 3" = 1'-0" 24

ROOF BEAM, WHERE OCCURS

ROOF DECK

SEE STRUCTURAL SHEET S008 FOR CONNECTION TO DECK/BEAM

1/16" AIRCRAFT CABLE HANGER, W/ CARABINER AT BAFFLE AND CABLE LOCK AT DECK/BEAM CONNECTION

2x4 ACOUSTIC BAFFLE, 2" THICK

VARIES

20'-0" TYP. U.N.O.

ACOUSTIC BAFFLE 1/2" = 1'-0" 19

STRUCTURAL BEAMS ONLY

CEILING CLIP 3" WIDE X 4" LEG X 12 GA.

HILTI X-EDNI 16S12 POWER PINS (0.145" X5/8" w/ 1/2" STL. WASHER)

CEILING CLIP 3" WIDE X 4" LEG X 12 GA.

1/2" MAX.

1/2" MAX.

HANGER WIRE (TEST FOR 200 LBS.) - 3 TIGHT TURNS IN 3" EACH END.

BRACING WIRE (TEST FOR 440 LBS.) - 4 TIGHT TURNS IN 3" EACH END.

BRACE WIRE

HANGER WIRE

(REF. DSA IR 25-2 DETAIL 4.33)

(REF. DSA IR 25-2 DETAIL 4.23)

PROVIDE FIELD TESTS PER IR-25-2

CEILING SUPPORT (BEAM) 1 1/2" = 1'-0" 14

(REF. DSA IR 25-2 DETAIL 6.10)

HANGER WIRE

3 TURNS IN 3" TYPICAL @ EACH END

HANGER WIRE ONLY

BRACE OR HANGER WIRE

4 TURNS IN 1-1/2" TYPICAL @ EACH END

HANGER OR BRACE WIRE

NOTES:

WIRE SPLICES ARE SHOWN LOOSELY TIED FOR ILLUSTRATIVE PURPOSES ONLY AND SHALL BE DRAWN TIGHT TO COMPLETE INSTALLATION WHEN CONSTRUCTED.

CEILING WIRE SPLICES 3" = 1'-0" 4

(REF. DSA IR 25-2.13 DETAIL 5.40)

(2) POWDER ACTUATED FASTENERS (NEED SIZE, .145" DIA. MIN.

CUT FLANGES AND BEND

STRUT CONNECTION TO STRUCTURAL STEEL

(REF. DSA IR 25-2.13 DETAIL 5.20 & 3.21)

INSULATION OVER METAL DECK

#12 S.M.S

METAL DECK (20 GA. MIN.)

(2) #12 S.M.S.

(2) #10 S.M.S

3/4" MIN.

L 2" x 2" x 12 GA. x 8"

(2) #10 S.M.S

L 2" x 2" x 12 GA.

OPTION 1

OPTION 2

STRUT CONNECTION TO METAL DECK

CHANNEL COMPRESSION STRUT	MAXIMUM LENGTH
250S125-33	5' - 0"
250S137-33	6' - 10"
362S137-33	8' - 0"
250S137-43	8' - 10"
400S137-43	10' - 10"

CHANNEL STRUT TABLE

COMPRESSION STRUT TO STRUCTURE CONNECTIONS N.T.S. 15

COPE FLANGE OR FLATTEN TO ALLOW INSTALLATION OF ACOUSTICAL TILE

HANGER WIRE BEYOND

BRACE WIRE BEYOND

CROSS RUNNER

MAIN RUNNER

A SECTION 3" = 1'-0"

CHANNEL TYP STRUT

(REF. DSA IR 25-2 DETAIL 3.10)

NOT TO EXCEED THE ALLOWABLE LENGTH OF WIRE IN TABLE 15 / A841 FOR THE COMPRESSION STRUT SELECTED

FOR CONNECTION TO STRUCTURE SEE 15 / A841

STRUCTURE

CHANNEL TYPE COMPRESSION STRUT PER TABLE ON 15 / A841 CENTERED OVER CROSS RUNNER

4'-0" OC MAX

BRACE WIRES SEE 3 A841

HANGER WIRE

3 TIGHT TURNS IN 3" FOR HANGER TYP.

1 1/2" MAX

3/4" MIN TYP

1" MAX

0° TO 45° TYP

3/4" MIN. EDGE DISTANCE,TYP.

(2) 1/4"DIA. MACHINE BOLT

CROSS RUNNER

4 TIGHT TURNS IN 1 1/2" TYP. FOR BRACE WIRE

MAIN RUNNER

SUSPENDED ACOUSTICAL CEILING COMPRESSION STRUT N.T.S. 5

PLOT DATE: 11/1/2022 10:07:30 PM

FOR BID ONLY

Teter, LLP expressly reserves its common law copyright and other property rights in these plans. This document, the ideas and designs incorporated herein, as an instrument of professional service, is not to be used in whole or in part, for any other project without prior written authorization.

MARK	DATE	DESCRIPTION
	11/1/2022	DSA RESUBMITTAL

LICENSED ARCHITECT JOSEPH COUTER 26243 STATE OF CALIFORNIA

TETER, LLP
FRESNO HEADQUARTERS
VISALIA | BAKERSFIELD | MODESTO | SAN LUIS OBISPO
ARCHITECTS ENGINEERS CONNECTED

TULARE CAMPUS CTE
COLLEGE OF THE SEQUOIAS
4999 E. BARDSLEY AVE.
TULARE, CA

DRAWING TITLE
TYPICAL SUSPENDED CEILING DETAILS

PROJECT NO.
21-12032

DRAWING
A841

\\tetr-file1\Users\ryan.odom\Documents\12032-A-COS Tulare CTE_ryan.odomNLB27.rvt

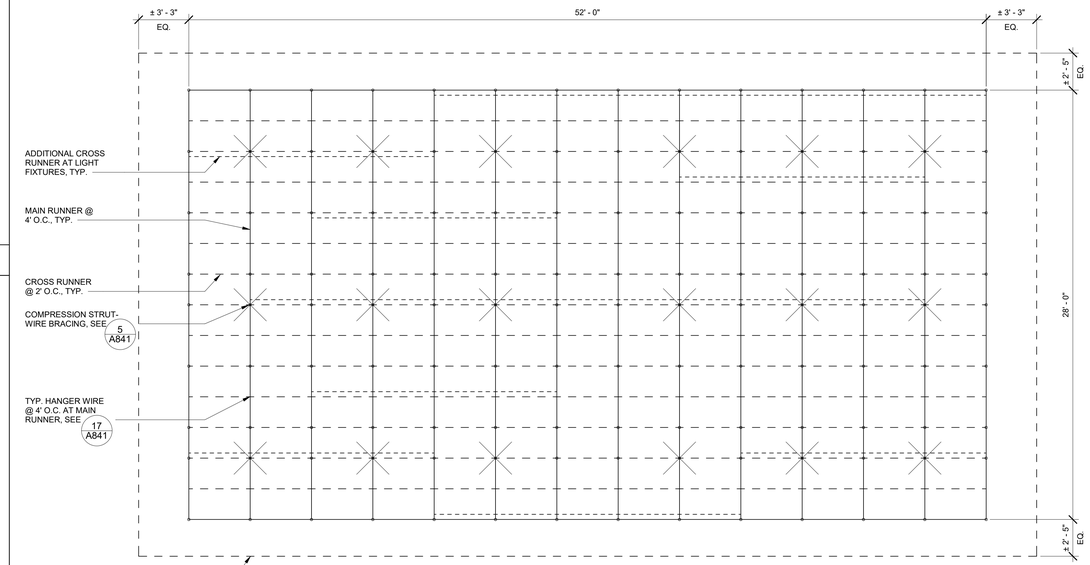

SUSPENDED FREE FLOATING CEILING - E1 - INDUSTRIAL AUTOMATION TECHNOLOGY 1/4" = 1'-0" | 14

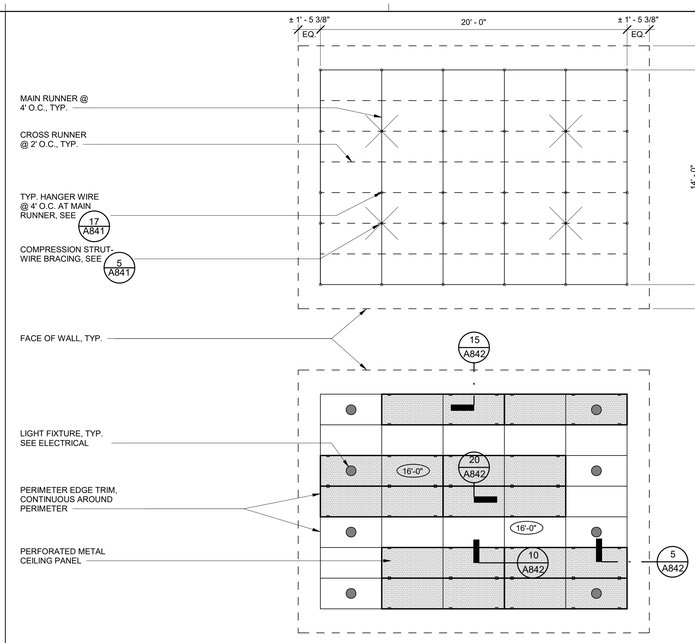

SUSPENDED FREE FLOATING CEILING - D6 - DISPLAY SPACE 1/4" = 1'-0" | 2

SUSPENDED FREE FLOATING CLG. - E4 - INDUSTRIAL AUTOMATION ROBOTICS 1/4" = 1'-0" | 4

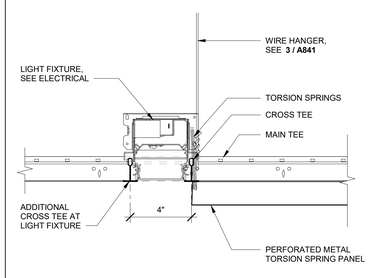

METAL CEILING PANEL - SLOT LIGHT FIXTURE 3" = 1'-0" | 25

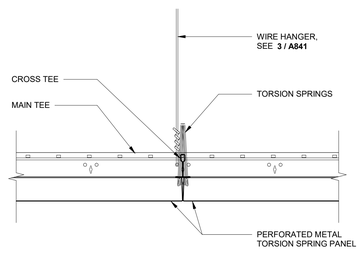

METAL CEILING PANEL - CROSS TEE 3" = 1'-0" | 20

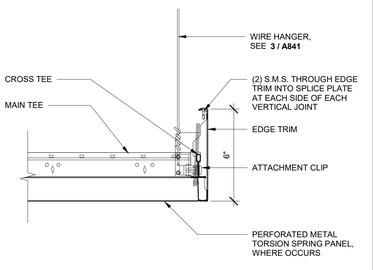

METAL CEILING PANEL - TRIM @ CROSS TEE 3" = 1'-0" | 15

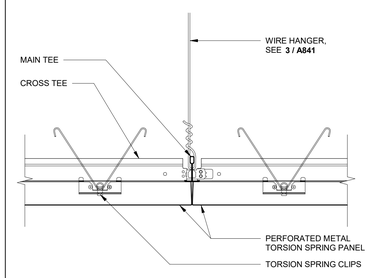

METAL CEILING PANEL - MAIN TEE 3" = 1'-0" | 10

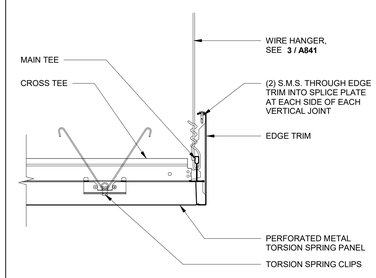

METAL CEILING PANEL - TRIM @ MAIN TEE 3" = 1'-0" | 5

FOR BID ONLY

Teter, LLP expressly reserves its common law copyright and other property rights in these plans. This document, the ideas and designs incorporated herein, as an instrument of professional service, is not to be used in whole or part, for any other project without prior written authorization.

MARK	DATE	DESCRIPTION
	11/1/2022	DSA RESUBMITTAL

TETER, LLP
ARCHITECTS ENGINEERS CONNECTED
FRESNO HEADQUARTERS
VISALIA | BAKERSFIELD | MODESTO | SAN LUIS OBISPO

TULARE CAMPUS CTE
COLLEGE OF THE SEQUOIAS
4999 E. BARDSLEY AVE.
TULARE, CA

DRAWING TITLE
SUSPENDED FREE FLOATING CEILING DETAILS

PROJECT NO.
21-12032

DRAWING
A842

PLOT DATE: 11/1/2022 10:07:34 PM

\\tetr-file1\Users\ryan.odom\Documents\12032-A-COS Tulare CTE_ryan.odomNLB27.rvt

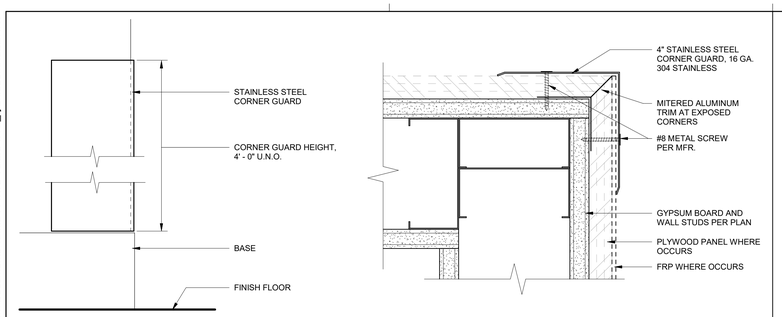

CORNER GUARD, TYP. — 6" = 1'-0" | 21

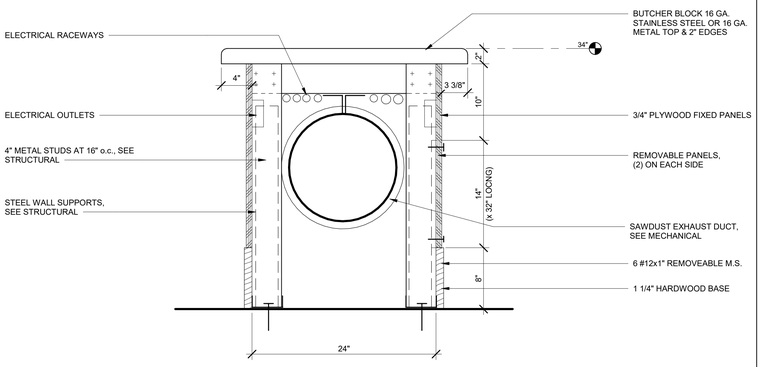

DUST COLLECTION SYSTEM CHASE — 1 1/2" = 1'-0" | 22

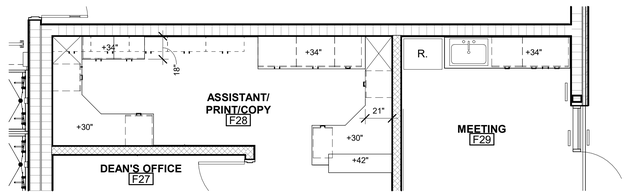

ENLARGED CASEWORK PLAN — 1/4" = 1'-0" | 23

SHEET METAL CLOSURE — 3" = 1'-0" | 29

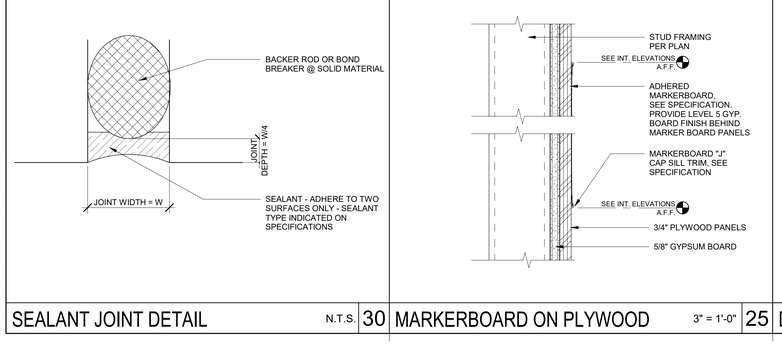

SEALANT JOINT DETAIL — N.T.S. | 30

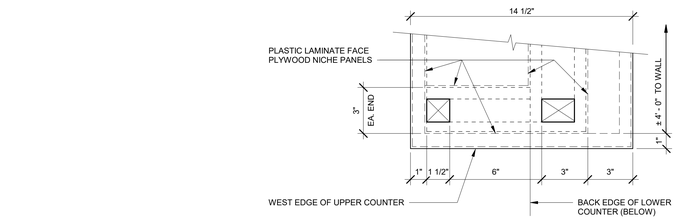

'**A**' UPPER COUNTER PLAN AT EDGE

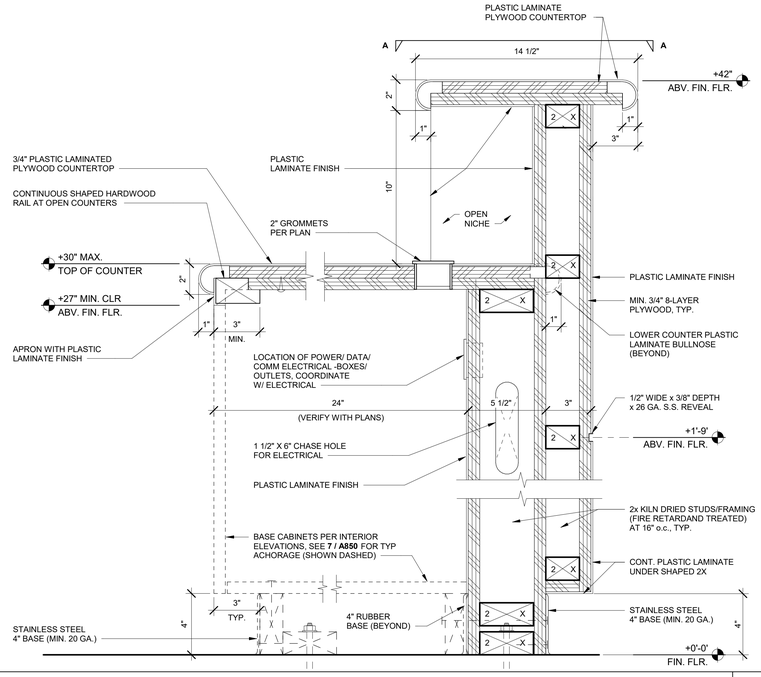

RECEPTION DESK COUNTER & TYP. BASE CABINET — 3" = 1'-0" | 13

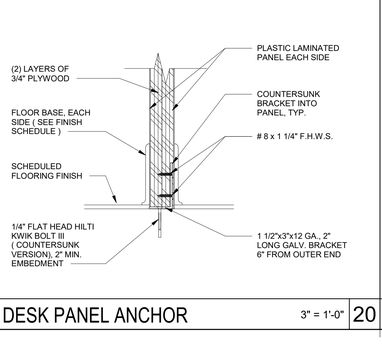

RECEPTION COUNTERTOP EDGE — 3" = 1'-0" | 19

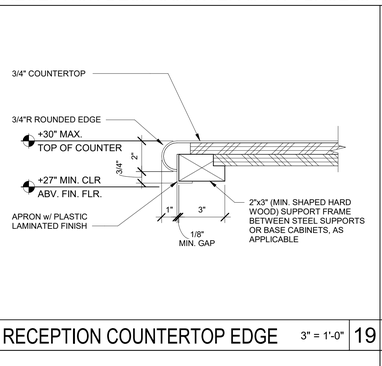

MARKERBOARD ON GYPSUM BOARD — 3" = 1'-0" | 24

MARKERBOARD ON PLYWOOD — 3" = 1'-0" | 25

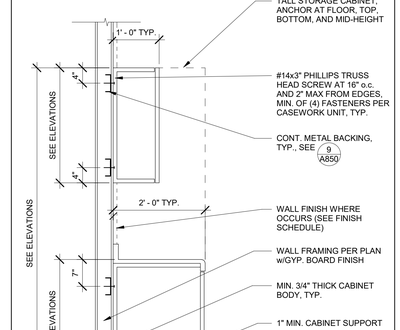

CABINET ANCHORAGE — 3/4" = 1'-0" | 7

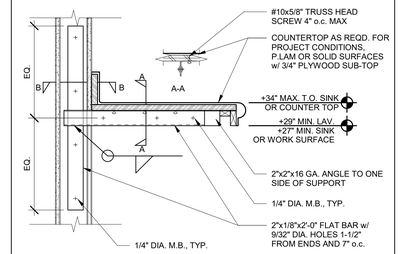

COUNTERTOP ANCHOR — 1 1/2" = 1'-0" | 8

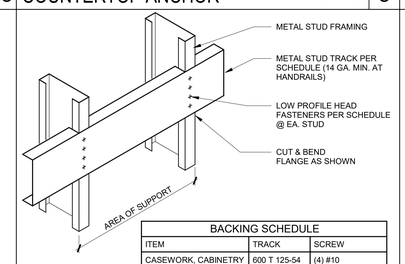

BACKING SCHEDULE		
ITEM	TRACK	SCREW
CASEWORK, CABINETRY	600 T 125-54	(4) #10
TOILET ACCESSORIES	362 T 125-54	(2) #10
GRAB BAR	600 T 125-68	(4) #10
MISC. FRAMING	ONE SIZE LARGER	(4) #10

METAL BACKING (TYP.) — 1 1/2" = 1'-0" | 9

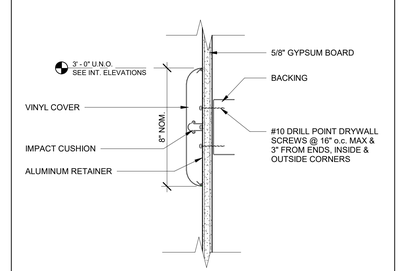

CHAIR RAIL — 3" = 1'-0" | 10

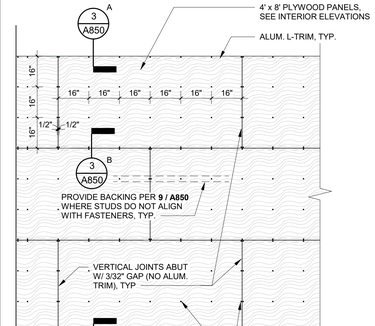

PLYWOOD PANELING FASTENER PLAN — 3/8" = 1'-0" | 2

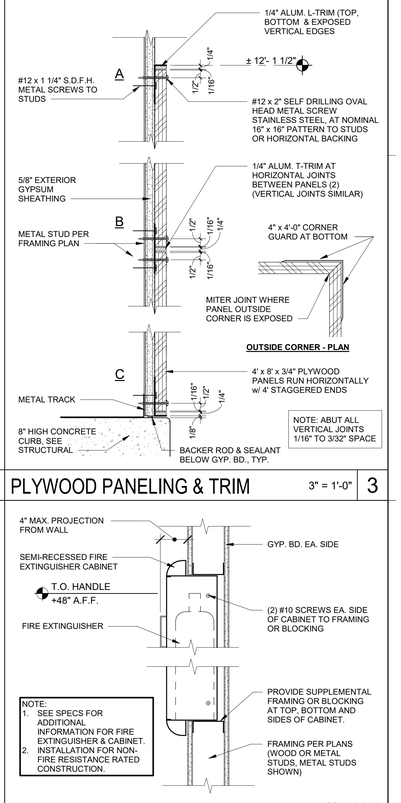

PLYWOOD PANELING & TRIM — 3" = 1'-0" | 3

FIRE EXTINGUISHER CABINET — 1 1/2" = 1'-0" | 4

FOR BID ONLY

Teter, LLP expressly reserves its common law copyright and other property rights in these plans. This document, the ideas and designs incorporated herein, as an instrument of professional service, is not to be used in whole or in part, for any other project without prior written authorization.

MARK	DATE	DESCRIPTION
	11/1/2022	DSA RESUBMITTAL

TETER, LLP
ARCHITECTS ENGINEERS
FRESNO HEADQUARTERS
VISALIA | BAKERSFIELD | MODESTO | SAN LUIS OBISPO
TETER

TULARE CAMPUS CTE
COLLEGE OF THE SEQUOIAS
4999 E. BARDSLEY AVE.
TULARE, CA

DRAWING TITLE
TYPICAL INTERIOR DETAILS

PROJECT NO.
21-12032

DRAWING
A850

PLOT DATE: 11/1/2022 10:07:43 PM

\\tetr-file1\Users\ryan.odom\Documents\12032-A-COS Tulare CTE_ryan.odomNLB27.rvt

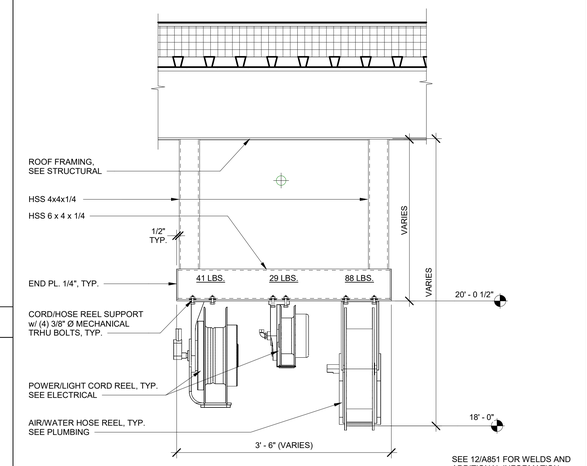

SEE 12/A851 FOR WELDS AND ADDITIONAL INFORMATION

CORD REEL SUPPORT 1" = 1'-0" 17

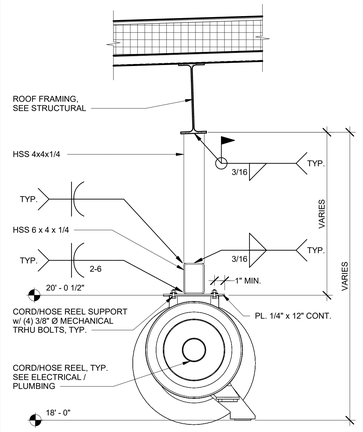

CORD REEL SUPPORT TYP. SECTION 1" = 1'-0" 12

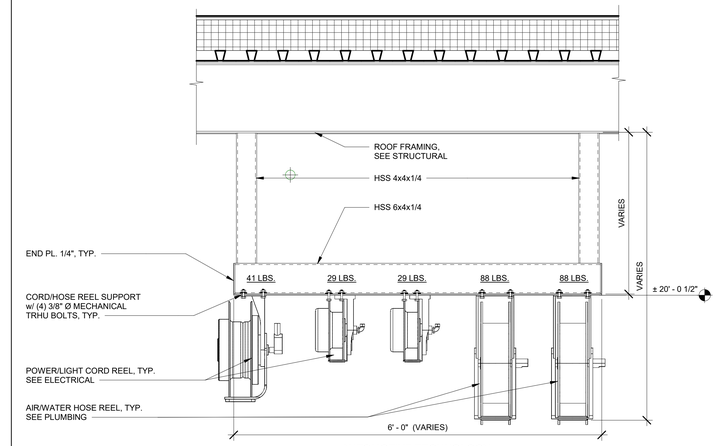

AUTOMOTIVE TECHNOLOGY
D8

SEE 12/A851 FOR WELDS AND ADDITIONAL INFORMATION

CORD REEL SUPPORT (AUTOMOTIVE TECHNOLOGY - D8) 1" = 1'-0" 2

INDUSTRIAL AUTOMATION TECHNOLOGY
E1

SEE 12/A851 FOR WELDS AND ADDITIONAL INFORMATION

CORD REEL 2 1" = 1'-0" 19

INDUSTRIAL AUTOMATION TECHNOLOGY
E1

SEE 12/A851 FOR WELDS AND ADDITIONAL INFORMATION

CORD REEL SUPPORT (INDUSTRIAL AUTOMATION TECHNOLOGY - E1) 1" = 1'-0" 4

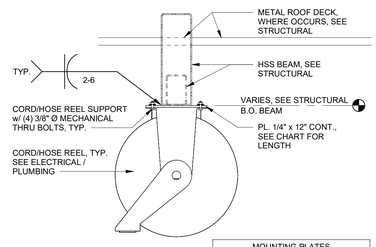

MOUNTING PLATES	
# OF REELS	LENGTH
1	2' - 6"
2	2' - 6"
3	3' - 6"

CORD REEL @ CANOPY 1" = 1'-0" 5

PLOT DATE: 11/1/2022 10:07:52 PM

FOR BID ONLY

Teter, LLP expressly reserves its common law copyright and other property rights in these plans. This document, the ideas and designs incorporated herein, as an instrument of professional service, is not to be used in whole or part, for any other project without prior written authorization.

MARK	DATE	DESCRIPTION
	11/1/2022	DSA RESUBMITTAL

TETER, LLP
FRESNO HEADQUARTERS
VISALIA | BAKERSFIELD | MODESTO | SAN LUIS OBISPO
ARCHITECTS ENGINEERS CONNECTED

TULARE CAMPUS CTE
COLLEGE OF THE SEQUOIAS
4999 E. BARDSLEY AVE.
TULARE, CA

DRAWING TITLE
CORD/HOSE REEL DETAILS

PROJECT NO.
21-12032

DRAWING
A851

\\tetr-file1\Users\ryan.odom\Documents\12032-A-COS Tulare CTE_ryan.odomNLB27.rvt

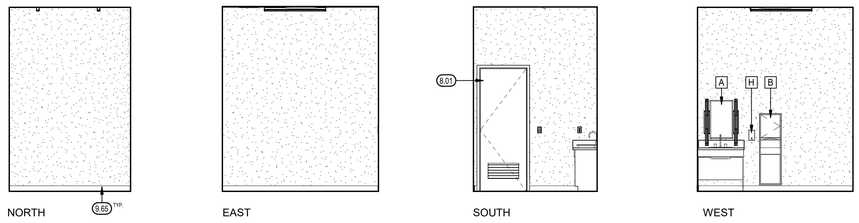

D1 LACTATION

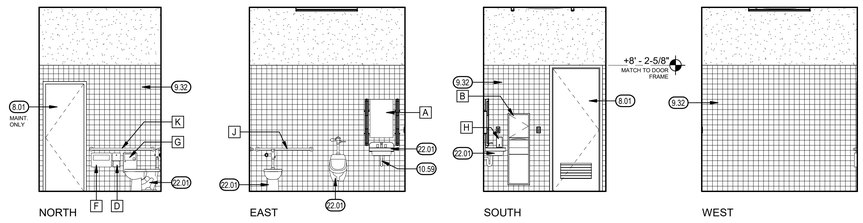

D2 GENDER NEUTRAL R.R.
(F1 GENDER NEUTRAL R.R. - SIM.)
(F30 GENDER NEUTRAL R.R. - O.H.)

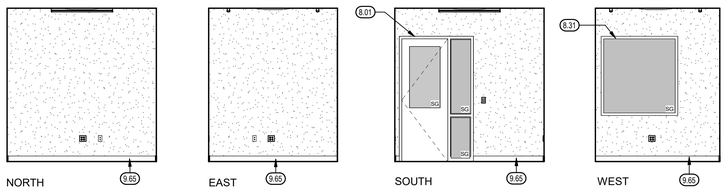

D4 OFFICE

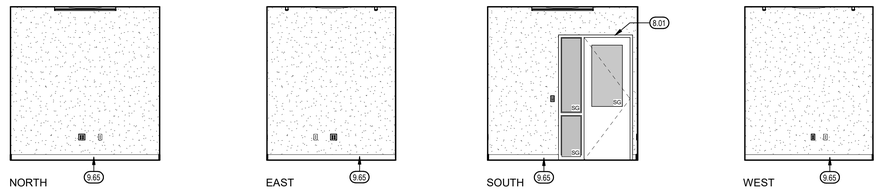

D5 OFFICE

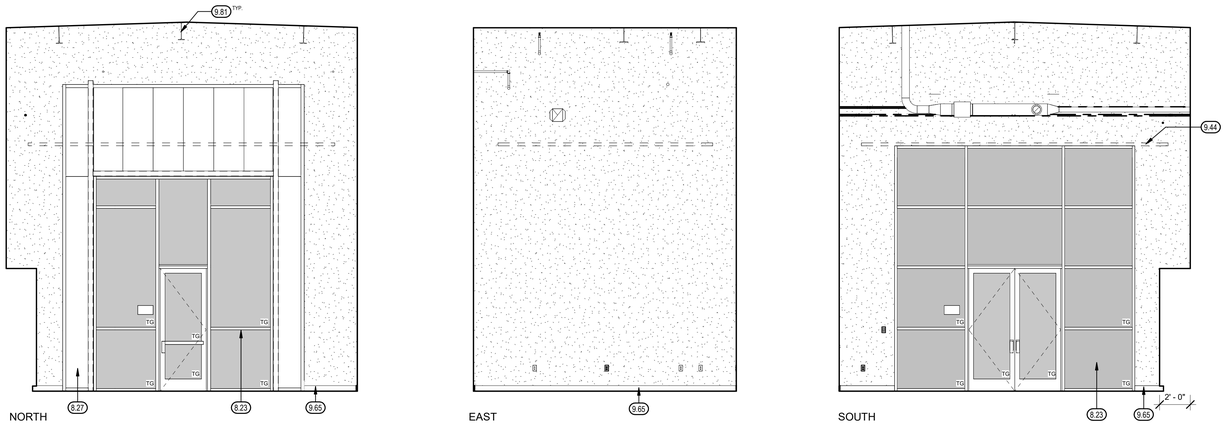

D6 DISPLAY SPACE

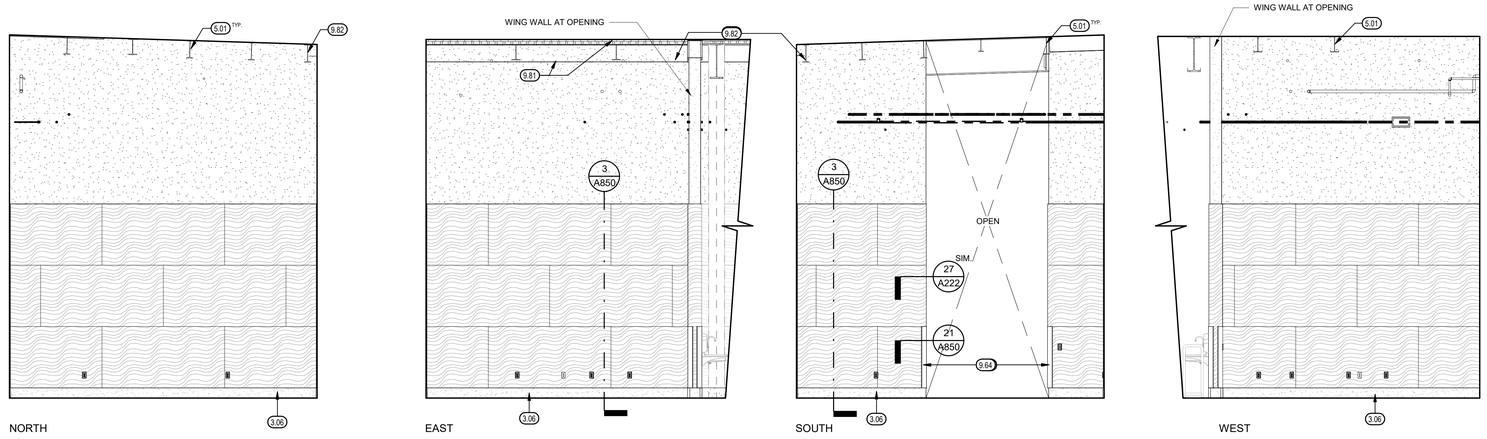

D7 STORAGE

KEYNOTES (XX.XX)

3.06	8" HIGH CONCRETE CURB FACE TO MATCH SLAB w/ 3/8" RAD. COVE, TYP.
5.01	STRUCTURAL STEEL FRAMING, SEE STRUCTURAL
6.22	PLASTIC LAMINATE BASE CABINET, SEE INTERIOR ELEVATIONS AND 7/A850 FOR ANCHORAGE
6.33	LAMINATE PLASTIC FACED OPEN TALL WALL CABINET
8.01	DOOR AND FRAME AS SCHEDULED (SIDE LITES WHERE INDICATED)
8.23	ALUMINUM CURTAIN WALL WINDOWS & ENTRANCE DOORS, SEE SCHEDULES
8.27	TRANSLUCENT GLAZING PANELS
8.31	WINDOW AS SCHEDULED
9.32	THIN SET CERAMIC TILE
9.44	FREE FLOATING SUSPENDED METAL PANEL CEILING, SEE SHEET A942
9.64	4" STAINLESS STEEL CORNER GUARD
9.65	4" RUBBER TOP SET BASE
9.81	PAINT EXPOSED STEEL ROOF STRUCTURE, DECKING & UTILITIES ABOVE
9.82	SHEET METAL CLOSURE (PAINT), SEE DETAIL 29 / A850
10.59	PROTECTIVE WRAP AT SUPPLY AND WASTE PIPING UNDER SINK/LAVATORY
12.14	STAINLESS STEEL (16 GA.) COUNTER & EDGES
22.01	ACCESSIBLE PLUMBING FIXTURE, SEE PLUMBING

LEGEND

GYPSUM BOARD (TEXTURE & PAINT)

GLAZING - AS SCHEDULED, SEE A701

3/4" PLYWOOD PANELING (U.N.O.)
SEE FASTENING DETAILS **2 / A850** AND
3 / A850 - FINISH PER SCHEDULE

GENERAL NOTES

A. FOR ACCESSIBILE TOILET ROOM FIXTURE AND ACCESSORY MOUNTING HEIGHTS AND CLEARANCES, SEE **2 / A801**

B. FOR TOILET ROOM ELEVATIONS FOR BUILDINGS D AND F, REFER TO SHEET A224

C. SEE FINISH SCHEDULE FOR ROOMS NOT SHOWN IN INTERIOR ELEVATIONS.

D. ALL CABINETS ARE TO HAVE PLASTIC LAMINATE COUNTERS, SPLASHES & EXPOSED FACES, U.N.O. OVER MIN. 8 LAYER PLYWOOD

TOILET ACCESSORY SCHEDULE

MARK	DESCRIPTION	MFR.	MODEL NO.	REMARKS
A	MIRROR (18" X 30")	BOBRICK	B-165	SURFACE MTD.
B	PAPER TOWEL DISPENSER / WASTE RECEPTACLE COMBO UNIT	BOBRICK	B-3944	RECESSED 4" WASTE RECEPTECLE PROJECION
C	TOILET TISSUE DISPENSER	BOBRICK	B-2888	SURFACE / PARTITION MTD.
D	TOILET TISSUE DISPENSER	BOBRICK	B-3888	RECESSED
E	TOILET SEAT COVER DISPENSER	BOBRICK	B-301	RECESSED
F	TOILET SEAT COVER DISPENSER	BOBRICK	B-4221	SURFACE MTD.
G	SANITARY NAPKIN DISPOSAL UNIT	BOBRICK	B-270	SURFACE MTD.
H	SOAP DISPENSER	BOBRICK	B-2111	SURFACE MTD.
J	GRAB BAR, REAR	BOBRICK	B-6806 SERIES	42" LONG
K	GRAB BAR, SIDE	BOBRICK	B-6806 SERIES	48" LONG

KEYPLAN

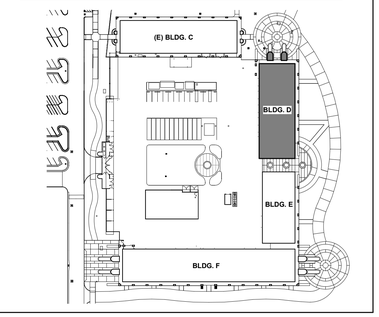

FOR BID ONLY

Teter, LLP expressly reserves its common law copyright and other property rights in these plans. This document, the ideas and designs incorporated herein, as an instrument of professional service, is not to be used in whole or in part, for any other project without prior written authorization.

MARK	DATE	DESCRIPTION
	11/1/2022	DSA RESUBMITTAL

LICENSED ARCHITECT * VINDON LEE COUNTER * No. C-29823 * STATE OF CALIFORNIA

TETER, LLP
FRESNO HEADQUARTERS
VISALIA | BAKERSFIELD | MODESTO | SAN LUIS OBISPO
ARCHITECTS ENGINEERS CONNECTED

TETER

TULARE CAMPUS CTE
COLLEGE OF THE SEQUOIAS
4999 E. BARDSLEY AVE.
TULARE, CA

DRAWING TITLE
INTERIOR ELEVATIONS

PROJECT NO.
21-12032

DRAWING
A900

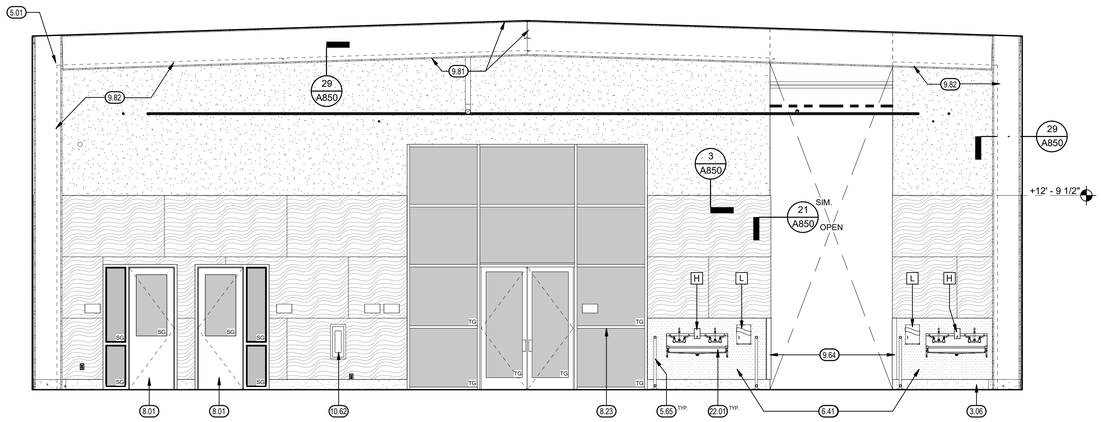

NORTH

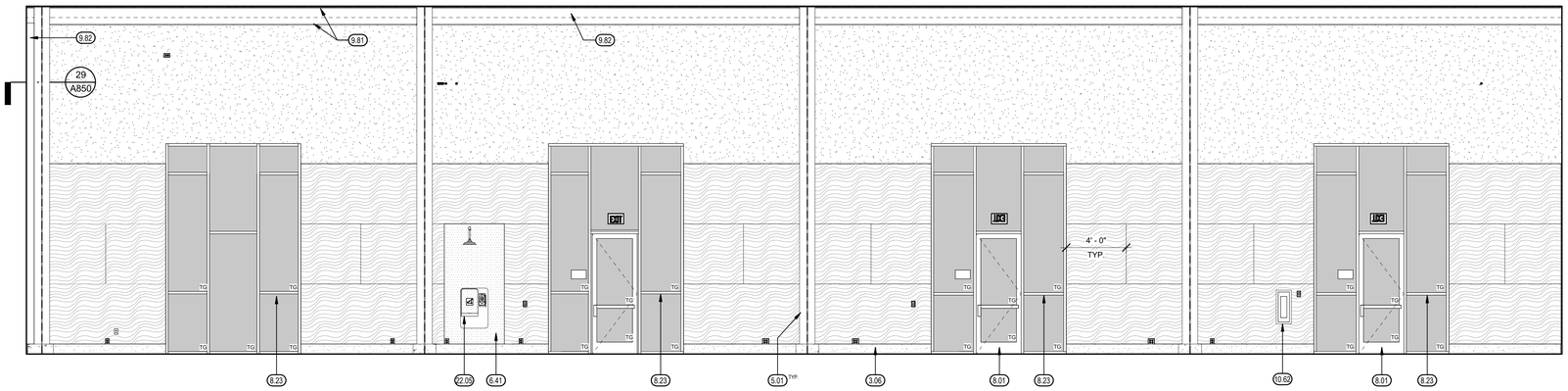

EAST

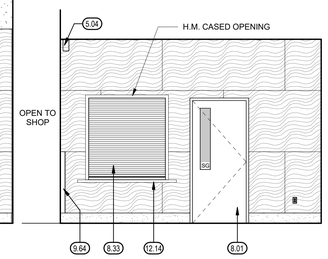

PARTIAL EAST

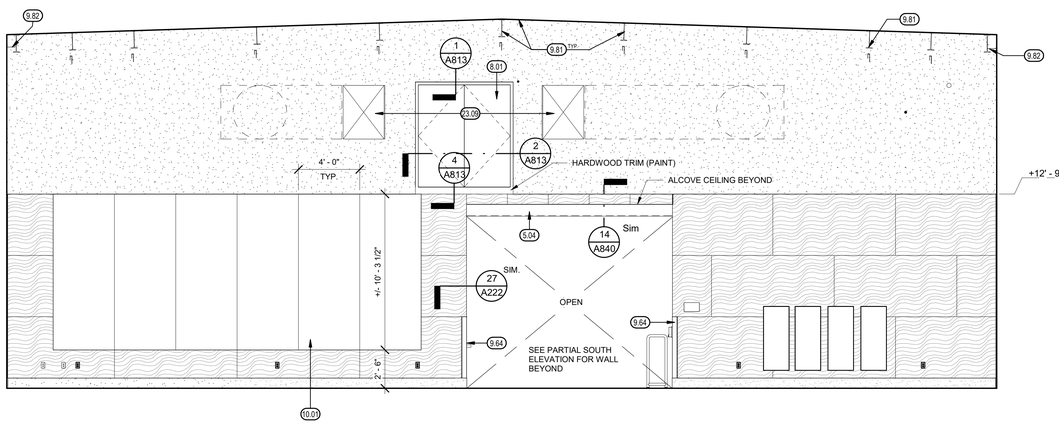

SOUTH

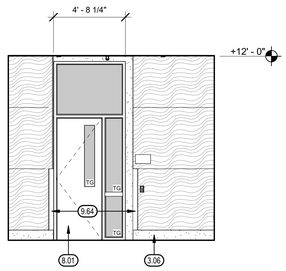

PARTIAL SOUTH ELEVATION AT ALCOVE

D8 AUTOMOTIVE TECHNOLOGY

KEYNOTES (00.00)

3.06	8" HIGH CONCRETE CURB FACE TO MATCH SLAB w/ 3/8" RAD. COVE, TYP.
5.01	STRUCTURAL STEEL FRAMING, SEE STRUCTURAL
5.04	FLOOR SUPPORT BEAM (PAINT), SEE STRUCTURAL
5.65	PIPE GUARD AT DRINKING FOUNTAINS & WASH SINKS, SEE DETAIL **9 / A801**
6.41	FRP PANEL OVER PLYWOOD WALL FINISH
8.01	DOOR AND FRAME AS SCHEDULED (SIDE LITES WHERE INDICATED)
8.23	ALUMINUM CURTAIN WALL WINDOWS & ENTRANCE DOORS, SEE SCHEDULES
8.33	ROLL-UP COILING COUNTER WINDOW (OTHER SIDE OF WALL)
9.64	4' STAINLESS STEEL CORNER GUARD
9.81	PAINT EXPOSED STEEL ROOF STRUCTURE, DECKING & UTILITIES ABOVE
9.82	SHEET METAL CLOSURE (PAINT), SEE DETAIL 29 / A850
10.01	HIGH PRESSURE LAMINATE MAGNETIC MARKER BOARDS
10.62	FIRE EXTINGUISHER CABINET AND FIRE EXTINGUISHER
12.14	STAINLESS STEEL (16 GA.) COUNTER & EDGES
22.01	ACCESSIBLE PLUMBING FIXTURE, SEE PLUMBING
22.05	EMERGENCY EYE WASH/SHOWER, SEE PLUMBING
23.09	AIR DUCT OPENING, SEE MECHANICAL
26.05	ELECTRICAL PANEL, SEE ELECTRICAL

LEGEND

GYPSUM BOARD (TEXTURE & PAINT)

GLAZING - AS SCHEDULED, SEE A701

3/4" PLYWOOD PANELING (U.N.O.)
SEE FASTENING DETAILS **2 / A850** AND **3 / A850** - FINISH PER SCHEDULE

GENERAL NOTES

A. FOR ACCESSIBILE TOILET ROOM FIXTURE AND ACCESSORY MOUNTING HEIGHTS AND CLEARANCES, SEE **2 / A801**

B. FOR TOILET ROOM ELEVATIONS FOR BUILDINGS D AND F, REFER TO SHEET A224

C. SEE FINISH SCHEDULE FOR ROOMS NOT SHOWN IN INTERIOR ELEVATIONS.

D. ALL CABINETS ARE TO HAVE PLASTIC LAMINATE COUNTERS, SPLASHES & EXPOSED FACES, U.N.O. OVER MIN. 8 LAYER PLYWOOD

TOILET ACCESSORY SCHEDULE

MARK	DESCRIPTION	MFR.	MODEL NO.	REMARKS
H	SOAP DISPENSER	BOBRICK	B-2111	SURFACE MTD.
L	PAPER TOWEL DISPENSER	BOBRICK	B-262	SURFACE MTD.

KEYPLAN

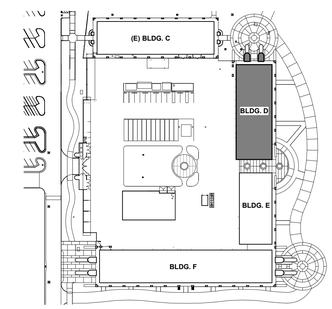

FOR BID ONLY

Teter, LLP expressly reserves its common law copyright and other property rights in these plans. This document, the ideas and designs incorporated herein, as an instrument of professional service, is not to be used in whole or part, for any other project without prior written authorization.

MARK	DATE	DESCRIPTION
	11/1/2022	DSA RESUBMITTAL

TETER, LLP
ARCHITECTS ENGINEERS CONNECTED
FRESNO HEADQUARTERS
VISALIA | BAKERSFIELD | MODESTO | SAN LUIS OBISPO

TETER

TULARE CAMPUS CTE
COLLEGE OF THE SEQUOIAS
4999 E. BARDSLEY AVE.
TULARE, CA

DRAWING TITLE
INTERIOR ELEVATIONS

PROJECT NO.
21-12032

DRAWING
A901

\\tetr-file1\Users\ryan.odom\Documents\12032-A-COS Tulare CTE_ryan.odomNLB27.rvt
PLOT DATE: 11/1/2022 10:08:47 PM

\\tetr-file1\Users\ryan.odom\Documents\12032-A-COS Tulare CTE_ryan.odomNLB27.rvt

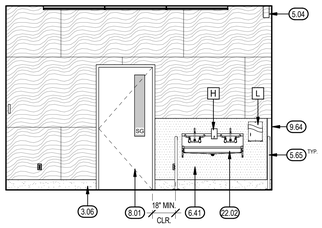

PARTIAL WEST ELEVATION AT ALCOVE

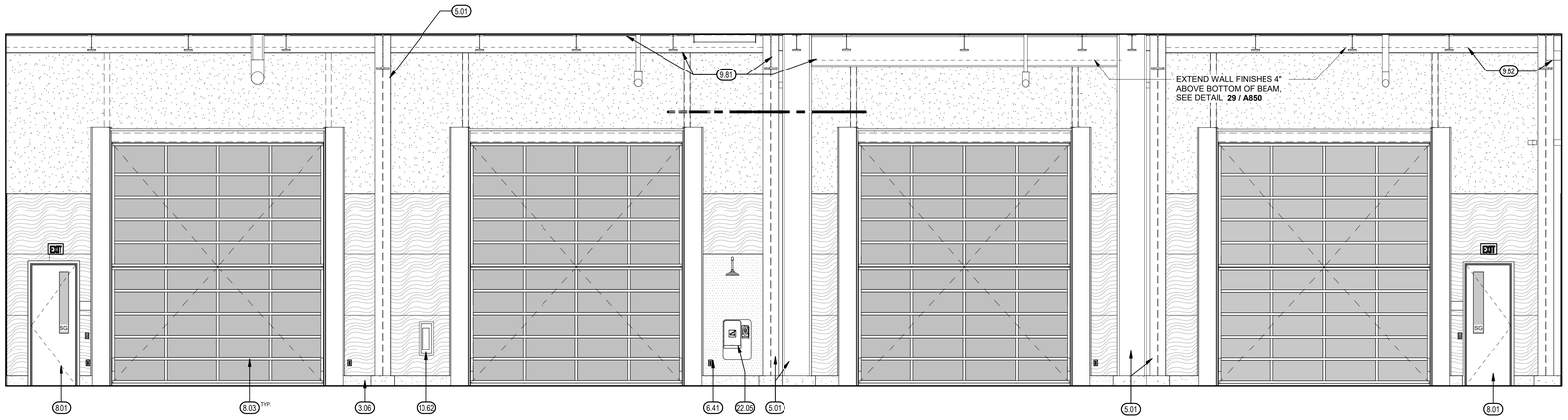

WEST

D8 AUTOMOTIVE TECHNOLGY

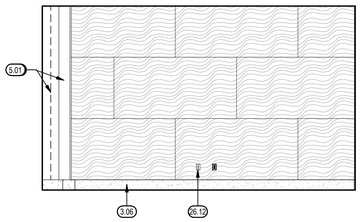

NORTH

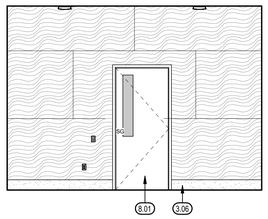

EAST

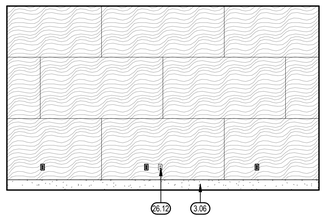

SOUTH

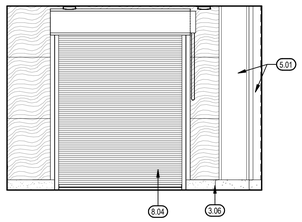

WEST

D9 STORAGE

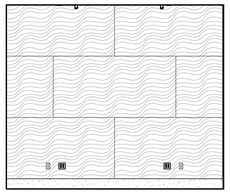

NORTH

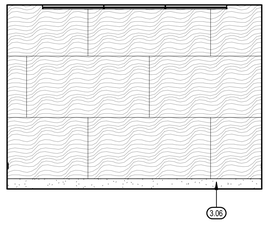

EAST

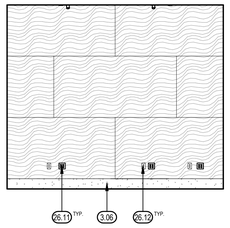

SOUTH

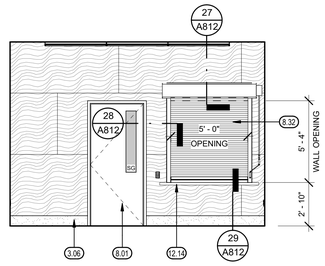

WEST

D10 STORAGE

INTERIOR ELEVATIONS

1/4" = 1'-0" | 4

KEYNOTES (00.00)

3.06	8" HIGH CONCRETE CURB FACE TO MATCH SLAB w/ 3/8" RAD. COVE, TYP.
5.01	STRUCTURAL STEEL FRAMING, SEE STRUCTURAL
5.04	FLOOR SUPPORT BEAM (PAINT), SEE STRUCTURAL
5.65	PIPE GUARD AT DRINKING FOUNTAINS & WASH SINKS, SEE DETAIL **9 / A801**
6.41	FRP PANEL OVER PLYWOOD WALL FINISH
8.01	DOOR AND FRAME AS SCHEDULED (SIDE LITES WHERE INDICATED)
8.03	VERTICAL BI-FOLD STEEL DOORS WITH GLASS PANELS (FULLY TEMPERED)
8.04	OVERHEAD COILING DOOR & STEEL FRAME
8.32	OVERHEAD COILING SERVICE WINDOW
9.64	4" STAINLESS STEEL CORNER GUARD
9.81	PAINT EXPOSED STEEL ROOF STRUCTURE, DECKING & UTILITIES ABOVE
9.82	SHEET METAL CLOSURE (PAINT), SEE DETAIL 29 / A850
12.14	STAINLESS STEEL (16 GA.) COUNTER & EDGES
22.02	PLUMBING FIXTURE, SEE PLUMBING
22.05	EMERGENCY EYE WASH/SHOWER, SEE PLUMBING
26.11	ELECTRICAL OUTLET, SEE ELECTRICAL
26.12	DATA OUTLET, SEE ELECTRICAL

LEGEND

GYPSUM BOARD (TEXTURE & PAINT)

GLAZING - AS SCHEDULED, SEE A701

3/4" PLYWOOD PANELING (U.N.O.) SEE FASTENING DETAILS **2 / A850** AND **3 / A850** - FINISH PER SCHEDULE

TOILET ACCESSORY SCHEDULE

MARK	DESCRIPTION	MFR.	MODEL NO.	REMARKS
H	SOAP DISPENSER	BOBRICK	B-2111	SURFACE MTD.
L	PAPER TOWEL DISPENSER	BOBRICK	B-262	SURFACE MTD.

GENERAL NOTES

A. FOR ACCESSIBILE TOILET ROOM FIXTURE AND ACCESSORY MOUNTING HEIGHTS AND CLEARANCES, SEE **2 / A801**

B. FOR TOILET ROOM ELEVATIONS FOR BUILDINGS D AND F, REFER TO SHEET A224

C. SEE FINISH SCHEDULE FOR ROOMS NOT SHOWN IN INTERIOR ELEVATIONS.

D. ALL CABINETS ARE TO HAVE PLASTIC LAMINATE COUNTERS, SPLASHES & EXPOSED FACES, U.N.O. OVER MIN. 8 LAYER PLYWOOD

KEYPLAN

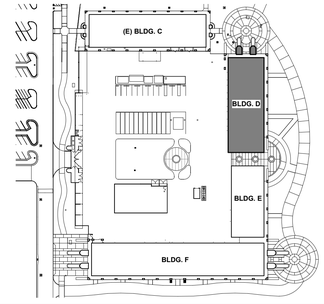

FOR BID ONLY

Teter, LLP expressly reserves its common law copyright and other property rights in these plans. This document, the ideas and designs incorporated herein, as an instrument of professional service, is not to be used in whole or in part, for any other project without prior written authorization.

MARK	DATE	DESCRIPTION
	11/1/2022	DSA RESUBMITTAL

LICENSED ARCHITECT * VINDICATION * JOHN C. COUPER * 23893 * STATE OF CALIFORNIA

TETER, LLP
FRESNO HEADQUARTERS
VISALIA | BAKERSFIELD | MODESTO | SAN LUIS OBISPO
ARCHITECTS ENGINEERS CONNECTED

TETER

TULARE CAMPUS CTE
COLLEGE OF THE SEQUOIAS
4999 E. BARDSLEY AVE.
TULARE, CA

DRAWING TITLE
INTERIOR ELEVATIONS

PROJECT NO.
21-12032

DRAWING
A902

PLOT DATE: 11/1/2022 10:09:06 PM

\\tet-file1\Users\ryan.odom\Documents\12032-A-COS Tulare CTE_ryan.odomNLB27.rvt

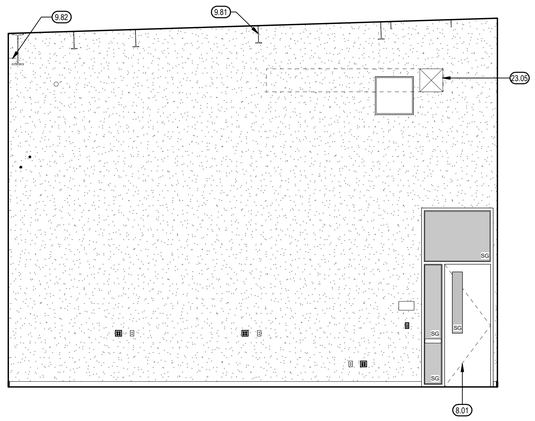

NORTH

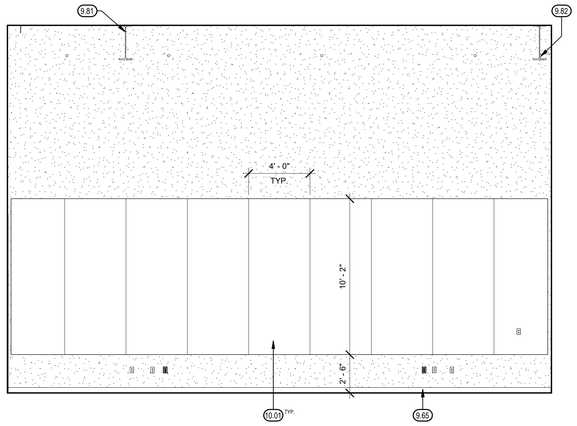

EAST

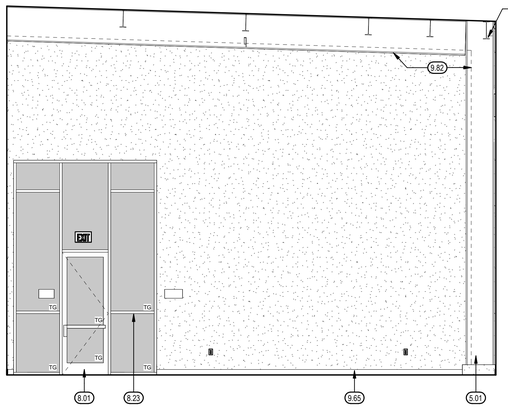

SOUTH

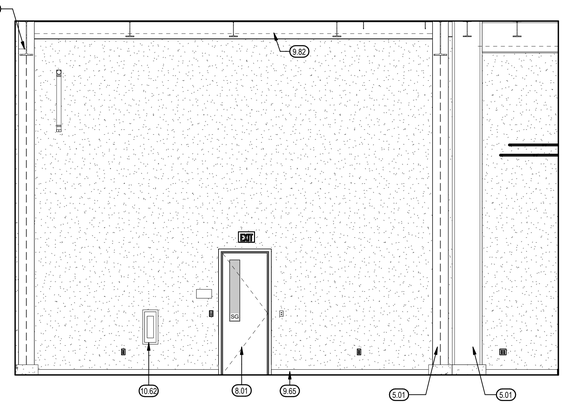

WEST

D13 COMPUTER LAB

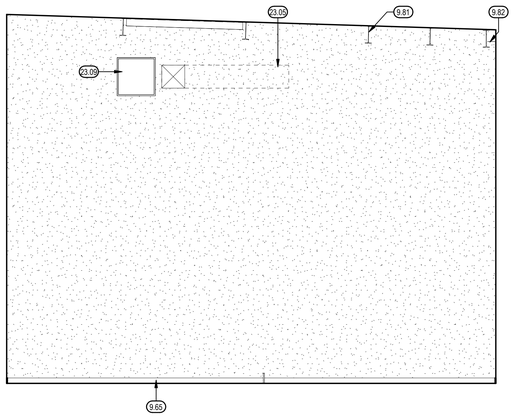

NORTH

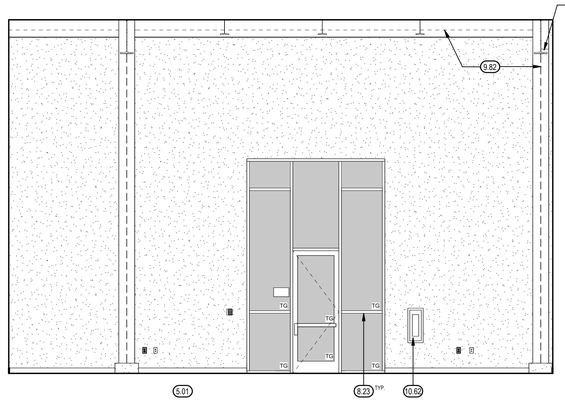

EAST

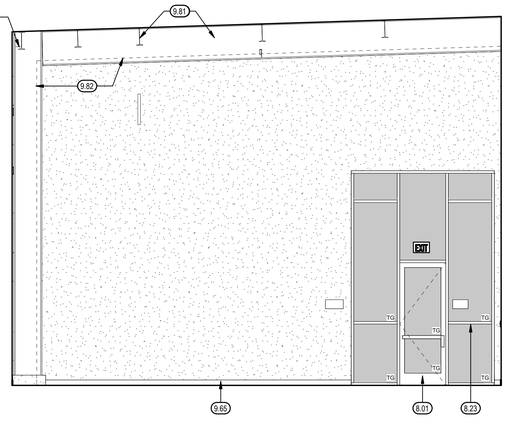

SOUTH

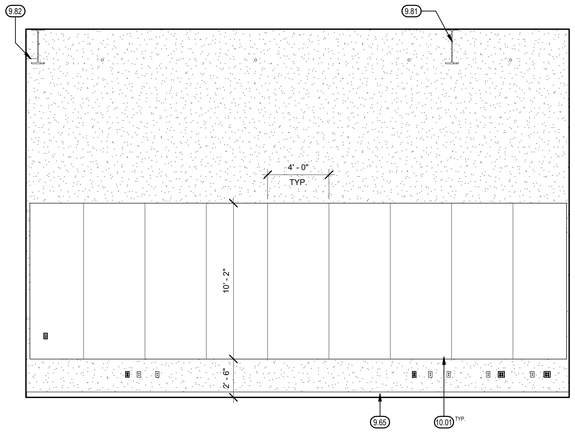

WEST

D14 COMPUTER LAB

INTERIOR ELEVATIONS

1/4" = 1'-0" | 4

KEYNOTES (00.00)

5.01	STRUCTURAL STEEL FRAMING, SEE STRUCTURAL
8.01	DOOR AND FRAME AS SCHEDULED (SIDE LITES WHERE INDICATED)
8.23	ALUMINUM CURTAIN WALL WINDOWS & ENTRANCE DOORS, SEE SCHEDULES
9.65	4" RUBBER TOP SET BASE
9.81	PAINT EXPOSED STEEL ROOF STRUCTURE, DECKING & UTILITIES ABOVE
9.82	SHEET METAL CLOSURE (PAINT), SEE DETAIL 29 / A850
10.01	HIGH PRESSURE LAMINATE MAGNETIC MARKER BOARDS
10.62	FIRE EXTINGUISHER CABINET AND FIRE EXTINGUISHER
23.05	DUCT, SEE MECH, PAINT
23.09	AIR DUCT OPENING, SEE MECHANICAL

LEGEND

GYPSUM BOARD (TEXTURE & PAINT)

GLAZING - AS SCHEDULED, SEE A701

GENERAL NOTES

A. FOR ACCESSIBILE TOILET ROOM FIXTURE AND ACCESSORY MOUNTING HEIGHTS AND CLEARANCES, SEE **2 / A801**

B. FOR TOILET ROOM ELEVATIONS FOR BUILDINGS D AND F, REFER TO SHEET A224

C. SEE FINISH SCHEDULE FOR ROOMS NOT SHOWN IN INTERIOR ELEVATIONS.

D. ALL CABINETS ARE TO HAVE PLASTIC LAMINATE COUNTERS, SPLASHES & EXPOSED FACES, U.N.O. OVER MIN. 8 LAYER PLYWOOD

KEYPLAN

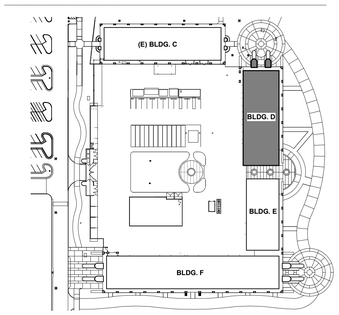

PLOT DATE: 11/1/2022 10:09:23 PM

FOR BID ONLY

Teter, LLP expressly reserves its common law copyright and other property rights in these plans. This document, the ideas and designs incorporated herein, as an instrument of professional service, is not to be used in whole or part, for any other project without prior written authorization.

MARK	DATE	DESCRIPTION
	11/1/2022	DSA RESUBMITTAL

LICENSED ARCHITECT * VINOD KUMAR * COUNTER * C 23893 * JOSE * STATE OF CALIFORNIA

TETER, LLP
ARCHITECTS ENGINEERS CONNECTED
FRESNO HEADQUARTERS
VISALIA | BAKERSFIELD | MODESTO | SAN LUIS OBISPO
TETER

TULARE CAMPUS CTE
COLLEGE OF THE SEQUOIAS
4999 E. BARDSLEY AVE.
TULARE, CA

DRAWING TITLE
INTERIOR ELEVATIONS

PROJECT NO.
21-12032

DRAWING
A903

\\tetr-file1\Users\ryan.odom\Documents\12032-A-COS Tulare CTE_ryan.odomNLB27.rvt

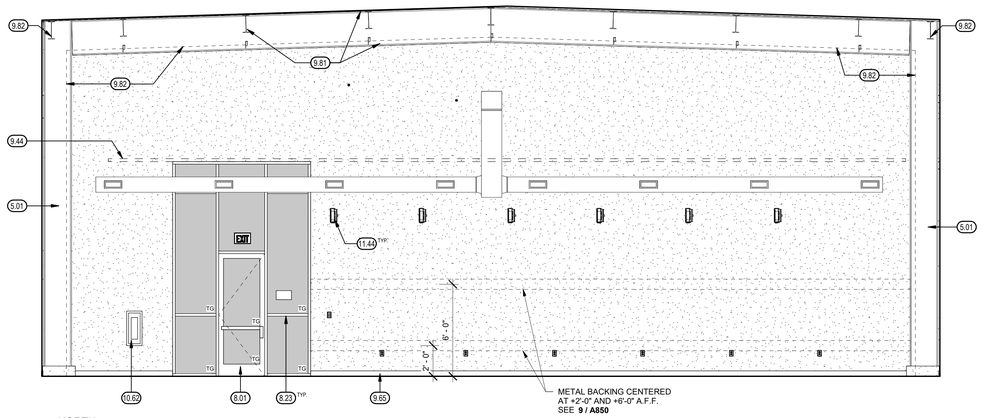

NORTH

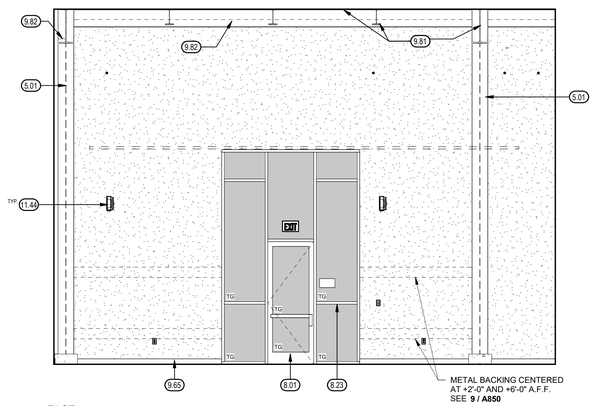

EAST

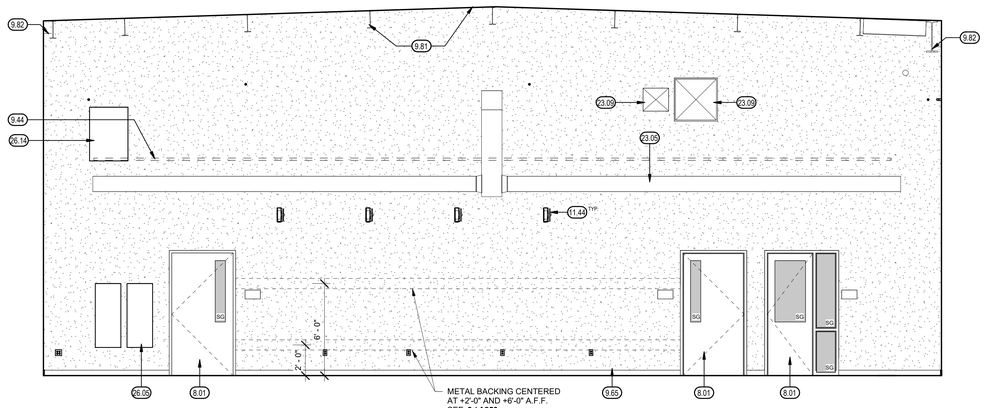

SOUTH

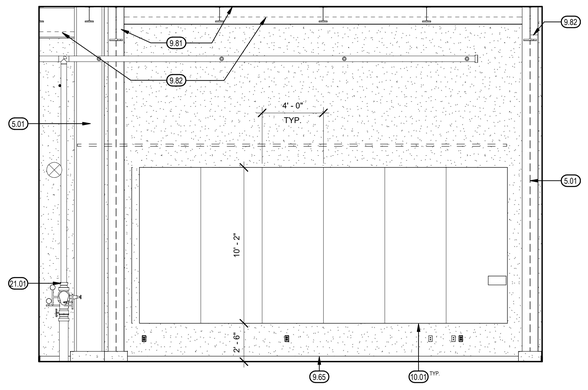

WEST

E1 INDUSTRIAL AUTOMATION TECHNOLOGY

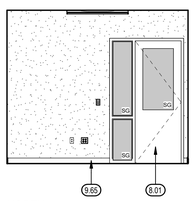

NORTH

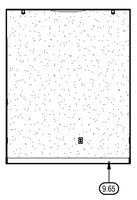

EAST

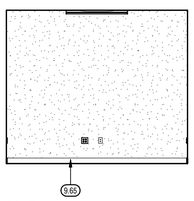

SOUTH

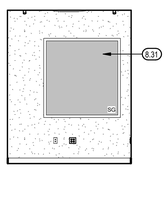

WEST

E2 OFFICE

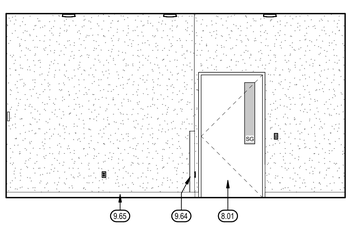

NORTH

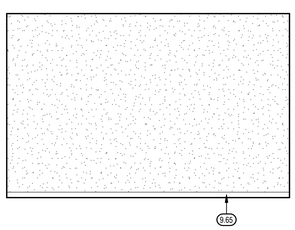

EAST

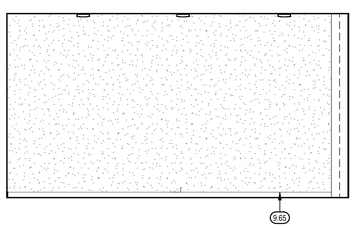

SOUTH

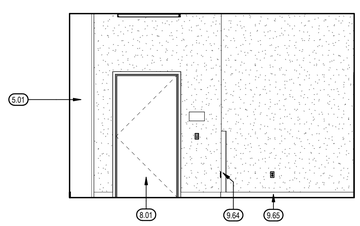

WEST

E3 STORAGE

KEYNOTES (00.00)

5.01	STRUCTURAL STEEL FRAMING, SEE STRUCTURAL
8.01	DOOR AND FRAME AS SCHEDULED (SIDE LITES WHERE INDICATED)
8.23	ALUMINUM CURTAIN WALL WINDOWS & ENTRANCE DOORS, SEE SCHEDULES
8.31	WINDOW AS SCHEDULED
9.44	FREE FLOATING SUSPENDED METAL PANEL CEILING, SEE SHEET A842
9.64	4' STAINLESS STEEL CORNER GUARD
9.65	4" RUBBER TOP SET BASE
9.81	PAINT EXPOSED STEEL ROOF STRUCTURE, DECKING & UTILITIES ABOVE
9.82	SHEET METAL CLOSURE (PAINT), SEE DETAIL 29 / A850
10.01	HIGH PRESSURE LAMINATE MAGNETIC MARKER BOARDS
10.62	FIRE EXTINGUISHER CABINET AND FIRE EXTINGUISHER
11.44	HOSE REEL, ATTACH TO STUDS W/3 #14 M.S. OR BACKING PER 9 / A850
21.01	FIRE SPRINKLER RISER, SEE FIRE PROTECTION
23.05	DUCT, SEE MECH, PAINT
23.09	AIR DUCT OPENING, SEE MECHANICAL
26.05	ELECTRICAL PANEL, SEE ELECTRICAL
26.14	WALL MOUNTED ELECTRICAL TRANSFORMER, SEE ELECTRICAL

LEGEND

GYPSUM BOARD (TEXTURE & PAINT)

GLAZING - AS SCHEDULED, SEE A701

GENERAL NOTES

A. FOR ACCESSIBILE TOILET ROOM FIXTURE AND ACCESSORY MOUNTING HEIGHTS AND CLEARANCES, SEE **2 / A801**

B. FOR TOILET ROOM ELEVATIONS FOR BUILDINGS D AND F, REFER TO SHEET A224

C. SEE FINISH SCHEDULE FOR ROOMS NOT SHOWN IN INTERIOR ELEVATIONS.

D. ALL CABINETS ARE TO HAVE PLASTIC LAMINATE COUNTERS, SPLASHES & EXPOSED FACES, U.N.O. OVER MIN. 8 LAYER PLYWOOD

KEYPLAN

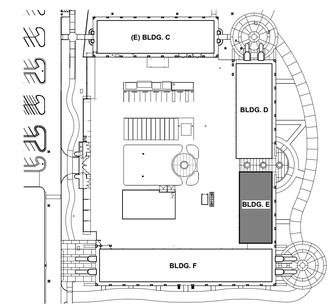

FOR BID ONLY

Teter, LLP expressly reserves its common law copyright and other property rights in these plans. This document, the ideas and designs incorporated herein, as an instrument of professional service, is not to be used in whole or in part, for any other project without prior written authorization.

MARK	DATE	DESCRIPTION
	11/1/2022	DSA RESUBMITTAL

LICENSED ARCHITECT JOSHUA COLLIER VINDICATED 2022 STATE OF CALIFORNIA

TETER, LLP
FRESNO HEADQUARTERS
VISALIA | BAKERSFIELD | MODESTO | SAN LUIS OBISPO
ARCHITECTS ENGINEERS CONNECTED

TULARE CAMPUS CTE
COLLEGE OF THE SEQUOIAS
4999 E. BARDSLEY AVE.
TULARE, CA

DRAWING TITLE
INTERIOR ELEVATIONS

PROJECT NO.
21-12032

DRAWING
A910

\\tetr-file1\Users\ryan.odom\Documents\12032-A-COS Tulare CTE_ryan.odomNLB27.rvt

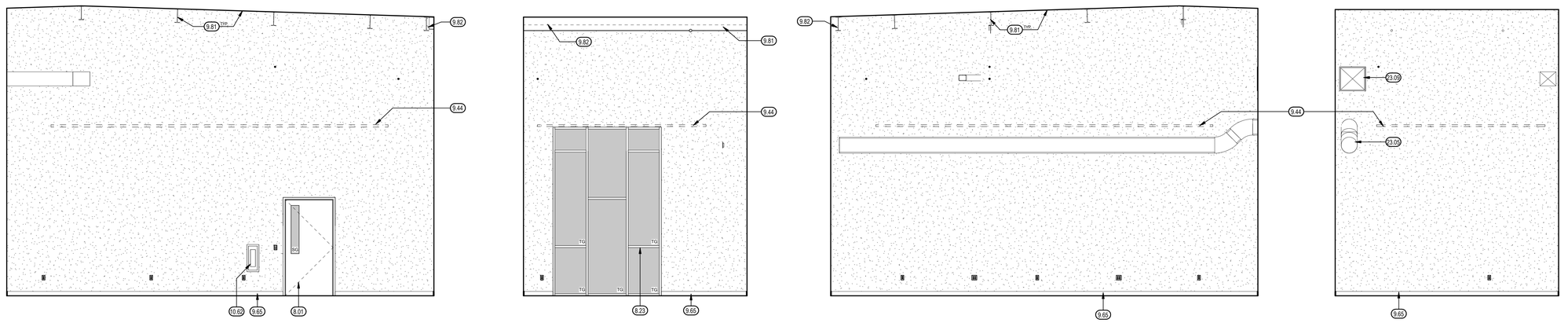

E4 INDUSTRIAL AUTOMATION ROBOTICS

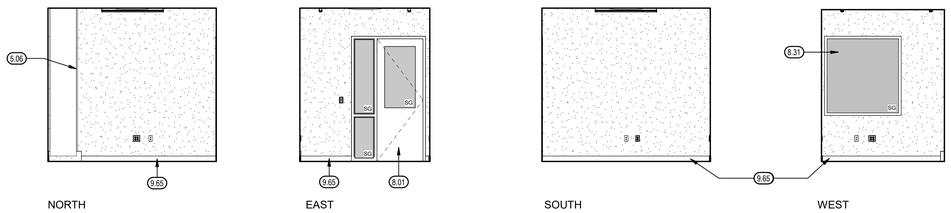

E5 OFFICE

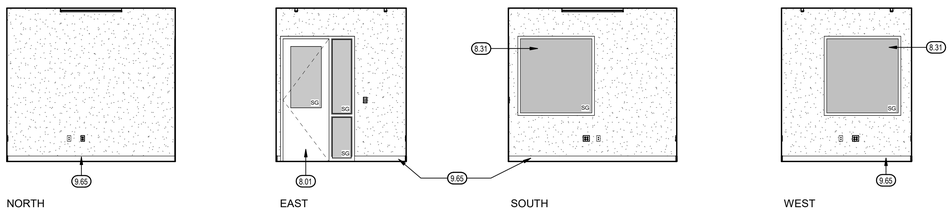

E6 OFFICE

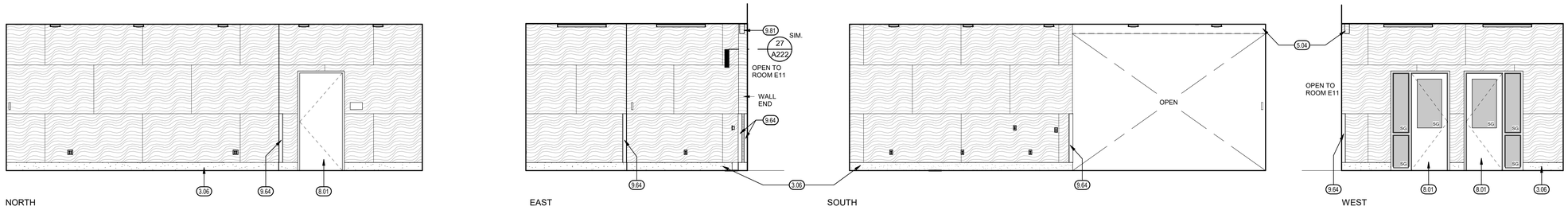

E7 STORAGE

INTERIOR ELEVATIONS

1/4" = 1'-0" | 4

KEYNOTES (30.00)

3.06	8" HIGH CONCRETE CURB FACE TO MATCH SLAB w/ 3/8" RAD. COVE, TYP.
5.04	FLOOR SUPPORT BEAM (PAINT), SEE STRUCTURAL
5.06	STRUCTURAL STEEL COLUMN, TYP. SEE STRUCTURAL
8.01	DOOR AND FRAME AS SCHEDULED (SIDE LITES WHERE INDICATED)
8.23	ALUMINUM CURTAIN WALL WINDOWS & ENTRANCE DOORS, SEE SCHEDULES
8.31	WINDOW AS SCHEDULED
9.44	FREE FLOATING SUSPENDED METAL PANEL CEILING, SEE SHEET A842
9.64	4" STAINLESS STEEL CORNER GUARD
9.65	4" RUBBER TOP SET BASE
9.81	PAINT EXPOSED STEEL ROOF STRUCTURE, DECKING & UTILITIES ABOVE
9.82	SHEET METAL CLOSURE (PAINT). SEE DETAIL 29 / A850
10.62	FIRE EXTINGUISHER CABINET AND FIRE EXTINGUISHER
23.05	DUCT, SEE MECH, PAINT
23.09	AIR DUCT OPENING, SEE MECHANICAL

LEGEND

- GYPSUM BOARD (TEXTURE & PAINT)
- GLAZING - AS SCHEDULED, SEE A701
- 3/4" PLYWOOD PANELING (U.N.O.) SEE FASTENING DETAILS **2 / A850**, **3 / A850** - FINISH PER SCHEDULE

GENERAL NOTES

A. FOR ACCESSIBILE TOILET ROOM FIXTURE AND ACCESSORY MOUNTING HEIGHTS AND CLEARANCES, SEE **2 / A801**

B. FOR TOILET ROOM ELEVATIONS FOR BUILDINGS D AND F, REFER TO SHEET A224

C. SEE FINISH SCHEDULE FOR ROOMS NOT SHOWN IN INTERIOR ELEVATIONS.

D. ALL CABINETS ARE TO HAVE PLASTIC LAMINATE COUNTERS, SPLASHES & EXPOSED FACES, U.N.O. OVER MIN. 8 LAYER PLYWOOD

KEYPLAN

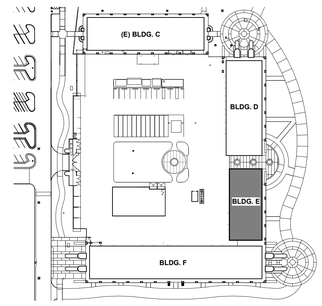

PLOT DATE: 11/1/2022 10:10:11 PM

FOR BID ONLY

Teter, LLP expressly reserves its common law copyright and other property rights in these plans. This document, the ideas and designs incorporated herein, as an instrument of professional service, is not to be used in whole or part, for any other project without prior written authorization.

MARK	DATE	DESCRIPTION
	11/1/2022	DSA RESUBMITTAL

LICENSED ARCHITECT ★ VINOD KUMAR ★ STATE OF CALIFORNIA ★ C-23693 ★ 2024

TETER, LLP
FRESNO HEADQUARTERS
VISALIA | BAKERSFIELD | MODESTO | SAN LUIS OBISPO
ARCHITECTS ENGINEERS CONNECTED

TETER

TULARE CAMPUS CTE
COLLEGE OF THE SEQUOIAS
4999 E. BARDSLEY AVE.
TULARE, CA

DRAWING TITLE
INTERIOR ELEVATIONS

PROJECT NO.
21-12032

DRAWING
A911

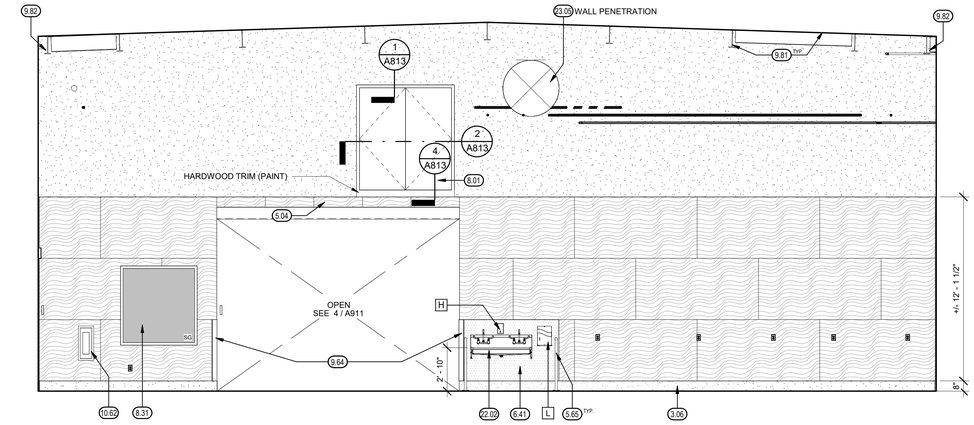

NORTH

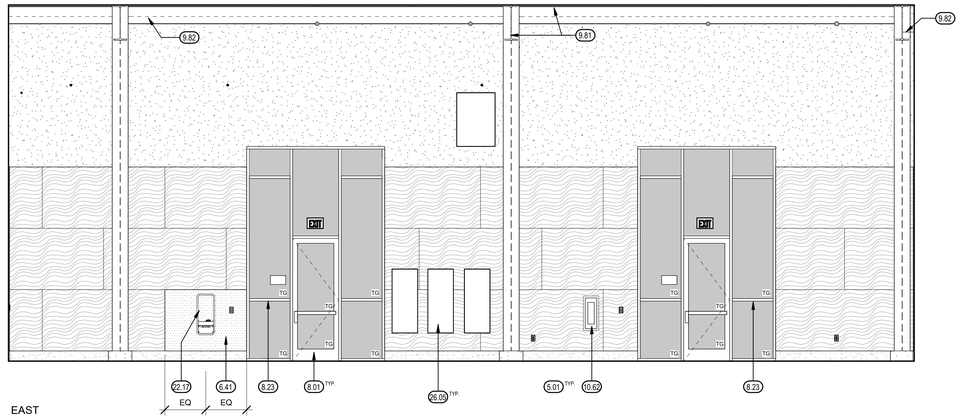

EAST

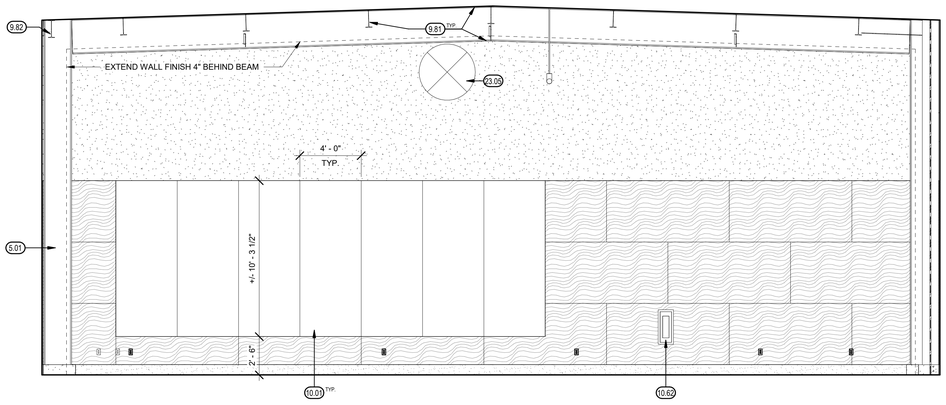

SOUTH

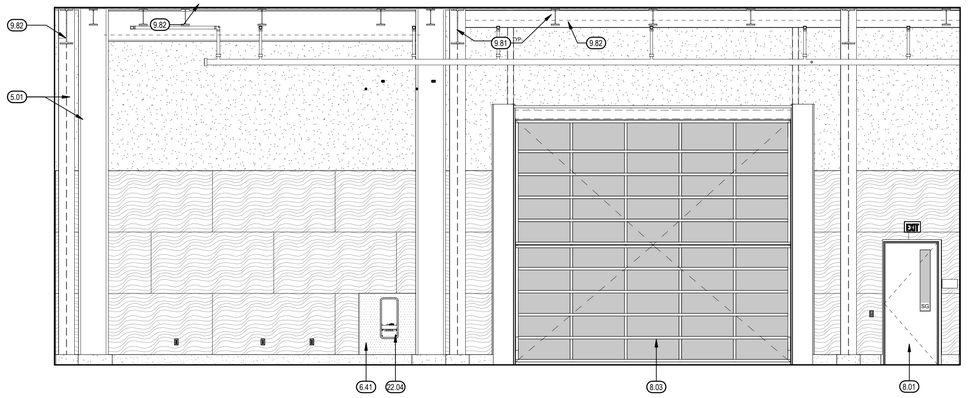

WEST

E11 AGRICULTURAL MECHANICS

INTERIOR ELEVATIONS

1/4" = 1'-0" | 4

KEYNOTES (00.00)

3.06	8" HIGH CONCRETE CURB FACE TO MATCH SLAB w/ 3/8" RAD. COVE, TYP.
5.01	STRUCTURAL STEEL FRAMING, SEE STRUCTURAL
5.04	FLOOR SUPPORT BEAM (PAINT), SEE STRUCTURAL
5.65	PIPE GUARD AT DRINKING FOUNTAINS & WASH SINKS, SEE DETAIL **9 / A801**
6.41	FRP PANEL OVER PLYWOOD WALL FINISH
8.01	DOOR AND FRAME AS SCHEDULED (SIDE LITES WHERE INDICATED)
8.03	VERTICAL BI-FOLD STEEL DOORS WITH GLASS PANELS (FULLY TEMPERED)
8.23	ALUMINUM CURTAIN WALL WINDOWS & ENTRANCE DOORS, SEE SCHEDULES
8.31	WINDOW AS SCHEDULED
9.64	4" STAINLESS STEEL CORNER GUARD
9.81	PAINT EXPOSED STEEL ROOF STRUCTURE, DECKING & UTILITIES ABOVE
9.82	SHEET METAL CLOSURE (PAINT), SEE DETAIL 29 / A850
10.01	HIGH PRESSURE LAMINATE MAGNETIC MARKER BOARDS
10.62	FIRE EXTINGUISHER CABINET AND FIRE EXTINGUISHER
22.02	PLUMBING FIXTURE, SEE PLUMBING
22.04	EMERGENCY EYE WASH, SEE PLUMBING
22.17	EYEWASH, SEE PLUMBING
23.05	DUCT, SEE MECH, PAINT
26.05	ELECTRICAL PANEL, SEE ELECTRICAL

TOILET ACCESSORY SCHEDULE

MARK	DESCRIPTION	MFR.	MODEL NO.	REMARKS
H	SOAP DISPENSER	BOBRICK	B-2111	SURFACE MTD.
L	PAPER TOWEL DISPENSER	BOBRICK	B-262	SURFACE MTD.

LEGEND

GYPSUM BOARD (TEXTURE & PAINT)

GLAZING - AS SCHEDULED, SEE A701

3/4" PLYWOOD PANELING (U.N.O.)
SEE FASTENING DETAILS **2 / A850**, **3 / A850** - FINISH PER SCHEDULE

GENERAL NOTES

A. FOR ACCESSIBILE TOILET ROOM FIXTURE AND ACCESSORY MOUNTING HEIGHTS AND CLEARANCES, SEE **2 / A801**

B. FOR TOILET ROOM ELEVATIONS FOR BUILDINGS D AND F, REFER TO SHEET A224

C. SEE FINISH SCHEDULE FOR ROOMS NOT SHOWN IN INTERIOR ELEVATIONS.

D. ALL CABINETS ARE TO HAVE PLASTIC LAMINATE COUNTERS, SPLASHES & EXPOSED FACES, U.N.O. OVER MIN. 8 LAYER PLYWOOD

KEYPLAN

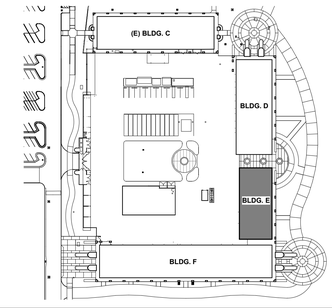

FOR BID ONLY

Teter, LLP expressly reserves its common law copyright and other property rights in these plans. This document, the ideas and designs incorporated herein, as an instrument of professional service, is not to be used in whole or in part, for any other project without prior written authorization.

MARK	DATE	DESCRIPTION
	11/1/2022	DSA RESUBMITTAL

TETER, LLP
ARCHITECTS ENGINEERS CONNECTED
FRESNO HEADQUARTERS
VISALIA | BAKERSFIELD | MODESTO | SAN LUIS OBISPO

TULARE CAMPUS CTE
COLLEGE OF THE SEQUOIAS
4999 E. BARDSLEY AVE.
TULARE, CA

DRAWING TITLE
INTERIOR ELEVATIONS

PROJECT NO.
21-12032

DRAWING
A912

\\tetr-file1\Users\ryan.odom\Documents\12032-A-COS Tulare CTE_ryan.odomNLB27.rvt
PLOT DATE: 11/1/2022 10:10:23 PM

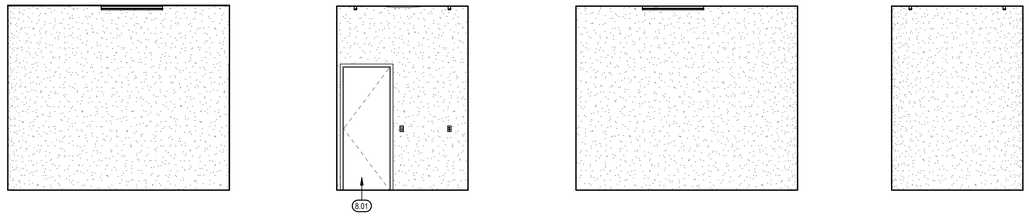

NORTH EAST SOUTH WEST

F2 STORAGE
(F32 STORAGE - SIMILAR OPP. HAND)

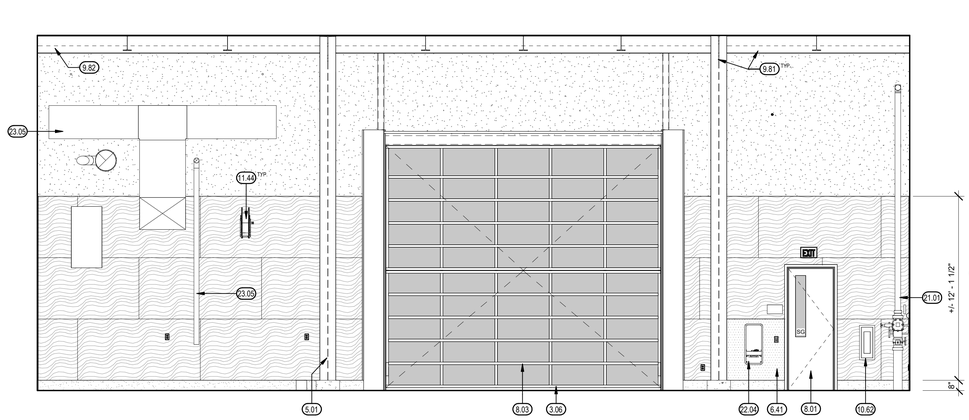

NORTH

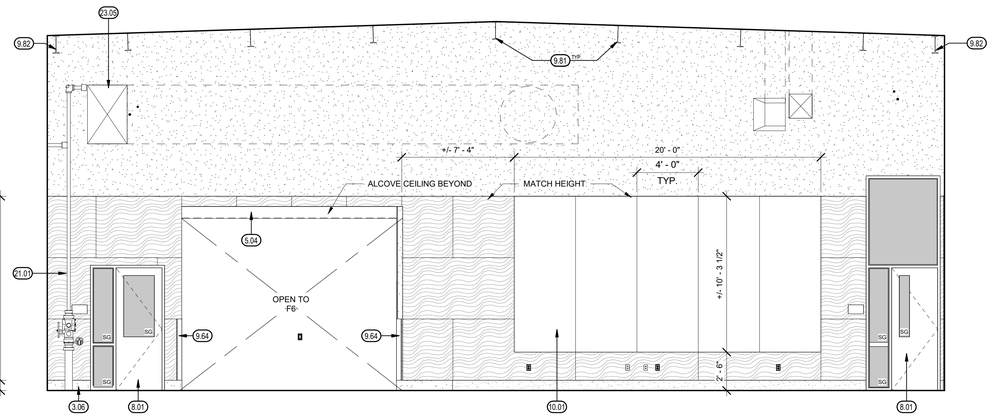

EAST

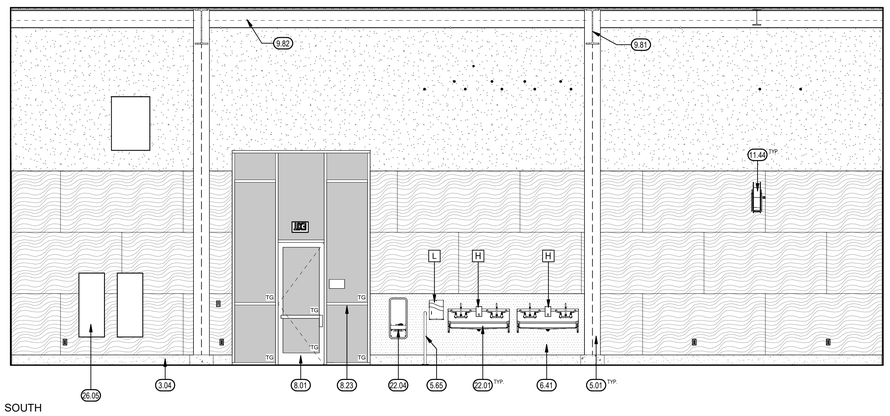

SOUTH

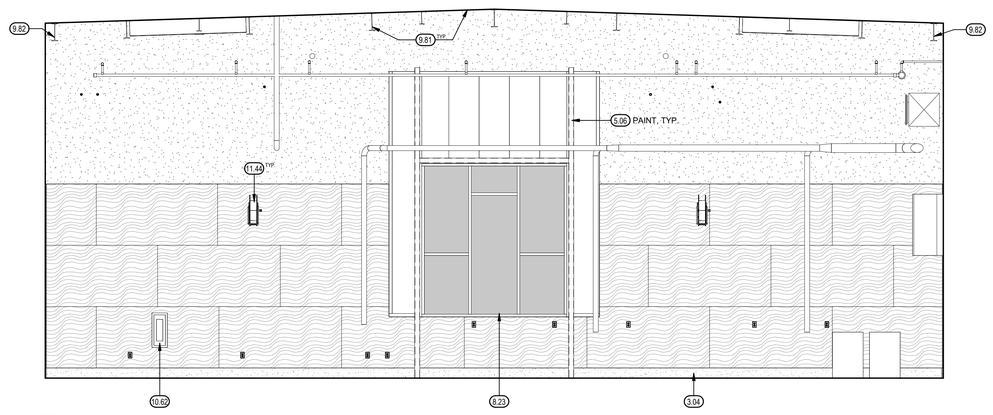

WEST

F3 CONSTRUCTION TECHNOLOGY

INTERIOR ELEVATIONS

1/4" = 1'-0" | 4

KEYNOTES (00.00)

3.04	8" HIGH CONCRETE CURB, TYP.
3.06	8" HIGH CONCRETE CURB FACE TO MATCH SLAB w/ 3/8" RAD. COVE, TYP.
5.01	STRUCTURAL STEEL FRAMING, SEE STRUCTURAL
5.04	FLOOR SUPPORT BEAM (PAINT), SEE STRUCTURAL
5.06	STRUCTURAL STEEL COLUMN, TYP. SEE STRUCTURAL
5.65	PIPE GUARD AT DRINKING FOUNTAINS & WASH SINKS, SEE DETAIL **9 / A801**
6.41	FRP PANEL OVER PLYWOOD WALL FINISH
8.01	DOOR AND FRAME AS SCHEDULED (SIDE LITES WHERE INDICATED)
8.03	VERTICAL BI-FOLD STEEL DOORS WITH GLASS PANELS (FULLY TEMPERED)
8.23	ALUMINUM CURTAIN WALL WINDOWS & ENTRANCE DOORS, SEE SCHEDULES
9.64	4" STAINLESS STEEL CORNER GUARD
9.81	PAINT EXPOSED STEEL ROOF STRUCTURE, DECKING & UTILITIES ABOVE
9.82	SHEET METAL CLOSURE (PAINT), SEE DETAIL 29 / A850
10.01	HIGH PRESSURE LAMINATE MAGNETIC MARKER BOARDS
10.62	FIRE EXTINGUISHER CABINET AND FIRE EXTINGUISHER
11.44	HOSE REEL, ATTACH TO STUDS W/3 #14 M.S. OR BACKING PER 9 / A850
21.01	FIRE SPRINKLER RISER, SEE FIRE PROTECTION
22.01	ACCESSIBLE PLUMBING FIXTURE, SEE PLUMBING
22.04	EMERGENCY EYE WASH, SEE PLUMBING
23.05	DUCT, SEE MECH, PAINT
26.05	ELECTRICAL PANEL, SEE ELECTRICAL

TOILET ACCESSORY SCHEDULE

MARK	DESCRIPTION	MFR.	MODEL NO.	REMARKS
H	SOAP DISPENSER	BOBRICK	B-2111	SURFACE MTD.
L	PAPER TOWEL DISPENSER	BOBRICK	B-262	SURFACE MTD.

LEGEND

GYPSUM BOARD (TEXTURE & PAINT)

GLAZING - AS SCHEDULED, SEE A701

3/4" PLYWOOD PANELING (U.N.O.) SEE FASTENING DETAILS **2 / A850**, **3 / A850** - FINISH PER SCHEDULE

GENERAL NOTES

A. FOR ACCESSIBILE TOILET ROOM FIXTURE AND ACCESSORY MOUNTING HEIGHTS AND CLEARANCES, SEE **2 / A801**

B. FOR TOILET ROOM ELEVATIONS FOR BUILDINGS D AND F, REFER TO SHEET A224

C. SEE FINISH SCHEDULE FOR ROOMS NOT SHOWN IN INTERIOR ELEVATIONS.

D. ALL CABINETS ARE TO HAVE PLASTIC LAMINATE COUNTERS, SPLASHES & EXPOSED FACES, U.N.O. OVER MIN. 8 LAYER PLYWOOD

KEYPLAN

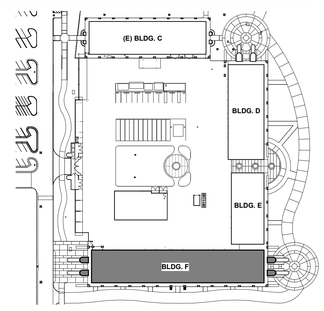

FOR BID ONLY

Teter, LLP expressly reserves its common law copyright and other property rights in these plans. This document, the ideas and designs incorporated herein, as an instrument of professional service, is not to be used in whole or part, for any other project without prior written authorization.

MARK	DATE	DESCRIPTION
	11/1/2022	DSA RESUBMITTAL

LICENSED ARCHITECT JOANN QUINTER C 28893 STATE OF CALIFORNIA

TETER, LLP
ARCHITECTS ENGINEERS CONNECTED
FRESNO HEADQUARTERS
VISALIA | BAKERSFIELD | MODESTO | SAN LUIS OBISPO

TETER

TULARE CAMPUS CTE
COLLEGE OF THE SEQUOIAS
4999 E. BARDSLEY AVE.
TULARE, CA

DRAWING TITLE
INTERIOR ELEVATIONS

PROJECT NO.
21-12032

DRAWING
A920

PLOT DATE: 11/1/2022 10:10:40 PM

\\tetr-file1\Users\ryan.odom\Documents\12032-A-COS Tulare CTE_ryan.odomNLB27.rvt

\\tetr-file1\Users\ryan.odom\Documents\12032-A-COS Tulare CTE_ryan.odomNLB27.rvt

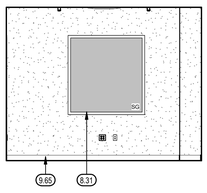

NORTH

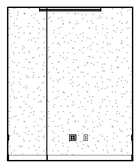

EAST

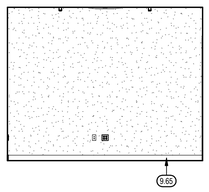

SOUTH

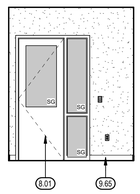

WEST

F4 OFFICE

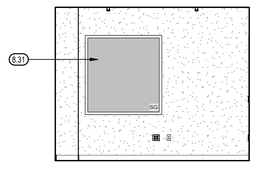

NORTH

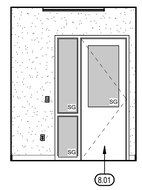

EAST

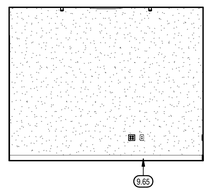

SOUTH

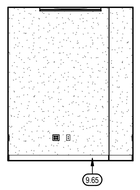

WEST

F5 OFFICE

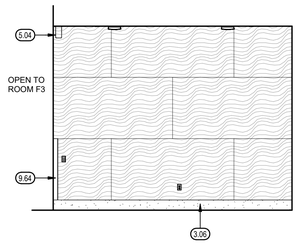

NORTH

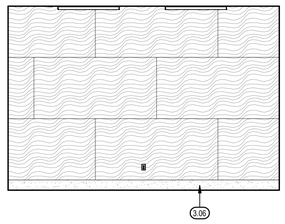

EAST

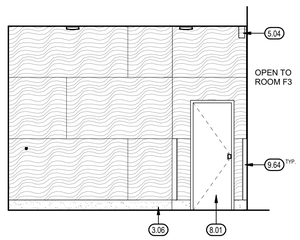

SOUTH

F6 STORAGE

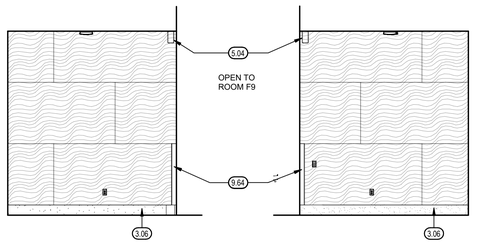

NORTH

SOUTH

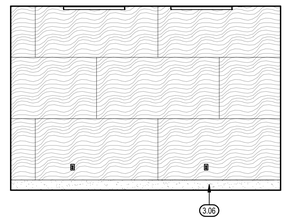

WEST

F7 STORAGE

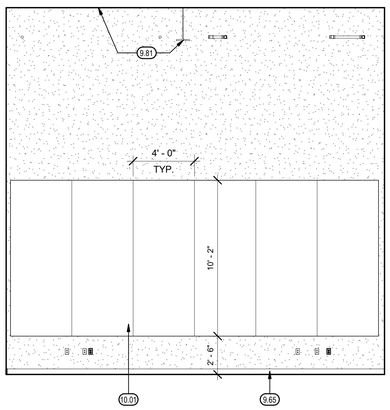

NORTH

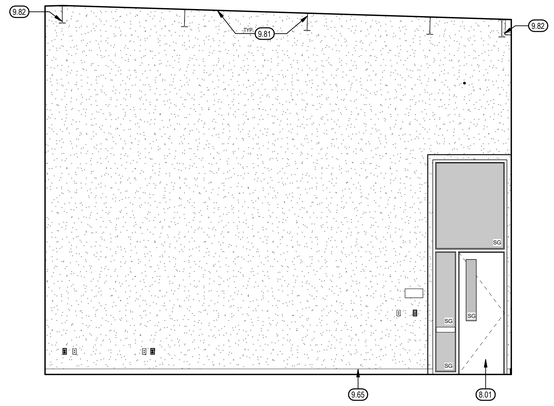

EAST

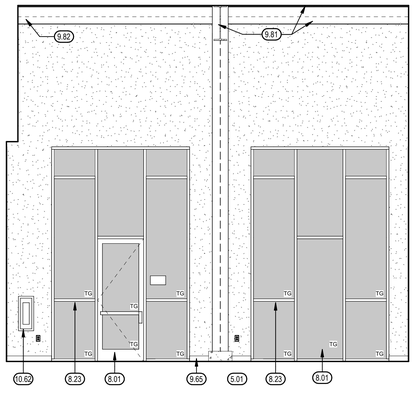

SOUTH

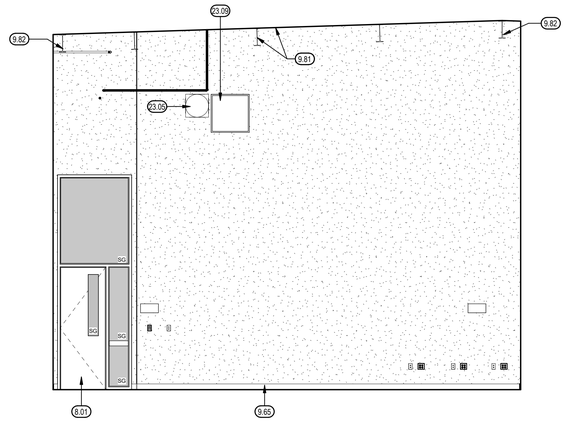

WEST

F8 CLASSROOM

INTERIOR ELEVATIONS

1/4" = 1'-0" | 4

KEYNOTES (KO.OO)

3.06	8" HIGH CONCRETE CURB FACE TO MATCH SLAB w/ 3/8" RAD. COVE. TYP.
5.01	STRUCTURAL STEEL FRAMING, SEE STRUCTURAL
5.04	FLOOR SUPPORT BEAM (PAINT), SEE STRUCTURAL
8.01	DOOR AND FRAME AS SCHEDULED (SIDE LITES WHERE INDICATED)
8.23	ALUMINUM CURTAIN WALL WINDOWS & ENTRANCE DOORS, SEE SCHEDULES
8.31	WINDOW AS SCHEDULED
9.64	4" STAINLESS STEEL CORNER GUARD
9.65	4" RUBBER TOP SET BASE
9.81	PAINT EXPOSED STEEL ROOF STRUCTURE, DECKING & UTILITIES ABOVE
9.82	SHEET METAL CLOSURE (PAINT), SEE DETAIL 29 / A850
10.01	HIGH PRESSURE LAMINATE MAGNETIC MARKER BOARDS
10.62	FIRE EXTINGUISHER CABINET AND FIRE EXTINGUISHER
23.05	DUCT, SEE MECH, PAINT
23.09	AIR DUCT OPENING, SEE MECHANICAL

LEGEND

GYPSUM BOARD (TEXTURE & PAINT)

GLAZING - AS SCHEDULED, SEE A701

3/4" PLYWOOD PANELING (U.N.O.) SEE FASTENING DETAILS **2 / A850**, **3 / A850** - FINISH PER SCHEDULE

GENERAL NOTES

A. FOR ACCESSIBILE TOILET ROOM FIXTURE AND ACCESSORY MOUNTING HEIGHTS AND CLEARANCES, SEE **2 / A801**

B. FOR TOILET ROOM ELEVATIONS FOR BUILDINGS D AND F, REFER TO SHEET A224

C. SEE FINISH SCHEDULE FOR ROOMS NOT SHOWN IN INTERIOR ELEVATIONS.

D. ALL CABINETS ARE TO HAVE PLASTIC LAMINATE COUNTERS, SPLASHES & EXPOSED FACES, U.N.O. OVER MIN. 8 LAYER PLYWOOD

KEYPLAN

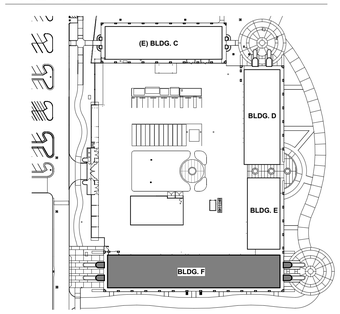

FOR BID ONLY

Teter, LLP expressly reserves its common law copyright and other property rights in these plans. This document, the ideas and designs incorporated herein, as an instrument of professional service, is not to be used in whole or part, for any other project without prior written authorization.

MARK	DATE	DESCRIPTION
	11/1/2022	DSA RESUBMITTAL

TETER, LLP
ARCHITECTS ENGINEERS CONNECTED
FRESNO HEADQUARTERS
VISALIA I BAKERSFIELD I MODESTO I SAN LUIS OBISPO

TETER

TULARE CAMPUS CTE
COLLEGE OF THE SEQUOIAS
4999 E. BARDSLEY AVE.
TULARE, CA

DRAWING TITLE
INTERIOR ELEVATIONS

PROJECT NO.
21-12032

DRAWING
A921

PLOT DATE: 11/1/2022 10:11:06 PM

\\tetr-file1\Users\ryan.odom\Documents\12032-A-COS Tulare CTE_ryan.odomNLB27.rvt

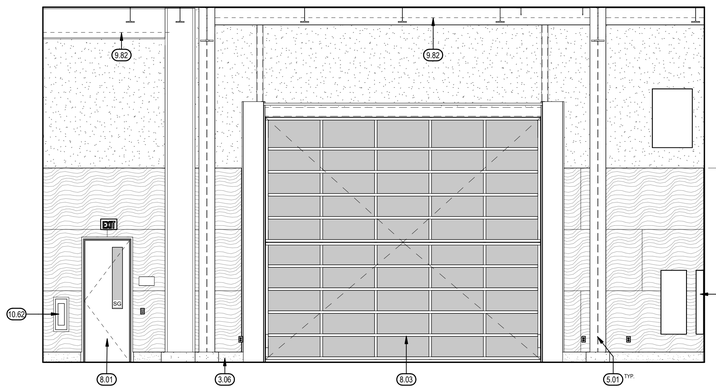

NORTH

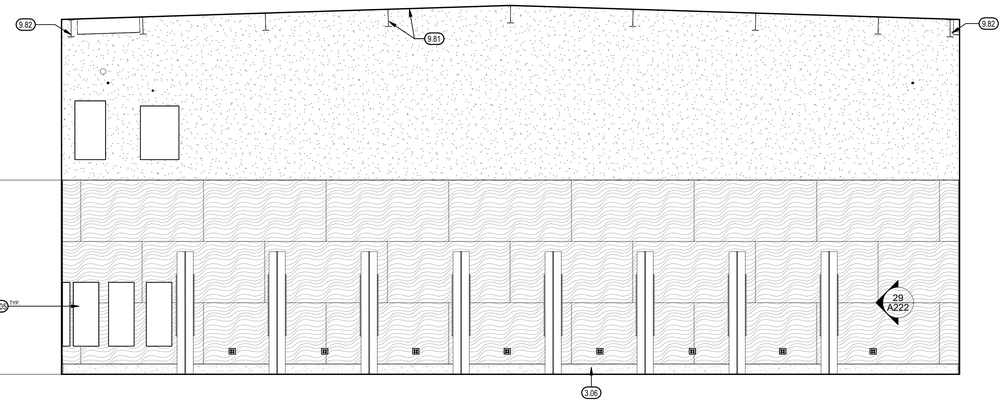

EAST

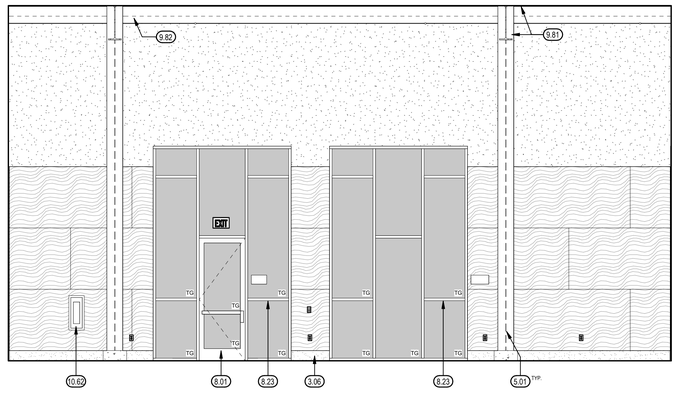

SOUTH

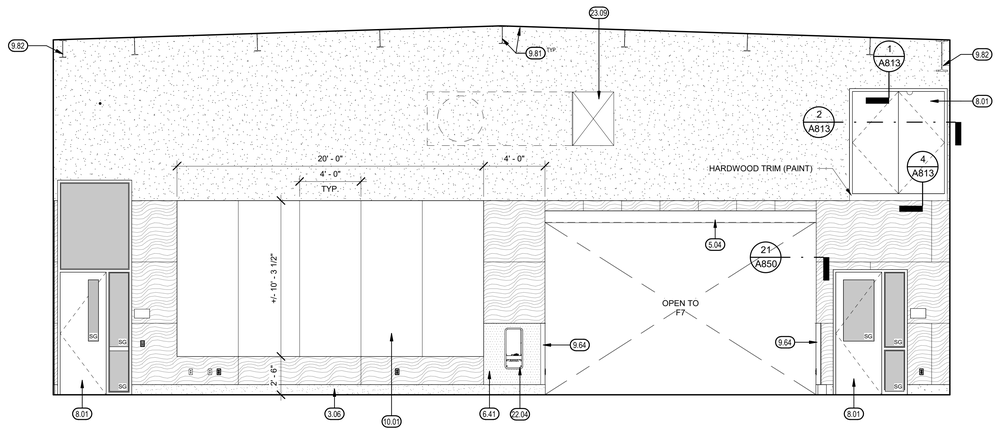

WEST

F9 ELECTRICIAN TRAINING

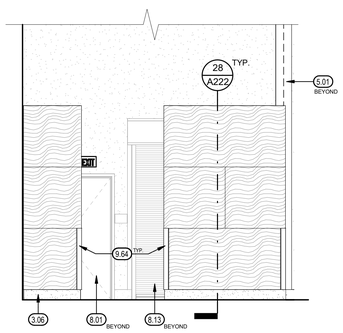

SOUTH WALL OUTER SIDE

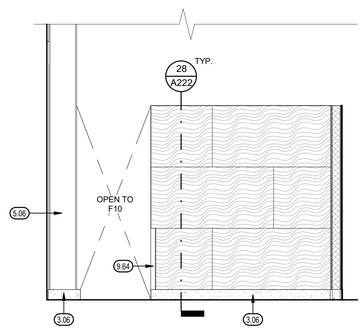

EAST WALL INSIDE

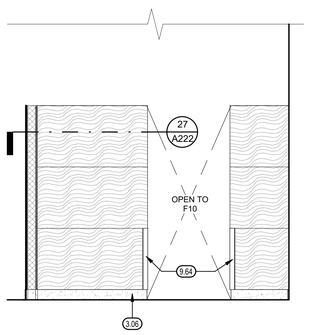

SOUTH WALL INSIDE

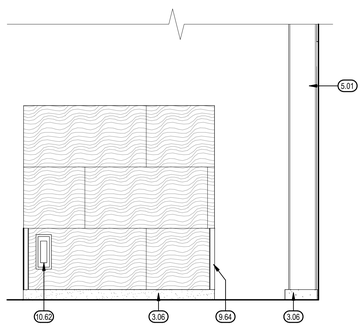

EAST WALL OUTER SIDE

F10A STORAGE - FREE STANDING WALLS

KEYNOTES (00.00)

3.06	8" HIGH CONCRETE CURB FACE TO MATCH SLAB w/ 3/8" RAD. COVE, TYP.
5.01	STRUCTURAL STEEL FRAMING, SEE STRUCTURAL
5.04	FLOOR SUPPORT BEAM (PAINT), SEE STRUCTURAL
5.06	STRUCTURAL STEEL COLUMN, TYP. SEE STRUCTURAL
6.41	FRP PANEL OVER PLYWOOD WALL FINISH
8.01	DOOR AND FRAME AS SCHEDULED (SIDE LITES WHERE INDICATED)
8.03	VERTICAL BI-FOLD STEEL DOORS WITH GLASS PANELS (FULLY TEMPERED)
8.13	OVERHEAD COILING SERVICE DOOR
8.23	ALUMINUM CURTAIN WALL WINDOWS & ENTRANCE DOORS, SEE SCHEDULES
9.64	4' STAINLESS STEEL CORNER GUARD
9.81	PAINT EXPOSED STEEL ROOF STRUCTURE, DECKING & UTILITIES ABOVE
9.82	SHEET METAL CLOSURE (PAINT), SEE DETAIL 29 / A850
10.01	HIGH PRESSURE LAMINATE MAGNETIC MARKER BOARDS
10.62	FIRE EXTINGUISHER CABINET AND FIRE EXTINGUISHER
22.04	EMERGENCY EYE WASH, SEE PLUMBING
23.09	AIR DUCT OPENING, SEE MECHANICAL
26.05	ELECTRICAL PANEL, SEE ELECTRICAL

LEGEND

GYPSUM BOARD (TEXTURE & PAINT)

GLAZING - AS SCHEDULED, SEE A701

3/4" PLYWOOD PANELING (U.N.O.)
SEE FASTENING DETAILS **2 / A850**,
3 / A850 - FINISH PER SCHEDULE

GENERAL NOTES

A. FOR ACCESSIBILE TOILET ROOM FIXTURE AND ACCESSORY MOUNTING HEIGHTS AND CLEARANCES, SEE **2 / A801**

B. FOR TOILET ROOM ELEVATIONS FOR BUILDINGS D AND F, REFER TO SHEET A224

C. SEE FINISH SCHEDULE FOR ROOMS NOT SHOWN IN INTERIOR ELEVATIONS.

D. ALL CABINETS ARE TO HAVE PLASTIC LAMINATE COUNTERS, SPLASHES & EXPOSED FACES, U.N.O. OVER MIN. 8 LAYER PLYWOOD

KEYPLAN

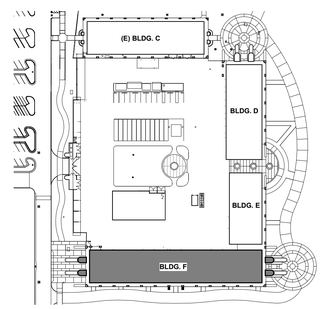

FOR BID ONLY

Teter, LLP expressly reserves its common law copyright and other property rights in these plans. This document, the ideas and designs incorporated herein, as an instrument of professional service, is not to be used in whole or in part, for any other project without prior written authorization.

MARK	DATE	DESCRIPTION
	11/1/2022	DSA RESUBMITTAL

LICENSED ARCHITECT ★ VINOD KUMAR GOMTER ★ No. C-23693 ★ STATE OF CALIFORNIA

TETER, LLP
ARCHITECTS ENGINEERS CONNECTED
FRESNO HEADQUARTERS
VISALIA I BAKERSFIELD I MODESTO I SAN LUIS OBISPO

TETER

TULARE CAMPUS CTE
COLLEGE OF THE SEQUOIAS
4999 E. BARDSLEY AVE.
TULARE, CA

DRAWING TITLE
INTERIOR ELEVATIONS

PROJECT NO.
21-12032

DRAWING
A922

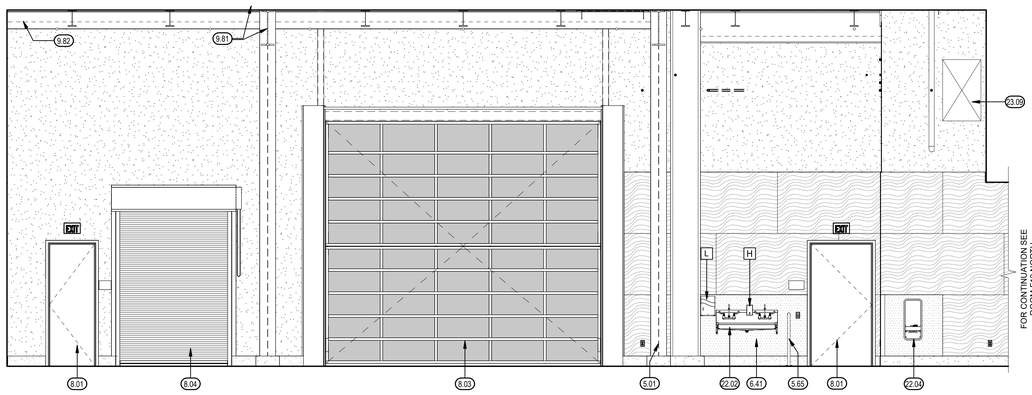

NORTH

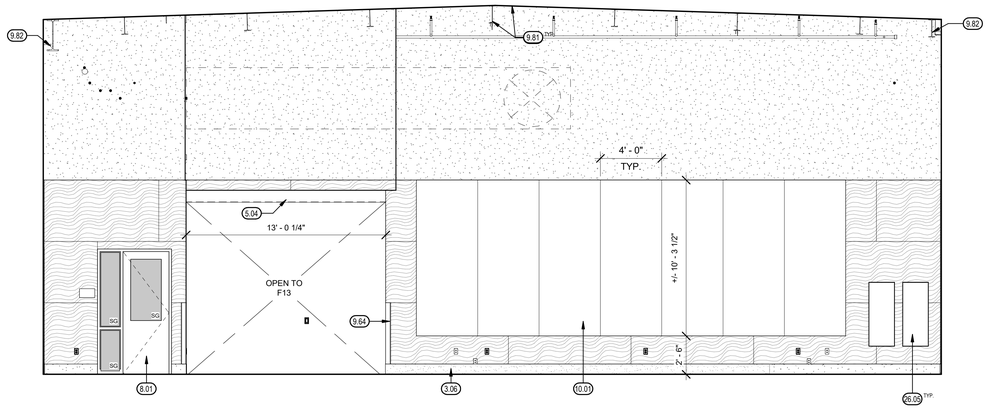

EAST

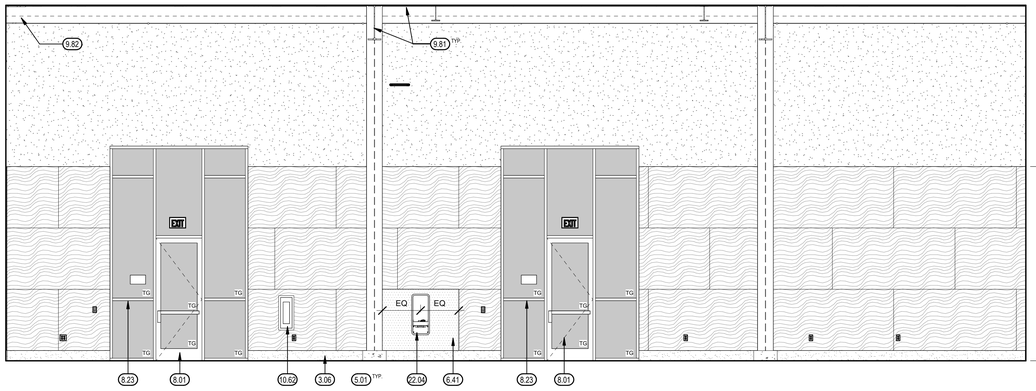

SOUTH

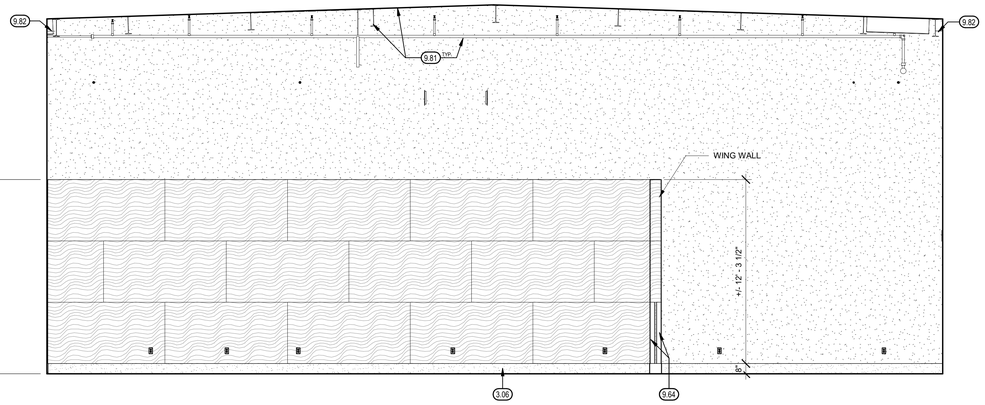

WEST

F10 ENVIROMENTAL CONTROLS

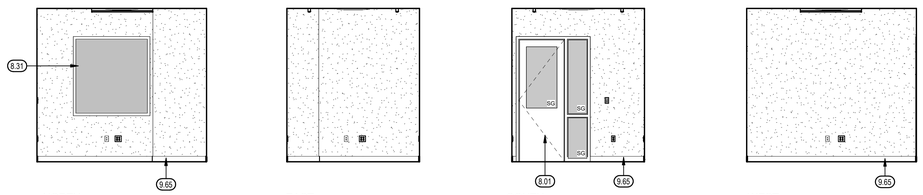

NORTH EAST SOUTH WEST

F11 OFFICE

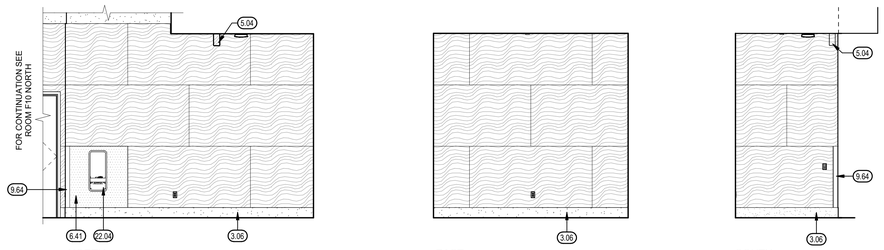

NORTH EAST SOUTH

F13 STORAGE

INTERIOR ELEVATIONS

1/4" = 1'-0" | 4

KEYNOTES (20.00)

3.06	8" HIGH CONCRETE CURB FACE TO MATCH SLAB w/ 3/8" RAD. COVE, TYP.
5.01	STRUCTURAL STEEL FRAMING, SEE STRUCTURAL
5.04	FLOOR SUPPORT BEAM (PAINT), SEE STRUCTURAL
5.65	PIPE GUARD AT DRINKING FOUNTAINS & WASH SINKS, SEE DETAIL **9 / A801**
6.41	FRP PANEL OVER PLYWOOD WALL FINISH
8.01	DOOR AND FRAME AS SCHEDULED (SIDE LITES WHERE INDICATED)
8.03	VERTICAL BI-FOLD STEEL DOORS WITH GLASS PANELS (FULLY TEMPERED)
8.04	OVERHEAD COILING DOOR & STEEL FRAME
8.23	ALUMINUM CURTAIN WALL WINDOWS & ENTRANCE DOORS, SEE SCHEDULES
8.31	WINDOW AS SCHEDULED
9.64	4" STAINLESS STEEL CORNER GUARD
9.65	4" RUBBER TOP SET BASE
9.81	PAINT EXPOSED STEEL ROOF STRUCTURE, DECKING & UTILITIES ABOVE
9.82	SHEET METAL CLOSURE (PAINT), SEE DETAIL 29 / A850
10.01	HIGH PRESSURE LAMINATE MAGNETIC MARKER BOARDS
10.62	FIRE EXTINGUISHER CABINET AND FIRE EXTINGUISHER
22.02	PLUMBING FIXTURE, SEE PLUMBING
22.04	EMERGENCY EYE WASH, SEE PLUMBING
23.09	AIR DUCT OPENING, SEE MECHANICAL
26.05	ELECTRICAL PANEL, SEE ELECTRICAL

LEGEND

GYPSUM BOARD (TEXTURE & PAINT)

GLAZING - AS SCHEDULED, SEE A701

3/4" PLYWOOD PANELING (U.N.O.) SEE FASTENING DETAILS **2 / A850**, **3 / A850** - FINISH PER SCHEDULE

TOILET ACCESSORY SCHEDULE

MARK	DESCRIPTION	MFR.	MODEL NO.	REMARKS
H	SOAP DISPENSER	BOBRICK	B-2111	SURFACE MTD.
L	PAPER TOWEL DISPENSER	BOBRICK	B-262	SURFACE MTD.

GENERAL NOTES

A. FOR ACCESSIBILE TOILET ROOM FIXTURE AND ACCESSORY MOUNTING HEIGHTS AND CLEARANCES, SEE **2 / A801**

B. FOR TOILET ROOM ELEVATIONS FOR BUILDINGS D AND F, REFER TO SHEET A224

C. SEE FINISH SCHEDULE FOR ROOMS NOT SHOWN IN INTERIOR ELEVATIONS.

D. ALL CABINETS ARE TO HAVE PLASTIC LAMINATE COUNTERS, SPLASHES & EXPOSED FACES, U.N.O. OVER MIN. 8 LAYER PLYWOOD

KEYPLAN

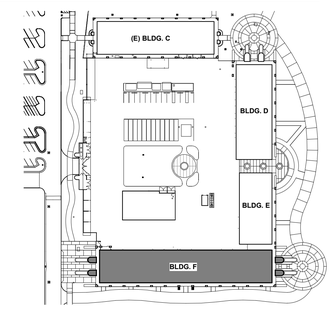

FOR BID ONLY

Teter, LLP expressly reserves its common law copyright and other property rights in these plans. This document, the ideas and designs incorporated herein, as an instrument of professional service, is not to be used in whole or in part, for any other project without prior written authorization.

MARK	DATE	DESCRIPTION
	11/1/2022	DSA RESUBMITTAL

TETER, LLP
FRESNO HEADQUARTERS
VISALIA | BAKERSFIELD | MODESTO | SAN LUIS OBISPO
ARCHITECTS ENGINEERS CONNECTED

TULARE CAMPUS CTE
COLLEGE OF THE SEQUOIAS
4999 E. BARDSLEY AVE.
TULARE, CA

DRAWING TITLE
INTERIOR ELEVATIONS

PROJECT NO.
21-12032

DRAWING
A923

\\tetr-file1\Users\ryan.odom\Documents\12032-A-COS Tulare CTE_ryan.odomNLB27.rvt
PLOT DATE: 11/1/2022 10:11:43 PM

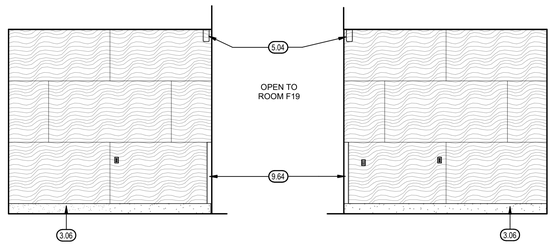

NORTH

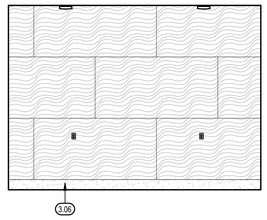

SOUTH

WEST

F16 STORAGE

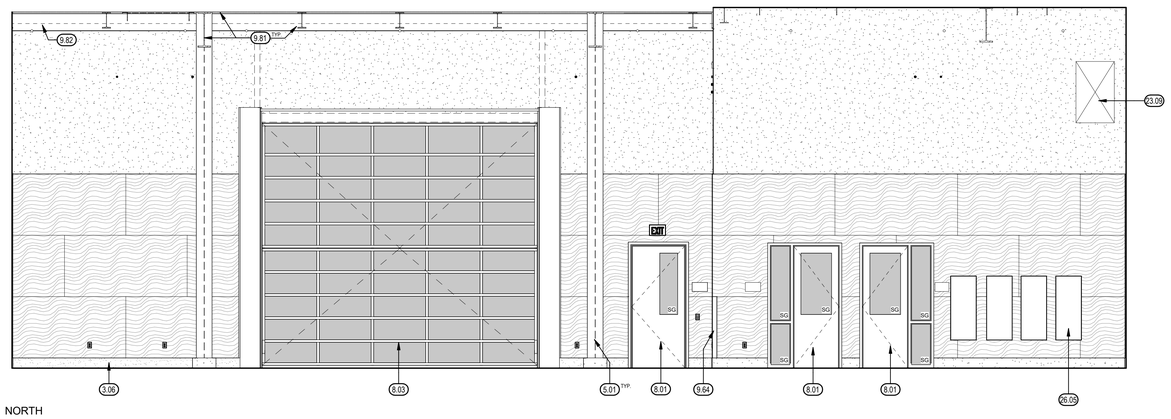

NORTH

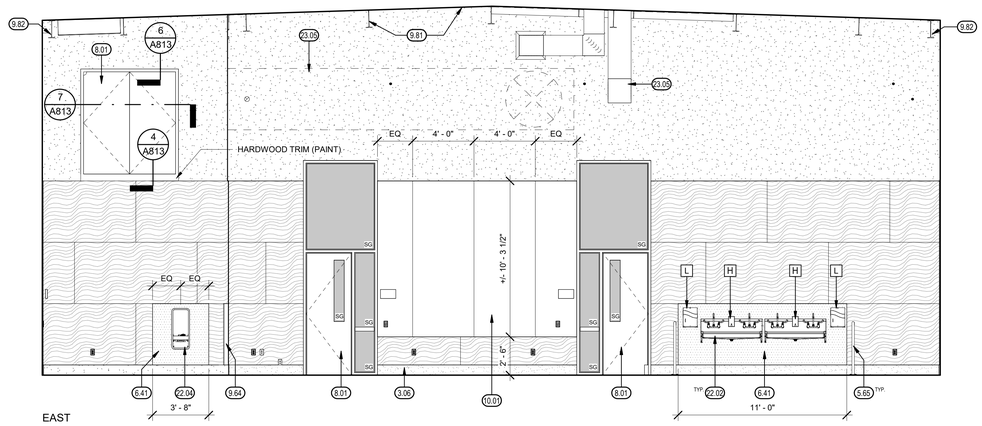

EAST

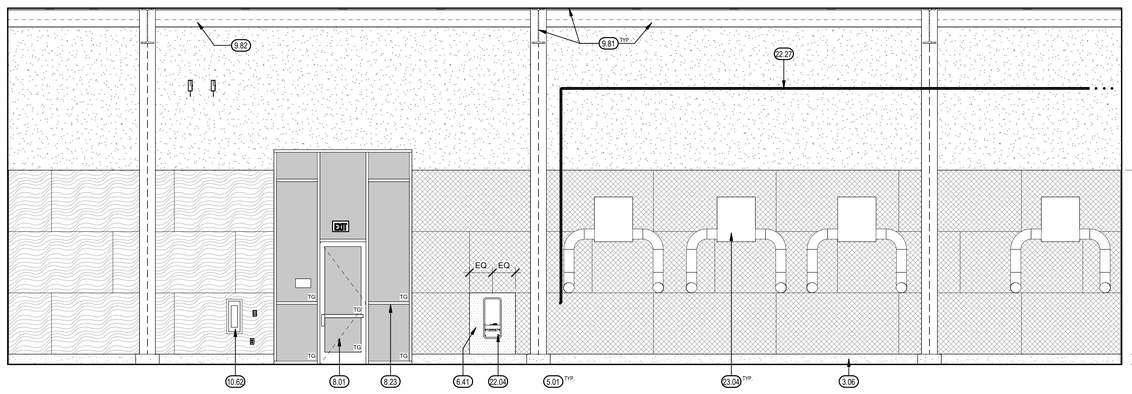

SOUTH

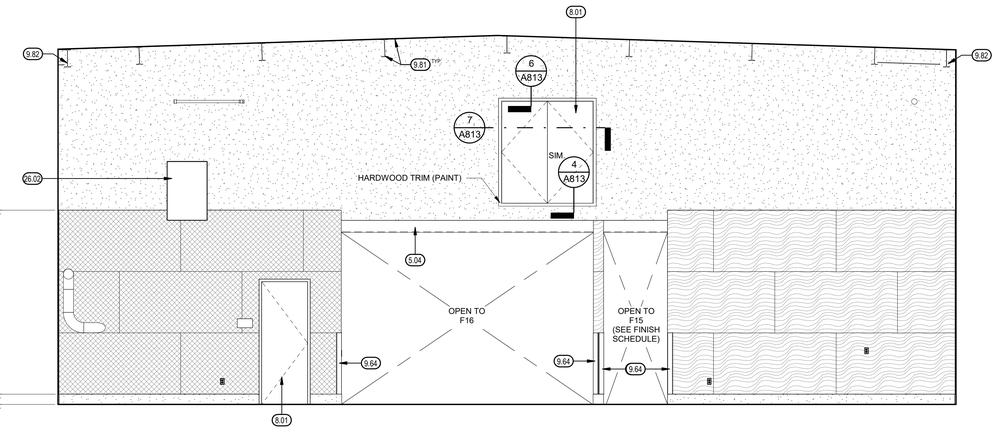

WEST

F19 INDUSTRIAL MAINTENANCE

3.06

INTERIOR ELEVATIONS

1/4" = 1'-0" | 4

KEYNOTES (XX.XX)

3.06	8" HIGH CONCRETE CURB FACE TO MATCH SLAB w/ 3/8" RAD. COVE, TYP.
5.01	STRUCTURAL STEEL FRAMING, SEE STRUCTURAL
5.04	FLOOR SUPPORT BEAM (PAINT), SEE STRUCTURAL
5.65	PIPE GUARD AT DRINKING FOUNTAINS & WASH SINKS, SEE DETAIL
6.41	FRP PANEL OVER PLYWOOD WALL FINISH
8.01	DOOR AND FRAME AS SCHEDULED (SIDE LITES WHERE INDICATED)
8.03	VERTICAL BI-FOLD STEEL DOORS WITH GLASS PANELS (FULLY TEMPERED)
8.23	ALUMINUM CURTAIN WALL WINDOWS & ENTRANCE DOORS, SEE SCHEDULES
9.64	4" STAINLESS STEEL CORNER GUARD
9.81	PAINT EXPOSED STEEL ROOF STRUCTURE, DECKING & UTILITIES ABOVE
9.82	SHEET METAL CLOSURE (PAINT), SEE DETAIL 29 / A850
10.01	HIGH PRESSURE LAMINATE MAGNETIC MARKER BOARDS
10.62	FIRE EXTINGUISHER CABINET AND FIRE EXTINGUISHER
22.02	PLUMBING FIXTURE, SEE PLUMBING
22.04	EMERGENCY EYE WASH, SEE PLUMBING
22.27	PLUMBING PIPE, SEE PLUMBING
23.04	MECHANICAL EQUIPMENT, SEE MECHANICAL
23.05	DUCT, SEE MECH. PAINT
23.09	AIR DUCT OPENING, SEE MECHANICAL
26.02	TRANSFORMER, SEE ELECTRICAL
26.05	ELECTRICAL PANEL, SEE ELECTRICAL

LEGEND

	GYPSUM BOARD (TEXTURE & PAINT)
	GLAZING - AS SCHEDULED, SEE A701
	3/4" PLYWOOD PANELING (U.N.O.) SEE FASTENING DETAILS **2 / A850**, **3 / A850** - FINISH PER SCHEDULE
	1/4" FIBER CEMENT PANELS OVER 5/8" GYP. BOARD WITH ALUMINUM T-TRIM (1/4" x 1/4" CENTER LEG AT HORIZONTAL JOINTS), 1/8" SPACE AT VERTICAL JOINTS, L-TRIM AT PERIMETER & #10 x 1 1/4" M.S. AT 16" o.c. EACH WAY SIM. TO **2 / A850** & **3 / A850**

TOILET ACCESSORY SCHEDULE

MARK	DESCRIPTION	MFR.	MODEL NO.	REMARKS
H	SOAP DISPENSER	BOBRICK	B-2111	SURFACE MTD.
L	PAPER TOWEL DISPENSER	BOBRICK	B-262	SURFACE MTD.

GENERAL NOTES

A. FOR ACCESSIBILE TOILET ROOM FIXTURE AND ACCESSORY MOUNTING HEIGHTS AND CLEARANCES, SEE **2 / A801**

B. FOR TOILET ROOM ELEVATIONS FOR BUILDINGS D AND F, REFER TO SHEET A224

C. SEE FINISH SCHEDULE FOR ROOMS NOT SHOWN IN INTERIOR ELEVATIONS.

D. ALL CABINETS ARE TO HAVE PLASTIC LAMINATE COUNTERS, SPLASHES & EXPOSED FACES, U.N.O. OVER MIN. 8 LAYER PLYWOOD

KEYPLAN

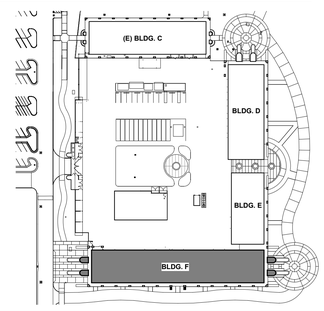

FOR BID ONLY

Teter, LLP expressly reserves its common law copyright and other property rights in these plans. This document, the ideas and designs incorporated herein, as an instrument of professional service, is not to be used in whole or part, for any other project without prior written authorization.

MARK	DATE	DESCRIPTION
	11/1/2022	DSA RESUBMITTAL

TETER, LLP
ARCHITECTS ENGINEERS CONNECTED
FRESNO HEADQUARTERS
VISALIA | BAKERSFIELD | MODESTO | SAN LUIS OBISPO

TULARE CAMPUS CTE
COLLEGE OF THE SEQUOIAS
4999 E. BARDSLEY AVE.
TULARE, CA

DRAWING TITLE
INTERIOR ELEVATIONS

PROJECT NO.
21-12032

DRAWING
A924

PLOT DATE: 11/1/2022 10:12:00 PM

\\tetr-file1\Users\ryan.odom\Documents\12032-A-COS Tulare CTE_ryan.odomNLB27.rvt

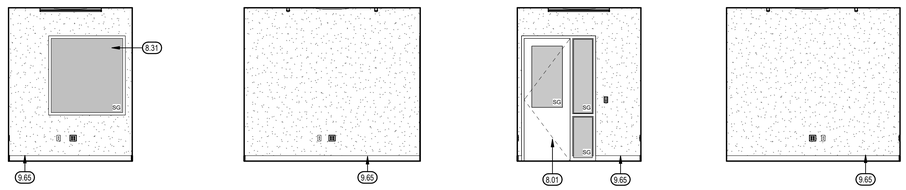

F20 OFFICE

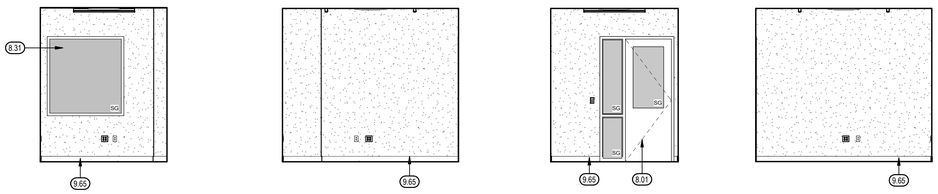

F21 OFFICE

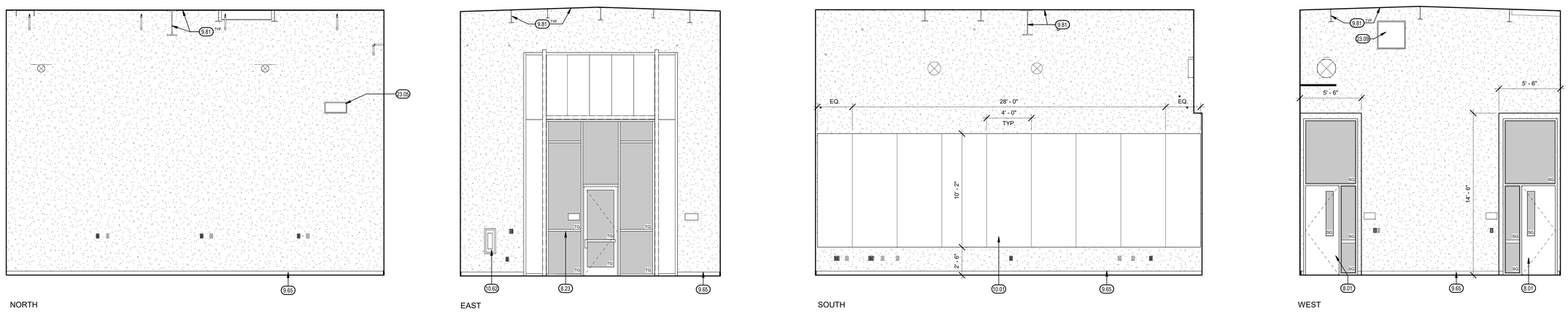

F26 CLASSROOM

INTERIOR ELEVATIONS

1/4" = 1'-0" | 10

KEYNOTES (x0.0x)

8.01	DOOR AND FRAME AS SCHEDULED (SIDE LITES WHERE INDICATED)
8.23	ALUMINUM CURTAIN WALL WINDOWS & ENTRANCE DOORS, SEE SCHEDULES
8.31	WINDOW AS SCHEDULED
9.65	4" RUBBER TOP SET BASE
9.81	PAINT EXPOSED STEEL ROOF STRUCTURE, DECKING & UTILITIES ABOVE
10.01	HIGH PRESSURE LAMINATE MAGNETIC MARKER BOARDS
10.62	FIRE EXTINGUISHER CABINET AND FIRE EXTINGUISHER
23.05	DUCT, SEE MECH, PAINT
23.09	AIR DUCT OPENING, SEE MECHANICAL

LEGEND

GYPSUM BOARD (TEXTURE & PAINT)

GLAZING - AS SCHEDULED, SEE A701

GENERAL NOTES

A. FOR ACCESSIBILE TOILET ROOM FIXTURE AND ACCESSORY MOUNTING HEIGHTS AND CLEARANCES, SEE **2 / A801**

B. FOR TOILET ROOM ELEVATIONS FOR BUILDINGS D AND F, REFER TO SHEET A224

C. SEE FINISH SCHEDULE FOR ROOMS NOT SHOWN IN INTERIOR ELEVATIONS.

D. ALL CABINETS ARE TO HAVE PLASTIC LAMINATE COUNTERS, SPLASHES & EXPOSED FACES, U.N.O. OVER MIN. 8 LAYER PLYWOOD

KEYPLAN

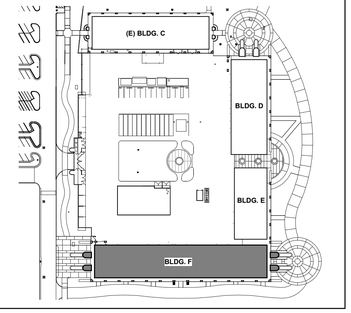

FOR BID ONLY

Teter, LLP expressly reserves its common law copyright and other property rights in these plans. This document, the ideas and designs incorporated herein, as an instrument of professional service, is not to be used in whole or part, for any other project without prior written authorization.

MARK	DATE	DESCRIPTION
	11/1/2022	DSA RESUBMITTAL

TETER, LLP
ARCHITECTS ENGINEERS CONNECTED
FRESNO HEADQUARTERS
VISALIA | BAKERSFIELD | MODESTO | SAN LUIS OBISPO

TETER

TULARE CAMPUS CTE
COLLEGE OF THE SEQUOIAS
4999 E. BARDSLEY AVE.
TULARE, CA

DRAWING TITLE
INTERIOR ELEVATIONS

PROJECT NO.
21-12032

DRAWING
A925

\\tetr-file1\Users\ryan.odom\Documents\12032-A-COS Tulare CTE_ryan.odomNLB27.rvt

PLOT DATE: 11/1/2022 10:12:20 PM

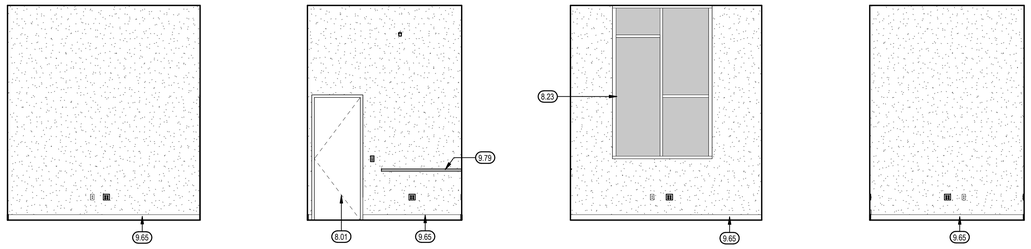

F27 DEANS OFFICE

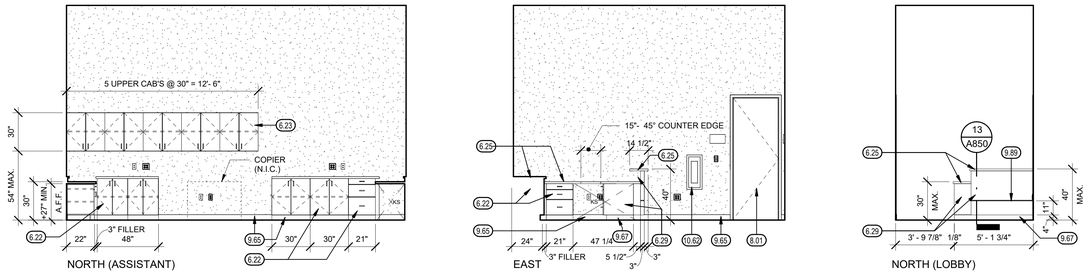

F28 ASSISTANT/PRINT/COPY

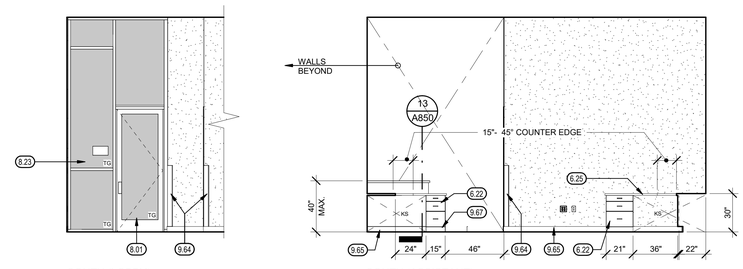

F28 ASSISTANT/PRINT/COPY

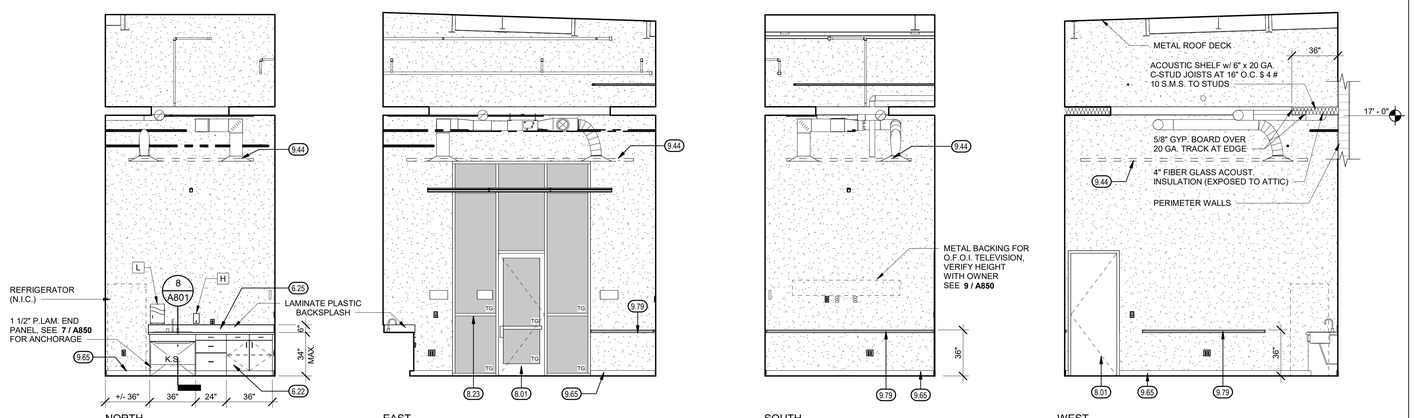

F29 MEETING

KEYNOTES ⟨X.XX⟩

6.22	PLASTIC LAMINATE BASE CABINET, SEE INTERIOR ELEVATIONS AND 7/A850 FOR ANCHORAGE
6.23	PLASTIC LAMINATE UPPER CABINET, SEE INTERIOR ELEVATIONS
6.25	PLASTIC LAMINATE ISLAND CABINET, SEE INTERIOR ELEVATIONS
6.29	PLASTIC LAMINATE EXPOSED END PANEL/FACE
8.01	DOOR AND FRAME AS SCHEDULED (SIDE LITES WHERE INDICATED)
8.23	ALUMINUM CURTAIN WALL WINDOWS & ENTRANCE DOORS, SEE SCHEDULES
9.44	FREE FLOATING SUSPENDED METAL PANEL CEILING, SEE SHEET A842
9.64	4" STAINLESS STEEL CORNER GUARD
9.65	4" RUBBER TOP SET BASE
9.67	STAINLESS STEEL BASE
9.79	CHAIR RAIL, TYP., SEE 10 / A850
9.89	1/2" STAINLESS STEEL REVEAL
10.62	FIRE EXTINGUISHER CABINET AND FIRE EXTINGUISHER

LEGEND

GYPSUM BOARD (TEXTURE & PAINT)

GLAZING - AS SCHEDULED, SEE A701

GENERAL NOTES

A. FOR ACCESSIBILE TOILET ROOM FIXTURE AND ACCESSORY MOUNTING HEIGHTS AND CLEARANCES, SEE **2 / A801**

B. FOR TOILET ROOM ELEVATIONS FOR BUILDINGS D AND F, REFER TO SHEET A224

C. SEE FINISH SCHEDULE FOR ROOMS NOT SHOWN IN INTERIOR ELEVATIONS.

D. ALL CABINETS ARE TO HAVE PLASTIC LAMINATE COUNTERS, SPLASHES & EXPOSED FACES, U.N.O. OVER MIN. 8 LAYER PLYWOOD

TOILET ACCESSORY SCHEDULE

MARK	DESCRIPTION	MFR.	MODEL NO.	REMARKS
H	SOAP DISPENSER	BOBRICK	B-2111	SURFACE MTD.
L	PAPER TOWEL DISPENSER	BOBRICK	B-262	SURFACE MTD.

KEYPLAN

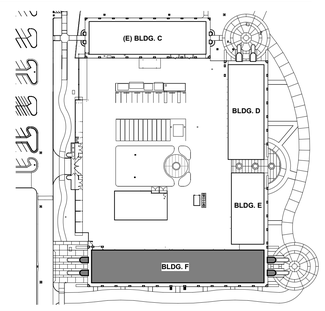

FOR BID ONLY

Teter, LLP expressly reserves its common law copyright and other property rights in these plans. This document, the ideas and designs incorporated herein, as an instrument of professional service, is not to be used in whole or part, for any other project without prior written authorization.

MARK	DATE	DESCRIPTION
	11/1/2022	DSA RESUBMITTAL

TETER, LLP
ARCHITECTS ENGINEERS CONSULTANTS
FRESNO HEADQUARTERS
VISALIA I BAKERSFIELD I MODESTO I SAN LUIS OBISPO

TULARE CAMPUS CTE
COLLEGE OF THE SEQUOIAS
4999 E. BARDSLEY AVE.
TULARE, CA

DRAWING TITLE
INTERIOR ELEVATIONS

PROJECT NO.
21-12032

DRAWING
A926

\\tetr-file1\Users\ryan.odom\Documents\12032-A-COS Tulare CTE_ryan.odomNLB27.rvt
PLOT DATE: 11/1/2022 10:12:43 PM

\\tet-file-01\Users\luis.valtierra\Documents\12032-S-COS Tulare CTE_luis.valtierra.rvt

GENERAL STRUCTURAL

1. ALL WORK SHALL BE PERFORMED IN ACCORDANCE WITH APPLICABLE SECTIONS OF THE **CALIFORNIA BUILDING CODE (CBC 2019)** EDITION; AND ALL OTHER PUBLICATIONS AND STANDARDS LISTED HEREIN. WHERE REFERENCE IS MADE TO VARIOUS TEST STANDARDS FOR MATERIALS, SUCH STANDARDS SHALL BE THE LATEST EDITION AND/OR ADDENDUM.
2. CONTRACTOR SHALL READ AND FOLLOW ALL REFERENCED ICC-ES REPORTS OR IAPMO-ES REPORTS FOR INSTALLATION OF ITEMS SHOWN. ALTERNATE METHODS OF CONSTRUCTION MAY BE SUBMITTED FOR APPROVAL TO THE PROJECT COORDINATOR WITH APPLICABLE ICC-ES OR IAPMO-ES REPORTS.
3. THE CONTRACTOR SHALL BE RESPONSIBLE FOR COORDINATING THE WORK OF ALL TRADES AND SHALL VERIFY ALL DIMENSIONS, CONDITIONS, AND ELEVATIONS BEFORE STARTING WORK OR FABRICATION ON NEW (N) OR EXISTING (E) CONSTRUCTION. ANY DISCREPANCIES FOUND AMONG THE DRAWINGS, SPECIFICATIONS, GENERAL NOTES, AND THE SITE CONDITIONS SHALL BE IMMEDIATELY CALLED TO THE ATTENTION OF THE ENGINEER OF RECORD AND SHALL BE RESOLVED IN WRITING BEFORE PROCEEDING. ANY WORK PERFORMED BY THE CONTRACTOR AFTER DISCOVERY OF SUCH DISCREPANCY SHALL BE PERFORMED AT THE GENERAL CONTRACTOR'S RISK. ALL WORK SHALL BE PERFORMED IN A WORKMAN LIKE MANNER IN ACCORDANCE WITH ACCEPTED CONSTRUCTION PRACTICES.
4. PROJECTS WITH EXISTING STRUCTURES, ALL WORK SHALL BE PERFORMED SO AS TO MINIMIZE DAMAGE TO THE EXISTING STRUCTURE AND FINISHES.
5. ALL WORK SHALL CONFORM TO THE LATEST APPLICABLE CONSTRUCTION SAFETY REQUIREMENTS OF O.S.H.A. AND ANY OTHER GOVERNMENTAL AGENCY HAVING JURISDICTION IN THE AREA OF THE WORK.
6. THE CONTRACTOR SHALL USE ADEQUATE NUMBERS OF SKILLED WORKMAN WHO ARE THOROUGHLY TRAINED AND EXPERIENCED IN THE NECESSARY CRAFTS AND WHO ARE COMPLETELY FAMILIAR WITH THE SPECIFIED REQUIREMENTS AND METHODS NEEDED FOR PROPER PERFORMANCE OF THE WORK.
7. THE ENGINEER OF RECORD IS NOT RESPONSIBLE FOR, AND DOES NOT HAVE CONTROL OF, CONSTRUCTION MEANS, METHODS, TECHNIQUES, SEQUENCES, AND PROCEDURES FOR JOB SITE CONDITIONS, FOR SAFETY PRECAUTIONS AND PROGRAMS IN CONNECTION WITH THE CONSTRUCTION WORK. CONTRACTOR WILL BE REQUIRED TO ASSUME SOLE AND COMPLETE RESPONSIBILITY FOR JOB SITE CONDITIONS DURING THE COURSE OF CONSTRUCTION OF THE PROJECT, INCLUDING THE SAFETY OF ALL PERSONS AND PROPERTY. THIS REQUIREMENT SHALL BE MADE TO APPLY CONTINUOUSLY AND NOT BE LIMITED TO NORMAL WORKING HOURS. THE ENGINEER OF RECORD IS NOT RESPONSIBLE FOR THE CONTRACTOR'S FAILURE TO CARRY OUT THE CONSTRUCTION WORK IN ACCORDANCE WITH THE CONTRACT DOCUMENTS. THE ENGINEER OF RECORD IS NOT RESPONSIBLE FOR, AND DOES NOT HAVE CONTROL OR CHARGE OF ACTS OR OMISSIONS OF THE CONTRACTOR, SUBCONTRACTORS, OR ANY OF THEIR AGENTS OR EMPLOYEES, OR ANY OTHER PERSONS PERFORMING ANY OF THE CONSTRUCTION WORK. THE CONTRACTOR AGREES TO INDEMNIFY AND HOLD DESIGN PROFESSIONAL HARMLESS FROM ANY AND ALL LIABILITY, REAL OR ALLEGED, IN CONNECTION WITH THE PERFORMANCE OF WORK ON THIS PROJECT.
8. THE STRUCTURAL SYSTEMS HAVE BEEN DESIGNED TO RESIST CODE REQUIRED VERTICAL AND LATERAL FORCES AFTER THE CONSTRUCTION OF STRUCTURAL ELEMENTS HAS BEEN COMPLETED. AS PRESCRIBED BY THE GOVERNING BUILDING CODES AND IN ACCORDANCE WITH STANDARD ENGINEERING PRACTICES. NO SPECIAL PROVISIONS HAVE BEEN MADE FOR CARRYING CONCENTRATED LOADS FROM STORAGE AND HANDLING OF CONSTRUCTION MATERIALS OR FROM OPERATION OF CONSTRUCTION EQUIPMENT. THE CONTRACTOR SHALL BE RESPONSIBLE TO PROVIDE ALL MEASURES NECESSARY TO PROTECT THE STRUCTURE DURING CONSTRUCTION. SUCH MEASURES SHALL INCLUDE, BUT NOT BE LIMITED TO JOB SITE SAFETY; ERECTION MEANS, METHODS AND SEQUENCES; TEMPORARY SHORING; FORMWORK AND BRACING; USE OF EQUIPMENT, AND CONSTRUCTION PROCEDURES. PROVIDE ADEQUATE RESISTANCE TO LOADS ON THE STRUCTURES DURING CONSTRUCTION PER **DESIGN LOADS ON STRUCTURES DURING CONSTRUCTION (SEI/ASCE 37-14)**.
9. STRUCTURAL OBSERVATION BY THE ENGINEER OF RECORD DOES NOT RELIEVE THE CONTRACTOR OF HIS OR HER RESPONSIBILITY FOR BUILDING THE PROJECT, CONTROLLING THE PROGRESS, PROVIDING SAFE WORKING CONDITIONS, AND CORRECTING ANY DEVIATIONS FROM PROJECT REQUIREMENTS. SUCH OBSERVATIONS ARE NOT TO BE CONSTRUED AS INSPECTION OF THE WORK. RESPONSIBILITY FOR RESOLUTION OF ANY ITEMS NOTED DURING OBSERVATION AS NOT BEING IN CONFORMANCE WITH THE CONTRACT DOCUMENTS RESTS WITH THE CONTRACTOR, SUBJECT TO REVIEW AND APPROVAL BY THE ENGINEER OF RECORD.
10. THE DETAILS ON THESE DRAWINGS SHALL APPLY IN ALL CASES UNLESS SPECIFICALLY SHOWN OTHERWISE. WHERE CONDITIONS ARE NOT SPECIFICALLY INDICATED, DETAILS OF A CHARACTER SIMILAR TO THOSE SHOWN SHALL BE USED, SUBJECT TO REVIEW BY THE ENGINEER OF RECORD.
11. THE TYPICAL DETAILS SHOWN ON THE TYPICAL DETAIL SHEETS SHALL APPLY IN ALL CASES UNLESS SPECIFICALLY SHOWN OTHERWISE. WHERE NO DETAIL IS SHOWN, CONSTRUCTION SHALL BE AS SHOWN FOR SIMILAR WORK.
12. NOTES AND DETAILS ON DRAWINGS SHALL TAKE PRECEDENCE OVER THESE GENERAL NOTES.
13. OPENINGS, POCKETS, ETC., SHALL NOT BE PLACED IN SLABS, PILASTERS, OR WALLS UNLESS DETAILED ON THE STRUCTURAL DRAWINGS. FOR OPENINGS NOT SHOWN AND/OR DETAILED ON THE STRUCTURAL DRAWINGS AND WHICH PENETRATE STRUCTURAL ELEMENTS, OBTAIN APPROVAL FROM THE ENGINEER OF RECORD BEFORE PROCEEDING WITH WORK.
14. IT IS THE INTENTION OF THESE DRAWINGS TO PROVIDE FOR THE FOLLOWING CONTINUITIES:
    - ALL ROOF AND FLOOR STRUTS SHALL BE CONTINUOUSLY CONNECTED FOR THE LENGTH OF THE ROOF OR FLOOR SYSTEM.
    - ALL WALL BRACING AND/OR SHEAR PANELS SHALL BE CONNECTED TO THE ROOF AND/OR FLOOR STRUTS.

    IF THE DETAILS WHICH REFLECT THESE CONTINUITIES ARE NOT EVIDENT ON THE DRAWINGS, THE CONTRACTOR SHALL CONTACT THE ENGINEER OF RECORD FOR CLARIFICATION.
15. FRAME OPENINGS AND SUPPORT MISCELLANEOUS EQUIPMENT AS DETAILED ON THE DRAWINGS. WHERE NO DETAILS ARE PROVIDED, OBTAIN APPROVAL FROM THE ENGINEER OF RECORD BEFORE PROCEEDING WITH WORK.
16. ALL EQUIPMENT, MACHINERY, TANKS AND SILOS SHALL BE PLUMB AND LEVEL UNLESS NOTED OTHERWISE.
17. ALL EXTERIOR GLAZING AND FRAMES SHALL BE DESIGNED TO RESIST THE WIND LOADS PRESENTED IN THE "BASIS OF DESIGN" SPECIFICATION.
18. LATERALLY BRACE ALL SUSPENDED EQUIPMENT AND CEILINGS IN CONFORMANCE WITH THE BUILDING CODE.
19. IT IS THE INTENT OF THESE PLANS TO PROVIDE DETAILS OF CONSTRUCTION NECESSARY TO GUIDE THE GENERAL CONTRACTOR WITH STRUCTURAL ASPECTS OF THE PROJECT ONLY. ARCHITECTURAL FEATURES SHALL BE COORDINATED WITH THE OWNER.
20. THE STRUCTURAL DRAWINGS SHALL BE USED IN CONJUNCTION WITH ARCHITECTURAL DRAWINGS. PRIMARY STRUCTURAL ELEMENTS ARE DIMENSIONED ON STRUCTURAL PLANS AND DETAILS AND OVERALL LAYOUT OF STRUCTURAL PORTION OF WORK. SOME SECONDARY ELEMENTS ARE NOT DIMENSIONED SUCH AS WALL CONFIGURATIONS, INCLUDING EXACT DOOR AND WINDOW LOCATIONS, ALCOVES, SLAB SLOPES AND DEPRESSIONS, CURBS, ETC. VERTICAL DIMENSIONAL CONTROL IS DEFINED BY ARCHITECTURAL WALL SECTIONS AND BUILDING SECTIONS. STRUCTURAL DETAILS SHOW DIMENSIONAL RELATIONSHIPS TO CONTROL DIMENSION DEFINED BY ARCHITECTURAL DRAWINGS. DETAILING AND SHOP DRAWING PRODUCTION FOR STRUCTURAL ELEMENTS WILL REQUIRE DIMENSIONAL INFORMATION CONTAINED IN BOTH ARCHITECTURAL AND STRUCTURAL DRAWINGS.
21. SEE ALSO PROJECT MANUAL.

BASIS OF DESIGN

1. CODE: ASCE 7-16 AND CBC 2019
2. DESIGN LOADS:
   ROOF DEAD LOAD----------SEE PLANS
   ROOF LIVE LOAD----------SEE PLANS
   (ROOF LIVE LOAD MAY BE REDUCED PER CBC SECTION 1607A.12

   FLOOD HAZARD----------N/A

   EXTERIOR WALL----------24.0 PSF
   INTERIOR WALL----------16.5 PSF
3. SEISMIC FACTORS:
   RISK CATEGORY----------III
   IMPORTANCE FACTOR----------1.25
   Ss----------0.582
   S1----------0.228
   SITE CLASS----------D
   SDS----------0.518
   SD1----------0.326
   SEISMIC DESIGN CATEGORY----------D
   SEISMIC RESPONSE COEFFICIENT(S), Cs----------0.081
   RESPONSE MODIFICATION FACTOR(S), R----------8
   SEISMIC FORCE RESISTING SYSTEM(S)----------SPECIAL STEEL MOMENT FRAMES

   BUILDING D:
   DESIGN BASE SHEAR (EAST-WEST)----------51.643 KIPS
   DESIGN BASE SHEAR (NORTH-SOUTH)----------51.643 KIPS

   BUILDING E:
   DESIGN BASE SHEAR (EAST-WEST)----------32.661 KIPS
   DESIGN BASE SHEAR (NORTH-SOUTH)----------32.661 KIPS

   BUILDING F:
   DESIGN BASE SHEAR (EAST-WEST)----------86.585 KIPS
   DESIGN BASE SHEAR (NORTH-SOUTH)----------86.585 KIPS

   SYSTEM OVERSTRENGTH FACTOR, Ω----------2.5
   DEFLECTION AMP. FACTOR, Cd----------5.5
   REDUNDANCY FACTOR, ρ----------1.0
   ANALYSIS PROCEDURE USED----------EQUIVALENT LATERAL FORCE METHOD

   HORIZONTAL STRUCTURAL IRREGULARITIES----N/A
   VERTICAL STRUCTURAL IRREGULARITIES----------N/A
   LOCATION OF BASE----------TOP OF FOOTING
4. WIND FACTORS:
   RISK CATEGORY----------III
   ULTIMATE DESIGN WIND SPEED----------101 MPH
   WIND EXPOSURE----------C
   INTERNAL PRESSURE COEFFICIENT----------+/- 0.18

   FOR WIND UPLIFT MAP SEE----------S3X1 SERIES SHEETS

   BUILDING D:
   DESIGN BASE SHEAR (EAST-WEST)----------82.845 KIPS
   DESIGN BASE SHEAR (NORTH-SOUTH)----------43.077 KIPS

   BUILDING E:
   DESIGN BASE SHEAR (EAST-WEST)----------66.077 KIPS
   DESIGN BASE SHEAR (NORTH-SOUTH)----------34.361 KIPS

   BUILDING F:
   DESIGN BASE SHEAR (EAST-WEST)----------36.213 KIPS
   DESIGN BASE SHEAR (NORTH-SOUTH)----------228.112 KIPS
5. THE SCOPE OF THIS PROJECT IS TO PROVIDE AN EXISTING SCHOOL CAMPUS WITH THE ADDITION OF (3) NEW CLASSROOM BUILDINGS. ALL BUILDINGS TO BE CONSTRUCTED WITH METAL DECK DIAPHRAGM OVER STRUCTURAL STEEL ROOF FRAMING AND STRUCTURAL STEEL COLUMNS SUPPORTED ON CONCRETE CONTINUOUS AND SPREAD FOOTINGS. THE TYPICAL WALL FRAMING (EXTERIOR AND INTERIOR) IS METAL STUD FRAMING. THE INTERIOR MECHANICAL UNIT PLATFORMS CONSIST OF A PLYWOOD DIAPHRAGM SUPPORTED BY METAL JOIST FRAMING AND SUREBOARD SHEAR WALL AS THE LATERAL FORCE RESISTING SYSTEM. THE MAIN BUILDING LATERAL FORCE RESISTING SYSTEM CONSISTS OF METAL DECK DIAPHRAGMS AND SPECIAL MOMENT FRAMES. MISCELLANEOUS SITE STRUCTURES ARE ALSO INCLUDED:
   5.1 AT THE DRIVE ENTRANCE, CMU SITE WALL AND STRUCTURAL STEEL CONOPY WITH EXPOSED METAL DECK OVER HSS BEAMS SUPPORTED ON CANTILEVERED HSS COLUMNS WITH CONCRETE FOOTINGS.
   5.2 AT THE EAST SIDE OF BUILDINGS D & E, FREE STANDING CURVED WALL ELEMENT CONSTRUCTED OF CANTILEVERED STRUCTURAL STEEL HSS COLUMNS SUPPORTING HSS BEAMS AND COLD FORMED STUD FRAMING.

BUILDING FOUNDATION AND PREPARATION

1. THE FOUNDATION DESIGN IS IN ACCORDANCE WITH THE RECOMMENDATIONS CONTAINED WITHIN THE GEOTECHNICAL ENGINEERING INVESTIGATION REPORT PREPARED BY **BSK ASSOCIATES** REPORT NO. **G21-396-11F**, DATED **JANUARY 31, 2022**.
2. THE SOIL PARAMETERS ARE AS FOLLOWS:
   A. SOIL CLASSIFICATION: LOOSE TO MEDIUM SILTY SAND.
      a. ALLOWABLE DESIGN PARAMETERS:

PARAMETER	ALLOWABLE CAPACITY
DEAD + LIVE (CONTINUOUS)	**3500** PSF
DEAD + LIVE (SPREAD)	**4000** PSF
SEISMIC / WIND	1/3RD INCREASE
ACTIVE PRESSURE (DRAINED)	**37** PSF
AT REST PRESSURE (DRAINED)	**57** PSF
PASSIVE PRESSURE (DRAINED)	**424** PSF*
COEFFICIENT OF FRICTION	**0.47***
SUBGRADE MODULUS	**150** PCI

      * APPLY FACTOR OF SAFETY (FS) AS FOLLOWS:
      FS = **1.5** FOR PASSIVE OR FRICTION ONLY
      FS = **2.0** FOR PASSIVE AND FRICTION IN COMBINATION
      FS = **1.2** FOR SEISMIC LOADING
3. FOR OVEREXCAVATION AND COMPACTION INFORMATION, SEE (11/S002)
4. CONTRACTOR SHALL REVIEW AND INCORPORATE ALL RECOMMENDATIONS OF SOILS ENGINEER OF RECORD IN THEIR GEOTECHNICAL ENGINEERING INVESTIGATION INDICATED IN NOTE #1 ABOVE.
5. A REPRESENTATIVE OF THE SOILS ENGINEER OF RECORD SHALL BE PRESENT DURING ALL SITE CLEARING AND GRADING OPERATIONS TO TEST AND OBSERVE EARTHWORK CONSTRUCTION.
6. THE CONTRACTOR SHALL BE RESPONSIBLE FOR ALL EXCAVATION PROCEDURES AND FOR PROTECTION OF ADJACENT PROPERTY, STRUCTURES, STREETS, AND UTILITIES.
7. DO NOT BACKFILL AROUND THE EXTERIOR PERIMETER WALL UNTIL AFTER THE WALLS ARE SUPPORTED BY THE COMPLETION OF INTERIOR FLOOR SYSTEMS. DO NOT BACKFILL UNTIL 7 DAYS MINIMUM AFTER COMPLETION OF THE FLOOR SLABS.
8. IT SHALL BE THE CONTRACTOR'S RESPONSIBILITY TO DESIGN AND PROVIDE ADEQUATE SHORING, BRACING AND FORM WORK AS REQUIRED FOR THE CONSTRUCTION OF THE BUILDING. PROVIDE TEMPORARY BRACING AS REQUIRED TO HOLD THE VARIOUS ELEMENTS IN PLACE UNTIL FINAL SUPPORT IS SECURELY ANCHORED.
9. CONTRACTOR SHALL EXERCISE EXTREME CARE DURING EXCAVATION TO AVOID DAMAGE TO BURIED LINES, TANKS, AND OTHER CONCEALED ITEMS. UPON DISCOVERY, DO NOT PROCEED WITH WORK UNTIL RECEIVING WRITTEN INSTRUCTIONS FROM ARCHITECT.
10. PRIOR TO PLACEMENT OF REINFORCING STEEL, A REPRESENTATIVE OF THE SOILS ENGINEER OF RECORD SHALL INSPECT ALL FOOTING EXCAVATIONS FOR SUITABILITY OF BEARING SURFACES.
11. PROVIDE DRAINAGE AND DEWATERING AROUND ALL WORK TO AVOID WATER-SOFTENED FOOTINGS.

CONCRETE MIX, PLACEMENT, AND FINISH

1. THE QUALITY AND DESIGN OF CONCRETE SHALL BE IN ACCORDANCE WITH THE **CALIFORNIA BUILDING CODE (CBC 2019)** EXCEPT ITEMS NOT SPECIFICALLY COVERED THEREIN SHALL ALSO CONFORM TO **BUILDING CODE REQUIREMENTS FOR STRUCTURAL CONCRETE (ACI 318-14)**.
2. CEMENT SHALL BE **TYPE II (NON-CORROSIVE SOILS)** AND SHALL MEET THE REQUIREMENTS SET FORTH IN THE TABLE BELOW:

USE/LOCATION	f'c (psi)	SLUMP (in.)	w/c RATIO	MAX. AGG. SIZE
FOUNDATION	3,000	4	0.53	1 1/2" H.R.
FOUNDATION WALL	3,000	4	0.53	1 1/2" H.R.
SLAB-ON-GRADE	4,000	4	0.45 - 0.50	1" H.R.

   NOTES:
   AGGREGATE SPECIFICATION SHALL BE AS FOLLOWS;
   1. ASTM C33 FOR HARD ROCK (H.R.) AGGREGATE (145pcf)
   2. GAP-GRADED MIX IS NOT PERMITTED FOR SLAB ON GRADE, COMPLY WITH GUIDE FOR CONCRETE FLOOR AND SLAB CONSTRUCTION (ACI 302.1R-15)

   ULTIMATE COMPRESSIVE STRENGTH (f'c) SHOWN BASED ON 28 DAY STRENGTH.
3. THE CONTRACTOR SHALL DESIGN CONCRETE MIXES THAT MEET OR EXCEED THE REQUIREMENTS OF THE CONCRETE MIX TABLE. THE MIX DESIGNS SHALL FACILITATE ANTICIPATED PLACEMENT METHODS, WEATHER, REBAR CONGESTION, ARCHITECTURAL FINISHES, CONSTRUCTION SEQUENCING, STRUCTURAL DETAILS, AND ALL OTHER FACTOR REQUIRED TO PROVIDE A STRUCTURALLY SOUND, AESTHETICALLY ACCEPTABLE FINISHED PRODUCT. WATER REDUCING ADMIXTURES WILL LIKELY BE REQUIRED TO MEET THESE REQUIREMENTS. CONCRETE MIX DESIGNS SHALL CLEARLY INDICATE THE TARGET SLUMP, SLUMP TOLERANCE SHALL BE +/- 1 1/2 INCHES.
4. TOTAL CEMENTITIOUS MATERIAL SHALL BE THE SUM OF ALL CEMENT PLUS FLYASH. AT THE CONTRACTORS OPTION, FLYASH MAY BE SUBSTITUTED FOR CEMENT BUT SHALL NOT EXCEED 15% FOR DSA BY WEIGHT OF TOTAL CEMENTITIOUS MATERIAL. MIXES SHALL NOT CONTAIN LESS THAN 5 1/2 SACKS OF CEMENTITIOUS MATERIAL PER CUBIC YARD, UNLESS NOTED OTHERWISE.
5. FLYASH SHALL CONFORM TO **ASTM C618 CLASS F**. MAXIMUM LOSS OF IGNITION SHALL BE 1.0%
6. ADMIXTURES SHALL BE BY MASTER BUILDERS, W.R.GRACE, OR PRE-APPROVED EQUAL. ALL MANUFACTURERS RECOMMENDATIONS SHALL BE FOLLOWED. NO ADMIXTURES SHALL BE ADDED TO THE MIX DESIGN WITHOUT PRIOR APPROVAL OF THE STRUCTURAL ENGINEER.
7. PLACE CONCRETE FOLLOWING ALL APPLICABLE ACI RECOMMENDATIONS. CONCRETE SHALL BE PROPERLY CONSOLIDATED PER **GUIDE FOR CONSOLIDATION OF CONCRETE (ACI 309R-05)** USING INTERIOR MECHANICAL VIBRATORS, DO NOT OVER VIBRATE. CONCRETE SHALL BE POURED MONOLITHICALLY BETWEEN CONSTRUCTION OR EXPANSION JOINTS. IF CONCRETE IS PLACED BY THE PUMP METHOD, HORSEHIDE SHALL BE PROVIDED TO SUPPORT THE HOSE, THE HOSE SHALL NOT BE ALLOWED TO RIDE ON THE REINFORCING. WEATHER FORECASTS SHALL BE MONITORED AND ACI RECOMMENDATIONS FOR HOT AND COLD WEATHER CONCRETING SHALL BE FOLLOWED AS REQUIRED. CONCRETE SHALL NOT FREE FALL MORE THAN 5 FEET DURING PLACEMENT WITHOUT WRITTEN APPROVAL OF STRUCTURAL ENGINEER.
8. ALL MOLDS, ORNAMENTS, GROOVES, ETC., SHOWN ON DRAWINGS SHALL BE PROVIDED FOR IN THE FORM WORK BEFORE CONCRETE IS POURED.
9. REFER TO ARCHITECTURAL, MECHANICAL, AND/OR PLUMBING DRAWINGS FOR LOCATION AND SPACING OF ALL PLUMBING FIXTURES.
10. NO PIPES OR DUCTS SHALL BE PLACED IN CONCRETE FOOTINGS UNLESS SPECIFICALLY DETAILED.
11. CONSTRUCTION JOINTS NOT INDICATED ON THE DRAWINGS SHALL BE MADE AND LOCATED AS NOT TO IMPAIR THE STRENGTH OF THE STRUCTURE. PROVISION SHALL BE MADE FOR TRANSFER OF SHEAR AND OTHER FORCES THROUGH THE JOINTS.
12. CONTROL JOINTS (C.J.) SHALL BE LOCATED PER PLAN FOR PROPER SHRINKAGE CONTROL. JOINT SPACING SHALL BE ON A MAXIMUM 10' SPACING EACH WAY (100 SQ. FT.). WHERE POSSIBLE, CONTROL JOINTS ARE TO BE LOCATED AT INTERIOR NON-BEARING PARTITIONS AND AT HIGH OR LOW POINTS OF FLOOR SLOPES. SOFT CUTS FOR THE CONTROL JOINTS SHALL BE MADE IN THE SLAB NO LATER THAN 8 HOURS AFTER PLACEMENT.
13. ALL CONCRETE SHALL BE FINISHED PER THE PROJECT MANUAL.
14. ALL CONCRETE SHALL BE CURED PER THE PROJECT MANUAL.
15. NON-SHRINK GROUT SHALL BE MASTER BUILDERS "MASTERFLOW 555" OR PRE-APPROVED EQUAL. GROUT SHALL CONFORM TO **ASTM C1107 GRADE B** WHEN TESTED AT A FLUID CONSISTENCY FOR 30 MINUTES. GROUT MAY BE PLACED FROM A 25 SECOND FLOW TO A STIFF PACKING CONSISTENCY. FILL OR PACK ENTIRE SPACE UNDER PLATES OR SHAPES. FOLLOW MANUFACTURERS RECOMMENDATIONS FOR PREPARATION, INSTALLATION, AND CURING.

CONCRETE REINFORCING AND ANCHORAGE

1. CONCRETE SHALL BE AS SPECIFIED IN THE CONCRETE MIX, PLACEMENT AND FINISH SHEET SPECIFICATIONS.
2. ALL REINFORCING SHALL BE NEW STOCK DEFORMED BARS CONFORMING TO **ASTM A615** U.N.O. (A706 WHERE WELDING IS REQUIRED, SEE NOTE #6):
   A. #3 BARS AND LARGER---------- GRADE 60
3. ALL REBAR SHALL BE COLD BENT.
4. SPLICES IN REINFORCING STEEL SHALL BE LAPPED ACCORDING TO DETAIL U.N.O.
5. SEPARATE BARS 1 1/2 DIAMETERS OR 1" CLEAR, WHICHEVER IS GREATER. BARS INDICATED AS CONTINUOUS MAY BE FABRICATED IN CONVENIENT LENGTHS, STAGGER LAP SPLICE LOCATIONS A MINIMUM OF 24". FABRICATION DETAILS SHALL CONFORM TO **CRSI MANUAL OF STANDARD PRACTICE 2009 28TH EDITION**.
6. WELDING OF REINFORCING SHALL BE ALLOWED ONLY WHERE DETAILED ON DRAWINGS. ALL REINFORCING THAT IS TO BE WELDED SHALL BE **ASTM A706**, GRADE 60, CONFORMING TO **CBC 2019 SECTION 1705A.3.1** AND IN ACCORDANCE WITH AWS SPECIFICATIONS **(AWS D1.4/D1.4M-2011)**. FABRICATION DETAILS SHALL CONFORM TO **DETAILS AND DETAILING OF CONCRETE REINFORCEMENT (ACI 315-99)** AND **CRSI MANUAL OF STANDARD PRACTICE 2018 28TH EDITION (w/ 2019 ERRATA)**. WELDING SHALL NOT BE DONE WITHIN TWO BAR DIAMETERS OF ANY BENT PORTION OF A BAR WHICH HAS BEEN BENT COLD. WELDING OF CROSSING BARS SHALL NOT BE PERMITTED FOR ASSEMBLY OF REINFORCEMENT UNLESS AUTHORIZED BY THE STRUCTURAL ENGINEER.
7. FIELD SPLICES NOT ORIGINALLY SHOWN ON DRAWINGS WILL BE PERMITTED ONLY WITH APPROVAL OF THE ENGINEER.
8. MINIMUM CONCRETE COVER FOR REINFORCING SHALL BE AS FOLLOWS:
   - CAST AGAINST EARTH (EXCEPT SLABS ON GRADE)----------3"
   - SLABS ON GRADE----------1 1/2"
   - EXPOSED TO EARTH OR WEATHER
     - #5 BARS AND SMALLER----------1 1/2"
     - #6 BARS AND LARGER----------2"
   - NOT EXPOSED TO WEATHER OR IN CONTACT WITH GROUND SLABS, WALLS, JOISTS
     - #11 BARS AND SMALLER----------3/4"
     - #14 AND #18 BARS----------1 1/2"
9. WELDED WIRE REINFORCEMENT SHALL CONFORM TO **ASTM A-497** AND **ASTM A-185**. LAP ONE FULL MESH ON SIDES AND ENDS. WELDED WIRE REINFORCEMENT SHALL BE SUPPORTED TO WITHSTAND CONCRETE PLACEMENT. PULLING OF MESH INTO PLACE AFTER PLACEMENT IS NOT ALLOWED.
10. ALL ANCHOR RODS FOR STRUCTURAL STEEL SHALL CONFORM TO **ASTM F1554** GRADE 55 (U.N.O.) CLASS 2A WITH SUPPLEMENTARY REQUIREMENT NO. 1 INCLUDING COLOR MARKING TYPICAL U.N.O. FOR EXPOSED ENDS, PROVIDE COLOR CODING PER **ASTM F1554** OR PERMANENT IDENTIFICATION MARKS PER **ASTM F1554** SUPPLEMENT #2 AND # 3 ON EACH ROD FOR IDENTIFICATION.
11. ALL ANCHOR RODS FOR SHEAR WALL HOLDOWNS SHALL CONFORM TO **ASTM F1554** GRADE 36 (U.N.O.) CLASS 2A. PROVIDE COLOR CODING PER **ASTM F1554** OR PERMANENT IDENTIFICATION MARKS PER **ASTM F1554** SUPPLEMENT #2 AND #3 ON EACH ROD FOR IDENTIFICATION.
12. FOR ANCHOR BOLTS AT WALL SILL, SEE COLD FORMED STEEL FRAMING NOTE #10 AND #11.
13. ALL REINFORCING STEEL, ANCHOR RODS, ANCHOR BOLTS, DOWELS AND OTHER INSERTS SHALL BE IN PLACE AND SHALL BE WELL SECURED IN POSITION PRIOR TO PLACING CONCRETE.

CONCRETE POST-INSTALLED ANCHOR NOTES

1. POST-INSTALLED ANCHORS SHALL BE THE FOLLOWING:
   A. EPOXIED THREADED ROD ASSEMBLIES SHALL BE:
      a. HILTI HIT-RE 500 V3 EPOXY **ICC REPORT NO. ESR-3814 (ISSUED: JAN. 2021, REVISED MARCH 2021)** AS MANUFACTURED BY HILTI, INC., 7250 DALLAS PARKWAY; STE. 1000, PLANO, TEXAS 75024.
         - MINIMUM EMBEDMENT DEPTHS SHALL BE PER CONTRACT DRAWINGS, PLANS, AND DETAILS.
      b. THREADED ROD SHALL BE ASTM A36 U.N.O.
   B. EPOXIED REBAR ASSEMBLIES SHALL BE:
      a. HILTI HIT-RE 500 V3 EPOXY **ICC REPORT NO. ESR-3814 (ISSUED: JAN. 2021, REVISED MARCH 2021)** AS MANUFACTURED BY HILTI, INC., 7250 DALLAS PARKWAY; STE. 1000, PLANO, TEXAS 75024.
         - MINIMUM EMBEDMENT DEPTHS SHALL BE PER CONTRACT DRAWINGS, PLANS, AND DETAILS.
      b. REBAR SHALL BE ASTM A615 GRADE 60.
   C. EXPANSION BOLT ASSEMBLIES SHALL BE:
      a. HILTI KWIK BOLT-TZ2 ASSEMBLY **ICC REPORT NO. ESR-4266 (ISSUED: DEC. 2020, REVISED JULY 2021)**, AS MANUFACTURED BY HILTI, INC., 7250 DALLAS PARKWAY; STE. 1000, PLANO, TEXAS 75024.
   D. SCREW ASSEMBLIES SHALL BE:
      a. HILTI KWIK HUS-EZ **ICC REPORT NO. ESR-3027 (ISSUED: DEC. 2019, REVISED APRIL 2021)** AS MANUFACTURED BY HILTI, INC., 7250 DALLAS PARKWAY; STE. 1000, PLANO, TEXAS 75024.
   E. INSTALLATION SHALL BE IN ACCORDANCE WITH THE MANUFACTURER'S RECOMMENDATIONS. HOLE SHALL BE DRY AND CLEANED WITH WIRE BRUSH AND PRESSURIZED AIR PRIOR TO INSTALLATION. FOR EPOXY APPLICATIONS, USE EQUIPMENT WHICH WILL ACCURATELY MIX AND DISPENSE THE COMPONENTS. THE REBAR OR ROD SHOULD BE ROTATED AS IT IS PUSHED INTO THE HOLE.
2. ALL POST-INSTALLED ANCHORS SHALL BE INSPECTED BY AN APPROVED TESTING AND INSPECTION AGENCY AND TESTED IN ACCORDANCE WITH THE REQUIREMENTS OF THE ICC OR IAPMO REPORT AND **CBC SECTION 1910A.5** TO THE TEST VALUES STATED IN THE TABLE BELOW.
   A. THE LOAD MAY BE APPLIED BY ANY METHOD THAT WILL EFFECTIVELY MEASURE THE TENSION IN THE ANCHOR, SUCH AS DIRECT PULL TEST WITH A HYDRAULIC JACK, CALIBRATED SPRING-LOADING DEVICE, A TORQUE WRENCH CALIBRATED FOR USE WITH THE SPECIFIC ANCHOR, ETC.
   B. TEST FREQUENCY
      a. SILL PLATE; 10 PERCENT
      b. ALL OTHER STRUCTURAL APPLICATIONS; 100 PERCENT
      c. NON-STRUCTURAL APPLICATIONS (EQUIPMENT ANCHORAGE, ETC.); 50 PERCENT OR ALTERNATIVE BOLTS IN A GROUP, INCLUDING AT LEAST ONE HALF THE ANCHORS IN EACH GROUP.
      d. SHEAR DOWELS ACROSS COLD JOINTS IN SLABS ON GRADE, WHERE THE SLAB IS NOT PART OF THE LATERAL FORCE RESISTING SYSTEM, SHALL NOT BE REQUIRED.
      e. *TF INDICATES A TEST FREQUENCY OF 10 PERCENT PER **1910A.5.3** EXCEPTION #2.
   C. TEST ACCEPTANCE
      a. HYDRAULIC RAM METHOD: ANCHORS TESTED WITH A HYDRAULIC JACK OR SPRING-LOADED DEVICES SHALL MAINTAIN THE TEST LOAD FOR A MINIMUM OF 15 SECONDS AND SHALL EXHIBIT NO DISCONCERNABLE MOVEMENT DURING THE TENSION TEST.
      b. FOR ADHESIVE ANCHORS, WHERE OTHER THAN THE BOND IS BEING TESTED, THE TESTING DEVICE SHALL NOT RESTRICT THE CONCRETE SHEAR CONE TYPE FAILURE MECHANISM FROM OCCURRING.
      c. TORQUE WRENCH METHOD (MAY NOT BE USED WITH REBAR):
         - ANCHORS TESTED WITH A CALIBRATED TORQUE WRENCH MUST ATTAIN THE SPECIFIED TORQUE WITHIN 1/2 TURN OF THE NUT. (SCREWS MUST ATTAIN THE SPECIFIED TORQUE WITHIN 1/4 TURN OF THE SCREW AFTER THE INITIAL SEATING OF THE SCREW HEAD.
         - IF ANY ANCHOR FAILS TESTING, ALL ANCHORS OF THE SAME TYPE SHALL BE TESTED, WHICH ARE INSTALLED BY THE SAME TRADE NOT PREVIOUSLY TESTED UNTIL TWENTY CONSECUTIVE ANCHORS PASS, THEN RESUME THE INITIAL TEST FREQUENCY.

TEST LOADS

REBAR SIZE	ROD/SCREW DIA.	TENSION (LBS)	TORQUE (FT-LBS)		
			ROD	EXP. BOLT	SCREW
- - -	1/4"	-	-	-	18
- - -	3/8"	-	-	30	19, 40*
#4	1/2"	-	-	50	45
#5	5/8"	-	-	40	85
#6	3/4"	-	-	110	95
#7	7/8"	-	-	-	-
#8	1"	-	-	185	-
- - -	1 1/4"	-	-	-	-

NOTE: FOR REBAR/ROD TENSION TEST LOADS SEE PLANS AND DETAILS.
* FOR 1 5/8" EMBED, USE 19; FOR 2 1/2"+ EMBED, USE

STRUCTURAL STEEL

1. ALL STRUCTURAL STEEL SHALL BE FABRICATED AND ERECTED PER AISC SPECIFICATIONS FOR BUILDINGS AND SHALL CONFORM TO THE FOLLOWING, U.N.O.:
   - W SHAPES: **ASTM A992**
   - HSS SHAPES: **ASTM A500, GRADE B**
   - PIPE SHAPES: **ASTM A53, GRADE B**
   - ALL OTHER SHAPES: **ASTM A36**
   - PLATES AND BARS: **ASTM A36**
2. WIDE FLANGE MEMBERS THAT HAVE FLANGE THICKNESS EXCEEDING 2 INCHES SHALL CONFORM TO **ASTM A6 SUPPLEMENTARY REQUIREMENT S30**, CHARPY V-NOTCH IMPACT TEST FOR STRUCTURAL SHAPES - ALTERNATE CORE LOCATION. TEST SHALL MEET A MINIMUM AVERAGE VALUE OF 20 FT LB AT +70 DEG F. WIDE FLANGE MEMBERS THAT ARE PART OF THE LATERAL FORCE RESISTING SYSTEM THAT HAVE FLANGE THICKNESS EXCEEDING 1 1/2 INCHES SHALL ALSO CONFORM.
3. PLATES THAT HAVE 2 INCH THICKNESS AND THICKER SHALL CONFORM TO **ASTM A6 SUPPLEMENTARY REQUIREMENT S5** CHARPY V-NOTCH IMPACT TEST. TEST SHALL MEET A MINIMUM AVERAGE VALUE OF 20 FT LB AT +70 DEG F.
4. FOR ANCHOR ROD REQUIREMENTS SEE CONCRETE REINFORCEMENT AND ANCHORAGE GENERAL NOTES.
5. WELDED THREADED STUDS, HEADED STUDS AND DEFORMED BAR ANCHORS
   A. WELDED THREADED STUDS MAY BE **ASTM A36** (Fy=36 KSI). EQUIVALENT DIAMETER NELSON STUDS ARE ACCEPTABLE. ALL WELDS SHALL BE MADE AND INSPECTED IN ACCORDANCE WITH **AMERICAN WELDING SOCIETY STRUCTURAL WELDING CODE (AWS D1.1/D1.1M:2010).**
   B. ALL WELDED THREADED STUDS SHALL BE "CFL FULLY THREADED STUDS" OR "CJL REDUCED BASE THREADED STUDS" MANUFACTURED BY NELSON STUD WELDING, INC. STUDS SHALL BE INSTALLED PER MANUFACTURERS RECOMMENDATIONS USING A NELSON WELD GUN, UNLESS NOTED OTHERWISE ON DETAILS. ALL WELDS SHALL BE MADE AND INSPECTED IN ACCORDANCE WITH **AWS D1.1/D1.1M:2010**.
   C. STUD BOLTS SHALL BE "NELSON" STUDS. ALL NELSON STUD ANCHORS SHALL BE 3/4" CONFORMING TO **ASTM A108** WITH FABRICATION AND INSTALLATION IN CONFORMANCE WITH **ICC ESR-2856 (REISSUED: DECEMBER 2021)**.
6. ALL UNFINISHED NUTS AND BOLTS "MACHINE BOLTS" (M.B.) SHALL BE **ASTM A307** U.N.O.
7. WHERE HIGH STRENGTH STEEL BOLTS (H.S.B.) ARE INDICATED, ASSEMBLY SHALL COMPLY WITH THE SPECIFICATIONS FOR STRUCTURAL JOINTS AS ENDORSED BY THE AMERICAN INSTITUTE OF STEEL CONSTRUCTION (AISC) AS FOLLOWS:
   A. **ALL BOLTS SHALL CONFIRM TO ASTM F3125.**
   B. **GRADE A325-N:** ASSEMBLY SHALL COMPLY WITH REQUIREMENTS FOR SNUG-TIGHT "BEARING" TYPE CONNECTIONS WITH THREADS INCLUDED IN THE SHEAR PLANE.
   C. **GRADE A490-SC**: ASSEMBLY SHALL COMPLY WITH REQUIREMENTS FOR SLIP CRITICAL (FRICTION) TYPE CONNECTIONS. INSTALLATION SHALL FOLLOW EITHER "CALIBRATED WRENCH METHOD", "DIRECT TENSION INDICATOR", "TURN OF NUT", OR "TWIST-OFF" TYPE TENSION-CONTROL". FAYING SURFACE CONDITIONS MUST MEET AISC SPECIFICATIONS.
   D. **GRADE F1852** BOLTS (TWIST-OFF) MAY BE USED FOR **GRADE 325** BOLTS.
   E. **GRADE F2280** BOLTS (TWIST-OFF) MAY BE USED FOR **GRADE 490** BOLTS. **GRADE F2280** SHALL BE USED WHERE "TWIST-OFF" TYPE TENSION-CONTROL PRETENSIONING IS USED.
8. HOLES, COPES OR OTHER CUTS OR MODIFICATIONS OF THE STRUCTURAL STEEL MEMBERS SHALL NOT BE MADE IN THE FIELD WITHOUT WRITTEN APPROVAL FROM THE STRUCTURAL ENGINEER OF RECORD.
9. ALL BOLT HOLES IN STEEL SHALL BE PUNCHED OR DRILLED. NO TORCHING OF HOLES ALLOWED. HOLES SHALL BE 1/16" LARGER THAN THE NOMINAL BOLT DIAMETER, U.N.O.
10. WELDING:
    A. ALL WELDING SHALL BE DONE BY CERTIFIED WELDERS USING THE SHIELDED ARC PROCESS AND IN ACCORDANCE WITH AWS STANDARDS. JOINT DETAILS SHALL COMPLY WITH AWS REQUIREMENTS FOR JOINTS ACCEPTED WITHOUT QUALIFICATION TESTS.
    B. ALL WELDS SHALL BE UNIFORM IN SIZE AND APPEARANCE, AND FREE OF PINHOLES, POROSITY, UNDERCUTTING OR OTHER DEFECTS. ALL BUTT WELDS SHALL BE FULL PENETRATION.
    C. NO WELDING PERMITTED ON MEMBERS SUPPORTING LOADS.
    D. WELD METAL SHALL HAVE A NOMINAL TENSILE STRENGTH OF 70,000 PSI MINIMUM.
    E. ALL WELDS USED IN PRIMARY MEMBERS AND CONNECTIONS IN THE LATERAL FORCE RESISTING SYSTEM ARE DEMAND CRITICAL AND SHALL BE MADE WITH A FILLER METAL THAT HAS A MINIMUM CHARPY V-NOTCH TOUGHNESS OF 20 FT-LBS AT 0° F. AS DETERMINED BY AWS CLASSIFICATION OR MANUFACTURER CERTIFICATION. SEE ELEVATION DRAWINGS FOR LOCATIONS OF THE LATERAL FORCE RESISTING SYSTEM.
    F. WHERE DEMAND CRITICAL WELDS HAVE FILLER METALS USED IN COMBINATION WITH FILLER METALS OF DIFFERENT PROCESSES (INTERMIX), PROVIDE CERTIFICATION OF CHARPY V-NOTCH COMPATIBILITY PER **AISC 341-16 & AMERICAN WELDING SOCIETY STRUCTURAL WELDING CODE SEISMIC SUPPLEMENT (AWS D1.8/D1.8M:2009)**.
11. THE CONTRACTOR SHALL BE RESPONSIBLE FOR ALL ERECTION AIDS AND JOINT PREPARATIONS THAT INCLUDE BUT ARE NOT LIMITED TO, ERECTION ANGLES, LIFT HOLES, AND OTHER AIDES, WELDING PROCEDURES, REQUIRED ROOT OPENINGS, ROOT FACE DIMENSIONS, GROOVE ANGLES, BACKING BARS, WELD EXTENSION TABS, COPES, SURFACE ROUGHNESS VALUES AND TAPERS OF UNEQUAL PARTS. THE CONTRACTOR SHALL BE RESPONSIBLE FOR THE COMPLIANCE WITH ALL CURRENT OSHA REQUIREMENTS.
12. ALL STEEL SHALL BE THOROUGHLY CLEANED, REMOVING ALL LOOSE MILL SCALE, GREASE, DIRT AND FOREIGN MATTER BY SCRAPING OR SANDBLASTING.
13. ALL STEEL TO BE GREY PRIMER COLOR. DO NOT SHOP PAINT TO THE FOLLOWING:
    A. SURFACES WHICH WILL BE ENCASED IN CONCRETE OR MORTAR. PAINT EMBEDDED STEEL WHICH IS PARTIALLY EXPOSED ON EXPOSED PORTIONS AND INITIAL TWO INCHES OF EMBEDDED PORTIONS ONLY.
    B. SURFACES WITHIN 2 INCHES OF JOINTS TO BE WELDED IN FIELD INCLUDING TOP FLANGES OF MEMBERS SUPPORTING STEEL DECKING WHICH ARE TO BE WELDED.
14. WHERE STRUCTURAL STEEL IS NOTED TO BE GALVANIZED, IT SHALL BE HOT-DIP GALVANIZED IN ACCORDANCE WITH **ASTM A123**, **ASTM A384**, AND **ASTM A385**. ALL SURFACES WITHIN TWO INCHES OF ANY FIELD WELD LOCATION SHALL BE FREE OF MATERIALS THAT WOULD PREVENT PROPER WELDING OF PRODUCE OBJECTIONABLE FUMES.
15. FIELD TOUCH-UP OF PRIMED, PAINTED, AND GALVANIZED SURFACES SHALL BE PERFORMED TO REPAIR COATING ABRASIONS, AS WELL AS TO PROTECT ALL AREAS AT CONNECTIONS.
16. FINAL PAINT AND COLOR FOR EXPOSED STEEL SHALL BE PER OWNER'S SPECIFICATION.
17. IMMEDIATELY AFTER ERECTION, CLEAN FIELD WELDS, BOLTED CONNECTIONS, AND ABRADED AREAS OF SHOP PAINT. APPLY PRIMER TO EXPOSED AREAS WITH SAME MATERIAL AS USED FOR SHOP PRIMER.

COLD FORMED STEEL FRAMING

1. ALL COLD FORMED STEEL STUDS, TRACKS AND JOIST 54 MIL (16 GAUGE) AND THICKER SHALL CONFORM TO **ASTM A-653**, GRADE 50, WITH A MINIMUM YIELD OF 50,000 PSI, AND A G60 COATING UNLESS NOTED OTHERWISE.
2. ALL COLD FORMED STEEL STUDS, TRACKS AND JOIST 43 MIL (18 GAUGE)AND LESS IN THICKNESS SHALL CONFORM TO **ASTM A-653**, GRADE 33, WITH A MINIMUM YIELD OF 33,000 PSI, AND A G60 COATING UNLESS NOTED OTHERWISE.
3. ALL COLD FORMED STEEL BRIDGING, END CLOSURES, AND ACCESSORIES SHALL CONFORM TO **ASTM A-611**, GRADE C, WITH A MINIMUM YIELD OF 33,000 PSI, UNLESS NOTED OTHERWISE.
4. FABRICATION AND ERECTION OF ALL COLD FORMED STEEL FRAMING MEMBERS SHALL CONFORM TO **AMERICAN IRON AND STEEL INSTITUTE NORTH AMERICAN SPECIFICATION FOR THE DESIGN OF COLD-FORMED STEEL STRUCTURAL MEMBERS (AISI S100-12)** AND **AMERICAN IRON AND STEEL INSTITUTE NORTH AMERICAN STANDARD FOR COLD-FORMED STEEL FRAMING - GENERAL PROVISIONS (AISI S200-12)**.
5. ALL COLD FORMED STEEL PRODUCTS AND ACCESSORIES SUCH AS STUDS, TRACKS, JOISTS, AND MISCELLANEOUS COLD FORMED STEEL FRAMING MEMBERS DESIGNATED ON THESE DRAWINGS AND REQUIRED BY THE COLD FORMED STEEL MANUFACTURER SHALL BE MANUFACTURED BY THE CURRENT MEMBERS OF **STEEL STUD MANUFACTURERS ASSOCIATION (SSMA)** WITH **ICC-ES ESR-3064P AND CLARK DIETRICH BUILDING SYSTEMS ICC ESR-1166P**. DEEP LEG TRACKS (or FLANGE) SHALL BE BY **CLARK DIETRICH BUILDING SYSTEMSICC-ESR-1166P.** SLOTTED TRACKS SHALL BE BY **SCAFCO STEEL STUD COMPANY IAPMO 0283.** TERNATE COLD FORMED STEEL FRAMING SYSTEMS MAY BE SUBMITTED FOR APPROVAL CONSIDERATION TO THE DESIGNER WITH A CURRENT ICC-ES OR IAPMO REPORT.
6. WELDING OF ALL COLD FORMED STEEL FRAMING SHALL CONFORM TO **AWS D1.3/D1.3M:2008**. REFER TO "STRUCTURAL STEEL SPECIFICATIONS" FOR ADDITIONAL WELDING REQUIREMENTS. ALL WELDS OF GALVANIZED STEEL SHALL BE TOUCHED UP WITH ZINC-RICH PAINT. ALL WELDS OF CARBON SHEET STEEL SHALL BE TOUCHED UP WITH PAINT.
7. ALL FRAMING COMPONENTS SHALL BE CUT SQUARELY FOR ATTACHMENT TO PERPENDICULAR MEMBERS, OR AS REQUIRED FOR AN ANGULAR FIT AGAINST ABUTTING MEMBERS. MEMBERS SHALL BE HELD POSITIVELY IN PLACE UNTIL PROPERLY FASTENED.
8. FRAMING COMPONENTS MAY BE PRE-ASSEMBLED INTO PANELS PRIOR TO ERECTION. PREFABRICATED PANELS SHALL HAVE COMPONENTS ATTACHED IN A MANNER AS TO PREVENT RACKING OF THE PANEL AND TO PREVENT DISTORTION IN ANY MEMBER WHILE LIFTING AND TRANSPORTING.
9. TRACKS SHALL BE SECURELY ANCHORED TO THE SUPPORTING STRUCTURE AS SHOWN ON THE DRAWINGS. AT TRACK BUTT JOINTS, ABUTTING PIECES OF TRACK SHALL BE SECURELY ANCHORED TO A COMMON STRUCTURAL ELEMENT, OR THEY SHALL BE BUTT-WELDED OR SPLICED TOGETHER.
10. FOR TRACK CONNECTIONS AT INTERIOR NON-BEARING, NON-SHEAR WALLS, APPROVED POWER DRIVEN FASTENERS PER (3/S003) MAY BE USED.

    INSTALL IN ACCORDANCE WITH THE DRAWINGS, THE MANUFACTURER'S RECOMMENDATIONS AND ICC-ES OR IAPMO ER APPROVALS. A 5/8"Ø HEX HEAD ANCHOR BOLT @ 32" O.C. MAY BE USED IN LIEU OF A POWER DRIVEN FASTENER. SEE TYPICAL DETAIL (5/S010)
11. ALL ANCHOR BOLTS SHALL BE HEX HEAD **ASTM F1554** GRADE 36 (U.N.O.) CLASS 2A. PROVIDE COLOR CODING PER **ASTM F1554** OR PERMANENT IDENTIFICATION MARKS PER **ASTM F1554** SUPPLEMENT #2 AND #3 ON EACH ROD FOR IDENTIFICATION.
12. STUDS SHALL BE PLUMBED, ALIGNED AND SECURELY ATTACHED TO THE FLANGE OR WEBS OF BOTH UPPER AND LOWER TRACKS, U.N.O.
13. WALL STUD BRIDGING SHALL BE ATTACHED IN A MANNER TO PREVENT STUD ROTATION. BRIDGING ROWS SHALL BE SPACED ACCORDING TO THE COLD FORMED STEEL MANUFACTURER'S REQUIREMENTS, BUT NOT GREATER THAN 4'-0" ON CENTER. BRIDGING SHALL BE IN PLACE PRIOR TO PLACING LOADINGS.
14. TEMPORARY BRACING OF ALL WALL PANELS SHALL BE PROVIDED UNTIL ERECTION IS COMPLETED.
15. ALL MEMBER TO MEMBER CONNECTIONS SHALL BE CONNECTED WITH MINIMUM (2) #10 SCREWS WITH 7/16" DIAMETER PAN WASHER HEADS BY 1/2" LONG, UNLESS NOTED OTHERWISE. A 1/16" FILLET WELD BY 3/4" LONG MAY BE SUBSTITUTED FOR THE SCREWS AT THE CONTRACTOR'S OPTION. SEE ABOVE FOR ADDITIONAL WELDING REQUIREMENTS.
16. SPLICES IN AXIALLY LOADED STUDS SHALL NOT BE PERMITTED.
17. JOISTS SHALL BE LOCATED DIRECTLY OVER BEARING STUDS OR A LOAD DISTRIBUTION MEMBER SHALL BE PROVIDED AT THE TOP OF THE BEARING WALL.
18. WEB STIFFENERS SHALL BE PROVIDED AT REACTION POINTS AND/OR POINTS OF CONCENTRATED LOADS WHERE INDICATED ON THE DRAWINGS.
19. JOIST BRIDGING SHALL BE PROVIDED WHERE INDICATED ON THE DRAWINGS. BRIDGING SHALL BE IN PLACE PRIOR TO PLACING LOADS.
20. END BLOCKING SHALL BE PROVIDED WHERE JOIST ENDS ARE NOT OTHERWISE RESTRAINED FROM ROTATION.
21. FASTENERS THROUGH FIRE RETARDANT TREATED SHEATHING SHALL BE OF HOT DIPPED ZINC COATED GALVANIZED, STEEL, STAINLESS, OR SILICONE BRONZE. FASTENERS OTHER THAN NAILS, TIMBER RIVETS, WOOD SCREWS, & LAG SCREWS SHALL BE PERMITTED TO BE MECHANICALLY DEPOSITED ZINC-COATED STEEL WITH COATING WEIGHTS IN ACCORDANCE WITH **ASTM B695, CLASS 55** MIN. VERIFY WITH SHEATHING MANUFACTURER.
22. ALL SLIP CONNECTIONS, "VERTICLIP", "DRIFTCLIP", & "DRIFT TRAK" SHALL BE MANUFACTURED BY THE STEEL NETWORK OR SCAFCO, INSTALLED PER MFR. GUIDELINES AND CONFORM TO **ICC ESR 2049** DATED DECEMBER, 2020 OR **IAPMO ER-0494** DATED APRIL, 2019.
23. FOR SHEAR WALL HOLDOWN ANCHOR ROD REQUIREMENTS SEE CONCRETE REINFORCEMENT AND ANCHORAGE GENERAL NOTES.

PLYWOOD SHEATHING

1. ALL PLYWOOD SHEATHING SHALL BE FIRE RETARDANT TREATED SHEATHING. VERIFY FIRE RETARDANT TREATED REQUIREMENTS WITH SHEATHING MANUFACTURER.
2. STRUCTURAL SHEATHING ON FLOOR SHALL BE PLYWOOD. PLYWOOD SHEATHING SHALL BE 5-PLY MINIMUM WHERE INDICATED AS 23/32" OR THICKER. SHEATHING SHALL BE "EXPOSURE 1" "STRUCTURAL I" AND CONFORM TO COMMERCIAL STANDARD PS-1 AND PS-2 AND HAVE A PANEL GRADE OF C-D UNDER THE "PERFORMANCE STANDARDS AND QUALIFICATION POLICY FOR STRUCTURAL-USE PANELS" PUBLISHED BY THE AMERICAN PLYWOOD ASSOCIATION. ALL PANELS SHALL BEAR THE STAMP OF AN APPROVED GRADING AGENCY. SEE CONTRACT DRAWINGS FOR REQUIRED THICKNESS AND PANEL INDEX.
3. NO PLYWOOD PIECE SHALL BE LESS THAN 2'-0" IN THE LEAST DIMENSION NOR LESS THAN 8 SQ. FT. IN TOTAL AREA FOR HORIZONTAL DIAPHRAGMS.

STEEL DECK NOTES

1. STEEL DECKING SHALL BE AS INDICATED ON PLANS. FABRICATION AND INSTALLATION SHALL CONFORM TO **IAPMO-ES REPORT NO. ER-0423 (ISSUED: AUGUST, 2021)** FOR VERCO DECKING, INC.
2. DECK PANELS SHALL SPAN OVER THREE SUPPORTS WHERE STRUCTURAL STEEL FRAMING PERMITS. FLOOR DECK SUPPORTING CONCRETE FILL MUST SPAN OVER THREE SUPPORTS FOR THE OMISSION OF SHORING. DECK PANELS SHALL INCLUDE ALL ACCESSORIES FOR THIS TYPE OF DECKING; SUCH AS CLOSURE, FLASHING, EDGE FORMS, ETC. TO COMPLETE THE INSTALLATION OF THE STEEL DECK. PANELS SHALL BE ALIGNED AND PLACED IN ACCORDANCE WITH THE MANUFACTURER'S ICC-ES OR IAPMO-ES REPORT AND THESE DRAWINGS.
3. OPENINGS IN THE STEEL DECKING SUPPORTING CONCRETE FILL CUTTING NO MORE THAN ONE FLUTE AND LESS THAN 6" IN DIAMETER NEED NO REINFORCING. FOR OPENING EXCEEDING THIS LIMITATION, SEE TYPICAL DETAILS.
4. WELDING SHALL CONFORM TO **AWS D1.1/D1.1M:2010** AND **AMERICAN WELDING SOCIETY STRUCTURAL WELDING CODE SHEET STEEL (AWS D1.3/D1.3M:2008)**. SEE STRUCTURAL STEEL SPECIFICATIONS FOR ADDITIONAL WELDING REQUIREMENTS.
5. ENDS OF STEEL DECKING PANELS SHALL BUTT OVER SUPPORTS (NO LAP, U.N.O.). DECK SHALL BEAR 2" MINIMUM ON SUPPORTING FRAMEWORK.
6. THE STEEL DECKING SHALL BE CLEANED OF ALL DIRT, DEBRIS, OIL, WATER AND ANY FOREIGN MATERIAL PRIOR TO APPLICATION OF CONCRETE.
7. APPROVED SHOP DRAWINGS SHOWING LAYOUT AND FASTENING PATTERN MUST BE ON THE JOB SITE FOR INSPECTION PURPOSES.

POWER ACTUATED FASTENERS

1. POWER ACTUATED FASTENERS (PAF) SPECIFIED IN THESE DRAWINGS SHALL BE AS FOLLOWS:

COLD FORMED STEEL TO CONCRETE:	HILTI X-U	(0.157"Ø)
COLD FORMED STEEL TO STRUCT. STEEL:	HILTI X-U 15	(0.145"Ø)
METAL DECK TO STRUCT. STEEL: SEE (2/S008)	FOR MFR & SIZE	

2. POWER ACTUATED FASTENERS SHALL BE INSTALLED IN ACCORDANCE WITH THE DRAWINGS, MANUFACTURER'S RECOMMENDATIONS, AND ICC ESR-2269 REPORT.
3. CONCRETE APPLICATIONS: POWER ACTUATED FASTENERS SHALL NOT BE INSTALLED PRIOR TO CONCRETE ATTAINING FULL STRENGTH AS SPECIFIED IN THESE DRAWINGS. MINIMUM SPACING BETWEEN FASTENERS MUST BE 4 INCHES, MINIMUM EDGE DISTANCE MUST BE 3 INCHES, AND MINIMUM EMBEDMENT MUST BE 1 1/4 INCHES, UNLESS NOTED OTHERWISE.
4. STRUCT. STEEL APPLICATIONS: POWER ACTUATED FASTENERS MUST BE DRIVEN TO WHERE THE POINT OF THE FASTENER PENETRATES TROUGH THE STEEL BASE MATERIAL, UNLESS NOTED OTHERWISE. MINIMUM SPACING BETWEEN FASTENERS MUST BE 1 INCH AND MINIMUM EDGE DISTANCE MUST BE 1/2 INCH.

STRUCTURAL OBSERVATION PROGRAM

1. STRUCTURAL ENGINEER OF RECORD SHALL PROVIDE STRUCTURAL OBSERVATION PER **CBC 1704.6 (1704A.6)**. CONTRACTOR SHALL NOTIFY STRUCTURAL ENGINEER 48 HOURS PRIOR TO COMPLETION OF THE FOLLOWING TO ARRANGE FOR PERIODIC OBSERVATION:
   A. FOUNDATION AND SLAB REINFORCING PRIOR TO PLACEMENT OF CONCRETE.
   B. FLOOR SHEATHING FASTENING, STRAPPING AND WALL ANCHORAGE PRIOR TO PLACEMENT OF FLOORING.
   C. ROOF DECK FASTENING, STRAPPING AND WALL ANCHORAGE PRIOR TO PLACEMENT OF ROOFING.
   D. SHEAR WALL SHEATHING FASTENING PRIOR TO PLACEMENT OF FINISH.
   E. MASONRY LAYOUT & CONSTRUCTION PRIOR TO PLACEMENT OF GROUT.
2. OBSERVED DEFICIENCIES SHALL BE REPORTED IN WRITING TO THE OWNER'S REPRESENTATIVE, SPECIAL INSPECTOR, CONTRACTOR, AND BUILDING OFFICIAL. THE STRUCTURAL OBSERVER SHALL SUBMIT TO THE BUILDING OFFICIAL A WRITTEN STATEMENT THAT THE SITE VISITS HAVE BEEN MADE AND IDENTIFYING ANY REPORTED DEFICIENCIES WHICH, TO THE BEST OF THE STRUCTURAL OBSERVER'S KNOWLEDGE, HAVE NOT BEEN RESOLVED. THE STRUCTURAL OBSERVER SHALL MAKE ADDITIONAL SITE VISITS AS NECESSARY TO VERIFY THAT ALL REPORTED DEFICIENCIES HAVE BEEN SATISFACTORILY CORRECTED.

SPECIAL INSPECTION

1. IN ACCORDANCE WITH CBC SECTION 110, SECTION 1704A, AND SECTION 1705A, OWNER SHALL EMPLOY AN INDEPENDENT AGENCY TO PERFORM REQUIRED TESTS AND SPECIAL INSPECTIONS DURING CONSTRUCTION PER THE REQUIREMENTS OF CBC CHAPTER 17A, THE DIVISION OF THE STATE ARCHITECTS, AND THE CONTRACT DOCUMENTS.
2. TESTING AND SPECIAL INSPECTION REPORTS SHALL BE PREPARED FOR EACH INSPECTION ITEM ON A DAILY BASIS WHENEVER WORK IS PERFORMED SO THAT ITEM FOLLOWING THE CONTINUOUS OR PERIODIC REQUIREMENTS SPECIFIED.
3. REPORTS SHALL INDICATE WHETHER THE WORK INSPECTED WAS DONE IN CONFORMANCE OR NONCONFORMANCE WITH APPROVED CONSTRUCTION DOCUMENTS. NONCONFORMITIES SHALL BE BROUGHT TO THE IMMEDIATE ATTENTION OF THE CONTRACTOR FOR CORRECTION. IF NOT CORRECTED, THE NONCONFORMITIES SHALL BE BROUGHT TO THE ATTENTION OF THE DIVISION OF THE STATE ARCHITECTS AND THE ARCHITECT (STRUCTURAL ENGINEER) PRIOR TO THE COMPLETION OF THAT PHASE OF WORK. A FINAL REPORT DOCUMENTING REQUIRED SPECIAL INSPECTION AND CORRECTION OF NONCONFORMITIES SHALL BE SUBMITTED UPON COMPLETION OF WORK.
4. TESTING AND SPECIAL INSPECTION REPORTS SHALL BE DISTRIBUTED TO OWNER, CONTRACTOR, THE DIVISION OF THE STATE ARCHITECT, ARCHITECT AND STRUCTURAL ENGINEER.
5. TESTING AND SPECIAL INSPECTION SHALL BE PROVIDED ON THE ITEMS INDICATED IN THE INSPECTION MANUAL AND FORM DSA-103 STATEMENT OF STRUCTURAL TESTS AND SPECIAL INSPECTIONS.

SUBMITTAL/SPECIAL CONDITIONS

1. PRIOR TO COMMENCEMENT OF EXCAVATION FOR FOUNDATIONS (AT LEAST 48 HOURS) THE CONTRACTOR IS TO CONTACT THE GEOTECHNICAL ENGINEER, WHO IS TO ADVISE THE BUILDING OFFICIAL IN WRITING THAT: THE BUILDING PAD WAS PREPARED AND COMPACTED IN ACCORDANCE WITH THE SOILS REPORT RECOMMENDATIONS. ADDITIONALLY THAT THE FOUNDATION GRADING WAS PERFORMED IN CONFORMANCE WITH THE SOILS REPORT RECOMMENDATIONS AND APPROVED PLANS. A COPY OF THE REPORT SHALL BE GIVEN TO THE STRUCTURAL ENGINEER OF RECORD.
2. PRIOR TO REQUESTING A FOUNDATION INSPECTION (AT LEAST 48 HOURS) THE CONTRACTOR IS TO CONTACT THE GEOTECHNICAL ENGINEER, WHO IS TO ADVISE THE BUILDING OFFICIAL IN WRITING THAT: THE BUILDING FOUNDATION FOOTING EXCAVATION DEPTH, BACKFILL MATERIALS AND DRAINAGE SUBSTANTIALLY CONFORMS WITH THE SOILS REPORT RECOMMENDATIONS AND APPROVED PLANS. A COPY OF THE REPORT SHALL BE GIVEN TO THE STRUCTURAL ENGINEER OF RECORD.
3. SPECIAL INSPECTION REPORTS ARE TO BE SUBMITTED DIRECTLY TO THE ENFORCEMENT AGENCY PER **CBC SEC. 1704A.2.4** (WITH COPIES TO STRUCTURAL ENGINEER OF RECORD, GENERAL CONTRACTOR AND OWNER).
4. PROJECT INSPECTOR SHALL BE DSA CERTIFIED ACCORDING TO PART 1, 4-333.1. SPECIAL INSPECTOR SHALL BE DSA APPROVED ACCORDING TO PART 1, 4-335 (f).
5. THE FOLLOWING SHOP DRAWINGS/SUBMITTALS SHALL BE PROVIDED FOR REVIEW BY THE STRUCTURAL ENGINEER OF RECORD PRIOR TO FABRICATION OR DELIVERY.
   A. CONCRETE MIX DESIGN
   B. REINFORCING STEEL
   C. STRUCTURAL STEEL
   D. MISCELLANEOUS STEEL
   E. MASONRY REINFORCING STEEL
   F. METAL DECK
   G. COLD FORMED METAL FRAMING & ACCESSORIES
   H. CONDUIT EMBEDDED IN CONCRETE OR MASONRY
   I. CONTRACTORS STATEMENT OF RESPONSIBILITY
6. PRODUCT SUBSTITUTIONS MAY BE ALLOWED ONLY IF THEY MEET THE REQUIREMENTS OF THESE SHEET SPECIFICATION AND THE PROJECT MANUAL, AND IF COMPLETE WRITTEN ENGINEERING DATA FOR EACH CONDITION REQUIRED FOR THIS PROJECT IS PROVIDED TO THE STRUCTURAL ENGINEER OF RECORD TWO WEEKS PRIOR TO BID DATE AND APPROVED IN WRITTEN ADDENDA BY THE ARCHITECT. DATA IS TO INDICATE CODE BASIS BY YEAR, AUTHORITY FOR STRESSES AND STRESS INCREASES , IF ANY, AND AMOUNT OF EXPECTED DEFLECTION FOR FLEXURAL MEMBERS UNDER (1) TOTAL LOAD AND (2) LIVE LOAD ONLY. ALL INCREASED COSTS IN MECHANICAL, SPRINKLER, ELECTRICAL OR GENERAL INSTALLATION AND ANY ARCHITECTURAL OR STRUCTURAL REDESIGN RESULTING FROM SUBSTITUTION SHALL BE BORNE BY THE GENERAL CONTRACTOR.
7. SUBSTITUTIONS AFFECTING STRUCTURAL SAFETY, FIRE AND LIFE SAFETY OR ACCESS COMPLIANCE SHALL BE APPROVED BY DSA PRIOR TO FABRICATIONS OR USE.

CONTRACTOR RESPONSIBILITY

1. CONTRACTOR RESPONSIBILITY - **CBC 2019 SECTION 1704.4 (1704A.4)**: EACH CONTRACTOR RESPONSIBLE FOR THE CONSTRUCTION OF A MAIN WIND- OR SEISMIC-FORCE-RESISTING SYSTEM, DESIGNATED SEISMIC SYSTEM OR A WIND- OR SEISMIC-RESISTING COMPONENT LISTED IN THE STATEMENT OF SPECIAL INSPECTIONS (CBC **SECTION 1704.3 (1704A.3)**) SHALL SUBMIT A WRITTEN STATEMENT OF RESPONSIBILITY TO THE BUILDING OFFICIAL AND THE OWNER PRIOR TO THE COMMENCEMENT OF WORK ON THE SYSTEM OR COMPONENT. THE CONTRACTOR'S STATEMENT OF RESPONSIBILITY SHALL CONTAIN ACKNOWLEDGEMENT OF AWARENESS OF THE SPECIAL REQUIREMENTS CONTAINED IN THE STATEMENT OF SPECIAL INSPECTION.

ABBREVIATIONS

&	AND	JST.	JOIST
L	ANGLE	JT.	JOINT
@	AT		
C.L.	CENTERLINE		
Ø	DIAMETER OR ROUND	K.O.	KNOCK OUT
//	PARALLEL	K.O.P.	KNOCK OUT PANEL
⊥	PERPENDICULAR		
PL.	PLATE		
#	POUND OR NUMBER	LB(S)	POUND (POUNDS)
(C«)	CAMBER	L.F.	LINEAL FOOT
(E)	EXISTING	L.H.	LEFT HAND
(N)	NEW	LL	LIVE LOAD
		LLH	LONG LEG HORIZ.
A.B.	ANCHOR BOLT	LLV	LONG LEG VERT.
ABV.	ABOVE	LOC.	LOCATION
ADDL.	ADDITIONAL	LSL	LAMINATED STRAND LUMBER
ADJC.	ADJACENT	LT.WT.	LIGHT WEIGHT
A.F.F.	ABOVE FINISH FLOOR	LVL	LAMINATED VENEER LUMBER
A.F.G.	ABOVE FINISH GRADE		
AGG.	AGGREGATE	MACH.	MACHINE
ALT.	ALTERNATE	MAINT.	MAINTENANCE
ALUM.	ALUMINUM	MAX.	MAXIMUM
APPROX.	APPROXIMATE	M.B.	MACHINE BOLT
ARCH.	ARCHITECT(URAL)	M.B.M.	METAL BUILDING MFR.
		MECH.	MECHANICAL
BEL.	BELOW	MED.	MEDIUM
BLDG.	BUILDING	MEMB.	MEMBRANE
BLK.	BLOCK	MET.	METAL
BLKG.	BLOCKING	MEZZ.	MEZZANINE
BM.	BEAM	MFR.	MANUFACTURER
B.F.	BOUNDARY FASTENING	MIL.	MILLIMETER
B.O.D.	BOTTOM OF DECK	MIN.	MINIMUM
B.O.F.	BOTTOM OF FOOTING	MISC.	MISCELLANEOUS
BOT.	BOTTOM	MPH	MILES PER HOUR
BRG.	BEARING	MTL	METAL
BTWN.	BETWEEN		
B.U.	BUILT-UP	N	NORTH
		N.I.C.	NOT IN CONTRACT
CANT.	CANTILEVER	NO.	NUMBER
C.F.	CUBIC FOOT	NOM.	NOMINAL
C.J.	CONSTRUCTION JOINT/ CONTROL JOINT	N.T.S.	NEAR SIDE
		N.W.	NOT TO SCALE
C.L.	CENTER LINE		NORMAL WEIGHT
CLG.	CEILING		
CLR.	CLEAR/CLEARANCE	O/	OVER
CMU	CONCRETE MASONRY UNIT	O.C.	ON CENTER
COL.	COLUMN	O.D.	OUTSIDE DIAMETER/DIM.
CONC.	CONCRETE	OFOW	OUTSIDE FACE OF WALL
CONN.	CONNECTION	OPP.	OPPOSITE HAND
CONST.	CONSTRUCTION	O.H.M.S.	OVAL HEAD MACH. SCREW
CONT.	CONTINUOUS	O.H.W.S.	OVAL HEAD WOOD SCREW
CONTR.	CONTRACTOR	OPNG.	OPENING
COORD.	COORDINATION	OPP.	OPPOSITE
CP	COMPLETE PENETRATION	ORIG.	ORIGINAL
C.T.C.	CENTER TO CENTER	OVHD	OVER HEAD
CTR.	CENTER	OWSJ	OPEN WEB STEEL JOIST
CTRD	CENTERED		
CTSK	COUNTERSUNK		
CU.	CUBIC	P.A.F.	POWDER ACTUATED FASTENER
C.Y.	CUBIC YARD	PERP.	PERPENDICULAR
		PL.	PLATE
DBL.	DOUBLE	PLY.	PLYWOOD
DEMO	DEMOLISH / DEMOLITION	PP	PARTIAL PENETRATION
DET.	DETAIL	PSF	POUNDS PER SQUARE FOOT
D.F.	DOUGLAS FIR	PSI	POUNDS PER SQUARE INCH
DIA.	DIAMETER	PSL	PARALLEL STRAND LUMBER
DIAG.	DIAGONAL	PT.	POINT
DIM.	DIMENSION	P.T.	POST TENSION
DL	DEAD LOAD	P.T.D.F.	PRESSURE TREATED DOUGLAS FIR
DN.	DOWN	PTN.	PARTITION
DP.	DEEP	PW	PLYWOOD
DWG.(S)	DRAWING(S)		
DWL	DOWEL		
		R.	RADIUS
		REINF.	REINFORCING
E	EAST	REM.	REMOVE
EA.	EACH	REQD.	REQUIRED
E.F.	EACH FACE	R.H.	RIGHT HAND
E.F.	EDGE FASTENING	R.H.W.S.	ROUND HEAD WOOD SCREW
E.J.	EXPANSION JOINT	R.O.	ROUGH OPENING
EL.	ELEVATION		
ELEC.	ELECTRICAL)		

\\tetr-file1\Users\luis.valtierra\Documents\12032-S-COS Tulare CTE_luis.valtierra.rvt

SOIL PREPARATION AT FOUNDATIONS & FLOOR SLABS

N.T.S. 11

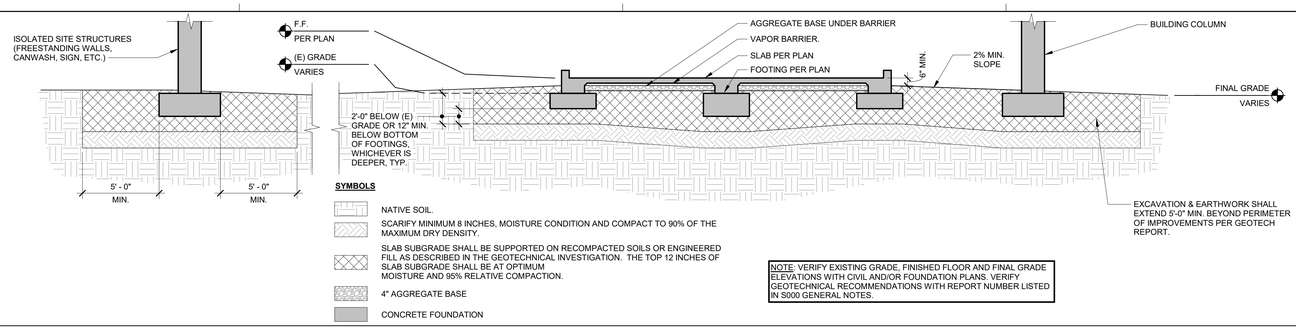

NOTE: VERIFY EXISTING GRADE, FINISHED FLOOR AND FINAL GRADE ELEVATIONS WITH CIVIL AND/OR FOUNDATION PLANS. VERIFY GEOTECHNICAL RECOMMENDATIONS WITH REPORT NUMBER LISTED IN S000 GENERAL NOTES.

REINF. BAR SPLICE FOR CONC.

N.T.S. 1

CONCRETE
REINFORCING BAR SPLICE LENGTH - GRADE 60 OR LESS

BAR #	CONC. f'c = 3,000 psi					CONC. f'c = 4,000 psi				
	SPLICE [4,8,9,10]		DEVELOPMENT [8]		L_{st} [7,8,9]	SPLICE [4,8,9,10]		DEVELOPMENT [8]		L_{st} [7,8,9]
	TOP [3]	OTHER [3]	TOP [3]	OTHER [3]		TOP [3]	OTHER [3]	TOP [3]	OTHER [3]	
#3	30"	23"	23"	17"	6"	26"	20"	20"	15"	6"
#4	38"	29"	29"	22"	8"	33"	25"	25"	19"	7"
#5	49"	37"	37"	28"	10"	42"	32"	32"	24"	9"
#6	56"	43"	43"	33"	12"	50"	38"	38"	29"	10"
#7	82"	63"	63"	48"	14"	72"	55"	55"	42"	12"
#8	94"	72"	72"	55"	16"	82"	63"	63"	48"	14"
#9	106"	81"	81"	62"	18"	93"	71"	71"	54"	15"
#10	119"	91"	91"	70"	20"	104"	80"	80"	61"	17"
#11	133"	102"	102"	78"	22"	115"	88"	88"	67"	19"
#14	NP	NP	121"	93"	38"	NP	NP	106"	81"	33"
#18	NP	NP	162"	124"	50"	NP	NP	141"	108"	43"

* NP: NOT PERMITTED

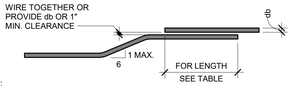

NOTES:
1. SPLICE LENGTHS ARE GIVEN FOR CONCRETE WITH A MINIMUM COMPRESSIVE STRENGTH LISTED AT 28 DAYS.
2. FOR EPOXY COATED REBAR, MULTIPLY TABULATED VALUE BY 1.5.
3. TOP BARS ARE STRAIGHT HORIZONTAL BARS WITH MORE THAN 12" OF FRESH CONCRETE BELOW. OTHER BARS ARE STRAIGHT BOTTOM OR STRAIGHT VERTICAL BARS.
4. SPLICE LENGTHS SHALL BE CLASS "B", U.N.O. CLASS "A" SPLICES AS DEFINED IN THE ACI 318 MAY BE REDUCED BY 30 PERCENT.
5. SCHEDULE IS FOR 60,000 psi GRADE STEEL.
6. SCHEDULE IS FOR HARDROCK CONCRETE. INCREASE SCHEDULE VALUES BY 1.33 FOR LIGHTWEIGHT CONCRETE.
7. HOOKED BARS ARE VERTICAL OR HORIZONTAL BARS TERMINATING WITH STANDARD HOOKS THAT COMPLY WITH DETAIL
8. CLEAR SPACING BETWEEN BARS BEING SPLICED OR DEVELOPED SHALL BE 2 BAR DIAMETERS (MIN.).
9. CONCRETE CLEAR COVER OVER BARS BEING DEVELOPED SHALL BE 1 BAR DIAMETER (MIN.).
10. WHEN SPLICING TWO BARS OF DIFFERING DIAMETER, THE SPLICE LENGTH FOR THE LARGER BAR SHALL GOVERN.

FOOTING CONSTRUCTION

N.T.S. 17

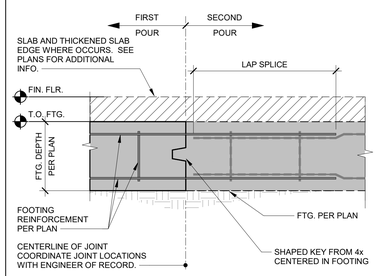

STEPPED BOTTOM FOOTING

N.T.S. 18

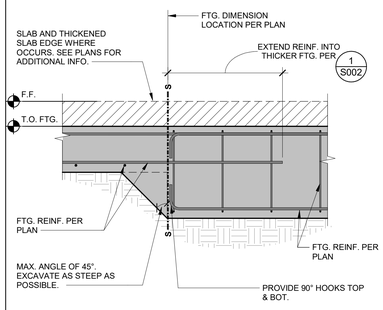

STEPPED TOP FOOTING

N.T.S. 19

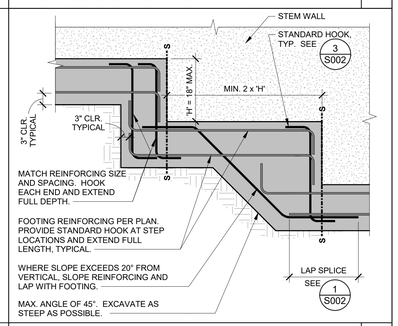

PIPES AT FOOTINGS

N.T.S. 15

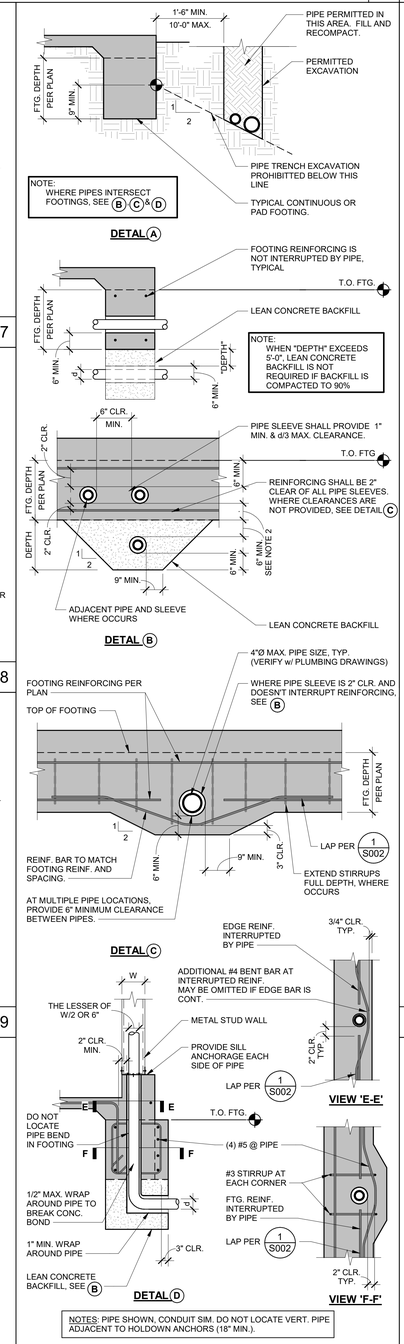

FOUNDATION FORMWORK

N.T.S. 9

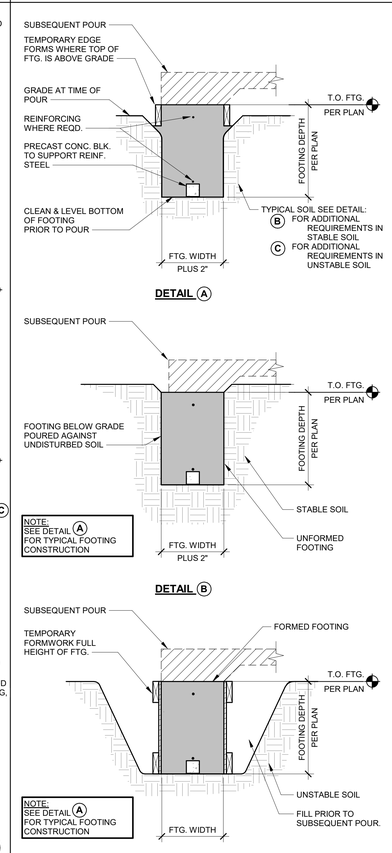

NOTES:
1. ALL FOOTINGS SHALL BE PLACED PER THE TYPICAL REQUIREMENTS OF DETAIL A
2. FOOTINGS MAY BE POURED DIRECTLY INTO NEAT EXCAVATIONS PER DETAIL B WHERE SOIL IS CONSIDERED STABLE AS DETERMINED BY THE SOIL ENGINEER.
3. PROVIDE FORMWORK PER DETAIL C WHERE SOIL IS CONSIDERED UNSTABLE AS DETERMINED BY THE SOIL ENGINEER.
4. STAKES ARE NOT PERMITTED WITHIN THE FOOTING SECTION.
5. SEE THE GEOTECHNICAL REPORT FOR ADDITIONAL REQUIREMENTS.

REINF. @ ADJACENT FTG.

N.T.S. 5

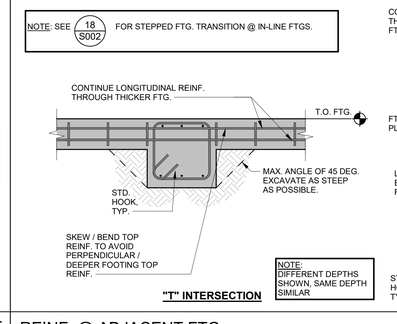

STANDARD HOOK

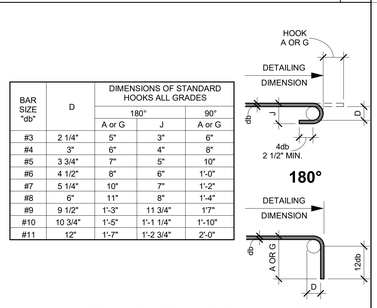

BAR SIZE "db"	D	DIMENSIONS OF STANDARD HOOKS ALL GRADES			
		180°		90°	
		A or G	J	A or G	
#3	2 1/4"	5"	3"	6"	
#4	3"	6"	4"	8"	
#5	3 3/4"	7"	5"	10"	
#6	4 1/2"	8"	6"	1'-0"	
#7	5 1/4"	10"	7"	1'-2"	
#8	6"	11"	8"	1'-4"	
#9	9 1/2"	1'-3"	11 3/4"	1'7"	
#10	10 3/4"	1'-5"	1'-1 1/4"	1'-10"	
#11	12"	1'-7"	1'-2 3/4"	2'-0"	

STIRRUP w/ HOOK

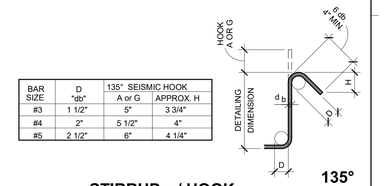

BAR SIZE	D "db"	135° SEISMIC HOOK	
		A or G	APPROX. H
#3	1 1/2"	5"	3 3/4"
#4	2"	5 1/2"	4"
#5	2 1/2"	6"	4 1/4"

NOTES:
1. 135-DEG COLUMN TIE HOOKS MAY NOT BE BENT TO LESS DIAMETER OF COLUMN VERTICAL BAR ENCLOSED IN HOOK.
2. INSIDE DIAMETER OF BENDS IN WELDED WIRE FABRIC, PLAIN OR DEFORMED, FOR STIRRUPS AND TIES SHALL BE AT LEAST FOUR WIRE DIAMETERS FOR WIRE LARGER THAN D6 OR W6 AND TWO WIRE DIAMETERS FOR ALL OTHER WIRES. BENDS WITH INSIDE DIAMETER OF LESS THAN EIGHT WIRE DIAMETER SHALL BE LESS THAN FOUR DIAMETERS FROM THE NEAREST WELD INTERSECTION.

HOOK AND STIRRUP

N.T.S. 3

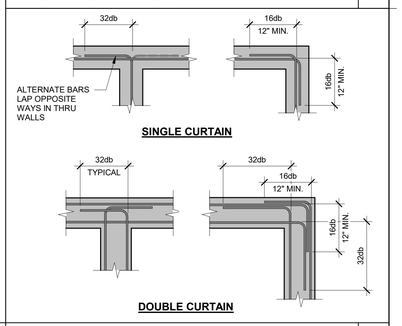

REINF. @ FOOTING INTERSECTION

N.T.S. 4

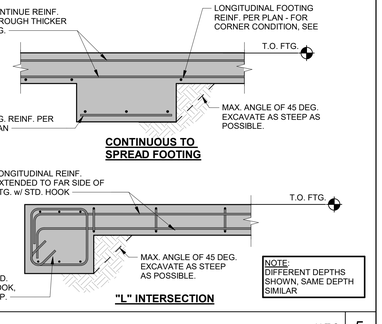

PLOT DATE: 10/31/2022 3:24:17 PM

FOR BID ONLY

Teter, LLP expressly reserves its common law copyright and other property rights in these plans. This document, the ideas and designs incorporated herein, as an instrument of professional service, is not to be used in whole or in part, for any other project without prior written authorization.

MARK	DATE	DESCRIPTION
	11/1/22	DSA BACKCHECK

REGISTERED PROFESSIONAL ENGINEER S. BAILEY No. 55691 STRUCTURAL STATE OF CALIFORNIA

TETER, LLP
ARCHITECTS ENGINEERS CONNECTED
FRESNO HEADQUARTERS
VISALIA | BAKERSFIELD | MODESTO | SAN LUIS OBISPO

TULARE CAMPUS CTE
COLLEGE OF THE SEQUOIAS
4999 E. BARDSLEY AVE.
TULARE, CA

DRAWING TITLE
TYPICAL DETAILS - FOUNDATION

PROJECT NO.
20-12032

DRAWING
S002

\\tet-file1\Users\luis.valtierra\Documents\12032-S-COS Tulare CTE_luis.valtierra.rvt

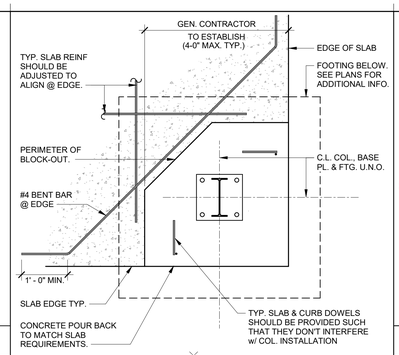

SLAB CONSTRUCTION JOINT N.T.S. 1

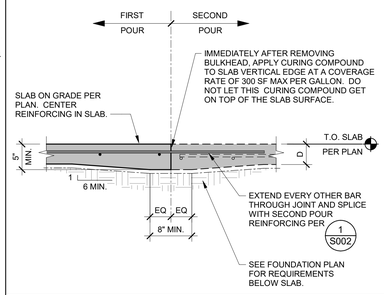

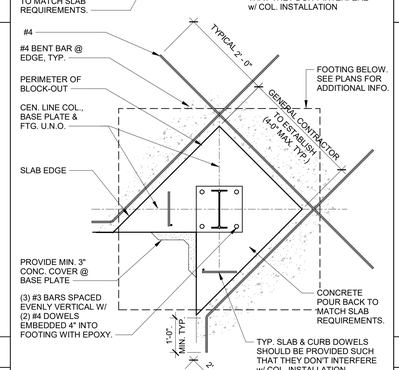

SLAB SAWCUT JOINT N.T.S. 2

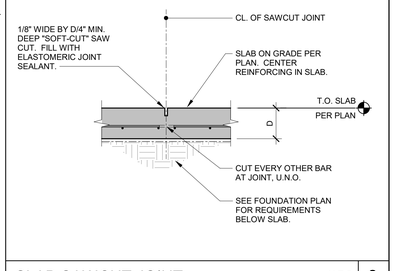

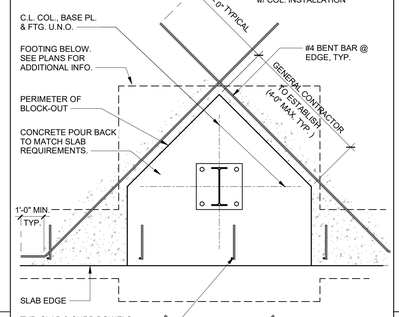

INT. NON-BEARING WALL N.T.S. 3

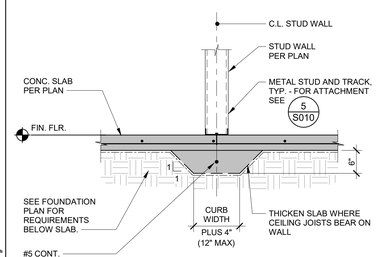

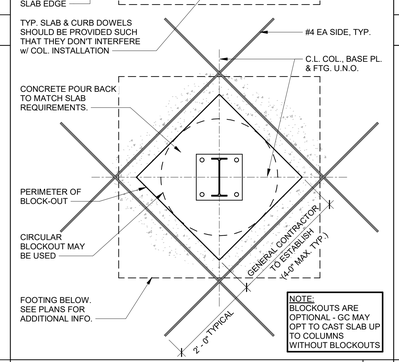

SLAB BLOCKOUT N.T.S. 9

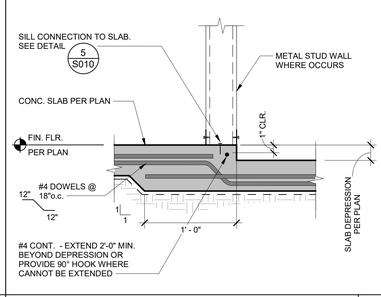

SLAB DEPRESSION N.T.S. 4

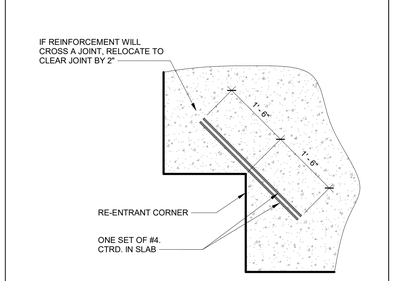

RE-ENTRANT CORNER N.T.S. 10

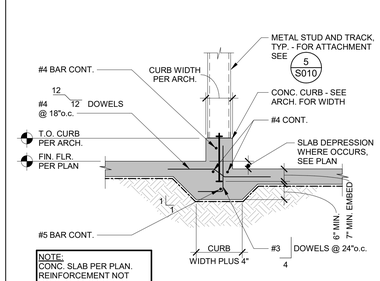

INTERIOR FTG. AND CURB N.T.S. 5

PLOT DATE: 10/31/2022 3:24:20 PM

FOR BID ONLY

Teter, LLP expressly reserves its common law copyright and other property rights in these plans. This document, the ideas and designs incorporated herein, as an instrument of professional service, is not to be used in whole or part, for any other project without prior written authorization.

MARK	DATE	DESCRIPTION
	11/1/22	DSA BACKCHECK

REGISTERED PROFESSIONAL ENGINEER S. BAILEY No. 55628 STRUCTURAL STATE OF CALIFORNIA

TETER, LLP
ARCHITECTS ENGINEERS CONNECTED
FRESNO HEADQUARTERS
VISALIA | BAKERSFIELD | MODESTO | SAN LUIS OBISPO

TETER

TULARE CAMPUS CTE
COLLEGE OF THE SEQUOIAS
4999 E. BARDSLEY AVE.
TULARE, CA

DRAWING TITLE
TYPICAL DETAILS - FOUNDATION

PROJECT NO.
20-12032

DRAWING
S003

\\teter-file1\Users\luis.valtierra\Documents\12032-S-COS Tulare CTE_luis.valtierra.rvt

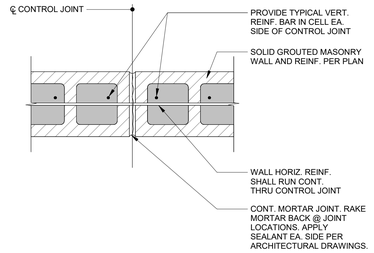

CONC. BLOCK WALL CONTROL JOINT N.T.S. 6

BAR SIZE	CMU f'c = 2,500 PSI			CMU f'c = 3,000 PSI		
	SPLICE[8,8,9,10]	DEVELOPMENT	L_{db}[5]	SPLICE[6,8,9,10]	DEVELOPMENT	L_{db}[5]
#3	27	19	15	27	17	13
#4	36	34	28	36	30	24
#5	45	53	45	45	46	38
#6	54	74	65	54	64	55
#7	63	101	90	63	87	76
#8	72	152	139	72	131	118
#9	82	193	179	82	167	153
#10	92	244	228	92	211	195
#11	102	301	283	102	261	243

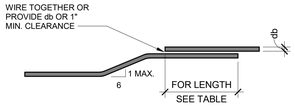

NOTES:
1. SCHEDULE IS FOR 60,000 PSI STEEL.
2. ALL CMU CELLS WITH REINFORCING SHALL BE FULLY GROUTED.
3. SPLICE AND DEVELOPMENT LENGTH ARE IN INCHES.
4. FOR EPOXY-COATED REINFORCEMENT, MULTIPLY TABULATED VALUE BY 1.5.
5. HOOKED BARS ARE VERTICAL OR HORIZONTAL BARS TERMINATING WITH STANDARD HOOKS THAT COMPLY WITH DETAIL A/S004
6. CLEAR SPACING BETWEEN BARS BEING SPLICED OR DEVELOPED SHALL BE 1 BAR DIAMETER OR 1 INCH (MIN.).
7. SCHEDULE IS FOR CMU WITH A MINIMUM COMPRESSIVE STRENGTH LISTED AT 28 DAYS.
8. WHEN SPLICING TWO BARS OF DIFFERING DIAMETER, THE SPLICE LENGTH FOR THE LARGER BAR SHALL GOVERN.
9. BARS SPLICED BY NON-CONTACT LAP SPLICES SHALL NOT BE SPACED FARTHER APART THAN THE LESSER OF ONE-FIFTH THE REQUIRED LENGTH OR 8".
10. ADJACENT SPLICES SHALL BE STAGGERED AT LEAST 24 BAR DIAMETERS.

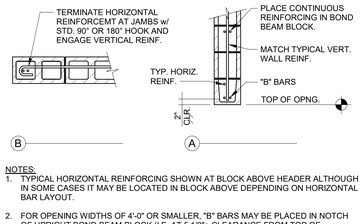

NOTES:
1. TYPICAL HORIZONTAL REINFORCING SHOWN AT BLOCK ABOVE HEADER ALTHOUGH IN SOME CASES IT MAY BE LOCATED IN BLOCK ABOVE DEPENDING ON HORIZONTAL BAR LAYOUT.
2. FOR OPENING WIDTHS OF 4'-0" OR SMALLER, "B" BARS MAY BE PLACED IN NOTCH OF UPRIGHT BOND BEAM BLOCK (I.E. AT 5 1/2"+ CLEARANCE FROM TOP OF OPENING) AND ANY CONTINUOUS BARS LOCATED IN THIS POSITION MAY BE COUNTED AS APPLYING TO MIN. HEAD REINFORCEMENT

OPENING WIDTH	"A" BARS	"B" BARS	"C" BARS
2'-0" OR LESS	1 - #5	1 - #5	NONE
2'-1" TO 4'-0"	2 - #5	1 - #5	1 - #5
OVER 4'-0"	2 - #5	2 - #6	1 - #5

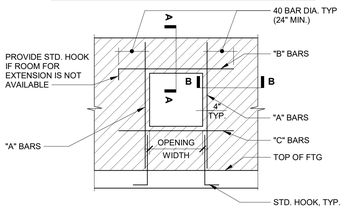

NOTE:
REINFORCMENT SHOWN IS TYPICAL REINFORCMENT REQUIRED FOR ALL OPENINGS UNLESS DIFFERENT REINFORCEMENT IS SHOWN ON SPECIFIC WALL ELEVATIONS.

REINF. @ CMU WALL OPENING N.T.S. 13

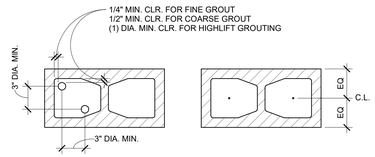

CONDUIT **SINGLE LAYER**

NOTE:
1. DO NOT LOCATE CONDUIT OR PIPES IN CELLS w/ REINFORCING PARALLEL.
2. TOTAL COMBINED AREA OF CONDUIT MAY NOT DISPLACE MORE THAN 6% OF THE CELL AREA, FOR COLUMNS OR PILASTERS, NO MORE THAN 2% OF NET CROSS SECTION AREA.
3. DO NOT EMBED ALUMINUM CONDUIT OR ACCESORIES IN MASONRY, GROUT OR MORTAR UNLESS EFFECTIVELY COATED OR COVERED TO PROVENT CHEMICAL REACTIONS BETWEEN ALUMINUM AND CEMENT OR ELECTROLYTIC ACTION BETWEEN ALUMINUM AND STEEL.
4. PIPES SHALL NOT BE EMBEDDED IN MASONRY WHEN: CONTAINING LIQUID, GAS, OR VAPORS AT TEMPERATURES HIGHER THAN 150 DEG F. UNDER PRESSURE IN EXCESS OF 55 PSI, OR CONTAINING WATER OR OTHER LIQUIDS SUBJECT TO FREEZING.

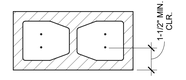

DOUBLE LAYER

REINF. LOCATION N.T.S. 8

REINF. BAR SPLICE FOR MASONRY N.T.S. 2

BAR SIZE "db"	D	DIMENSIONS OF STANDARD HOOKS ALL GRADES		
		180°		90°
		A or G	J	A or G
#3	2 1/4"	5"	3"	6"
#4	3"	6"	4"	8"
#5	3 3/4"	7"	5"	10"
#6	4 1/2"	8"	6"	1'-0"
#7	5 1/4"	10"	7"	1'-2"
#8	6"	1'1"	8"	1'-4"
#9	9 1/2"	1'-3"	11 3/4"	1'7"
#10	10 3/4"	1'-5"	1'-1 1/4"	1'-10"
#11	12"	1'-7"	1'-2 3/4"	2'-0"

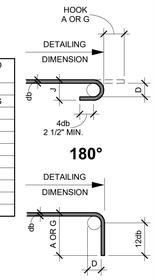

STANDARD HOOK

BAR SIZE	D "db"	135° SEISMIC HOOK	
		A or G	APPROX. H
#3	1 1/2"	5"	3 3/4"
#4	2"	5 1/2"	4"
#5	2 1/2"	6"	4 1/4"

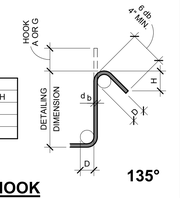

STIRRUP w/ HOOK

NOTES:
1. 135-DEG COLUMN TIE HOOKS MAY NOT BE BENT TO LESS DIAMETER OF COLUMN VERTICAL BAR ENCLOSED IN HOOK.
2. INSIDE DIAMETER OF BENDS IN WELDED WIRE FABRIC, PLAIN OR DEFORMED, FOR STIRRUPS AND TIES SHALL BE AT LEAST FOUR WIRE DIAMETERS FOR WIRE LARGER THAN D6 OR W6 AND TWO WIRE DIAMETERS FOR ALL OTHER WIRES. BENDS WITH INSIDE DIAMETER OF LESS THAN EIGHT WIRE DIAMETER SHALL BE LESS THAN FOUR DIAMETERS FROM THE NEAREST WELD INTERSECTION.

HOOK AND STIRRUP N.T.S. 4

NOTES:
1. CONTROL JOINTS TO BE LOCATED AT CHANGES IN WALL HEIGHT.
2. CONTROL JOINTS IN CMU TO BE ALIGNED w/ JOINTS IN CONCRETE FOUNDATIONS, FLOORS, OR ROOFS WHERE POSSIBLE.
3. CONTROL JOINT SPACING NOT TO EXCEED 1.5H.
4. CONTROL JOINTS PER C/S004

CMU WALL REINFORCING AND CONTROL JOINT LAYOUT N.T.S. 10

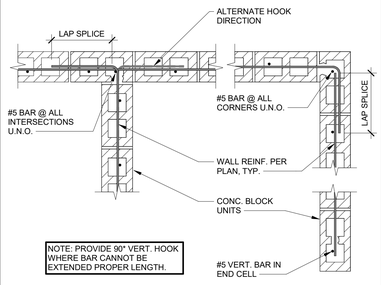

CONC. BLOCK CORNER N.T.S. 5

PLOT DATE: 10/31/2022 3:24:23 PM

FOR BID ONLY

Teter, LLP expressly reserves its common law copyright and other property rights in these plans. This document, the ideas and designs incorporated herein, as an instrument of professional service, is not to be used in whole or in part, for any other project without prior written authorization.

MARK	DATE	DESCRIPTION
	11/1/22	DSA BACKCHECK

REGISTERED PROFESSIONAL ENGINEER S. T. BAILEY No. 55658 STRUCTURAL STATE OF CALIFORNIA

TETER, LLP
FRESNO HEADQUARTERS
VISALIA | BAKERSFIELD | MODESTO | SAN LUIS OBISPO
ARCHITECTS ENGINEERS CONNECTED

TETER

TULARE CAMPUS CTE
COLLEGE OF THE SEQUOIAS
4999 E. BARDSLEY AVE.
TULARE, CA

DRAWING TITLE
TYPICAL DETAILS - MASONRY

PROJECT NO.
20-12032

DRAWING
S004

\\teter-file1\Users\luis.valtierra\Documents\12032-S-COS Tulare CTE_luis.valtierra.rvt

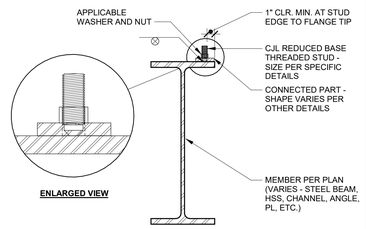

NOTE:
1. WITH CJL STUD, NO INCREASE IN CONNECTED PART HOLE DIAMETER IS REQUIRED.
2. AS OPTION, CFL FULLY THREADED STUD MAY BE UTILIZED. CONNECTED PART HOLE DIAMETER SHALL UTILIZE OVERSIZED HOLES (DIA. + 3/16") AND PROVIDE WELDABLE PLATE WASHER ABOVE CONNECTED PART.

WELDED THREADED STUD N.T.S. 16

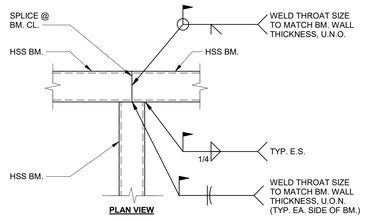

NOTES:
1. HSS DEPTH VARY, TYP.
2. HORIZ. BM.'s SHOWN, SLOPING BM.'s SIM., TYP.
3. SKEWED BM.'s SIM.
4. SINGLE BM. SHOWN, MULTIPLE BM.'s SIM.
5. DECK (WHERE OCCURS) NOT SHOWN

HSS TO HSS CONN. N.T.S. 11

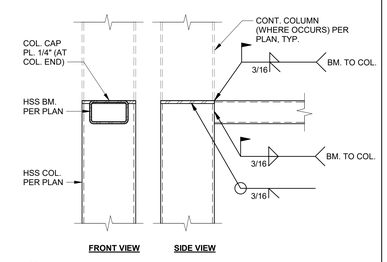

A1 HSS BEAM TO HSS COLUMN (WIDER COLUMN)

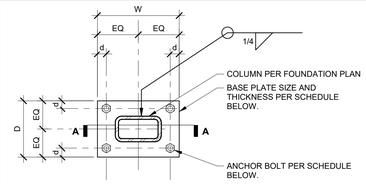

BASE PLATE TYPE "C"

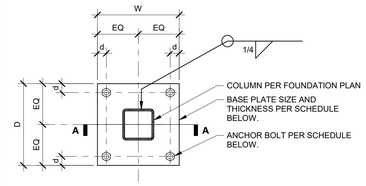

BASE PLATE TYPE "B"

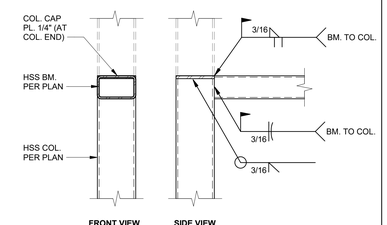

A2 HSS BEAM TO HSS COLUMN (WITH SAME WIDTH)

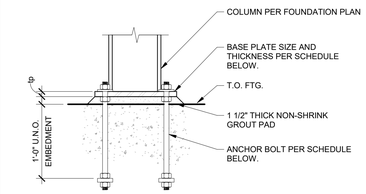

TYPICAL SECTION 'A-A'

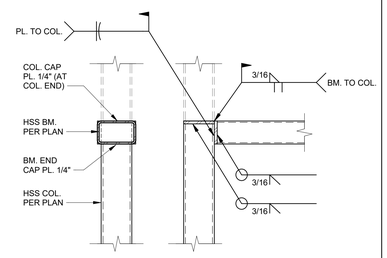

A3 HSS BEAM TO HSS COLUMN (WIDER BEAM)

STEEL COLUMN PLATE SCHEDULE							
COLUMN	PLATE TYPE	BASE PLATE					ANCHOR BOLT (1)
		D	W	tp	d	GRADE	
HSS3X3	"B"	9"	9"	3/4"	1 1/2"	A36 (36KSI)	(4) 3/4"Ø
HSS4X4	"B"	10"	10"	3/4"	1 1/2"	A36 (36KSI)	(4) 3/4"Ø
HSS5X5	"B"	11"	11"	3/4"	1 1/2"	A36 (36KSI)	(4) 3/4"Ø
HSS6X6	"B"	12"	12"	3/4"	1 1/2"	A36 (36KSI)	(4) 3/4"Ø
HSS7X5	"C"	11"	13"	3/4"	1 1/2"	A36 (36KSI)	(4) 3/4"Ø
HSS8X4	"C"	10"	14"	3/4"	1 1/2"	A36 (36KSI)	(4) 3/4"Ø
HSS10X5	"C"	11"	16"	3/4"	1 1/2"	A36 (36KSI)	(4) 3/4"Ø
HSS12X10	"C"	16"	18"	1"	1 1/2"	A36 (36KSI)	(4) 3/4"Ø

NOTES:
1. FOR ADDITIONAL ANCHOR BOLT REQUIREMENTS, SEE DETAIL 5/S005

HSS COLUMN BASE PLATE N.T.S. 3

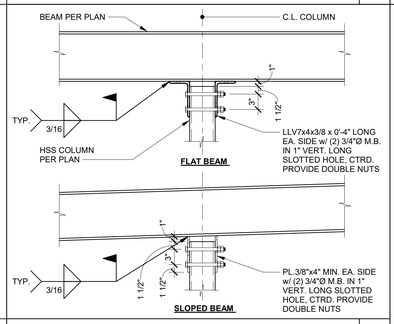

TOP OF COLUMN SUPPORT N.T.S. 17

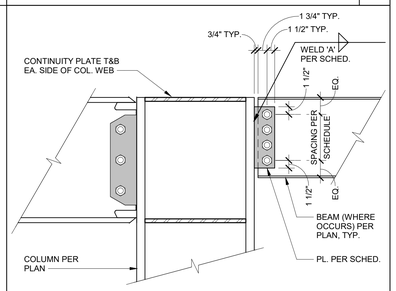

A WIDE FLANGE BEAM TO COLUMN FLANGE

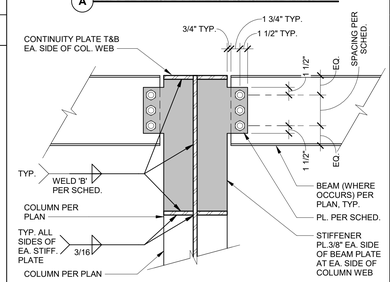

B WIDE FLANGE BEAM TO COLUMN WEB

NOTES:
1. FOR BEAM CONNECTION SCHEDULE, SEE 5/S006
2. FOR MOMENT FRAME CONNECTION (WHERE OCCURS), SEE 5/S007

TYP. BEAM TO WF COLUMN CONN. N.T.S. 19

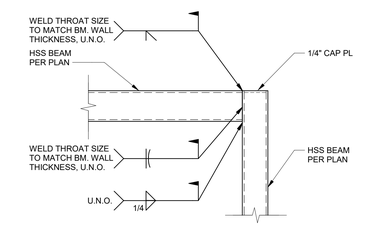

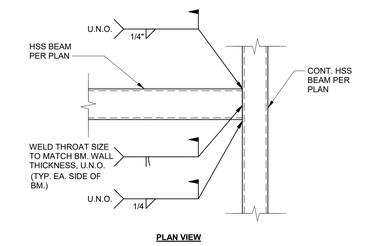

NOTES:
1. HSS DEPTH VARY, TYP.
2. HORIZ. BM.'s SHOWN, SLOPING BM.'s SIM., TYP.
3. SKEWED BM.'s SIM.
4. SINGLE BM. SHOWN, MULTIPLE BM.'s SIM.
5. DECK (WHERE OCCURS) NOT SHOWN

HSS TO HSS CONN. N.T.S. 13

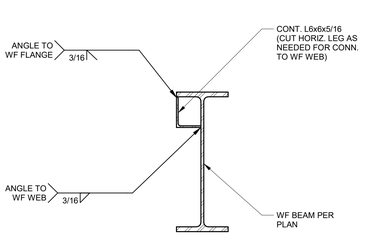

ANGLE TO WF BEAM N.T.S. 14

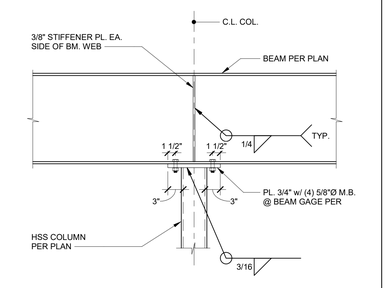

CONTINUOUS STEEL BEAM SUPPORT N.T.S. 9

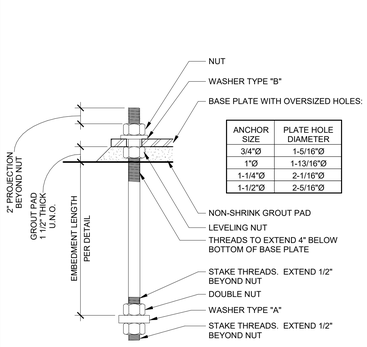

ANCHOR SIZE	PLATE HOLE DIAMETER
3/4"Ø	1-5/16"Ø
1"Ø	1-13/16"Ø
1-1/4"Ø	2-1/16"Ø
1-1/2"Ø	2-5/16"Ø

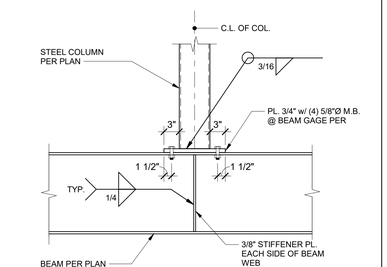

BEAM SUPPORTING HSS COLUMN N.T.S. 10

ANCHOR ROD		WASHER		HEX NUT
SIZE	MATERIAL	TYPE	SIZE	
3/4"Ø	F1554 GRADE 55	A	3"x1/2"x0'-3" PLATE W/ 13/16"Ø HOLE CENTERED	ASTM A563
		B	2"x1/4" PLATE* W/ 13/16"Ø HOLE CENTERED	
1"Ø	F1554 GRADE 55	A	3"x1/2"x0'-3" PLATE W/ 1-1/8"Ø HOLE CENTERED	ASTM A563
		B	3"x3/8" PLATE* W/ 1-1/8"Ø HOLE CENTERED	
1-1/4"Ø	F1554 GRADE 105	A	3"x1/2"x0'-3" PLATE W/ 1-3/8"Ø HOLE CENTERED	ASTM A563
		B	3"x1/2" PLATE* W/ 1-3/8"Ø HOLE CENTERED	
1-1/2"Ø	F1554 GRADE 105	A	4"x4"x0'-1" PLATE W/ 1-5/8"Ø HOLE CENTERED	ASTM A563
		B	3 1/2"x1/2" PLATE* W/ 1-5/8"Ø HOLE CENTERED	

* CIRCULAR OR SQUARE WASHERS MEETING THE WASHER SIZE ARE ACCEPTABLE.

ANCHOR BOLT N.T.S. 5

FOR BID ONLY

Teter, LLP expressly reserves its common law copyright and other property rights in these plans. This document, the ideas and designs incorporated herein, as an instrument of professional service, is not to be used in whole or in part, for any other project without prior written authorization.

MARK	DATE	DESCRIPTION
	11/1/22	DSA BACKCHECK

REGISTERED PROFESSIONAL ENGINEER LUIS A. VALTIERRA No. 55609 STRUCTURAL STATE OF CALIFORNIA

TETER, LLP
FRESNO HEADQUARTERS
VISALIA | BAKERSFIELD | MODESTO | SAN LUIS OBISPO
ARCHITECTS ENGINEERS CONNECTED

TULARE CAMPUS CTE
COLLEGE OF THE SEQUOIAS
4999 E. BARDSLEY AVE.
TULARE, CA

DRAWING TITLE
TYPICAL DETAILS - STEEL

PROJECT NO.
20-12032

DRAWING
S005

PLOT DATE: 10/31/2022 3:24:27 PM

\\tet-file1\Users\luis.valtierra\Documents\12032-S-COS Tulare CTE_luis.valtierra.rvt

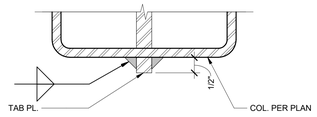

WELD

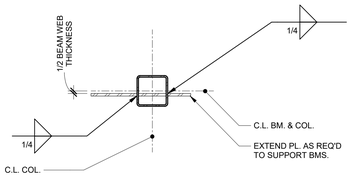

SINGLE THROUGH PLATE

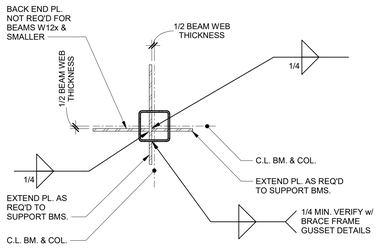

DOUBLE THROUGH PLATE

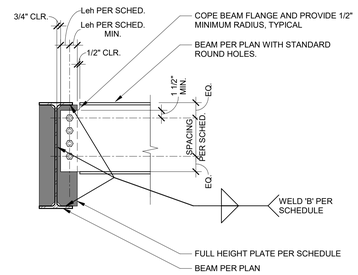

E WF BEAM AT WF BEAM, EQUAL OR SHALLOWER DEPTH

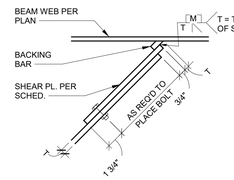

I SKEWED CONNECTION (N.T.S.)

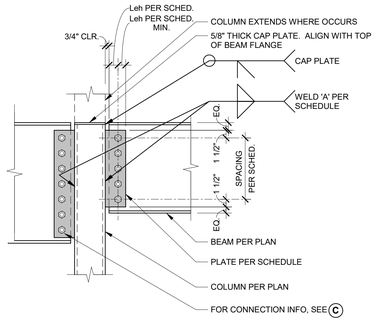

D BEAM TO HSS COLUMN (ON EACH OR MULTIPLE SIDES)

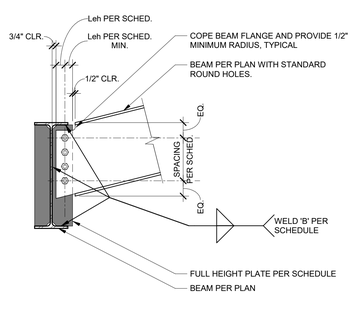

H MAX SKEW 14 DEG. - WF BEAM AT WF BEAM

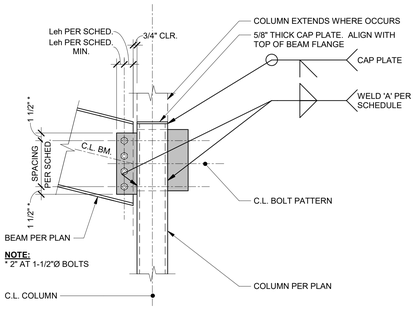

A SLOPED BEAM TO HSS COLUMN

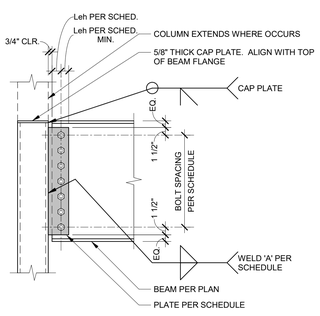

C BEAM TO HSS COLUMN

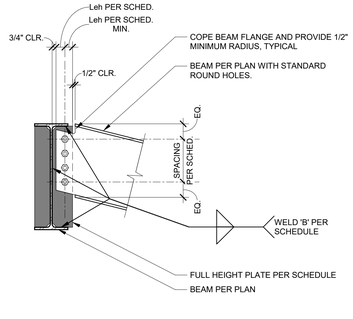

G MAX SKEW 14 DEG. - WF BEAM AT WF BEAM

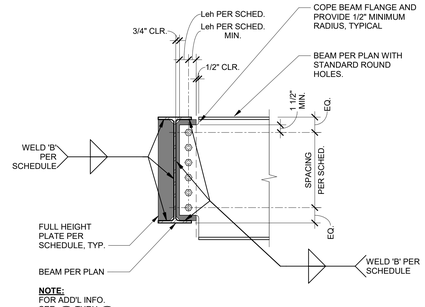

F WF BEAM AT WF BEAM, DEEPER DEPTH

BEAM SIZE	SLIP-CRITICAL CONNECTION SCHEDULE								
	PLATE		WELD SIZE		WELDS		BOLTS		
	DEPTH	THICKNESS	A	B	C	D	NO. & SIZE	SPACING	Leh
W14x	9"	1/2"	5/16	5/16	N/A	N/A	(3) 1"Ø	3"	2"
W16x	12"	1/2"	5/16	5/16	N/A	N/A	(4) 1"Ø	3"	2"

NOTES:
- FOR SINGLE ROW (UNLESS NOTED OTHERWISE)
- ALL BOLTS SHALL BE A490 SC w/ CLASS B FAYING SURFACE (BLAST-CLEANED) U.N.O.
- USE ASTM A36 PLATE
- AT HSS MEMBERS, SLOT COLUMN AND ENTER PL. FROM ABOVE, PROVIDE BACKER BARS & PLUG WELD ALL OPEN SLOTS AFTER CONNECTION PLATES HAVE BEEN INSTALLED.
- GUSSET PLATE SHALL CONTINUE THRU COLUMN.
- WHERE NO GUSSET PLATE, TAB PLATE FOR THE DEEPEST BEAM SHALL CONTINUE THRU THE COLUMN.
- ALL CONNECTIONS SHOWN HERE ARE PART OF THE LATERAL FORCE RESISTING SYSTEM (LFRS) AND SHALL CONFORM TO DEMAND CRITICAL REQUIREMENTS - SEE GENERAL NOTES.
- FOR CONNECTIONS AT WIDE FLANGE COLUMNS, SEE 19/S005

DOUBLE THROUGH PLATE

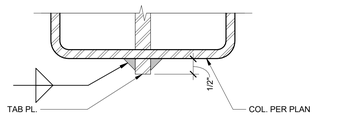

WELD

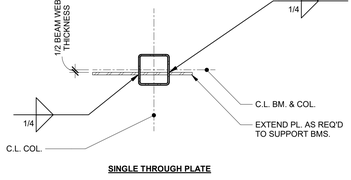

SINGLE THROUGH PLATE

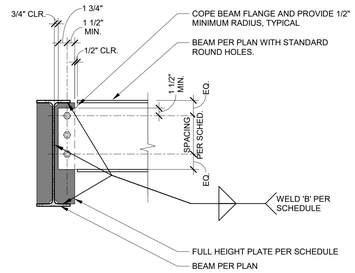

E WF BEAM AT WF BEAM, EQUAL OR SHALLOWER DEPTH

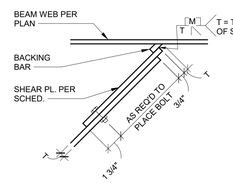

I SKEWED CONNECTION (N.T.S.)

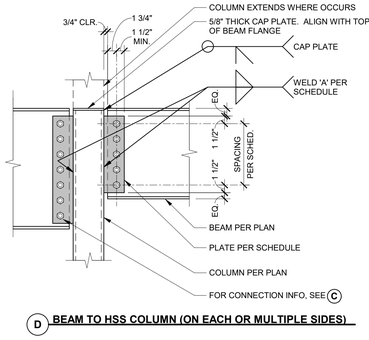

D BEAM TO HSS COLUMN (ON EACH OR MULTIPLE SIDES)

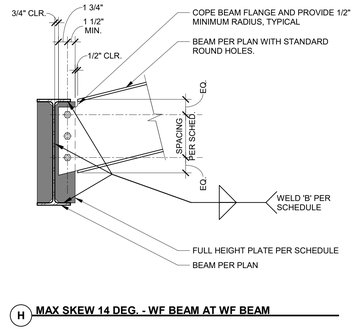

H MAX SKEW 14 DEG. - WF BEAM AT WF BEAM

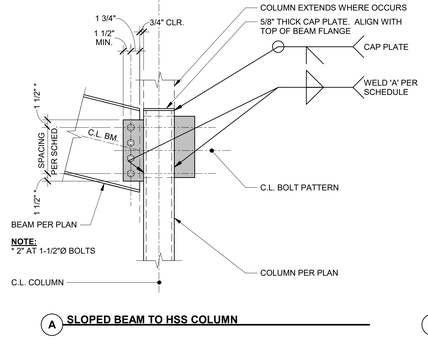

A SLOPED BEAM TO HSS COLUMN

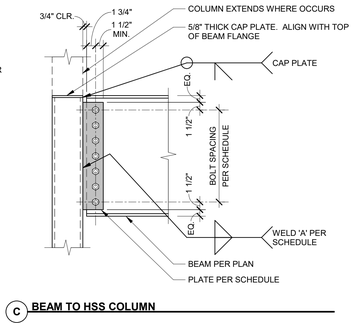

C BEAM TO HSS COLUMN

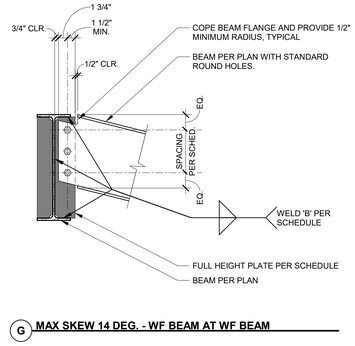

G MAX SKEW 14 DEG. - WF BEAM AT WF BEAM

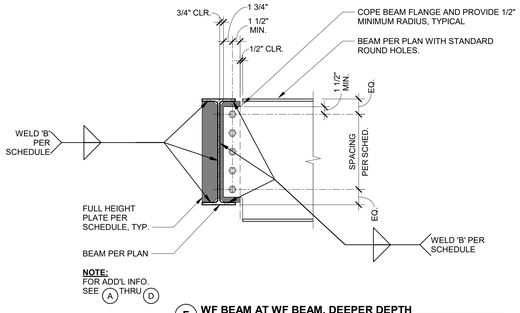

F WF BEAM AT WF BEAM, DEEPER DEPTH

BEAM SIZE	CONNECTION SCHEDULE					
	PLATE		WELD SIZE		BOLTS	
	DEPTH	THICKNESS	A	B	NO. & SIZE	SPACING
W8x, C8x	6"	3/8"	5/16	5/16	(2) 3/4"Ø	3"
W10x	8"	3/8"	5/16	5/16	(2) 3/4"Ø	3"
W12x	9"	3/8"	5/16	5/16	(3) 3/4"Ø	3"
W14x	9"	3/8"	5/16	5/16	(3) 3/4"Ø	3"
W16x	12"	3/8"	5/16	5/16	(4) 3/4"Ø	3"
W18x	15"	3/8"	5/16	5/16	(5) 3/4"Ø	3"
W21x	18"	3/8"	5/16	5/16	(6) 3/4"Ø	3"
W24x	20"	1/2"	3/8	3/8	(7) 7/8"Ø	2-5/8" MIN.
W27x	23"	1/2"	3/8	3/8	(8) 7/8"Ø	2-5/8" MIN.
W30x	26"	1/2"	3/8	3/8	(9) 7/8"Ø	2-5/8" MIN.
W33x	26"	1/2"	3/8	3/8	(9) 7/8"Ø	2-5/8" MIN.

NOTES:
* FOR SINGLE ROW (UNLESS NOTED OTHERWISE).
* ALL BOLTS SHALL BE A325N (U.N.O.)
* USE ASTM A36 PLATES
* SEE DETAIL 20/S006 FOR SLIP-CRITICAL CONNECTIONS (WHERE INDICATED) PER PLAN.

* FOR THROUGH PLATES, TAB PLATE FOR THE DEEPEST BEAM SHALL BE CONTINUOUS THROUGH COLUMN.
* FOR THROUGH PLATES, SLOT COLUMN AND ENTER PL. FROM ABOVE, PROVIDE BACKER BARS AND PLUG WELD ALL OPEN SLOTS AFTER CONNECTION PLATES HAVE BEEN INSTALLED.
* FOR CONNECTIONS AT WIDE FLANGE COLUMNS, SEE 19/S005

FOR BID ONLY

Teter, LLP expressly reserves its common law copyright and other property rights in these plans. This document, the ideas and designs incorporated herein, as an instrument of professional service, is not to be used in whole or in part, for any other project without prior written authorization.

MARK	DATE	DESCRIPTION
	11/1/22	DSA BACKCHECK

REGISTERED PROFESSIONAL ENGINEER * STEVEN S. BAILEY * No. 55609 * STRUCTURAL * STATE OF CALIFORNIA

TETER, LLP
FRESNO HEADQUARTERS
VISALIA I BAKERSFIELD I MODESTO I SAN LUIS OBISPO
ARCHITECTS ENGINEERS CONNECTED
TETER

TULARE CAMPUS CTE
COLLEGE OF THE SEQUOIAS
4999 E. BARDSLEY AVE.
TULARE, CA

DRAWING TITLE
TYPICAL DETAILS - STEEL

PROJECT NO.
20-12032

DRAWING
S006

\\tet-file1\Users\luis.valtierra\Documents\12032-S-COS Tulare CTE_luis.valtierra.rvt

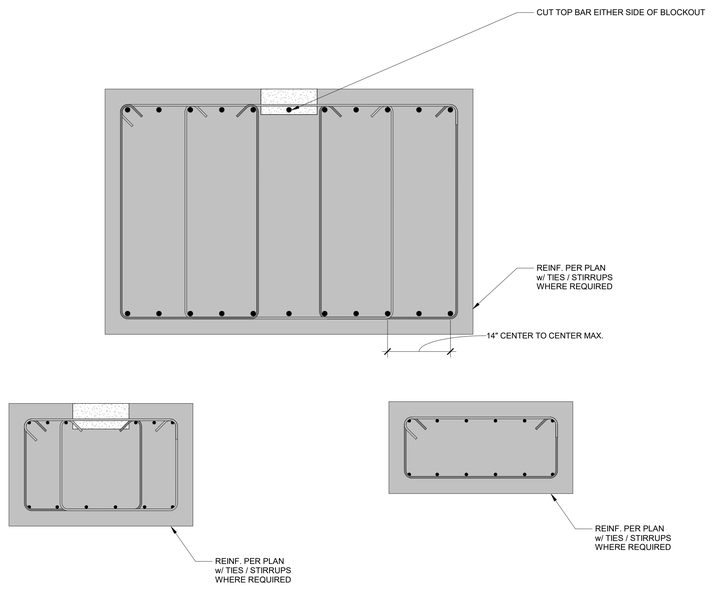

CF REINFORCING

1" = 1'-0" | 17

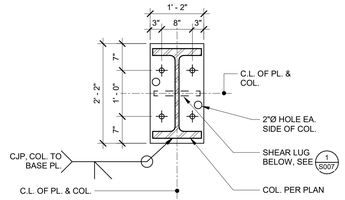

TYPE '3'

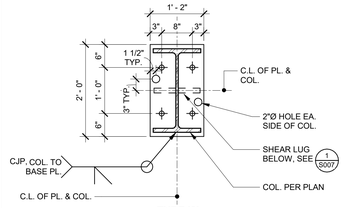

TYPE '2'

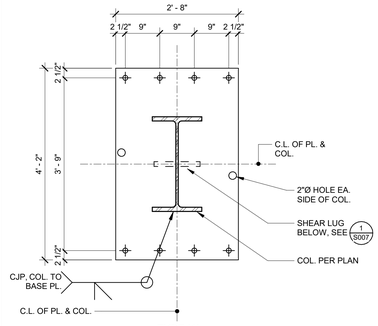

TYPE '1'

MOMENT FRAME COLUMN BASE PLATE SCHEDULE					
TYPE	PL. THICKNESS	PL. MATERIAL	# OF ANCHOR RODS	ANCHOR ROD Ø	EMBED.
1	3"	A572, Gr. 50	8	1-1/2"	1'-8"
2	1-1/2"	A572, Gr. 50	4	1"	1'-8"
3	1-1/2"	A572, Gr. 50	4	1"	1'-8"

1. FOR ANCHOR ROD DETAIL SEE 6/S005

2. FOR CJP BACKING BAR REQUIREMENTS, SEE 5A/S007 NOTE #2. COLUMN TERM USED THERE SHALL REFER TO BASE PLATE, BEAM TERM USED THERE SHALL REFER TO COLUMN

ALL CONNECTIONS SHOWN HERE ARE PART OF THE LATERAL FORCE RESISTING SYSTEM (LFRS) AND SHALL CONFORM TO DEMAND CRITICAL REQUIREMENTS - SEE GENERAL NOTES

WF COLUMN BASE PLATE

N.T.S. | 20

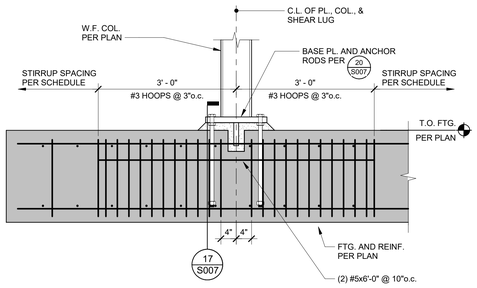

MF BASE PLATE ANCHORAGE REINF.

N.T.S. | 6

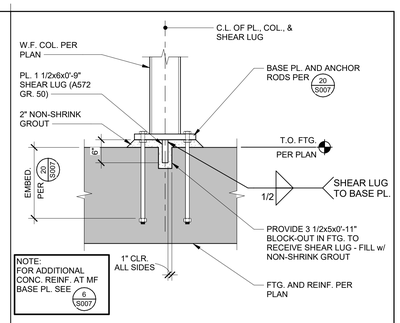

MF BASE PLATE SHEAR LUG

N.T.S. | 1

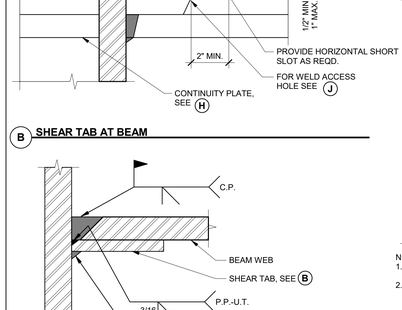

NOTES:
1. COMPLETE PENETRATION GROOVE WELD, EITHER (A) REMOVE WELD BACKING BAR, BACK GOUGE & ADD 5/16" FILLET WELD, OR (B) LEAVE BACKING BAR IN PLACE & ADD 5/16" FILLET UNDER BACKING BAR.
2. COMPLETE PENETRATION GROOVE WELD. REMOVE WELD BACKING BAR, AND PROVIDE REINFORCING FILLET.
   A. IF BACK GOUGED TO SOUND WELD METAL AFTER REMOVAL OF BACKING:
      - FOR FILLET LEG ADJACENT TO COLUMN PROVIDE 5/16" MINIMUM.
      - FOR FILLET LEG ADJACENT TO BEAM FLANGE, THE WIDTH SHALL BE SUCH THAT THE FILLET TOE IS LOCATED ON THE BEAM FLANGE BASE METAL (5/16" MINIMUM).
   B. IF THE BASE METAL AND WELD ROOT ARE GROUND SMOOTH AFTER REMOVAL OF BACKING: THE FILLET LEG ADJACENT TO THE BEAM FLANGE NEED NOT EXTEND TO THE BEAM FLANGE BASE METAL (5/16" MINIMUM).
3. DO NOT WELD (FILLET OR TACK) BACKING BARS TO UNDERSIDE OF BEAM FLANGE.

A BEAM TO COLUMN FLANGE WELD

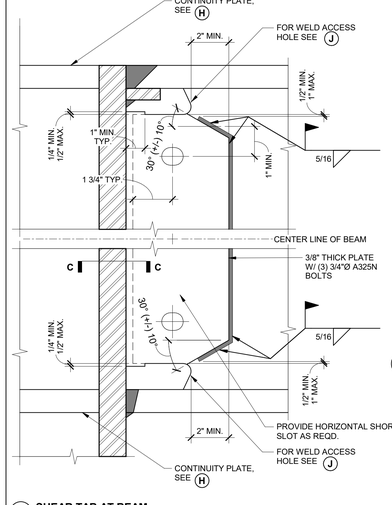

B SHEAR TAB AT BEAM

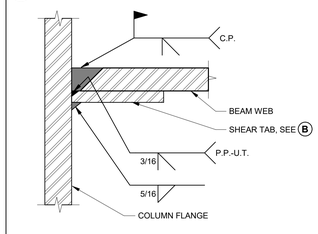

C SHEAR TAB AT BEAM TO COLUMN FLANGE (PLAN)

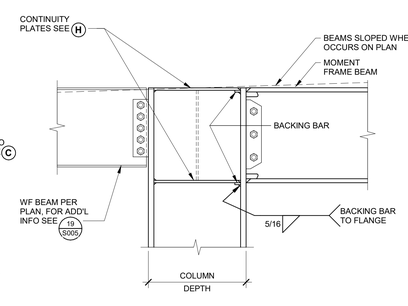

D ELEVATION: MOMENT FRAME BEAM, ONE SIDE OF COLUMN

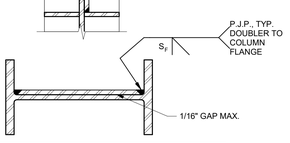

DOUBLER PLATE SCHEDULE - FULL DEPTH				
COLUMN	DOUBLER PLATE	WELD SIZE S_P	WELD SIZE S_F	STEEL
W21x122	5/8"	1/2"	5/8"	A572 GR. 50
W21x132	5/8"	1/2"	5/8"	A572 GR. 50
W21x223	1 1/4"	7/8"	1 1/4"	A572 GR. 50
W24x131	5/8"	1/2"	5/8"	A572 GR. 50
W24x146	5/8"	1/2"	5/8"	A572 GR. 50

NOTES:
1. DOUBLER PLATES ARE REQUIRED AT EVERY MOMENT FRAME.
2. DOUBLER PLATES SHALL BE WELDED TO THE COLUMN FLANGES WITH PARTIAL JOINT PENETRATION GROOVE WELD PER AWS D1.8, CLAUSE 4.3. WELD TO COLUMN FLANGE MAY REQUIRE MULTIPLE WELD PASSES DUE TO LARGE k REGION.
3. DOUBLER PLATES SHALL BE WELDED TO THE CONTINUITY PLATES WITH PARTIAL JOINT PENETRATION GROOVE WELD.
4. FRAMING MEMBERS CONNECTING TO COLUMN WEB, MAY BE WELDED TO DOUBLER PLATE AS REQUIRED.

E DOUBLER PLATE

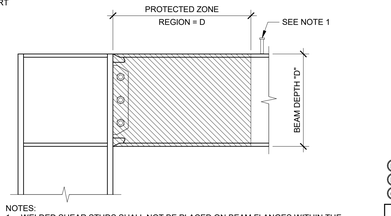

NOTES:
1. WELDED SHEAR STUDS SHALL NOT BE PLACED ON BEAM FLANGES WITHIN THE PROTECTED REGION.
2. CONTRACTOR SHALL VERIFY THAT NO WELDED, BOLTED, SCREWED OR SHOT-IN ATTACHMENTS FOR PERIMETER EDGE ANGLES, EXTERIOR FACADES, PARTITIONS, DUCT WORK, PIPING, OR OTHER CONSTRUCTION OCCUR WITHIN THE PROTECTED REGION.
3. CONTRACTOR SHALL VERIFY THAT THE PROTECTED REGION REMAINS CLEARLY MARKED THROUGHOUT THE ENTIRE CONSTRUCTION PROCESS.
4. ARC-SPOT WELDING OF METAL DECK WITHIN THE PROTECTED REGION IS PERMITTED.
5. CONTRACTOR SHALL NOTIFY THE ENGINEER OF FIELD CONDITIONS IN WHICH REGION IS NOT PROTECTED.

F PROTECTED REGION

NOTE: ALL WELDS ON MOMENT FRAMES ARE PART OF THE LATERAL FORCE RESISTING SYSTEM (LFRS) AND SHALL CONFORM TO DEMAND CRITICAL REQUIREMENTS - SEE GENERAL NOTES

G ELEVATION: MOMENT FRAME COLUMN, BEAM EACH SIDE

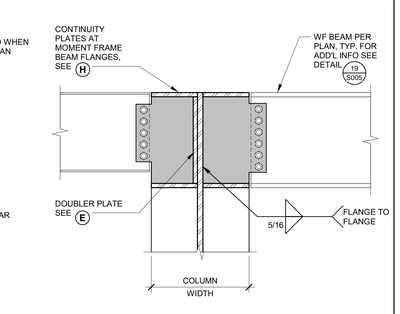

CONTINUITY PLATE SCHEDULE - FULL DEPTH					
COLUMN	PLATE	DIM 'A'	DIM 'B'	WELD SZ. 'C'	STEEL
W21x122	1/2"	3 3/4"	2"	5/16"	A572 GR. 50
W21x132	1/2"	3 3/4"	2 1/16"	5/16"	A572 GR. 50
W21x223	1/2"	4 9/16"	2 3/16"	5/16"	A572 GR. 50
W24x131	1/2"	3 3/4"	2"	5/16"	A572 GR. 50
W24x146	1/2"	3 7/8"	2 1/16"	5/16"	A572 GR. 50
---	---	---	---	---	---
---	---	---	---	---	---

NOTES:
1. ALL CONTINUITY PLATES SHALL EXTEND FULL DEPTH OF COLUMN, MINUS THICKNESS OF COLUMN FLANGES.
2. CONTINUITY PLATES SHALL EXTEND FLUSH WITH COLUMN FLANGE ENDS.
3. REMOVE WELD TABS TO 1/4" MAXIMUM FROM EDGE OF CONTINUITY PLATE. GRIND END OF WELD SMOOTH (500 micro-in), NOT FLUSH. DO NOT GOUGE COLUMN FLANGE.
4. STOP PLATE WELD TO COLUMN WEB 1/4" FROM PLATE NOTCHES.
5. MINIMUM 1/2" RADIUS OF NOTCH TO CLEAR FILLET.
6. WELD TABS SHALL NOT BE USED AT PLATE TO WEB WELDING.
7. DIM 'A' = k + 1 1/2"
8. DIM 'B' = kt + 1/2"

H CONTINUITY PLATES

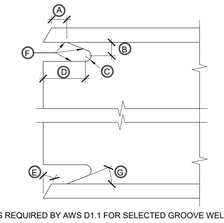

E BEVEL AS REQUIRED BY AWS D1.1 FOR SELECTED GROOVE WELD (30° TYP.).
F SMOOTHNESS REQUIREMENTS AND CUTTING METHODS PER FEMA-353.
G ANGLE SHALL NOT EXCEED 25 DEGREES.

WELD ACCESS HOLE SCHEDULE				
BEAM	A	B	C	D
W24x103	1"	1-1/4"	1/2"	3-1/2"
W27x114	1"	1-1/4"	1/2"	3-1/2"
W30x116	1"	1-1/4"	1/2"	3-1/2"

J WELD ACCESS HOLE

SPECIAL MOMENT RESISTANT FRAME (WUF-W)

3/4" = 1'-0" | 5

PLOT DATE: 10/31/2022 3:24:36 PM

FOR BID ONLY

Teter, LLP expressly reserves its common law copyright and other property rights in these plans. This document, the ideas and designs incorporated herein, as an instrument of professional service, is not to be used in whole or in part, for any other project without prior written authorization.

MARK	DATE	DESCRIPTION
	11/1/22	DSA BACKCHECK

REGISTERED PROFESSIONAL ENGINEER * STEVEN S. BAILEY * No. 55609 * STRUCTURAL * STATE OF CALIFORNIA

TETER, LLP
FRESNO HEADQUARTERS
VISALIA | BAKERSFIELD | MODESTO | SAN LUIS OBISPO
ARCHITECTS ENGINEERS CONNECTED

TETER

TULARE CAMPUS CTE
COLLEGE OF THE SEQUOIAS
4999 E. BARDSLEY AVE.
TULARE, CA

DRAWING TITLE
TYPICAL DETAILS - MOMENT FRAME

PROJECT NO.
20-12032

DRAWING
S007

\\tet-file1\Users\luis.valtierra\Documents\12032-S-COS Tulare CTE_luis.valtierra.rvt

PLOT DATE: 10/31/2022 3:24:39 PM

NOTE: FOR ROOF DECK SCHEDULE SEE 2/S008

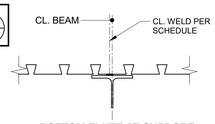

BOTTOM FLUTE AT SUPPORT

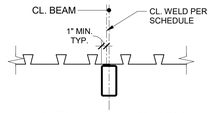

BOTTOM FLUTE AT SUPPORT

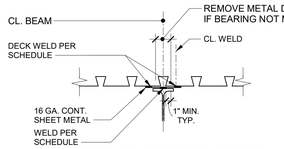

BOTTOM FLUTE OUTSIDE SUPPORT

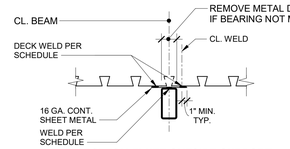

BOTTOM FLUTE OUTSIDE SUPPORT

STEEL DECK TO BEAM (DOVETAIL) N.T.S. 16

NOTE: FOR ROOF DECK SCHEDULE SEE 2/S008

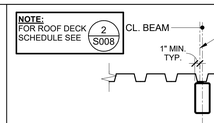

BOTTOM FLUTE AT SUPPORT

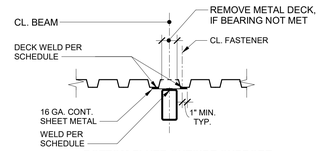

BOTTOM FLUTE OUTSIDE SUPPORT

STEEL DECK TO BEAM N.T.S. 17

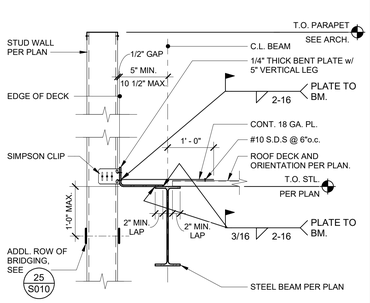

ROOF EDGE CONDITION N.T.S. 18

NOTE: FOR ROOF DECK SCHEDULE SEE 2/S008

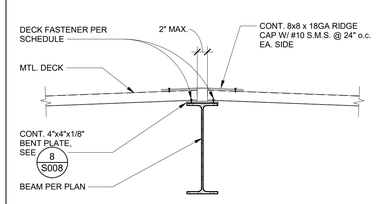

VERCO DOVETAIL 2.0D

SLOPE 3/8:12

TYP. MTL. DECK AT RIDGE N.T.S. 13

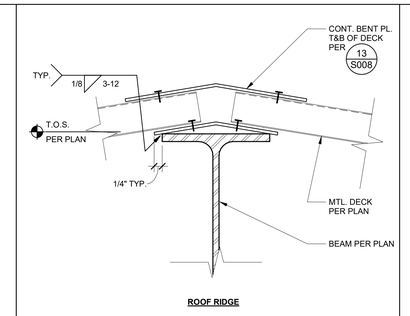

ROOF RIDGE

TYP. MTL. DECK AT RIDGE N.T.S. 8

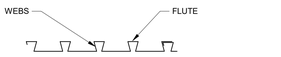

VERCO DOVETAIL 2.0D

PENETRATION SCHEDULE	
OPENING SIZE	REINFORCING PLATE
UP TO 6"	NOT REQUIRED IF UP TO 1 WEB IS CUT 18 GA. IF 2 WEBS ARE CUT
6" TO 8"	18 GA.
8" TO 12"	16 GA.

NOTE: SOLID STRUT WITHOUT HS IS ALSO ACCEPTABLE. SUBCONTRACTOR TO DRILL OWN HOLES WHERE REQUIRED.

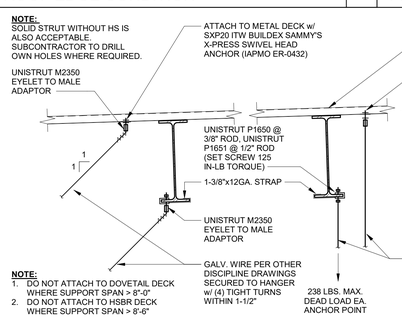

NOTE:
1. DO NOT ATTACH TO DOVETAIL DECK WHERE SUPPORT SPAN > 8'-0"
2. DO NOT ATTACH TO HSBR DECK WHERE SUPPORT SPAN > 8'-6"

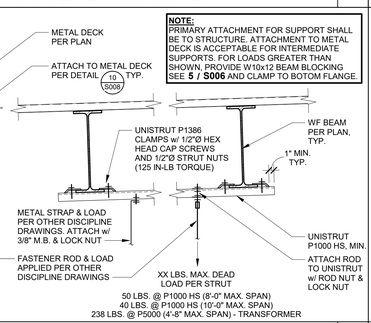

NOTE: PRIMARY ATTACHMENT FOR SUPPORT SHALL BE TO STRUCTURE. ATTACHMENT TO METAL DECK IS ACCEPTABLE FOR INTERMEDIATE SUPPORTS. FOR LOADS GREATER THAN SHOWN, PROVIDE W10x12 BEAM BLOCKING SEE **5 / S006** AND CLAMP TO BOTOM FLANGE.

50 LBS. @ P1000 HS (8'-0" MAX. SPAN)
40 LBS. @ P1000 HS (10'-0" MAX. SPAN)
238 LBS. @ P5000 (4'-8" MAX. SPAN) - TRANSFORMER

MISCELLANEOUS HANGING CONNECTIONS N.T.S. 14

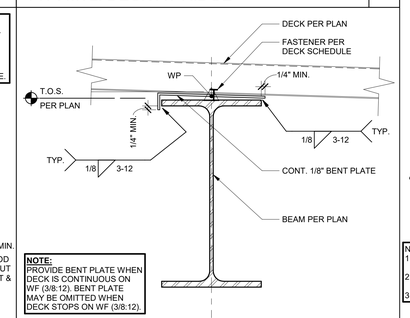

NOTE: PROVIDE BENT PLATE WHEN DECK IS CONTINUOUS ON WF (3/8:12). BENT PLATE MAY BE OMITTED WHEN DECK STOPS ON WF (3/8:12).

SLOPED DECK TO BEAM N.T.S. 9

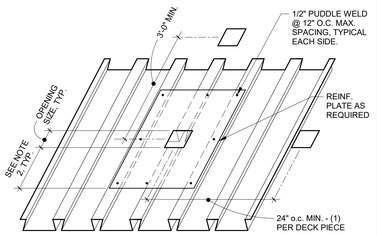

NOTES:
1. DETAIL APPLIES TO ROOF DECK PENETRATIONS ONLY & OPENINGS UP TO 12".
2. EXTEND PLATE 12" MINIMUM BEYOND EDGE OF OPENING, TYPICAL ALL SIDES.
3. MAXIMUM OF (2) WEBS MAY BE CUT.

PLATE REINFORCED DECK OPENING N.T.S. 4

NOTE: TABS MAY BE OMITTED AND WELD L4x DIRECTLY TO OTHER SUPPORT MEMBERS.

SECTION

MISC HANGING CONNECTIONS N.T.S. 15

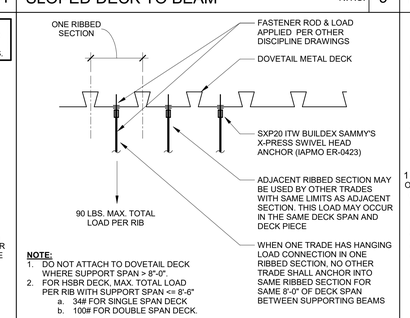

NOTE:
1. DO NOT ATTACH TO DOVETAIL DECK WHERE SUPPORT SPAN > 8'-0"
2. FOR HSBR DECK, MAX. TOTAL LOAD PER RIB WITH SUPPORT SPAN <= 8'-6"
   a. 34# FOR SINGLE SPAN DECK
   b. 100# FOR DOUBLE SPAN DECK.

MISCELLANEOUS HANGING LOAD N.T.S. 10

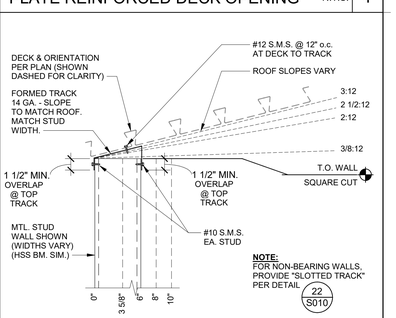

NOTE: FOR NON-BEARING WALLS, PROVIDE "SLOTTED TRACK" PER DETAIL 22/S010

FORMED TRACK N.T.S. 5

ROOF DECK						
DECK			ATTACHMENT			
MARK	PROFILE	GAGE	⊥ TO DECK	∥ TO DECK	SIDE LAPS	REMARKS
B	VERCO HSBR-30-NS	20	4 SCREW PATTERN	SCREWS @ 18" O.C.	VSC2 @ 24" O.C.	COMPLY W/ IAPMO UES REPORT ES-2018 (ISSUED 07/2019, REVISED 6/2022)
D	VERCO 2.0D DOVETAIL	20	4 SHOT PIN PATTERN	SHOT PIN @ 24" O.C.	#12 SCREWS @ 18" O.C.	COMPLY W/ IAPMO UES REPORT ES-0423 (ISSUED 03/2017, REVISED 03/2022)

NOTES:
1. WHEREVER POSSIBLE, DECK LAYOUTS SHALL PROVIDE SHEETS OF SUFFICIENT LENGTH TO CONTINUOUS SPAN AT LEAST THREE SPANS. ENDS SHALL TERMINATE OVER A SUPPORT PERP. TO THE DECK SPAN, EXCEPT AT OPENINGS OR BUILDING EDGES WHERE DECKS MAY BE CANTILEVERED.
2. DECK SHALL HAVE A MINIMUM OF 2" BEARING AT ALL SUPPORTING MEMBERS PERPENDICULAR TO DECK SPAN AND 2" AT ALL MEMBERS PARALLEL TO DECK SPAN, AT ENDS OF DIAPHRAGM EDGES, DECK SHALL BEAR FULL WIDTH OF BEARING MEMBERS AS SHOWN IN DETAILS. SUPPORT PLATES AND CONN. SHALL BE PROVIDED BY DECKING CONTRACTOR WHERE DETAIL AS SHOWN IS NOT ACHIEVED.
3. WHERE TWO ADJACENT DECK SHEETS ARE SUPPORTED BY ONE FRAMING MEMBER, EACH SHEET SHALL INDIVIDUALLY SATISFY THE REQUIREMENTS OF NOTE 2 AND OF THE ATTACHMENT SCHEDULE.
4. DO NOT SUSPEND PIPING, MAIN LINE CONDUITS OR OTHER UTILITIES FROM METAL DECK ALONE. FIRE SPRINKLER BRANCH LINES, AND PIPING/CONDUIT/DUCT INTERMEDIATES SUPPORTS MAY BE SUPPORTED FROM THE DECK. SUSPENDED T-BAR CEILING WITH LIGHT FIXTURES AND SOFFIT FRAMING ARE ACCEPTABLE.
5. DECK ATTACHMENTS TO STRUCTURAL MEMBERS, AS SCHEDULED, INSTALL WELDS PER MANUFACTURERS REQUIREMENTS. FOR SCREWS SEE NOTE #7. USE WELDS AS FOLLOWS:
   A. SPOT PUDDLE WELDS FOR FIELD ASSEMBLY OF STEEL DECKING MUST HAVE A MINIMUM FUSION AREA MEASURING 1/2" IN DIAMETER OR 3/8" WIDE BY 1" LONG
   B. SEAM WELDS MUST BE A MINIMUM OF 1-1/2" LONG
6. FOR SHOT PIN ATTACHMENT AS SCHEDULED, USE:
   a. HILTI X-EDNK22 AT SUPPORTS 1/8" TO 1/4" THICK
   b. HILTI X-HSN24 AT SUPPORTS 1/8" TO 3/8" THICK
   c. HILTI X-ENP19 AT SUPPORTS 1/4" AND THICKER
   d. PNEUTEK SDK61 AT SUPPORTS 0.113 TO 0.155" THICK
   e. PNEUTEK SDK63 AT SUPPORTS 0.155" TO 0.25" THICK
   f. PNEUTEK K64 AT SUPPORTS 0.187" TO 0.312" THICK
   g. PNEUTEK K66 AT SUPPORTS 0.281" AND THICKER
   NOTE: DIAPHRAGM DESIGN BASED ON HILTI SHOT PINS. PNEUTEK SHOT PINS MAY BE USED IN LIEU OF HILTI SHOT PIN.
7. FOR SCREW ATTACHMENT, PROVIDE SDI RECOGINZED #12 (5 PT.) SELF DRILLING SELF TAPPING SCREWS. PROVIDE NEOPRENE WASHERS AT EXTERIOR EXPOSURES.

ROOF DECK SCHEDULE N.T.S. 2

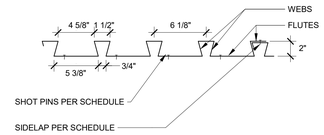

DECK PROPERTIES					
TYPE	GAGE	+I (IN^4)	-I (IN^4)	+S (IN^3)	-S (IN^3)
2.0D	20	0.472	0.447	0.343	0.334

NOTES:
1. ASTM A 653 SS GRADE 40 WITH G60 GALVANIZED FINISH. 40,000 PSI YIELD STRENGTH.

VERCO 2.0D DOVETAIL

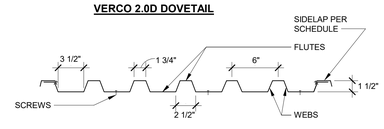

DECK PROPERTIES					
TYPE	GAGE	+I (IN^4)	-I (IN^4)	+S (IN^3)	-S (IN^3)
HSBR-30-NS	20	0.231	0.219	0.237	0.230

NOTES:
1. ASTM A 653 SS GRADE 50 WITH G90 GALVANIZED FINISH. 50,000 PSI YIELD STRENGTH.

VERCO PLB-36

FOR BID ONLY

Teter, LLP expressly reserves its common law copyright and other property rights in these plans. This document, the ideas and designs incorporated herein, as an instrument of professional service, is not to be used in whole or in part, for any other project without prior written authorization.

MARK	DATE	DESCRIPTION
	11/1/22	DSA BACKCHECK

REGISTERED PROFESSIONAL ENGINEER S. BAILEY No. 55609 STRUCTURAL STATE OF CALIFORNIA

TETER, LLP
FRESNO HEADQUARTERS
VISALIA | BAKERSFIELD | MODESTO | SAN LUIS OBISPO
ARCHITECTS ENGINEERS CONSULTANTS
TETER

TULARE CAMPUS CTE
COLLEGE OF THE SEQUOIAS
4999 E. BARDSLEY AVE.
TULARE, CA

DRAWING TITLE
TYPICAL DETAILS - METAL DECK

PROJECT NO.
20-12032

DRAWING
S008

\\tet-file1\Users\luis.valtierra\Documents\12032-S-COS Tulare CTE_luis.valtierra.rvt
16" 12" 8" 4" 0"

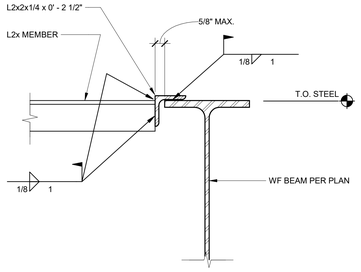

FRAMING AT ROOF DECK OPENING N.T.S. 16

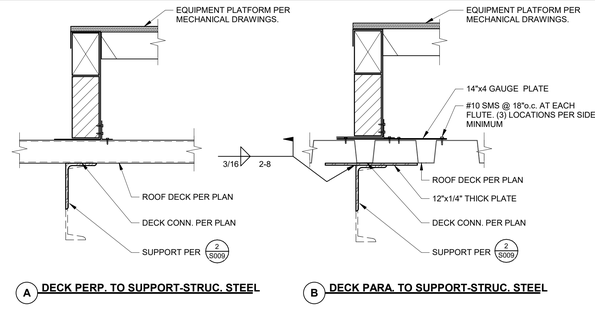

A DECK PERP. TO SUPPORT-STRUC. STEEL

B DECK PARA. TO SUPPORT-STRUC. STEEL

MECHANICAL PLATFORM SUPPORT N.T.S. 6

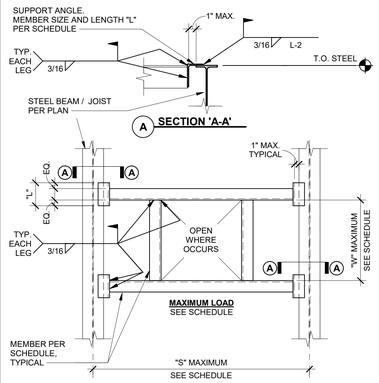

MEMBER SCHEDULE				
SPACING "S"	WIDTH "W"	MEMBER SIZE	LENGTH "L"	MAXIMUM LOAD
10'-0"	6'-0"	LLV6x4x5/16	0'-6"	600 LBS
12'-0"	8'-0"	L6x6x1/2	1'-0"	2,000 LBS

NOTES:
1. FOR HOLES 12"x12" OR SMALLER SEE 1/S008
2. SUPPORTED EQUIPMENT SHALL NOT EXCEED THE MAXIMUM LOAD SPECIFIED.
3. SUPPORTED EQUIPMENT MAY BE PLACED AT ANY LOCATION BETWEEN ROOF MEMBERS. WHERE EQUIPMENT IS POSITIONED ABOVE ROOF MEMBER, PROVIDE FRAMING AS SHOWN ON EACH SIDE. CLIP SUPPORT ANGLES AT CENTERLINE OF BEAM WHERE REQUIRED.
4. WHERE MECHANICAL UNIT CURB SUPPORT IS REQUIRED, SEE DETAIL 14/S009
5. WHERE MECHANICAL PLATFORM IS REQUIRED, SEE 6/S009
6. AT ROOF ACCESS HATCH OPENINGS, PROVIDE C12x20.7 ON ALL SIDES
7. AT ACCESS HATCH OPENINGS, PROVIDE 1/4" PLATE & 14 GA. PLATE w/ CORRESPONDING CONN. PER "C" ON 14/S009 & "D" 14/S009

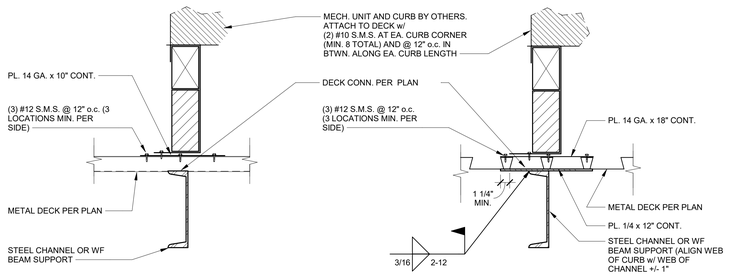

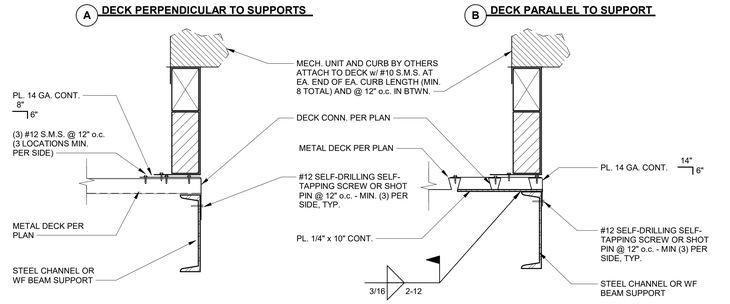

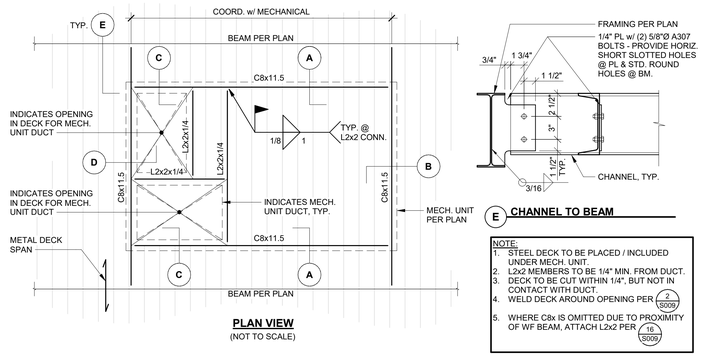

NOTE:
1. STEEL DECK TO BE PLACED / INCLUDED UNDER MECH. UNIT.
2. L2x2 MEMBERS TO BE 1/4" MIN. FROM DUCT.
3. DECK TO BE CUT WITHIN 1/4", BUT NOT IN CONTACT WITH DUCT.
4. WELD DECK AROUND OPENING PER 2/S008
5. WHERE C8x IS OMITTED DUE TO PROXIMITY OF WF BEAM, ATTACH L2x2 PER 15/S009

TYP. MECH CURB ATTACHMENT AT METAL DECK N.T.S. 14

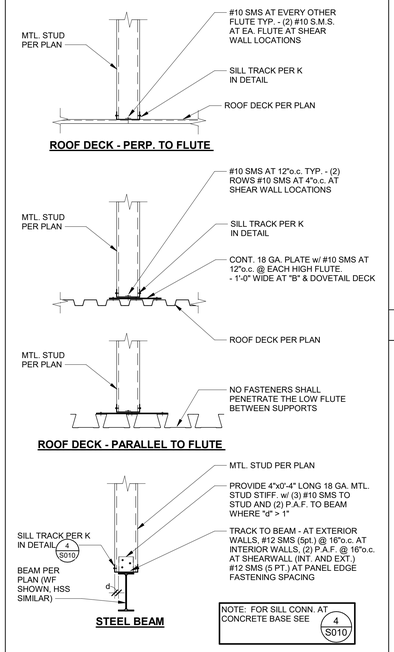

NOTE: FOR SILL CONN. AT CONCRETE BASE SEE 4/S010

LIGHT GAUGE SILL CONNECTION N.T.S. 8

FRAMING AT ROOF DECK OPENING N.T.S. 2

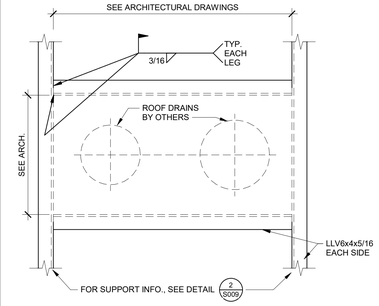

ROOF DRAIN DECK OPENING N.T.S. 3

Teter, LLP expressly reserves its common law copyright and other property rights in these plans. This document, the ideas and designs incorporated herein, as an instrument of professional service, is not to be used in whole or in part, for any other project without prior written authorization.

MARK	DATE	DESCRIPTION
	11/1/22	DSA BACKCHECK

FOR BID ONLY

REGISTERED PROFESSIONAL ENGINEER * LUIS A. VALTIERRA * No. 55606 * STRUCTURAL * STATE OF CALIFORNIA

TETER, LLP
FRESNO HEADQUARTERS
VISALIA | BAKERSFIELD | MODESTO | SAN LUIS OBISPO
ARCHITECTS ENGINEERS CONNECTED

TULARE CAMPUS CTE
COLLEGE OF THE SEQUOIAS
4999 E. BARDSLEY AVE.
TULARE, CA

DRAWING TITLE
TYPICAL DETAILS - METAL DECK

PROJECT NO.
20-12032

DRAWING
S009

PLOT DATE: 10/31/2022 3:24:43 PM

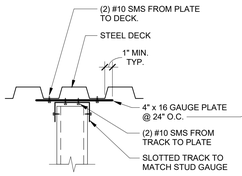

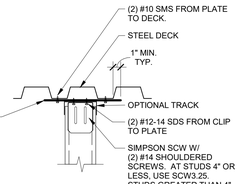

WALL PARALLEL TO DECK

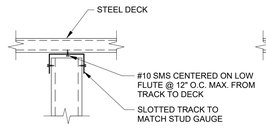

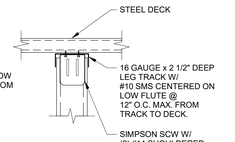

WALL PERPENDICULAR TO DECK

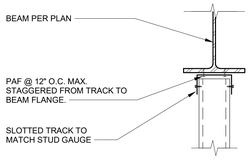

WALL PARALLEL TO BEAM

NOTE:
1. "SLOTTED TRACK" SHALL BE 2 1/2" DEEP STEEL TRACK W/ 1/4" x 1 1/2" VERTICAL SLOTS. AT STUD CONNECTION, PROVIDE #8 9/16" WAFER HEAD SCREW EACH SIDE CENTERED IN SLOT. TOP OF STUD SHALL MAINTAIN 3/4" CLEARANCE FOR MOVEMENT.
2. FOR SEALANTS/BARRIERS ABOVE TOP TRACK SEE ARCH. DWGS. (i.e. ACOUSTIC, FIRE RATED WALLS)
3. FASTENERS SHALL NOT BE ATTACHED THROUGH THE SLOTTED TRACK IN A MANNER THAT WILL IMPAIR MOVEMENT.
4. SLOTTED TRACK: SCAFCO STEEL STUD COMPANY IAPMO 0283.
5. FOR SLOPED ROOFS:
   A. PROVIDE 'SLOTTED PITCHED TRACK' AT WALLS PERPENDICULAR TO SLOPE.
   B. PROVIDE 'SLOTTED RAKE TRACK' AT WALLS PARALLEL TO SLOPE.

NON-BEARING TOP OF WALL CONNECTION

1 1/2" = 1'-0" | 22

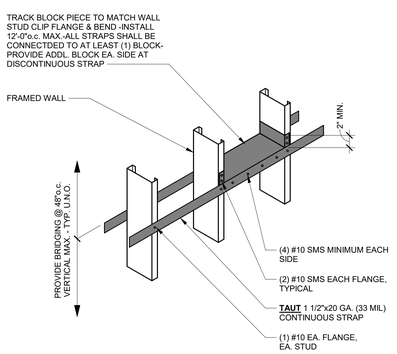

1 TYPE 1 BRIDGING - DOUBLE FLAT STRAP WITH BLOCKING

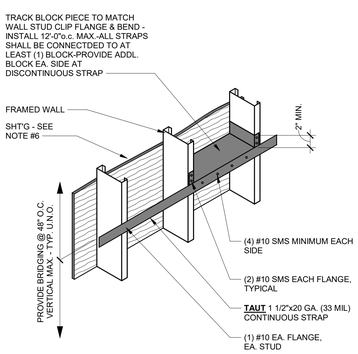

3 TYPE 3 BRIDGING - SHEATHING WITH SINGLE FLAT STRAP
(NOT ALLOWED AT BEARING WALLS)

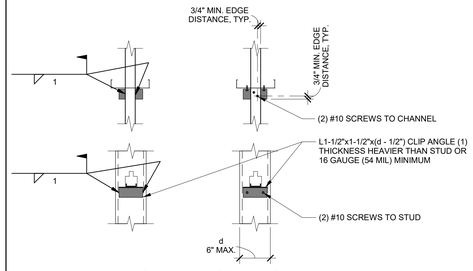

WELDED ANGLE | SCREWED ANGLE

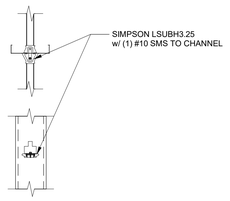

SIMPSON CLIP

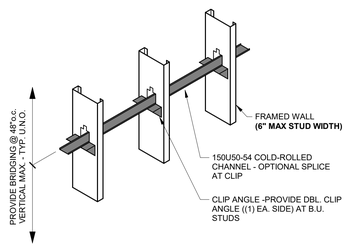

2 TYPE 2 BRIDGING - COLD-ROLLED CHANNEL WITH CLIP ANGLE

NOTES:
1. PROVIDE BRIDGING ON ALL WALL STUDS EXCEPT NON-BEARING WALLS WITH QUALIFIED SHEATHING PER NOTE #6 ON BOTH SIDES OF WALL.
2. USE ONLY TYPE 1 OR TYPE 2 BRIDGING FOR BEARING WALLS (SUPPORTING ROOFS, FLOORS, MEZZANINE, ETC.)
3. INSTALL ALL BRIDGING PRIOR TO INSTALLATION OF SUPPORTED FRAMING.
4. FOR ADDITIONAL INFORMATION SEE (4 / S010)
5. TYPE 2 BRIDGING NOT ALLOWED ON STUDS GREATER THAN 6" DEEP.
6. QUALIFIED SHEATHING SHALL BE GWB, GYPSHEATHING, PLYWOOD, OR OSB, ONLY.

STUD BRIDGING

1" = 1'-0" | 25

WALL FRAMING SCHEDULE (14)

	HEIGHT *	WALL TYPE	WALL STUDS	OPENING WIDTH	BOX HEADER (15) DBL. JOIST	BOX HEADER (15) TRACK	JAMB STUDS	OPENING SILL TRACK	NO. #10 SMS AT HEADER HANGER
EXTERIOR	"A"	8" STUD	800S162-43 @ 16" o.c.	0'-0" TO 6'-0"	800S162-43	800T125-33	(2) 800S200-54	800T125-43	(12)
	"B"	8" STUD	800S200-54 @ 16" o.c.	0'-0" TO 4'-0"	800S162-33	800T125-33	(2) 800S200-54	800T125-43	(8)
				4'-1" TO 6'-0"	800S162-43	800T125-33	(2) 800S250-54	800T125-43	(12)
				6'-1" TO 8'-0"	800S162-43	800T125-43	(2) 800S300-97	800T125-54	(16)
	"C"	6" STUD	600S162-43 @ 16" o.c.	----	----	----	----	----	----
	"D"	6" STUD	600S250-54 @ 16" o.c.	----	----	----	----	----	----
INTERIOR	0'-0" TO 12'-0"	4" STUD	400S162-33 @ 16" o.c.	----	----	----	----	----	----
	0'-0" TO 24'-3"	6" STUD**	600S162-33 @ 16" o.c.	0'-0" TO 6'-0"	600S162-33	600T125-33	(2) 600S162-33	600T125-33	(8)
				6'-1" TO 8'-0"	600S162-54	600T125-43	(2) 600S162-43	----	(12)
	0'-0" TO 24'-3"	8" STUD	800S162-33 @ 16" o.c.	0'-0" TO 6'-0"	800S162-33	800T125-33	(2) 800S162-33	800T125-33	(16)
				6'-1" TO 16'-0"	1000S250-43	1000T125-54	(2) 800S250-43	----	(24)

* SEE TYPICAL WALL SECTION (A) FOR EXTERIOR WALLS DESIGNATED BY LOCATION TYPE "X".

** AT INTERIOR PLATFORMS, WHERE JOISTS BEAR ON TOP OF STUD WALLS, PROVIDE WALL STUDS @ 12" o.c. TO MATCH JOIST SPACING AND ALIGN/BEAR ALL JOISTS WITH WALL STUDS FOR DIRECT BEARING/CONNECTIONS. FOR ADDITIONAL INFO SEE (25 / S011)

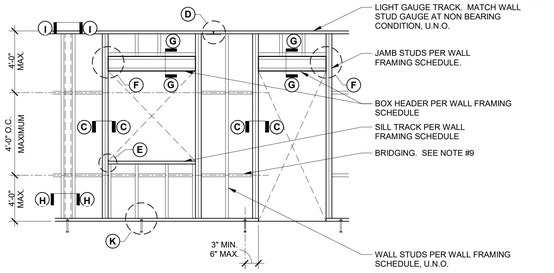

B TYPICAL WALL ELEVATION

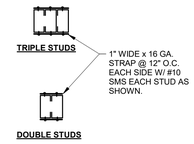

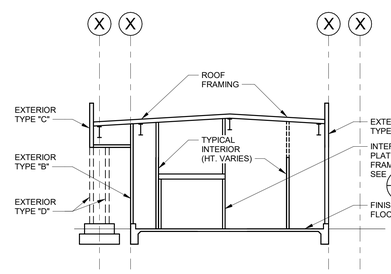

A TYPICAL WALL TYPE SECTION

NOTES:
1. ALL BEARING & NON-BEARING METAL STUD WALLS SHALL BE PER WALL FRAMING SCHEDULE UNLESS NOTED OTHERWISE. FOR WALL TYPE AND LOCATION SEE ARCHITECTURAL DRAWINGS.
2. ALL SECTION SHALL BE MANUFACTURED IN ACCORDANCE WITH THE LATEST A.I.S.I. SPECIFICATION AND MEET THE FOLLOWING THICKNESS REQUIREMENTS:

MILS/GAUGE SCHEDULE		
MILS	MINIMUM THICKNESS	GAUGE
30	0.0312"	20
33	0.0346"	20
43	0.0451"	18
54	0.0566"	16
68	0.0713"	14
97	0.1017"	12

3. BENT, KINKED, DISTORTED, OR DAMAGED SECTIONS SHALL NOT BE USED.
4. STUDS MAY HAVE FACTORY WEB PUNCHOUTS U.N.O. AT 24" O.C. ALONG CENTERLINE OF WEB WITH A MAXIMUM WIDTH = HALF THE MEMBER DEPTH (@2) OR 2 1/2" WHICHEVER IS LESS, AND A MAXIMUM LENGTH = 4 1/2". PUNCHOUTS SHALL NOT BE CLOSER THAN 10" FROM SECTION ENDS. SEE ARCHITECTURAL DRAWINGS FOR UNPNCHED STUD REQUIREMENTS AT ACOUSTICAL WALLS.
5. SECTION PROPERTIES ARE BASED UPON THE "STEEL STUD MANUFACTURERS ASSOCATION" (SSMA) CATALOG OF PARTICIPATING PRODUCERS.
6. ALL STUDS AND JAMBS SHALL BE FULL-HEIGHT OF BUILDING, U.N.O.
7. FOR SIZES OF OPENINGS AND ELEVATION TO BOTTOM/TOP OF OPENINGS, SEE ARCHITECTURAL PLANS
8. ALL JAMBS, HEADERS AND WINDOW SILLS SHALL BE AS NOTED IN SCHEDULE.
9. PROVIDE BRIDGING PER DETAIL (25 / S010)
10. ALL PARAPETS SHALL BE CAPPED WITH A LIGHT GAUGE TRACK MATCHING STUD GAUGE AND THICKNESS.
11. WHERE NON-BEARING WALLS EXTEND TO STRUCTURE, SEE (22 / S010)
12. ALL WELDS SHALL BE 1/8" FILLET MAXIMUM. FOR MATERIALS THINNER THAN 0.15", EFFECTIVE THROAT SHALL NOT BE LESS THAN THINNEST MATERIAL. WELD IN ACCORDANCE WITH "STRUCTURAL WELDING CODE - SHEET METAL" AWS D1.3.
13. SCREWS SHALL BE THREAD-FORMING OR THREAD-CUTTING, WITH OR WITHOUT A SELF DRILLING POINT. SCREWS SHALL BE INSTALLED AND TIGHTENED IN ACCORDANCE WITH THE MANUFACTURER'S RECOMMMENDATION. MINIMUM SPACING IS THREE SCREW DIAMETERS. A MINIMUM OF (3) THREADS SHALL BE ENGAGED.
14. USE LOW PROFILE HEAD SCREWS AT ALL LOCATIONS THAT HAVE GYPSUM BOARD FINISH.
15. USE UNPUNCHED STUDS FOR ALL BOX HEADERS.
16. WALL STUDS LISTED IN THE WALL FRAMING SCHEDULE SHALL BE USED, UNLESS NOTED OTHERWISE. SEE PLANS AND SPECIFIC DEATILS FOR ADDITIONAL REQUIREMENTS.
17. WHERE MEMBERS ATTACH DIRECTLY TO STRUCTURAL STEEL, PROVIDE #12 S.M.S. IN LIEU OF #10 S.M.S. SPECIFIED. PROVIDE SAME QUANTITY.

C JAMB STUDS

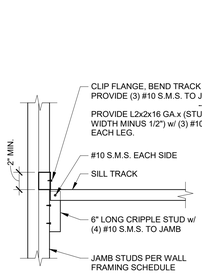

E SILL CONNECTION

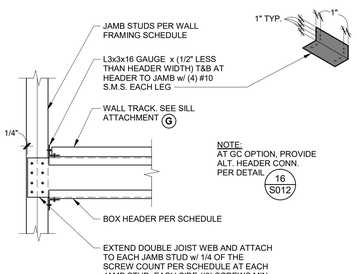

NOTE:
AT GC OPTION, PROVIDE ALT. HEADER CONN. PER DETAIL (16 / S012)

F HEADER CONNECTION

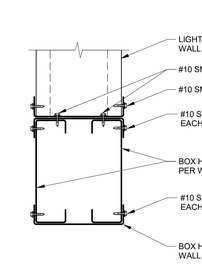

D TRACK SPLICE

G BOX HEADER

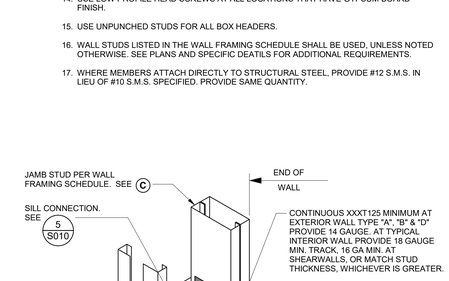

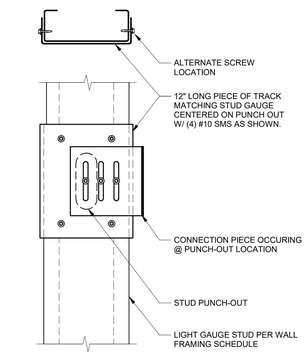

J CONNECTION AT STUD PUNCH-OUT

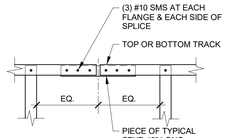

NOTE: CONNECTION OF BOTTOM TRACK SHOWN. CONNECTION TO TOP TRACK SAME AT BEARING WALLS ONLY. AT NON-BEARING WALLS PROVIDE SLIP CONNECTION AS DETAILED.

PROVIDE SEALER GASKET PER PROJECT MANUAL AT EXTERIOR WALLS. FOR SEALANTS/BARRIERS AT INT. WALLS SEE ARCH. DRAWINGS (i.e. ACOUSTIC, FIRE RATED WALLS, etc.)

- AT INT. STRUCT. & EXT. WALLS L3x3x16 GA. x (1/2" LESS THAN STUD WIDTH) w/ (4) #10 SCREWS TO JAMB & 1/2"Ø HILTI KWIKBOLT TZ2 w/ 9/16"Ø HOLE IN ANGLE & 2x2x3/16 PL. WASHER EMBED 3-1/4" MIN.
- AT EXT. WALLS, PROVIDE (2) CLIPS (1) EA. SIDE OF JAMB STUD.

1" CENTERED 1" CENTERED

JAMB STUD PER WALL FRAMING SCHEDULE. SEE (C)

#10 SCREW EACH STUD, TYPICAL

K SILL ATTACHMENT AT CONCRETE

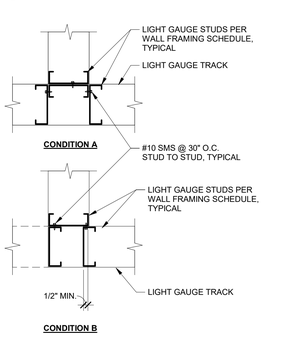

INTERSECTION WITH TRACKS AT THE SAME ELEVATION | INTERSECTION WITH TRACKS AT DIFFERENT ELEVATIONS

I TOP TRACK INTERSECTION

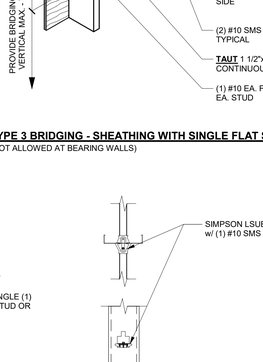

CONDITION A | CONDITION B

H CORNER FRAMING

TYPICAL METAL STUD WALL FRAMING

N.T.S. | 4

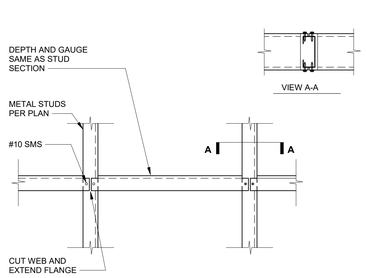

SOLID METAL BLOCKING

12" = 1'-0" | 29

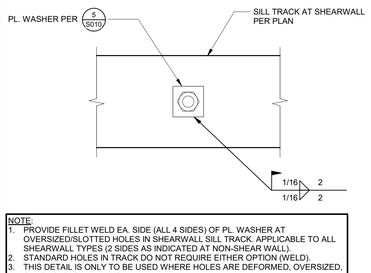

NOTE:
1. PROVIDE FILLET WELD EA. SIDE (ALL 4 SIDES) OF PL. WASHER AT OVERSIZED/SLOTTED HOLES IN SHEARWALL SILL TRACK. APPLICABLE TO ALL SHEARWALL TYPES (2 SIDES AS INDICATED AT NON-SHEAR WALL).
2. STANDARD HOLES IN TRACK DO NOT REQUIRE EITHER OPTION (WELD).
3. THIS DETAIL IS ONLY TO BE USED WHERE HOLES ARE DEFORMED, OVERSIZED, OBLONG, SLOTTED, ETC.
4. DETAIL IS APPLICABLE FOR ALL WALL TYPES.

OVER SIZED HOLE IN TRACK

3" = 1'-0" | 10

NOTE:
1. WHERE HOLES IN TRACK ARE OVER SIZED OR SLOTTED, SEE (10 / S010)
2. PROVIDE SEALER GASKET PER PROJECT MANUAL AT EXTERIOR WALLS. FOR SEALANTS/BARRIERS AT INTERIOR WALLS, SEE ARCH. DWGS. (i.e. ACOUSTIC, FIRE RATED WALLS, etc.)
3. AT CONTRACTOR'S OPTION, PROVIDE 5/8"Ø THREADED ROD EPOXY ANCHOR WITH 5" MINIMUM EMBEDMENT FROM FINISH FLOOR. EPOXY SHALL BE HILTI HIT-RE 500-V3 (ICC ESR-3814) (TEST 1,700#).
4. AT CORNERS, ANCHOR BOLTS SHALL BE 12" MAXIMUM FROM CORNERS.
5. AT TRACK ENDS THAT ARE BUTTED, ANCHOR BOLTS SHALL BE 3" MIN / 6" MAX FROM EACH END.

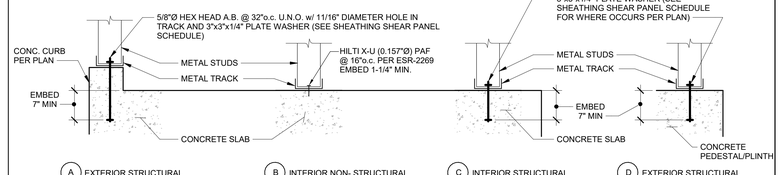

A EXTERIOR STRUCTURAL (BEARING/NON-BEARING AND/OR SHEAR)
B INTERIOR NON- STRUCTURAL (NON-BEARING AND/OR NON-SHEAR)
C INTERIOR STRUCTURAL (BEARING AND/OR SHEAR)
D EXTERIOR STRUCTURAL (BEARING/NON-BEARING AND/OR SHEAR)

METAL STUD AT SILL

12" = 1'-0" | 5

PLOT DATE: 10/31/2022 3:24:47 PM

\\tetr-file1\Users\luis.valtierra\Documents\12032-S-COS Tulare CTE_luis.valtierra.rvt

FOR BID ONLY

Teter, LLP expressly reserves its common law copyright and other property rights in these plans. This document, the ideas and designs incorporated herein, as an instrument of professional service, is not to be used in whole or in part, for any other project without prior written authorization.

MARK	DATE	DESCRIPTION
	11/1/22	DSA BACKCHECK

REGISTERED PROFESSIONAL ENGINEER LUIS S. BALTIERRA No. 55609 STRUCTURAL STATE OF CALIFORNIA

TETER, LLP
FRESNO HEADQUARTERS
VISALIA | BAKERSFIELD | MODESTO | SAN LUIS OBISPO
ARCHITECTS ENGINEERS CONSULTANTS

TETER

TULARE CAMPUS CTE
COLLEGE OF THE SEQUOIAS
4999 E. BARDSLEY AVE.
TULARE, CA

DRAWING TITLE
TYPICAL DETAILS - METAL STUD

PROJECT NO.
20-12032

DRAWING
S010

\\tet-file1\Users\luis.valtierra\Documents\12032-S-COS Tulare CTE_luis.valtierra.rvt
1/8" 1/4" 1/2" 1" 2" 3" 4"

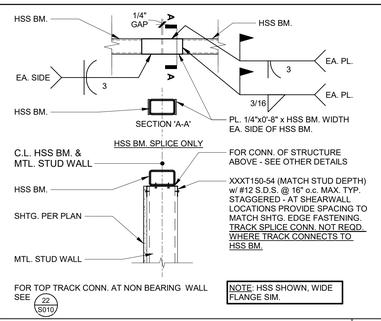

TYP. TOP TRACK TO HSS BEAM N.T.S. 21

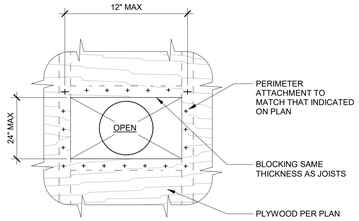

TYP. BLOCKING @ FLOOR OPENING N.T.S. 22

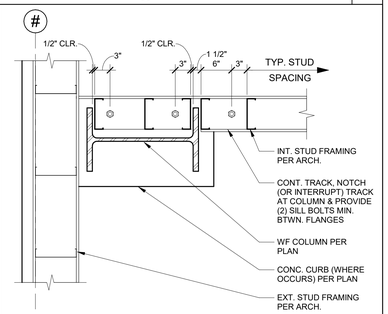

TYP. TRACK AT WF COLUMN N.T.S. 23

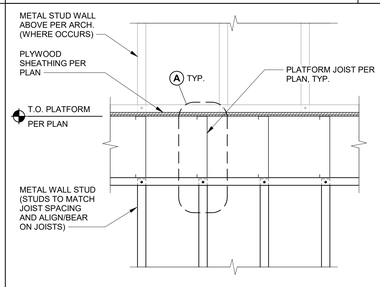

A TYPICAL PLATFORM WALL ELEVATION

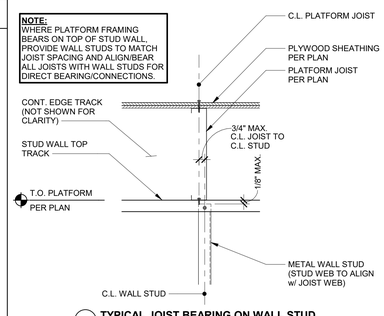

A TYPICAL JOIST BEARING ON WALL STUD

PLATFORM BEARING WALL N.T.S. 25

HOLDOWN & FOOTING SCHEDULE (1)						
MARK	HOLDOWN	ANCHOR ROD (5)	FRAMING FASTENERS	FRAMING MEMBERS	TENSION LOAD (4) ASD / LRFD	de
HD1	S/HDU4	5/8"Ø	(6) #14 (2)	(2) 43 MIL. MIN.	3,060# / 4,884#	8"
HD2	S/HDU6	5/8"Ø	(12) #14 (2)	(2) 43 MIL. MIN.	4,900# / 7,752#	8"
HD3	S/HDU9	7/8"Ø	(18) #14 (2)	(2) 43 MIL. MIN.	7,404# / 12,388#	10"
HD4	S/HD10S	7/8"Ø	(22) #14 (2)	(2) 43 MIL. MIN.	8,896# / 14,204#	12"
HD5	S/HD15S	1"Ø	(30) #14 (2)	(2) 54 MIL. MIN.	10,800# / 17,252#	12"

1. ALL HOLDOWNS IN THIS DETAIL ARE MANUFACTURED BY SIMPSON STRONGTIE. SEE PRODUCT CATALOG AND **IAPMO-ES REPORT NO. ER-124 (ISSUED: JUNE 2010, REVISED MAY 2021)** FOR ADDITIONAL INFORMATION.
2. 1/4" SELF-TAPPING SCREWS MAY BE SUBSTITUTED FOR #14 SELF-TAPPING SCREWS.
3. A ROUND STEEL STANDARD PLATE WASHER CONFORMING TO **ASME B18.22.1**, TYPE A, SHALL BE INSTALLED BETWEEN THE FRAMING MEMBER BOLT NUT AND THE FRAMING MEMBER.
4. LOAD DEMAND SHOWN IS FOR WORST CASE WIND AND SEISMIC LOADING, AND LIMITING LOAD BETWEEN HOLDOWN AND ANCHOR BOLT. 0.8 REDUCTION FACTOR APPLIED TO ALLOWABLE CAPACITY OF HOLDOWN.
5. ALL ANCHOR RODS SHALL BE **ASTM F1554** GRADE 36 (U.N.O.) CLASS 2A (ALTERNATIVELY, PROVIDE **ASTM A307** RODS. MAY BE FULLY THREADED OR SMOOTH WITH THREADED ENDS).
6. WHERE HSS COLUMN REPLACES HOLDOWN AND ANCHOR ROD (WHERE OCCURS PER PLAN), SEE DETAIL 10 S011

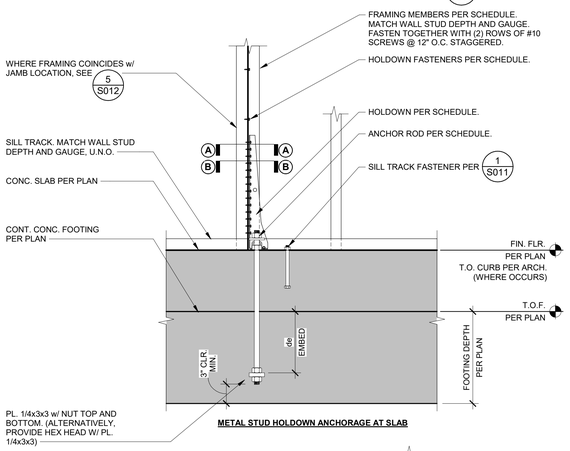

METAL STUD HOLDOWN ANCHORAGE AT SLAB

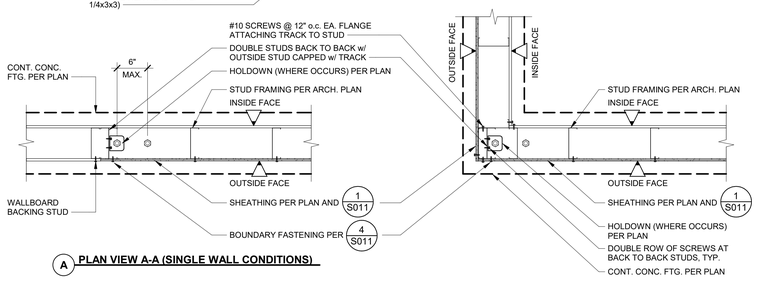

A PLAN VIEW A-A (SINGLE WALL CONDITIONS)

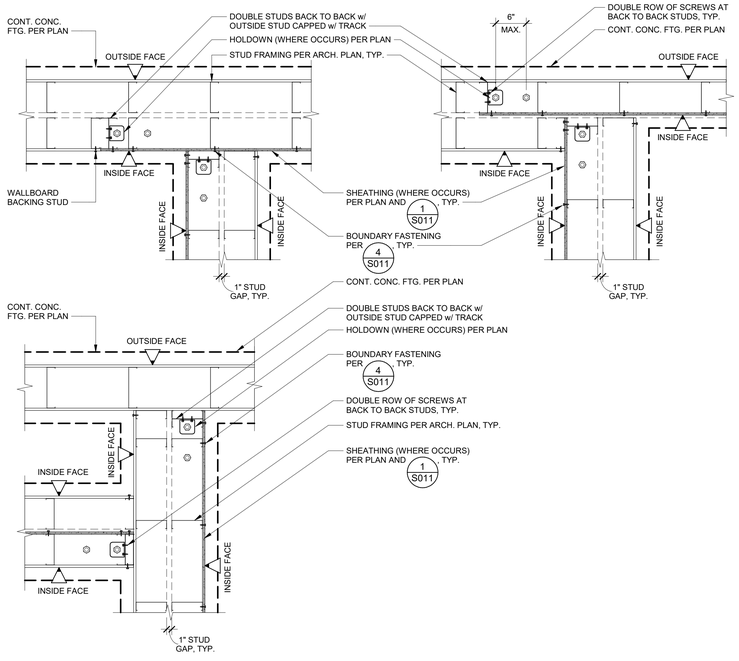

B PLAN VIEW A-A (DBL WALL CONDITIONS)

TYPICAL HOLDOWN SCHEDULE N.T.S. 15

TYPE	SURE-BOARD (IAPMO ES-0126)	MINIMUM STUD FRAMING		FASTENING			SILL ANCHOR BOLTS	REMARKS	ALLOWABLE LOAD (ASD)
		WIDTH	MIL.	SIZE	TYPE	SPACING			
1	SERIES 200	1 5/8"	33 MIL.	#8	#2 POINT SELF TAPPING/ SELF DRILLING SCREW	6:6:12	5/8"Ø @ 32" O.C.	BLOCK ALL PANEL EDGES	434 PLF

NOTES:
1. PROVIDE FRAMING MEMBERS AT MINIMUM WIDTH INDICATED WHERE FRAMING MEMBERS RECEIVE EDGE FASTENING (E.F.) FROM ABUTTING PANELS.
2. FOUNDATION SILL TRACK SHALL HAVE A MINIMUM FLANGE WIDTH OF 1 1/4" WITH MATCHING STUD DEPTH AND 54 MIL MIN.
3. FOR ADDITIONAL PANEL FASTENING INFORMATION, SEE 5 S012 & 9 S012
4. FOR TRACK HOLE SIZE AND PLATE WASHER AT ANCHOR BOLTS SEE 5 S010

SHEATHING SHEAR PANEL SCHEDULE N.T.S. 1

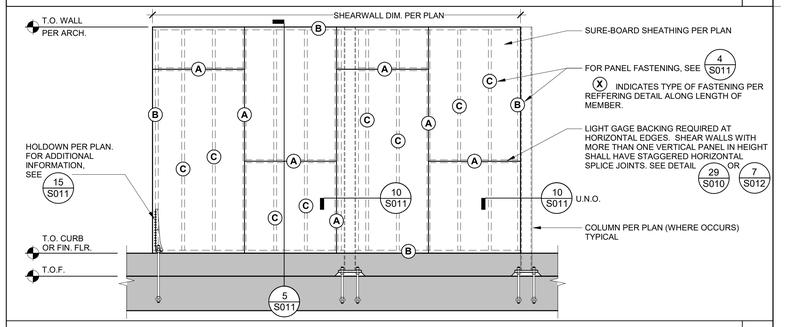

TYPICAL SHEAR WALL ELEVATION N.T.S. 2

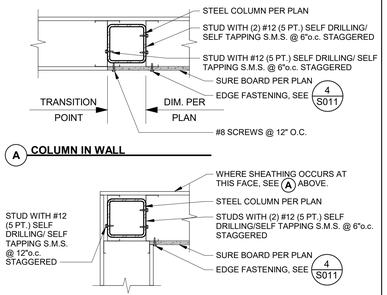

A COLUMN IN WALL

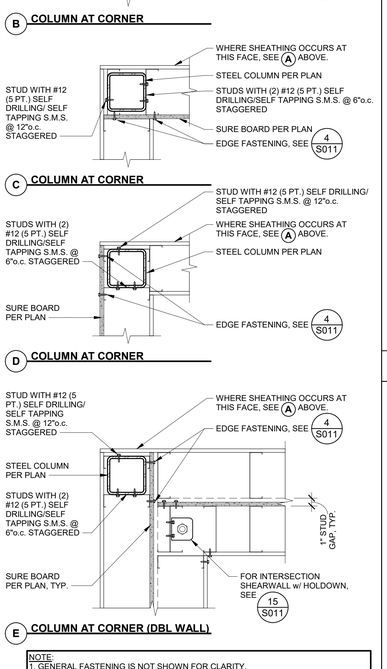

B COLUMN AT CORNER

C COLUMN AT CORNER

D COLUMN AT CORNER

E COLUMN AT CORNER (DBL WALL)

NOTE:
1. GENERAL FASTENING IS NOT SHOWN FOR CLARITY.
2. FOR NON-SHEAR WALL AND NON-LOAD BEARING WALLS, FASTENERS OF STUD TO HSS MAY BE (1) ROW #12 @ 12" o.c. STAGGERED

TYP. HSS/FASTENER CONN. N.T.S. 10

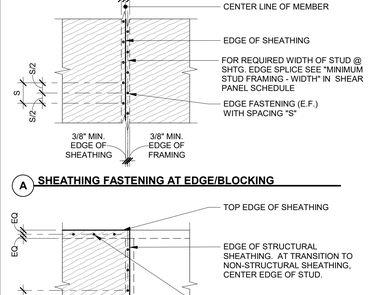

A SHEATHING FASTENING AT EDGE/BLOCKING

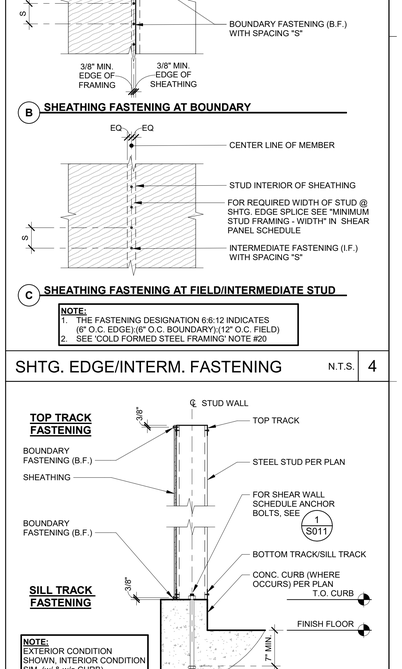

B SHEATHING FASTENING AT BOUNDARY

C SHEATHING FASTENING AT FIELD/INTERMEDIATE STUD

NOTE:
1. THE FASTENING DESIGNATION 6:6:12 INDICATES (6" O.C. EDGE);(6" O.C. BOUNDARY);(12" O.C. FIELD)
2. SEE 'COLD FORMED STEEL FRAMING' NOTE #20

SHTG. EDGE/INTERM. FASTENING N.T.S. 4

NOTE:
EXTERIOR CONDITION SHOWN, INTERIOR CONDITION SIM. (w/ & w/o CURB)

SHTG. BOUNDARY FASTENING N.T.S. 5

Teter, LLP expressly reserves its common law copyright and other property rights in these plans. This document, the ideas and designs incorporated herein, as an instrument of professional service, is not to be used in whole or in part, for any other project without prior written authorization.

FOR BID ONLY

MARK	DATE	DESCRIPTION
	11/1/22	DSA BACKCHECK

REGISTERED PROFESSIONAL ENGINEER LUIS S. BALTIERRA No. 55608 STRUCTURAL STATE OF CALIFORNIA

TETER, LLP
FRESNO HEADQUARTERS
VISALIA | BAKERSFIELD | MODESTO | SAN LUIS OBISPO
ARCHITECTS ENGINEERS CONNECTED

TULARE CAMPUS CTE
COLLEGE OF THE SEQUOIAS
4999 E. BARDSLEY AVE.
TULARE, CA

DRAWING TITLE
TYPICAL DETAILS - METAL STUD

PROJECT NO.
20-12032

DRAWING
S011

PLOT DATE: 10/31/2022 3:24:51 PM

\\tet-file1\Users\luis.valtierra\Documents\12032-S-COS Tulare CTE_luis.valtierra.rvt

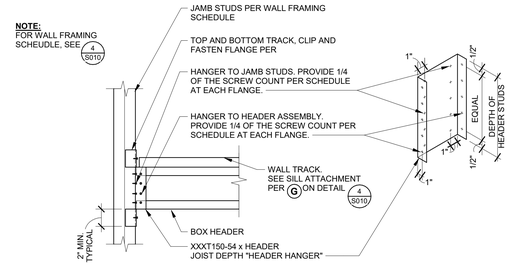

F **ALT. HEADER CONNECTION**

ALT. METAL STUD WALL HEADER CONNECTION N.T.S. 16

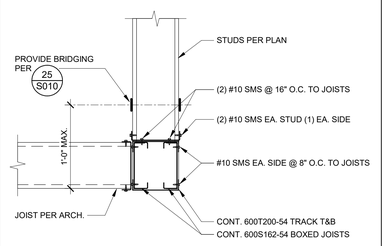

HEADER AT SOFFIT CORNER N.T.S. 11

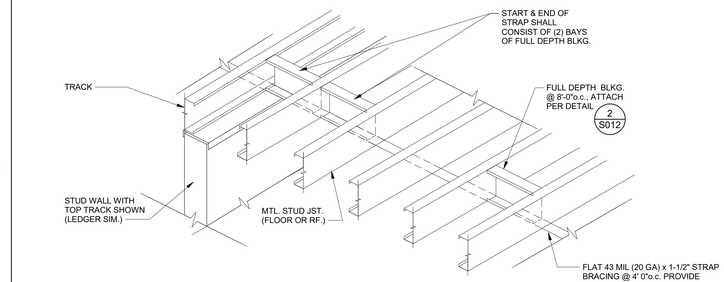

JOIST BLOCKING N.T.S. 1

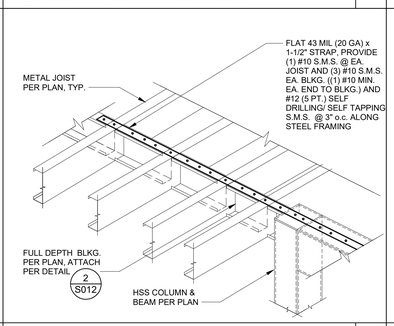

JOIST BLOCKING N.T.S. 12

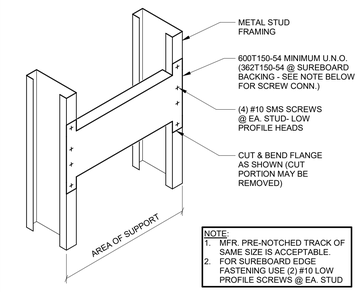

LIGHT GAUGE BACKING N.T.S. 7

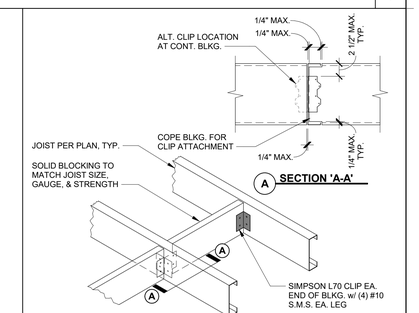

SOLID BLOCKING AT JOISTS N.T.S. 2

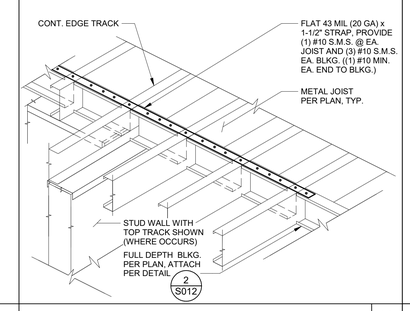

JOIST BLOCKING N.T.S. 13

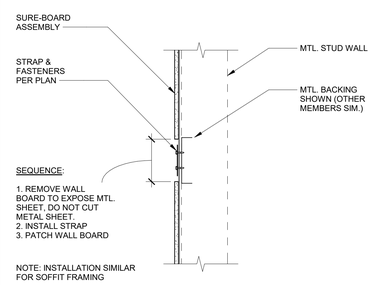

STRAP INST. AT SURE-BOARD N.T.S. 8

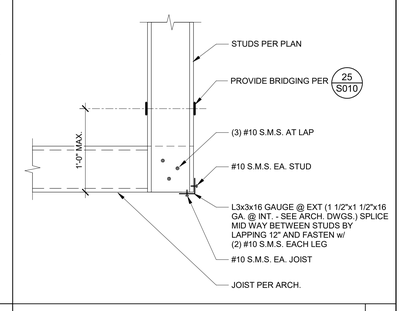

SOFFIT CORNER N.T.S. 3

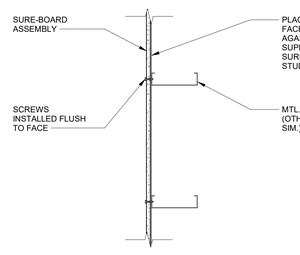

SURE-BOARD INSTALLATION N.T.S. 9

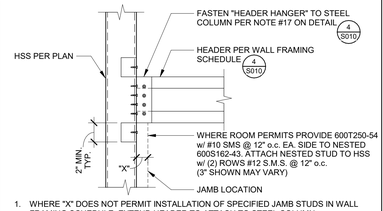

1. WHERE "X" DOES NOT PERMIT INSTALLATION OF SPECIFIED JAMB STUDS IN WALL FRAMING SCHEDULE, EXTEND HEADER TO ATTACH TO STEEL COLUMN.
2. WHEN HEADER IS EXTENDED, INCREASE THE OPENING WIDTH DETERMINATION TO F.O. COLUMN AND USE THIS DIMENSION IN DETERMINING THE FRAMING FROM THE WALL FRAMING SCHEDULE (WHERE THE WIDTH INCREASE IS 2" OR LESS, NO INCREASE IN FRAMING IS REQUIRED).
3. WHERE THE HEADER HANGER CONNECTS TO AN HSS4X4, THE 1" EDGE DISTANCE ON THE WEB SHOULD BE INCREASED TO 1-1/2" (SEE F ON 4 S010)
4. WHERE POSSIBLE, JAMB FRAMING PER THE WALL FRAMING SCHEDULE SHOULD BE USED WIHTOUT EXTENDING THE HEADER.

HEADER TO STL. COL. N.T.S. 10

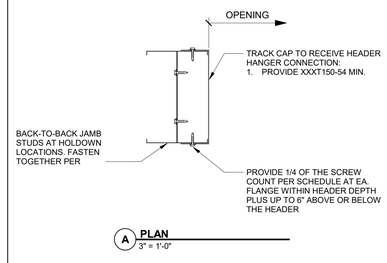

A **PLAN**
3" = 1'-0"

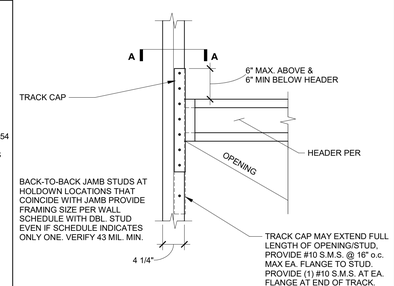

HOLDOWN @ JAMB N.T.S. 5

PLOT DATE: 10/31/2022 3:24:54 PM

Teter, LLP expressly reserves its common law copyright and other property rights in these plans. This document, the ideas and designs incorporated herein, as an instrument of professional service, is not to be used in whole or in part, for any other project without prior written authorization.

FOR BID ONLY

MARK	DATE	DESCRIPTION
	11/1/22	DSA BACKCHECK

REGISTERED PROFESSIONAL ENGINEER E. S. BALTA No. 55609 STRUCTURAL STATE OF CALIFORNIA

TETER, LLP
FRESNO HEADQUARTERS
VISALIA | BAKERSFIELD | MODESTO | SAN LUIS OBISPO
ARCHITECTS ENGINEERS CONNECTED

TETER

TULARE CAMPUS CTE
COLLEGE OF THE SEQUOIAS
4999 E. BARDSLEY AVE.
TULARE, CA

PROJECT NO.
20-12032

DRAWING TITLE
TYPICAL DETAILS - METAL STUD

DRAWING
S012

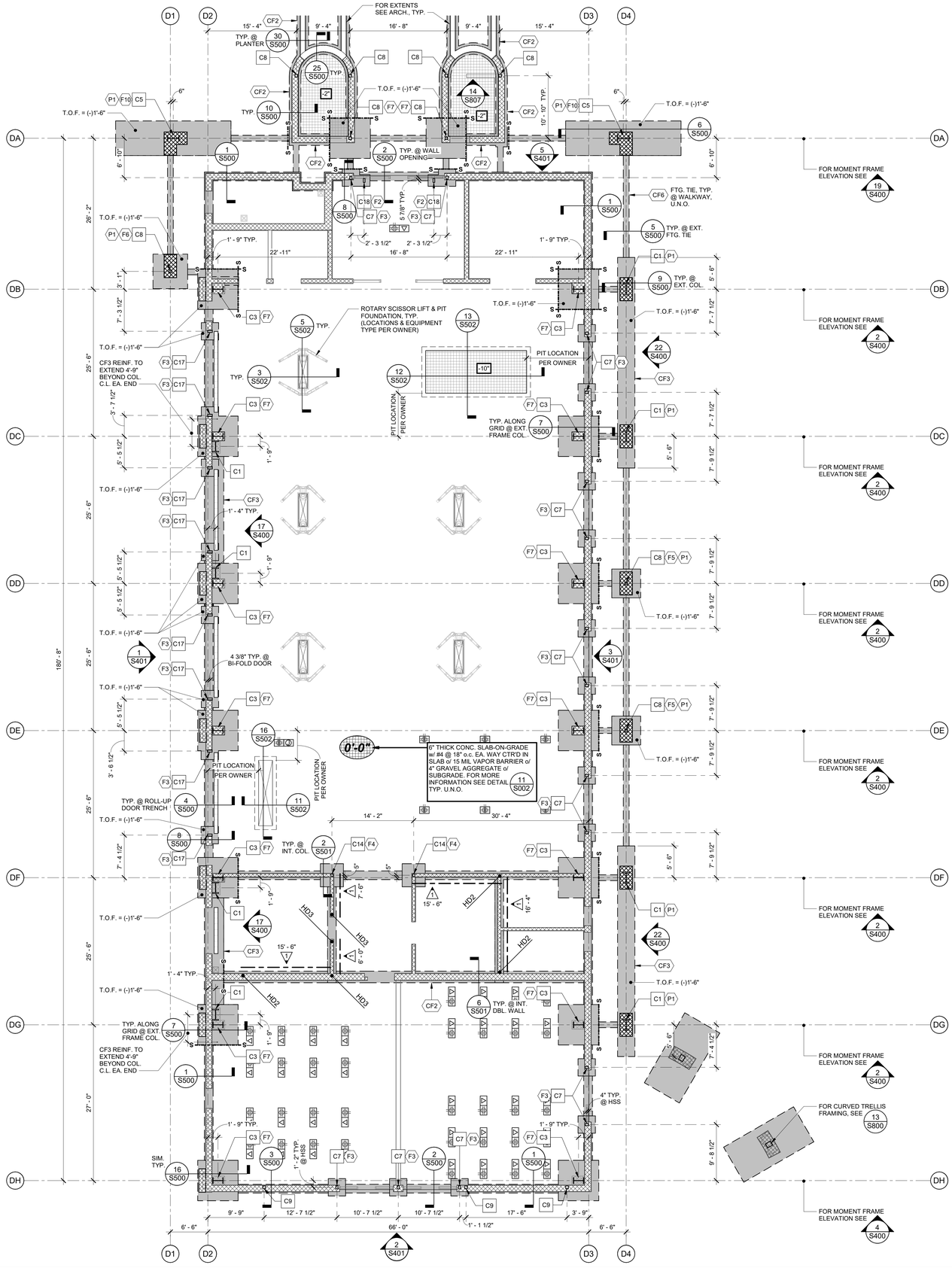

COLUMN SCHEDULE		
TYPE	**DESCRIPTION**	**COMMENTS**
C1	W21X223	TYPE 3 BASE PLATE - SEE DETAIL **20 / S007**.
C2	W21X122	TYPE 2 BASE PLATE - SEE DETAIL **20 / S007**.
C3	W21X132	TYPE 2 BASE PLATE - SEE DETAIL **20 / S007**.
C4	W24X131	TYPE 1 BASE PLATE - SEE DETAIL **20 / S007**.
C5	W24X146	TYPE 1 BASE PLATE - SEE DETAIL **20 / S007**.
C6	HSS5X5X3/16	FOR BASE CONN. - SEE DETAIL **2 / S804**.
C7	HSS7X5X3/8	
C8	HSS6X6X3/8	
C9	HSS6X6X1/4	
C10	HSS12X10X1/2	
C11	HSS3X3X3/16	
C12	HSS4X4X3/16	
C13	HSS4X4X1/4	
C14	HSS5X5X1/4	
C16	HSS6X6X1/2	
C17	HSS10X5X3/8	
C18	HSS8X4X3/16	
C19	HSS6X4X3/16	

FOUNDATION SCHEDULE		
TYPE	**SIZE**	**REINFORCEMENT**
CONTINUOUS FOOTING		
CF1	1'-6" WIDE x 1'-6" THICK CONT.	(2) #5 LONG T&B w/ #3 TIES @ 12" o.c.
CF2	2'-0" WIDE x 1'-6" THICK CONT.	(3) #5 LONG T&B w/ #3 TIES @ 12" o.c.
CF3	3'-0" WIDE x 2'-0" THICK CONT.	(6) #5 LONG T&B w/ #3 TIES @ 12" o.c.
CF4	4'-0" WIDE x 1'-6" THICK CONT.	SEE DETAIL 15/S500
CF4.5	4'-6" WIDE x 1'-6" THICK CONT.	SEE DETAIL 15/S500
CF5	5'-0" WIDE x 1'-6" THICK CONT.	SEE DETAIL 15/S500
CF6	1'-0" WIDE x 0'-6" THICK CONT.	(2) #5 CTRD. LONG
CF7	5'-0" WIDE x 1'-6" THICK CONT.	(6) #5 LONG. T&B & (12) #5 TRANS. T&B
PAD FOOTING		
F2	2'-0" SQ. x 1'-6" DP.	(2) #5 T&B EA. WAY
F3	3'-0" SQ. x 1'-6" DP.	(3) #5 T&B EA. WAY
F4	4'-0" SQ. x 1'-6" DP.	(4) #5 T&B EA. WAY
F5	5'-0" SQ. x 1'-6" DP.	(5) #5 T&B EA. WAY
F6	6'-0" SQ. x 2'-0" DP.	(7) #6 T&B EA. WAY
F7	7'-0" SQ. x 2'-0" DP.	(7) #7 T&B EA. WAY
F8	14-0" x 7'-0" x 2'-0" DP.	#6 T&B EA. WAY @ 12" o.c.
F10	20'-0" x 6'-0" x 4'-0" DP.	(11) #8 T&B w/ #3 TIES @ 12" o.c.
PEDESTAL		
P1	2'-2" x 4'-0" x (T.O.F. UPTO 4'-0" A.F.F.)	

FOUNDATION NOTES

1. THE TYPICAL DETAILS SHOWN ON THE S0XX SHEETS SHALL APPLY IN ALL CASES, UNLESS SPECIFICALLY SHOWN OTHERWISE. WHERE NO DETAIL IS SHOWN, CONSTRUCTION SHALL BE AS SHOWN FOR SIMILAR WORK. SEE GENERAL NOTES AND TYPICAL DETAILS FOR ADDITIONAL INFORMATION.
2. UNCLEAR, CONFLICTING AND/OR MISSING INFORMATION SHALL BE BROUGHT TO THE ENGINEER'S ATTENTION PRIOR TO CONSTRUCTION.
3. ALL DIMENSIONS ARE TO FACE OF WALL STUD OR CENTER OF COLUMN, U.N.O. COORDINATE ALL DIMENSIONS WITH ARCHITECTURAL DRAWINGS.
4. ALL COLUMNS ARE TO BE CENTERED IN STUD WALLS AND ON PAD FOOTINGS, U.N.O.
5. SEE CIVIL PLANS AND OR SITE PLAN FOR LOCATION AND DIMENSIONS OF SIDEWALKS, RAMPS, EXTERIOR SLABS, MOW STRIPS AND PLANTERS.
6. FOR FLOOR DRAIN, DATA AND FLOOR BOX LOCATIONS REFER TO PLUMBING, MECHANICAL, ARCHITECTURAL, ELECTRICAL AND TECHNOLOGY PLANS.
7. ALL EXTERIOR CONCRETE SLABS ARE TO BE POURED SEPERATE.
8. FOR SLAB ON GRADE JOINT DETAILNG, SEE 1/S003 & 2/S003
9. ALL EMBEDDED ITEMS SHALL BE IN PLACE AND SECURE PRIOR TO POURING OF CONCRETE.
10. ALL CONTINUOUS FOOTINGS TO BE TYPE CF1 U.N.O.
11. TOP OF FOOTING (T.O.F.) ELEVATIONS SHALL BE (-) 1'-0", U.N.O.
12. ALL ELEVATIONS ARE ESTABLISHED FROM AND RELATIVE TO FIRST FLOOR FINISHED SLAB (0'-0" DATUM), U.N.O. FOR ACTUAL ELEVATIONS, SEE CIVIL DRAWINGS.
13. FOR PIPES/CONDUITS NEAR TO OR INTERSECTING FOUNDATIONS, SEE 15/S002
14. FOR INTERIOR NON-BEARING WALLS, SEE 3/S003
15. SEE ARCHITECTURAL DRAWINGS FOR WALL STUD SIZES AND SPACING, U.N.O.
16. FOR TYPICAL INTERIOR HSS COLUMN FOOTING DETAILS, SEE 2/S501
17. FOR TYPICAL EXTERIOR HSS COLUMN FOOTING DETAILS, SEE 3/S500 & 8/S505
18. FOR MOMENT AND PORTAL FRAME COLUMN FOOTING DETAILS, SEE ELEVATIONS.
19. CONCRETE SLABS ARE FINISH SURFACES AS INDICATED ON ARCHITECTURAL FINISH FLOOR PLANS. NO TEMPORARY FASTENING, HOLES OR DEFORMATIONS ARE ALLOWED.

LEGEND

- GRID BUBBLE AND NUMBER. SEE ARCHITECTURAL DRAWING PACKAGE FOR DETAILED DIMENSIONS OF ALL GRIDS SHOWN.
- 1/S400 — SECTION/ ELEVATION MARK. SEE REFERENCING DETAIL NUMBER AND SHEET NUMBER FOR ADDITIONAL INFORMATION.
- 1/S700 — DETAIL MARK. SEE REFERENCING DETAIL NUMBER AND SHEET NUMBER FOR ADDITIONAL INFORMATION.
- T.O.W. = 0'-0" — ELEVATION MARK
  - T.O.W. = TOP OF WALL
  - T.O.F. = TOP OF FOOTING
  - T.O.S. = TOP OF STEEL
- FX — FOOTING TAG. SEE FOUNDATION SCHEDULE FOR ADDITIONAL INFORMATION.
- PX — PEDESTAL TAG. SEE FOUNDATION SCHEDULE FOR ADDITIONAL INFORMATION.
- CFX — CONTINUOUS FOOTING TAG. SEE FOUNDATION SCHEDULE FOR ADDITIONAL INFORMATION.
- CX — COLUMN TAG. SEE COLUMN SCHEDULE FOR ADDITIONAL INFORMATION.
- CONCRETE FOOTING.
- 2'-0" — INDICATES AREA AND DEPTH OF SLAB DEPRESSION. SEE ARCHITECTURAL DRAWINGS AND DETAIL 4/S003
- INDICATES METAL STUD WALLS. FOR STUD SIZES, SPACING AND ARCHITECTURAL WALL TYPES, SEE ARCHITECTURAL DRAWINGS. FOR TYPICAL WALL FRAMING SEE DETAIL 4/S010
- INDICATES 8" HIGH CONCRETE CURB. SEE ARCH. FOR CURB WIDTH
- INDICATES FLOOR BOX. SEE ELECTRICAL DRAWINGS.
- HD1 — INDICATES HOLDOWN PER 15/S011
- INDICATES METAL STUD WALL PER ARCH.
- S — 4'-0" — INDICATES SHEAR WALL - FOR SHEATHING SEE S011; INDICATES REQUIRED SHEAR WALL LENGTH. OVERALL WALL LENGTH SHALL BE CONTROLLED BY ARCH. DIMS.
- S-·-·-S — INDICATES STEPPED FOOTING PER DETAIL 18/S002. STEP OCCURING AT TIE FOOTING MAY SLOPE FOR ELEVATION CHANGE.
- INDICATES FLOOR DRAIN. SEE PLUMBING FOR ADDITIONAL INFORMATION.

NOTES, SCHEDULE & LEGEND | 4

KEYPLAN

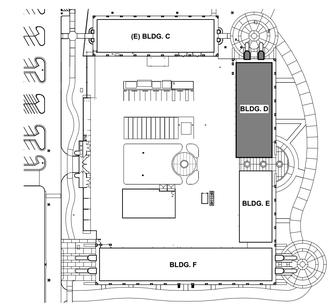

FOUNDATION PLAN - BUILDING D | 1/8" = 1'-0" | 10

Teter, LLP expressly reserves its common law copyright and other property rights in these plans. This document, the ideas and designs incorporated herein, as an instrument of professional service, is not to be used in whole or part, for any other project without prior written authorization.

MARK	DATE	DESCRIPTION
	11/1/22	DSA BACKCHECK

FOR BID ONLY

REGISTERED PROFESSIONAL ENGINEER — STEVEN S. BAILEY — No. 55609 — STRUCTURAL — STATE OF CALIFORNIA

TETER, LLP
ARCHITECTS ENGINEERS CONNECTED
FRESNO HEADQUARTERS
VISALIA | BAKERSFIELD | MODESTO | SAN LUIS OBISPO

TETER

TULARE CAMPUS CTE
COLLEGE OF THE SEQUOIAS
4999 E. BARDSLEY AVE.
TULARE, CA

DRAWING TITLE: FOUNDATION PLAN - BUILDING D

PROJECT NO. 20-12032

DRAWING S100

\\tet-file1\Users\luis.valtierra\Documents\12032-S-COS Tulare CTE_luis.valtierra.rvt
PLOT DATE: 10/31/2022 3:25:11 PM

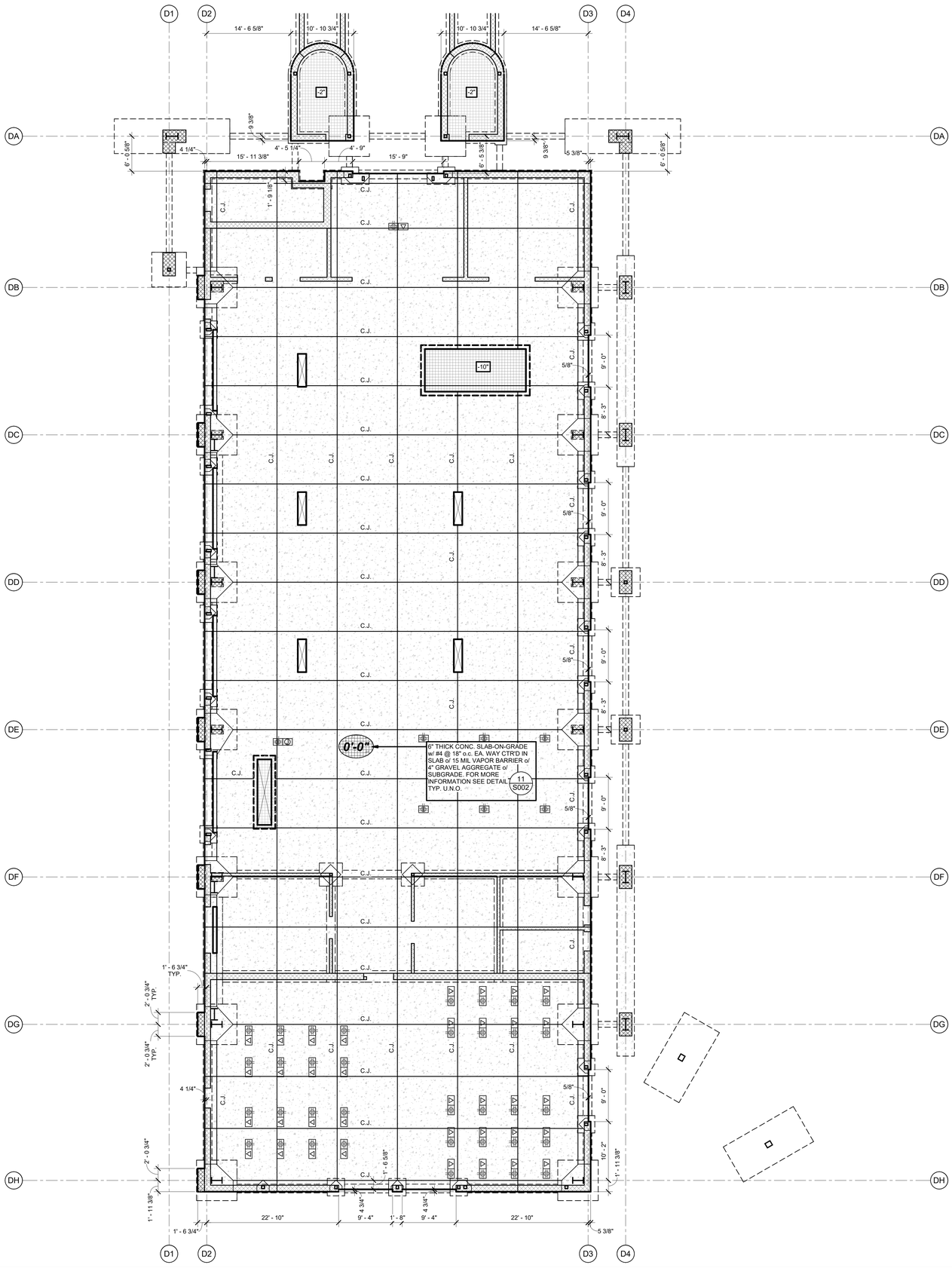

SLAB EDGE PLAN NOTES

1. THE TYPICAL DETAILS SHOWN ON THE S0XX SERIES SHEETS SHALL APPLY IN ALL CASES UNLESS SPECIFICALLY SHOWN OTHERWISE. WHERE NO DETAIL IS SHOWN, CONSTRUCTION SHALL BE AS SHOWN FOR SIMILAR WORK. SEE SHEET SPECIFICATIONS AND TYPICAL DETAILS FOR ADDITIONAL INFORMATION.
2. UNCLEAR, CONFLICTING, AND/OR MISSING INFORMATION SHALL BE BROUGHT TO THE ENGINEERS ATTENTION PRIOR TO CONSTRUCTION.
3. ALL DIMENSIONS ARE TO EDGE OF SLAB OR CENTER OF SLAB JOINT, U.N.O. COORDINATE ALL DIMENSIONS WITH ARCHITECTURAL DRAWINGS.
4. ALL COLUMNS ARE TO BE CENTERED ON GRIDS, PAD FOOTINGS, AND IN STUD WALLS, UNLESS NOTED OTHERWISE.
5. SEE CIVIL PLANS AND OR SITE PLAN FOR LOCATION AND DIMENSIONS OF SIDEWALKS, RAMPS, EXTERIOR SLABS, MOW STRIPS, AND PLANTERS.
6. FOR FLOOR DRAIN, DATA, AND FLOOR BOX LOCATIONS REFER TO ARCHITECTURAL, MECHANICAL, PLUMBING, ELECTRICAL AND TECHNOLOGY PLANS.
7. ALL EXTERIOR CONCRETE SLABS ARE TO BE POURED SEPARATE.
8. SLAB THICKNESS TO BE CONSTANT WHERE SLABS SLOPE TO DRAIN.
9. FOR SLABS ON GRADE JOINT DETAILING, SEE DETAILS 1/S003 & 3/S002
10. ALL EMBEDDED ITEMS SHALL BE IN PLACE AND SECURE PRIOR TO POURING OF CONCRETE.
11. ALL ELEVATIONS ARE ESTABLISHED FROM AND RELATIVE TO FIRST FLOOR FINISHED SLAB (0'-0" DATUM), U.N.O. FOR ACTUAL ELEVATIONS, SEE CIVIL DRAWINGS.
12. CONCRETE SLABS ARE FINISH SURFACES AS INDICATED ON ARCHITECTURAL FINISH FLOOR PLANS. NO TEMPORARY FASTENING, HOLES, OR DEFORMATIONS ARE ALLOWED.
13. PROVIDE REENETRANT CORNER REINFORCING AT ALL PITS AND TRENCHES PER DETAIL 10/S003

LEGEND

- # — GRID BUBBLE AND NUMBER. SEE ARCHITECTURAL DRAWING PACKAGE FOR DETAILED DIMENSIONS OF ALL GRIDS SHOWN.
- 1/S400 — SECTION/ ELEVATION MARK. SEE REFERENCING DETAIL NUMBER AND SHEET NUMBER FOR ADDITIONAL INFORMATION.
- 1/S500 — DETAIL MARK. SEE REFERENCING DETAIL NUMBER AND SHEET NUMBER FOR ADDITIONAL INFORMATION.
- CONCRETE FOOTING.
- -2" — INDICATES AREA AND DEPTH OF SLAB DEPRESSION FROM FINISHED FLOOR. SEE ARCHITECTURAL DRAWINGS AND DETAIL 4/S003
- C.J. — INDICATES CONTROL JOINTS. LAYOUT SHOWN IS PRELIMINARY. FINAL LAYOUT TO BE DETERMINED BY G.C. VERIFY SPACING PER CONCRETE MIX, PLACEMENT, AND FINSIH SHEET SPECIFICATION. SEE DETAIL 2/S003
- H — INDICATES A COLUMN BLOCKOUT, SEE DETAIL 9/S003
- INDICATES FLOOR BOX. SEE ELECTRICAL DRAWINGS.
- INDICATES 8" HIGH CONCRETE CURB. SEE ARCH. FOR CURB WIDTH

NORTH

NOTES & LEGEND | 4

KEYPLAN

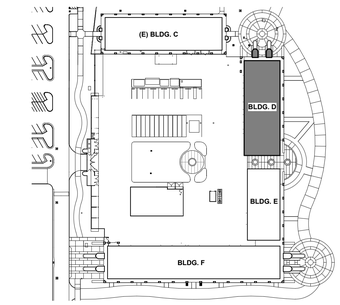

SLAB EDGE PLAN - BUILDING D | 1/8" = 1'-0" | 10

FOR BID ONLY

Teter, LLP expressly reserves its common law copyright and other property rights in these plans. This document, the ideas and designs incorporated herein, as an instrument of professional service, is not to be used in whole or part, for any other project without prior written authorization.

MARK	DATE	DESCRIPTION
	11/1/22	DSA BACKCHECK

REGISTERED PROFESSIONAL ENGINEER S. BAILEY No. 55659 STRUCTURAL STATE OF CALIFORNIA

TETER, LLP
FRESNO HEADQUARTERS
VISALIA | BAKERSFIELD | MODESTO | SAN LUIS OBISPO
ARCHITECTS ENGINEERS CONNECTED

TETER

TULARE CAMPUS CTE
COLLEGE OF THE SEQUOIAS
4999 E. BARDSLEY AVE.
TULARE, CA

DRAWING TITLE
SLAB EDGE PLAN - BUILDING D

PROJECT NO.
20-12032

DRAWING
S101

PLOT DATE: 10/31/2022 3:25:15 PM

\\tet-file1\Users\luis.valtierra\Documents\12032-S-COS Tulare CTE_luis.valtierra.rvt

\\tet-file1\Users\luis.valtierra\Documents\12032-S-COS Tulare CTE_luis.valtierra.rvt

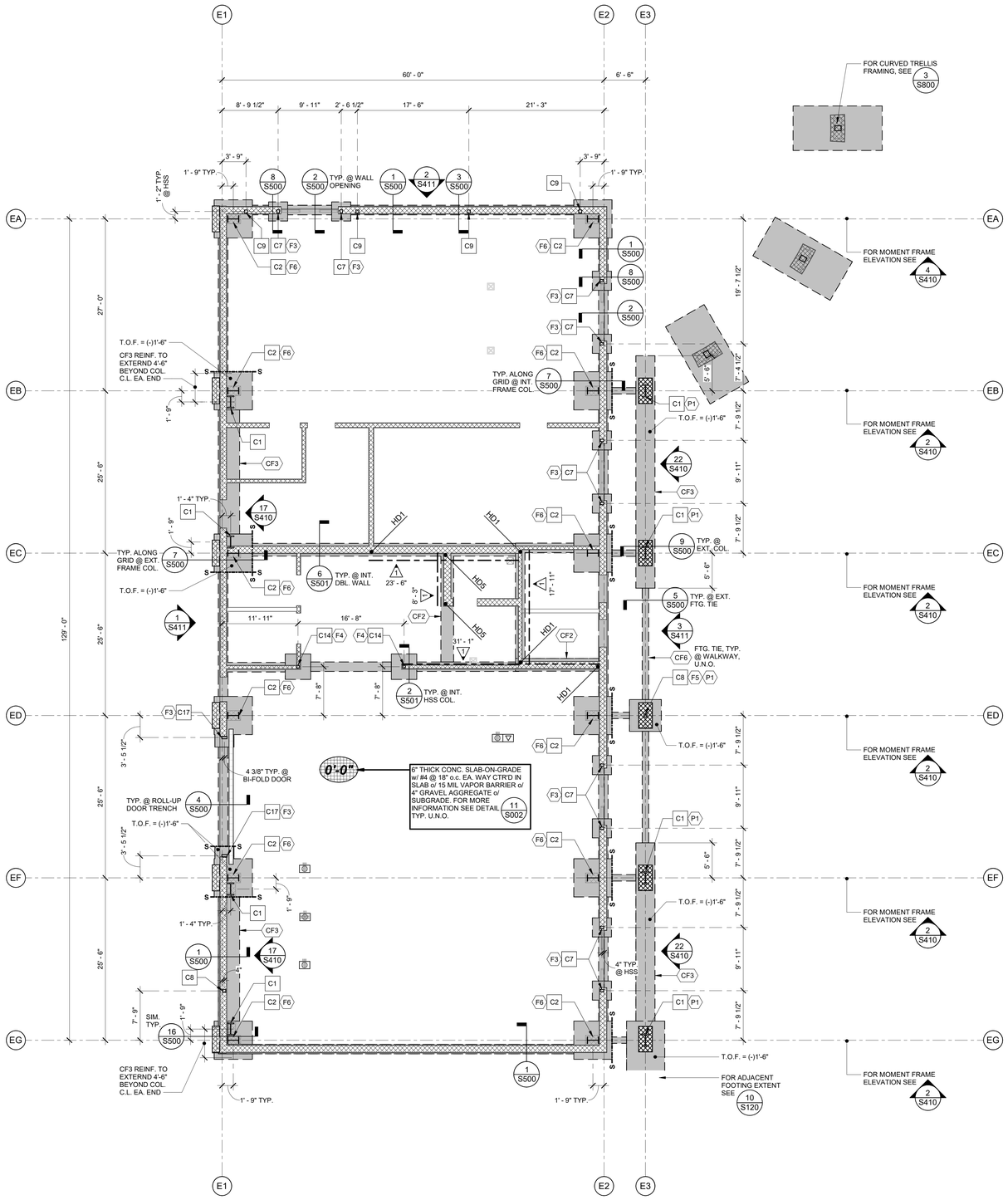

FOUNDATION NOTES

1. THE TYPICAL DETAILS SHOWN ON THE S0XX SHEETS SHALL APPLY IN ALL CASES, UNLESS SPECIFICALLY SHOWN OTHERWISE. WHERE NO DETAIL IS SHOWN, CONSTRUCTION SHALL BE AS SHOWN FOR SIMILAR WORK. SEE GENERAL NOTES AND TYPICAL DETAILS FOR ADDITIONAL INFORMATION.
2. UNCLEAR, CONFLICTING AND/OR MISSING INFORMATION SHALL BE BROUGHT TO THE ENGINEER'S ATTENTION PRIOR TO CONSTRUCTION.
3. ALL DIMENSIONS ARE TO FACE OF WALL STUD OR CENTER OF COLUMN, U.N.O. COORDINATE ALL DIMENSIONS WITH ARCHITECTURAL DRAWINGS.
4. ALL COLUMNS ARE TO BE CENTERED IN STUD WALLS AND ON PAD FOOTINGS, U.N.O.
5. SEE CIVIL PLANS AND OR SITE PLAN FOR LOCATION AND DIMENSIONS OF SIDEWALKS, RAMPS, EXTERIOR SLABS, MOW STRIPS AND PLANTERS.
6. FOR FLOOR DRAIN, DATA AND FLOOR BOX LOCATIONS REFER TO PLUMBING, MECHANICAL, ARCHITECTURAL, ELECTRICAL AND TECHNOLOGY PLANS.
7. ALL EXTERIOR CONCRETE SLABS ARE TO BE POURED SEPERATE.
8. FOR SLAB ON GRADE JOINT DETAILNG, SEE (1/S003) & (2/S003).
9. ALL EMBEDDED ITEMS SHALL BE IN PLACE AND SECURE PRIOR TO POURING OF CONCRETE.
10. ALL CONTINUOUS FOOTINGS TO BE TYPE (CF1) U.N.O.
11. TOP OF FOOTING (T.O.F.) ELEVATIONS SHALL BE (-) 1'-0", U.N.O.
12. ALL ELEVATIONS ARE ESTABLISHED FROM AND RELATIVE TO FIRST FLOOR FINISHED SLAB (0'-0" DATUM), U.N.O. FOR ACTUAL ELEVATIONS, SEE CIVIL DRAWINGS.
13. FOR PIPES/CONDUITS NEAR TO OR INTERSECTING FOUNDATIONS, SEE (15/S002)
14. FOR INTERIOR NON-BEARING WALLS, SEE (3/S003)
15. SEE ARCHITECTURAL DRAWINGS FOR WALL STUD SIZES AND SPACING, U.N.O.
16. FOR TYPICAL INTERIOR HSS COLUMN FOOTING DETAILS, SEE (2/S501)
17. FOR TYPICAL EXTERIOR HSS COLUMN FOOTING DETAILS, SEE (3/S500) & (8/S500).
18. FOR MOMENT AND PORTAL FRAME COLUMN FOOTING DETAILS, SEE ELEVATIONS.
19. CONCRETE SLABS ARE FINISH SURFACES AS INDICATED ON ARCHITECTURAL FINISH FLOOR PLANS. NO TEMPORARY FASTENING, HOLES OR DEFORMATIONS ARE ALLOWED.

SCHEUDLE

1. FOR FOUNDATION SCHEDULE, SEE SHEET S100.
2. FOR COLUMN SCHEDULE, SEE SHEET S100.

LEGEND

- (#) GRID BUBBLE AND NUMBER. SEE ARCHITECTURAL DRAWING PACKAGE FOR DETAILED DIMENSIONS OF ALL GRIDS SHOWN.
- (1/S400) SECTION/ ELEVATION MARK. SEE REFERENCING DETAIL NUMBER AND SHEET NUMBER FOR ADDITIONAL INFORMATION.
- (1/S700) DETAIL MARK. SEE REFERENCING DETAIL NUMBER AND SHEET NUMBER FOR ADDITIONAL INFORMATION.
- T.O.W. = 0'-0" ELEVATION MARK. T.O.W. = TOP OF WALL; T.O.F. = TOP OF FOOTING; T.O.S. = TOP OF STEEL
- (FX) FOOTING TAG. SEE FOUNDATION SCHEDULE FOR ADDITIONAL INFORMATION.
- (PX) PEDESTAL TAG. SEE FOUNDATION SCHEDULE FOR ADDITIONAL INFORMATION.
- (CFX) CONTINUOUS FOOTING TAG. SEE FOUNDATION SCHEDULE FOR ADDITIONAL INFORMATION.
- (CX) COLUMN TAG. SEE COLUMN SCHEDULE FOR ADDITIONAL INFORMATION.
- CONCRETE FOOTING.
- -2" INDICATES AREA AND DEPTH OF SLAB DEPRESSION. SEE ARCHITECTURAL DRAWINGS AND DETAIL (4/S003)
- INDICATES METAL STUD WALLS. FOR STUD SIZES, SPACING AND ARCHITECTURAL WALL TYPES, SEE ARCHITECTURAL DRAWINGS. FOR TYPICAL WALL FRAMING SEE DETAIL (4/S010)
- INDICATES 8" HIGH CONCRETE CURB. SEE ARCH. FOR CURB WIDTH
- INDICATES FLOOR BOX. SEE ELECTRICAL DRAWINGS.
- HD1 INDICATES HOLDOWN PER (15/S011)
- INDICATES METAL STUD WALL PER ARCH.
- A INDICATES SHEAR WALL - FOR SHEATHING SEE (1/S011)
- 4' - 0" INDICATES REQUIRED SHEAR WALL LENGTH. OVERALL WALL LENGTH SHALL BE CONTROLLED BY ARCH. DIMS.
- S-S INDICATES STEPPED FOOTING PER DETAIL (18/S002). STEP OCCURING AT TIE FOOTING MAY SLOPE FOR ELEVATION CHANGE.
- INDICATES FLOOR DRAIN. SEE PLUMBING FOR ADDITIONAL INFORMATION.

NOTES, SCHEDULE & LEGEND | 4

KEYPLAN

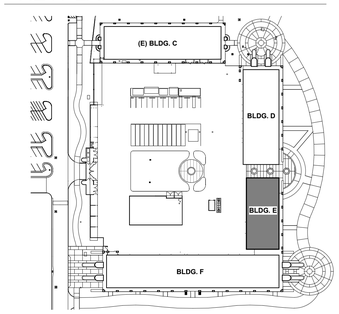

NORTH

FOUNDATION PLAN - BUILDING E | 1/8" = 1'-0" | 10

FOR BID ONLY

Teter, LLP expressly reserves its common law copyright and other property rights in these plans. This document, the ideas and designs incorporated herein, as an instrument of professional service, is not to be used in whole or part, for any other project without prior written authorization.

MARK	DATE	DESCRIPTION
	11/1/22	DSA BACKCHECK

REGISTERED PROFESSIONAL ENGINEER LUIS S. BALTIERRA No. 55609 STRUCTURAL STATE OF CALIFORNIA

TETER, LLP
ARCHITECTS ENGINEERS CONSULTANTS
FRESNO HEADQUARTERS
VISALIA | BAKERSFIELD | MODESTO | SAN LUIS OBISPO

TULARE CAMPUS CTE
COLLEGE OF THE SEQUOIAS
4999 E. BARDSLEY AVE.
TULARE, CA

DRAWING TITLE
FOUNDATION PLAN - BUILDING E

PROJECT NO.
20-12032

DRAWING
S110

PLOT DATE: 10/31/2022 3:25:19 PM

\\teter-file1\Users\luis.valtierra\Documents\12032-S-COS Tulare CTE_luis.valtierra.rvt

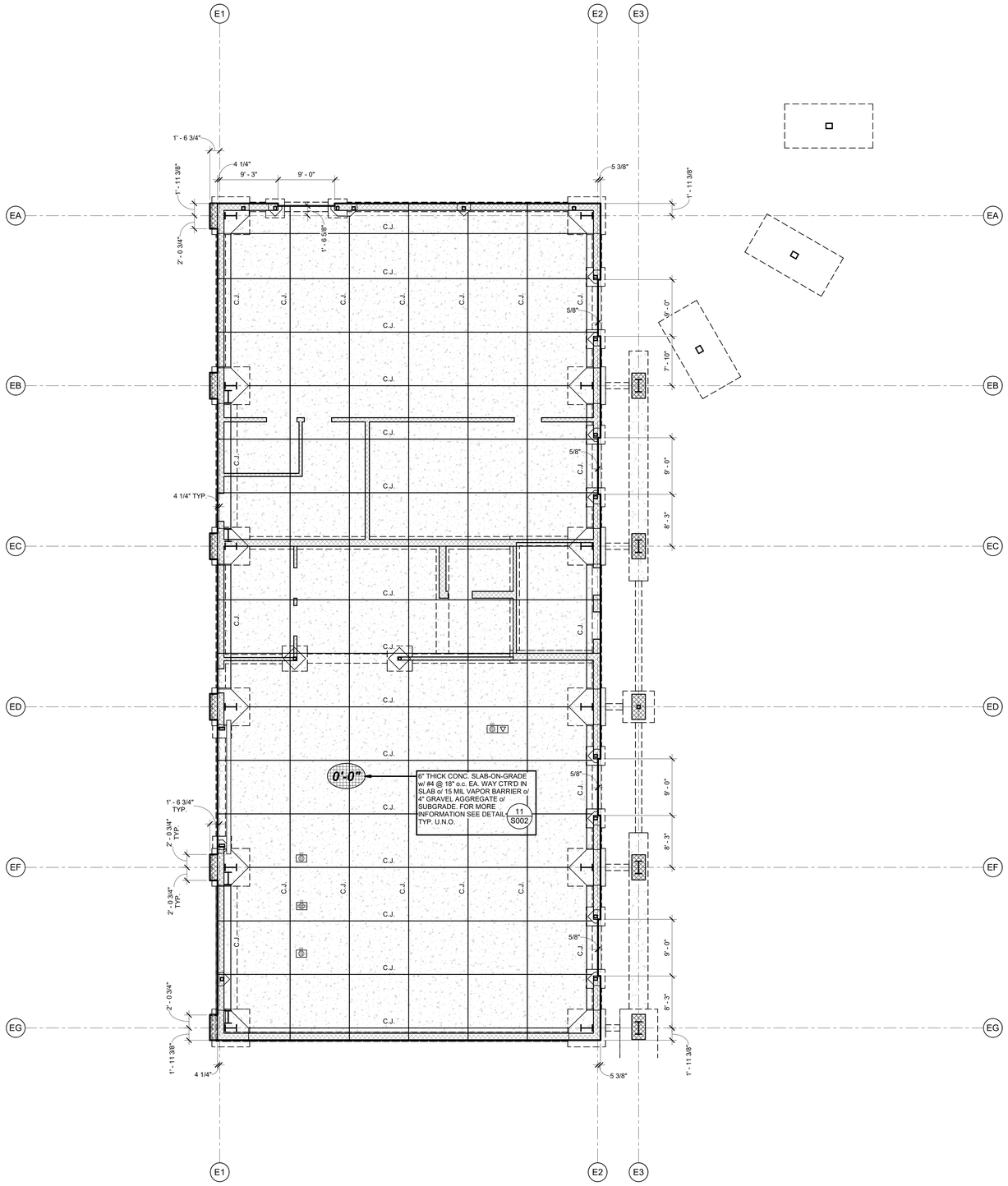

SLAB EDGE PLAN NOTES

1. THE TYPICAL DETAILS SHOWN ON THE 50XX SERIES SHEETS SHALL APPLY IN ALL CASES UNLESS SPECIFICALLY SHOWN OTHERWISE. WHERE NO DETAIL IS SHOWN, CONSTRUCTION SHALL BE AS SHOWN FOR SIMILAR WORK. SEE SHEET SPECIFICATIONS AND TYPICAL DETAILS FOR ADDITIONAL INFORMATION.
2. UNCLEAR, CONFLICTING, AND/OR MISSING INFORMATION SHALL BE BROUGHT TO THE ENGINEERS ATTENTION PRIOR TO CONSTRUCTION.
3. ALL DIMENSIONS ARE TO EDGE OF SLAB OR CENTER OF SLAB JOINT, U.N.O. COORDINATE ALL DIMENSIONS WITH ARCHITECTURAL DRAWINGS.
4. ALL COLUMNS ARE TO BE CENTERED ON GRIDS, PAD FOOTINGS, AND IN STUD WALLS, UNLESS NOTED OTHERWISE.
5. SEE CIVIL PLANS AND OR SITE PLAN FOR LOCATION AND DIMENSIONS OF SIDEWALKS, RAMPS, EXTERIOR SLABS, MOW STRIPS, AND PLANTERS.
6. FOR FLOOR DRAIN, DATA, AND FLOOR BOX LOCATIONS REFER TO ARCHITECTURAL, MECHANICAL, PLUMBING, ELECTRICAL AND TECHNOLOGY PLANS.
7. ALL EXTERIOR CONCRETE SLABS ARE TO BE POURED SEPARATE.
8. SLAB THICKNESS TO BE CONSTANT WHERE SLABS SLOPE TO DRAIN.
9. FOR SLABS ON GRADE JOINT DETAILING, SEE DETAILS 1/S003 & 3/S002.
10. ALL EMBEDDED ITEMS SHALL BE IN PLACE AND SECURE PRIOR TO POURING OF CONCRETE.
11. ALL ELEVATIONS ARE ESTABLISHED FROM AND RELATIVE TO FIRST FLOOR FINISHED SLAB (0'-0" DATUM), U.N.O. FOR ACTUAL ELEVATIONS, SEE CIVIL DRAWINGS.
12. CONCRETE SLABS ARE FINISH SURFACES AS INDICATED ON ARCHITECTURAL FINISH FLOOR PLANS. NO TEMPORARY FASTENING, HOLES, OR DEFORMATIONS ARE ALLOWED.
13. PROVIDE REENETRANT CORNER REINFORCING AT ALL PITS AND TRENCHES PER DETAIL 10/S003

LEGEND

- # — GRID BUBBLE AND NUMBER. SEE ARCHITECTURAL DRAWING PACKAGE FOR DETAILED DIMENSIONS OF ALL GRIDS SHOWN.
- 1/S400 — SECTION/ ELEVATION MARK. SEE REFERENCING DETAIL NUMBER AND SHEET NUMBER FOR ADDITIONAL INFORMATION.
- 1/S500 — DETAIL MARK. SEE REFERENCING DETAIL NUMBER AND SHEET NUMBER FOR ADDITIONAL INFORMATION.
- CONCRETE FOOTING.
- 2" — INDICATES AREA AND DEPTH OF SLAB DEPRESSION FROM FINISHED FLOOR. SEE ARCHITECTURAL DRAWINGS AND DETAIL 1/S003
- C.J. — INDICATES CONTROL JOINTS. LAYOUT SHOWN IS PRELIMINARY. FINAL LAYOUT TO BE DETERMINED BY G.C. VERIFY SPACING PER CONCRETE MIX, PLACEMENT, AND FINSIH SHEET SPECIFICATION. SEE DETAIL 2/S003
- H — INDICATES A COLUMN BLOCKOUT, SEE DETAIL 9/S003.
- INDICATES FLOOR BOX. SEE ELECTRICAL DRAWINGS.
- INDICATES 8" HIGH CONCRETE CURB. SEE ARCH. FOR CURB WIDTH

NORTH

1/8" = 1'-0"

SLAB EDGE PLAN - BUILDING E

10

NOTES & LEGEND | 4

KEYPLAN

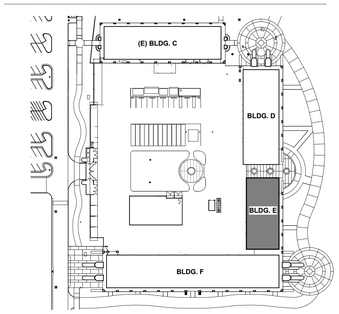

FOR BID ONLY

Teter, LLP expressly reserves its common law copyright and other property rights in these plans. This document, the ideas and designs incorporated herein, as an instrument of professional service, is not to be used in whole or part, for any other project without prior written authorization.

MARK	DATE	DESCRIPTION
	11/1/22	DSA BACKCHECK

REGISTERED PROFESSIONAL ENGINEER LUIS A. BALTA No. 55609 STATE OF CALIFORNIA STRUCTURAL

TETER, LLP
FRESNO HEADQUARTERS
VISALIA | BAKERSFIELD | MODESTO | SAN LUIS OBISPO
ARCHITECTS ENGINEERS CONNECTED

TULARE CAMPUS CTE
COLLEGE OF THE SEQUOIAS
4999 E. BARDSLEY AVE.
TULARE, CA

DRAWING TITLE
SLAB EDGE PLAN - BUILDING E

PROJECT NO.
20-12032

DRAWING
S111

PLOT DATE: 10/31/2022 3:25:22 PM

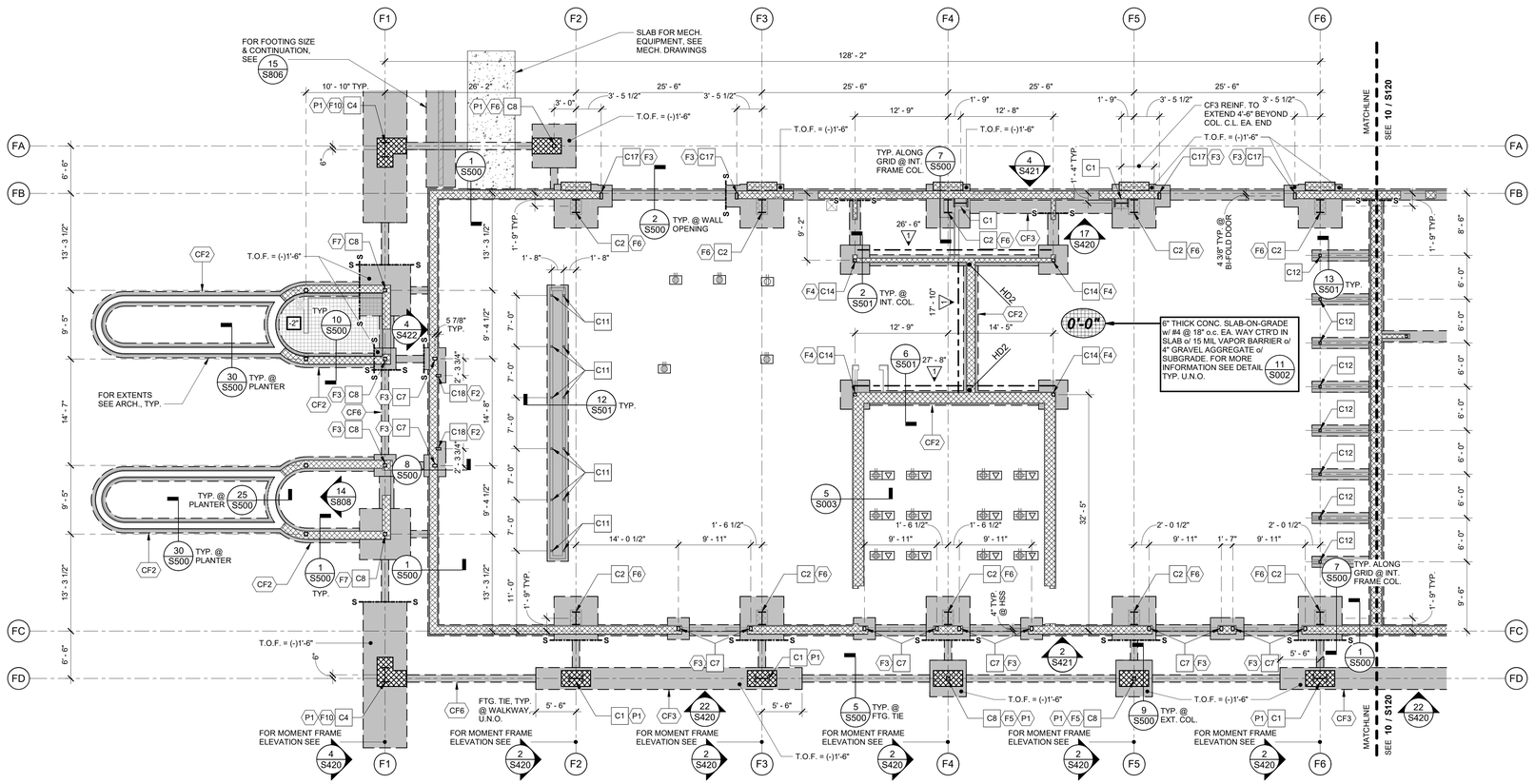

FOUNDATION PLAN - BUILDING F

1/8" = 1'-0" | 8

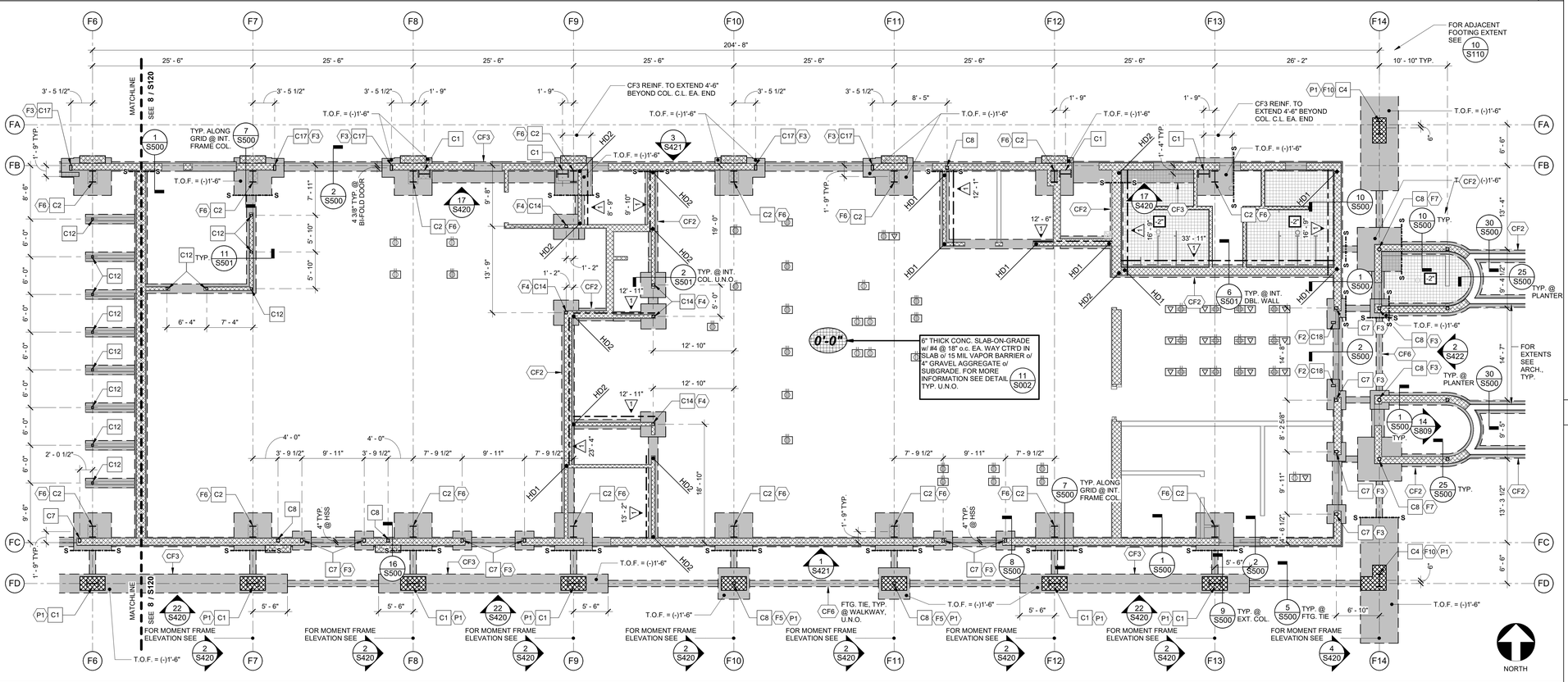

FOUNDATION PLAN - BUILDING F

1/8" = 1'-0" | 10

FOUNDATION NOTES

1. THE TYPICAL DETAILS SHOWN ON THE S0XX SHEETS SHALL APPLY IN ALL CASES, UNLESS SPECIFICALLY SHOWN OTHERWISE. WHERE NO DETAIL IS SHOWN, CONSTRUCTION SHALL BE AS SHOWN FOR SIMILAR WORK. SEE GENERAL NOTES AND TYPICAL DETAILS FOR ADDITIONAL INFORMATION.
2. UNCLEAR, CONFLICTING AND/OR MISSING INFORMATION SHALL BE BROUGHT TO THE ENGINEER'S ATTENTION PRIOR TO CONSTRUCTION.
3. ALL DIMENSIONS ARE TO FACE OF WALL STUD OR CENTER OF COLUMN, U.N.O. COORDINATE ALL DIMENSIONS WITH ARCHITECTURAL DRAWINGS.
4. ALL COLUMNS ARE TO BE CENTERED IN STUD WALLS AND ON PAD FOOTINGS, U.N.O.
5. SEE CIVIL PLANS AND OR SITE PLAN FOR LOCATION AND DIMENSIONS OF SIDEWALKS, RAMPS, EXTERIOR SLABS, MOW STRIPS AND PLANTERS.
6. FOR FLOOR DRAIN, DATA AND FLOOR BOX LOCATIONS REFER TO PLUMBING, MECHANICAL, ARCHITECTURAL, ELECTRICAL AND TECHNOLOGY PLANS.
7. ALL EXTERIOR CONCRETE SLABS ARE TO BE POURED SEPERATE.
8. FOR SLAB ON GRADE JOINT DETAILNG, SEE 1 S003 & 2 S003
9. ALL EMBEDDED ITEMS SHALL BE IN PLACE AND SECURE PRIOR TO POURING OF CONCRETE.
10. ALL CONTINUOUS FOOTINGS TO BE TYPE CF1 U.N.O.
11. TOP OF FOOTING (T.O.F.) ELEVATIONS SHALL BE (-) 1'-0", U.N.O.
12. ALL ELEVATIONS ARE ESTABLISHED FROM AND RELATIVE TO FIRST FLOOR FINISHED SLAB (0'-0" DATUM), U.N.O. FOR ACTUAL ELEVATIONS, SEE CIVIL DRAWINGS.
13. FOR PIPES/CONDUITS NEAR TO OR INTERSECTING FOUNDATIONS, SEE 15 S002
14. FOR INTERIOR NON-BEARING WALLS, SEE 3 S003
15. SEE ARCHITECTURAL DRAWINGS FOR WALL STUD SIZES AND SPACING, U.N.O.
16. FOR TYPICAL INTERIOR HSS COLUMN FOOTING DETAILS, SEE 2 S501
17. FOR TYPICAL EXTERIOR HSS COLUMN FOOTING DETAILS, SEE 3 S500 & 6 S500
18. FOR MOMENT AND PORTAL FRAME COLUMN FOOTING DETAILS, SEE ELEVATIONS.
19. CONCRETE SLABS ARE FINISH SURFACES AS INDICATED ON ARCHITECTURAL FINISH FLOOR PLANS. NO TEMPORARY FASTENING, HOLES OR DEFORMATIONS ARE ALLOWED.
20. FOR COLUMN AND FOUNDATION SCHEDULE, SEE SHEET S121.

SCHEUDLE

1. FOR FOUNDATION SCHEDULE, SEE SHEET S100.
2. FOR COLUMN SCHEDULE, SEE SHEET S100.

LEGEND

- (#) GRID BUBBLE AND NUMBER. SEE ARCHITECTURAL DRAWING PACKAGE FOR DETAILED DIMENSIONS OF ALL GRIDS SHOWN.
- 1 / S400 SECTION/ ELEVATION MARK. SEE REFERENCING DETAIL NUMBER AND SHEET NUMBER FOR ADDITIONAL INFORMATION.
- 1 / S700 DETAIL MARK. SEE REFERENCING DETAIL NUMBER AND SHEET NUMBER FOR ADDITIONAL INFORMATION.
- T.O.W. = 0'-0" ELEVATION MARK T.O.W. = TOP OF WALL T.O.F. = TOP OF FOOTING T.O.S. = TOP OF STEEL
- FX FOOTING TAG. SEE FOUNDATION SCHEDULE FOR ADDITIONAL INFORMATION.
- PX PEDESTAL TAG. SEE FOUNDATION SCHEDULE FOR ADDITIONAL INFORMATION.
- CFX CONTINUOUS FOOTING TAG. SEE FOUNDATION SCHEDULE FOR ADDITIONAL INFORMATION.
- CX COLUMN TAG. SEE COLUMN SCHEDULE FOR ADDITIONAL INFORMATION.
- CONCRETE FOOTING.
- -2" INDICATES AREA AND DEPTH OF SLAB DEPRESSION. SEE ARCHITECTURAL DRAWINGS AND DETAIL 4 S003
- INDICATES METAL STUD WALLS. FOR STUD SIZES, SPACING AND ARCHITECTURAL WALL TYPES, SEE ARCHITECTURAL DRAWINGS. FOR TYPICAL WALL FRAMING SEE DETAIL 4 S010
- INDICATES 8" HIGH CONCRETE CURB. SEE ARCH. FOR CURB WIDTH
- INDICATES FLOOR BOX. SEE ELECTRICAL DRAWINGS.
- HD1 INDICATES HOLDOWN PER 15 S011
- INDICATES METAL STUD WALL PER ARCH.
- 8 / 4' - 0" INDICATES SHEAR WALL - FOR SHEATHING SEE 1 S011
- INDICATES REQUIRED SHEAR WALL LENGTH. OVERALL WALL LENGTH SHALL BE CONTROLLED BY ARCH. DIMS.
- S-----S INDICATES STEPPED FOOTING PER DETAIL 18 S002 STEP OCCURING AT TIE FOOTING MAY SLOPE FOR ELEVATION CHANGE.
- INDICATES FLOOR DRAIN. SEE PLUMBING FOR ADDITIONAL INFORMATION.

NOTES & LEGEND | 4

KEYPLAN

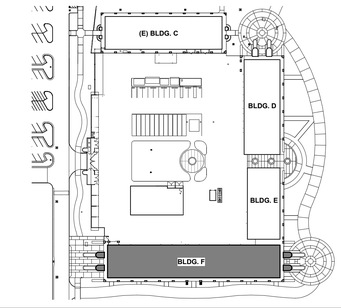

FOR BID ONLY

Teter, LLP expressly reserves its common law copyright and other property rights in these plans. This document, the ideas and designs incorporated herein, as an instrument of professional service, is not to be used in whole or in part, for any other project without prior written authorization.

MARK	DATE	DESCRIPTION
	11/1/22	DSA BACKCHECK

REGISTERED PROFESSIONAL ENGINEER * STEVEN S. BAILEY * No. 55609 * STRUCTURAL * STATE OF CALIFORNIA

TETER, LLP
ARCHITECTS ENGINEERS CONNECTED
FRESNO HEADQUARTERS
VISALIA | BAKERSFIELD | MODESTO | SAN LUIS OBISPO

TULARE CAMPUS CTE
COLLEGE OF THE SEQUOIAS
4999 E. BARDSLEY AVE.
TULARE, CA

DRAWING TITLE
FOUNDATION PLAN - BUILDING F

PROJECT NO.
20-12032

DRAWING
S120

PLOT DATE: 10/31/2022 3:25:30 PM

\\tet-file1\Users\luis.valtierra\Documents\12032-S-COS Tulare CTE_luis.valtierra.rvt

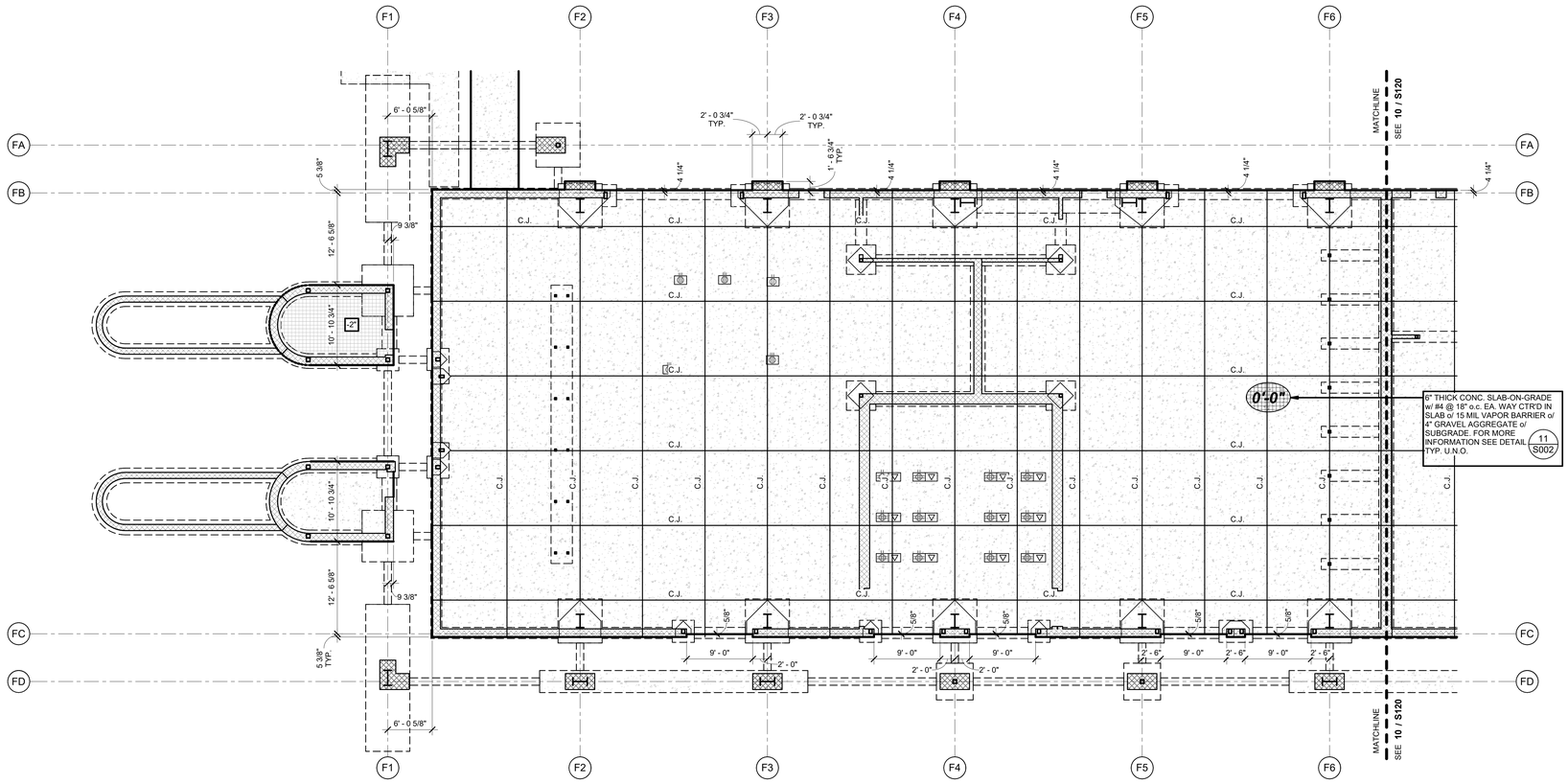

SLAB EDGE PLAN - BUILDING F

1/8" = 1'-0" | 8

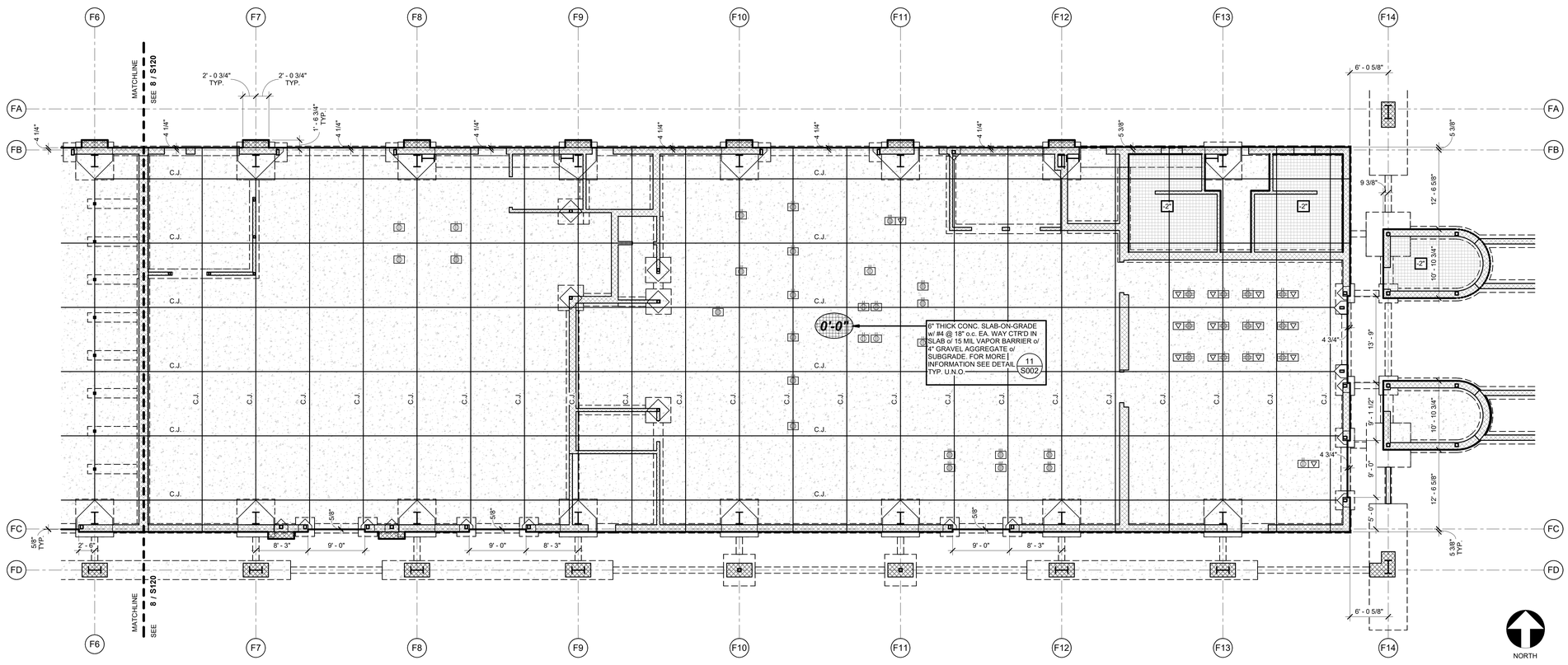

SLAB EDGE PLAN - BUILDING F

1/8" = 1'-0" | 10

SLAB EDGE PLAN NOTES

1. THE TYPICAL DETAILS SHOWN ON THE S0XX SERIES SHEETS SHALL APPLY IN ALL CASES UNLESS SPECIFICALLY SHOWN OTHERWISE. WHERE NO DETAIL IS SHOWN, CONSTRUCTION SHALL BE AS SHOWN FOR SIMILAR WORK. SEE SHEET SPECIFICATIONS AND TYPICAL DETAILS FOR ADDITIONAL INFORMATION.
2. UNCLEAR, CONFLICTING, AND/OR MISSING INFORMATION SHALL BE BROUGHT TO THE ENGINEERS ATTENTION PRIOR TO CONSTRUCTION.
3. ALL DIMENSIONS ARE TO EDGE OF SLAB OR CENTER OF SLAB JOINT, U.N.O. COORDINATE ALL DIMENSIONS WITH ARCHITECTURAL DRAWINGS.
4. ALL COLUMNS ARE TO BE CENTERED ON GRIDS, PAD FOOTINGS, AND IN STUD WALLS, UNLESS NOTED OTHERWISE.
5. SEE CIVIL PLANS AND OR SITE PLAN FOR LOCATION AND DIMENSIONS OF SIDEWALKS, RAMPS, EXTERIOR SLABS, MOW STRIPS, AND PLANTERS.
6. FOR FLOOR DRAIN, DATA, AND FLOOR BOX LOCATIONS REFER TO ARCHITECTURAL, MECHANICAL, PLUMBING, ELECTRICAL AND TECHNOLOGY PLANS.
7. ALL EXTERIOR CONCRETE SLABS ARE TO BE POURED SEPARATE.
8. SLAB THICKNESS TO BE CONSTANT WHERE SLABS SLOPE TO DRAIN.
9. FOR SLABS ON GRADE JOINT DETAILING, SEE DETAILS 1/S003 & 3/S002
10. ALL EMBEDDED ITEMS SHALL BE IN PLACE AND SECURE PRIOR TO POURING OF CONCRETE.
11. ALL ELEVATIONS ARE ESTABLISHED FROM AND RELATIVE TO FIRST FLOOR FINISHED SLAB (0'-0" DATUM), U.N.O. FOR ACTUAL ELEVATIONS, SEE CIVIL DRAWINGS.
12. CONCRETE SLABS ARE FINISH SURFACES AS INDICATED ON ARCHITECTURAL FINISH FLOOR PLANS. NO TEMPORARY FASTENING, HOLES, OR DEFORMATIONS ARE ALLOWED.
13. PROVIDE REENETRANT CORNER REINFORCING AT ALL PITS AND TRENCHES PER DETAIL 10/S003

LEGEND

- # — GRID BUBBLE AND NUMBER. SEE ARCHITECTURAL DRAWING PACKAGE FOR DETAILED DIMENSIONS OF ALL GRIDS SHOWN.
- 1/S400 — SECTION/ ELEVATION MARK. SEE REFERENCING DETAIL NUMBER AND SHEET NUMBER FOR ADDITIONAL INFORMATION.
- 1/S500 — DETAIL MARK. SEE REFERENCING DETAIL NUMBER AND SHEET NUMBER FOR ADDITIONAL INFORMATION.
- CONCRETE FOOTING.
- -2" — INDICATES AREA AND DEPTH OF SLAB DEPRESSION FROM FINISHED FLOOR. SEE ARCHITECTURAL DRAWINGS AND DETAIL 4/S003
- C.J. — INDICATES CONTROL JOINTS. LAYOUT SHOWN IS PRELIMINARY. FINAL LAYOUT TO BE DETERMINED BY G.C. VERIFY SPACING PER CONCRETE MIX, PLACEMENT, AND FINSIH SHEET SPECIFICATION. SEE DETAIL 2/S003.
- INDICATES A COLUMN BLOCKOUT, SEE DETAIL 9/S003.
- INDICATES FLOOR BOX. SEE ELECTRICAL DRAWINGS.
- INDICATES 8" HIGH CONCRETE CURB. SEE ARCH. FOR CURB WIDTH

NOTES & LEGEND | 4

KEYPLAN

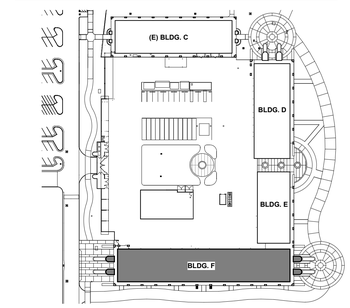

FOR BID ONLY

Teter, LLP expressly reserves its common law copyright and other property rights in these plans. This document, the ideas and designs incorporated herein, as an instrument of professional service, is not to be used in whole or in part, for any other project without prior written authorization.

MARK	DATE	DESCRIPTION
	11/1/22	DSA BACKCHECK

REGISTERED PROFESSIONAL ENGINEER STEVEN S. BAILEY No. 55699 STRUCTURAL STATE OF CALIFORNIA

TETER, LLP
ARCHITECTS ENGINEERS CONNECTED
FRESNO HEADQUARTERS
VISALIA | BAKERSFIELD | MODESTO | SAN LUIS OBISPO

TETER

TULARE CAMPUS CTE
COLLEGE OF THE SEQUOIAS
4999 E. BARDSLEY AVE.
TULARE, CA

DRAWING TITLE
SLAB EDGE PLAN - BUILDING F

PROJECT NO.
20-12032

DRAWING
S121

PLOT DATE: 10/31/2022 3:25:35 PM

\\tet-file1\Users\luis.valtierra\Documents\12032-S-COS Tulare CTE_luis.valtierra.rvt

\\tet-file1\Users\luis.valtierra\Documents\12032-S-COS Tulare CTE_luis.valtierra.rvt

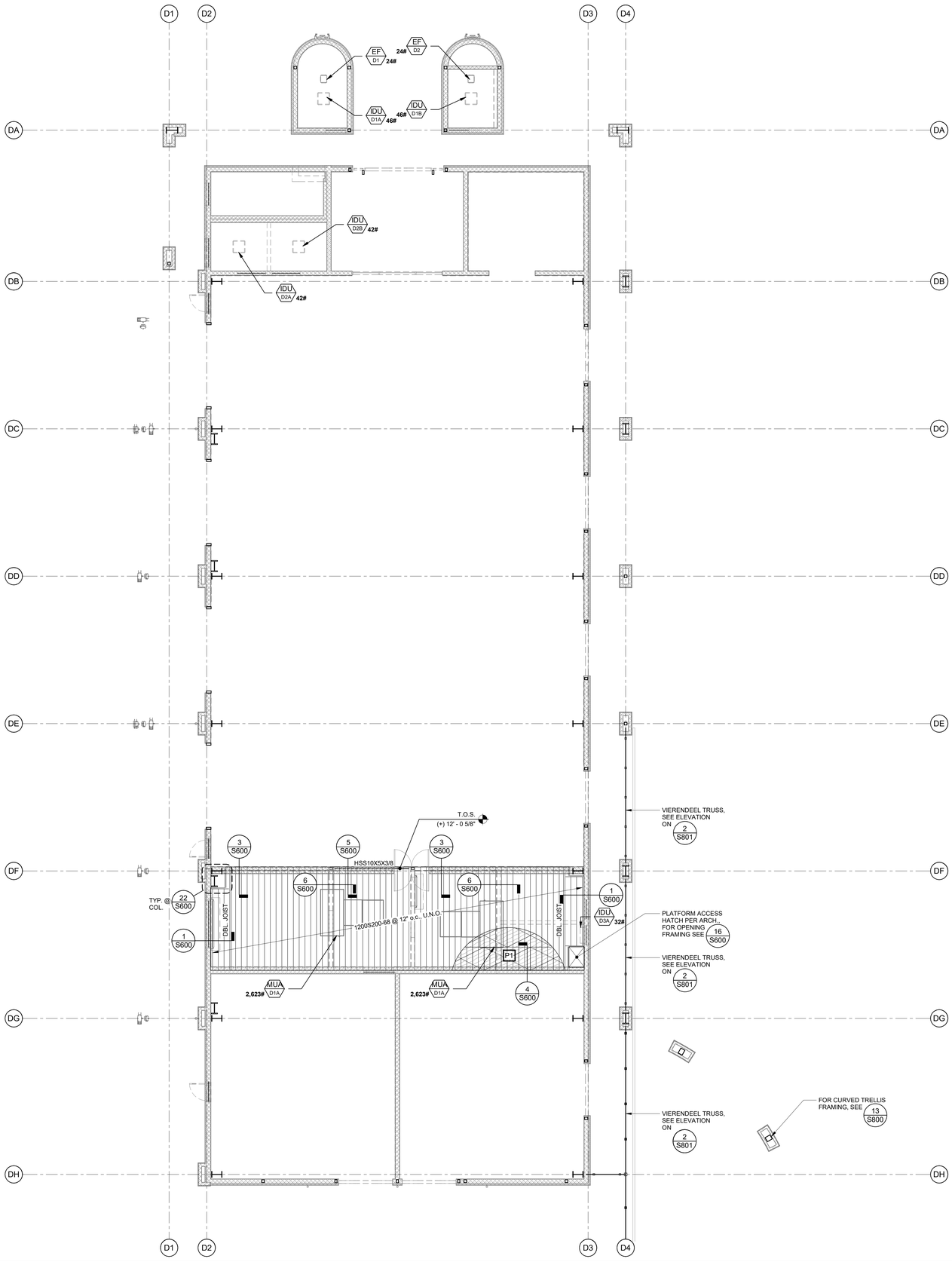

NORTH

PLATFORM FRAMING NOTES

1. MEZZANINE NOTES APPLY TO THIS SHEET ONLY.
2. THE TYPICAL DETAILS SHOWN ON THE S002 THROUGH S0XX SHEETS SHALL APPLY IN ALL CASES, UNLESS SPECIFICALLY SHOWN OTHERWISE. WHERE NO DETAIL IS SHOWN, CONSTRUCTION SHALL BE AS SHOWN FOR SIMILAR WORK. SEE GENERAL NOTES AND TYPICAL DETAILS FOR ADDITIONAL INFORMATION.
3. UNCLEAR, CONFLICTING AND/OR MISSING INFORMATION SHALL BE BROUGHT TO THE ENGINEER'S ATTENTION PRIOR TO CONSTRUCTION.
4. ALL DIMENSIONS ARE TO FACE OF WALL STUD OR CENTER OF COLUMN, U.N.O. COORDINATE ALL DIMENSIONS WITH ARCHITECTURAL DRAWINGS.
5. SEE FOUNDATION PLAN FOR COLUMNS SHOWN BUT NOT NOTED.
6. ALL ELEVATIONS ARE ESTABLISHED FROM AND RELATIVE TO FIRST FLOOR FINISHED SLAB (0'-0" DATUM), U.N.O. FOR ACTUAL ELEVATIONS, SEE CIVIL DRAWINGS.
7. STEEL MEMBERS ARE EQUALLY SPACED BETWEEN DIMENSION POINTS, U.N.O., AND SHALL FRAME TO CENTERLINE OF COLUMNS OR WORK POINT.
8. SEE ARCHITECTURAL DRAWINGS FOR WALL STUD SIZES AND SPACING, U.N.O.
9. ALL MECHANICAL UNITS SHALL BE VERIFIED WITH MECHANICAL CONTRACTOR PRIOR TO CONSTRUCTION. SEE ARCHITECTURAL DRAWINGS.
10. SEE ARCHITECTURAL PLANS FOR PLUMBING PENETRATIONS.
11. FOR TYPICAL HSS BEAM TO HSS COLUMN CONNECTIONS, SEE DETAIL 8 S005
12. WHERE PLATFORM FRAMING BEARS ON TOP OF STUD WALL, PROVIDE WALL STUDS TO MATCH JOIST SPACING AND ALIGN/BEAR ALL JOISTS WITH WALL STUDS FOR DIRECT BEARING/CONNECTIONS. FOR ADDITIONAL INFORMATION SEE DETAIL 25 S011
13. FOR BEARING/SHEAR WALL TOP CONNECTION, SEE 6 S600 & 7 S600, U.N.O.
14. FOR NON-BEARING/NON-SHEAR WALL TOP CONNECTION, SEE 11 S600 & 12 S600, U.N.O.
15. ALL PLYWOOD SHEATHING USED SHALL BE FIRE RETARDANT TREATED.
16. PROVIDE CONTINUOUS BLOCKING FOR PLATFORM FRAMING AT 8'-0" o.c. PER 1 S012

PLATFORM DESIGN LOADS

ROOF DEAD LOAD	
3/4" PLYWOOD (FIRE RETARDANT TREATED)	2.3 PSF
METAL STUD JOISTS	4.0 PSF
5/8" GYPSUM BOARD	3.1 PSF
CONDUIT, LIGHTING	1.0 PSF
SPRINKLERS	1.0 PSF
MECHANICAL DUCT WORK	2.0 PSF
MISCELLANEOUS	1.6 PSF
TOTAL	**15.0 PSF**
FLOOR LIVE LOAD	
LIVE LOAD (ACCESS)	40.0 PSF

LEGEND

- 1 — GRID BUBBLE AND NUMBER. SEE ARCHITECTURAL DRAWING PACKAGE FOR DETAILED DIMENSIONS OF ALL GRIDS SHOWN.
- 1 / S400 — SECTION/ ELEVATION MARK. SEE REFERENCING DETAIL NUMBER AND SHEET NUMBER FOR ADDITIONAL INFORMATION.
- 1 / S700 — DETAIL MARK. SEE REFERENCING DETAIL NUMBER AND SHEET NUMBER FOR ADDITIONAL INFORMATION.
- CX — COLUMN TAG. SEE COLUMN SCHEDULE ON FOUNDATION PLAN FOR ADDITIONAL INFORMATION.
- T.O.W. = 0'-0" — ELEVATION MARK
  T.O.W. = TOP OF WALL
  T.O. FTG. = TOP OF FOOTING
  T.O. S. = TOP OF STEEL
- HC / XXX# / XX — INDICATES MECHANICAL UNIT MAX. WEIGHT. FOR TYP. SUPPORT AND ATTACHMENT DETAILS SEE MECHANICAL DRAWINGS AND DETAIL 17 S600
- W16x26 (c=1") — FRAME BEAM ID
  c = CAMBER
- INDICATES WALL BELOW PLATFORM STRUCTURE, SEE 25 S011
- INDICATES HEADER BELOW, SEE DETAIL 4 S010
- INDICATES METAL STUD WALLS ABOVE PLATFORM FRAMING LEVEL. FOR STUD SIZES, SPACING AND ARCHITECTURAL WALL TYPES, SEE ARCHITECTURAL DRAWINGS. FOR WALL FRAMING SEE DETAIL 4 S010
- P1 — INDICATES 3/4" FIRE RETARDANT TREATED PLYWOOD SHEATHING (48/24 RATING) w/ #10 S.M.S. (WOOD TO METAL) @ 6" o.c. AT EDGES AND 12" o.c. IN FIELD. PROVIDE T&G PANEL EDGES OR COLD-FORMED FLAT BLOCKING AT ALL PANEL EDGES. FASTENING PER 4 S011
- INDICATES PLATFORM OPENING, SEE DETAIL 16 S600
- INDICATES HOSE REEL. FOR LOCATION AND SUPPORT DETAILS, SEE ARCHITECTURAL DRAWINGS

NOTES, SCHEDULE & LEGEND | 4

KEYPLAN

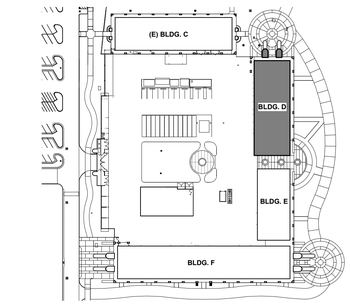

PLATFORM FRAMING PLAN - BUILDING D | 1/8" = 1'-0" | 10

PLOT DATE: 10/31/2022 3:25:39 PM

FOR BID ONLY

Teter, LLP expressly reserves its common law copyright and other property rights in these plans. This document, the ideas and designs incorporated herein, as an instrument of professional service, is not to be used in whole or part, for any other project without prior written authorization.

MARK	DATE	DESCRIPTION
	11/1/22	DSA BACKCHECK

REGISTERED PROFESSIONAL ENGINEER — LUIS S. BALTIERRA — No. 55609 — STRUCTURAL — STATE OF CALIFORNIA

TETER, LLP
FRESNO HEADQUARTERS
VISALIA | BAKERSFIELD | MODESTO | SAN LUIS OBISPO
ARCHITECTS ENGINEERS CONNECTED

TETER

TULARE CAMPUS CTE
COLLEGE OF THE SEQUOIAS
4999 E. BARDSLEY AVE.
TULARE, CA

DRAWING TITLE
PLATFORM FRAMING PLAN - BUILDING D

PROJECT NO.
20-12032

DRAWING
S200

\\tet-file1\Users\luis.valtierra\Documents\12032-S-COS Tulare CTE_luis.valtierra.rvt

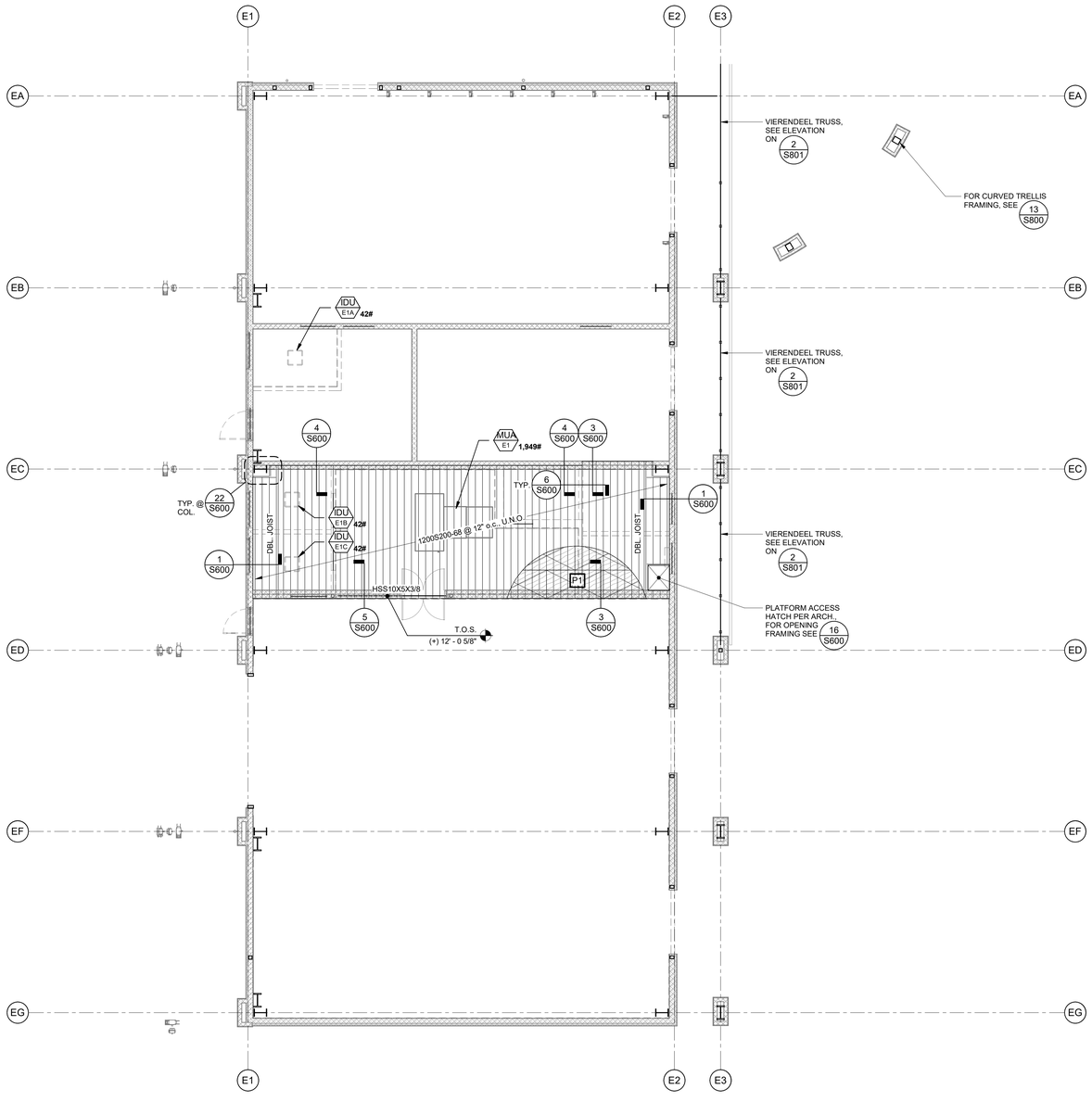

PLATFORM FRAMING NOTES

1. MEZZANINE NOTES APPLY TO THIS SHEET ONLY.
2. THE TYPICAL DETAILS SHOWN ON THE S002 THROUGH S0XX SHEETS SHALL APPLY IN ALL CASES, UNLESS SPECIFICALLY SHOWN OTHERWISE. WHERE NO DETAIL IS SHOWN, CONSTRUCTION SHALL BE AS SHOWN FOR SIMILAR WORK. SEE GENERAL NOTES AND TYPICAL DETAILS FOR ADDITIONAL INFORMATION.
3. UNCLEAR, CONFLICTING AND/OR MISSING INFORMATION SHALL BE BROUGHT TO THE ENGINEER'S ATTENTION PRIOR TO CONSTRUCTION.
4. ALL DIMENSIONS ARE TO FACE OF WALL STUD OR CENTER OF COLUMN, U.N.O. COORDINATE ALL DIMENSIONS WITH ARCHITECTURAL DRAWINGS.
5. SEE FOUNDATION PLAN FOR COLUMNS SHOWN BUT NOT NOTED.
6. ALL ELEVATIONS ARE ESTABLISHED FROM AND RELATIVE TO FIRST FLOOR FINISHED SLAB (0'-0" DATUM), U.N.O. FOR ACTUAL ELEVATIONS, SEE CIVIL DRAWINGS.
7. STEEL MEMBERS ARE EQUALLY SPACED BETWEEN DIMENSION POINTS, U.N.O., AND SHALL FRAME TO CENTERLINE OF COLUMNS OR WORK POINT.
8. SEE ARCHITECTURAL DRAWINGS FOR WALL STUD SIZES AND SPACING, U.N.O.
9. ALL MECHANICAL UNITS SHALL BE VERIFIED WITH MECHANICAL CONTRACTOR PRIOR TO CONSTRUCTION. SEE ARCHITECTURAL DRAWINGS.
10. SEE ARCHITECTURAL PLANS FOR PLUMBING PENETRATIONS.
11. FOR TYPICAL HSS BEAM TO HSS COLUMN CONNECTIONS, SEE DETAIL 8 S005
12. WHERE PLATFORM FRAMING BEARS ON TOP OF STUD WALL, PROVIDE WALL STUDS TO MATCH JOIST SPACING AND ALIGN/BEAR ALL JOISTS WITH WALL STUDS FOR DIRECT BEARING/CONNECTIONS. FOR ADDITIONAL INFORMATION SEE DETAIL 25 S011
13. FOR BEARING/SHEAR WALL TOP CONNECTION, SEE 6 S600 & 7 S600, U.N.O.
14. FOR NON-BEARING/NON-SHEAR WALL TOP CONNECTION, SEE 11 S600 & 12 S600, U.N.O.
15. ALL PLYWOOD SHEATHING USED SHALL BE FIRE RETARDANT TREATED.
16. PROVIDE CONTINUOUS BLOCKING FOR PLATFORM FRAMING AT 8'-0" o.c. PER 1 S012

PLATFORM DESIGN LOADS

ROOF DEAD LOAD	
3/4" PLYWOOD (FIRE RETARDANT TREATED)	2.3 PSF
METAL STUD JOISTS	4.0 PSF
5/8" GYPSUM BOARD	3.1 PSF
CONDUIT, LIGHTING	1.0 PSF
SPRINKLERS	1.0 PSF
MECHANICAL DUCT WORK	2.0 PSF
MISCELLANEOUS	1.6 PSF
TOTAL	**15.0 PSF**

FLOOR LIVE LOAD	
LIVE LOAD (ACCESS)	40.0 PSF

LEGEND

- 1 — GRID BUBBLE AND NUMBER. SEE ARCHITECTURAL DRAWING PACKAGE FOR DETAILED DIMENSIONS OF ALL GRIDS SHOWN.
- 1 / S400 — SECTION/ ELEVATION MARK. SEE REFERENCING DETAIL NUMBER AND SHEET NUMBER FOR ADDITIONAL INFORMATION.
- 1 / S700 — DETAIL MARK. SEE REFERENCING DETAIL NUMBER AND SHEET NUMBER FOR ADDITIONAL INFORMATION.
- CX — COLUMN TAG. SEE COLUMN SCHEDULE ON FOUNDATION PLAN FOR ADDITIONAL INFORMATION.
- T.O.W. = 0'-0" — ELEVATION MARK
  T.O.W. = TOP OF WALL
  T.O. FTG. = TOP OF FOOTING
  T.O. S. = TOP OF STEEL
- XXX# HC / XX — INDICATES MECHANICAL UNIT MAX. WEIGHT. FOR TYP. SUPPORT AND ATTACHMENT DETAILS SEE MECHANICAL DRAWINGS AND DETAIL 17 S600
- W16x26 (c=1") — FRAME BEAM ID
  c = CAMBER
- INDICATES WALL BELOW PLATFORM STRUCTURE, SEE 25 S011
- INDICATES HEADER BELOW, SEE DETAIL 4 S010
- INDICATES METAL STUD WALLS ABOVE PLATFORM FRAMING LEVEL. FOR STUD SIZES, SPACING AND ARCHITECTURAL WALL TYPES, SEE ARCHITECTURAL DRAWINGS. FOR WALL FRAMING SEE DETAIL 4 S010
- P1 — INDICATES 3/4" FIRE RETARDANT TREATED PLYWOOD SHEATHING (48/24 RATING) w/ #10 S.M.S. (WOOD TO METAL) @ 6" o.c. AT EDGES AND 12" o.c. IN FIELD. PROVIDE T&G PANEL EDGES OR COLD-FORMED FLAT BLOCKING AT ALL PANEL EDGES. FASTENING PER 4 S017
- INDICATES PLATFORM OPENING, SEE DETAIL 16 S600
- INDICATES HOSE REEL. FOR LOCATION AND SUPPORT DETAILS, SEE ARCHITECTURAL DRAWINGS

NOTES, SCHEDULE & LEGEND | 4

KEYPLAN

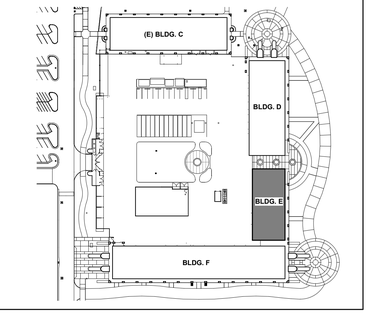

NORTH

PLATFORM FRAMING PLAN - BUILDING E | 1/8" = 1'-0" | 10

PLOT DATE: 10/31/2022 3:25:42 PM

FOR BID ONLY

Teter, LLP expressly reserves its common law copyright and other property rights in these plans. This document, the ideas and designs incorporated herein, as an instrument of professional service, is not to be used in whole or part, for any purpose or project, without prior written authorization.

MARK	DATE	DESCRIPTION
	11/1/22	DSA BACKCHECK

TETER, LLP
FRESNO HEADQUARTERS
VISALIA | BAKERSFIELD | MODESTO | SAN LUIS OBISPO
ARCHITECTS ENGINEERS CONNECTED

TULARE CAMPUS CTE
COLLEGE OF THE SEQUOIAS
4999 E. BARDSLEY AVE.
TULARE, CA

DRAWING TITLE
PLATFORM FRAMING PLAN - BUILDING E

PROJECT NO.
20-12032

DRAWING
S210

\\teter-file1\Users\luis.valtierra\Documents\12032-S-COS Tulare CTE_luis.valtierra.rvt

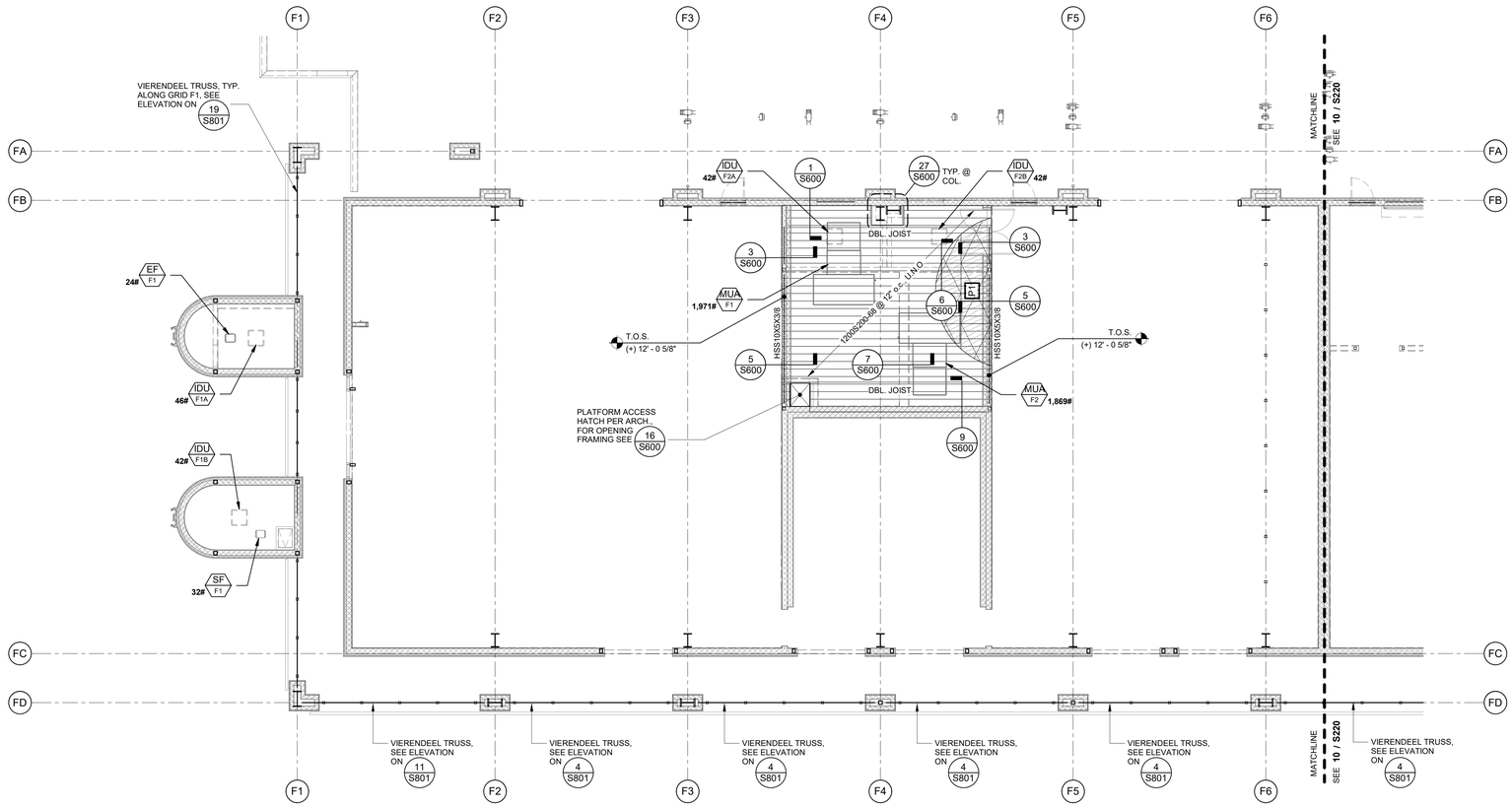

PLATFORM FRAMING PLAN - BUILDING F — 1/8" = 1'-0" — 8

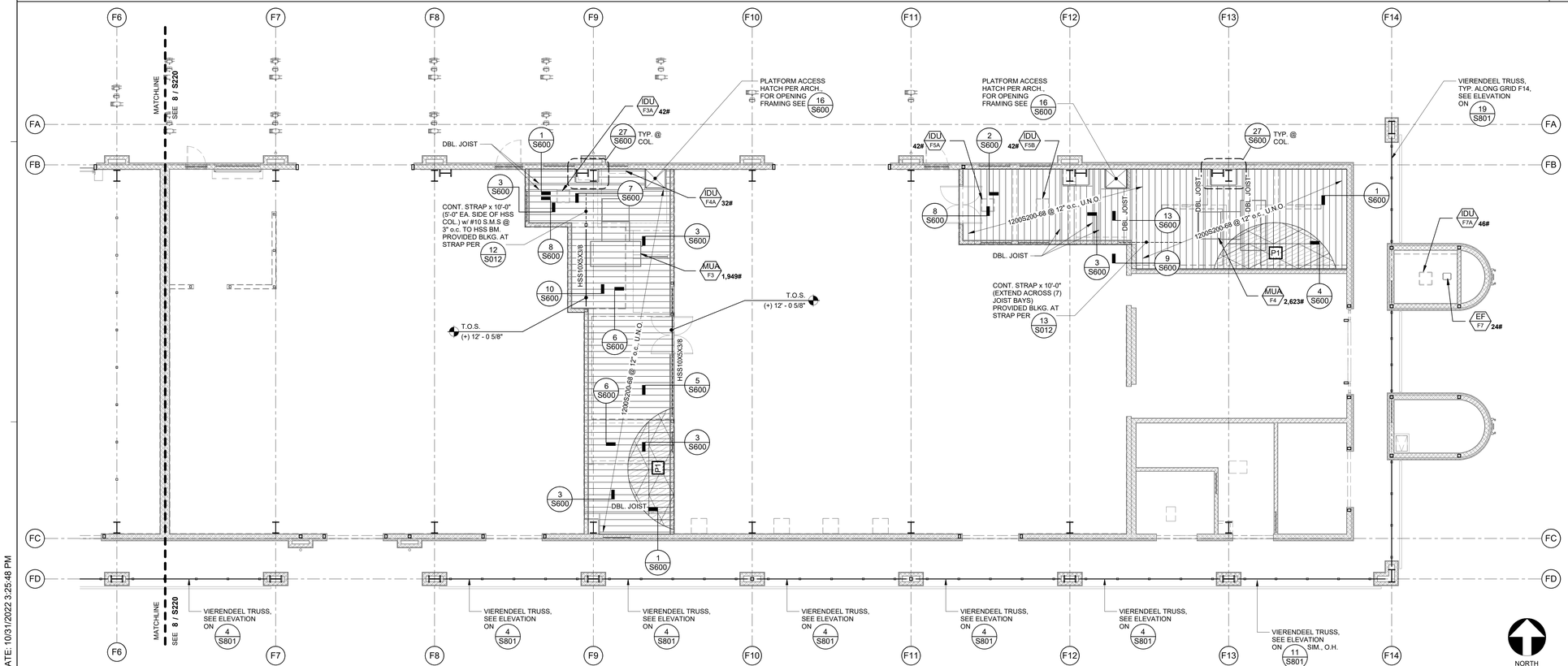

PLATFORM FRAMING PLAN - BUILDING F — 1/8" = 1'-0" — 10

PLATFORM FRAMING NOTES

1. MEZZANINE NOTES APPLY TO THIS SHEET ONLY.
2. THE TYPICAL DETAILS SHOWN ON THE S002 THROUGH S0XX SHEETS SHALL APPLY IN ALL CASES, UNLESS SPECIFICALLY SHOWN OTHERWISE. WHERE NO DETAIL IS SHOWN, CONSTRUCTION SHALL BE AS SHOWN FOR SIMILAR WORK. SEE GENERAL NOTES AND TYPICAL DETAILS FOR ADDITIONAL INFORMATION.
3. UNCLEAR, CONFLICTING AND/OR MISSING INFORMATION SHALL BE BROUGHT TO THE ENGINEER'S ATTENTION PRIOR TO CONSTRUCTION.
4. ALL DIMENSIONS ARE TO FACE OF WALL STUD OR CENTER OF COLUMN, U.N.O. COORDINATE ALL DIMENSIONS WITH ARCHITECTURAL DRAWINGS.
5. SEE FOUNDATION PLAN FOR COLUMNS SHOWN BUT NOT NOTED.
6. ALL ELEVATIONS ARE ESTABLISHED FROM AND RELATIVE TO FIRST FLOOR FINISHED SLAB (0'-0" DATUM), U.N.O. FOR ACTUAL ELEVATIONS, SEE CIVIL DRAWINGS.
7. STEEL MEMBERS ARE EQUALLY SPACED BETWEEN DIMENSION POINTS, U.N.O., AND SHALL FRAME TO CENTERLINE OF COLUMNS OR WORK POINT.
8. SEE ARCHITECTURAL DRAWINGS FOR WALL STUD SIZES AND SPACING, U.N.O.
9. ALL MECHANICAL UNITS SHALL BE VERIFIED WITH MECHANICAL CONTRACTOR PRIOR TO CONSTRUCTION. SEE ARCHITECTURAL DRAWINGS.
10. SEE ARCHITECTURAL PLANS FOR PLUMBING PENETRATIONS.
11. FOR TYPICAL HSS BEAM TO HSS COLUMN CONNECTIONS, SEE DETAIL 8 S005
12. WHERE PLATFORM FRAMING BEARS ON TOP OF STUD WALL, PROVIDE WALL STUDS TO MATCH JOIST SPACING AND ALIGN/BEAR ALL JOISTS WITH WALL STUDS FOR DIRECT BEARING/CONNECTIONS. FOR ADDITIONAL INFORMATION SEE DETAIL 25 S011
13. FOR BEARING/SHEAR WALL TOP CONNECTION, SEE 8 S600 & 7 S600, U.N.O.
14. FOR NON-BEARING/NON-SHEAR WALL TOP CONNECTION, SEE 11 S600 & 12 S600, U.N.O.
15. ALL PLYWOOD SHEATHING USED SHALL BE FIRE RETARDANT TREATED.
16. PROVIDE CONTINUOUS BLOCKING FOR PLATFORM FRAMING AT 8'-0" o.c. PER S012

PLATFORM DESIGN LOADS

ROOF DEAD LOAD	
3/4" PLYWOOD (FIRE RETARDANT TREATED)	2.3 PSF
METAL STUD JOISTS	4.0 PSF
5/8" GYPSUM BOARD	3.1 PSF
CONDUIT, LIGHTING	1.0 PSF
SPRINKLERS	1.0 PSF
MECHANICAL DUCT WORK	2.0 PSF
MISCELLANEOUS	1.6 PSF
TOTAL	**15.0 PSF**
FLOOR LIVE LOAD	
LIVE LOAD (ACCESS)	40.0 PSF

LEGEND

- 1 — GRID BUBBLE AND NUMBER. SEE ARCHITECTURAL DRAWING PACKAGE FOR DETAILED DIMENSIONS OF ALL GRIDS SHOWN.
- 1 / S400 — SECTION/ ELEVATION MARK. SEE REFERENCING DETAIL NUMBER AND SHEET NUMBER FOR ADDITIONAL INFORMATION.
- 1 / S700 — DETAIL MARK. SEE REFERENCING DETAIL NUMBER AND SHEET NUMBER FOR ADDITIONAL INFORMATION.
- CX — COLUMN TAG. SEE COLUMN SCHEDULE ON FOUNDATION PLAN FOR ADDITIONAL INFORMATION.
- T.O.W. = 0'-0" — ELEVATION MARK. T.O.W. = TOP OF WALL; T.O. FTG. = TOP OF FOOTING; T.O. S. = TOP OF STEEL
- HC XX / XXX# — INDICATES MECHANICAL UNIT MAX. WEIGHT. FOR TYP. SUPPORT AND ATTACHMENT DETAILS SEE MECHANICAL DRAWINGS AND DETAIL 17 S600
- W16x26 (c=1") — FRAME BEAM ID; c = CAMBER
- INDICATES WALL BELOW PLATFORM STRUCTURE, SEE 25 S011
- INDICATES HEADER BELOW, SEE DETAIL 4 S010
- INDICATES METAL STUD WALLS ABOVE PLATFORM FRAMING LEVEL. FOR STUD SIZES, SPACING AND ARCHITECTURAL WALL TYPES, SEE ARCHITECTURAL DRAWINGS. FOR WALL FRAMING SEE DETAIL 1 S010
- P1 — INDICATES 3/4" FIRE RETARDANT TREATED PLYWOOD SHEATHING (48/24 RATING) w/ #10 S.M.S. (WOOD TO METAL) @ 6" o.c. AT EDGES AND 12" o.c. IN FIELD. PROVIDE T&G PANEL EDGES OR COLD-FORMED FLAT BLOCKING AT ALL PANEL EDGES. FASTENING PER 4 S011
- INDICATES PLATFORM OPENING, SEE DETAIL 16 S600
- INDICATES HOSE REEL. FOR LOCATION AND SUPPORT DETAILS, SEE ARCHITECTURAL DRAWINGS

NOTES, SCHEDULE & LEGEND — 4

KEYPLAN

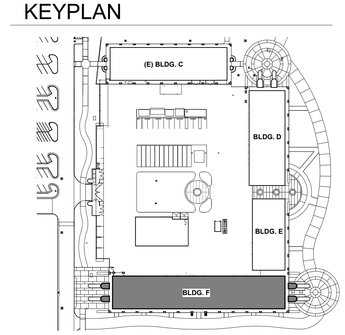

FOR BID ONLY

Teter, LLP expressly reserves its common law copyright and other property rights in these plans. This document, the ideas and designs incorporated herein, as an instrument of professional service, is not to be used in whole or in part, for any other project without prior written authorization.

MARK	DATE	DESCRIPTION
	11/1/22	DSA BACKCHECK

REGISTERED PROFESSIONAL ENGINEER — LUIS S. BALTIERRA — No. 55695 — STRUCTURAL — STATE OF CALIFORNIA

TETER, LLP
FRESNO HEADQUARTERS
VISALIA | BAKERSFIELD | MODESTO | SAN LUIS OBISPO
ARCHITECTS ENGINEERS CONNECTED

TULARE CAMPUS CTE
COLLEGE OF THE SEQUOIAS
4999 E. BARDSLEY AVE.
TULARE, CA

DRAWING TITLE: PLATFORM FRAMING PLAN - BUILDING F

PROJECT NO. 20-12032

DRAWING S220

PLOT DATE: 10/31/2022 3:25:48 PM

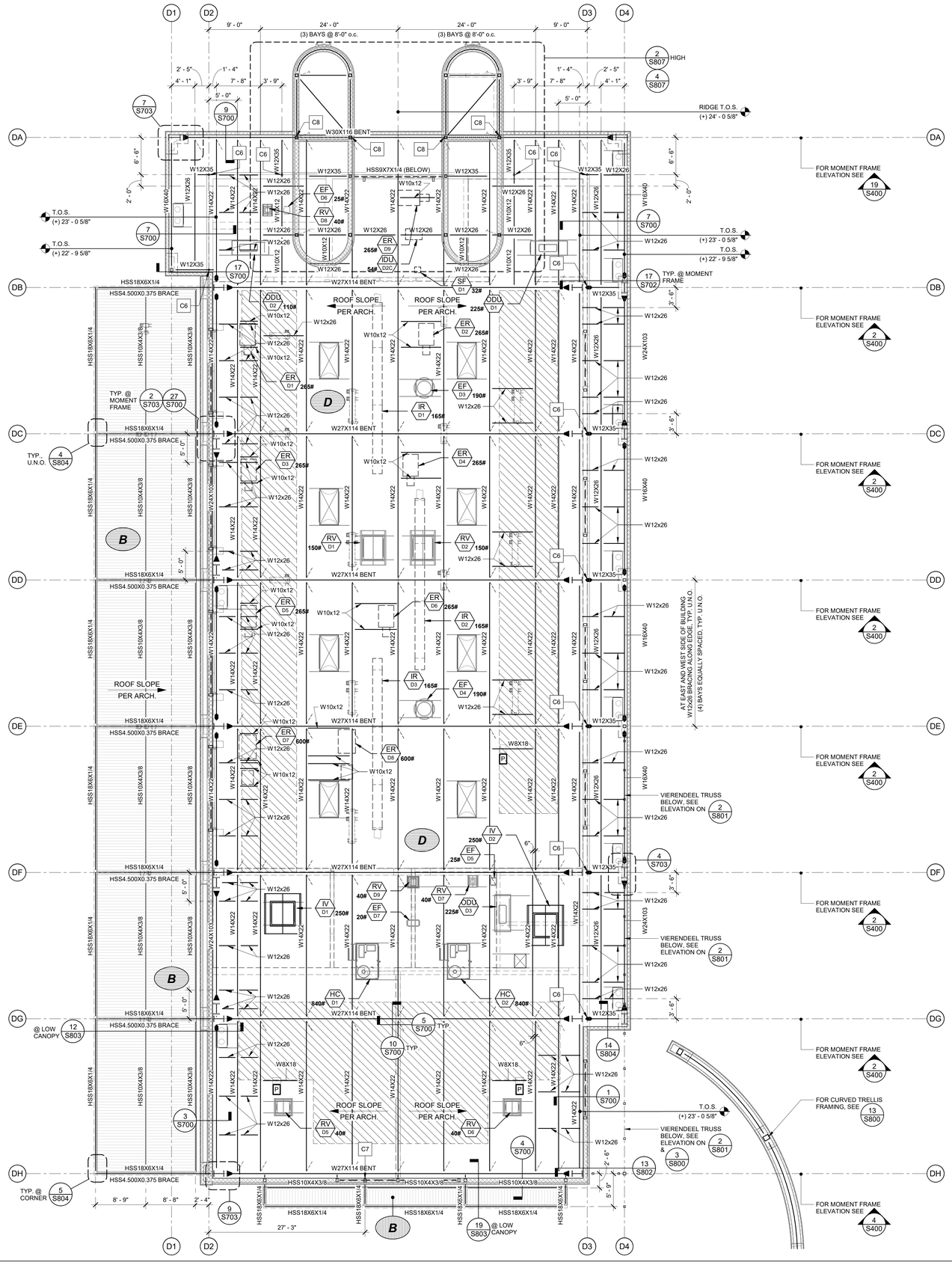
D1
D2
D3
D4
9' - 0"
24' - 0"
(3) BAYS @ 8'-0" o.c.
24' - 0"
(3) BAYS @ 8'-0" o.c.
9' - 0"
2' - 5"
4' - 1"
1' - 4"
7' - 8"
3' - 9"
5' - 0"
2 S807 HIGH
4 S807
RIDGE T.O.S. (+) 24' - 0 5/8"
7 S703
9 S700
C8
W30X116 BENT
C6
W12X35
W12X26
W14X22
W16X40
W16X31
W10X12
W12X10
W12X26
HSS9X7X1/4 (BELOW)
W10x12
EF D6 25#
RV D8 40#
ER D9 265#
IDU D2C 54#
W27X114 BENT
SF D1 32#
ODU D2 110#
ODU D1 225#
ER D2 265#
EF D3 190#
IR D1 165#
ER D1 265#
RV D1 150#
ER D3 265#
ER D4 265#
IR D2 165#
IR D3 165#
EF D4 190#
ER D7 600#
ER D8 600#
IV D2 250#
EF D5 25#
RV D9 40#
RV D7 40#
EF D7 20#
ODU D3 225#
HC D1 840#
HC D2 840#
RV D5 40#
RV D6 40#
W8X18
P
C7
W24X103
W12X35
W16X40
W18X40
W12x26
W10x12
W14X22
6' - 6"
2' - 0"
3' - 6"
5' - 0"
T.O.S. (+) 23' - 0 5/8"
T.O.S. (+) 22' - 9 5/8"
17 S700
17 S702 TYP. @ MOMENT FRAME
FOR MOMENT FRAME ELEVATION SEE 19 S400
FOR MOMENT FRAME ELEVATION SEE 2 S400
FOR CURVED TRELLIS FRAMING, SEE 13 S800
VIERENDEEL TRUSS BELOW, SEE ELEVATION ON 2 S801
AT EAST AND WEST SIDE OF BUILDING W12x26 BRACING ALONG EDGE, TYP. U.N.O. (4) BAYS EQUALLY SPACED, TYP. U.N.O.
HSS18X6X1/4
HSS4.500X0.375 BRACE
HSS18X6X1/4
HSS10X4X3/8
HSS10X4X3/8
HSS10X4X3/8
HSS18X6X1/4

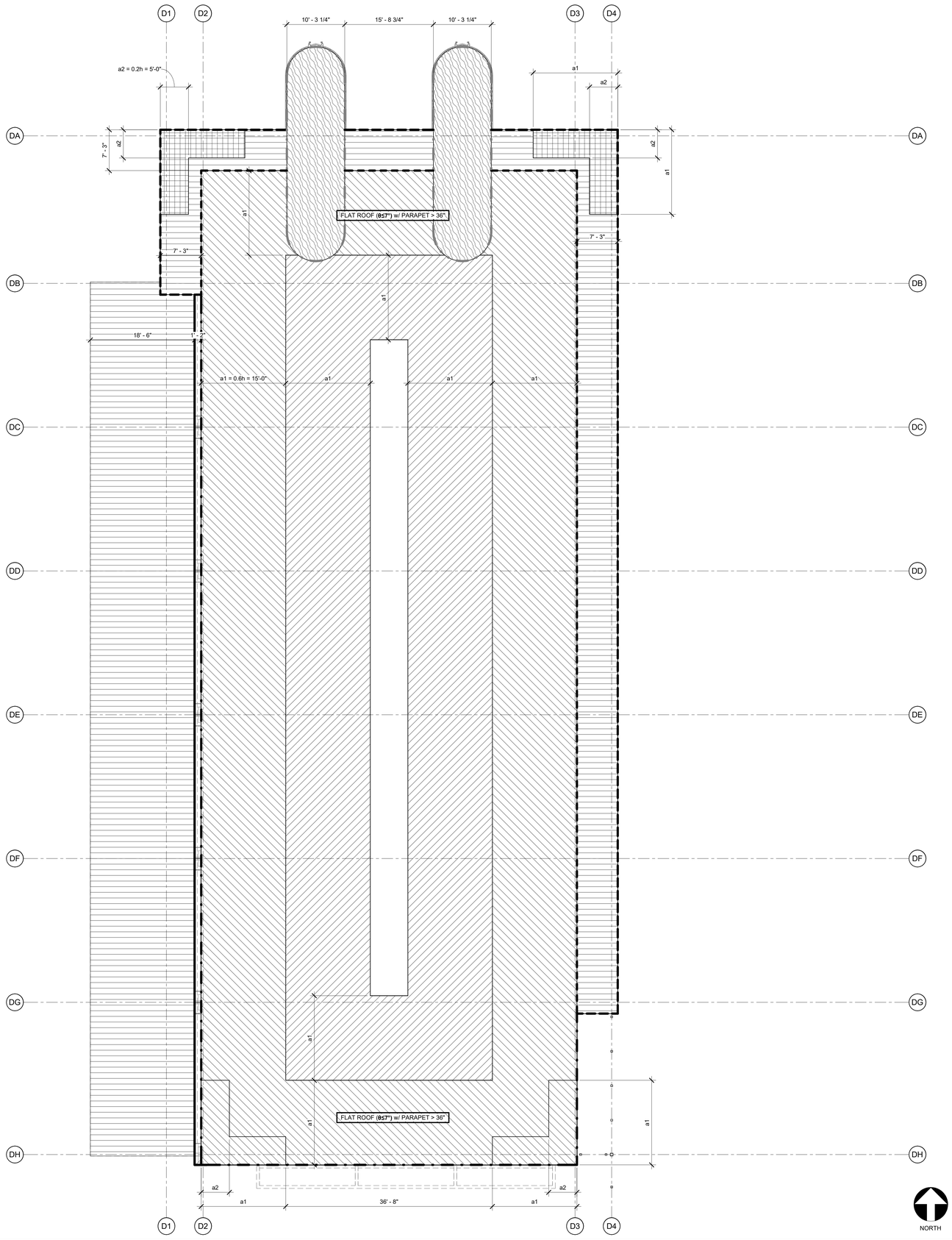

WIND PRESSURE FOR ROOF θ<7° (LRFD)

COMPONENTS & CLADDING

EFFECTIVE WIND AREA	POSITIVE (PSF)	NEGATIVE (PSF)					
	ALL ZONES	ZONE 1' w/o O.H.	ZONE 1 w/o O.H.	ZONE 2 w/o O.H.	ZONE 3 w/o O.H.	ZONE 1' & 1 w/ O.H.	ZONE 2 w/ O.H.	ZONE 3 w/ O.H.
10 SF	16.0	-22.5	-39.2	-51.7	-70.5	-39.2	-51.7	-70.5
20 SF	16.0	-29.8	-36.6	-48.4	-63.9	-38.6	-47.3	-62.8
50 SF	16.0	-25.7	-33.2	-44.0	-55.1	-37.8	-41.4	-52.5
100+ SF	16.0	-22.5	-30.6	-40.7	-48.4	-37.1	-37.0	-44.7

FOOTNOTES:

1. ZONES ARE AS DEFINED BY FIGURE 30.3-2A IN ASCE 7-16
   a. DESIGN MEMBERS PER ASCE 7-16 CHAPTER 30 AND CBC 2019 WITH LOAD COMBINATIONS IN 2019 CBC.
2. PRESSURES INDICATED ARE GROSS AND HAVE NOT BEEN INCREASED/REDUCED DUE TO LOAD COMBINATIONS.
3. VALUES DO NOT INCLUDE THE EFFECT OF DEAD LOAD ON FRAMING.
4. VALUES MAY BE INTERPOLATED.
   a. THE VALUE OF 'a1' = "0.6h" = 15'-0"
   b. THE VALUE OF 'a2' = "0.2h" = 5'-0"

ZONE KEY

ZONE PATTERN	ZONE NAME
	3 w/ OVERHANG
	2 w/ OVERHANG
	1' & 1 w/ OVERHANG
	3 w/o OVERHANG
	2 w/o OVERHANG
	1 w/o OVERHANG
	1' w/o OVERHANG

LEGEND

- INDICATES BUILDING WALL BELOW
- INDICATES BUILDING OVERHANG
- INDICATES BUILDING PARAPET
- INDICATES BUILDING WALL ABOVE

DIR. →

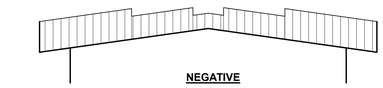

NEGATIVE
(APPLY IN BOTH DIRECTIONS)

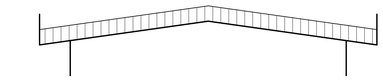

POSITIVE

DIR. →

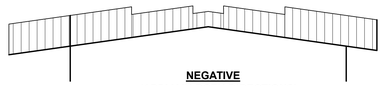

NEGATIVE
(APPLY IN BOTH DIRECTIONS)

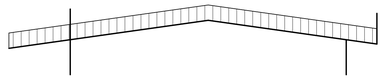

POSITIVE

WIND PRESSURE FOR MOHAWK ROOF θ<7° (LRFD)

COMPONENTS & CLADDING

EFFECTIVE WIND AREA	POSITIVE (PSF)	NEGATIVE (PSF)
	ALL ZONES	ZONE 2 w/o O.H.
10 SF	16.0	-56.3
20 SF	16.0	-52.7
50 SF	16.0	-47.9
100+ SF	16.0	-44.3

FOOTNOTES:

1. ZONES ARE AS DEFINED BY FIGURE 30.3-2A IN ASCE 7-16
   a. DESIGN MEMBERS PER ASCE 7-16 CHAPTER 30 AND CBC 2019 WITH LOAD COMBINATIONS IN 2019 CBC.
2. PRESSURES INDICATED ARE GROSS AND HAVE NOT BEEN INCREASED/REDUCED DUE TO LOAD COMBINATIONS.
3. VALUES DO NOT INCLUDE THE EFFECT OF DEAD LOAD ON FRAMING.

ZONE KEY

ZONE PATTERN	ZONE NAME
	2 w/o OVERHANG

DIR. →

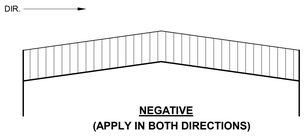

NEGATIVE
(APPLY IN BOTH DIRECTIONS)

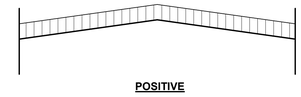

POSITIVE

NOTES, SCHEDULE & LEGEND | 4

KEYPLAN

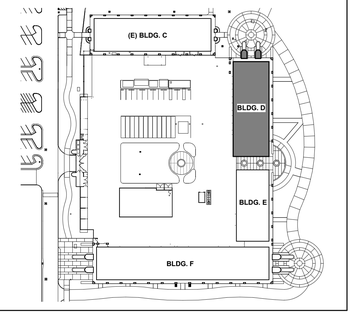

ROOF UPLIFT PRESSURE MAP - BUILDING D | 1/8" = 1'-0" | 15

FOR BID ONLY

Teter, LLP expressly reserves its common law copyright and other property rights in these plans. This document, the ideas and designs incorporated herein, as an instrument of professional service, is not to be used in whole or in part, for any other project without prior written authorization.

MARK	DATE	DESCRIPTION
	11/1/22	DSA BACKCHECK

REGISTERED PROFESSIONAL ENGINEER E. S. BAILEY No. 55609 STRUCTURAL STATE OF CALIFORNIA

TETER, LLP
FRESNO HEADQUARTERS
VISALIA | BAKERSFIELD | MODESTO | SAN LUIS OBISPO
ARCHITECTS ENGINEERS CONNECTED

TETER

TULARE CAMPUS CTE
COLLEGE OF THE SEQUOIAS
4999 E. BARDSLEY AVE.
TULARE, CA

DRAWING TITLE
ROOF UPLIFT PRESSURE MAP - BUILDING D

PROJECT NO.
20-12032

DRAWING
S301

\\tet-file1\Users\luis.valtierra\Documents\12032-S-COS Tulare CTE_luis.valtierra.rvt

PLOT DATE: 10/31/2022 3:26:02 PM

\\tet-file1\Users\luis.valtierra\Documents\12032-S-COS Tulare CTE_luis.valtierra.rvt

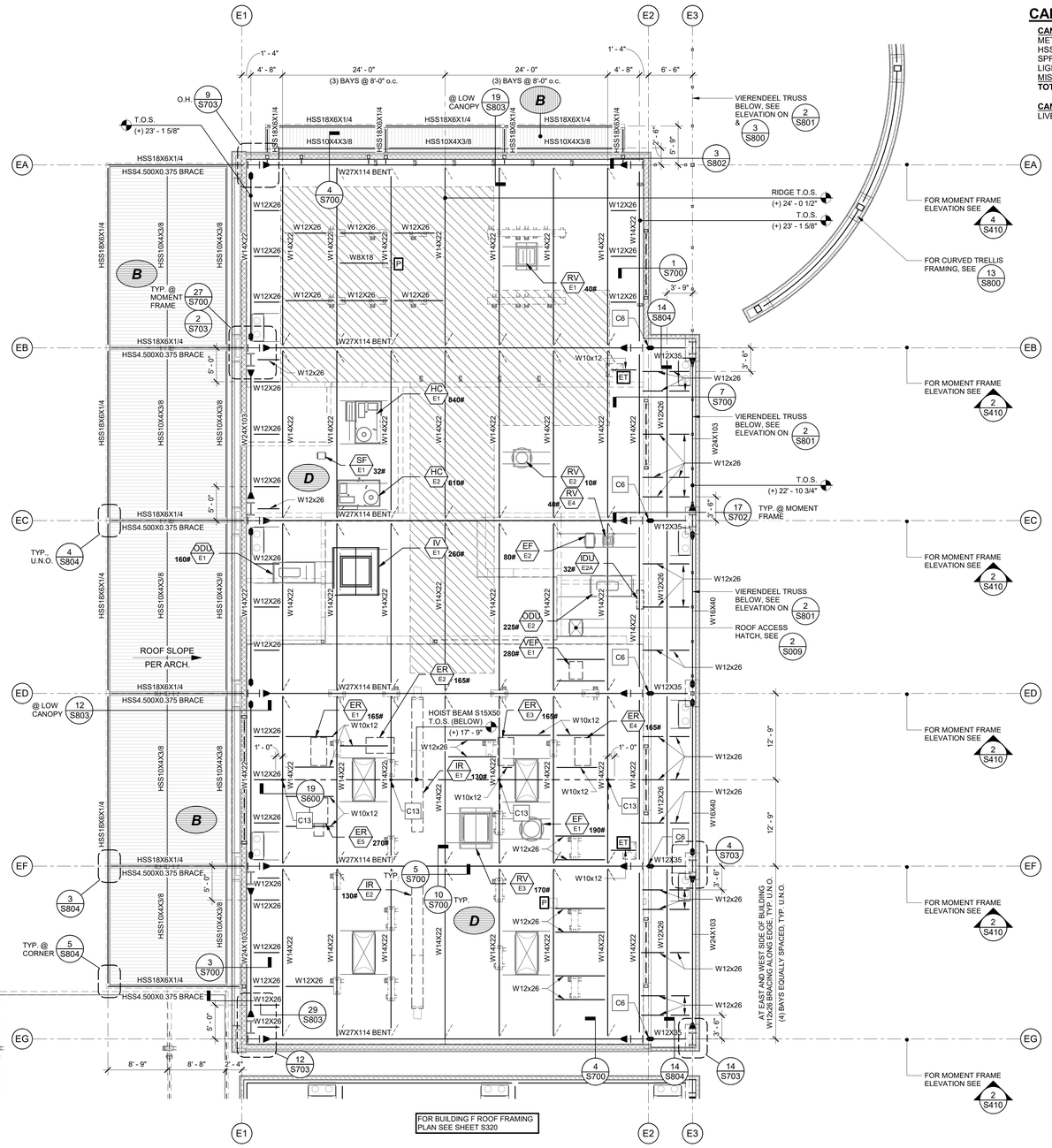
E1
E2
E3
EA
EB
EC
ED
EF
EG
1' - 4"
4' - 8"
24' - 0"
(3) BAYS @ 8'-0" o.c.
6' - 6"
O.H. 9 S703
T.O.S. (+) 23' - 1 5/8"
@ LOW CANOPY 19 S803
B
HSS18X6X1/4
HSS10X4X3/8
HSS4.500X0.375 BRACE
W27X114 BENT
W12X26
W14X22
W8X18
W10x12
W12x26
W12X35
W24X103
W16X40
W12x26
W10x12
W14X22
W12X26
W24X103
W16X40
W12x26
W12X35
W12x26
W12X26
W14X22
W12X26
W24X103

\\tet-file1\Users\luis.valtierra\Documents\12032-S-COS Tulare CTE_luis.valtierra.rvt

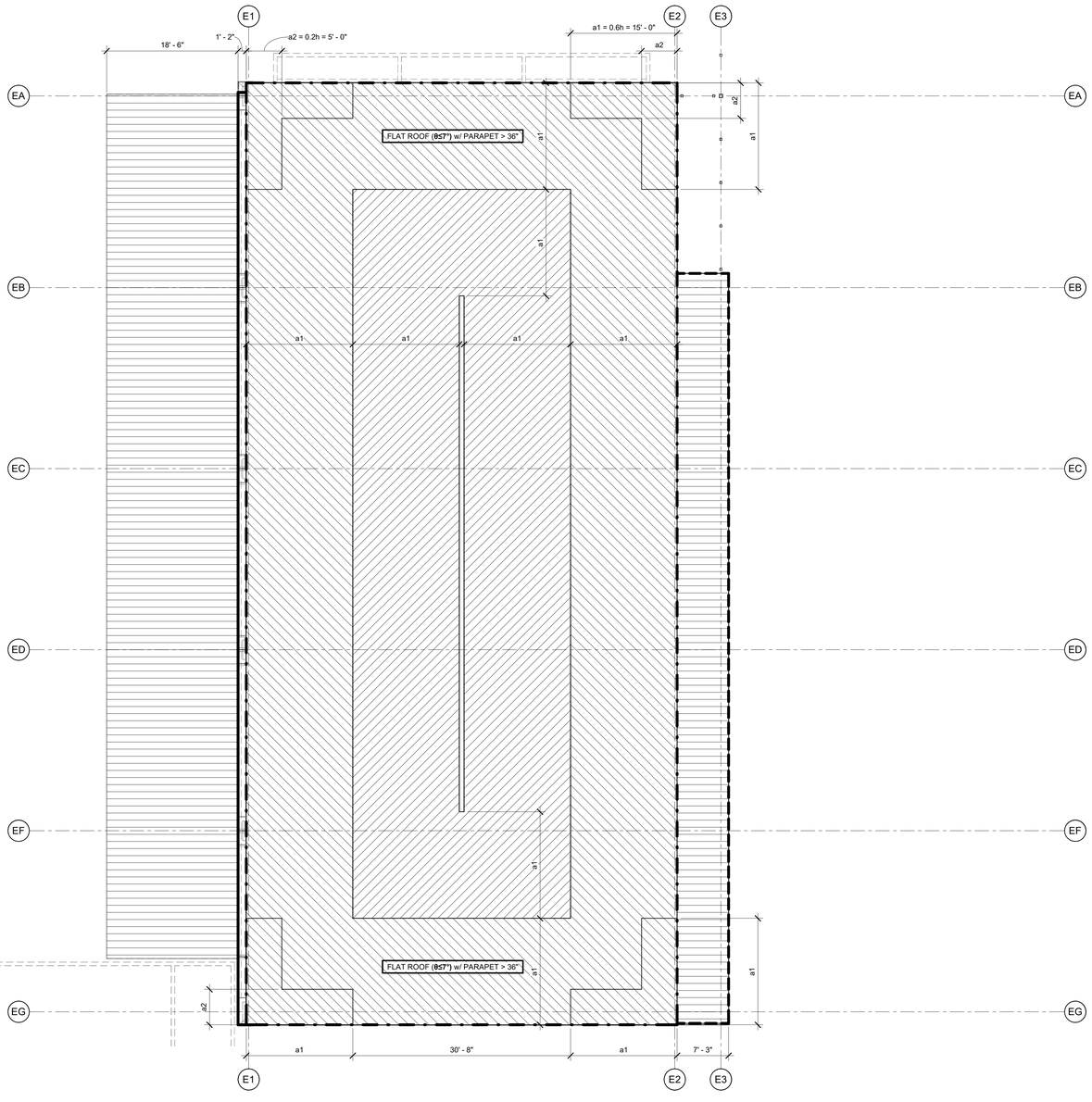

ROOF UPLIFT MAP NOTES

1. FOR ROOF UPLIFT NOTES AND PRESSURES, SEE 5 / S301

NOTES, SCHEDULE & LEGEND | 4

KEYPLAN

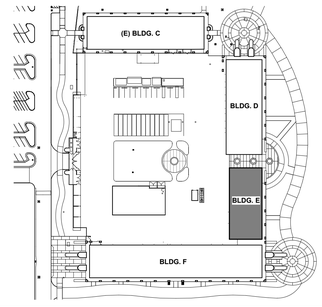

NORTH

ROOF UPLIFT PRESSURE MAP - BUILDING E | 1/8" = 1'-0" | 15

PLOT DATE: 10/31/2022 3:26:15 PM

FOR BID ONLY

Teter, LLP expressly reserves its common law copyright and other property rights in these plans. This document, the ideas and designs incorporated herein, as an instrument of professional service, is not to be used in whole or part, for any other project without prior written authorization.

MARK	DATE	DESCRIPTION
	11/1/22	DSA BACKCHECK

TETER, LLP
FRESNO HEADQUARTERS
VISALIA | BAKERSFIELD | MODESTO | SAN LUIS OBISPO
ARCHITECTS ENGINEERS CONNECTED

TULARE CAMPUS CTE
COLLEGE OF THE SEQUOIAS
4999 E. BARDSLEY AVE.
TULARE, CA

DRAWING TITLE
ROOF UPLIFT PRESSURE MAP - BUILDING E

PROJECT NO.
20-12032

DRAWING
S311

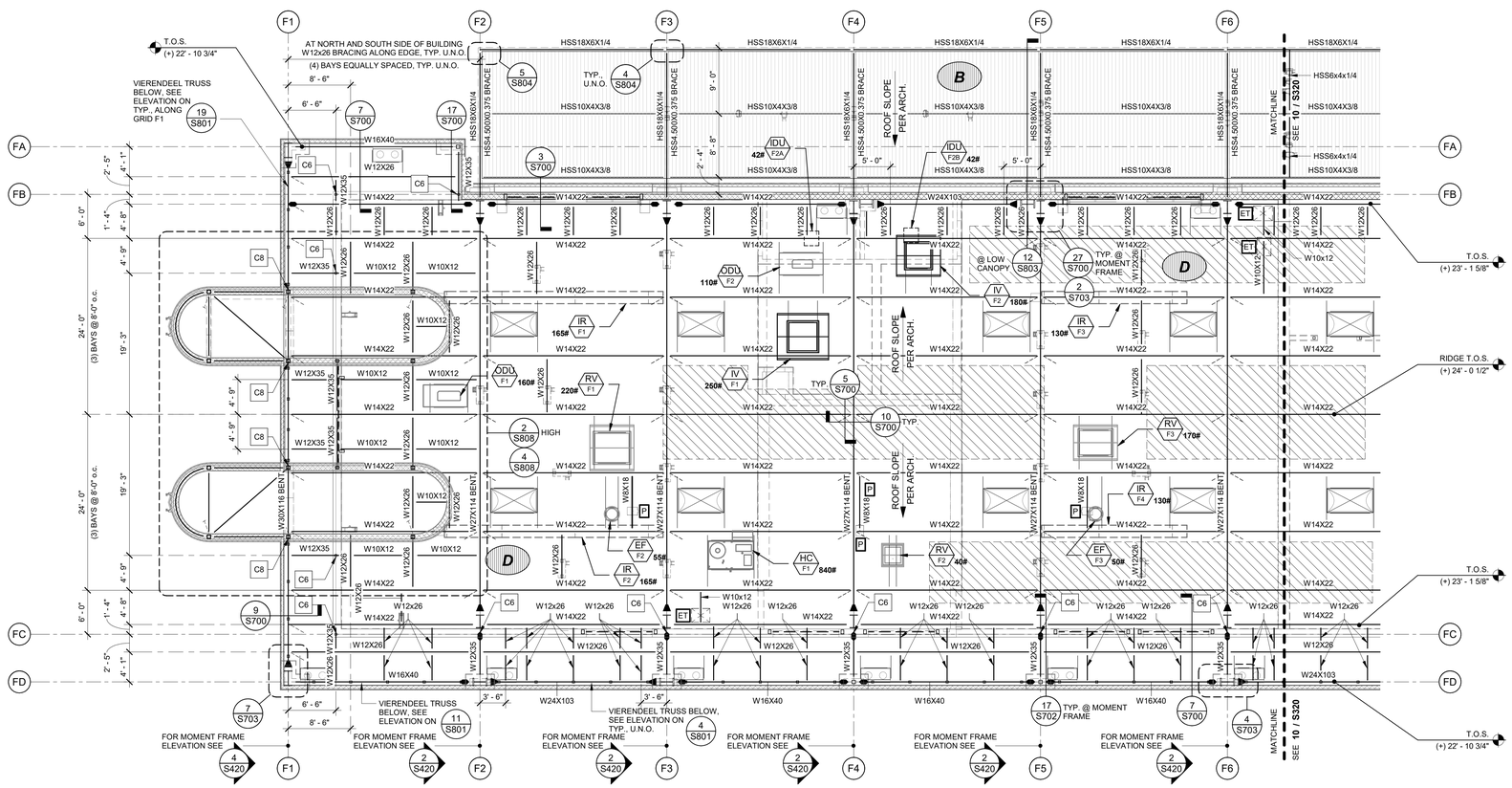

ROOF FRAMING PLAN - BUILDING F

1/8" = 1'-0" | 8

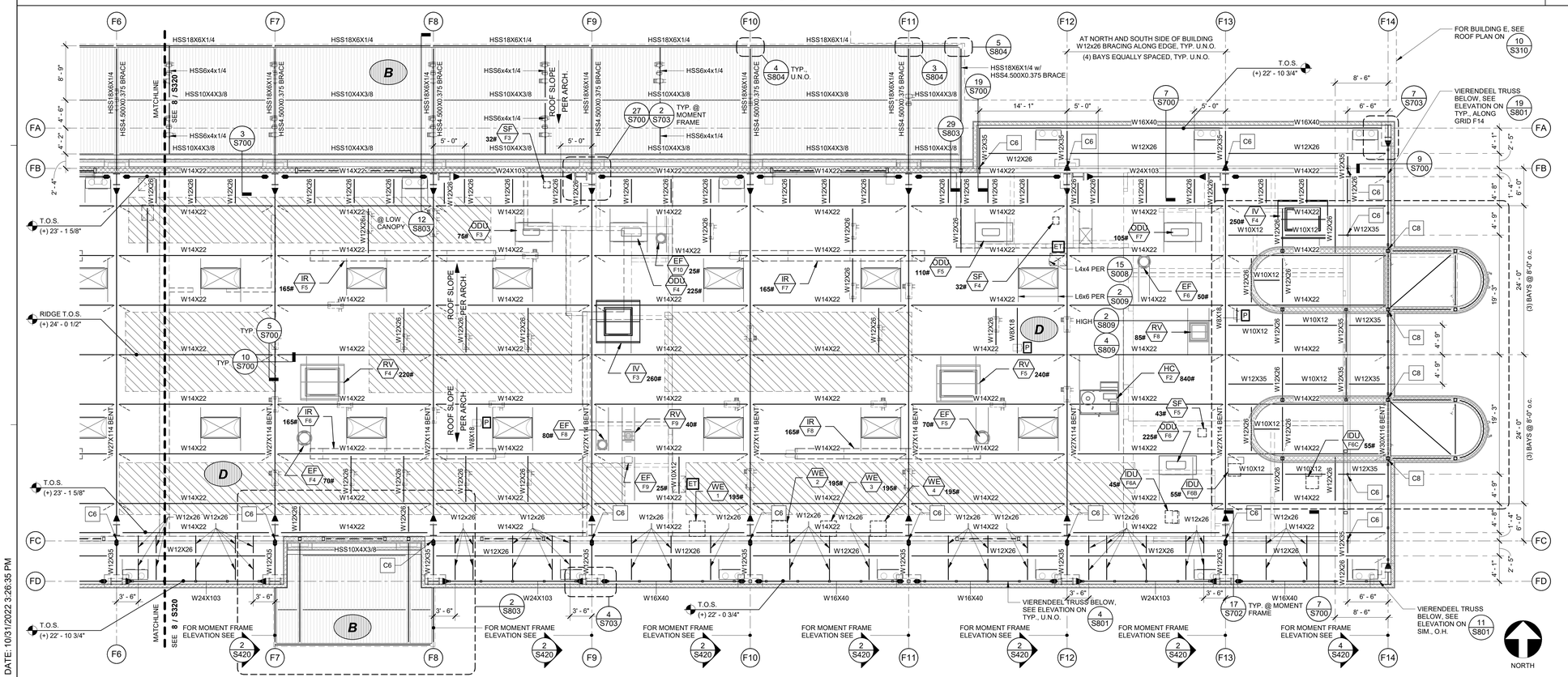

ROOF FRAMING PLAN - BUILDING F

1/8" = 1'-0" | 10

ROOF FRAMING NOTES

1. THE TYPICAL DETAILS SHOWN ON THE S0XX SERIES SHEETS SHALL APPLY IN ALL CASES, UNLESS SPECIFICALLY SHOWN OTHERWISE. WHERE NO DETAIL IS SHOWN, CONSTRUCTION SHALL BE AS SHOWN FOR SIMILAR WORK. SEE SHEET SPECIFICATIONS AND TYPICAL DETAILS FOR ADDITIONAL INFORMATION.
2. UNCLEAR, CONFLICTING AND/OR MISSING INFORMATION SHALL BE BROUGHT TO THE ENGINEER'S ATTENTION PRIOR TO CONSTRUCTION.
3. ALL DIMENSIONS ARE TO FACE OF WALL STUD OR CENTER OF COLUMN, U.N.O. COORDINATE ALL DIMENSIONS WITH ARCHITECTURAL DRAWINGS.
4. SEE FOUNDATION PLAN FOR COLUMNS SHOWN BUT NOT NOTED.
5. ALL ELEVATIONS ARE ESTABLISHED FROM AND RELATIVE TO FIRST FLOOR FINISHED SLAB (0'-0" DATUM), U.N.O. FOR ACTUAL ELEVATIONS, SEE CIVIL DRAWINGS.
6. STEEL MEMBERS ARE EQUALLY SPACED BETWEEN DIMENSION POINTS, U.N.O., AND SHALL FRAME TO CENTERLINE OF COLUMNS OR WORK POINT.
7. SEE ARCHITECTURAL DRAWINGS FOR WALL STUD SIZES AND SPACING, U.N.O.
8. SEE DETAILS FOR TYPICAL DECK TO BEAM CONNECTION CONDITIONS AT ALL STRUCTURAL MEMBERS. ENSURE FLUTE OF METAL DECK LANDS ON BEAM/JOIST. IF DECK FLUTE DOES NOT FULLY LAND ON MEMBERS, SEE DETAIL 16 / S006.
9. DO NOT SUSPEND PIPING, MAIN LINE CONDUITS OR OTHER UTILITIES FROM METAL DECK ALONE. SUSPENDED T-BAR CEILING WITH LIGHT FIXTURES AND SOFFIT FRAMING ARE ACCEPTABLE.
10. ALL MECHANICAL UNITS SHALL BE VERIFIED WITH MECHANICAL CONTRACTOR PRIOR TO CONSTRUCTION. SEE ARCHITECTURAL DRAWINGS. FOR FRAMING AT OPENINGS IN DECK, SEE DETAIL 2 / S006.
11. SEE ARCHITECTURAL PLANS FOR PLUMBING PENETRATIONS.
12. FOR TYPICAL ROOF DRAIN SUPPORT, SEE DETAIL 3 / S009.
13. FOR STEEL BEAM-TO-BEAM AND BEAM-TO-COLUMN CONNECTIONS, SEE DETAILS 19 / S005 FOR WF COLUMNS & 5 / S006 FOR HSS COLUMNS.
14. FOR ROOF DESIGN LOADS, SEE SHEET S300. AT LARGE WALL OPENING JAMBS, SEE DETAIL 1 / S702.

LEGEND

- # — GRID BUBBLE AND NUMBER. SEE ARCHITECTURAL DRAWING PACKAGE FOR DETAILED DIMENSIONS OF ALL GRIDS SHOWN.
- 1 / S400 — SECTION/ ELEVATION MARK. SEE REFERENCING DETAIL NUMBER AND SHEET NUMBER FOR ADDITIONAL INFORMATION.
- 1 / S700 — DETAIL MARK. SEE REFERENCING DETAIL NUMBER AND SHEET NUMBER FOR ADDITIONAL INFORMATION.
- T.O.S. (+) 0'-0" — ELEVATION MARK. T.O.W. = TOP OF WALL; T.O.F. = TOP OF FOOTING; T.O.S. = TOP OF STEEL
- CX — COLUMN TAG. SEE COLUMN SCHEDULE ON FOUNDATION PLAN FOR ADDITIONAL INFORMATION. TYPE 'C6' TAG INDICATES MECHANICAL SCREEN POST PER 2 / S804
- INDICATES METAL STUD WALLS ABOVE ROOF FRAMING LEVEL. FOR STUD SIZES, SPACING AND ARCHITECTURAL WALL TYPES, SEE ARCHITECTURAL DRAWINGS. FOR WALL FRAMING SEE DETAIL 4 / S010
- INDICATES METAL STUD WALL BELOW ROOF LEVEL.
- W16x26 (c=1") — FRAME BEAM ID; c = CAMBER
- D — STEEL DECK. FOR ADDITIONAL INFORMATION SEE 2 / S006
- IDU 1 XXXX# — INDICATES MECHANICAL UNIT AND WEIGHT. FOR CURB SUPPORT, UNIT PLATFORMS AND ATTACHMENT DETAILS SEE MECHANICAL DRAWINGS. FOR TYPICAL FRAMING AT OPENINGS SEE 6 / S009
- INDICATES SOLATUBE, SEE ARCHITECTURAL DRAWINGS. FOR TYPICAL FRAMING AT OPENING SEE 2 / S009
- INDICATES ROOF DRAIN, SEE ARCHITECTURAL DRAWINGS. FOR TYPICAL FRAMING AT OPENING SEE 3 / S009
- INDICATES WALL BELOW FLOOR FRAMING
- INDICATES HEADER BELOW, SEE DETAIL 4 / S010
- INDICATES ROOF DECK OPENING, SEE DETAIL 2 / S009
- INDICATES MOMENT CONNECTION. SEE DETAIL 5 / S007 FOR ADDITIONAL INFORMATION
- INDICATES CONNECTION TO BE MADE WITH ASTM A490 BOLTS W/ CLASS B FAYING SURFACE. FOR SIZE AND QUANTITY OF BOLTS SEE DETAIL 20 / S006
- INDICATES MOMENT FRAME BOTTOM FLANGE BRACING PER 15 / S700
- INDICATES SOLAR READY AREA. SEE ARCHITECTURAL FOR ADDITIONAL INFORMATION.
- INDICATES BRACE FRAME. BRACES EXIST AT ROOF LEVEL FOR TOWER ELEMENTS. SEE BRACE FRAME ELEVATIONS ON SHEETS S80X FOR ADDITIONAL INFORMATION
- P — INDICATES PROJECTOR BELOW. FOR LOCATION AND SUPPORT DETAILS, SEE ELECTRICAL DRAWINGS
- HR 2 — INDICATES HOSE REEL BELOW. FOR LOCATION AND SUPPORT DETAILS, SEE ARCHITECTURAL DRAWINGS
- ET 1 — INDICATES ELECTRICAL TRANSFORMER BELOW. FOR LOCATION AND SUPPORT DETAILS, SEE ELECTRICAL DRAWINGS

NOTES & LEGEND | 4

KEYPLAN

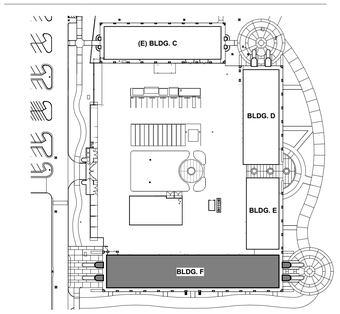

FOR BID ONLY

MARK	DATE	DESCRIPTION
	11/1/22	DSA BACKCHECK

TETER, LLP
ARCHITECTS ENGINEERS CONNECTED
FRESNO HEADQUARTERS
VISALIA | BAKERSFIELD | MODESTO | SAN LUIS OBISPO

TULARE CAMPUS CTE
COLLEGE OF THE SEQUOIAS
4999 E. BARDSLEY AVE.
TULARE, CA

PROJECT NO. 20-12032

DRAWING TITLE: ROOF FRAMING PLAN - BUILDING F

DRAWING S320

PLOT DATE: 10/31/2022 3:26:35 PM

\\tet-file1\Users\luis.valtierra\Documents\12032-S-COS Tulare CTE_luis.valtierra.rvt

\\tet-file1\Users\luis.valtierra\Documents\12032-S-COS Tulare CTE_luis.valtierra.rvt

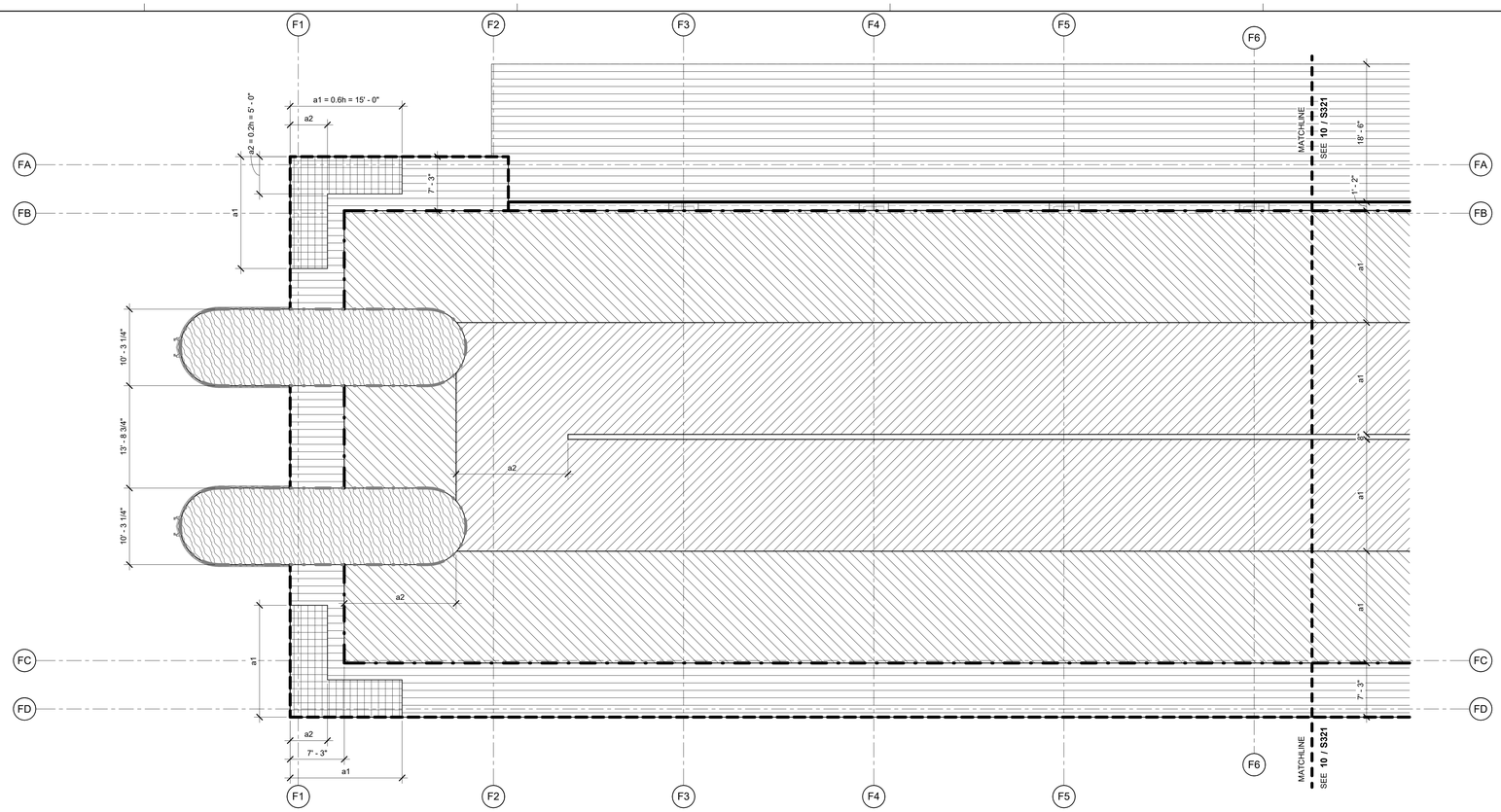

ROOF UPLIFT PRESSURE MAP - BUILDING F

1/8" = 1'-0" | 8

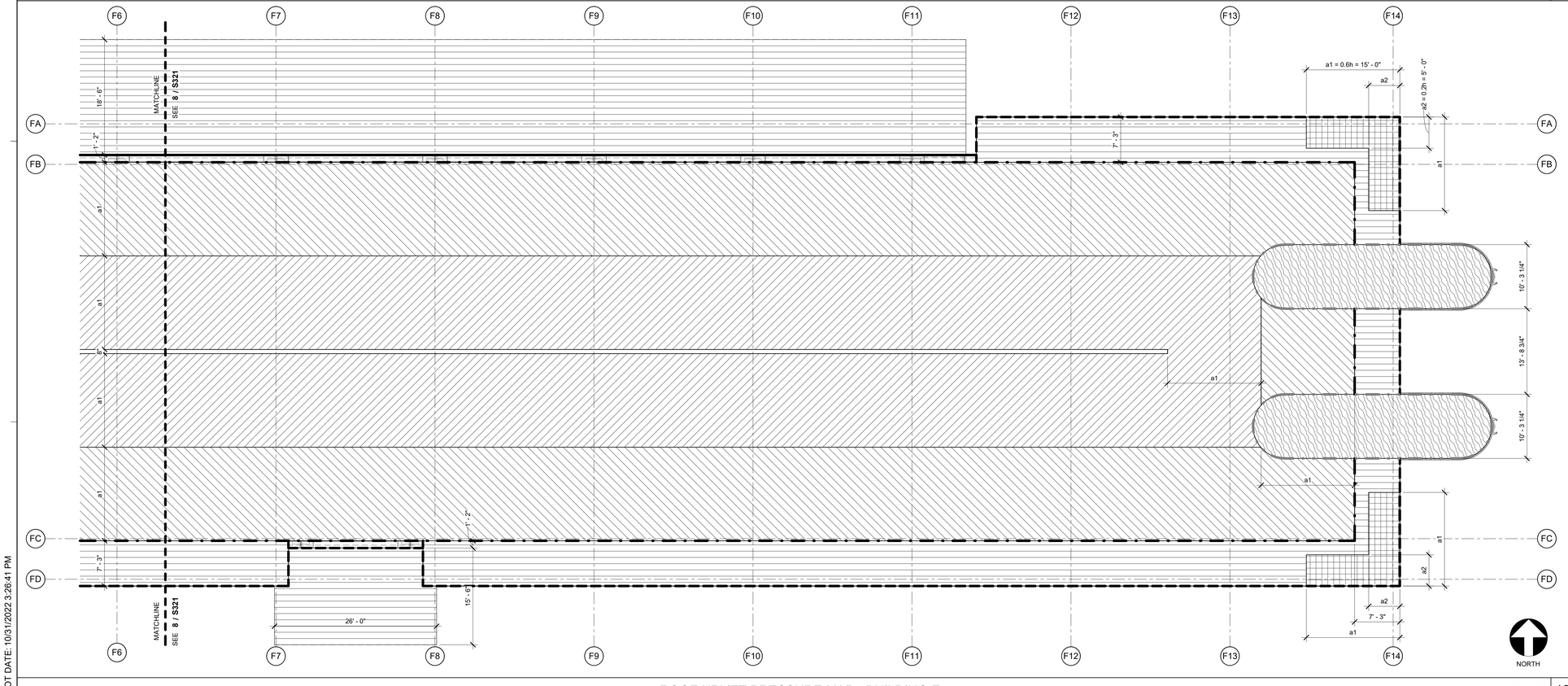

ROOF UPLIFT PRESSURE MAP - BUILDING F

1/8" = 1'-0" | 10

ROOF UPLIFT MAP NOTES

1. FOR ROOF UPLIFT NOTES AND PRESSURES, SEE 5 / S301

NOTES & SCHEDULES | 4

KEYPLAN

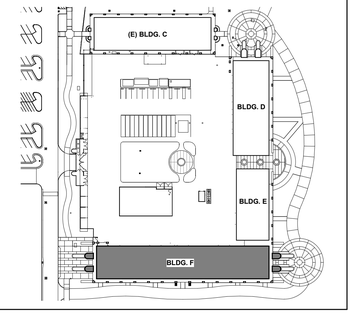

FOR BID ONLY

Teter, LLP expressly reserves its common law copyright and other property rights in these plans. This document, the ideas and designs incorporated herein, as an instrument of professional service, is not to be used in whole or in part, for any other project without prior written authorization.

MARK	DATE	DESCRIPTION
	11/1/22	DSA BACKCHECK

REGISTERED PROFESSIONAL ENGINEER S. BAILEY No. 55659 STRUCTURAL STATE OF CALIFORNIA

TETER, LLP
ARCHITECTS ENGINEERS CONNECTED
FRESNO HEADQUARTERS
VISALIA | BAKERSFIELD | MODESTO | SAN LUIS OBISPO

TULARE CAMPUS CTE
COLLEGE OF THE SEQUOIAS
4999 E. BARDSLEY AVE.
TULARE, CA

DRAWING TITLE: ROOF UPLIFT PRESSURE MAP - BUILDING F

PROJECT NO. 20-12032

DRAWING S321

PLOT DATE: 10/31/2022 3:26:41 PM

\\tet-file1\Users\luis.valtierra\Documents\12032-S-COS Tulare CTE_luis.valtierra.rvt

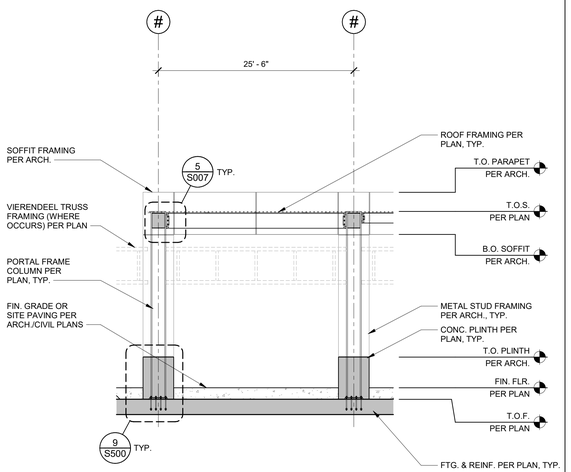

PORTAL FRAME ELEVATION AT LINE D4 (LOOKING WEST) 1/8" = 1'-0" | 22

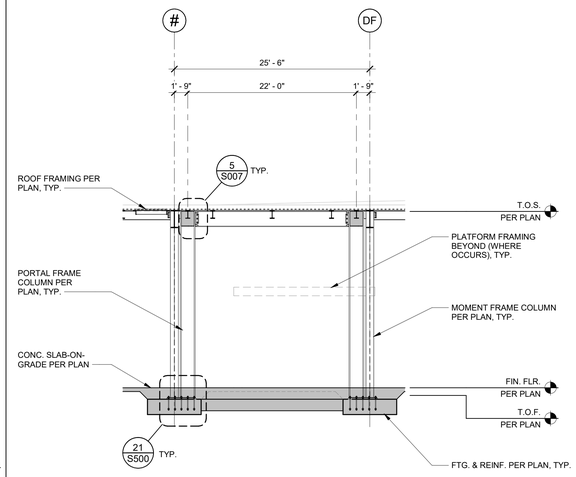

PORTAL FRAME ELEVATION AT LINE D2 (LOOKING WEST) 1/8" = 1'-0" | 17

NOTES:
FOR MOMENT FRAME ELEVATION NOTES SEE 5 S400

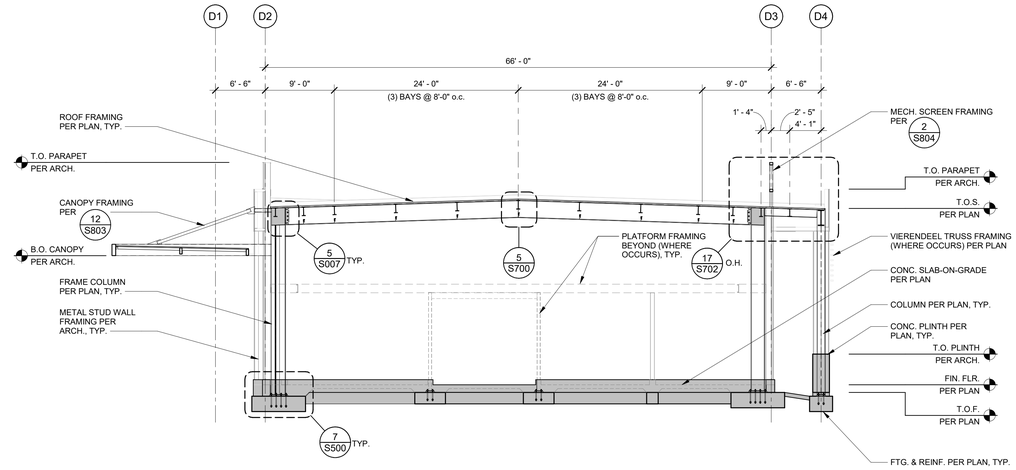

MOMENT FRAME ELEVATION AT GRIDLINE (LOOKING NORTH) 1/8" = 1'-0" | 2

NOTES:
FOR MOMENT FRAME ELEVATION NOTES SEE 5 S400

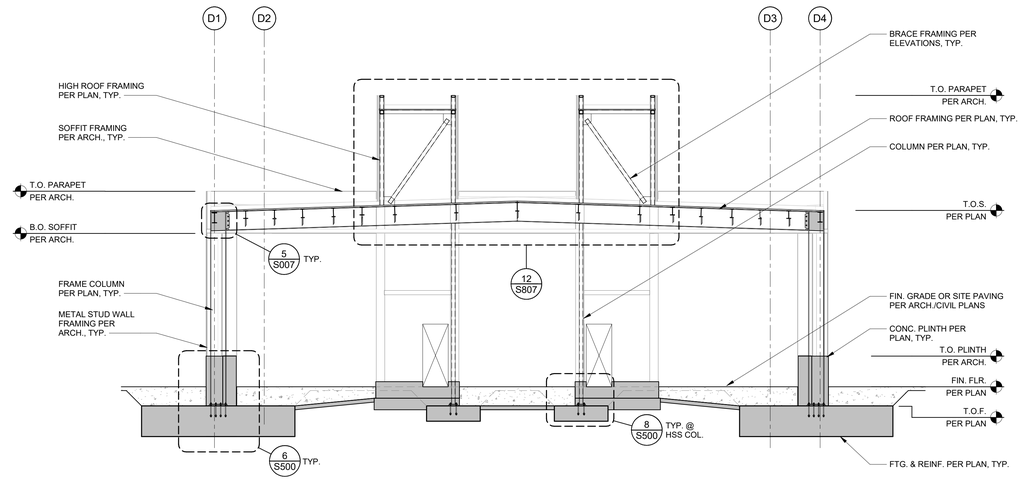

MOMENT FRAME ELEVATION AT LINE DA (LOOKING NORTH) 1/8" = 1'-0" | 19

NOTES:
FOR MOMENT FRAME ELEVATION NOTES SEE 5 S400

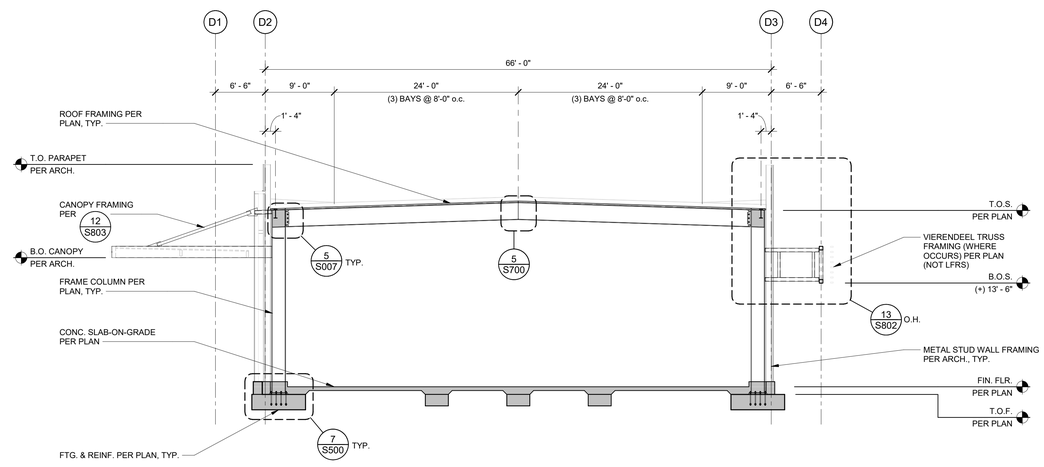

MOMENT FRAME ELEVATION AT LINE DH (LOOKING NORTH) 1/8" = 1'-0" | 4

MOMENT FRAME NOTES

1. SEE PLANS FOR BEAM AND COLUMN SIZES. ALL COLUMNS ARE CONTINUOUS, UNLESS NOTED OTHERWISE.
2. REFER TO FRAMING PLANS FOR T.O.S. UNLESS NOTED OTHERWISE.
3. ALL MEMBERS INDICATED IN THE MOMENT FRAME ELEVATIONS ARE PART OF THE LATERAL FORCE RESISTING SYSTEM (LFRS).
4. ALL WELDS ON MOMENT FRAMES SHALL MEET LATERAL FRAME (DEMAND CRITICAL) REQUIREMENTS, SEE GENERAL NOTES.
5. ALL WELDS TO BE PLACED PRIOR TO CONCRETE POURS.
6. FOR REQUIREMENTS AND SPECIAL INSPECTION OF WELDING SEE NOTE #10 THE STRUCTURAL STEEL NOTES, SPECIAL INSPECTION SECTION ON SHEET S001.
7. ALL BEAM-TO-COLUMN MOMENT CONNECTIONS SHALL BE PER 5 S007, U.N.O.
8. ALL TYPICAL BEAM-TO-BEAM AND BEAM-TO-COLUMN CONNECTIONS SHALL BE PER 5 S006, U.N.O.
9. PERPENDICULAR STUD WALL FRAMING PER PLAN (SHOWN LIGHT GRAY FOR CLARITY). FOR TYPICAL WALL FRAMING SEE 4 S010

MOMENT FRAME NOTES N.T.S. | 5

PLOT DATE: 10/31/2022 3:26:46 PM

FOR BID ONLY

Teter, LLP expressly reserves its common law copyright and other property rights in these plans. This document, the ideas and designs incorporated herein, as an instrument of professional service, is not to be used in whole or part, for any other project without prior written authorization.

MARK	DATE	DESCRIPTION
	11/1/22	DSA BACKCHECK

REGISTERED PROFESSIONAL ENGINEER S. BAILEY No. 55691 STRUCTURAL STATE OF CALIFORNIA

TETER, LLP
FRESNO HEADQUARTERS
VISALIA | BAKERSFIELD | MODESTO | SAN LUIS OBISPO
ARCHITECTS ENGINEERS CONNECTED

TULARE CAMPUS CTE
COLLEGE OF THE SEQUOIAS
4999 E. BARDSLEY AVE.
TULARE, CA

DRAWING TITLE
MOMENT FRAME ELEVATIONS

PROJECT NO.
20-12032

DRAWING
S400

\\tet-file1\Users\luis.valtierra\Documents\12032-S-COS Tulare CTE_luis.valtierra.rvt
11" x17" 1" 1" 1"

WALL FRAMING ELEVATION NOTES

1. THE INTENT OF THE WALL ELEVATION IS TO INDICATE DETAILS AND/OR MEMBER SIZES THAT DO NOT APPEAR ON PLAN AND TO REPRESENT THE EXTENT OF THE SHEAR WALL SHEATHING (WHERE OCCURS PER PLAN).
2. FOR STRUCTURAL STEEL FRAME SIZES AND DETAILS NOT SHOWN, SEE FOUNDATION AND FRAMING PLANS.
3. STEEL FRAMING BEYOND PER PLAN (SHOWN DASHED FOR CLARITY). FOR ADDITIONAL INFORMATION, SEE MOMENT FRAME ELEVATIONS ON SHEETS S400 THRU S4XX.
4. FOR TYPICAL STUD WALL FRAMING REFER TO ARCHITECTURAL DRAWINGS AND TYPICAL DETAIL 1/S810
5. HSS COLUMNS ARE FULL HEIGHT TO THE HIGHEST POINT AS APPLICABLE (T.O. PARAPET, T.O. WALL TRACK, ETC.) UNLESS INTERRUPTED BY INTERMEDIATE MEMBER, AS DETAILED.
6. AT HSS FRAMED OPENINGS, ALLOW 3/8" VERTICAL DEFLECTION AT HEAD.
7. SEE ARCHITECTURAL DRAWINGS FOR WALL OPENING LOCATIONS AND DIMENSIONS.
8. LATERAL MOVEMENT VALUES (STRENGTH LEVEL) FOR CURTAIN WALL/STOREFRONT MFR;
   - A. BUILDING D
     DEFLECTION ALONG GRID (STORY DRIFT PER ASCE 7-16 12.8.6):
     a. DA - 1.113" SEISMIC, 1.232" WIND
     b. DB TO D14 - 3.33" SEISMIC, 2.003" WIND
     c. D2 & D4 - 3.92" SEISMIC, 0.78" WIND
   - B. BUILDING E
     DEFLECTION ALONG GRID (STORY DRIFT PER ASCE 7-16 12.8.6):
     a. EA-EG - 3.21" SEISMIC, 2.016" WIND
     b. E1 & E3 - 2.358" SEISMIC, 0.555" WIND
   - C. BUILDING F
     DEFLECTION ALONG GRID (STORY DRIFT PER ASCE 7-16 12.8.6):
     a. F1 & F14 - 1.082" SEISMIC, 1.223" WIND
     b. F2 TO F13 - 3.208" SEISMIC, 2.016" WIND
     c. FB & FD - 4.202" SEISMIC, 0.397" WIND

WALL FRAMING ELEVATION NOTES N.T.S. 27

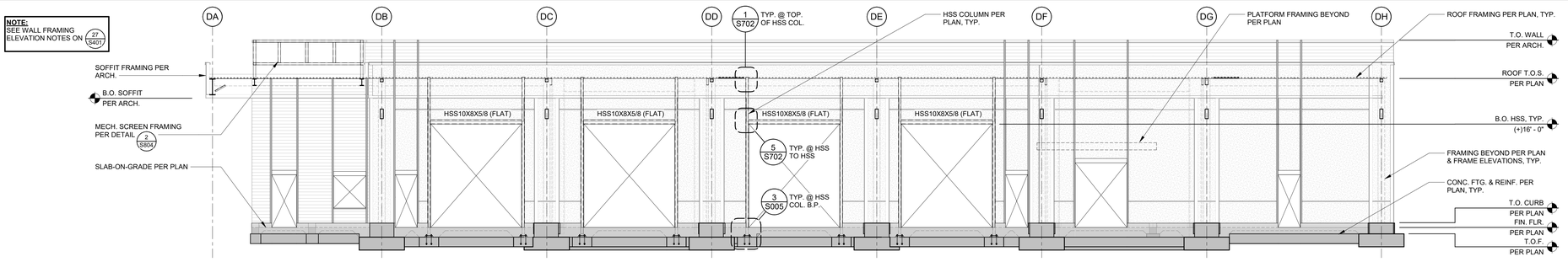

EXTERIOR WALL FRAMING ELEVATION AT LINE D2 (LOOKING EAST) 1/8" = 1'-0" 1

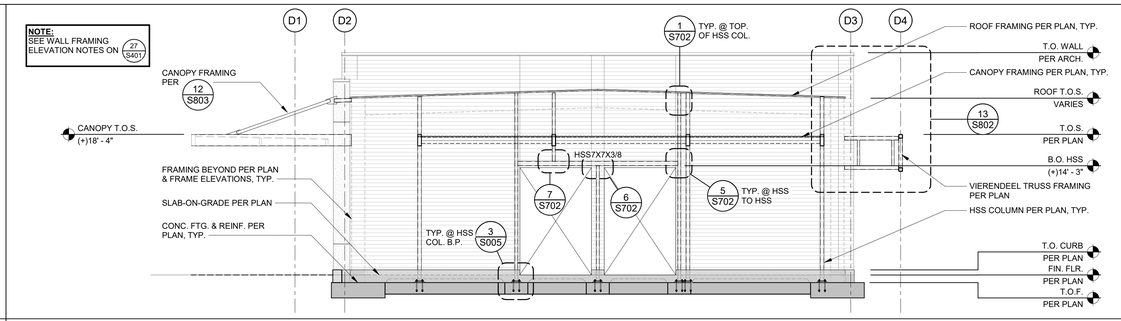

EXTERIOR WALL FRAMING ELEVATION NEAR LINE DH (LOOKING NORTH) 1/8" = 1'-0" 2

EXTERIOR WALL FRAMING ELEVATION AT LINE D3 (LOOKING WEST) 1/8" = 1'-0" 3

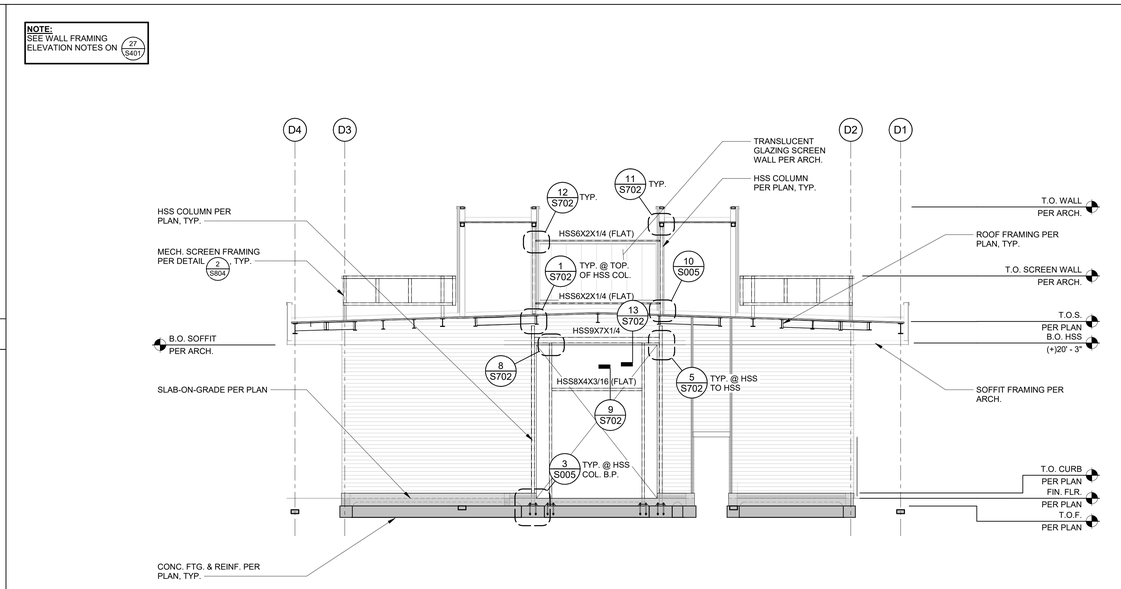

EXTERIOR WALL FRAMING ELEVATION BETWEEN LINES DA & DB (LOOKING SOUTH) 1/8" = 1'-0" 5

PLOT DATE: 10/31/2022 3:26:54 PM

FOR BID ONLY

Teter, LLP expressly reserves its common law copyright and other property rights in these plans. This document, the ideas and designs incorporated herein, as an instrument of professional service, is not to be used in whole or in part, for any other project without prior written authorization.

MARK	DATE	DESCRIPTION
	11/1/22	DSA BACKCHECK

TETER, LLP
ARCHITECTS ENGINEERS CONNECTED
FRESNO HEADQUARTERS
VISALIA | BAKERSFIELD | MODESTO | SAN LUIS OBISPO

TETER

TULARE CAMPUS CTE
COLLEGE OF THE SEQUOIAS
4999 E. BARDSLEY AVE.
TULARE, CA

DRAWING TITLE
WALL FRAMING ELEVATIONS

PROJECT NO.
20-12032

DRAWING
S401

\\tet-file1\Users\luis.valtierra\Documents\12032-S-COS Tulare CTE_luis.valtierra.rvt

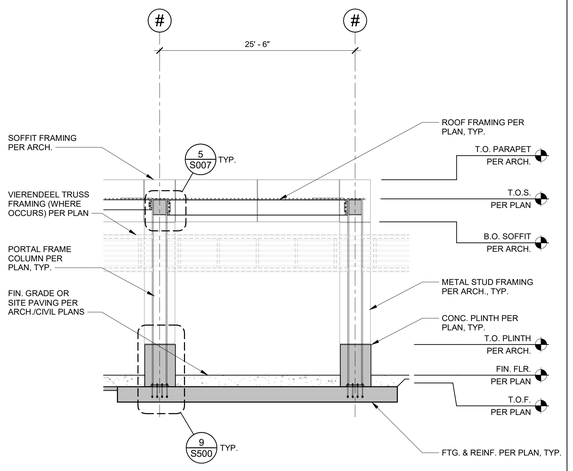

PORTAL FRAME ELEVATION AT LINE E3 (LOOKING WEST) 1/8" = 1'-0" | 22

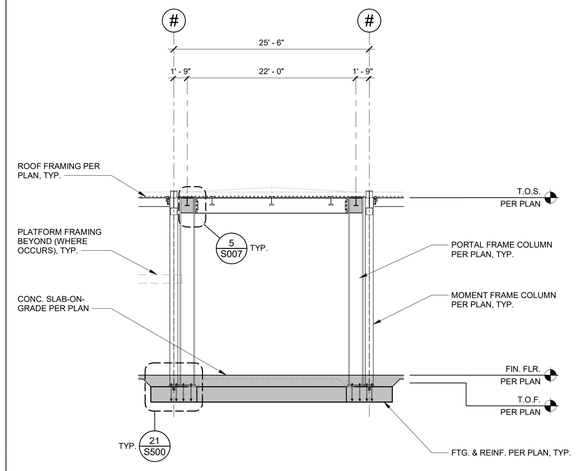

PORTAL FRAME ELEVATION AT LINE E1 (LOOKING WEST) 1/8" = 1'-0" | 17

NOTES:
FOR MOMENT FRAME ELEVATION NOTES SEE 5 S400

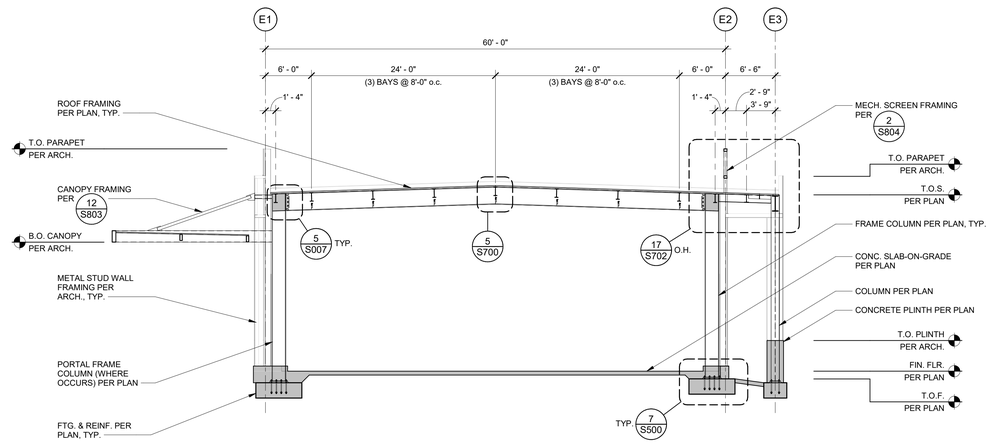

MOMENT FRAME ELEVATION AT GRIDLINE (LOOKING NORTH) 1/8" = 1'-0" | 2

NOTES:
FOR MOMENT FRAME ELEVATION NOTES SEE 5 S400

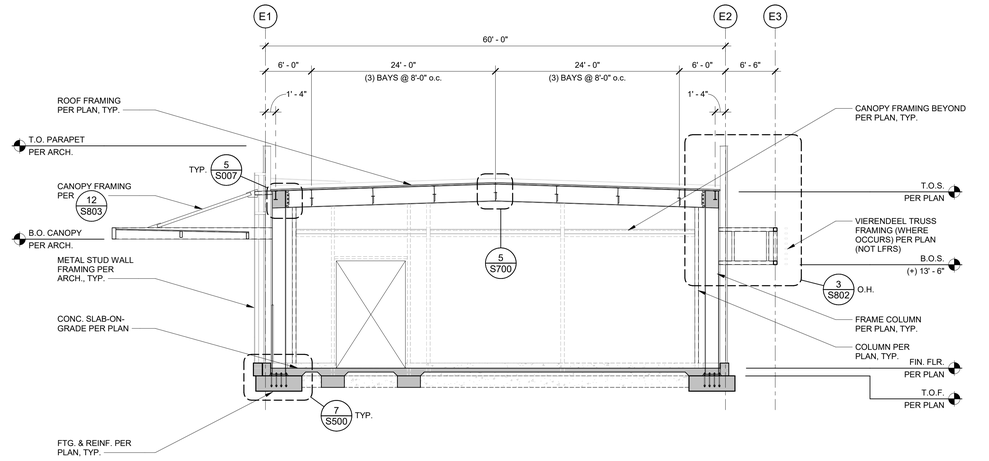

MOMENT FRAME ELEVATION AT LINE (LOOKING NORTH) 1/8" = 1'-0" | 4

PLOT DATE: 10/31/2022 3:26:59 PM

FOR BID ONLY

Teter, LLP expressly reserves its common law copyright and other property rights in these plans. This document, the ideas and designs incorporated herein, as an instrument of professional service, is not to be used in whole or part, for any other project without prior written authorization.

MARK	DATE	DESCRIPTION
	11/1/22	DSA BACKCHECK

REGISTERED PROFESSIONAL ENGINEER
E. S. BAILEY
No. 55609
STRUCTURAL
STATE OF CALIFORNIA

TETER, LLP
ARCHITECTS ENGINEERS CONSULTANTS
FRESNO HEADQUARTERS
VISALIA | BAKERSFIELD | MODESTO | SAN LUIS OBISPO

TETER

TULARE CAMPUS CTE
COLLEGE OF THE SEQUOIAS
4999 E. BARDSLEY AVE.
TULARE, CA

DRAWING TITLE
MOMENT FRAME ELEVATIONS

PROJECT NO.
20-12032

DRAWING
S410

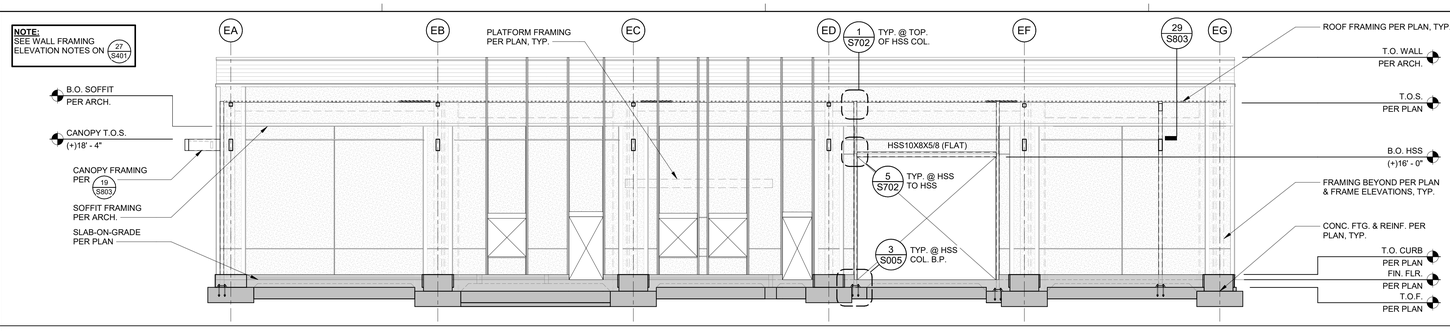

EXTERIOR WALL FRAMING ELEVATION AT LINE E1 (LOOKING EAST) 1/8" = 1'-0" 1

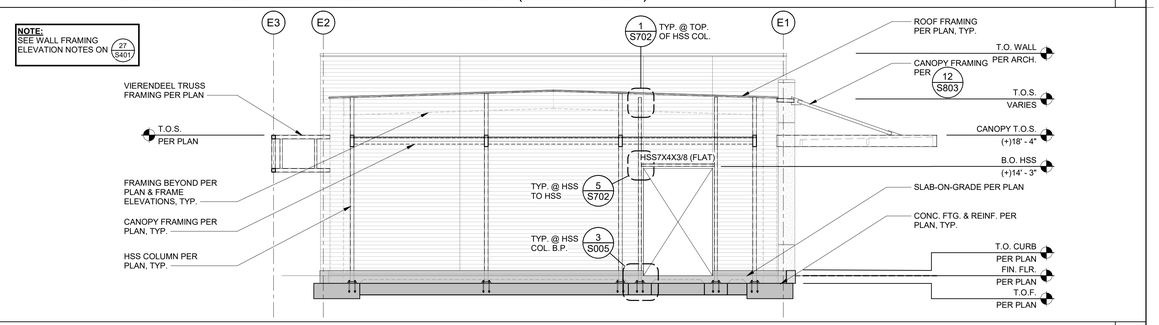

EXTERIOR WALL FRAMING ELEVATION NEAR LINE EA (LOOKING SOUTH) 1/8" = 1'-0" 2

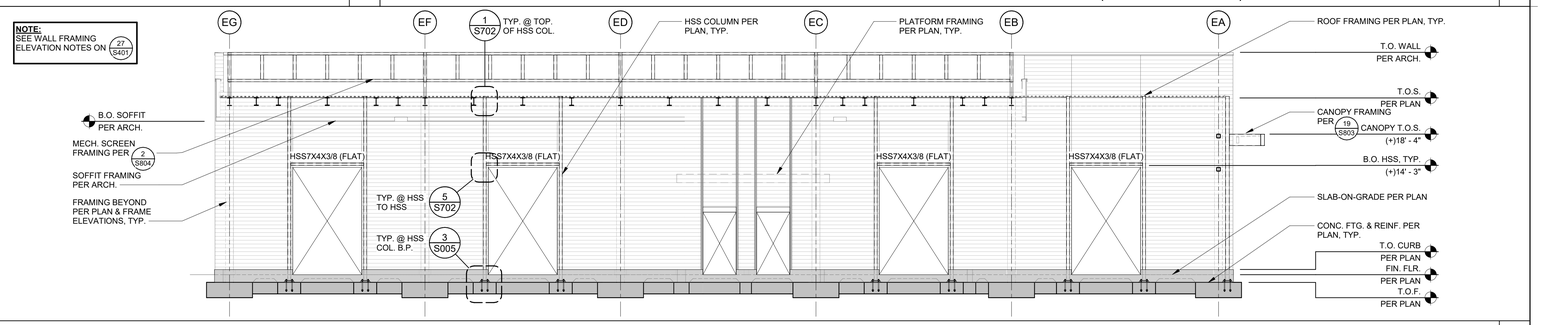

EXTERIOR WALL FRAMING ELEVATION AT LINE E2 (LOOKING WEST) 1/8" = 1'-0" 3

FOR BID ONLY

Teter, LLP expressly reserves its common law copyright and other property rights in these plans. This document, the ideas and designs incorporated herein, as an instrument of professional service, is not to be used in whole or in part, for any other project without prior written authorization.

MARK	DATE	DESCRIPTION
	11/1/22	DSA BACKCHECK

REGISTERED PROFESSIONAL ENGINEER ERIC S. BAILEY No. 55609 STRUCTURAL STATE OF CALIFORNIA

TETER, LLP
FRESNO HEADQUARTERS
VISALIA | BAKERSFIELD | MODESTO | SAN LUIS OBISPO
ARCHITECTS ENGINEERS CONNECTED

TULARE CAMPUS CTE
COLLEGE OF THE SEQUOIAS
4999 E. BARDSLEY AVE.
TULARE, CA

DRAWING TITLE
WALL FRAMING ELEVATIONS

PROJECT NO.
20-12032

DRAWING
S411

\\tetr-file1\Users\luis.valtierra\Documents\12032-S-COS Tulare CTE_luis.valtierra.rvt

PLOT DATE: 10/31/2022 3:27:05 PM

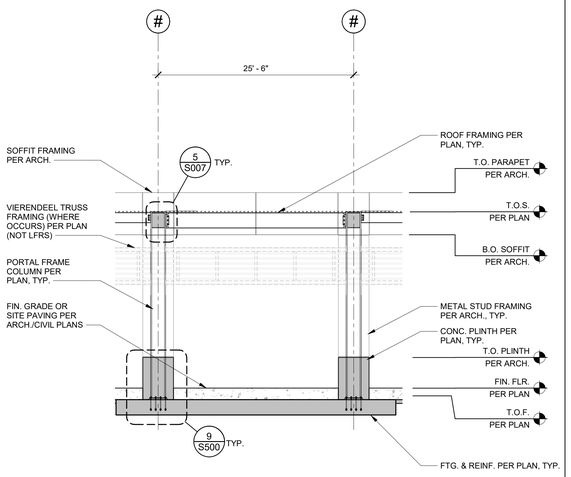

PORTAL FRAME ELEVATION AT LINE FD (LOOKING NORTH) 1/8" = 1'-0" | 22

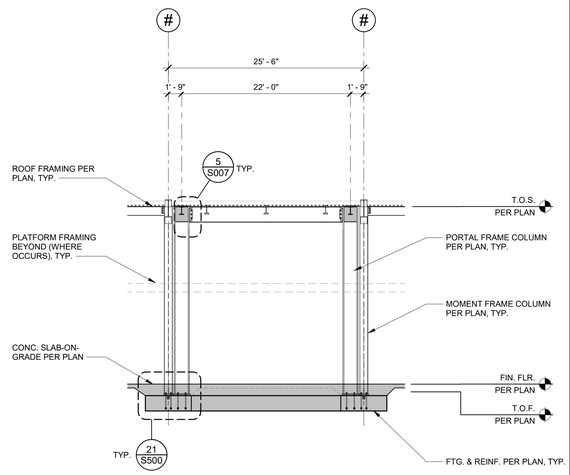

PORTAL FRAME ELEVATION AT LINE FB (LOOKING NORTH) 1/8" = 1'-0" | 17

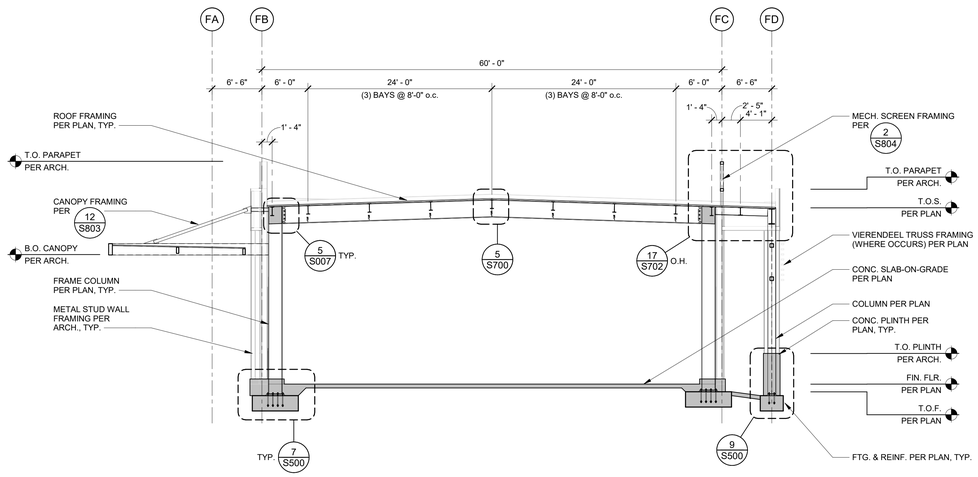

MOMENT FRAME ELEVATION AT GRIDLINE (LOOKING EAST) 1/8" = 1'-0" | 2

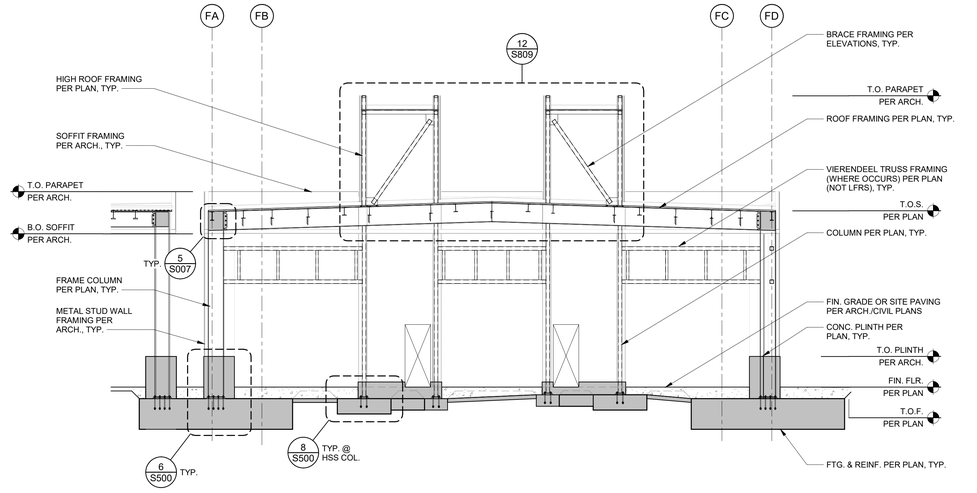

MOMENT FRAME ELEVATION AT GRIDLINE (LOOKING EAST) 1/8" = 1'-0" | 4

FOR BID ONLY

Teter, LLP expressly reserves its common law copyright and other property rights in these plans. This document, the ideas and designs incorporated herein, as an instrument of professional service, is not to be used in whole or part, for any other project without prior written authorization.

MARK	DATE	DESCRIPTION
	11/1/22	DSA BACKCHECK

REGISTERED PROFESSIONAL ENGINEER STEVEN S. BAILEY No. 55609 STRUCTURAL STATE OF CALIFORNIA

TETER, LLP
ARCHITECTS ENGINEERS CONSULTANTS
FRESNO HEADQUARTERS
VISALIA | BAKERSFIELD | MODESTO | SAN LUIS OBISPO

TETER

TULARE CAMPUS CTE
COLLEGE OF THE SEQUOIAS
4999 E. BARDSLEY AVE.
TULARE, CA

DRAWING TITLE
MOMENT FRAME ELEVATIONS

PROJECT NO.
20-12032

DRAWING
S420

PLOT DATE: 10/31/2022 3:27:10 PM

\\tet-file1\Users\luis.valtierra\Documents\12032-S-COS Tulare CTE_luis.valtierra.rvt

\\tet-file1\Users\luis.valtierra\Documents\12032-S-COS Tulare CTE_luis.valtierra.rvt

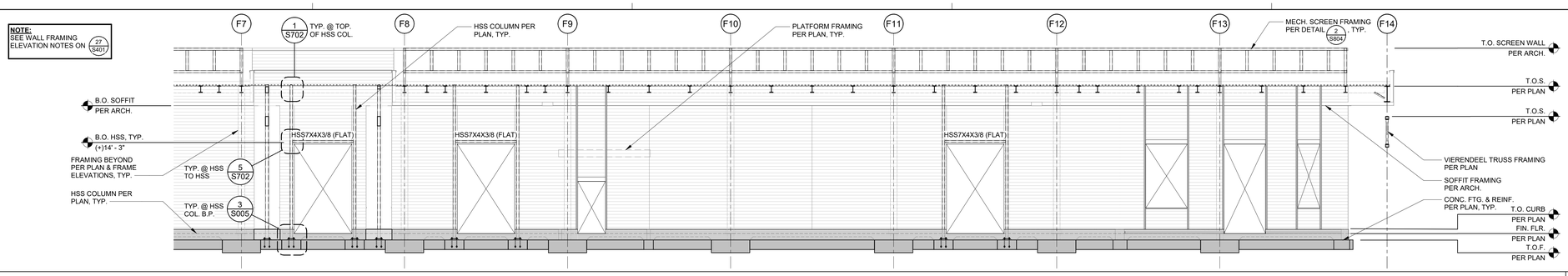

EXTERIOR WALL FRAMING ELEVATION AT LINE FC (LOOKING NORTH) — 1/8" = 1'-0" — 1

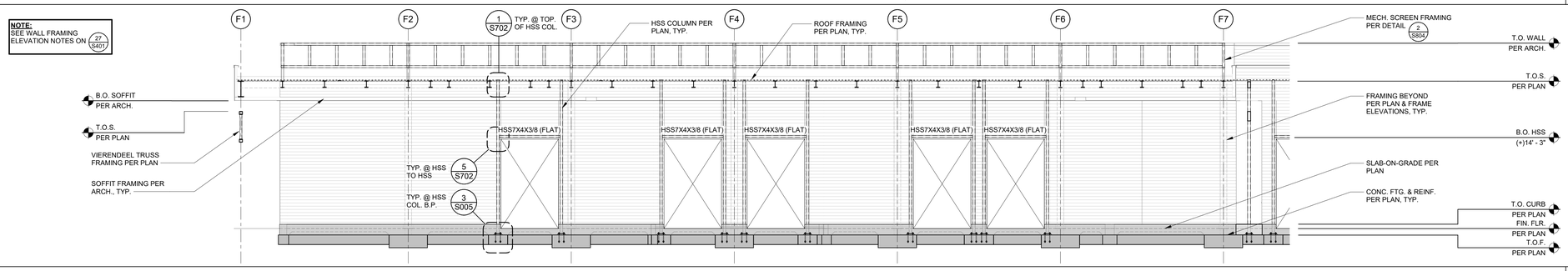

EXTERIOR WALL FRAMING ELEVATION AT LINE FC (LOOKING NORTH) — 1/8" = 1'-0" — 2

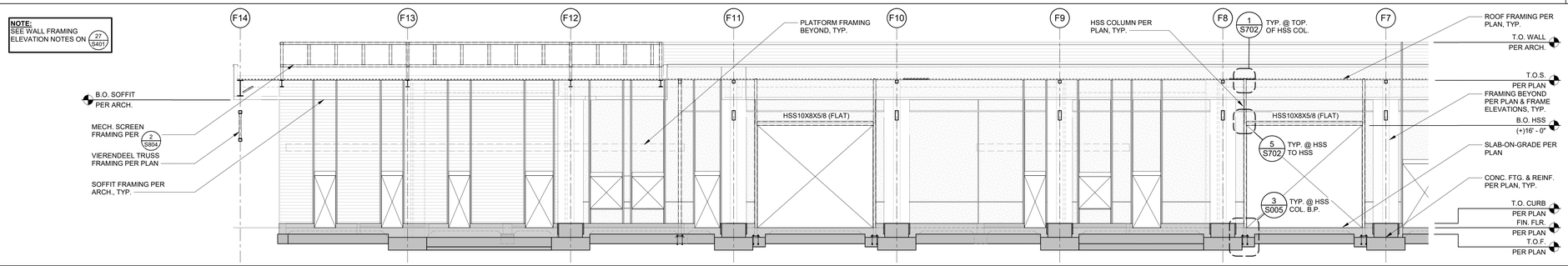

EXTERIOR WALL FRAMING ELEVATION AT LINE FB (LOOKING SOUTH) — 1/8" = 1'-0" — 3

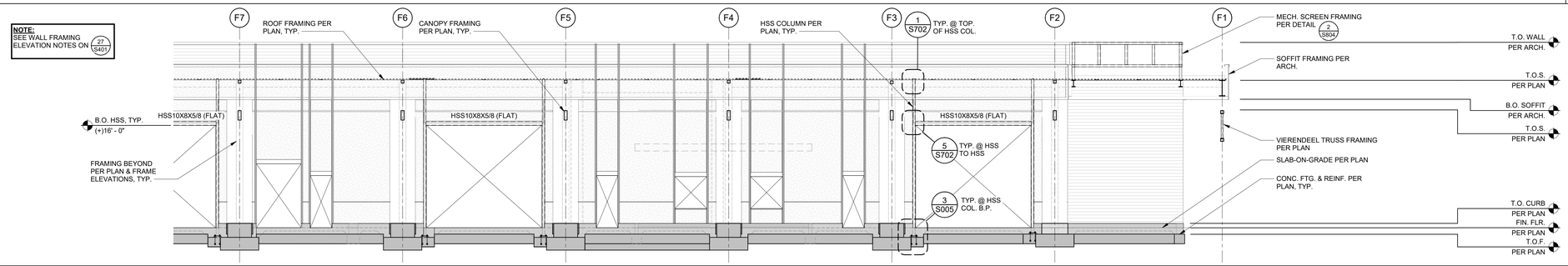

EXTERIOR WALL FRAMING ELEVATION AT LINE FB (LOOKING SOUTH) — 1/8" = 1'-0" — 4

FOR BID ONLY

Teter, LLP expressly reserves its common law copyright and other property rights in these plans. This document, the ideas and designs incorporated herein, as an instrument of professional service, is not to be used in whole or part, for any other project without prior written authorization.

MARK	DATE	DESCRIPTION
	11/1/22	DSA BACKCHECK

REGISTERED PROFESSIONAL ENGINEER — LUIS A. VALTIERRA — No. 55609 — STRUCTURAL — STATE OF CALIFORNIA

TETER, LLP
ARCHITECTS ENGINEERS CONSULTANTS
FRESNO HEADQUARTERS
VISALIA | BAKERSFIELD | MODESTO | SAN LUIS OBISPO

TETER

TULARE CAMPUS CTE
COLLEGE OF THE SEQUOIAS
4999 E. BARDSLEY AVE.
TULARE, CA

DRAWING TITLE
WALL FRAMING ELEVATIONS

PROJECT NO.
20-12032

DRAWING
S421

PLOT DATE: 10/31/2022 3:27:16 PM

NOTE:
SEE WALL FRAMING ELEVATION NOTES ON 27/S401

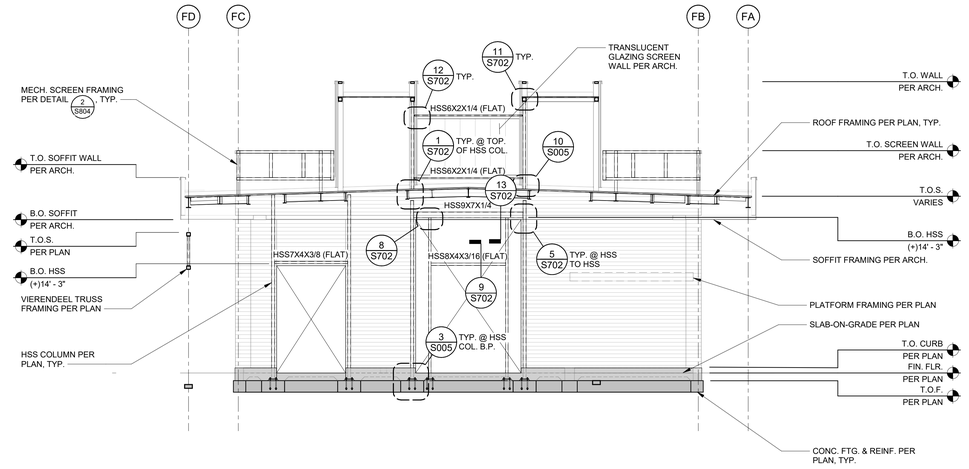

EXTERIOR WALL FRAMING ELEVATION BETWEEN LINES F13 & F14 (LOOKING WEST) 1/8" = 1'-0" 2

NOTE:
SEE WALL FRAMING ELEVATION NOTES ON 27/S401

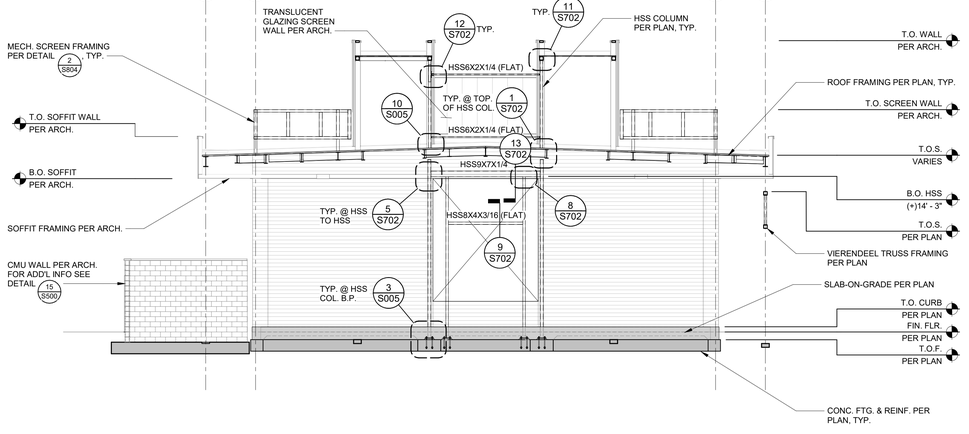

EXTERIOR WALL FRAMING ELEVATION BETWEEN LINES F1 & F2 (LOOKING EAST) 1/8" = 1'-0" 4

FOR BID ONLY

Teter, LLP expressly reserves its common law copyright and other property rights in these plans. This document, the ideas and designs incorporated herein, as an instrument of professional service, is not to be used in whole or in part, for any other project without prior written authorization.

MARK	DATE	DESCRIPTION
	11/1/22	DSA BACKCHECK

REGISTERED PROFESSIONAL ENGINEER
ERIC S. BAILEY
No. 55609
STRUCTURAL
STATE OF CALIFORNIA

TETER, LLP
FRESNO HEADQUARTERS
VISALIA | BAKERSFIELD | MODESTO | SAN LUIS OBISPO
ARCHITECTS ENGINEERS CONNECTED

TULARE CAMPUS CTE
COLLEGE OF THE SEQUOIAS
4999 E. BARDSLEY AVE.
TULARE, CA

DRAWING TITLE
WALL FRAMING ELEVATIONS

PROJECT NO.
20-12032

DRAWING
S422

\\tetr-file1\Users\luis.valtierra\Documents\12032-S-COS Tulare CTE_luis.valtierra.rvt

PLOT DATE: 10/31/2022 3:27:20 PM

\\tet-file1\Users\luis.valtierra\Documents\12032-S-COS Tulare CTE_luis.valtierra.rvt

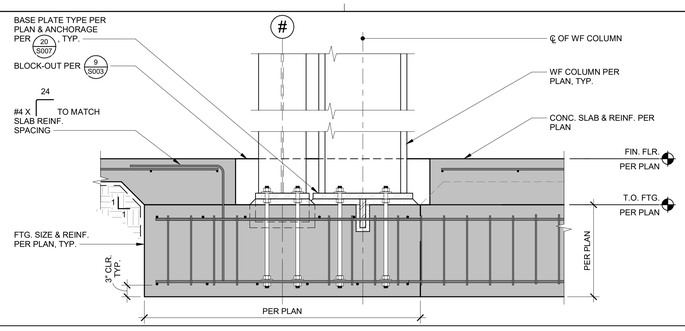

EXTERIOR COLUMN FOOTING 3/4" = 1'-0" | 21

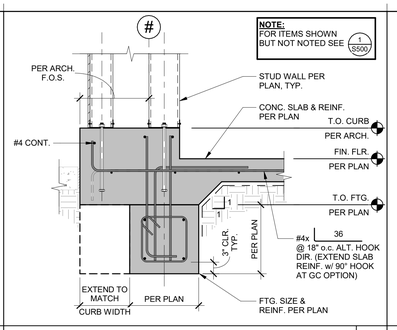

EXT. WALL FTG. AT DBL. WALL 3/4" = 1'-0" | 16

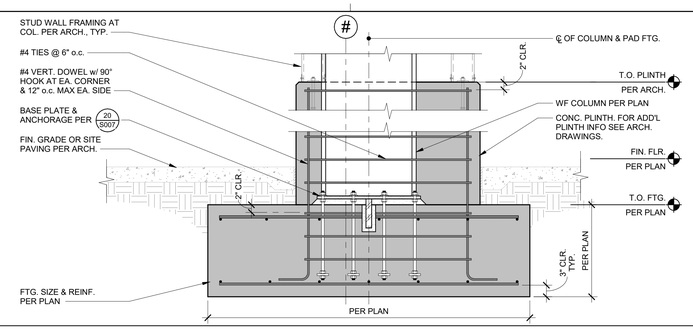

EXTERIOR COLUMN FOOTING 3/4" = 1'-0" | 6

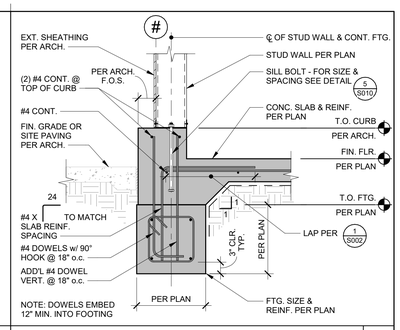

EXTERIOR WALL FOOTING 3/4" = 1'-0" | 1

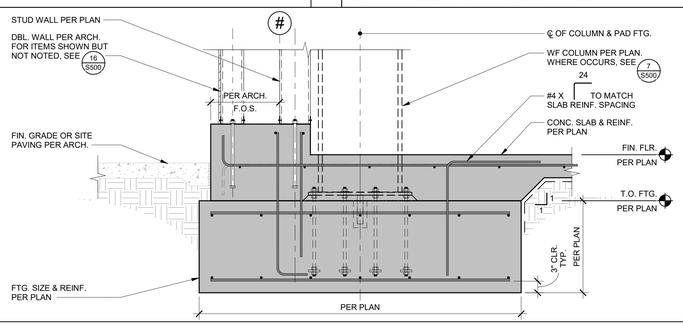

EXTERIOR COLUMN FOOTING 3/4" = 1'-0" | 11

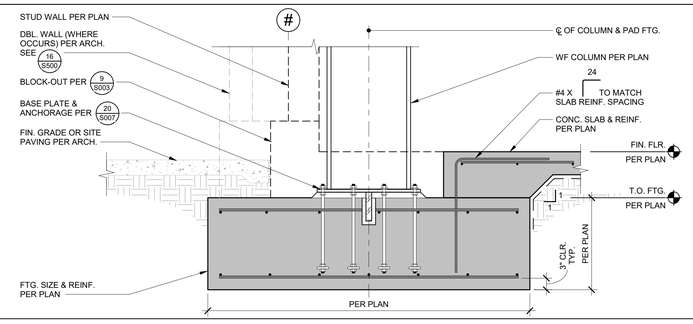

EXTERIOR COLUMN FOOTING 3/4" = 1'-0" | 7

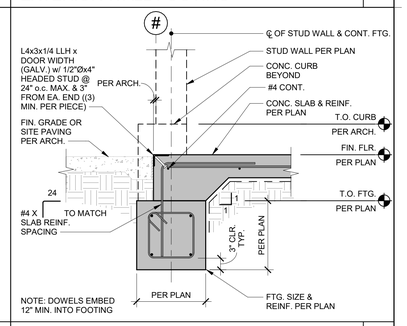

EXTERIOR WALL FOOTING AT DOOR 3/4" = 1'-0" | 2

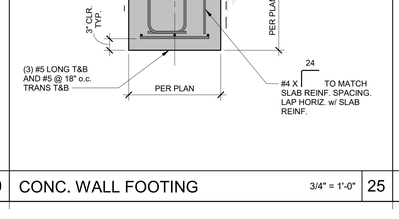

PLINTH DETAIL 3/4" = 1'-0" | 23

CMU WALL SCHEDULE			CMU WALL FOOTING SCHEDULE		
HEIGHT "H"	VERT. WALL REINF.	HORIZ. WALL REINF.	TYPE	CONT. FOOTING SIZE	FOOTING REINFORCEMENT
"H" ≤ 8'-0"	#5 @ 16" o.c.	#5 @ 24" o.c.	CF4	4'-0"WD. x 1'-6"DP.	(4) #5 LONG T&B, #5 @ 18" o.c. TRANS. T&B
8'-1" < "H" ≤ 10'-0"	#5 @ 16" o.c.	#5 @ 24" o.c.	CF4.5	4'-6"WD. x 1'-6"DP.	(4) #5 LONG T&B, #5 @ 18" o.c. TRANS. T&B
10'-1" < "H" ≤ 12'-0"	#5 @ 16" o.c.	#5 @ 24" o.c.	CF5	5'-0"WD. x 1'-6"DP.	(5) #5 LONG T&B, #5 @ 18" o.c. TRANS. T&B

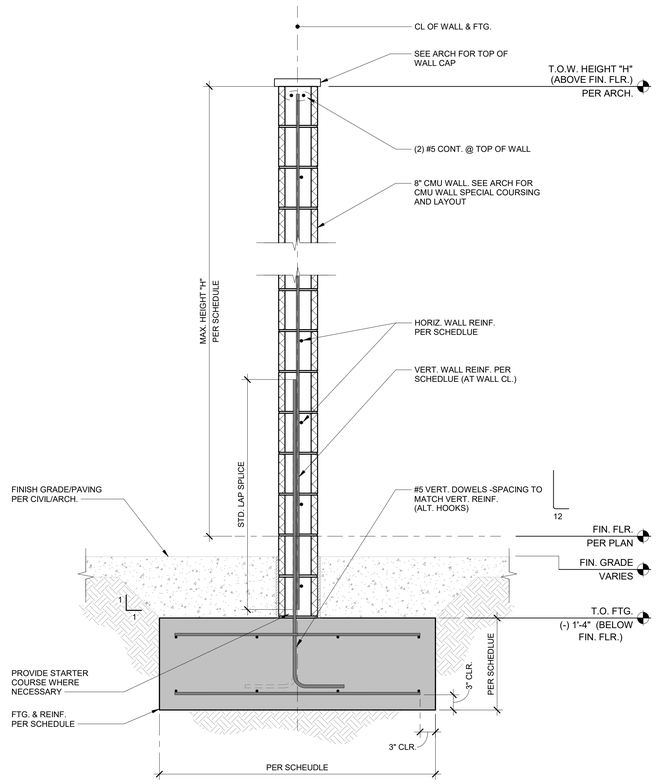

CMU WALL FOOTING DETAIL 1" = 1'-0" | 15

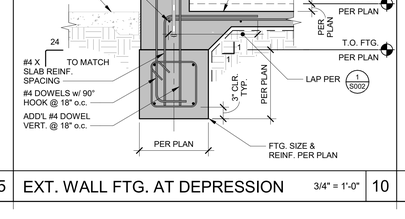

EXTERIOR COLUMN FOOTING 3/4" = 1'-0" | 8

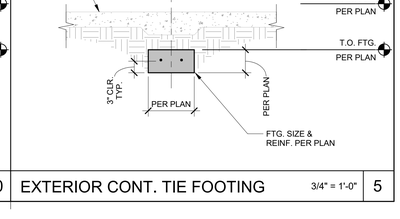

EXTERIOR COLUMN FOOTING 3/4" = 1'-0" | 3

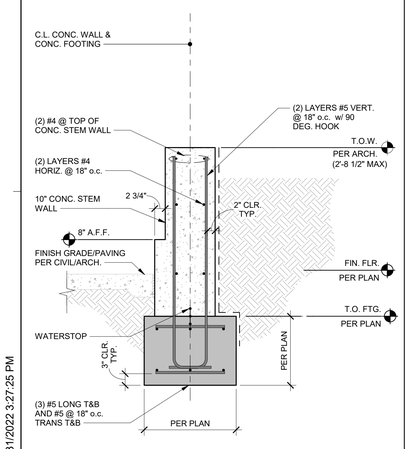

CONC. WALL FOOTING 3/4" = 1'-0" | 30

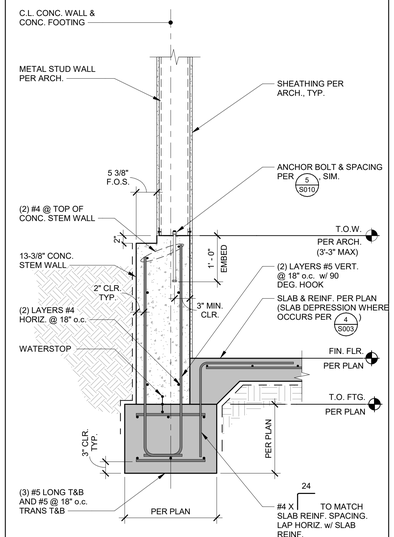

CONC. WALL FOOTING 3/4" = 1'-0" | 25

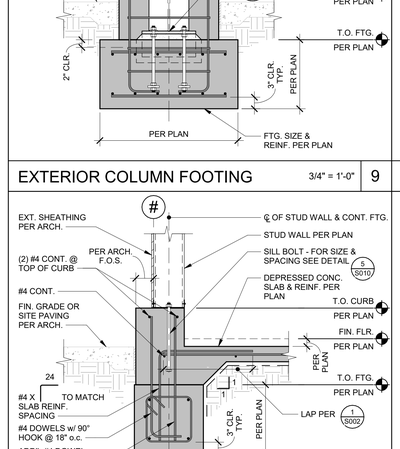

EXTERIOR COLUMN FOOTING 3/4" = 1'-0" | 9

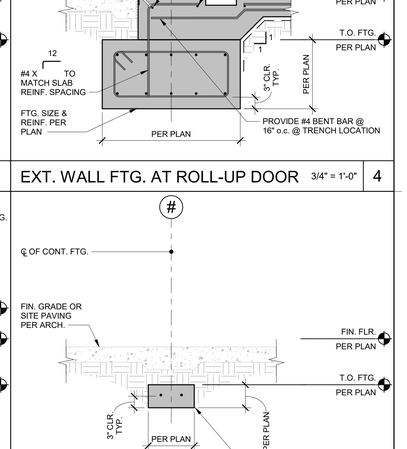

EXT. WALL FTG. AT ROLL-UP DOOR 3/4" = 1'-0" | 4

EXT. WALL FTG. AT DEPRESSION 3/4" = 1'-0" | 10

EXTERIOR CONT. TIE FOOTING 3/4" = 1'-0" | 5

PLOT DATE: 10/31/2022 3:27:25 PM

FOR BID ONLY

Teter, LLP expressly reserves its common law copyright and other property rights in these plans. This document, the ideas and designs incorporated herein, as an instrument of professional service, is not to be used in whole or in part, for any other project without prior written authorization.

MARK	DATE	DESCRIPTION
	11/1/22	DSA BACKCHECK

REGISTERED PROFESSIONAL ENGINEER * LUIS S. BALTIERRA * No. 55606 * STRUCTURAL * STATE OF CALIFORNIA

TETER, LLP
ARCHITECTS ENGINEERS CONNECTED
FRESNO HEADQUARTERS
VISALIA | BAKERSFIELD | MODESTO | SAN LUIS OBISPO

TETER

TULARE CAMPUS CTE
COLLEGE OF THE SEQUOIAS
4999 E. BARDSLEY AVE.
TULARE, CA

DRAWING TITLE
FOUNDATION DETAILS

PROJECT NO.
20-12032

DRAWING
S500

\\tet-file1\Users\luis.valtierra\Documents\12032-S-COS Tulare CTE_luis.valtierra.rvt

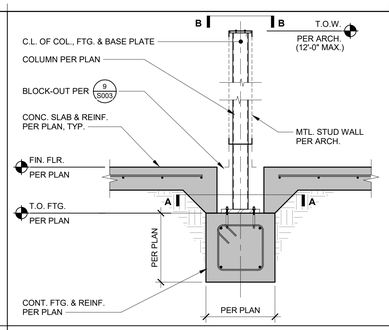

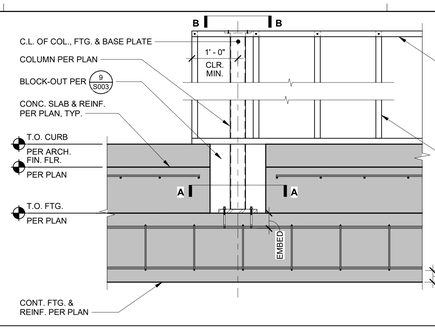

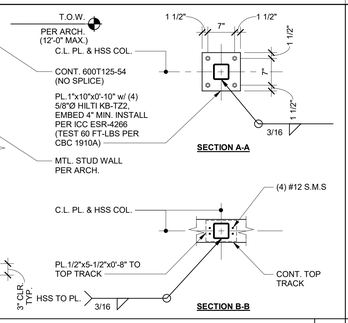

INTERIOR PARTIAL HEIGHT WALL SUPPORT 3/4" = 1'-0" | 11

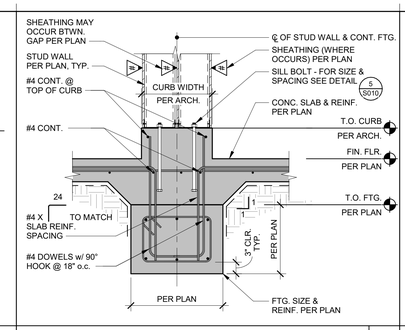

INTERIOR DBL. WALL FOOTING 3/4" = 1'-0" | 6

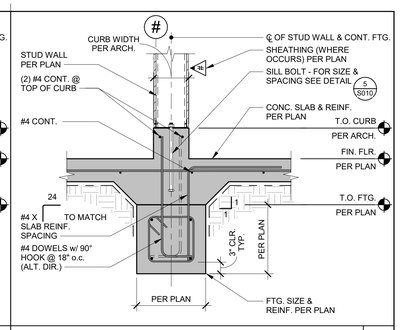

INTERIOR WALL FOOTING 3/4" = 1'-0" | 1

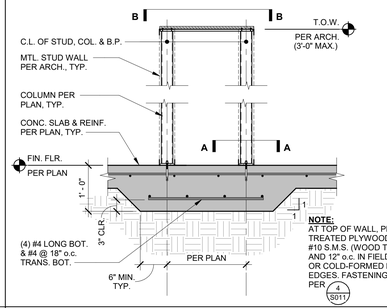

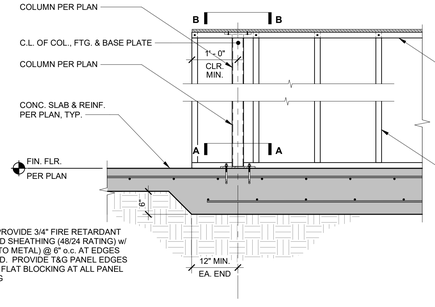

NOTE:
AT TOP OF WALL, PROVIDE 3/4" FIRE RETARDANT TREATED PLYWOOD SHEATHING (48/24 RATING) w/ #10 S.M.S. (WOOD TO METAL) @ 6" o.c. AT EDGES AND 12" o.c. IN FIELD. PROVIDE T&G PANEL EDGES OR COLD-FORMED FLAT BLOCKING AT ALL PANEL EDGES. FASTENING PER 4 S011

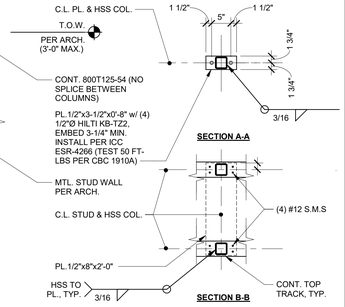

INTERIOR PARTIAL HEIGHT DBL. WALL SUPPORT 3/4" = 1'-0" | 12

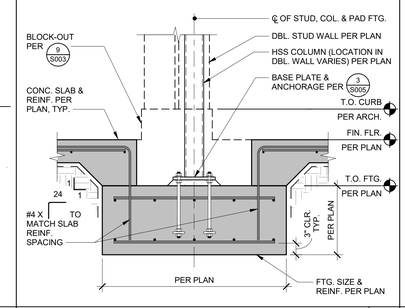

INT. COLUMN FTG. AT DBL. WALL 3/4" = 1'-0" | 7

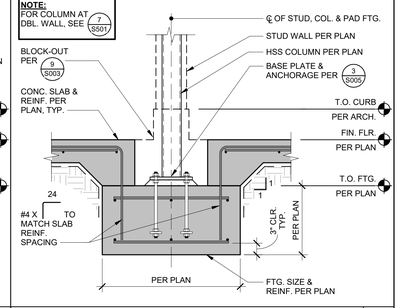

INTERIOR COLUMN FOOTING 3/4" = 1'-0" | 2

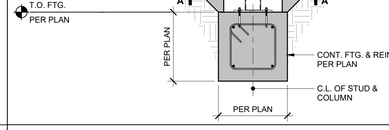

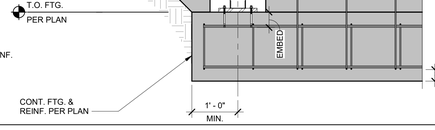

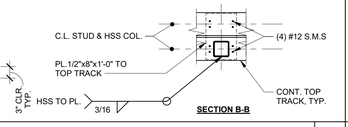

INTERIOR PARTIAL HEIGHT DBL. WALL SUPPORT 3/4" = 1'-0" | 13

PLOT DATE: 10/31/2022 3:27:29 PM

FOR BID ONLY

Teter, LLP expressly reserves its common law copyright and other property rights in these plans. This document, the ideas and designs incorporated herein, as an instrument of professional service, is not to be used in whole or in part, for any other project without prior written authorization.

MARK	DATE	DESCRIPTION
	11/1/22	DSA BACKCHECK

REGISTERED PROFESSIONAL ENGINEER * VINCENT S. RAILEY * No. 55609 * STRUCTURAL * STATE OF CALIFORNIA

TETER, LLP
ARCHITECTS ENGINEERS CONNECTED
FRESNO HEADQUARTERS
VISALIA | BAKERSFIELD | MODESTO | SAN LUIS OBISPO

TETER

TULARE CAMPUS CTE
COLLEGE OF THE SEQUOIAS
4999 E. BARDSLEY AVE.
TULARE, CA

DRAWING TITLE
FOUNDATION DETAILS

PROJECT NO.
20-12032

DRAWING
S501

\\teter-file1\Users\luis.valtierra\Documents\12032-S-CCOS Tulare CTE_luis.valtierra.rvt

NOTES:
1. VERIFY ALL PIT REQUIREMENTS w/ MANUFACTURER.
2. LOCATION OF PIT PER OWNER.

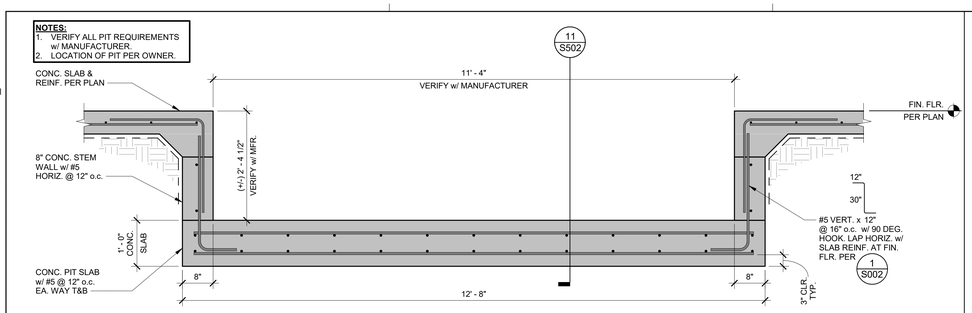

DYNAMOMETER PIT DETAIL — 3/4" = 1'-0" — 16

NOTES:
1. VERIFY ALL PIT REQUIREMENTS w/ MANUFACTURER.
2. LOCATION OF PIT PER OWNER.

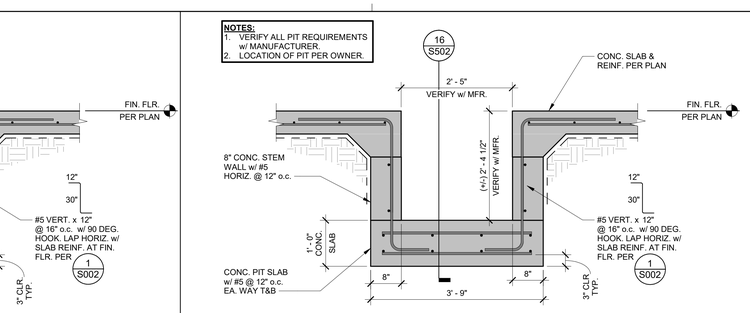

DYNAMOMETER PIT DETAIL — 3/4" = 1'-0" — 11

NOTES:
1. VERIFY ALL PIT REQUIREMENTS w/ MANUFACTURER.
2. LOCATION OF PIT PER OWNER.

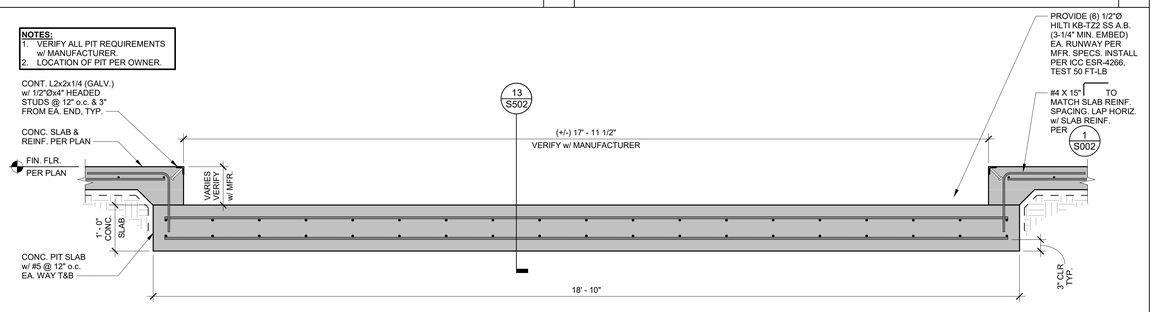

ALIGNMENT PIT DETAIL — 3/4" = 1'-0" — 12

NOTES:
1. VERIFY ALL PIT REQUIREMENTS w/ MANUFACTURER.
2. LOCATION OF PIT PER OWNER.

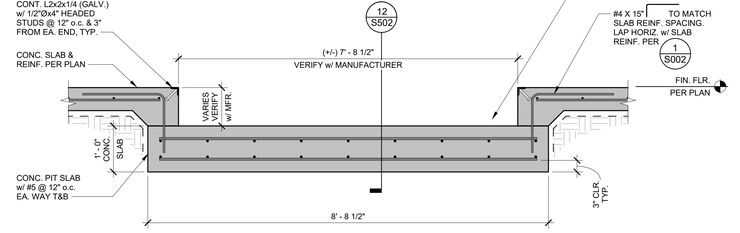

ALIGNMENT PIT DETAIL — 3/4" = 1'-0" — 13

NOTES:
1. VERIFY ALL PIT REQUIREMENTS w/ MANUFACTURER.
2. LOCTION OF PIT PER OWNER.

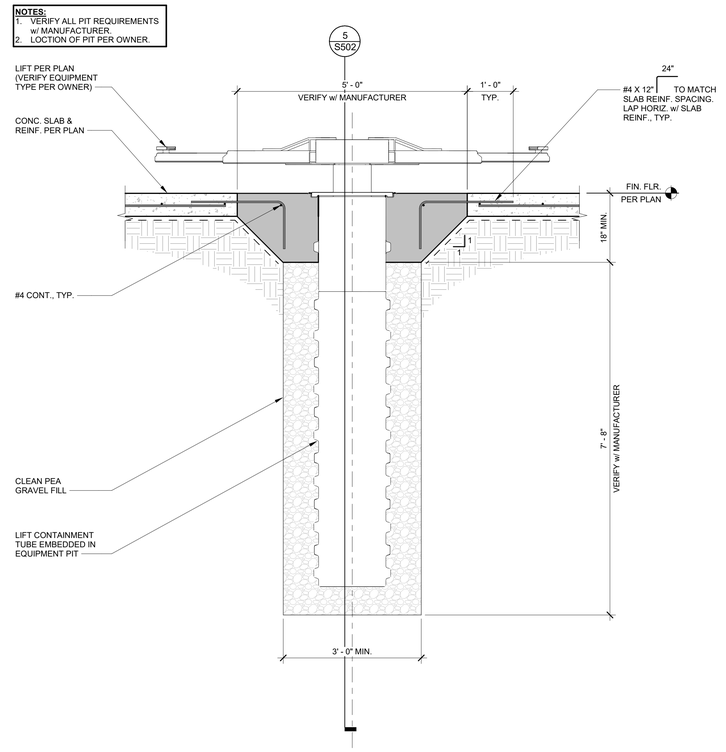

SCISSOR LIFT PIT DETAIL — 3/4" = 1'-0" — 3

NOTES:
1. VERIFY ALL PIT REQUIREMENTS w/ MANUFACTURER.
2. LOCATION OF PIT PER OWNER.

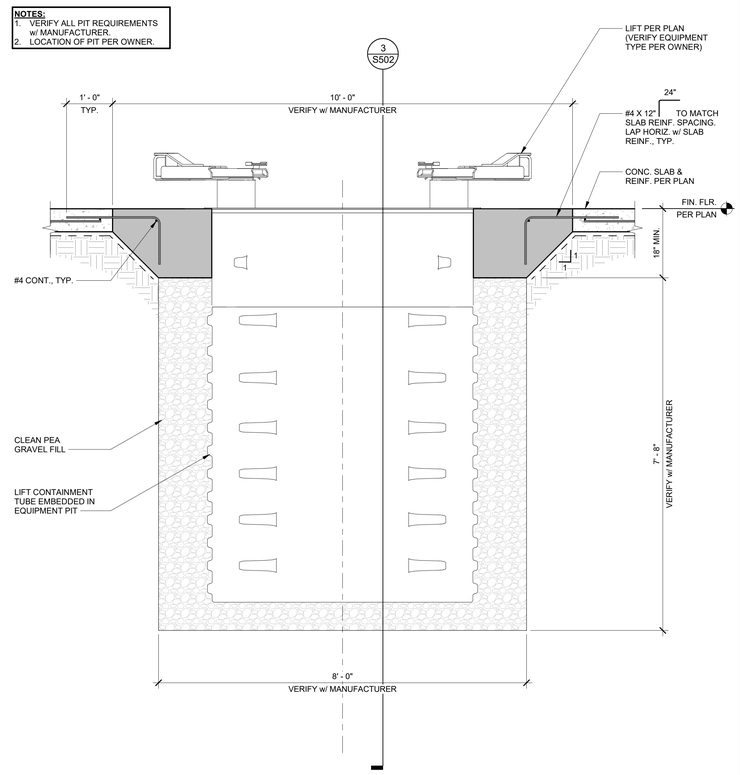

SCISSOR LIFT PIT DETAIL — 3/4" = 1'-0" — 5

PLOT DATE: 10/31/2022 3:27:37 PM

FOR BID ONLY

Teter, LLP expressly reserves its common law copyright and other property rights in these plans. This document, the ideas and designs incorporated herein, as an instrument of professional service, is not to be used in whole or in part, for any other project without prior written authorization.

MARK	DATE	DESCRIPTION
	11/1/22	DSA BACKCHECK

REGISTERED PROFESSIONAL ENGINEER — STEVEN S. BAILEY — No. 55609 — STRUCTURAL — STATE OF CALIFORNIA

TETER, LLP
FRESNO HEADQUARTERS
VISALIA | BAKERSFIELD | MODESTO | SAN LUIS OBISPO
ARCHITECTS ENGINEERS CONNECTED

TULARE CAMPUS CTE
COLLEGE OF THE SEQUOIAS
4999 E. BARDSLEY AVE.
TULARE, CA

DRAWING TITLE
FOUNDATION DETAILS

PROJECT NO.
20-12032

DRAWING
S502

\\tet-file1\Users\luis.valtierra\Documents\12032-S-COS Tulare CTE_luis.valtierra.rvt

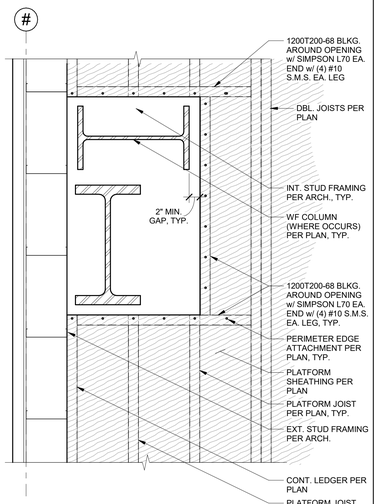

PLATFORM FRAMING DETAIL 1" = 1'-0" 27

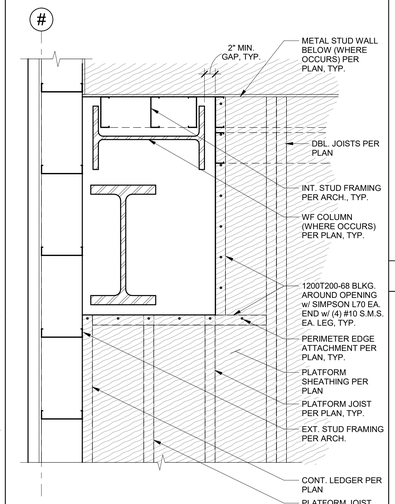

PLATFORM FRAMING DETAIL 1" = 1'-0" 22

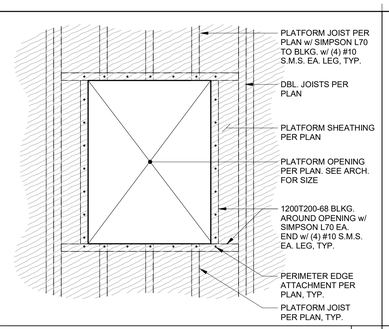

PLATFORM FRAMING DETAIL 3/4" = 1'-0" 16

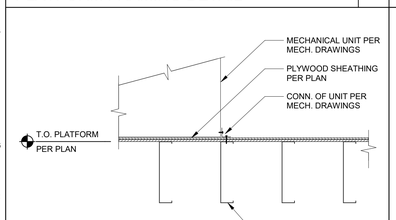

PLATFORM FRAMING DETAIL 1" = 1'-0" 17

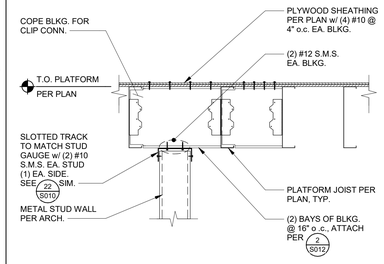

PLATFORM FRAMING DETAIL 1" = 1'-0" 11

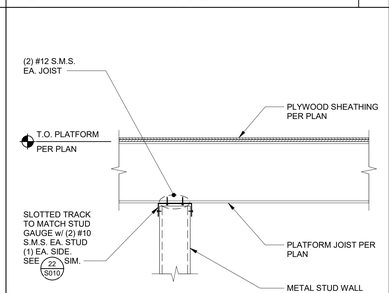

PLATFORM FRAMING DETAIL 1" = 1'-0" 12

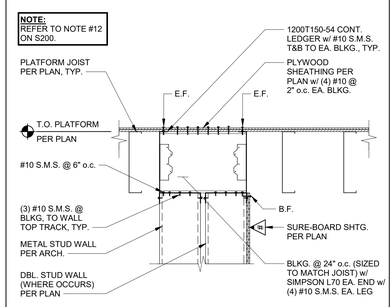

PLATFORM FRAMING DETAIL 1" = 1'-0" 13

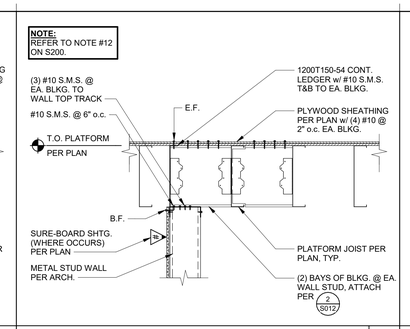

PLATFORM FRAMING DETAIL 1" = 1'-0" 6

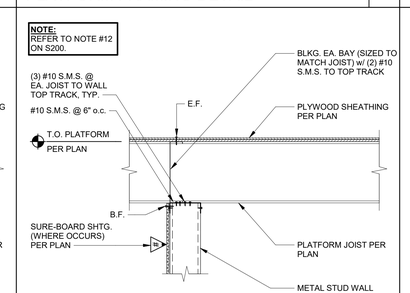

PLATFORM FRAMING DETAIL 1" = 1'-0" 7

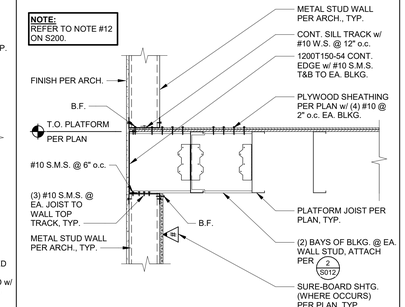

PLATFORM FRAMING DETAIL 1" = 1'-0" 8

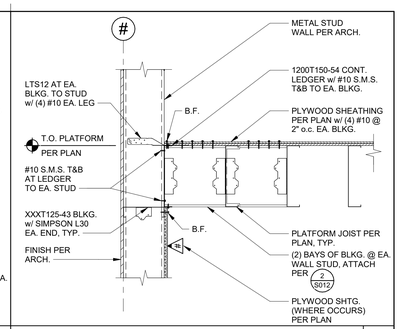

PLATFORM FRAMING DETAIL 1" = 1'-0" 1

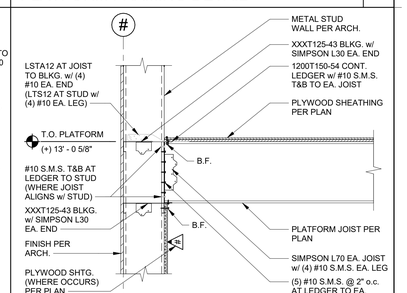

PLATFORM FRAMING DETAIL 1" = 1'-0" 2

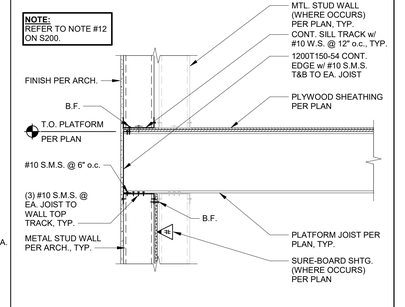

PLATFORM FRAMING DETAIL 1" = 1'-0" 3

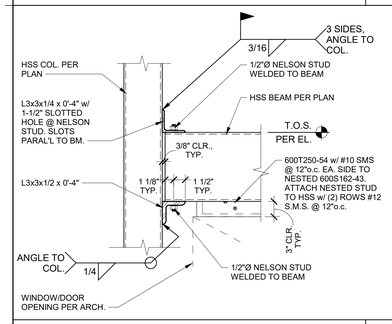

HSS HEADER @ OPENING 1 1/2" = 1'-0" 29

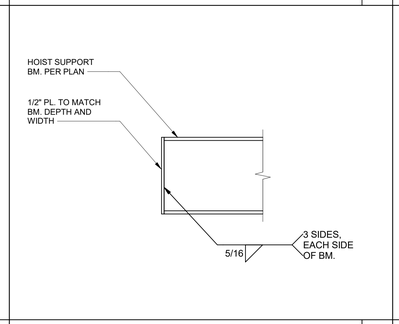

HOIST SUPPORT BEAM END PLATE 1" = 1'-0" 24

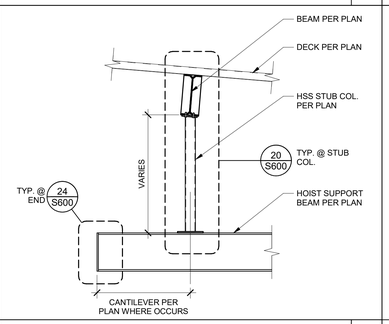

HOIST SUPPORT BEAM ELEVATION 1/2" = 1'-0" 19

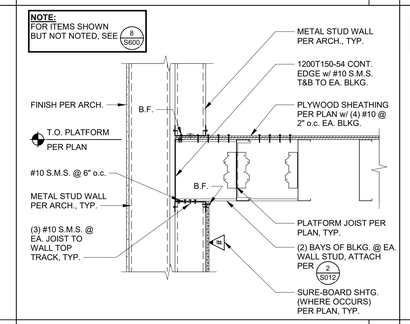

PLATFORM FRAMING DETAIL 1" = 1'-0" 9

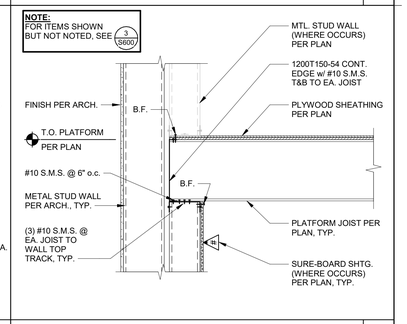

PLATFORM FRAMING DETAIL 1" = 1'-0" 4

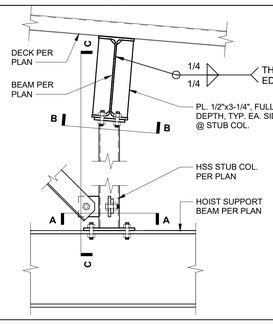

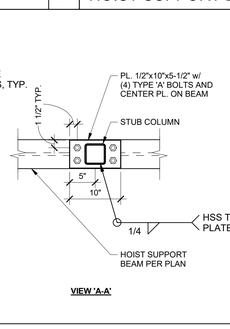

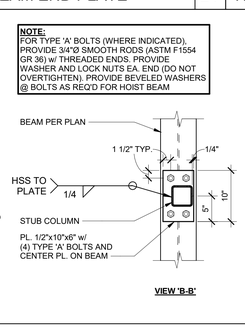

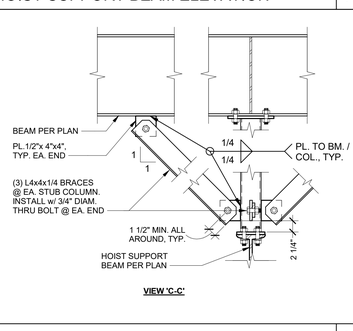

HOIST SUPPORT BEAM ATTACHMENT 1" = 1'-0" 20

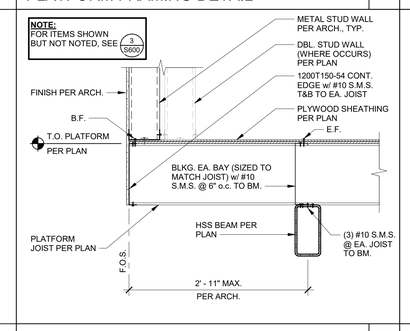

PLATFORM FRAMING DETAIL 1" = 1'-0" 10

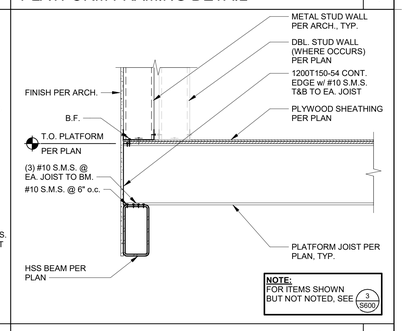

PLATFORM FRAMING DETAIL 1" = 1'-0" 5

PLOT DATE: 10/31/2022 3:27:42 PM

Teter, LLP expressly reserves its common law copyright and other property rights in these plans. This document, the ideas and designs incorporated herein, as an instrument of professional service, is not to be used in whole or in part, for any other project without prior written authorization.

FOR BID ONLY

MARK	DATE	DESCRIPTION
	11/1/22	DSA BACKCHECK

REGISTERED PROFESSIONAL ENGINEER STEVEN S. BAILEY No. 55609 STRUCTURAL STATE OF CALIFORNIA

TETER, LLP
ARCHITECTS ENGINEERS CONNECTED
FRESNO HEADQUARTERS
VISALIA | BAKERSFIELD | MODESTO | SAN LUIS OBISPO

TULARE CAMPUS CTE
COLLEGE OF THE SEQUOIAS
4999 E. BARDSLEY AVE.
TULARE, CA

DRAWING TITLE
FRAMING DETAILS

PROJECT NO.
20-12032

DRAWING
S600

\\tet-file1\Users\luis.valtierra\Documents\12032-S-COS Tulare CTE_luis.valtierra.rvt

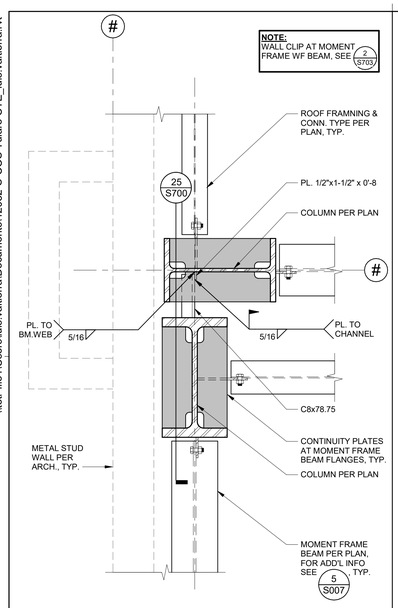

PLAN VIEW

FRAMING DETAIL 1" = 1'-0" 27

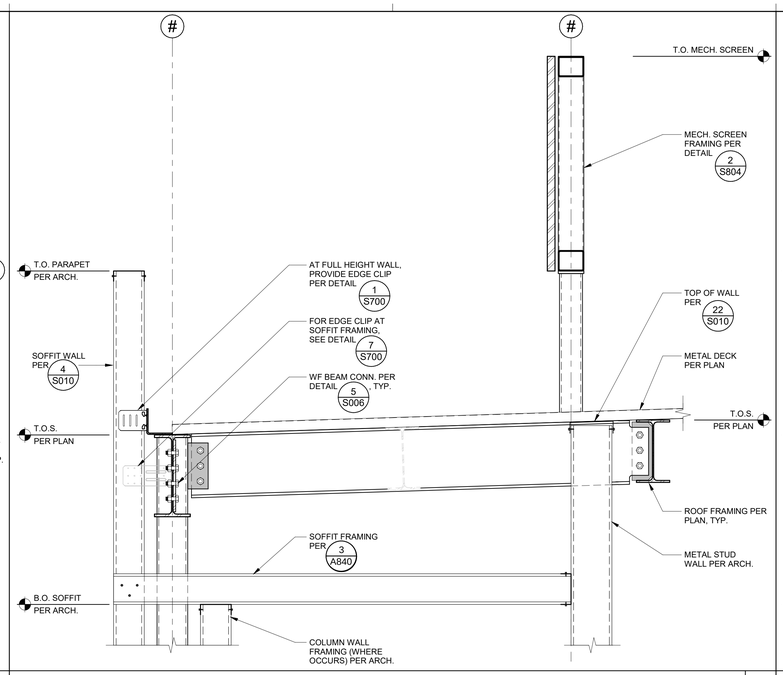

FRAMING DETAIL 1" = 1'-0" 17

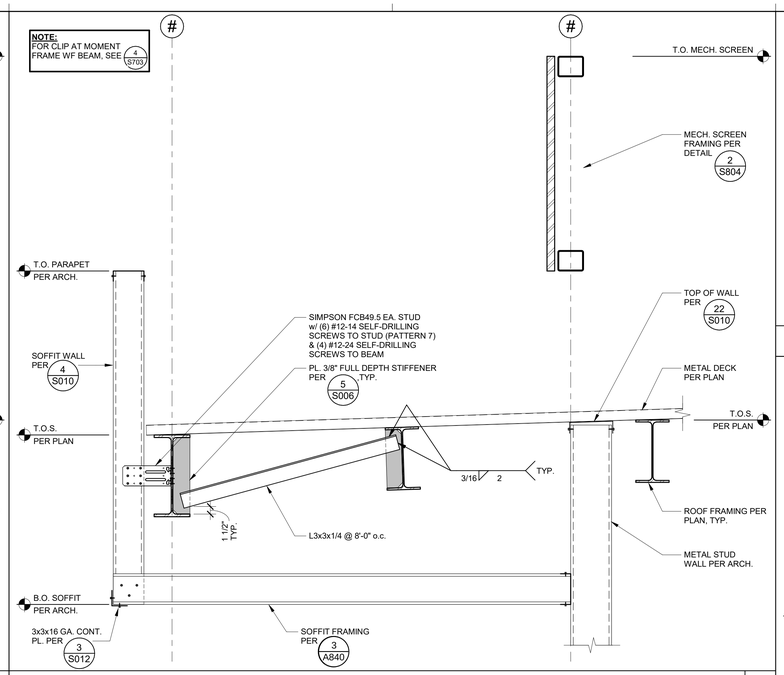

FRAMING DETAIL 1" = 1'-0" 7

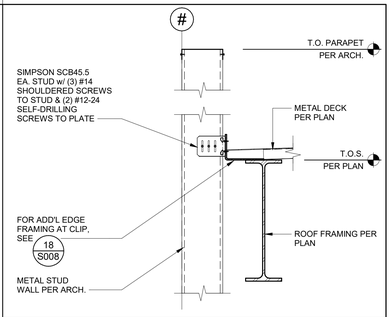

FRAMING DETAIL 1" = 1'-0" 1

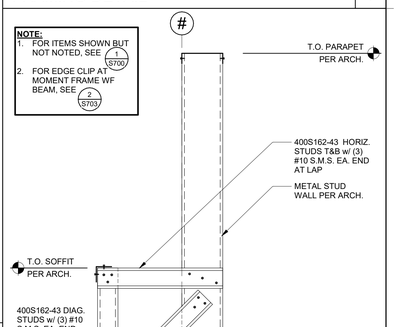

FRAMING DETAIL 1" = 1'-0" 3

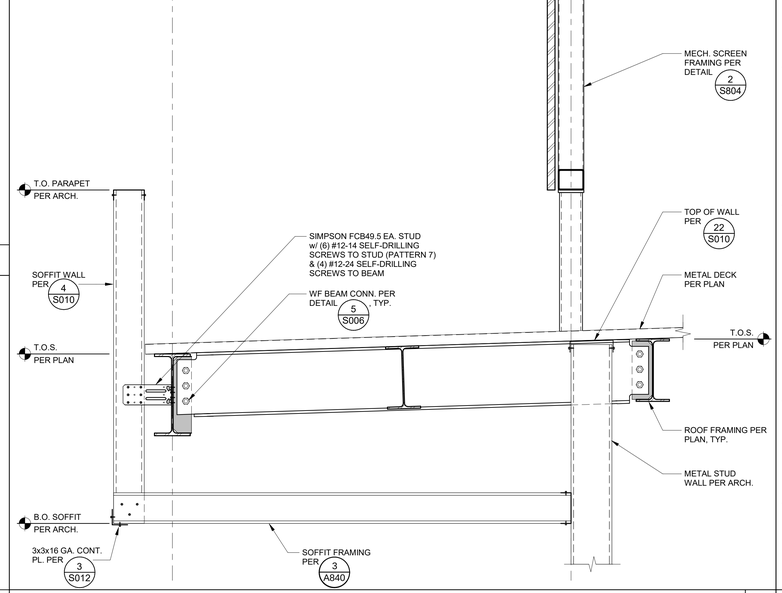

FRAMING DETAIL 1" = 1'-0" 19

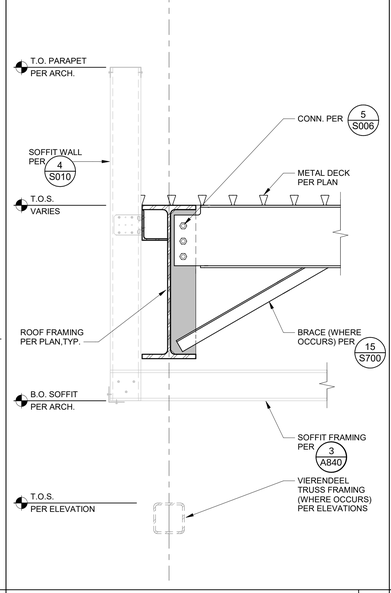

FRAMING DETAIL 1" = 1'-0" 14

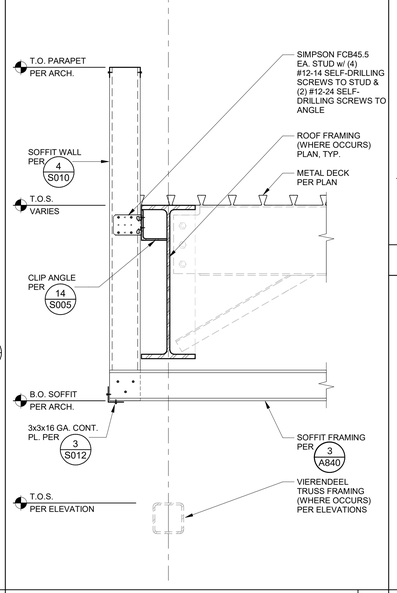

FRAMING DETAIL 1" = 1'-0" 9

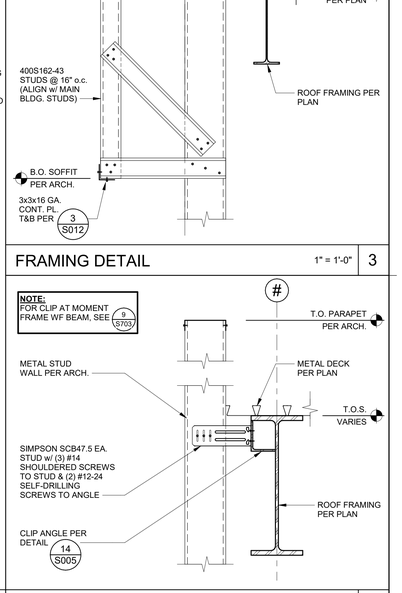

FRAMING DETAIL 1" = 1'-0" 4

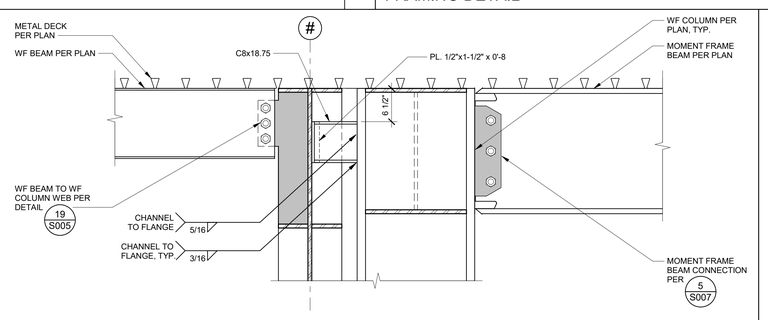

FRAMING DETAIL 1" = 1'-0" 25

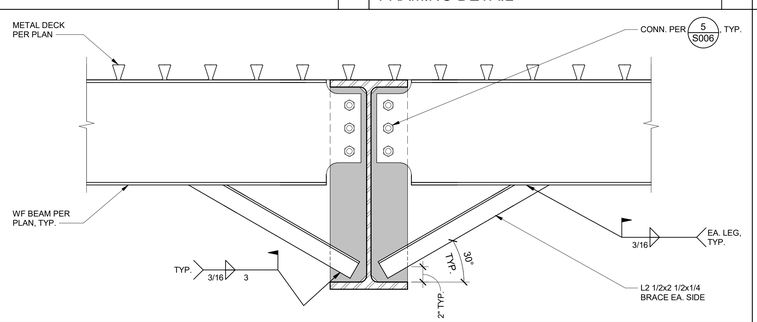

FRAMIING DETAIL 1 1/2" = 1'-0" 15

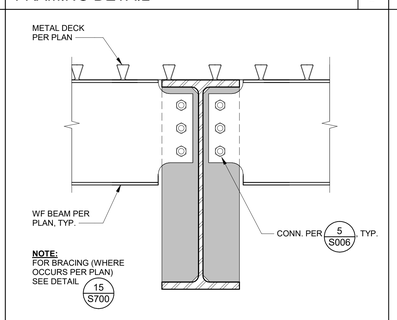

FRAMIING DETAIL 1 1/2" = 1'-0" 10

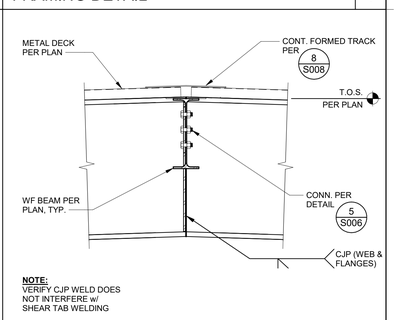

FRAMIING DETAIL 1" = 1'-0" 5

PLOT DATE: 10/31/2022 3:27:43 PM

FOR BID ONLY

Teter, LLP expressly reserves its common law copyright and other property rights in these plans. This document, the ideas and designs incorporated herein, as an instrument of professional service, is not to be used in whole or part, for any other project without prior written authorization.

MARK	DATE	DESCRIPTION
	11/1/22	DSA BACKCHECK

TETER, LLP
ARCHITECTS ENGINEERS CONNECTED
FRESNO HEADQUARTERS
VISALIA | BAKERSFIELD | MODESTO | SAN LUIS OBISPO

TULARE CAMPUS CTE
COLLEGE OF THE SEQUOIAS
4999 E. BARDSLEY AVE.
TULARE, CA

DRAWING TITLE
ROOF FRAMING DETAILS

PROJECT NO.
20-12032

DRAWING
S700

\\tet-file1\Users\luis.valtierra\Documents\12032-S-COS Tulare CTE_luis.valtierra.rvt

PLOT DATE: 10/31/2022 3:27:47 PM

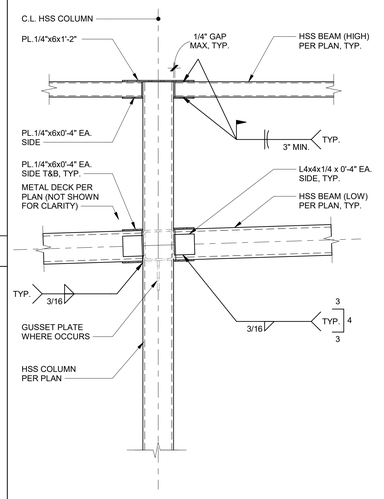

FRAMING DETAIL 1" = 1'-0" 22

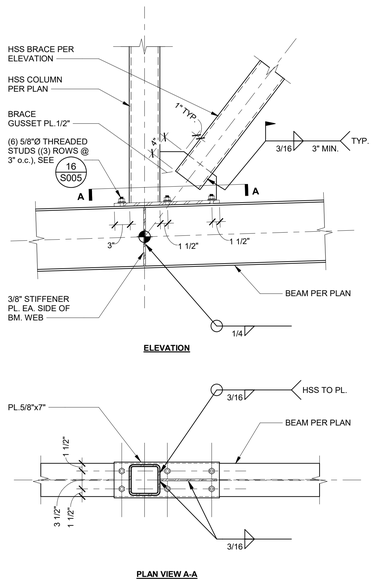

FRAMING DETAIL 1" = 1'-0" 17

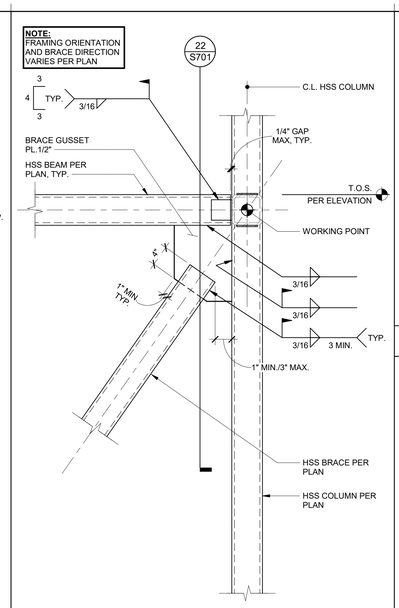

FRAMING DETAIL 1" = 1'-0" 12

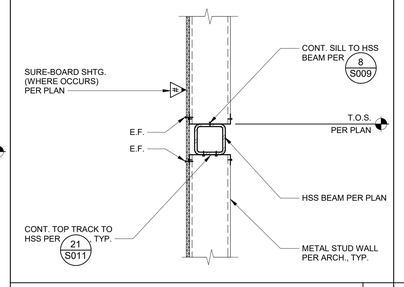

FRAMING DETAIL 1" = 1'-0" 6

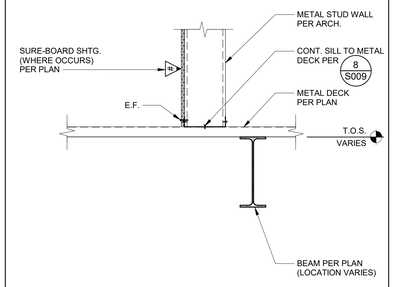

FRAMING DETAIL 1" = 1'-0" 7

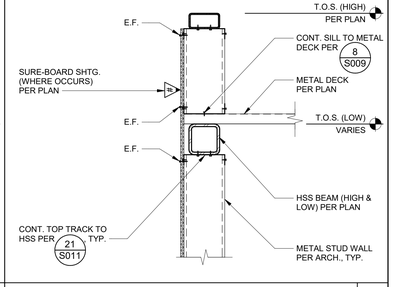

FRAMING DETAIL 1" = 1'-0" 1

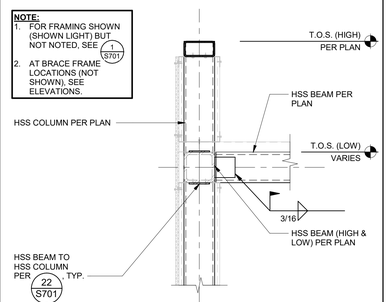

FRAMING DETAIL 1" = 1'-0" 2

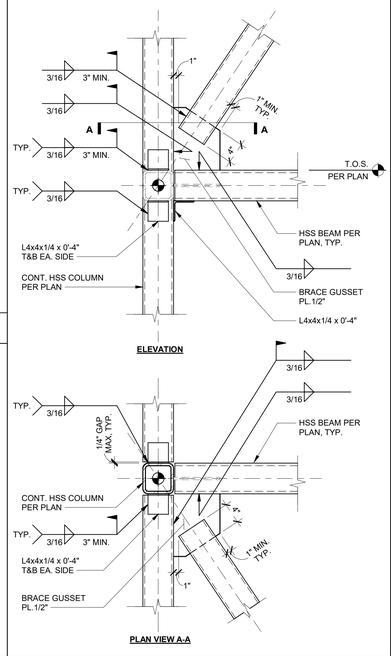

FRAMING DETAIL 1" = 1'-0" 24

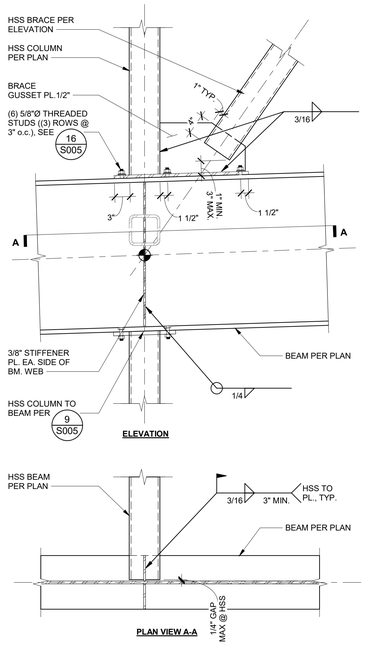

FRAMING DETAIL 1" = 1'-0" 19

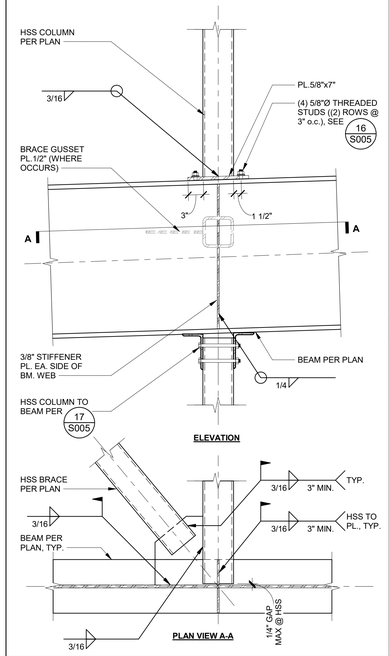

FRAMING DETAIL 1" = 1'-0" 14

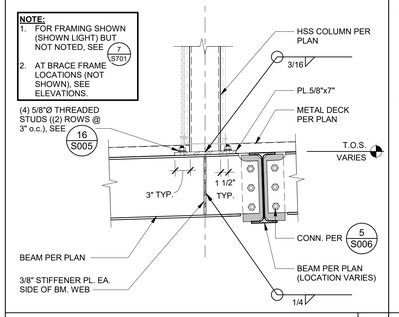

FRAMING DETAIL 1" = 1'-0" 8

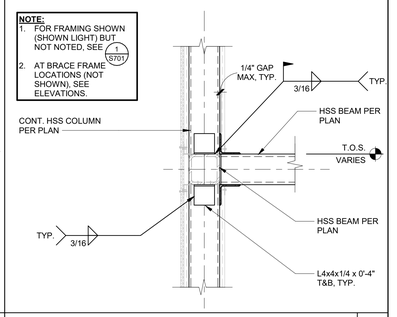

FRAMING DETAIL 1" = 1'-0" 3

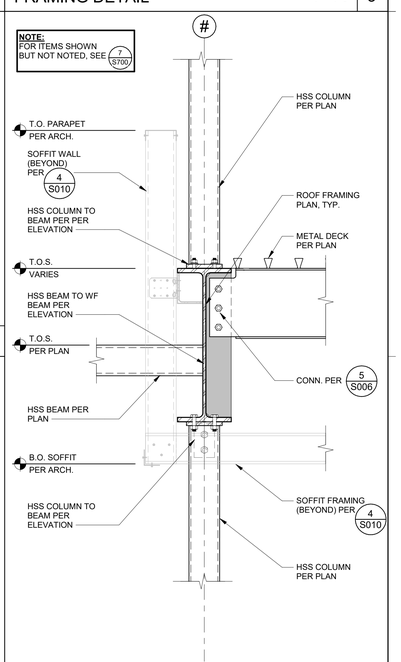

FRAMING DETAIL 1" = 1'-0" 5

FOR BID ONLY

Teter, LLP expressly reserves its common law copyright and other property rights in these plans. This document, the ideas and designs incorporated herein, as an instrument of professional service, is not to be used in whole or in part, for any other project without prior written authorization.

MARK	DATE	DESCRIPTION
	11/1/22	DSA BACKCHECK

REGISTERED PROFESSIONAL ENGINEER
S. BAILEY
No. 55609
STRUCTURAL
STATE OF CALIFORNIA

TETER, LLP
FRESNO HEADQUARTERS
VISALIA | BAKERSFIELD | MODESTO | SAN LUIS OBISPO
ARCHITECTS ENGINEERS CONNECTED

TETER

TULARE CAMPUS CTE
COLLEGE OF THE SEQUOIAS
4999 E. BARDSLEY AVE.
TULARE, CA

DRAWING TITLE
ROOF FRAMING DETAILS

PROJECT NO.
20-12032

DRAWING
S701

\\tet-file1\Users\luis.valtierra\Documents\12032-S-COS Tulare CTE_luis.valtierra.rvt

NOTE:
FOR METAL STUD FRAMING SHOWN DASHED FOR CLARITY, SEE DETAIL 7/S705

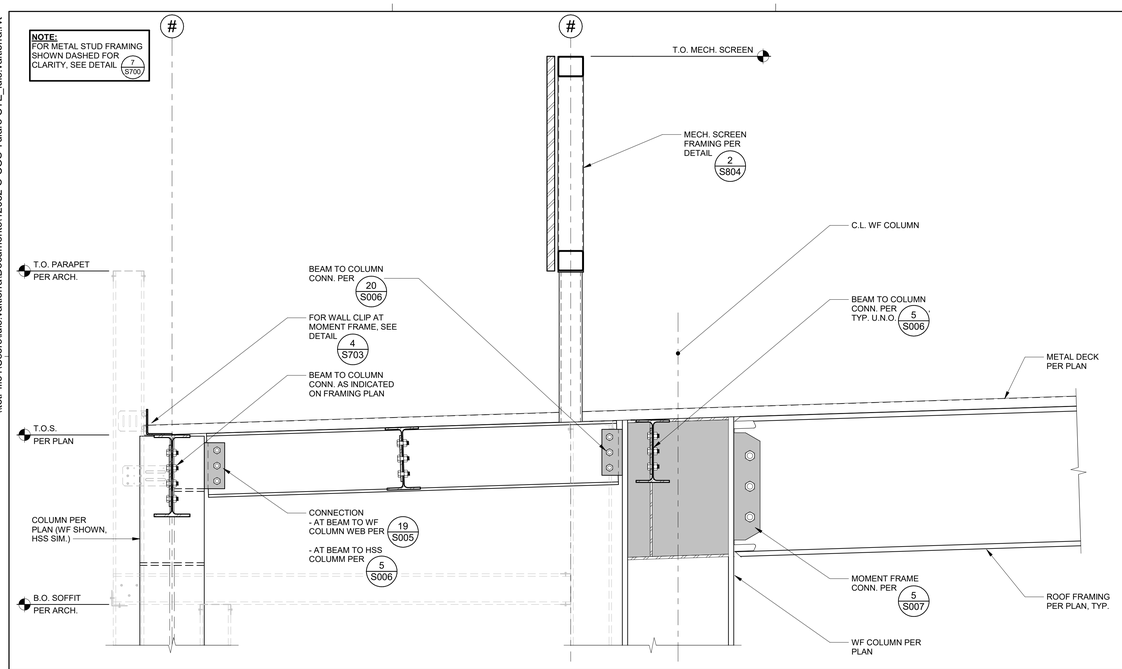

FRAMING DETAIL — 1" = 1'-0" — 17

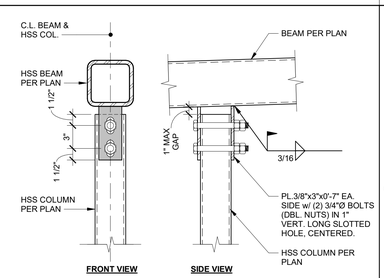

HSS TO HSS CONNECTION — 1 1/2" = 1'-0" — 11

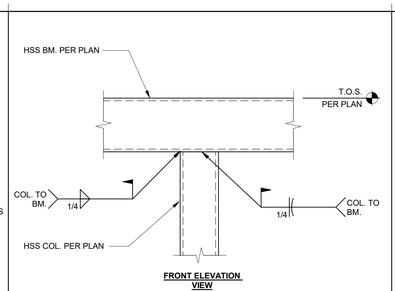

HSS TO HSS CONNECTION — 1 1/2" = 1'-0" — 6

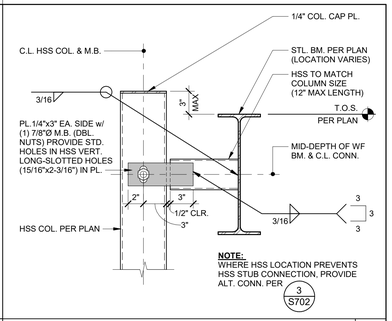

HSS COL. BRACING (SIDE VIEW) — 1 1/2" = 1'-0" — 1

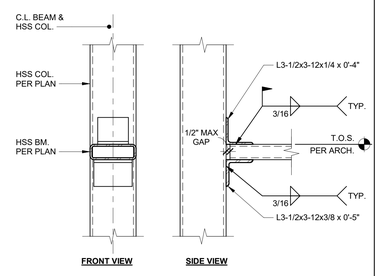

HSS TO HSS CONNECTION — 1 1/2" = 1'-0" — 12

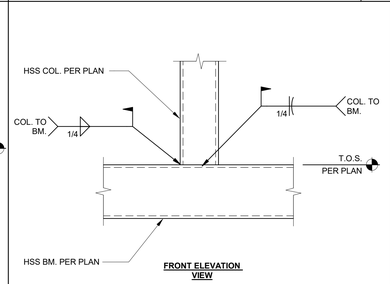

HSS TO HSS CONN. — 1 1/2" = 1'-0" — 7

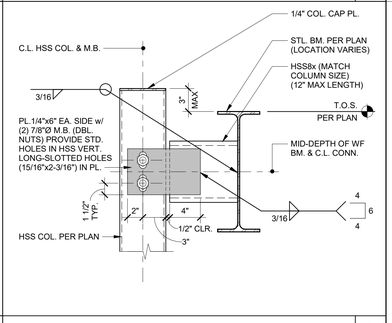

HSS COL. BRACING (SIDE VIEW) — 1 1/2" = 1'-0" — 2

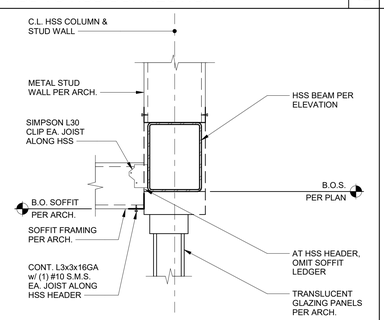

HSS TO SOFFIT FRAMING CONN. — 1 1/2" = 1'-0" — 13

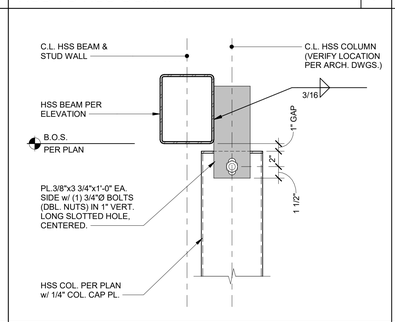

HSS TO HSS CONNECTION — 1 1/2" = 1'-0" — 8

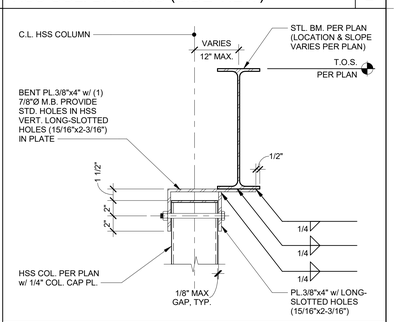

HSS COL. BRACING (SIDE VIEW) — 1 1/2" = 1'-0" — 3

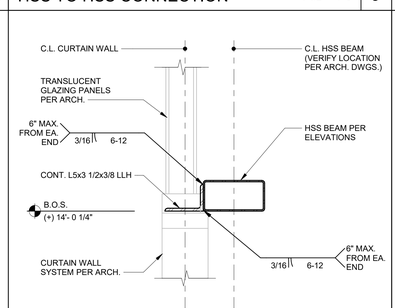

HSS TO HSS CONNECTION — 1 1/2" = 1'-0" — 9

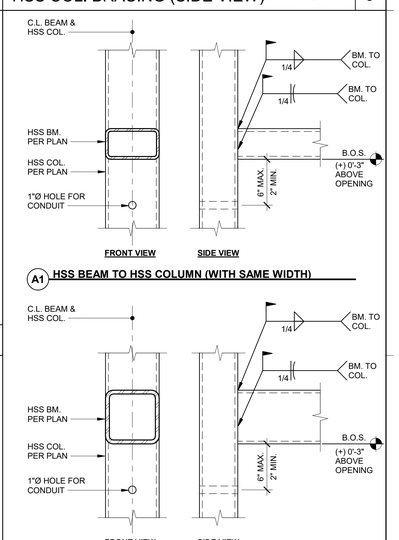

NOTES:
1. HSS SIZES VARY PER LOCATION, TYP.
2. HSS HEADERS AND JAMBS TO HAVE A 3" MIN. EDGE CLEARANCE AROUND WALL OPENING, U.N.O. REFER TO ARCHITECTURAL FOR STEEL FRAMING CLEARANCES AT BI-FOLD DOOR OPENING LOCATIONS.
3. ALL EXPOSED STEEL FRAMING SHALL BE GALVANIZED PER "STRUCTURAL STEEL" NOTE #14 ON SHEET S001.
4. AS NEEDED, PROVIDE 1"Ø HOLE FOR CONDUIT (WHERE OCCURS).

HSS TO HSS CONNECTION — 1 1/2" = 1'-0" — 5

PLOT DATE: 10/31/2022 3:27:51 PM

FOR BID ONLY

Teter, LLP expressly reserves its common law copyright and other property rights in these plans. This document, the ideas and designs incorporated herein, as an instrument of professional service, is not to be used in whole or in part, for any other project without prior written authorization.

MARK	DATE	DESCRIPTION
	11/1/22	DSA BACKCHECK

REGISTERED PROFESSIONAL ENGINEER — E. S. BAILEY — No. 55609 — STRUCTURAL — STATE OF CALIFORNIA

TETER, LLP
FRESNO HEADQUARTERS
VISALIA | BAKERSFIELD | MODESTO | SAN LUIS OBISPO
ARCHITECTS ENGINEERS CONNECTED

TULARE CAMPUS CTE
COLLEGE OF THE SEQUOIAS
4999 E. BARDSLEY AVE.
TULARE, CA

DRAWING TITLE
ROOF FRAMING DETAILS

PROJECT NO.
20-12032

DRAWING
S702

\\tet-file1\Users\luis.valtierra\Documents\12032-S-COS Tulare CTE_luis.valtierra.rvt

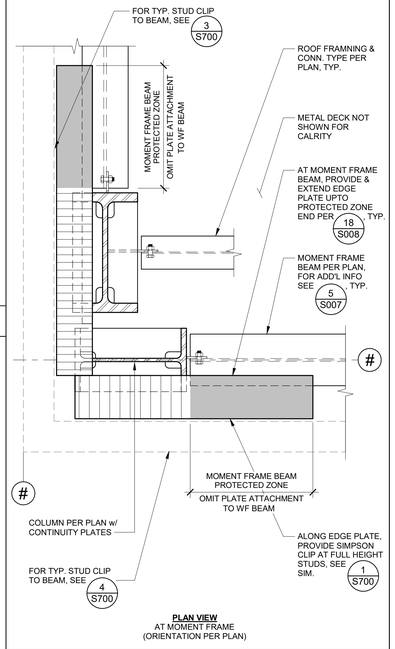

WALL STUD CLIP AT MF BEAM 1" = 1'-0" 12

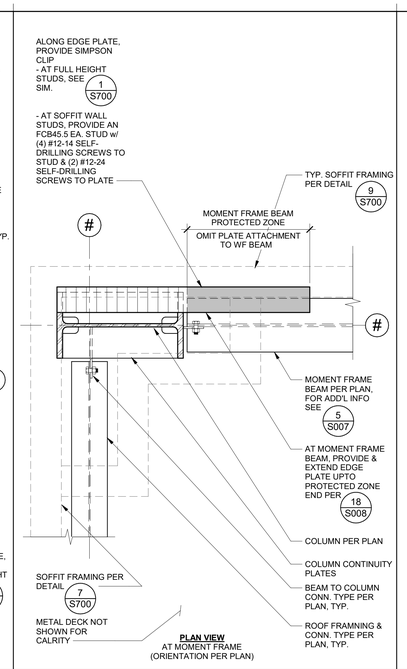

WALL STUD CLIP AT MF BEAM 1" = 1'-0" 7

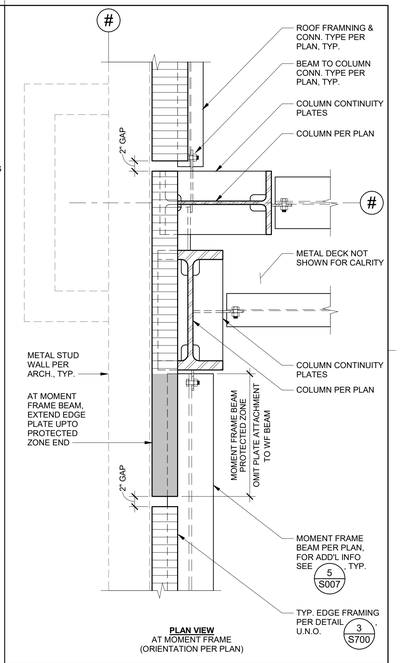

WALL STUD CLIP AT MF BEAM 1" = 1'-0" 2

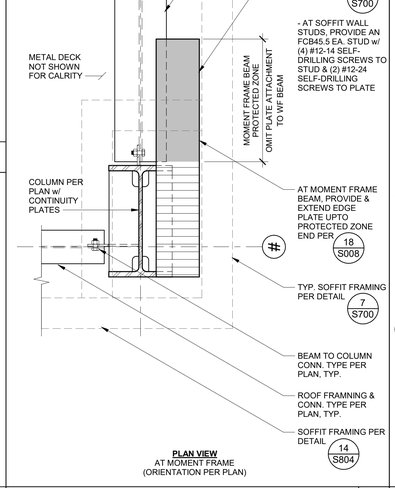

WALL STUD CLIP AT MF BEAM 1" = 1'-0" 14

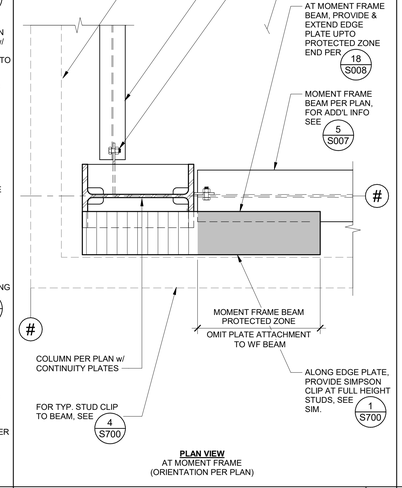

WALL STUD CLIP AT MF BEAM 1" = 1'-0" 9

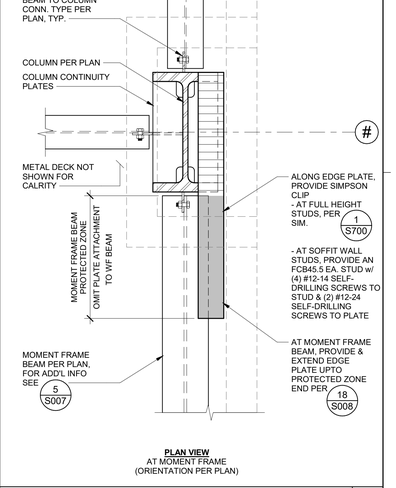

WALL STUD CLIP AT MF BEAM 1" = 1'-0" 4

Teter, LLP expressly reserves its property law copyright and other property rights in these plans. This document, the ideas and designs incorporated herein, as an instrument of professional service, is not to be used in whole or in part, for any other project without prior written authorization.

FOR BID ONLY

MARK	DATE	DESCRIPTION
	11/1/22	DSA BACKCHECK

REGISTERED PROFESSIONAL ENGINEER * VINOD S. BALI * No. 55609 * STRUCTURAL * STATE OF CALIFORNIA

TETER, LLP
FRESNO HEADQUARTERS
VISALIA | BAKERSFIELD | MODESTO | SAN LUIS OBISPO
ARCHITECTS ENGINEERS CONNECTED

TULARE CAMPUS CTE
COLLEGE OF THE SEQUOIAS
4999 E. BARDSLEY AVE.
TULARE, CA

DRAWING TITLE
ROOF FRAMING DETAILS

PROJECT NO.
20-12032

DRAWING
S703

PLOT DATE: 10/31/2022 3:27:54 PM

\\tet-file1\Users\luis.valtierra\Documents\12032-S-COS Tulare CTE_luis.valtierra.rvt

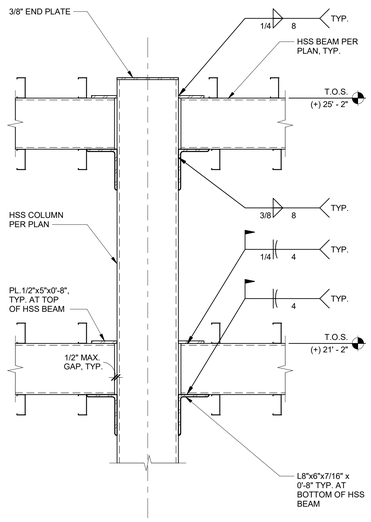

CURVED TRELLIS FRAMING DETAIL 1" = 1'-0" | 22

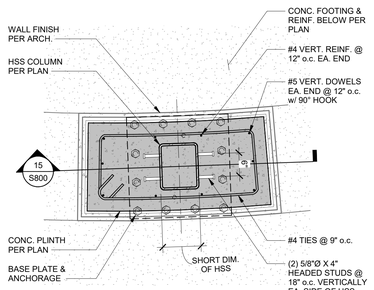

CURVED TRELLIS FOOTING DETAIL 3/4" = 1'-0" | 23

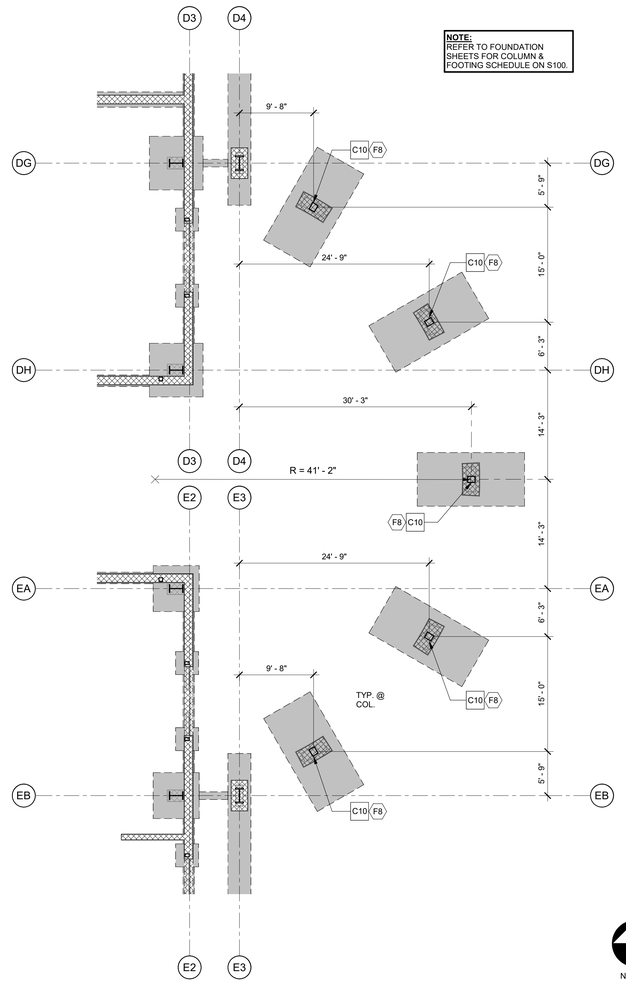

CURVED TRELLIS FOUNDATION PLAN 1/8" = 1'-0" | 13

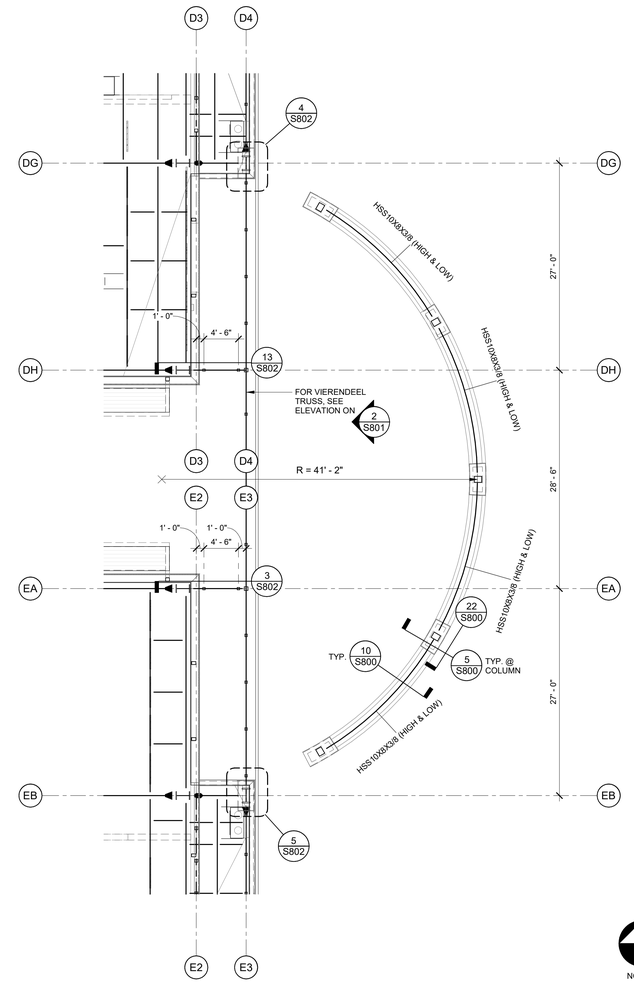

CURVED TRELLIS FRAMING PLAN 1/8" = 1'-0" | 3

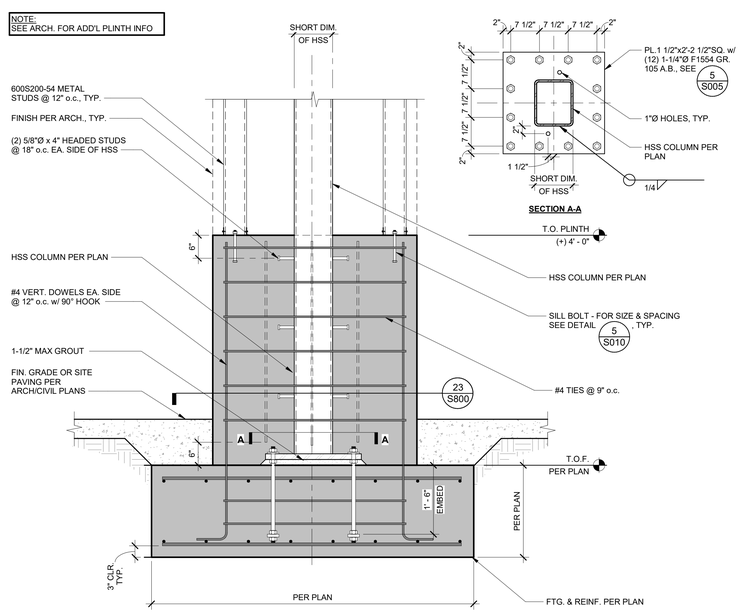

CURVED TRELLIS FOOTING DETAIL 3/4" = 1'-0" | 15

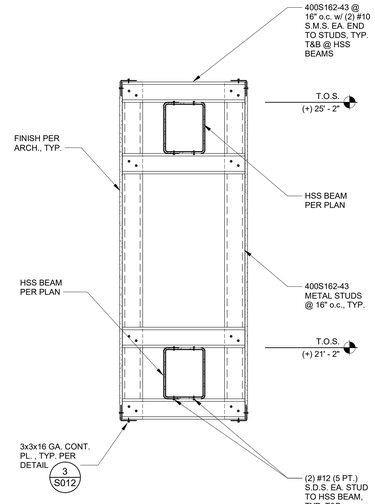

CURVED TRELLIS FRAMING DETAIL 1" = 1'-0" | 10

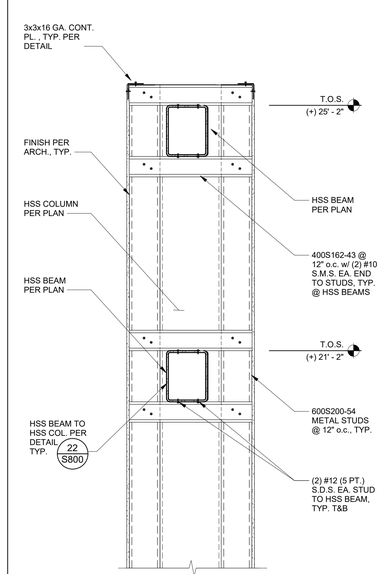

CURVED TRELLIS FRAMING DETAIL 1" = 1'-0" | 5

PLOT DATE: 10/31/2022 3:27:59 PM

FOR BID ONLY

Teter, LLP expressly reserves its common law copyright and other property rights in these plans. This document, the ideas and designs incorporated herein, as an instrument of professional service, is not to be used in whole or in part, for any other project without prior written authorization.

MARK	DATE	DESCRIPTION
	11/1/22	DSA BACKCHECK

REGISTERED PROFESSIONAL ENGINEER LUIS S. BALTIERRA No. 55609 STRUCTURAL STATE OF CALIFORNIA

TETER, LLP
FRESNO HEADQUARTERS
VISALIA | BAKERSFIELD | MODESTO | SAN LUIS OBISPO
ARCHITECTS ENGINEERS CONNECTED

TETER

TULARE CAMPUS CTE
COLLEGE OF THE SEQUOIAS
4999 E. BARDSLEY AVE.
TULARE, CA

DRAWING TITLE
MISCELLANEOUS FRAMING & DETAILS

PROJECT NO.
20-12032

DRAWING
S800

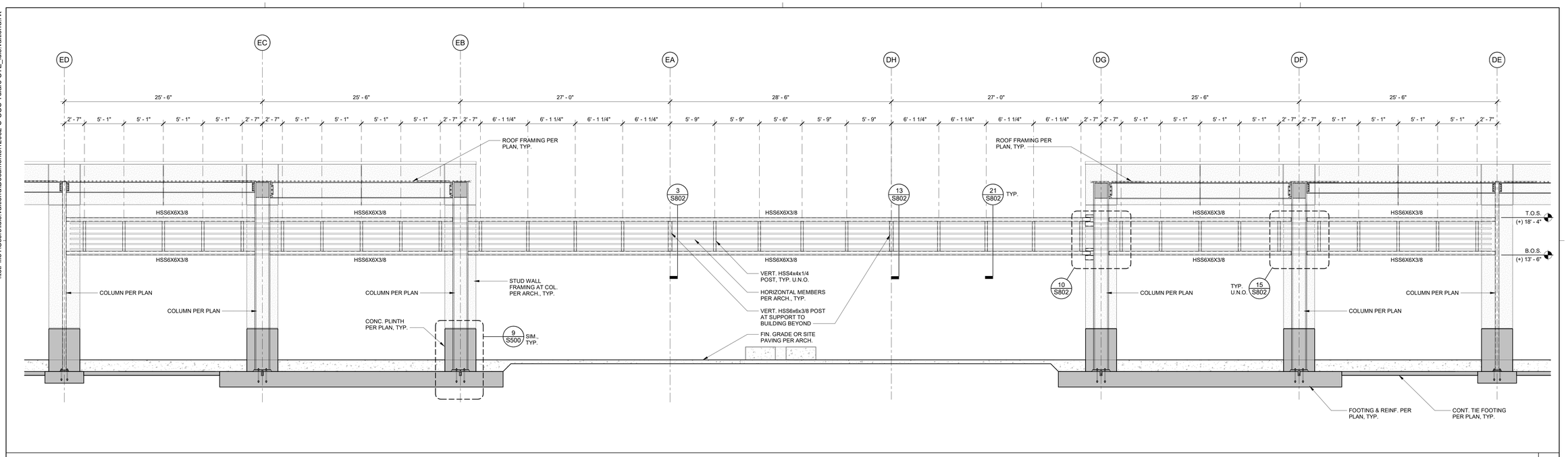

BUILDINGS D & E - VIERENDEEL TRUSS ELEVATION — 3/16" = 1'-0" — 2

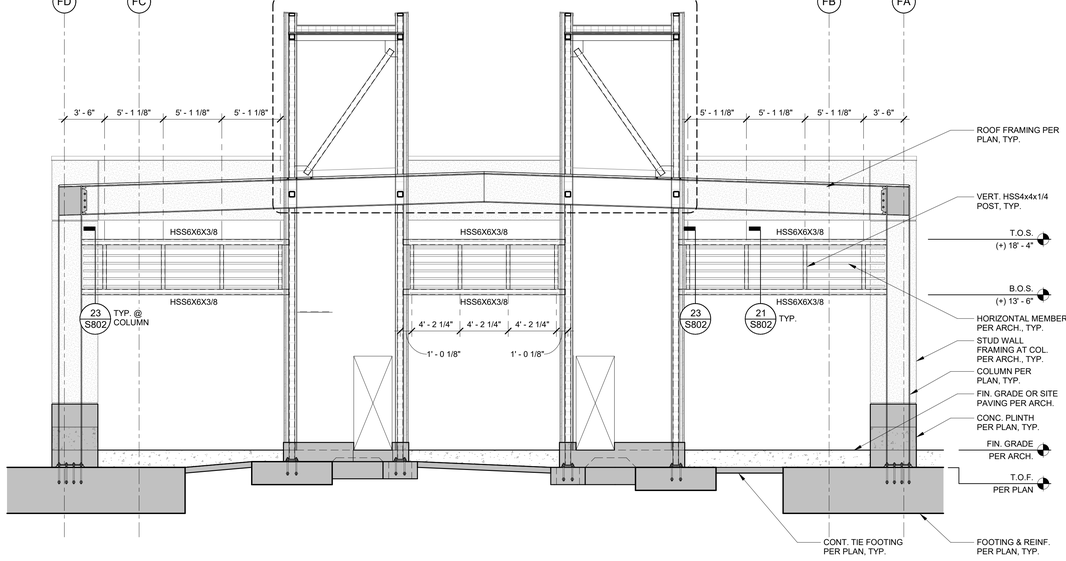

BUILDING F - VIERENDEEL TRUSS ELEVATION — 3/16" = 1'-0" — 19

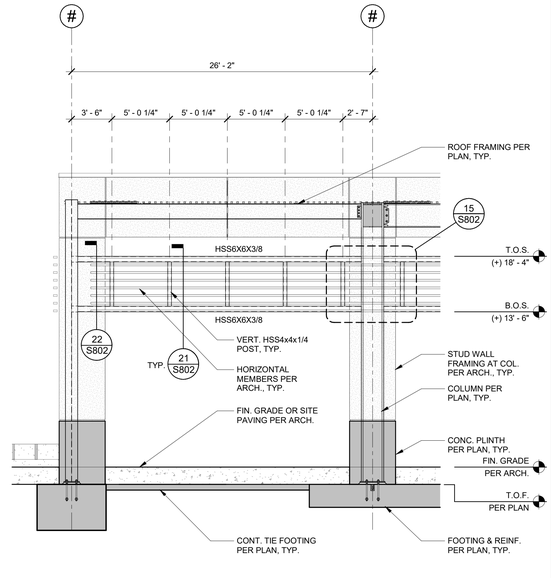

TYPICAL VIERENDEEL TRUSS ELEVATION (26' - 2" SPAN) — 3/16" = 1'-0" — 11

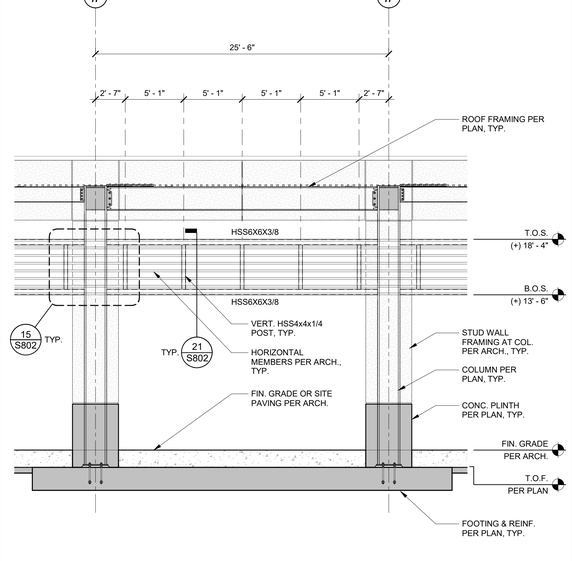

TYPICAL VIERENDEEL TRUSS ELEVATION (25' - 6" SPAN) — 3/16" = 1'-0" — 4

PLOT DATE: 10/31/2022 3:28:04 PM

\\tet-file1\Users\luis.valtierra\Documents\12032-S-COS Tulare CTE_luis.valtierra.rvt

FOR BID ONLY

Teter, LLP expressly reserves its common law copyright and other property rights in these plans. This document, the ideas and designs incorporated herein, as an instrument of professional service, is not to be used in whole or in part, for any other project without prior written authorization.

MARK	DATE	DESCRIPTION
	11/1/22	DSA BACKCHECK

REGISTERED PROFESSIONAL ENGINEER LUIS A. VALTIERRA No. 55609 STRUCTURAL STATE OF CALIFORNIA

TETER, LLP
FRESNO HEADQUARTERS
VISALIA | BAKERSFIELD | MODESTO | SAN LUIS OBISPO
ARCHITECTS ENGINEERS CONNECTED
TETER

TULARE CAMPUS CTE
COLLEGE OF THE SEQUOIAS
4999 E. BARDSLEY AVE.
TULARE, CA

DRAWING TITLE
MISCELLANEOUS FRAMING & DETAILS

PROJECT NO.
20-12032

DRAWING
S801

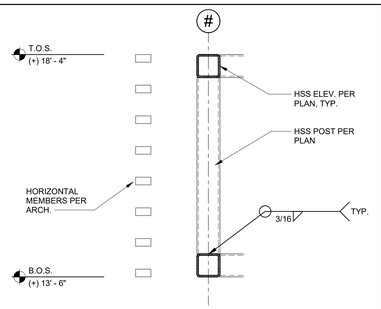

TRELLIS FRAMING SECTION 3/4" = 1'-0" 21

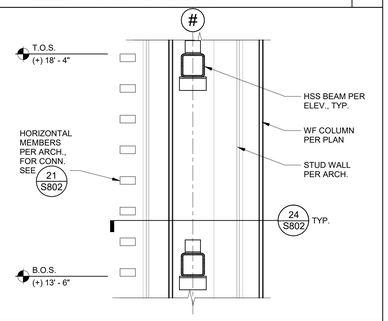

TRELLIS FRAMING SECTION 3/4" = 1'-0" 22

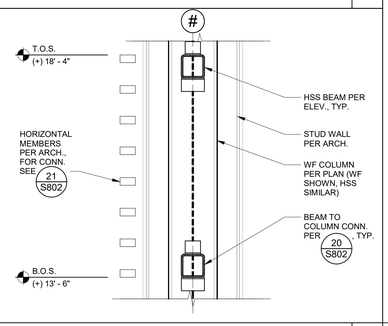

TRELLIS FRAMING SECTION 3/4" = 1'-0" 23

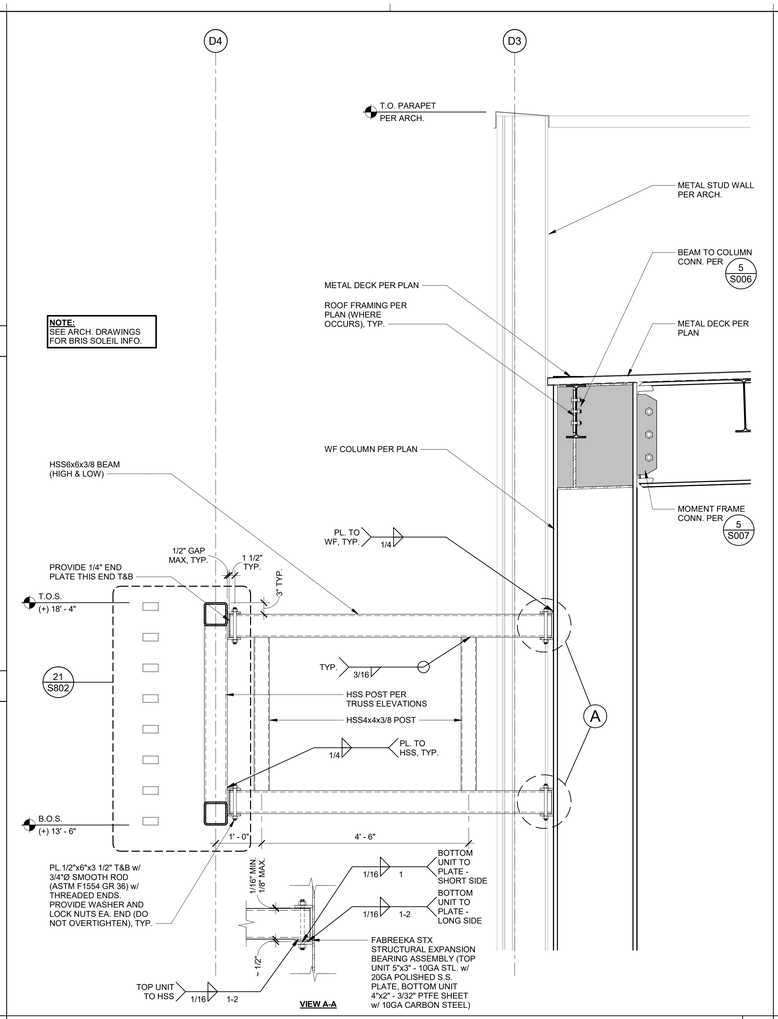

VIERENDEEL TRUSS SECTION 3/4" = 1'-0" 13

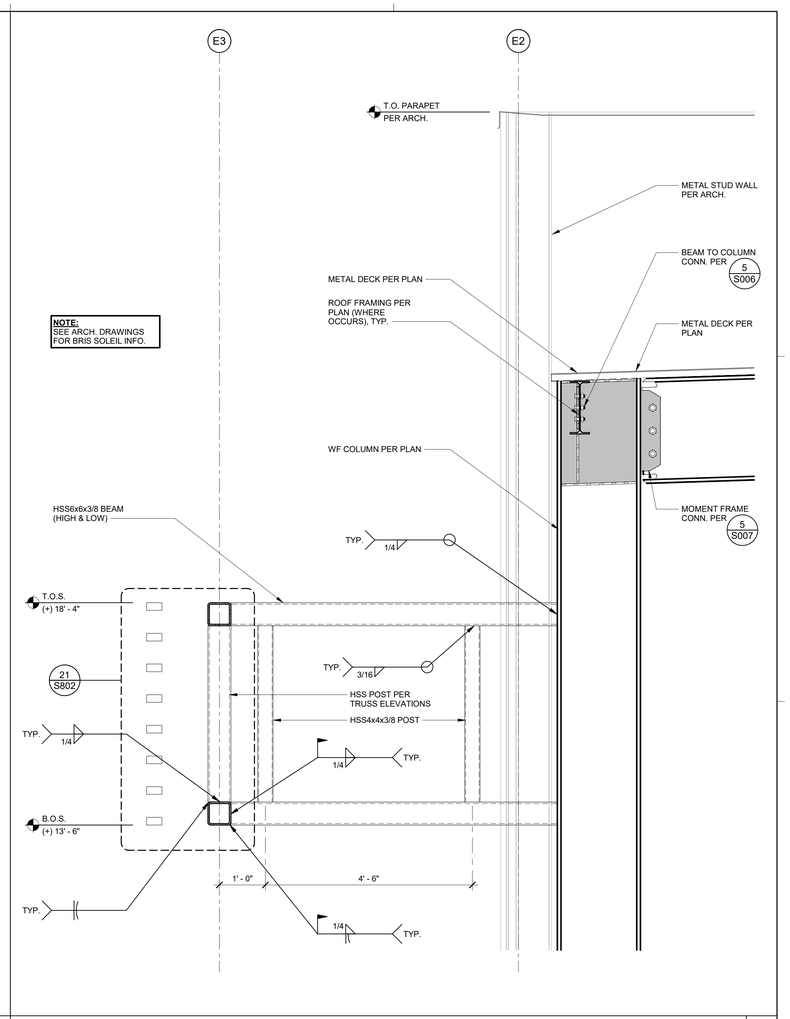

VIERENDEEL TRUSS SECTION 3/4" = 1'-0" 3

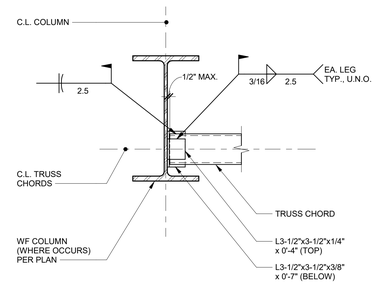

VIERENDEEL TRUSS DETAIL (PLAN) 1" = 1'-0" 24

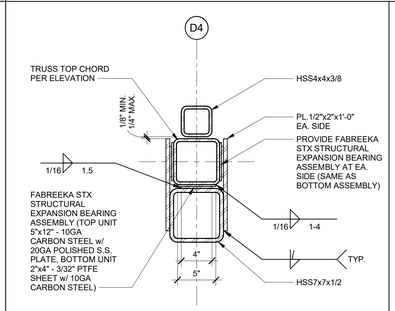

VIERENDEEL TRUSS DETAIL 1 1/2" = 1'-0" 19

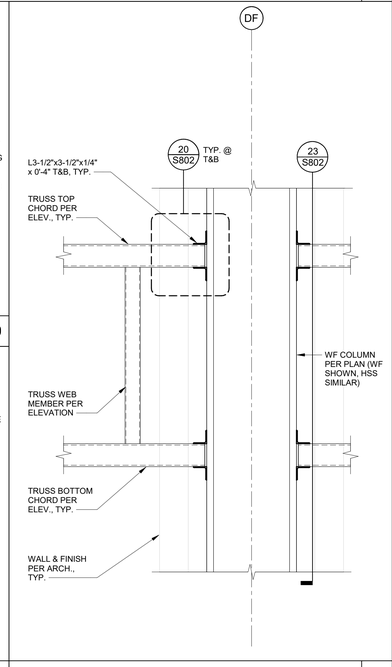

VIERENDEEL TRUSS DETAIL 3/4" = 1'-0" 15

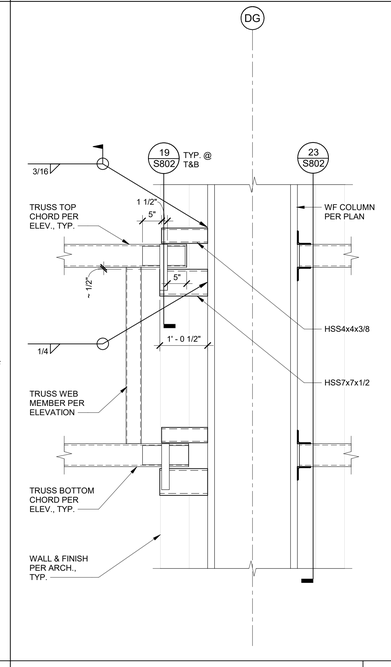

VIERENDEEL TRUSS DETAIL 3/4" = 1'-0" 10

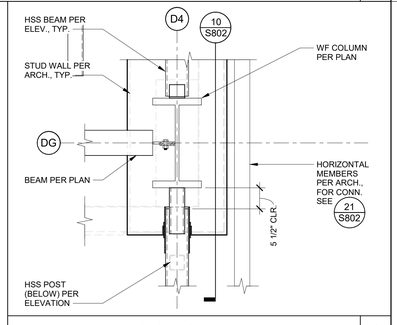

VIERENDEEL TRUSS DETAIL (PLAN) 3/4" = 1'-0" 4

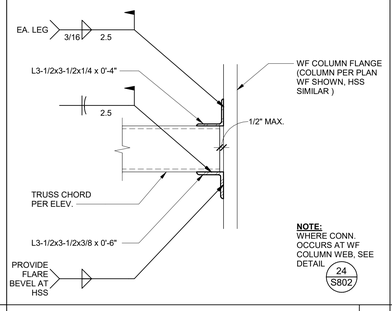

VIERENDEEL TRUSS DETAIL 1 1/2" = 1'-0" 20

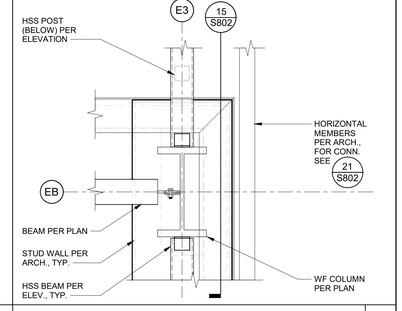

VIERENDEEL TRUSS DETAIL (PLAN) 3/4" = 1'-0" 5

PLOT DATE: 10/31/2022 3:28:11 PM

\\teter-file1\Users\luis.valtierra\Documents\120232-S-COS Tulare CTE_luis.valtierra.rvt

FOR BID ONLY

Teter, LLP expressly reserves its common law copyright and other property rights in these plans. This document, the ideas and designs incorporated herein, as an instrument of professional service, is not to be used in whole or part, for any other project without prior written authorization.

MARK	DATE	DESCRIPTION
	11/1/22	DSA BACKCHECK

REGISTERED PROFESSIONAL ENGINEER E. S. BAILEY No. 55609 STRUCTURAL STATE OF CALIFORNIA

TETER, LLP
FRESNO HEADQUARTERS
VISALIA | BAKERSFIELD | MODESTO | SAN LUIS OBISPO
ARCHITECTS ENGINEERS CONNECTED

TULARE CAMPUS CTE
COLLEGE OF THE SEQUOIAS
4999 E. BARDSLEY AVE.
TULARE, CA

DRAWING TITLE
MISCELLANEOUS FRAMING & DETAILS

PROJECT NO.
20-12032

DRAWING
S802

\\tet-file1\Users\luis.valtierra\Documents\12032-S-COS Tulare CTE_luis.valtierra.rvt

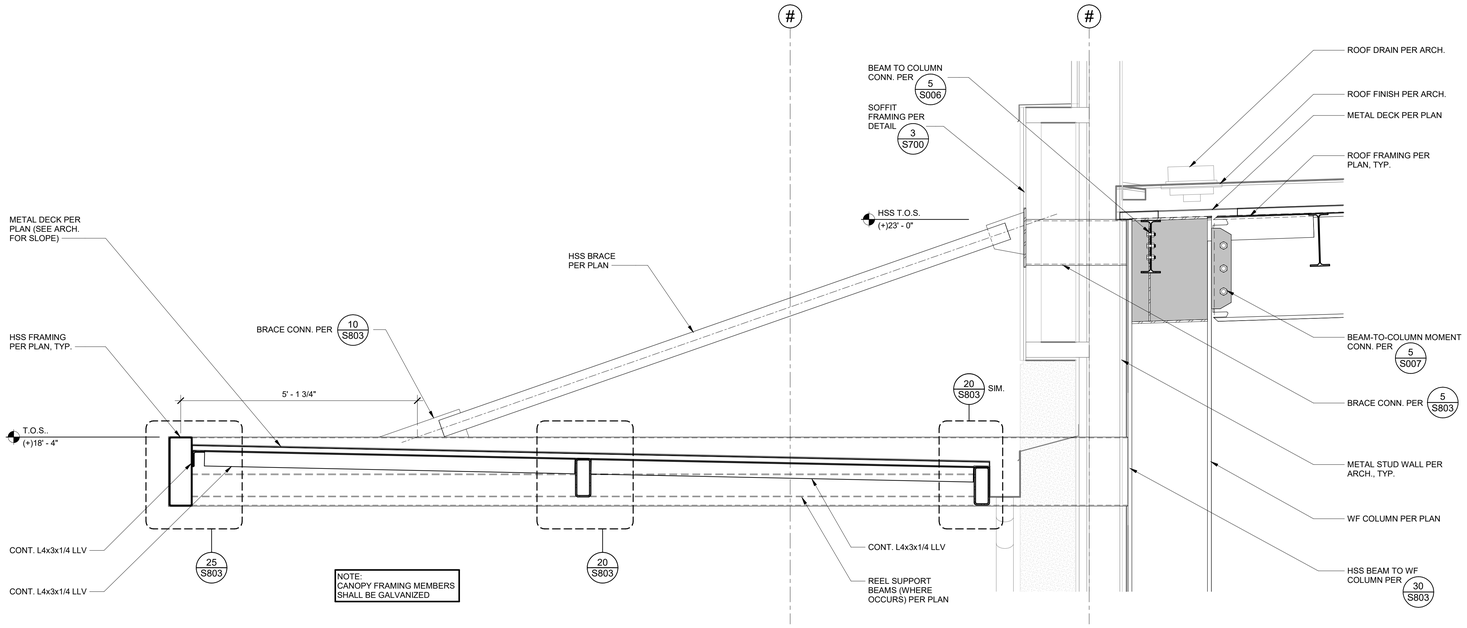

CANOPY FRAMING SECTION — 3/4" = 1'-0" — 12

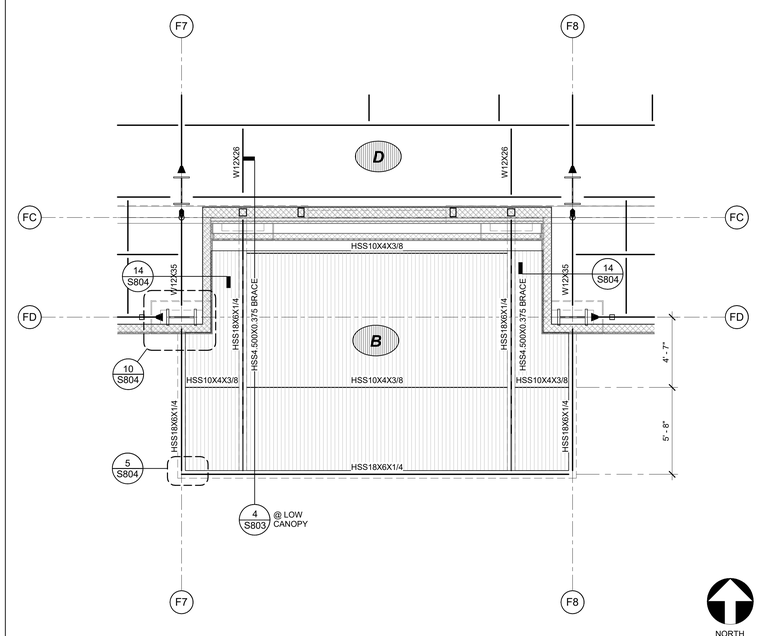

ENLARGED ROOF FRAMING PLAN - BUILDING F CANOPY — 1/4" = 1'-0" — 2

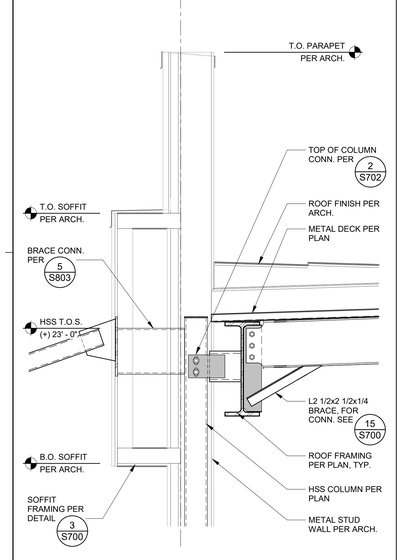

CANOPY BRACE CONN. — 3/4" = 1'-0" — 29

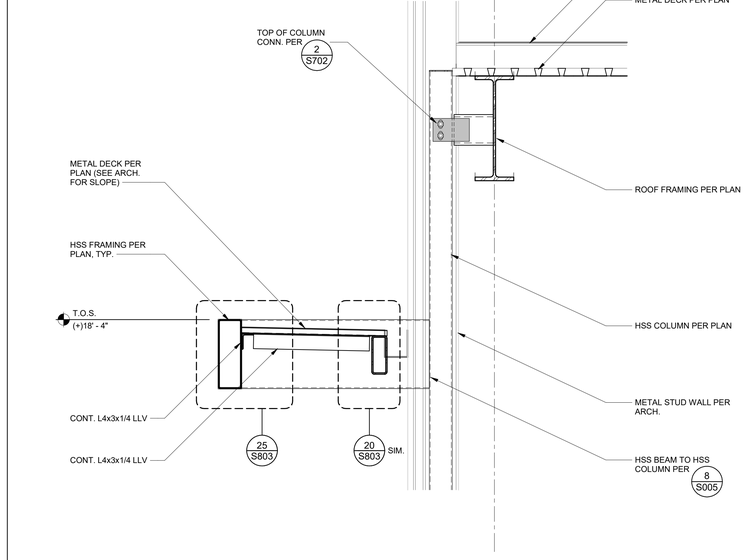

CANOPY FRAMING SECTION — 3/4" = 1'-0" — 19

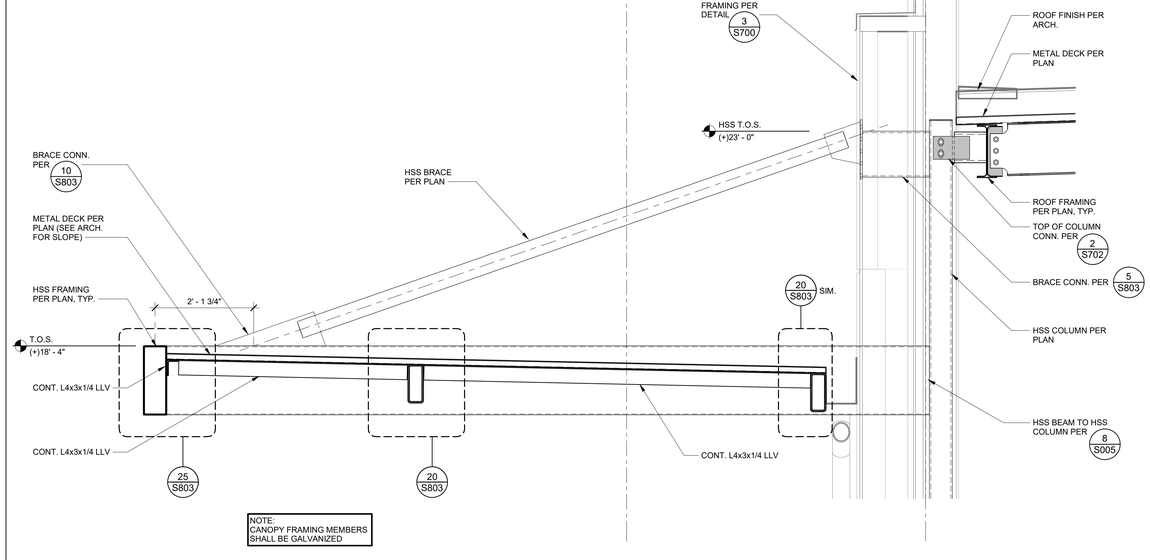

CANOPY FRAMING SECTION — 3/4" = 1'-0" — 4

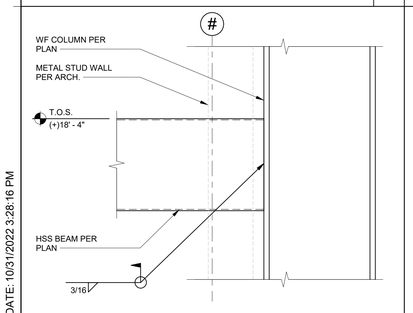

CANOPY DETAIL — 1" = 1'-0" — 30

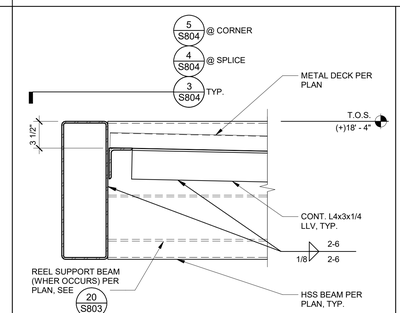

CANOPY DETAIL — 1 1/2" = 1'-0" — 25

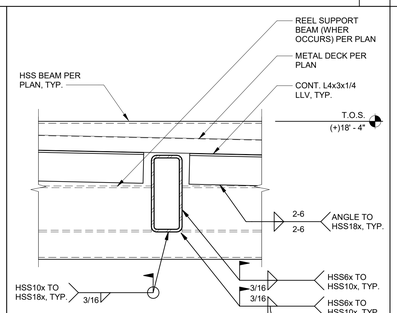

CANOPY DETAIL — 1 1/2" = 1'-0" — 20

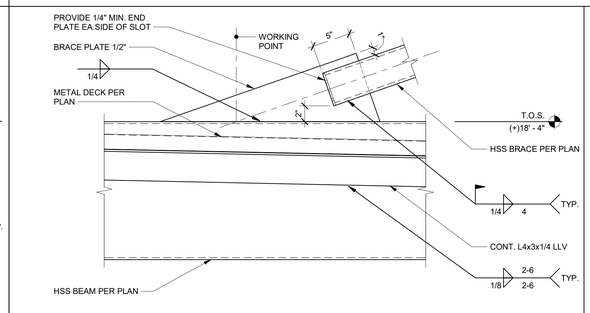

CANOPY BRACE CONN. (SIDE VIEW) — 1 1/2" = 1'-0" — 10

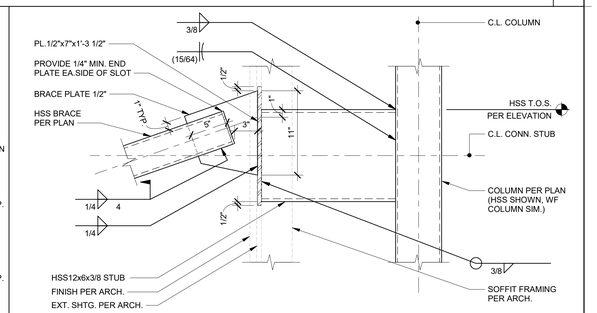

CANOPY BRACE CONN. (SIDE VIEW) — 1 1/2" = 1'-0" — 5

PLOT DATE: 10/31/2022 3:28:16 PM

FOR BID ONLY

Teter, LLP expressly reserves its common law copyright and other property rights in these plans. This document, the ideas and designs incorporated herein, as an instrument of professional service, is not to be used in whole or part, for any other project without prior written authorization.

MARK	DATE	DESCRIPTION
	11/1/22	DSA BACKCHECK

REGISTERED PROFESSIONAL ENGINEER EMILY S. BAILEY No. 55609 STRUCTURAL STATE OF CALIFORNIA

TETER, LLP
ARCHITECTS ENGINEERS CONNECTED
FRESNO HEADQUARTERS
VISALIA | BAKERSFIELD | MODESTO | SAN LUIS OBISPO

TETER

TULARE CAMPUS CTE
COLLEGE OF THE SEQUOIAS
4999 E. BARDSLEY AVE.
TULARE, CA

DRAWING TITLE
MISCELLANEOUS FRAMING & DETAILS

PROJECT NO.
20-12032

DRAWING
S803

\\tet-file1\Users\luis.valtierra\Documents\12032-S-COS Tulare CTE_luis.valtierra.rvt

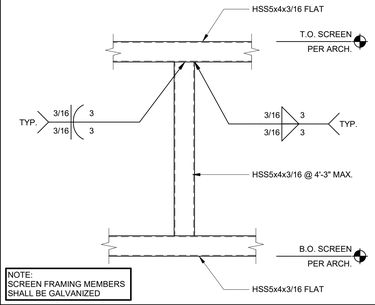

MECH. SCREEN DETAIL 1" = 1'-0" | 21

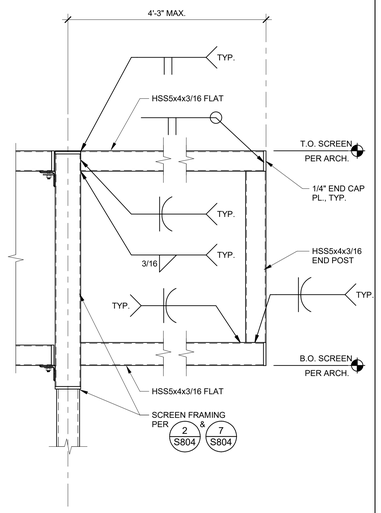

MECH. SCREEN DETAIL 1" = 1'-0" | 17

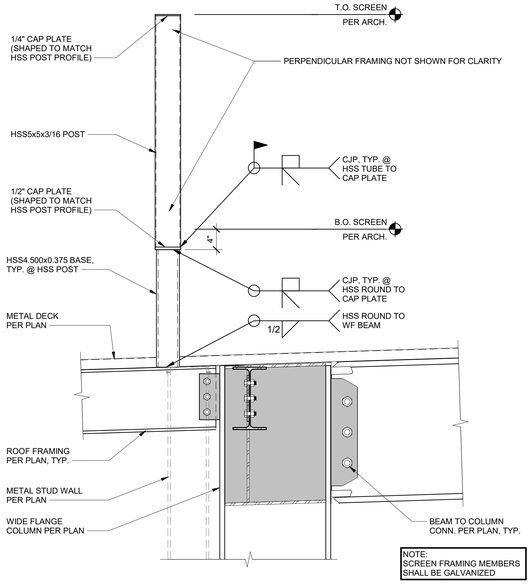

MECH. SCREEN DETAIL 1" = 1'-0" | 7

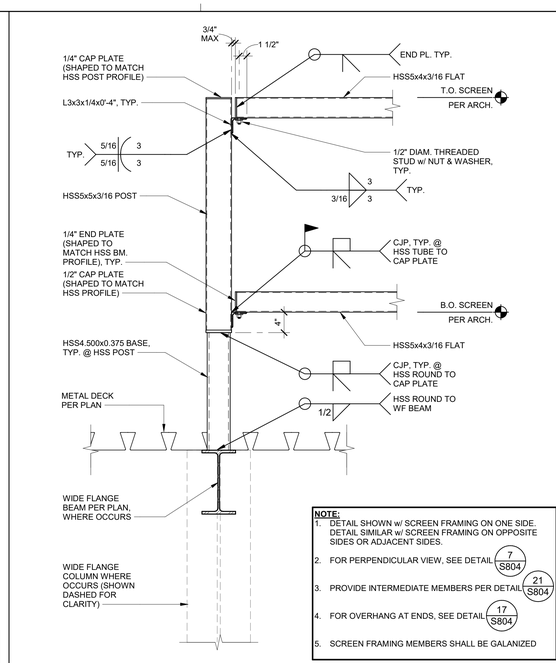

MECH. SCREEN DETAIL 1" = 1'-0" | 2

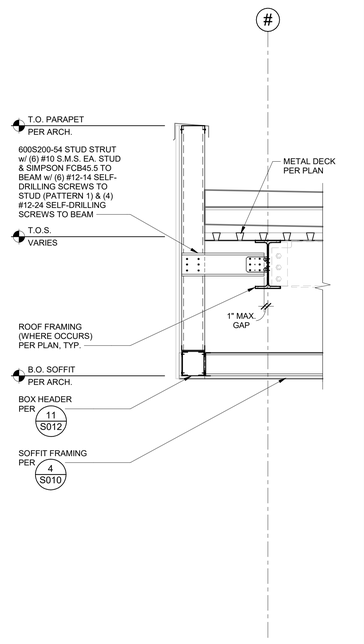

CANOPY FRAMING SECTION 3/4" = 1'-0" | 14

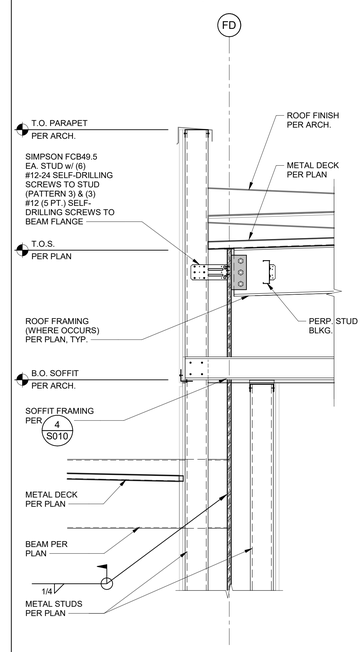

CANOPY FRAMING SECTION 3/4" = 1'-0" | 9

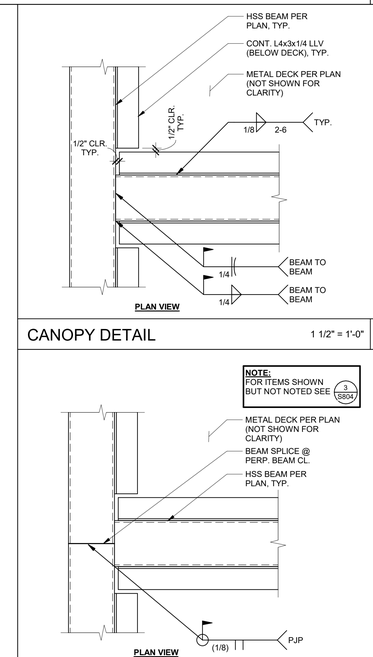

CANOPY DETAIL 1 1/2" = 1'-0" | 3

CANOPY DETAIL 1 1/2" = 1'-0" | 4

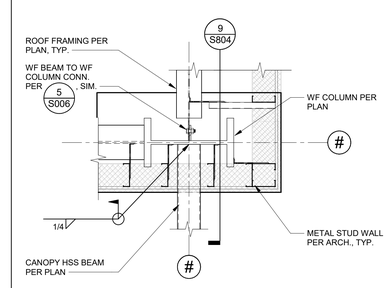

WF TO BEAM CONN. 3/4" = 1'-0" | 10

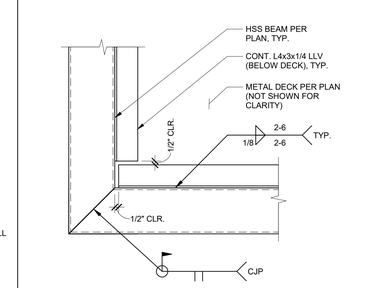

CANOPY DETAIL 1 1/2" = 1'-0" | 5

FOR BID ONLY

Teter, LLP expressly reserves its common law copyright and other property rights in these plans. This document, the ideas and designs incorporated herein, as an instrument of professional service, is not to be used in whole or part, for any other project without prior written authorization.

MARK	DATE	DESCRIPTION
	11/1/22	DSA BACKCHECK

REGISTERED PROFESSIONAL ENGINEER LUIS S. BALTIERRA No. 55409 STRUCTURAL STATE OF CALIFORNIA

TETER, LLP
ARCHITECTS ENGINEERS CONNECTED
FRESNO HEADQUARTERS
VISALIA | BAKERSFIELD | MODESTO | SAN LUIS OBISPO

TETER

TULARE CAMPUS CTE
COLLEGE OF THE SEQUOIAS
4999 E. BARDSLEY AVE.
TULARE, CA

DRAWING TITLE
MISCELLANEOUS FRAMING & DETAILS

PROJECT NO.
20-12032

DRAWING
S804

PLOT DATE: 10/31/2022 3:28:21 PM

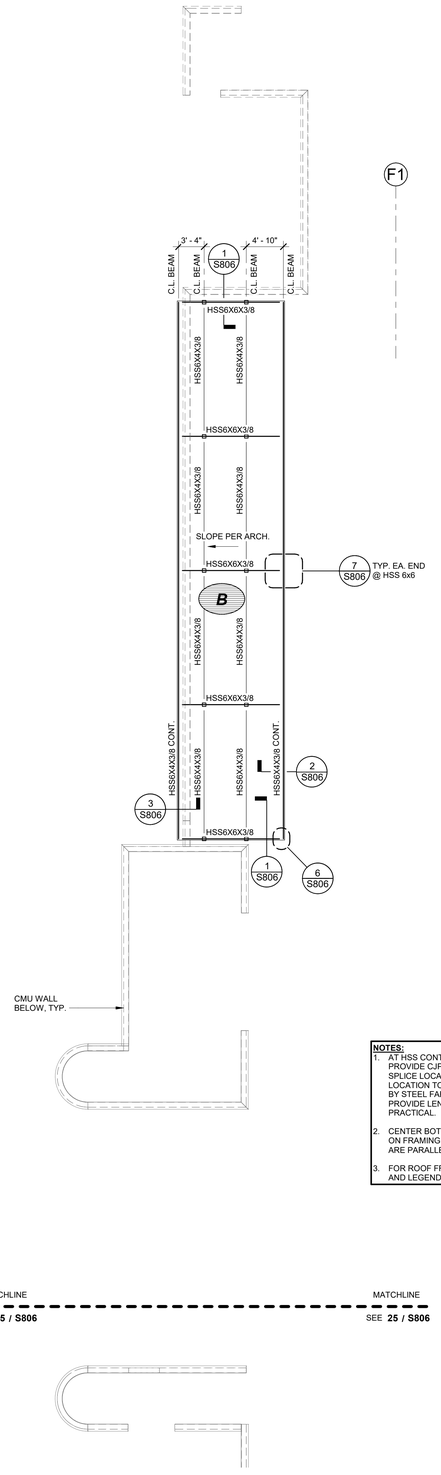

NOTES:
1. AT HSS CONT. EDGE MEMBER PROVIDE CJP BEVEL WELD AT SPLICE LOCATIONS. LENGTHS & LOCATION TO BE DETERMINED BY STEEL FABRICATOR. PROVIDE LENGTHS AS LONG AS PRACTICAL.
2. CENTER BOTTOM DECK FLUTES ON FRAMING MEMBERS THAT ARE PARALLEL TO FLUTES.
3. FOR ROOF FRAMING NOTES AND LEGEND SEE S320.

MATCHLINE
SEE **25 / S806**

MATCHLINE
SEE **25 / S806**

NORTH

ROOF FRAMING PLAN - WEST SITE ENTRY 1/8" = 1'-0" 25

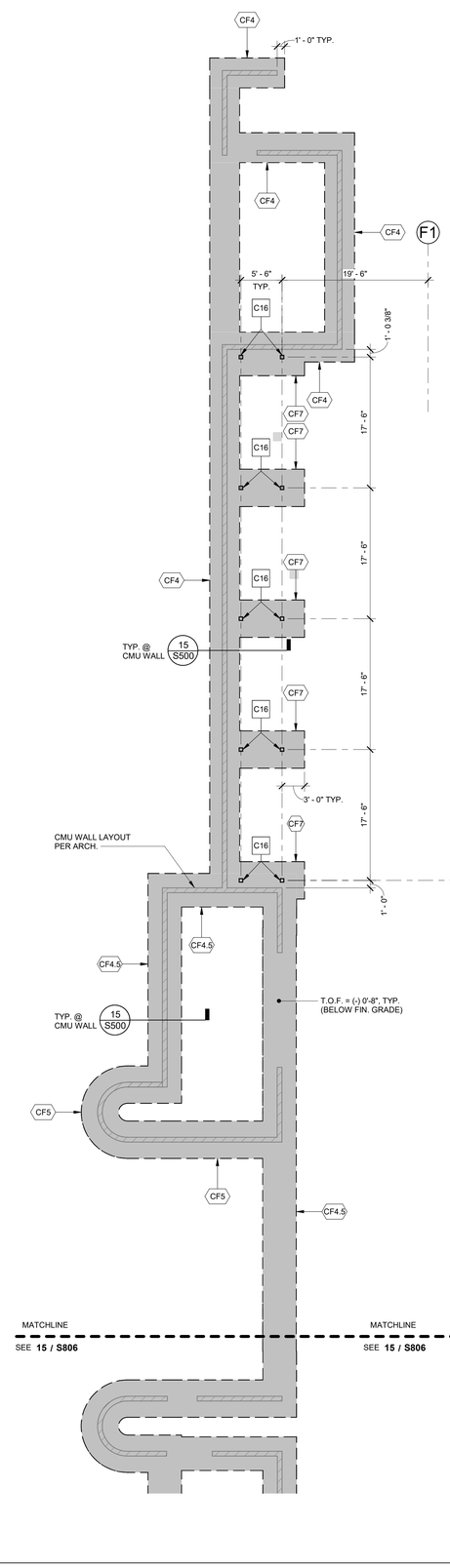

NOTE:
1. REFER TO FOUNDATION SHEETS FOR COLUMN & FOOTING SCHEDULE ON S100.
2. FOR FOUNDATION NOTES AND LEGEND SEE S120.

MATCHLINE
SEE **15 / S806**

MATCHLINE
SEE **15 / S806**

NORTH

FOUNDATION PLAN - WEST SITE ENTRY 1/8" = 1'-0" 15

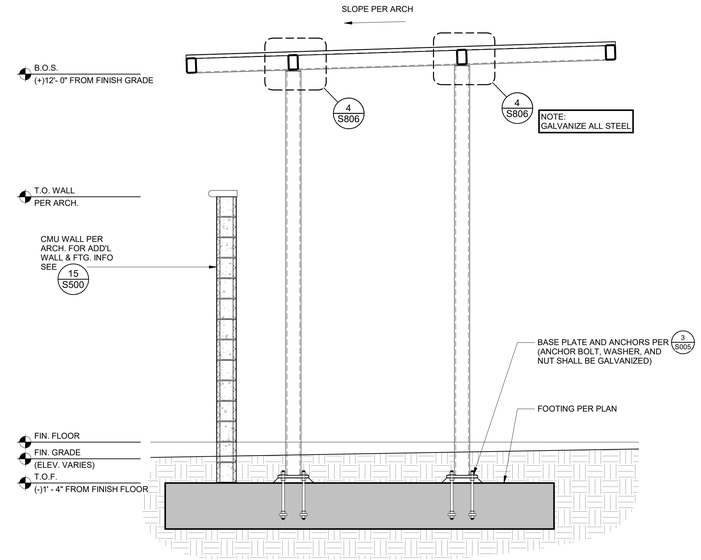

CANOPY SECTION - WEST SITE ENTRY 1/2" = 1'-0" 2

\\tet-file1\Users\luis.valtierra\Documents\12032-S-COS Tulare CTE_luis.valtierra.rvt

PLOT DATE: 10/31/2022 3:28:24 PM

Teter, LLP expressly reserves its common law copyright and other property rights in these plans. This document, the ideas and designs incorporated herein, as an instrument of professional service, is not to be used in whole or part, for any other project without prior written authorization.

FOR BID ONLY

MARK	DATE	DESCRIPTION
	11/1/22	DSA BACKCHECK

REGISTERED PROFESSIONAL ENGINEER LUIS S. BALTIERRA No. 55609 STRUCTURAL STATE OF CALIFORNIA

TETER, LLP
FRESNO HEADQUARTERS
VISALIA I BAKERSFIELD I MODESTO I SAN LUIS OBISPO
ARCHITECTS ENGINEERS CONNECTED

TETER

TULARE CAMPUS CTE
COLLEGE OF THE SEQUOIAS
4999 E. BARDSLEY AVE.
TULARE, CA

DRAWING TITLE
MISCELLANEOUS FRAMING & DETAILS

PROJECT NO.
20-12032

DRAWING
S805

\\tet-file1\Users\luis.valtierra\Documents\12032-S-COS Tulare CTE_luis.valtierra.rvt

NOTE:
1. AT HSS CONT. EDGE MEMBER PROVIDE CJP BEVEL WELD AT SPLICE LOCATIONS. LENGTHS & LOCATION TO BE DETERMINED BY STEEL FABRICATOR, PROVIDE LENGTHS AS LONG AS PRACTICAL.
2. CENTER BOTTOM DECK FLUTES ON FRAMING MEMBERS THAT ARE PARALLEL TO FLUTES.
3. FOR ROOF FRAMING NOTES AND LEGEND SEE S320.

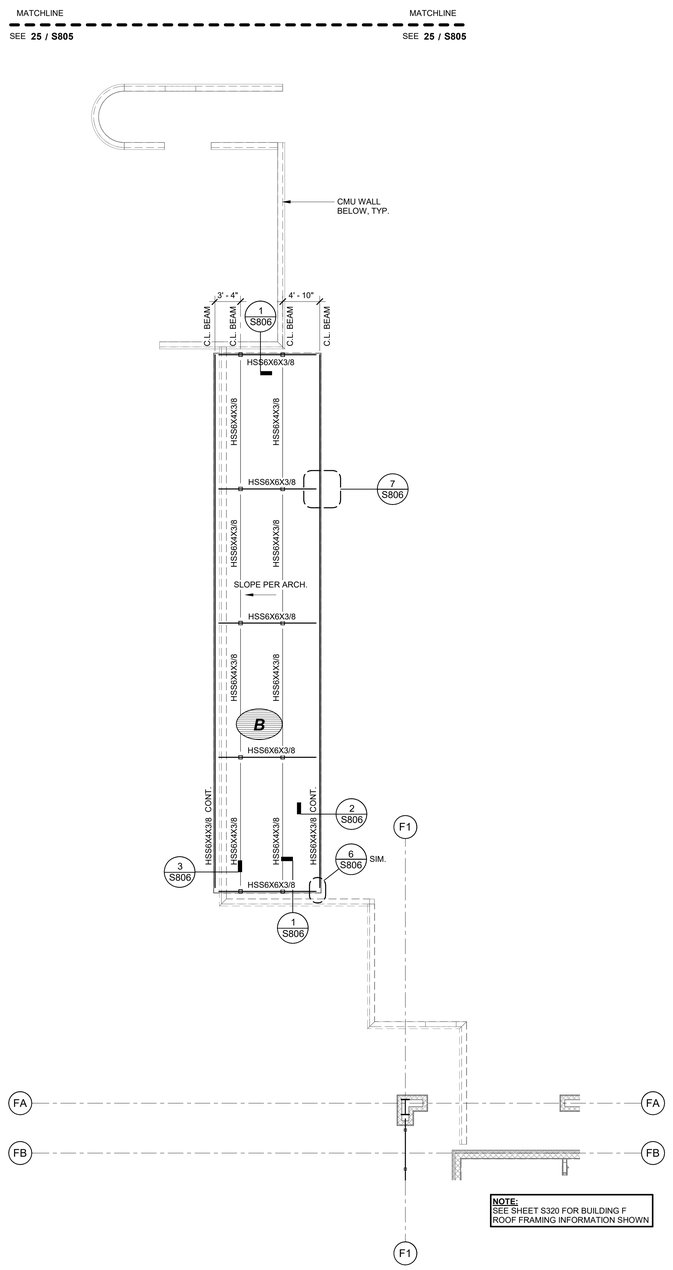

ROOF FRAMING PLAN - FRONT ENTRY 1/8" = 1'-0" 25

NOTE:
1. REFER TO FOUNDATION SHEETS FOR COLUMN & FOOTING SCHEDULE ON S100.
2. FOR FOUNDATION NOTES AND LEGEND SEE S120.

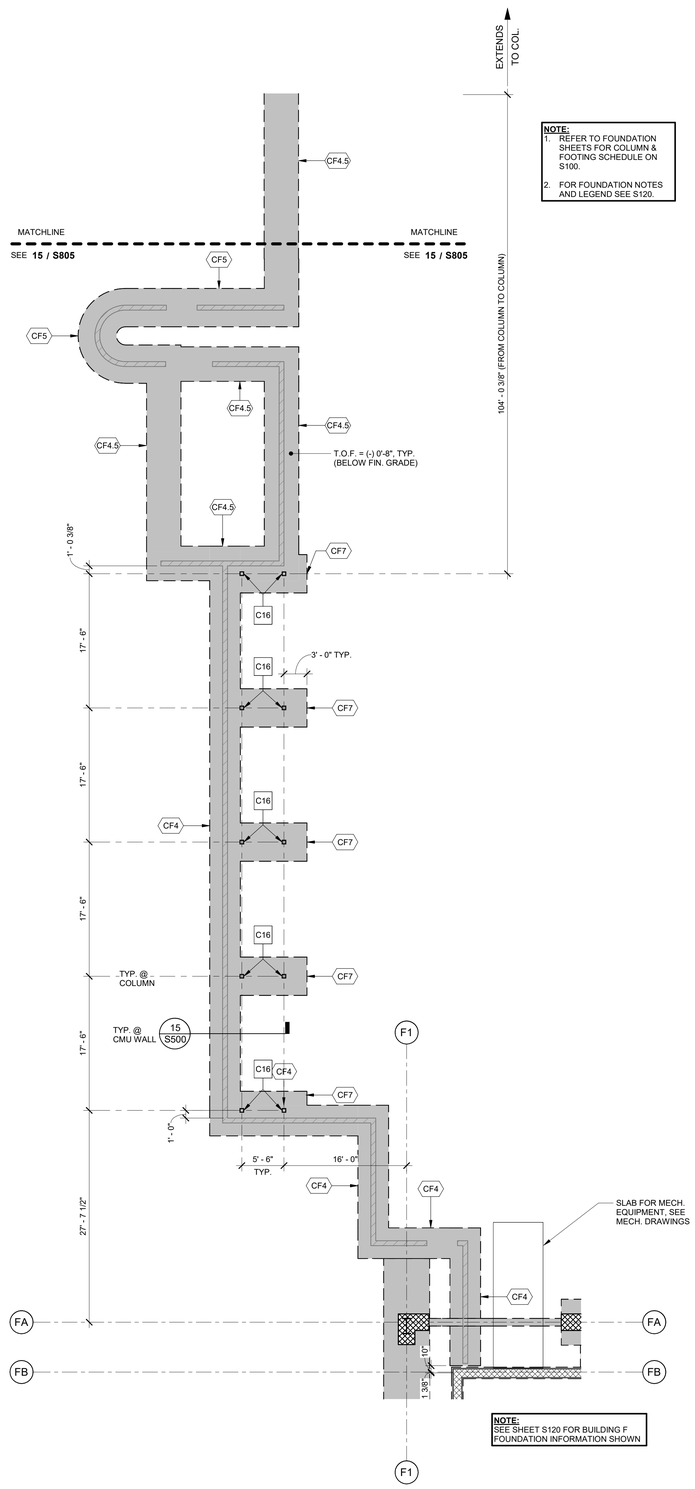

FOUNDATION PLAN - FRONT ENTRY 1/8" = 1'-0" 15

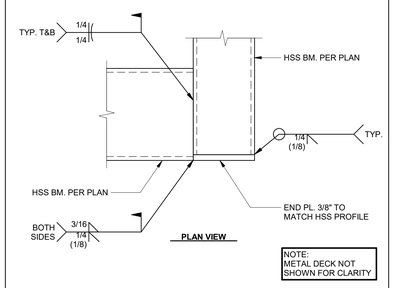

CORNER 3" = 1'-0" 6

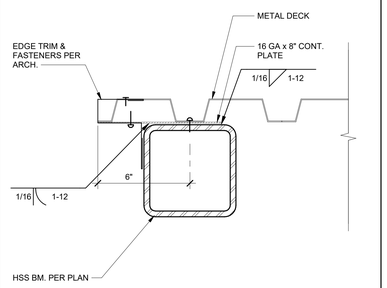

DETAIL 3" = 1'-0" 1

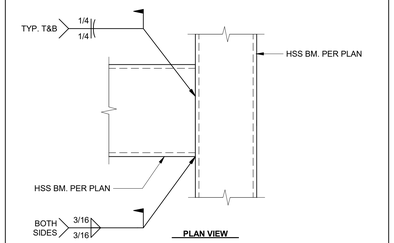

TYP. BEAM TO BEAM 3" = 1'-0" 7

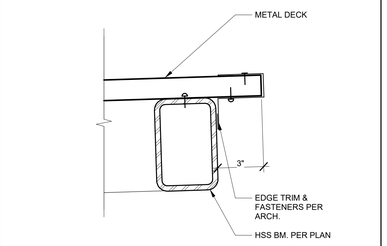

DETAIL 3" = 1'-0" 2

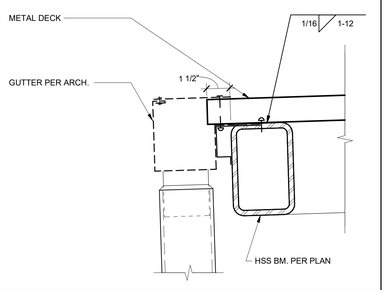

DETAIL 3" = 1'-0" 3

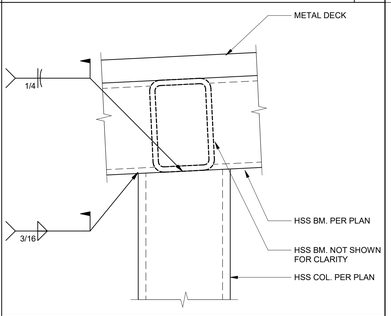

COLUMN CONNECTION 3" = 1'-0" 4

KEYPLAN

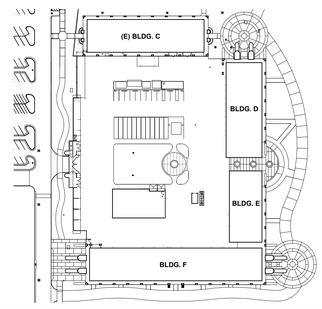

FOR BID ONLY

Teter, LLP expressly reserves its common law copyright and other property rights in these plans. This document, the ideas and designs incorporated herein, as an instrument of professional service, is not to be used in whole or in part, for any other project without prior written authorization.

MARK	DATE	DESCRIPTION
	11/1/22	DSA BACKCHECK

REGISTERED PROFESSIONAL ENGINEER STRUCTURAL STATE OF CALIFORNIA LUIS S. BALTIERRA No. 55659

TETER, LLP
FRESNO HEADQUARTERS
VISALIA | BAKERSFIELD | MODESTO | SAN LUIS OBISPO
ARCHITECTS ENGINEERS CONNECTED

TETER

TULARE CAMPUS CTE
COLLEGE OF THE SEQUOIAS
4999 E. BARDSLEY AVE.
TULARE, CA

DRAWING TITLE
MISCELLANEOUS FRAMING & DETAILS

PROJECT NO.
20-12032

DRAWING
S806

PLOT DATE: 10/31/2022 3:28:29 PM

\\tet-file1\Users\luis.valtierra\Documents\12032-S-COS Tulare CTE_luis.valtierra.rvt

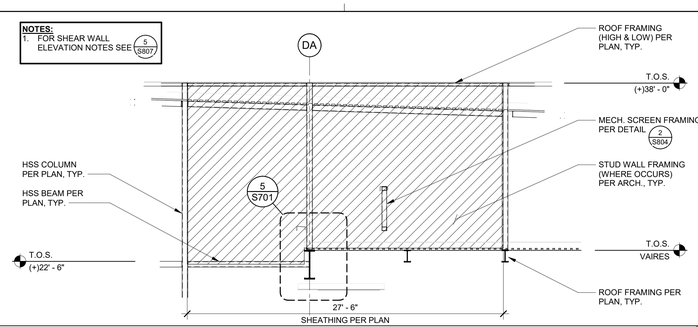

SHEAR WALL ELEVATION (LOOKING EAST) - BUILDING D | 3/16" = 1'-0" | 21

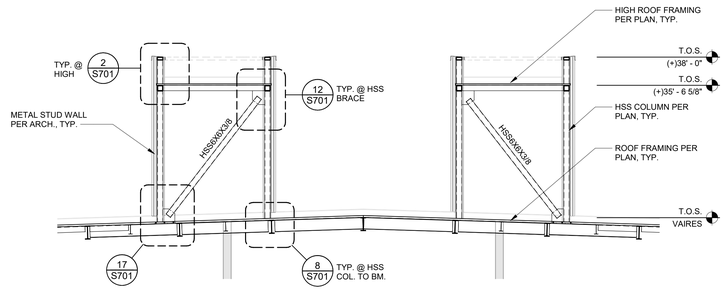

BRACE FRAME ELEVATION (LOOKING NORTH) - BUILDING D | 3/16" = 1'-0" | 11

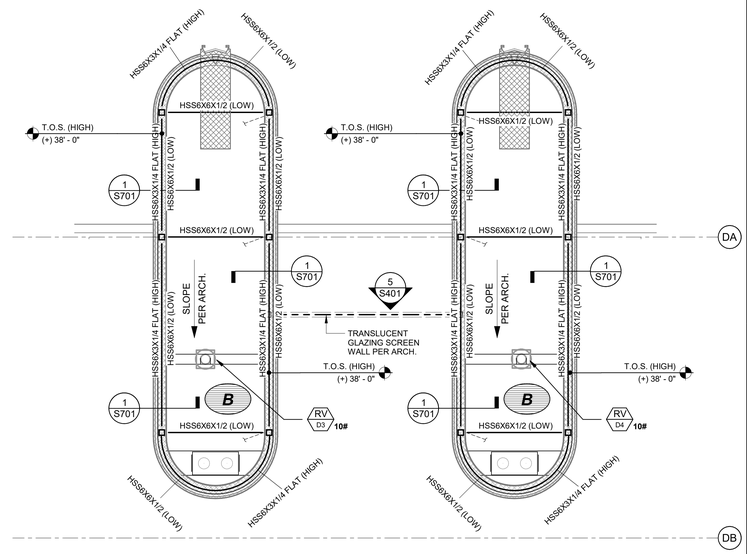

HIGH ROOF FRAMING PLAN - BUILDING D | 3/16" = 1'-0" | 2

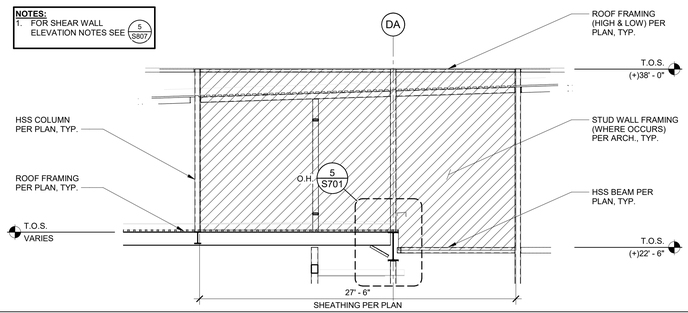

SHEAR WALL ELEVATION (LOOKING WEST) - BUILDING D | 3/16" = 1'-0" | 22

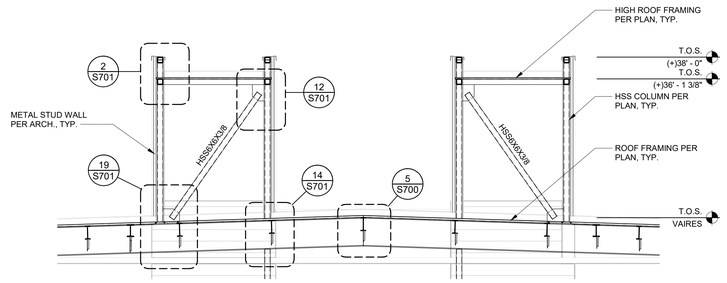

BRACE FRAME ELEVATION (LOOKING NORTH) - BUILDING D | 3/16" = 1'-0" | 12

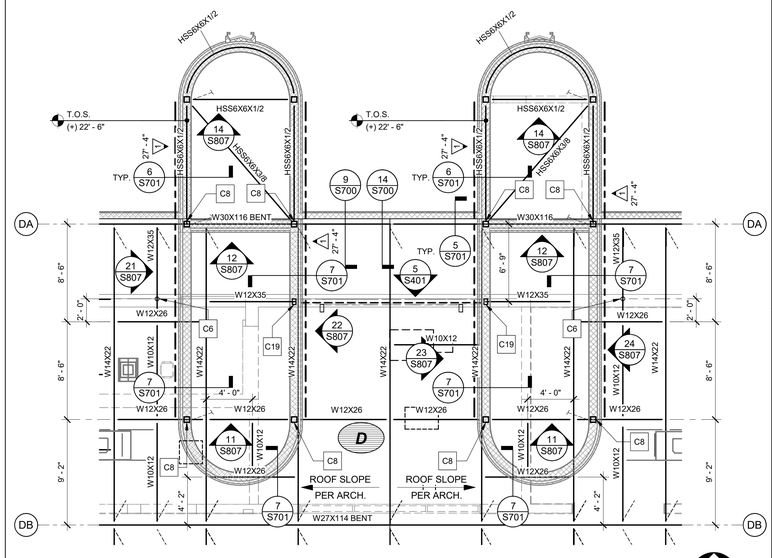

ROOF FRAMING PLAN - BUILDING D | 3/16" = 1'-0" | 4

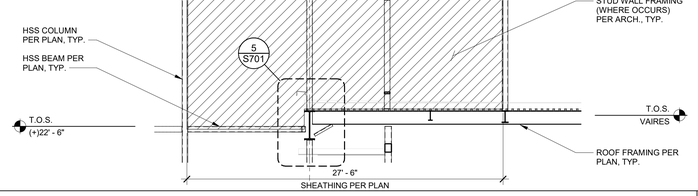

SHEAR WALL ELEVATION - BUILDING D | 3/16" = 1'-0" | 23

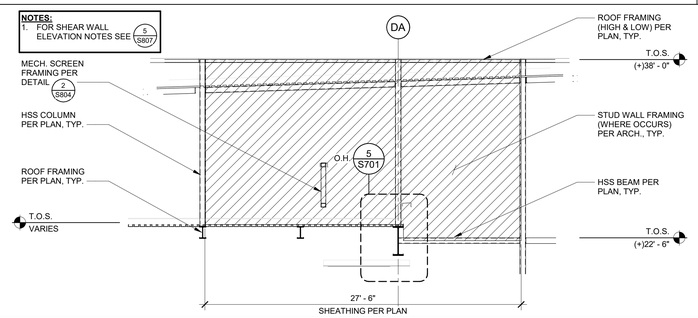

SHEAR WALL ELEVATION - BUILDING D | 3/16" = 1'-0" | 24

BRACE FRAME ELEVATION (LOOKING NORTH) - BUILDING D | 3/16" = 1'-0" | 14

SHEAR WALL ELEVATION NOTES

1. THE INTENT OF THE WALL ELEVATION IS TO INDICATE DETAILS AND/OR MEMBER SIZES THAT DO NOT APPEAR ON PLAN AND TO REPRESENT THE EXTENT OF THE SHEAR WALL SHEATHING (WHERE OCCURS PER PLAN).
2. TYPICAL STUD WALL FRAMING IS NOT SHOWN FOR CLARITY. REFER TO ARCHITECTURAL DRAWINGS AND TYPICAL DETAIL 4 S010
3. U.N.O., ALL STUD WALL FRAMING SHALL BE SHEATHED USING TYPE A SHEATHING PER DETIAL 1 S011
4. FOR STRUCTURAL STEEL FRAME SIZES AND DETAILS NOT SHOWN, SEE FOUNDATION AND FRAMING PLANS.
5. HSS COLUMNS ARE FULL HEIGHT TO THE HIGHEST POINT AS APPLICAPLE (T.O. PARAPET, T.O. WALL TRACK, ETC.) UNLESS INTERRUPTED BY INTERMEDIATE MEMBER, AS DETAILED.
6. FOR HSS-TO-HSS CONNECTIONS, SEE DETAIL 5 S702
7. U.N.O., ALL TYPICAL BEAM-TO-BEAM AND BEAM-TO-COLUMN CONNECTIONS SHALL BE PER 5 S006

SHEAR WALL ELEVATION NOTES | N.T.S. | 5

PLOT DATE: 10/31/2022 3:28:38 PM

FOR BID ONLY

Teter, LLP expressly reserves its common law copyright and other property rights in these plans. This document, the ideas and designs incorporated herein, as an instrument of professional service, is not to be used in whole or in part, for any other project without prior written authorization.

MARK	DATE	DESCRIPTION
	11/1/22	DSA BACKCHECK

REGISTERED PROFESSIONAL ENGINEER LUIS S. BALTIERRA No. 55659 STRUCTURAL STATE OF CALIFORNIA

TETER, LLP
ARCHITECTS ENGINEERS CONNECTED
FRESNO HEADQUARTERS
VISALIA | BAKERSFIELD | MODESTO | SAN LUIS OBISPO

TETER

TULARE CAMPUS CTE
COLLEGE OF THE SEQUOIAS
4999 E. BARDSLEY AVE.
TULARE, CA

DRAWING TITLE
MISCELLANEOUS FRAMING & DETAILS

PROJECT NO.
20-12032

DRAWING
S807

\\tet-file1\Users\luis.valtierra\Documents\12032-S-COS Tulare CTE_luis.valtierra.rvt

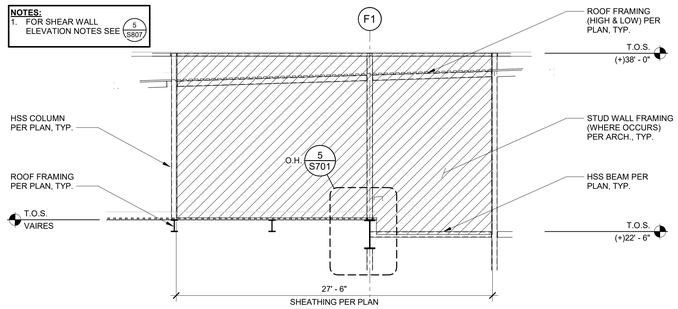

SHEAR WALL ELEVATION (LOOKING SOUTH) - BUILDING F | 3/16" = 1'-0" | 21

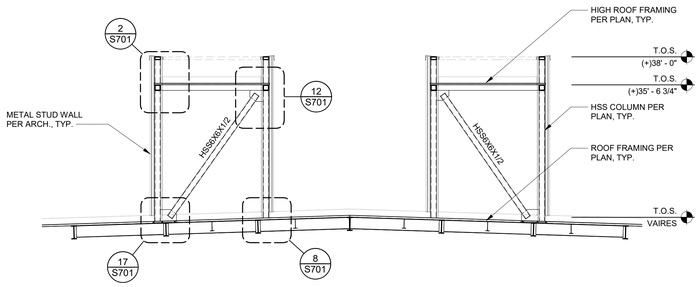

BRACE FRAME ELEVATION (LOOKING WEST) - BUILDING F | 3/16" = 1'-0" | 11

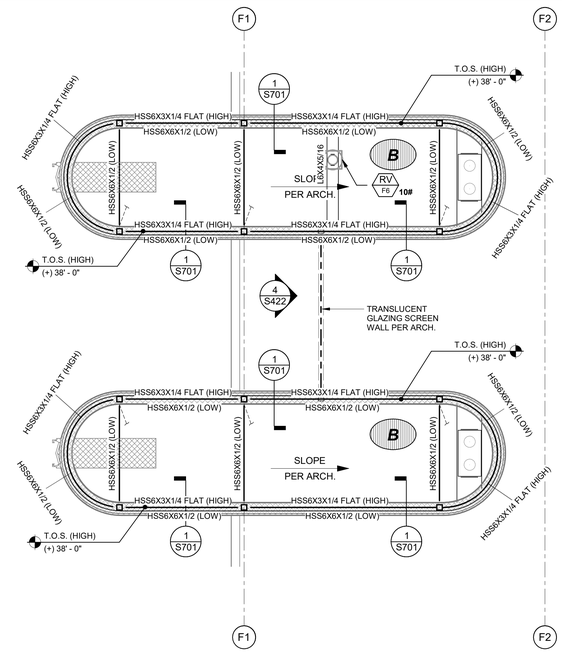

HIGH ROOF FRAMING PLAN - BUILDING F | 3/16" = 1'-0" | 2

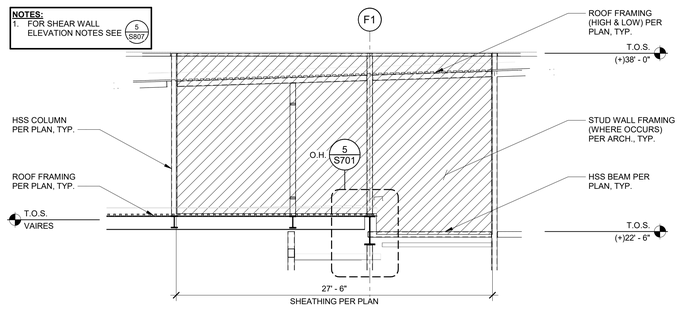

SHEAR WALL ELEVATION (LOOKING SOUTH) - BUILDING F | 3/16" = 1'-0" | 23

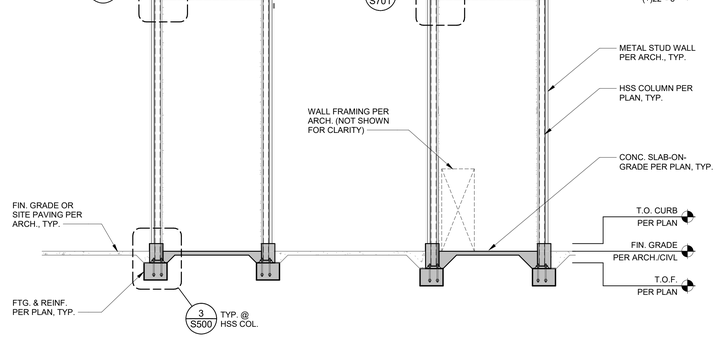

BRACE FRAME ELEVATION (LOOKING WEST) - BUILDING F | 3/16" = 1'-0" | 14

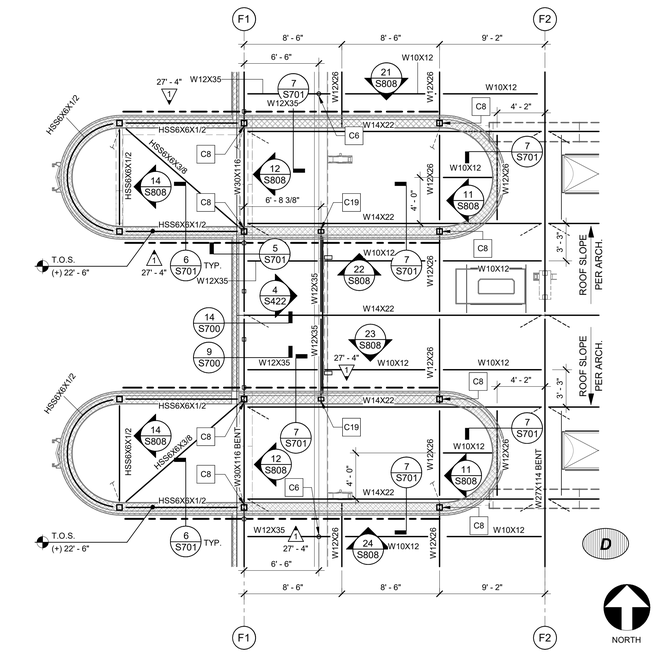

ROOF FRAMING PLAN - BUILDING F | 3/16" = 1'-0" | 4

PLOT DATE: 10/31/2022 3:28:47 PM

Teter, LLP expressly reserves its common law copyright and other property rights in these plans. This document, the ideas and designs incorporated herein, as an instrument of professional service, is not to be used in whole or in part, for any other project without prior written authorization.

FOR BID ONLY

MARK	DATE	DESCRIPTION
	11/1/22	DSA BACKCHECK

TETER, LLP
FRESNO HEADQUARTERS
VISALIA | BAKERSFIELD | MODESTO | SAN LUIS OBISPO
ARCHITECTS ENGINEERS CONNECTED

TULARE CAMPUS CTE
COLLEGE OF THE SEQUOIAS
4999 E. BARDSLEY AVE.
TULARE, CA

DRAWING TITLE
MISCELLANEOUS FRAMING & DETAILS

PROJECT NO.
20-12032

DRAWING
S808

\\tet-file1\Users\luis.valtierra\Documents\12032-S-COS Tulare CTE_luis.valtierra.rvt

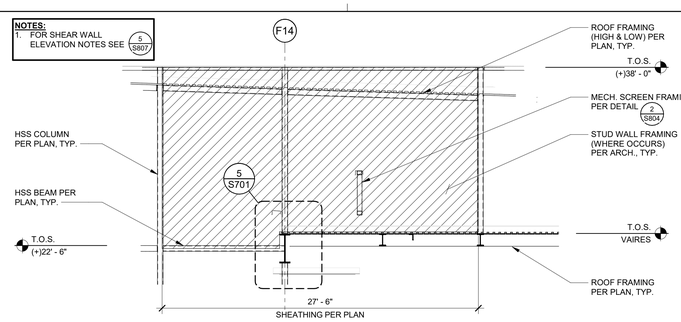

SHEAR WALL ELEVATION (LOOKING SOUTH) - BUILDING F | 3/16" = 1'-0" | 21

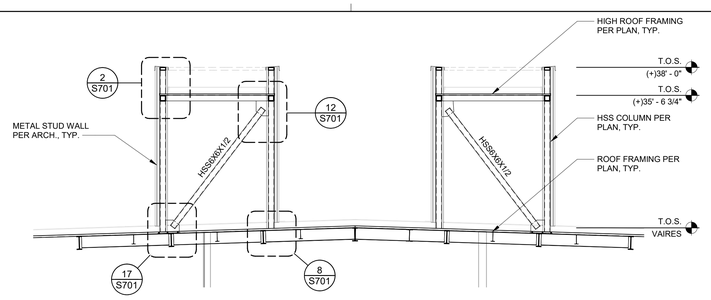

BRACE FRAME ELEVATION (LOOKING EAST) - BUILDING F | 3/16" = 1'-0" | 11

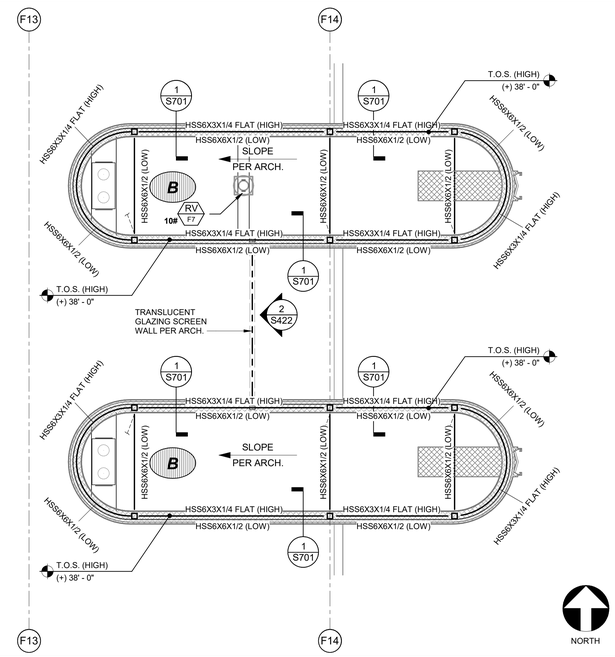

HIGH ROOF FRAMING PLAN - BUILDING F | 3/16" = 1'-0" | 2

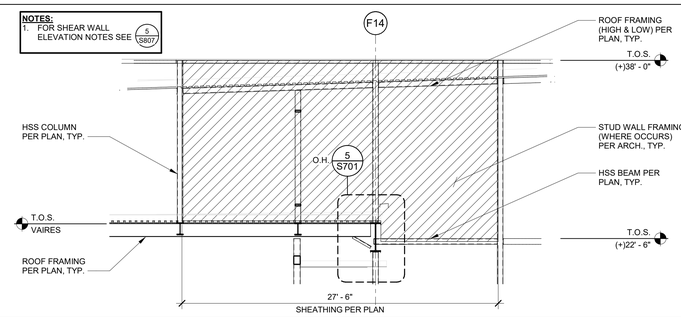

SHEAR WALL ELEVATION (LOOKING NORTH) - BUILDING F | 3/16" = 1'-0" | 22

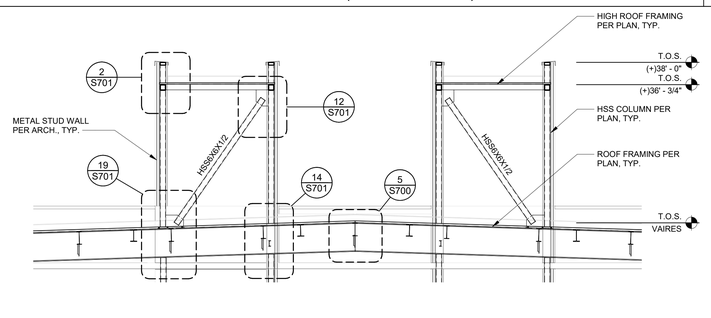

BRACE FRAME ELEVATION (LOOKING EAST) - BUILDING F | 3/16" = 1'-0" | 12

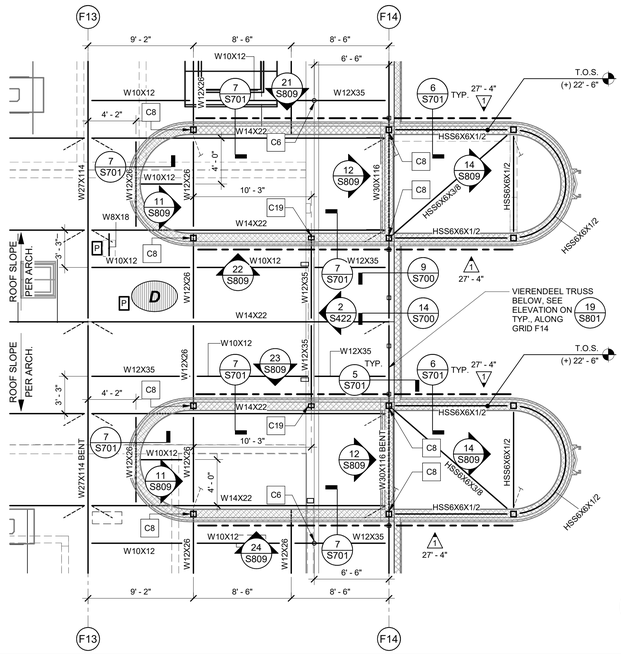
F13
F14
9' - 2"
8' - 6"
8' - 6"
6' - 6"
W10X12
W12X35
W12X26
W14X22
W30X116
W27X114
HSS6X6X1/2
HSS6X6X1/2 (LOW)
HSS6X6X1/2 (LOW)
HSS6X6X1/2
HSS6X6X1/2
HSS6X6X1/2

\\tet-file1\Users\yasser.ahmad_TETER\Documents\12032-P-COS Tulare CTE_yasser.ahmadF7SSY.rvt

ANCHORAGE & BRACING NOTES

MEP COMPONENT ANCHORAGE NOTE

ALL MECHANICAL, PLUMBING AND ELECTRICAL COMPONENTS SHALL BE ANCHORED AND INSTALLED PER THE DETAILS ON THE DSA APPROVED CONSTRUCTION DOCUMENTS. THE FOLLOWING COMPONENTS SHALL BE ANCHORED OR BRACED TO MEET THE FORCE AND DISPLACEMENT REQUIREMENTS PRESCRIBED IN THE 2019 CBC, SECTIONS 1617A.1.18 THROUGH 1617A.1.26 AND ASCE 7-16 CHAPTERS 13, 26, AND 30:

1. ALL PERMANENT EQUIPMENT AND COMPONENTS.
2. TEMPORARY, MOVABLE OR MOBILE EQUIPMENT THAT IS PERMANENTLY ATTACHED (E.G. HARD WIRED) TO THE BUILDING UTILITY SERVICES SUCH AS ELECTRICITY, GAS OR WATER. "PERMANENTLY ATTACHED" SHALL INCLUDE ALL ELECTRICAL CONNECTIONS EXCEPT FOR 110/220 VOLT RECEPTACLES HAVING A FLEXIBLE CABLE.
3. TEMPORARY, MOVABLE OR MOBILE EQUIPMENT WHICH IS HEAVIER THAN 400 POUNDS OR HAS A CENTER OF MASS LOCATED 4 FEET OR MORE ABOVE THE ADJACENT FLOOR OR ROOF LEVEL THAT DIRECTLY SUPPORT THE COMPONENT IS REQUIRED TO BE RESTRAINED IN A MANNER APPROVED BY DSA.

THE FOLLOWING MECHANICAL AND ELECTRICAL COMPONENTS SHALL BE POSITIVELY ATTACHED TO THE STRUCTURE, BUT NEED NOT DEMONSTRATE DESIGN COMPLIANCE WITH THE REFERENCES NOTED ABOVE. THESE COMPONENTS SHALL HAVE FLEXIBLE CONNECTIONS PROVIDED BETWEEN THE COMPONENT AND ASSOCIATED DUCTWORK, PIPING, AND CONDUIT. FLEXIBLE CONNECTIONS MUST ALLOW MOVEMENT IN BOTH TRANSVERSE AND LONGITUDINAL DIRECTIONS:

A. COMPONENTS WEIGHING LESS THAN 400 POUNDS AND HAVE A CENTER OF MASS LOCATED 4 FEET OR LESS ABOVE THE ADJACENT FLOOR OR ROOF LEVEL THAT DIRECTLY SUPPORT THE COMPONENT.
B. COMPONENTS WEIGHING LESS THAN 20 POUNDS, OR IN THE CASE OF DISTRIBUTED SYSTEMS, LESS THAN 5 POUNDS PER FOOT, WHICH ARE SUSPENDED FROM A ROOF OR FLOOR OR HUNG FROM A WALL.

THE ANCHORAGE OF ALL MECHANICAL, ELECTRICAL AND PLUMBING COMPONENTS SHALL BE SUBJECT TO THE APPROVAL OF THE DESIGN PROFESSIONAL IN GENERAL RESPONSIBLE CHARGE OR STRUCTURAL ENGINEER DELEGATED RESPONSIBILITY AND ACCEPTANCE BY DSA. THE PROJECT INSPECTOR WILL VERIFY THAT ALL COMPONENTS AND EQUIPMENT HAVE BEEN ANCHORED IN ACCORDANCE WITH ABOVE REQUIREMENTS.

PIPING, DUCTWORK, AND ELECTRICAL DISTRIBUTION SYSTEM BRACING NOTE

PIPING, DUCTWORK, AND ELECTRICAL DISTRIBUTION SYSTEMS SHALL BE BRACED TO COMPLY WITH THE FORCES AND DISPLACEMENTS PRESCRIBED IN ASCE 7-16 SECTION 13.3 AS DEFINED IN ASCE 7-16 SECTIONS 13.6.5, 13.6.6, 13.6.7, 13.6.8; AND 2019 CBC, SECTIONS 1617A.1.24, 1617A.1.25 AND 1617A.1.26.

THE METHOD OF SHOWING BRACING AND ATTACHMENTS TO THE STRUCTURE FOR THE IDENTIFIED DISTRIBUTION SYSTEM ARE AS NOTED BELOW. WHEN BRACING AND ATTACHMENTS ARE BASED ON A PRE-APPROVED INSTALLATION GUIDE (E.G., OSHPD OPM FOR 2013 CBC OR LATER), COPIES OF THE BRACING SYSTEM INSTALLATION GUIDE OR MANUAL SHALL BE AVAILABLE ON THE JOBSITE PRIOR TO THE START OF AND DURING THE HANGING AND BRACING OF THE DISTRIBUTION SYSTEMS. THE STRUCTURAL ENGINEER OF RECORD SHALL VERIFY THE ADEQUACY OF THE STRUCTURE TO SUPPORT THE HANGER AND BRACE LOADS.

MECHANICAL PIPING (MP), MECHANICAL DUCTS (MD), PLUMBING PIPING (PP), ELECTRICAL DISTRIBUTION SYSTEMS (E):

MP ☐ MD ☐ PP ☐ E ☐ - OPTION 1: DETAILED ON THE APPROVED DRAWINGS WITH PROJECT SPECIFIC NOTES AND DETAILS.

MP ☐ MD ☐ PP ☒ E ☐ - OPTION 2: SHALL COMPLY WITH THE APPLICABLE OSHPD PRE-APPROVAL (OPM #) # 0043-13, MASON WEST INDUSTRIES.

PLUMBING LEGEND

SYMBOL	ITEM	ABBR.
	ABOVE	ABV
	ABOVE CEILING	ABV CLG
	ABOVE FINISHED FLOOR	AFF
	ALTERNATE	ALT
&	AND	
	ARCHITECT / ARCHITECTURAL	ARCH
@	AT	
	BELOW FLOOR	BEL FLR
	BELOW GRADE	BEL GR
	CALIFORNIA MECHANICAL CODE	CMC
	CALIFORNIA PLUMBING CODE	CPC
	CEILING	CLG
℄	CENTER LINE	
⟅	CONTINUATION	CONT
	CUBIC FEET PER HOUR	CFH
∅	DIAMETER	DIA
	DOWN	DN
	DRAWING	DWG
	ELBOW	ELL
	ELECTRICAL	ELEC
	EXISTING	(E)
	FEET	FT
	FLOOR	FLR
	FLOW LINE	FL
	GALLON	GAL
	GALLONS PER HOUR	GPH
	GALLONS PER MINUTE	GPM
	GAUGE	GA
	INSIDE DIAMETER	ID
	INVERT ELEVATION	I.E.
	MAXIMUM	MAX
	MINIMUM	MIN
	NEW	(N)
	NOT IN CONTRACT	NIC
	NOT TO SCALE	NTS
#	NUMBER	NO.
	OUTSIDE DIAMETER	OD
	POUNDS	LBS
	POUNDS PER SQUARE INCH	PSI
	POUNDS PER SQUARE INCH ABSOLUTE	PSIA
	POUNDS PER SQUARE INCH GAUGE	PSIG
	POLYVINYL CHLORIDE	PVC
	ROOM	RM
	SPECIFICATION	SPEC
	SQUARE FEET	SQ FT
	STAINLESS STEEL	SS
	TEMPERATURE	TEMP
	THROUGH	THRU
	TYPICAL	(TYP)
	UNDER GROUND	U/G
	WATER COLUMN	WC
	WITH	W/
	WITHOUT	W/O
—A—	COMPRESSED AIR	A
—AV—	ACID VENT	AV
—AW—	ACID WASTE	AW
	ACID VENT RISER	AVR
	ACID VENT THRU ROOF	AVTR
—CD—	CONDENSATE DRAIN	CD
— – —	DOMESTIC COLD WATER	CW
— – – —	DOMESTIC HOT WATER	HW
— – – – —	DOMESTIC HOT WATER RETURN	HWR
—G—	LOW PRESSURE NATURAL GAS	G
—HPG—	HIGH PRESSURE GAS	HPG
—ICW—	INDUSTRIAL COLD WATER	ICW
—LPG—	LIQUIFIED PETROLEUM GAS	LPG
—F—	FIRE PROTECTION LINE	
—RWL—	RAIN WATER LEADER	RWL
—OD—	OVERFLOW DRAIN	OD
—SD—	STORM DRAIN	SD
	SOIL or WASTE	S or W
—AR—	ARGON	AR
—O_2—	OXYGEN	O_2
—ACE—	ACETYLENE	ACE
—CO2—	CARBON DIOXIDE	CO2
— — — — —	VENT	V
	VENT RISER	VR
	VENT THRU ROOF	VTR
	CLEANOUT TO GRADE	COTG
	DEMOLITION	DEMO
— — — —	EXISTING PIPING	
	FLOOR CLEANOUT	FCO
	HOSE BIBB	
	PIPING TURN UP	
	PIPING TURN DOWN	
	PIPING CAP	
	POINT OF CONNECTION TO EXISTING	POC
	ANGLE VALVE	
	BALANCE VALVE	
	BALL VALVE	
	CHECK VALVE	

SYMBOL	ITEM	ABBR.
	CONCENTRIC REDUCER	
	TWO-WAY CONTROL VALVE	
	PLUG VALVE	
	PRESSURE REDUCING VALVE	
	SHUT-OFF VALVE IN BOX	SOV
	SHUT-OFF VALVE	SOV
	THERMOSTATIC MIXING VALVE	
	TEMPERATURE / PRESSURE RELIEF VALVE	PRV
	UNION	
	WALL CLEANOUT	WCO
	"Y" TYPE STRAINER	
(P)	PRESSURE GAUGE	
(T)	TEMPERATURE GAUGE	
1	KEYNOTE	
2 / P202	DETAIL REFERENCE EXAMPLE: DETAIL 2, SHEET P202	
3 / P400	SECTION REFERENCE EXAMPLE: SECTION 3, SHEET P400	

GENERAL NOTES

1. COORDINATION OF WORK: LAYOUT OF MATERIALS, EQUIPMENT AND SYSTEMS IS GENERALLY DIAGRAMMATIC UNLESS SPECIFICALLY DIMENSIONED. SOME WORK MAY BE SHOWN OFFSET FOR CLARITY.
2. THE ACTUAL LOCATION OF ALL MATERIALS, PIPING, DUCTWORK, FIXTURES, EQUIPMENT, SUPPORTS, ETC. SHALL BE CAREFULLY PLANNED, PRIOR TO INSTALLATION OF ANY WORK TO AVOID ALL INTERFERENCES WITH EACH OTHER, OR WITH STRUCTURAL, ELECTRICAL, ARCHITECTURAL OR OTHER ELEMENTS.
3. VERIFY THE PROPER VOLTAGE AND PHASE OF ALL EQUIPMENT WITH THE ELECTRICAL PLANS. ALL CONFLICTS SHALL BE CALLED TO THE ATTEN TION OF THE ARCHITECT AND THE ENGINEER PRIOR TO THE INSTALLATION OF ANY WORK OR THE ORDERING OF ANY EQUIPMENT.
4. ALL DRAWINGS AND SPECIFICATIONS ARE TO BE CONSIDERED PART OF THE CONTRACT DOCUMENTS. THE CONTRACTOR SHALL BE RESPONSIBLE FOR THE REVIEW AND COORDINATION OF ALL DRAWINGS PRIOR TO ANY CONSTRUCTION, INCLUDING ARCHITECTURAL, STRUCTURAL, MECHANICAL, PLUMBING, AND ELECTRICAL. ANY WORK PERFORMED IN CONFLICT WITH THE CONTRACT DOCUMENTS OR ANY CODE REQUIREMENT SHALL BE CORRECTED BY THE CONTRACTOR AT HIS OWN EXPENSE AND AT NO EXPENSE TO THE OWNER OR THE OWNER REPRESENTATIVE.
5. MINIMUM SLOPE FOR SEWER IS 1/4"PER FT, UNLESS OTHERWISE NOTED.
6. ALL ROOF PENETRATIONS SHALL BE COMPATIBLE WITH ROOF SYSTEM WITH AS FEW PENETRATIONS AS POSSIBLE.
7. MINIMUM DOMESTIC WATER PIPE SIZE TO BE 3/4" UNLESS OTHERWISE NOTED. USE A REDUCING ELL AT FIXTURE, IF NECESSARY.
8. ALL PLUMBING FIXTURES, VALVES, FAUCETS, FIXTURE STOPS, ETC. WHICH PROVIDE WATER FOR HUMAN CONSUMPTION MUST MEET THE "LEAD FREE" REQUIREMENT FOR THE STATE OF CALIFORNIA.
9. MAXIMUM ALLOWABLE DISTANCE FOR HOT WATER LATERALS TO FIXTURES OFF OF THE CIRCULATING MAIN SHALL BE 10'-0" FOR HAND WASH SINKS AND LAVS, AND 15'-0" FOR OTHER SINKS.

PLUMBING SHEET INDEX

P001 PLUMBING LEGENDS AND NOTES
P002 PLUMBING SCHEDULES
P100 PLUMBING SITE PLAN
P200 PLUMBING PLAN - BUILDING D
P201 PLUMBING PLATFORM PLAN - BUILDING D
P210 PLUMBING PLAN - BUILDING E
P211 PLUMBING PLATFORM PLAN - BUILDING E
P220 PLUMBING PLAN - BUILDING F
P221 PLUMBING PLATFORM PLANS – BULDING F
P300 ENLARGED PLUMBING PLAN - BUILDING D
P320 ENLARGED PLUMBING FLOOR PLAN - BUILDING F
P321 ENLARGED PLUMBING FLOOR PLAN - BUILDING E & F
P322 ENLARGED PLUMBING FLOOR PLAN - BUILDING F
P500 PLUMBING ROOF PLAN - BUILDING D
P510 PLUMBING ROOF PLAN - BUILDING E
P520 PLUMBING ROOF PLAN - BUILDING F
P800 PLUMBING DETAILS
P801 ENLARGED PLUMBING SITE PLAN AND DETAILS

PLOT DATE: 11/1/2022 2:52:01 PM

FOR BID ONLY

Teter, LLP expressly reserves its common law copyright and other property rights in these plans. This document, the ideas and designs incorporated herein, as an instrument of professional service, is not to be used in whole or in part, for any other project without prior written authorization.

MARK	DATE	DESCRIPTION
	11/1/2022	DSA BACKCHECK

TETER, LLP
FRESNO HEADQUARTERS
VISALIA | BAKERSFIELD | MODESTO | SAN LUIS OBISPO
ARCHITECTS ENGINEERS CONNECTED

TULARE CAMPUS CTE
COLLEGE OF THE SEQUOIAS
4999 E. BARDSLEY AVE.
TULARE, CA

DRAWING TITLE
PLUMBING LEGENDS AND NOTES

PROJECT NO.
21-12032

DRAWING
P001

PLUMBING SCHEDULE

PLUMBING FIXTURE SCHEDULE

MARK	FIXTURE	S OR W	V	CW	HW	DESCRIPTION
WC-1	WATER CLOSET	4"	2"	1"	_	KOHLER K-84325 "KINSTON ULTRA" 1.28 GPF, WALL MOUNT, ELONGATED BOWL, BOLT CAPS, ZURN ZER6000AV-CPM-HET (PROVIDE -TPO TRAP PRIMER FOR FLUSH VALVE WHERE INDICATED ON DRAWINGS), BATTERY SENSOR 1.28 GPF DIAPHRAGM FLUSH VALVE WITH MANUAL OVERRRIDE BUTTON, CHURCH 295SSCT SOLID PLASTIC OPEN FRONT SEAT WITH STAINLESS STEEL HINGE POSTS, SELF-SUSTAINING CHECK HINGES, AND STA-TITE FASTENING SYSTEM, AND JAY R. SMITH 410 SERIES SUPPORT CARRIER. SEE ARCHITECTURAL DRAWINGS FOR STANDARD MOUNTING HEIGHTS.
WC-2	WATER CLOSET ADA	4"	2"	1"	_	KOHLER K-84325 "KINSTON ULTRA" 1.28 GPF, WALL MOUNT, ELONGATED BOWL, BOLT CAPS, ZURN ZER6000AV-CPM-HET (PROVIDE -TPO TRAP PRIMER FOR FLUSH VALVE WHERE INDICATED ON DRAWINGS), BATTERY SENSOR 1.28 GPF DIAPHRAGM FLUSH VALVE WITH MANUAL OVERRIDE BUTTON, CHURCH 295SSCT SOLID PLASTIC OPEN FRONT SEAT WITH STAINLESS STEEL HINGE POSTS, SELF-SUSTAINING CHECK HINGES, AND STA-TITE FASTENING SYSTEM, AND JAY R. SMITH 410 SERIES SUPPORT CARRIER. SEE ARCHITECTURAL DRAWINGS FOR ACCESSIBLE MOUNTING HEIGHTS.
U-1	URINAL ADA	2"	1-1/2"	3/4"	_	KOHLER K-4991-ET, "BARDON" PINT URINAL, 0.125 GPF, WALL-HUNG, WASHOUT STYLE WITH STRAINER, ZURN ZER6003AV-CPM-HET,BATTERY SENSOR 0.125 GPF, DIAPHRAGM FLUSH VALVE WITH MANUAL OVERRIDE BUTTON, AND JAY R. SMITH 637 SERIES FLOOR MOUNTED SUPPORT CARRIER. SEE ARCHITECTURAL DRAWINGS FOR ACCESSIBLE MOUNTING HEIGHTS.
U-2	URINAL	2"	2"	3/4"	_	KOHLER K-4991-ET, "BARDON" PINT URINAL, 0.125 GPF, WALL-HUNG, WASHOUT STYLE WITH STRAINER, ZURN ZER6003AV-CPM-ULF, BATTERY SENSOR 0.125 GPF DIAPHRAGM FLUSH VALVE WITH MANUAL OVERRIDE BUTTON, AND JAY R. SMITH 637 SERIES FLOOR MOUNTED SUPPORT CARRIER. SEE ARCHITECTURAL DRAWINGS FOR MOUNTING HEIGHTS.
L-1	LAVATORY ADA	2"	1-1/2"	1/2"	1/2"	KOHLER K-2005-0, KINGSTON WALL-HUNG, 20"x18" VITREOUS CHINA WITH BACKSPLASH & WALL BRACKET, 4" CENTERS FAUCET HOLES , ZURN Z6915-XL-TMV-1 BATTERY SENSOR FAUCET W/0.56 GPM SPRAY OUTLET AND THERMOSTATIC MIXING VALVE, SET FAUCET CYCLE TIME FOR 10 SECONDS, McGUIRE 155WC OFFSET GRID DRAIN, AND JAY R. SMITH 700-Z SUPPORT CARRIER WITH CONCEALED ARMS. PROVIDE WILKINS ZW3870XLT-4P POINT OF USE THERMOSTATIC MIXING VALVE BELOW LAV. SEE ARCHITECTURAL DRAWINGS FOR ACCESSIBLE MOUNTING HEIGHTS.
WS-1	WASH SINK ADA	2"	1-1/2"	1/2"	1/2"	JUST J-ADA-4820-S, 2-STATION WALL MOUNT TYPE 304 14 GAUGE STAINLESS STEEL SINK, 48" X 20" X 5-1/2" DEEP WITH BACKSPLASH, J-35-SSF FLAT STRAINER DRAIN, AND TWO JSL-46-B, BATTERY SENSOR GOOSENECK FAUCETS W/1.5 GPM FLOW OUTLET AND JUST JTM-47 THERMOSTATIC MIXING VALVE, TWO 14 GAUGE STAINLESS STEEL WALL BRACKETS AND WALL CLIPS MOUNTED TO BACKING IN WALL.
WS-2	WASH SINK	2"	1-1/2"	1/2"	1/2"	JUST J-4820, 2-STATION WALL MOUNT TYPE 304 14 GAUGE STAINLESS STEEL SINK, 48" X 20" X 8" DEEP WITH JUST J-35-SSF FLAT STRAINER DRAIN, AND TWO JUST JSL-46-B, BATTERY SENSOR GOOSENECK FAUCETS WITH 1.5 GPM FLOW OUTLET AND JUST JTM-47 THERMOSTATIC MIXING VALVE,, TWO 14 GAUGE STAINLESS STEEL WALL BRACKETS AND WALL CLIPS MOUNTED TO BACKING IN WALL.
S-1	SINK ADA	2"	1-1/2"	1/2"	1/2"	JUST SL-ADA-2125-A-GR, SINGLE COMPARTMENT DROP-IN MOUNT, 16" X 22" X 6" DEEP BOWL SIZE, 18 GAUGE TYPE 304 STAINLESS STEEL WITH CENTER REAR DRAIN LOCATION, ZURN Z831C4-XL-22F FAUCET WITH 8" GOOSENECK SPOUT, 1.0 GPM LAMINAR FLOW OUTLET AND WITH WRIST BLABE HANDLES. PROVIDE WILKINS ZW3870XLT-4P POINT OF USE THERMOSTATIC MIXING VALVE BELOW SINK.
S-2	SINK ADA	2"	1-1/2"	1/2"	1/2"	JUST SL-ADA-2017-A-GR, SINGLE COMPARTMENT DROP-IN MOUNT, 14" X 14" X 6" DEEP BOWL SIZE, 18 GAUGE TYPE 304 STAINLESS STEEL WITH CENTER REAR DRAIN LOCATION, ZURN Z831S1-XL-1TM FAUCET WITH 8" HIGH ARC SWING SPOUT, 1.5 GPM AERATOR AND LEVER HANDLES. PROVIDE WILKINS ZW3870XLT-4P POINT OF USE THERMOSTATIC MIXING VALVE BELOW SINK.
MS-1	MOP SINK	3"	2"	1/2"	1/2"	KOHLER WHITBY K-6710 CORNER STYLE FLOOR MOUNTED, 28"x28"x12" DEEP ENAMELED CAST IRON WITH #K-8940 RIM GUARD, #K-9146 DRAIN STRAINER, CHICAGO MODEL 897-CP WALL MOUNT POLISHED CHROME FAUCET WITH HOSE THREAD OUTLET, VACUUM BREAKER, INTEGRAL STOPS, AND WALL BRACE. FLORESTONE #MR-370 HOSE WITH HOOK, AND FLORSTONE MR-372 MOP HANGER.
ES-1	EMERGENCY SHOWER EYE/FACE WASH ADA	2"	1-1/2"	1-1/2"	_	HAWS "AXION" #8356WCW, COMBINATION BARRIER FREE RECESSED SHOWER AND EYE/FACE WASH, 18 GAUGE TYPE 304 STAINLESS STEEL RECESSED CABINET WITH PULL DOWN EYE/FACE WASH UNIT WITH DRAIN PAN, AND STAINLESS STEEL SHOWERHEAD WITH PULL DOWN HANDLE. PROVIDED WITH UNIVERSAL EMERGENCY SIGN.
EW-1	EMERGENCY EYE/FACE WASH ADA	2"	1-1/2"	1/2"	_	HAWS "AXION" #7656WCC, BARRIER FREE RECESSED EYE/FACE WASH, 18 GAUGE TYPE 304 STAINLESS STEEL RECESSED CABINET WITH PULL DOWN EYE/FACE WASH UNIT WITH DRAIN PAN, AND STAINLESS STEEL. PROVIDED WITH UNIVERSAL EMERGENCY SIGN.
EDF-1	ELECTRIC DRINKING FOUNTAIN	2"	1-1/2"	1/2"	_	ELKAY MODEL LZSTL8WSLK, WALL MOUNTED, HI-LO DUAL HEIGHT BARRIER FREE FOUNTAINS AND BOTTLE FILLING STATION, INTEGRAL FILTER, POLISHED CHROME PLATED BRASS BUBBLER HEADS, PUSH BUTTON VALVES. PROVIDE OPTIONAL MLP200 SUPPORT CARRIER. CHILLER UNIT PROVIDES 8 GPH OF 50 DEGREE F. MINIMUM WATER, ELECTRICAL REQUIRED 370 WATTS, 1.0 FLA; 120V/1PH. WEIGHT = 105 LBS. SEE ARCHITECTURAL DRAWINGS FOR MOUNTING HEIGHT. PROVIDE (2) ELKAY 51300C REPLACEMENT FILTERS.
FD-1	FLOOR DRAIN	2"	1-1/2"	1/2" TP	_	JAY R. SMITH 2005Y-A05-HP-P050 COATED CAST IRON WITH 5" DIAMETER ROUND NICKEL BRONZE HEEL PROOF GRATE, DOUBLE DRAINAGE FLANGE, NO HUB OUTLET AND TRAP PRIMER CONNECTION.
FD-2	FLOOR DRAIN	3"	2"	1/2" TP	_	JAY R. SMITH 2110Y-NB-P050 COATED CAST IRON WITH 8" DIAMETER ROUND NICKEL BRONZE GRATE, DOUBLE DRAINAGE FLANGE, NO HUB 3" PIPE OUTLET AND TRAP PRIMER CONNECTION.
FD-3	FLOOR DRAIN	2"	2"	1/2" TP	_	JAY R. SMITH 2108Y-P050 COATED CAST IRON WITH 7" DIAMETER ROUND GRATE, DOUBLE DRAINAGE FLANGE, NO HUB 2" PIPE OUTLET AND TRAP PRIMER CONNECTION.
TD-1	TRENCH DRAIN	4"	2"	1/2" TP	_	JAY R. SMITH # 9836 SERIES PRECAST POLYMER CONCRETE CHANNEL TRENCH DRAIN SYSTEM WITH OPTIONAL STAINLESS STEEL RAIL EDGE, (2) STAINLESS STEEL CLOSING END CAPS, AND "JAY R. SMITH #9870-477-ML 1-3/4" X 1" LONGITUDINAL DUCTILE IRON HEAVY DUTY SLOTTED GRATE, DIN 19580 CLASS C-56,000 LBS. RATING. EACH TRENCH SECTION IS 39.33" LONG. PROVIDE ENOUGH TRENCH SECTIONS AND GRATE SECTIONS INTERLOCKED LINEARLY TOGETHER AND INSTALLED TO MEET THE OVERALLTRENCH LENGTH AS INDICATED ON THE DRAWINGS.
FS-1	FLOOR SINK	2"	1-1/2"	1/2" TP	_	AY R. SMITH 3100Y-12-C, 8" X 8" X 6" DEEP COATED CAST IRON WITH NICKEL BRONZE RIM WITH HALF GRATE, DOME BOTTOM STRAINER, DOUBLE DRAINAGE FLANGE,NO HUB OUTLETAND #2695Y-2 TRAP PRIMER CONNECTION FITTING.WHERE APPLICABLE.
FS-2	FLOOR SINK	3"	2"	1/2" TP	_	JAY R. SMITH 3150Y-12-C, 12" X 12" X 8" DEEP COATED CAST IRON WITH NICKEL BRONZE RIM WITH HALF GRATE, DOME BOTTOM STRAINER, DOUBLE DRAINAGE FLANGE,NO HUB OUTLETAND #2695Y-2 TRAP PRIMER CONNECTION FITTING WHERE APPLICABLE.
FS-3	FLOOR SINK	6"	4"	1/2" TP	_	JAY R. SMITH 32000Y-11-C, 16" X 1" X 12" DEEP COATED CAST IRON WITH NICKEL BRONZE RIM, DOME BOTTOM STRAINER, DOUBLE DRAINAGE FLANGE, 6" NO HUB PIPE OUTLET, AND #2695Y-2 TRAP PRIMER CONNECTION FITTING.
HB-1	HOSE BIBB	_	_	3/4"	_	WOODFORD #24P 3/4" INLET BRASS WALL HOSE FAUCET WITH WALL FLANGE, LOCKSHIELD, NON-REMOVABLE VACUUM BREAKER, AND OPTIONAL LOOSE TEE KEY HANDLE. PROVIDE POLISHED CHROME FINISH FOR INDOORS, ROUGH CHROME FINISH FOR OUTDOORS.
HB-2	HOSE BIBB	_	_	3/4"	_	WOODFORD #Y24 3/4" INLET BRASS STANDPIPE HOSE FAUCET WITH LOCKSHIELD, NON-REMOVABLE VACUUM BREAKER, AND OPTIONAL LOOSE TEE KEY HANDLE. ROUGH BRONZE FINISH.
WMB-1	WASHING MACHINE BOX	2"	1-1/2"	3/4"	3/4"	GUY GRAY MODEL SSWB3, STAINLESS STEEL RECESSED WASHING MACHINE OUTLET BOX WITH CENTER DRAIN & WATER HOSE VALVE W/ ARRESTORS.
SB-1	SUPPLY BOX	_	_	1/2"	_	SPECIALITY PRODUCTS OB-509-LL, LEAD FREE RECESSED METAL ICE MAKER WATER SUPPLY BOX WITH WHITE FINISH, INTEGRAL SHUT-OFF-VALVE AND MINI WATER HAMMER ARRESTER.
TP-1	TRAP PRIMER	_	_	3/4"	_	PRECISION PLUMBING PRODUCTS PT-4, "PRIME-TIME" ELECTRONICALLY ACTIVATED PRE-PIPED MANIFOLD UNIT FOR UP TO (4) FLOOR DRAINS. PROVIDE 14"x16" STAINLESS STEEL ACCESS DOOR WITH CYLINDER LOCK. ELECTRICAL REQUIRED = 120V/1, 0.28 AMPS.
TP-2	TRAP PRIMER	_	_	1/2"	_	PRECISION PLUMBING PRODUCTS MPB-500-115V, "MINI-PRIME" ELECTRONICALLY ACTIVATED PRE-PIPED MANIFOLD UNIT FOR (1) FLOOR DRAIN. PROVIDE #F-814SS, 12"x12" STAINLESS STEEL ACCESS DOOR WITH CYLINDER LOCK. ELECTRICAL REQUIRED = 120V/1, 6.3 WATTS
SA-1	SHOCK ABSORBER	_	_	1"	_	SIOUX CHIEF HYDRA-RESTER MODEL 654-CS SEAMLESS COPPER CHAMBER APPROVED FOR CONCEALED INSTALLATION PDI SYMBOL "C". INSTALL IN UPWARD POSITION.
RO-1	ROOF DRAIN/OVERFLOW DRAIN	_	_	_	_	JAY R. SMITH 1850-Y-WD04-CIDG COMBINATION ROOF AND OVERFLOW DRAIN WITH 12" DIAMETER GALVANIZED CAST IRON DOMES AND OPTIONAL 4" HIGH WATER DAM FOR OVERFLOW. SEE PLANS FOR OUTLET SIZE.
GD-1	GUTTER DRAIN	3"	_	_	_	JAY R SMITH 1630T, 6" DIAMETER GUTTER DRAIN W/ 4-1/2" HIGH DOME FLASHING CLAMP AND GUTTER LINER. THREADED OUTLET FOR 3"Ø PIPE SIZE.
DC-1	DOWNSPOUT COVER	_	_	_	_	JAY R. SMITH 1775-U DOWNSPOUT COVER FOR OVERFLOW DRAIN PIPE DAYLIGHT, AND WITH OPTIONAL VANDAL PROOF SCREWS. SEE PLANS FOR SIZE.
GPR-1	GAS PRESSURE REGULATOR	_	_	_	_	ELSTER-AMERICAN #1813-C, 1-1/4" INLET AND OUTLET SIZE, WITH 9/16" ORIFICE, SPRING NO. 70017P044, 2500 CFH CAPACITY AT 5 PSIG INLET PRESSURE, OUTLET PRESSURE SET AT 7" W.C.
TET-1	THERMAL EXPANSION TANK	_	_	3/4"	_	WILKINS THERM-X-TROL ST-12-C, 5 GALLON CAPACITY ASME RATED EXPANSION TANK WITH IN-LINE CONNECTIONS, FDA APPROVED BLADDER FOR POTABLE WATER USE.
CP-1	CIRCULATING PUMP	_	_	_	3/4"	GRUNDFOS MODEL UPS15-55SFC STAINLESS STEEL DOMESTIC HOT WATER IN-LINE CIRCULATING PUMP, WITH FLANGED CONNECTIONS, 3-SPEED MOTOR, INTEGRAL CHECK VALVE, 5 GPM AT 13 FT. TDH., 1/12 HP, 120V/1PH. (CONTROL THRU "HONEYWELL" AQUASTAT AND DIGITAL 365 DAY TIME CLOCK OR EMS CONTACTS.
WH-1	TANKLESS WATER HEATER	_	3"	3/4"	3/4"	NAVIEN #NPE-240-A2, GAS-FIRED LOW NOx CONDENSING INDOOR TANKLESS WATER HEATER WITH INTEGRAL HOT WATER RETURN CIRCULATING PUMP AND BUFFER TANK, STAINLESS STEEL HEAT EXCHANGERS, DUAL MICROPROCESSORS, #NR-10DU REMOTE CONTROLLERS, ELECTRIC IGNITION, FULLY MODULATING, LEAK DETECTOR, AIR INTAKE FILTER, 120V, 200 WATTS, 2 AMPS EACH, 199,900 MAXIMUM BTUH INPUT, 6.2 GPM CONTINUOUS FLOW RATE EACH AT 120 DEGREES F. SUPPLY TEMPERATURE. PROVIDE OPTIONAL READY LINK COMMUNICATION CABLE ACCESSORY #GXXX000546, OPTIONAL NEUTRALIZER KIT # GXXX001324, OPTIONAL PIPE COVER #30012581A, PROVIDE CPVC EXHAUST AND AIR INTAKE VENTING COMPONENTS FOR DIRECT VENT SYSTEM WITH CPVC CONCENTRIC VENT KIT THROUGH ROOF. OPERATING WEIGHT = 77 LBS. EACH.
WH-2	STORAGE WATER HEATER	_	_	3/4"	3/4"	A.O. SMITH #BTXL-100 CYCLONE Xi, GAS-FIRED LOW NOx CONDENSING WATER HEATER, CLOSED COMBUSTION, POWER DIRECT-VENT, 75 GALLON STORAGE CAPACITY, 100,000 BTUH NATURAL GAS INPUT, 145 GPH RECOVERY @ 80 DEG. F. RISE, ZERO CLEARANCE TO COMBUSTIBLES, 3" DIA. CPVC SEALED DIRECT VENT W/ DURAVENT VERTICAL CPVC CONCENTRIC VENT KIT, AND A.O. SMITH #100112380 CONDENSATE NEURALIZATION KIT, 3/4" T&P RELIEF VALVE WITH FULL SIZE DISCHARGE, 1-1/2" H.W./C.W., 3 AMPS AT 120V/1 PHASE FOR FLUE DAMPER AND ELECTRIC IGNITION, OPERATING WEIGHT = 890 LBS.
AC-1	AIR COMPRESSOR WITH INTEGRAL DRYER	_	_	_	_	ROTARY SCREW AIR COMPRESSOR, "QUINCY" QGS-25 '15, HORIZONTAL TANK MOUNTED WITH OPTIONAL INTEGRATED TANK MOUNT AIR DRYER, 120 GALLON CAPACITY RECEIVER, TEFC HIGH EFFICIENCY DRIVE MOTOR, INFOLOGIC2 CONTROLLER, LOW SOUND ENCLOSURE, WYE DELTA MOTOR STARTING, #EDT-25 TANK DRAIN (120V ELECTRICAL REQ'D), #QCS-100 OIL-WATER SEPARATOR, #80923205 66 PRESSURE KIT, PROVIDE FOR FACTORY START-UP. 15 HP, 480V/3PH, 50 ACFM CAPACITY AT 150 PSIG, OPERATING WEIGHT = 760 LBS., DIMENSIONS = 76.2" LONG X 25.2" WIDE X 57.8" HIGH.
AC-2	AIR COMPRESSOR WITH INTEGRAL DRYER	_	_	_	_	ROTARY SCREW AIR COMPRESSOR. "QUINCY" QGD-25 '16, HORIZONTAL TANK MOUNTED WITH OPTIONAL INTEGRATED TANK MOUNT AIR DRYER, 120 GALLON CAPACITY RECEIVER, TEFC HIGH EFFICIENCY DRIVE MOTOR, INFOLOGIC2 CONTROLLER, LOW SOUND ENCLOSURE, WYE DELTA MOTOR STARTING, #EDT-25 TANK DRAIN (120V ELECTRICAL REQ'D), #QCS-100 OIL-WATER SEPARATOR, #80923205 66 PRESSURE KIT, AND PROVIDE FOR FACTORY START-UP, 25 HP, 480V/3PH, 100 ACFM CAPACITY AT 150 PSIG, OPERATING WEIGHT = 1,880 LBS., DIMENSIONS = 75.8" LONG X 33.1" WIDE X 74.8" HIGH.
AR-1	COMPRESSED AIR HOSE REEL	_	_	3/4" AIR	_	REELCRAFT MODEL 83050-OLP DOUBLE-ARM HOSE REEL, SPRING RETRACTABLE, FULL SWIVEL DESIGN, AND WITH 50' OF 3/4" DELIVERY HOSE, #600801 PIVOT BASE, #3-HR1004-3 ADJUSTABLE BUMPER STOP. PROVIDE COMPATIBLE QUICK CONNECT FITTING AND WITH HOSE END VALVE WITH HANDLE.
WR-1	WATER HOSE REEL	_	_	3/4"	_	REELCRAFT MODEL 83050-OLP DOUBLE-ARM HOSE REEL, SPRING RETRACTABLE, FULL SWIVEL DESIGN, AND WITH 50' OF 3/4" DELIVERY HOSE, #600801 PIVOT BASE, #3-HR1004-3 ADJUSTABLE BUMPER STOP. PROVIDE COMPATIBLE WATER FITTING WITH HOSE END VALVE AND HANDLE.

MARK	FIXTURE	S OR W	V	CW	HW	DESCRIPTION
M-1	ARGON MANIFOLD	_	_	_	_	SINGLE INERT GAS MANIFOLD SYSTEM DESIGNED TO PROVIDE DUAL SOURCE WITH PRIMARY AND RESERVE CYLINDERS FOR ARGON, "VICTOR" MODEL #SSIN-SR450MD-2RW-2LW-580-24FTCV (PART NO. 1132-0146), COMPLETE WITH MASTER SHUT-OFF VALVES, INDIVIDUAL STATION SHUT-OFF VALVES, (2) STATION STRAIGHT HEADER AT LEFT, AND (2) STATION STRAIGHT HEADER AT RIGHT (SEE DRAWINGS FOR CONFIGURATION), 24" LONG PIGTAILS WITH CHECK VALVES, WALL MOUNT KIT, HIGH FLOW REGULATOR, AND RELIEF VALVE.
M-2	CARBON DIOXIDE MANIFOLD	_	_	_	_	SINGLE INERT GAS MANIFOLD SYSTEM DESIGNED TO PROVIDE DUAL SOURCE WITH PRIMARY AND RESERVE CYLINDERS FOR CARBON DIOXIDE, "VICTOR" MODEL #SSIN-SR450MD-4RW-4LW-580-24FTCV (PART NO. 1132-0146), COMPLETE WITH MASTER SHUT-OFF VALVES, INDIVIDUAL STATION SHUT-OFF VALVES, (4) STATION STRAIGHT HEADER AT LEFT, AND (4) STATION STRAIGHT HEADER AT RIGHT (SEE DRAWINGS FOR CONFIGURATION), 24" LONG PIGTAILS WITH CHECK VALVES, WALL MOUNT KIT, HIGH FLOW REGULATOR, AND RELIEF VALVE.
M-3	OXYGEN MANIFOLD	_	_	_	_	SINGLE GAS MANIFOLD SYSTEM DESIGNED TO PROVIDE DUAL SOURCE WITH PRIMARY AND RESERVE CYLINDERS FOR OXYGEN, "VICTOR" MODEL #SSIN-SR450MD-1RW-1LW-640-24FTCV (PART NO. 1132-0292), COMPLETE WITH MASTER SHUT-OFF VALVES, INDIVIDUAL STATION SHUT-OFF VALVES, (1) STATION STRAIGHT HEADER AT LEFT, AND (1) STATION STRAIGHT HEADER AT RIGHT (SEE DRAWINGS FOR CONFIGURATION), 24" LONG PIGTAILS WITH CHECK VALVES, WALL MOUNT KIT, HIGH FLOW REGULATOR, AND RELIEF VALVE.
M-4	ACETYLENE MANIFOLD	_	_	_	_	SINGLE GAS MANIFOLD SYSTEM DESIGNED TO PROVIDE DUAL SOURCE WITH PRIMARY AND RESERVE CYLINDERS FOR ACETYLENE, "VICTOR" MODEL #SSIN-SR460M4-1RW-1LW-5-10-24FTCVFA-09 (PART NO. 1132-0281), COMPLETE WITH MASTER SHUT-OFF VALVES, INDIVIDUAL STATION SHUT-OFF VALVES, (1) STATION STRAIGHT HEADER AT LEFT, AND (1) STATION STRAIGHT HEADER AT RIGHT (SEE DRAWINGS FOR CONFIGURATION), 300SCFH HYDRAULIC FLASHBACK ARRESTOR, 24" LONG PIGTAILS WITH CHECK VALVES, WALL MOUNT KIT, HIGH FLOW REGULATOR, AND RELIEF VALVE.
SSD-1	ARGON SINGLE STATION DROP	_	_	_	_	SINGLE INERT STATION DROP WITH STATION VALVE FOR ARGON SERVICE, "VICTOR" MODEL SD-1-034 (PART NO. 1126-0045) AND WITH "VICTOR" MODEL HRF1425-034 (PART NO. 0781-2808) REGULATOR/FLOW METER AT STATION OUTLET.
SSD-2	CARBON DIOXIDE SINGLE STATION DROP	_	_	_	_	SINGLE INERT STATION DROP WITH STATION VALVE FOR CARBON DIOXIDE MIX SERVICE, "VICTOR" MODEL SD-1-034 (PART NO. 1126-0045) AND WITH "VICTOR" MODEL HRF1425-034 (PART NO. 0781-2808) REGULATOR/FLOW METER AT STATION OUTLET.
SSD-3	OXYGEN SINGLE STATION DROP	_	_	_	_	SINGLE STATION DROP WITH STATION VALVE FOR OXYGEN SERVICE, "VICTOR" MODEL SD-1-024 (PART NO. 1126-0043) AND WITH "VICTOR" MODEL EST4-125-024R (PART NO. 0781-5193) REGULATOR/FLOW METER AT STATION OUTLET.
SSD-4	ACETYLENE SINGLE STATION DROP	_	_	_	_	SINGLE STATION DROP WITH STATION VALVE FOR ACETYLENE SERVICE, "VICTOR" MODEL SD-1-025 (PART NO. 1126-0044) AND WITH "VICTOR" MODEL EST4-15-025R (PART NO. 0781-5209) REGULATOR/FLOW METER AT STATION OUTLET.
FRL-1	FILTER REGULATOR LUBRICATOR	_	_	_	_	WILKERSON # C28, 1/2" COMBINATION FILTER W/ GAUGE, REGULATOR AND LUBRICATOR UNIT.
RS-1	REGULATOR AND SEPARATOR	_	_	1/2"	_	WILKERSON # R18, 1/2" AIR PRESSURE REGULATOR W/ GAUGE, WILKERSON # WSA, 1/2" WATER SEPARATOR W/ PETCOCK.
P-1	IRRIGATION TRAINER PUMP	_	_	_	_	FLOWISE VERTICAL TURBINE PUMP MODEL FW8KC (4 STAGES), 480V/ 3Ø MOTOR, 7.5 HP, 1800 RPM, TEFC ENCLOSURE, 213 T FRAME, 150 GPM FLOWRATE AT 120 FT HEAD.
SOI-1	SAND-OIL INTERCEPTOR	4"	2"	_	_	JENSEN PRECAST MODEL JP1500EE-50, 1500 GALLON CAPACITY PRECAST REINFORCED CONCRETE TANK WITH INTERNAL BAFFLING FOR SAND AND OIL INTERCEPTION, TRAFFIC RATED FOR H-20 LOADING, (2) 24"Ø MANHOLES EXTENDED TO GRADE WITH GAS-TIGHT TRAFFIC WT. CAST IRON COVERS AND FRAMES. SEE 15/P800 FOR DETAIL.
AD-1	AREA DRAIN	4"	2"	_	_	JAY R. SMITH 2450Y-SSB-M, WITH HEAVY DUTY TRAFFIC WEIGHT DUCTILE IRON CRATE AND STAINLESS STEEL SEDIMENT BUCKET.
FD-4	FLOOR DRAIN	6"	3"	_	_	JAY R. SMITH 2120Y-M-P050 COATED CAST IRON WITH 8" DIAMETER ROUND HEAVY DUTY DUCTILE IRON GRATE, DOUBLE DRAINAGE FLANGE, NO HUB 6" PIPE OUTLET AND TRAP PRIMER CONNECTION.

(E)

FOR BID ONLY

Teter, LLP expressly reserves its common law copyright and other property rights in these plans. This document, the ideas and designs incorporated herein, as an instrument of professional service, is not to be used in whole or in part, for any other project without prior written authorization.

MARK	DATE	DESCRIPTION
	11/1/2022	DSA BACKCHECK

TETER, LLP
FRESNO HEADQUARTERS
VISALIA | BAKERSFIELD | MODESTO | SAN LUIS OBISPO
ARCHITECTS ENGINEERS CONNECTED

TULARE CAMPUS CTE
COLLEGE OF THE SEQUOIAS
4999 E. BARDSLEY AVE.
TULARE, CA

DRAWING TITLE
PLUMBING SCHEDULES

PROJECT NO.
21-12032

DRAWING
P002

\\tetr-file1\Users\yasser.ahmad_TETR\Documents\12032-P-COS Tulare CTE_yasser.ahmadF7SSY.rvt

PLOT DATE: 11/1/2022 2:52:02 PM

\\tetr-file1\Users\yasser.ahmad_TETR\Documents\12032-P-COS Tulare CTE_yasser.ahmadF7SSY.rvt

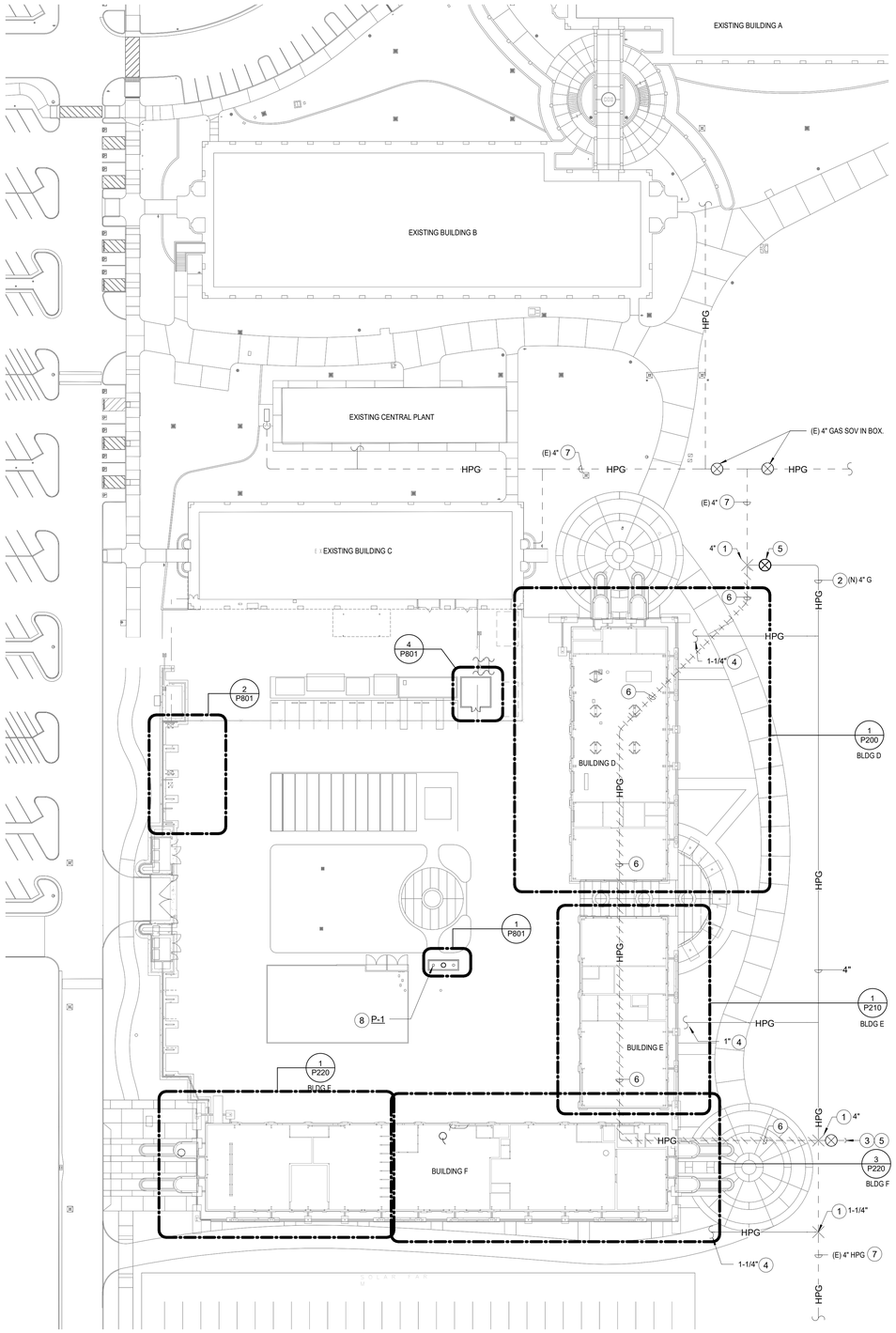

KEYNOTES

1. POC (N) 4" HPG TO (E) 4" 5# GAS LINE BEL. GR. (FIELD VERIFY EXACT LOCATION).
2. (N) 4" HPG (5# GAS) BELOW GRADE.
3. CAP 4" HPG BEL. GR. FOR FUTURE.
4. HPG BEL. GR. TO BLDG. SEE BLDG. PLUMBING PLAN FOR CONT.
5. 4" GAS SOV IN BOX. SEE 1/P800 FOR DETAIL.
6. REMOVE (E) 4" HPG (5# GAS) LINE BEL. GR. SHOWN CROSS-HATCHED.
7. (E) 4" HPG BEL. GR. TO REMAIN.
8. IRRIGATION TRAINER PUMP ASSEMBLY. SEE 1/P801 FOR ENLARGED PLAN.

NORTH

PLUMBING SITE PLAN | 1" = 40'-0" | 1

FOR BID ONLY

Teter, LLP expressly reserves its common law copyright and other property rights in these plans. This document, the ideas and designs incorporated herein, as an instrument of professional service, is not to be used in whole or in part, for any other project without prior written authorization.

MARK	DATE	DESCRIPTION
	11/1/2022	DSA BACKCHECK

TETER, LLP
ARCHITECTS ENGINEERS CONNECTED
FRESNO HEADQUARTERS
VISALIA | BAKERSFIELD | MODESTO | SAN LUIS OBISPO

TULARE CAMPUS CTE
COLLEGE OF THE SEQUOIAS
4999 E. BARDSLEY AVE.
TULARE, CA

DRAWING TITLE
PLUMBING SITE PLAN

PROJECT NO.
21-12032

DRAWING
P100

PLOT DATE: 11/1/2022 2:52:06 PM

\\tet-file1\Users\yasser.ahmad_TETR\Documents\12032-P-COS Tulare CTE_yasser.ahmadF7SSY.rvt

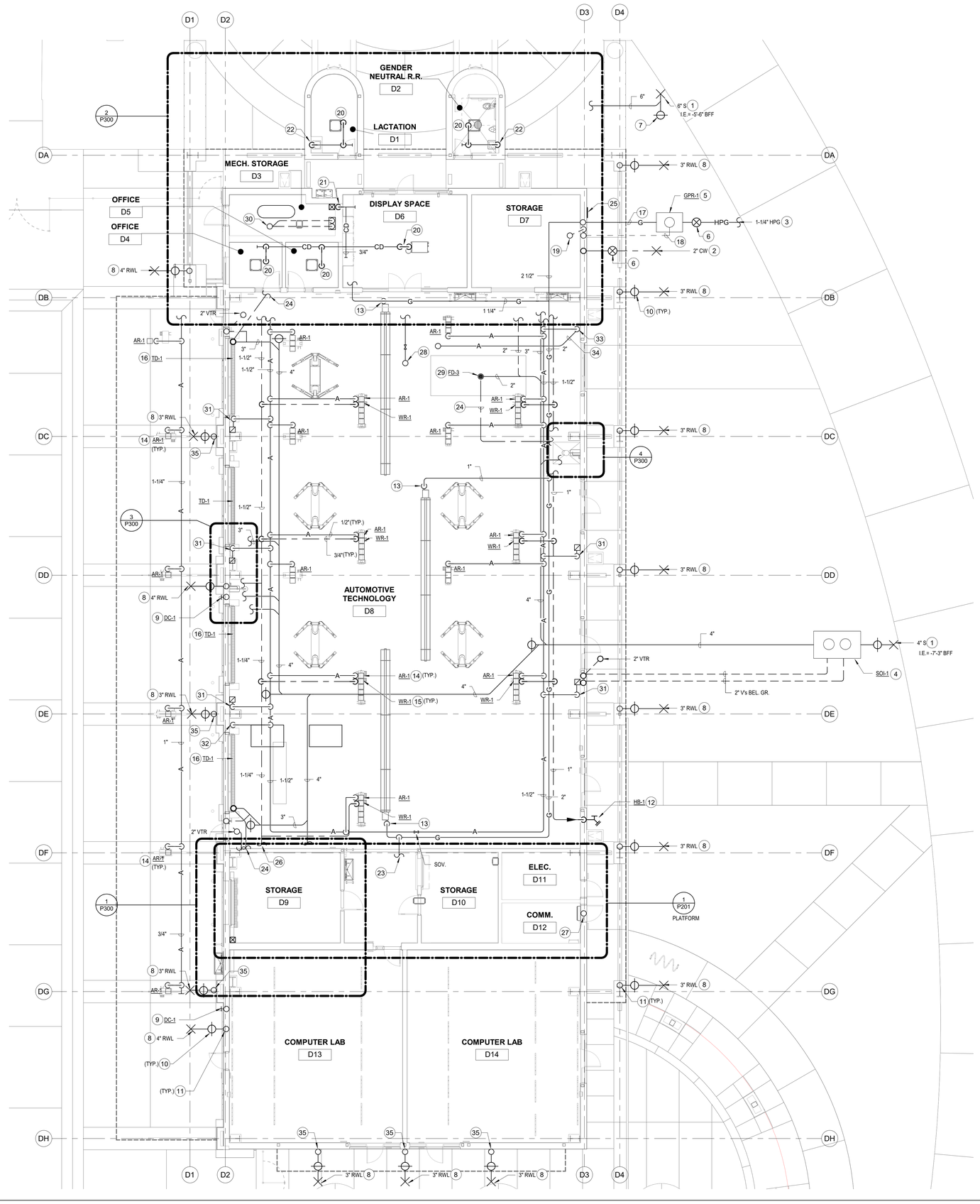

KEYNOTES

1 S. BEL. GR. POC TO SITE SANITARY SEWER. SEE CIVIL DWGS. FOR SITE CONTINUATION. SEE PLAN FOR SIZE.
2 2" CW BEL. GR. POC TO SITE DOMESTIC WATER. SEE CIVIL DWGS. FOR SITE CONTINUATION.
3 1-1/4" HPG BEL. GR. SEE SITE PLAN P100 FOR CONTINUATION.
4 1500 GALLON SAND-OIL INTERCEPTOR BEL. GR. SEE 15/P800 FOR DETAIL.
5 GAS PRESSURE REGULATOR IN VAULT. SEE 6/P800 FOR DETAIL.
6 SOV IN BOX. SEE 1/P800 FOR DETAIL (TYP.).
7 COTG. SEE 2/P800 FOR DETAIL (TYP.).
8 RWL BEL. GR. POC TO SITE STORM DRAIN. SEE CIVIL DWGS FOR SITE CONT.
9 OVERFLOW DRAIN. DAYLIGHT THRU WALL @+12" AFF WITH DOWNSPOUT COVER (DC-1).
10 TWO-WAY COTG. SEE 8/P800 FOR DETAIL. (TYP. FOR RWL'S).
11 RWL DROP IN COLUMN SPACE (OR IN WALL) TO BEL. GR. (TYP.).
12 3/4" CW DN. IN WALL TO HOSE BIBB @ +12" AFF.
13 1" GAS DN. AND CONNECT TO INFRARED HEATER W/ SOV AND DIRT LEG PER 4/P800 DETAIL. (115 MBH)
14 1/2" AIR DN. AND CONNECT TO AIR HOSE REEL W/ SOV. SEE SHT. A600 FOR EXACT LOCATION (TYP.).
15 3/4" CW DN. AND CONNECT TO WATER HOSE REEL W/ SOV. SEE SHT. A600 FOR EXACT LOCATION (TYP.).
16 3" S. W/ P-TRAP AND 2" V. OFFSET BEL. FLR FOR TRENCH DRAIN. PROVIDE 1/2" CW TRAP PRIMER CONNECTION.
17 2-1/2" GAS PIPE BEL. GR. IN 6" PVC SLEEVE. SEE 9/P800 FOR DETAIL.
18 1-1/2" GAS PRESSURE REGULATOR VENT PIPE BEL. GR.
19 2" GAS SLEEVE VTR W/ 90 ELL DN. CONNECT GPR-1 VENT TO GAS SLEEVE VENT IN WALL. PROVIDE INSECT SCREEN AT VTR OUTLET.
20 CONNECT CD TO IDU PUMP OUTLET, RISE UP IN ATTIC AND DROP DN. INTO TOP OF 3/4" GRAVITY CD MAIN.
21 3/4" CD DN. TO FLOOR SINK.
22 3/4" CD DN. TO LAV TAILPIECE. SEE 12/P800 FOR DETAIL.
23 2" GAS OVERHEAD AT PLATFORM. SEE 1/P201 FOR CONT.
24 1/2" CW BEL. FLR. FROM TRAP PRIMER TO DRAIN.
25 GAS SOV SIGN MOUNTED ON WALL, SEE 5/P800 FOR DETAIL.
26 1-1/4" CW OVERHEAD AT PLATFORM. SEE 1/P201 FOR CONT.
27 CONNECT CD TO IDU PUMP OUTLET & RISE UP TO PLATFORM LEVEL.
28 3/4" CW UP THRU ROOF TO HOSE BIBB. SEE P500 FOR CONT.
29 2" S. W/ P-TRAP AND 2" V. OFFSET BEL. FLR. OF RECESSED PIT FOR FLOOR DRAIN. PROVIDE 1/2" CW TP CONNECTION.
30 3" VENT & 3" AIR INTAKE UP W/ CONCENTRIC VENT THRU ROOF. SEE 10/P800 FOR DETAIL.
31 1/2" AIR DN. TO VEHICLE LIFT POWER UNIT. CONNECT W/ BALL VALVE AND PROVIDE AIR REGULATOR AND WATER SEPARATOR, RS-1. SEE SIMILAR DETAIL 7/P800 FOR PIPE DROP.
32 1/2" AIR DN. ALONG WALL FOR AIR SUPPLY TO DYNAMOMETER AND TO EMISSION INSPECTION SYSTEM. SEE 7/P800 FOR DETAIL.
33 1/2" AIR DN. ALONG WALL FOR AIR SUPPLY TO VEHICLE SCISSOR LIFT. SEE 7/P800 FOR DETAIL.
34 1/2" AIR BEL. FLR. OVER TO SCISSOR LIFT AIR CONNECTION. VERIFY EXACT LOCATION AND REQUIREMENTS. SLOPE AIR LINE TOWARDS PIT.
35 3" SCHEDULE 40 GALVANIZED STEEL PIPE DOWNSPOUT FROM ROOF GUTTER. DROP DN. ON EXTERIOR WALL TO BEL. GR.

KEYPLAN

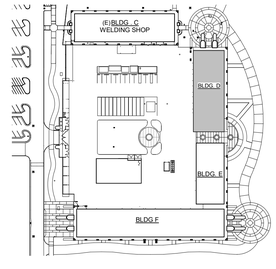

PLUMBING PLAN - BUILDING D 1/8" = 1'-0" 1

PLOT DATE: 11/1/2022 2:52:41 PM

FOR BID ONLY

Teter, LLP expressly reserves its common law copyright and other property rights in these plans. This document, the ideas and designs incorporated herein, as an instrument of professional service, is not to be used in whole or in part, for any other project without prior written authorization.

MARK	DATE	DESCRIPTION
	11/1/2022	DSA BACKCHECK

TETER, LLP
FRESNO HEADQUARTERS
VISALIA I BAKERSFIELD I MODESTO I SAN LUIS OBISPO
ARCHITECTS ENGINEERS CONNECTED

TULARE CAMPUS CTE
COLLEGE OF THE SEQUOIAS
4999 E. BARDSLEY AVE.
TULARE, CA

DRAWING TITLE
PLUMBING PLAN - BUILDING D

PROJECT NO.
21-12032

DRAWING
P200

\\tetr-file1\Users\yasser.ahmad_TETR\Documents\12032-P-COS Tulare CTE_yasser.ahmadF7SSY.rvt

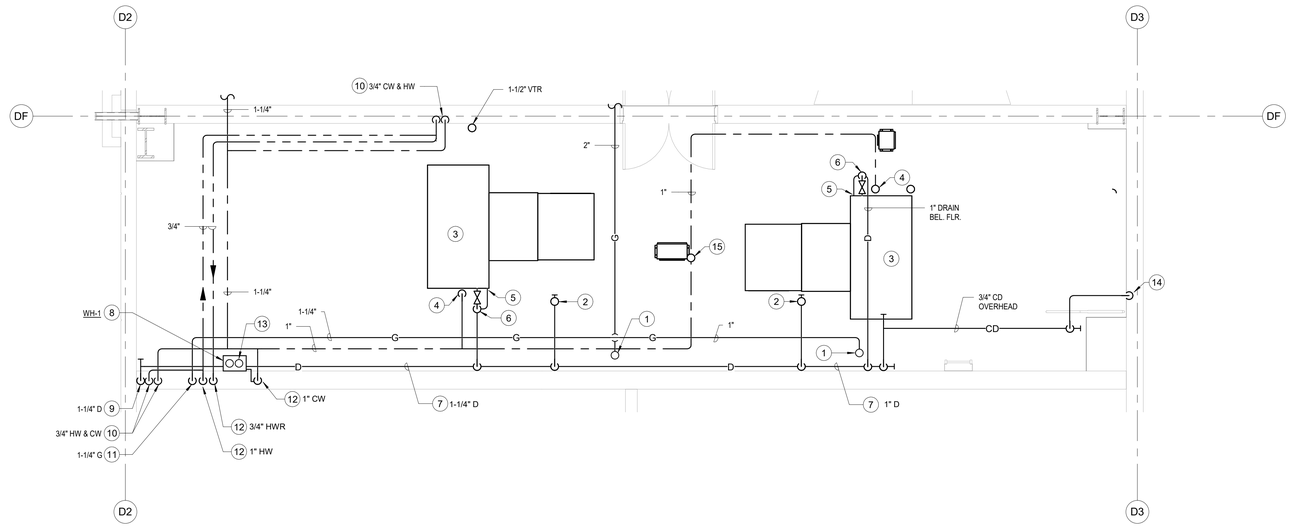

KEYNOTES

1. 1" GAS UP THRU ROOF TO HC UNIT. SEE P500 FOR CONT.
2. 3/4" CD DROP FROM HC UNIT ON ROOF. OFFSET OVERHEAD AND DROP DN. ALONG WALL.
3. EVAP. COOLER ON # PLATFORM. SEE MECH DWGS.
4. 1" CW DN. AND CONNECT TO EVAP. COOLER W/ SOV PER MANUFACTURER'S INSTALLATION INSTRUCTIONS.
5. CONNECT 1" OVERFLOW DRAIN AND 1" MAIN DRAIN LINES TO EVAP COOLER. PROVIDE SOV IN MAIN DRAIN BEFORE OVERFLOW DRAIN CONNECTION, AND PROVIDE TRAP IN MAIN DRAIN AFTER THE OVERFLOW CONNECTION PER MANUFACTURER'S INSTALLATION INSTRUCTIONS.
6. 1" DRAIN LINE DN. THRU PLATFORM FLOOR & OFFSET BETWEEN FLOOR JOISTS.
7. OFFSET DRAIN LINE BELOW PLATFORM CEILING ALONG WALL.
8. TANKLESS GAS WATER HEATER MOUNTED ON WALL. SEE 13/P800 FOR DETAIL.
9. 1-1/4" DRAIN LINE DN. IN WALL TO DISCHARGE INTO FLOOR SINK. SEE 1/P300 FOR CONT.
10. 3/4" CW & HW TO WASH SINK BELOW. SEE 1/P300 FOR CONT.
11. 1-1/4" GAS DN. TO WATER HEATER.
12. 1" CW DN, 1" HW UP, & 3/4" HWR DN. TO WATER HEATER.
13. 3" VENT & 3" AIR INTAKE UP THRU ROOF WITH CONCENTRIC VENT KIT PER 10/P800 DETAIL.
14. CD UP FROM IDU BELOW & DROP DN. INTO TOP OF 3/4" GRAVITY CD OVERHEAD.
15. 3/4" CW UP THRU ROOF TO HOSE BIBB. PROVIDE SOV BEL. ROOF. SEE P500 FOR CONT.

NORTH

KEYPLAN

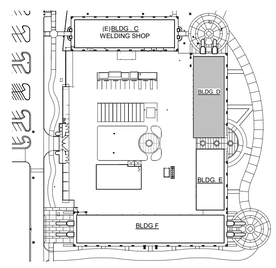

PLUMBING PLATFORM PLAN - BULDING D | 1/4" = 1'-0" | 1

PLOT DATE: 11/1/2022 2:52:42 PM

FOR BID ONLY

Teter, LLP expressly reserves its common law copyright and other property rights in these plans. This document, the ideas and designs incorporated herein, as an instrument of professional service, is not to be used in whole or part, for any other project without prior written authorization.

MARK	DATE	DESCRIPTION
	11/1/2022	DSA BACKCHECK

TETER, LLP
FRESNO HEADQUARTERS
VISALIA | BAKERSFIELD | MODESTO | SAN LUIS OBISPO
ARCHITECTS ENGINEERS CONNECTED

TULARE CAMPUS CTE
COLLEGE OF THE SEQUOIAS
4999 E. BARDSLEY AVE.
TULARE, CA

DRAWING TITLE
PLUMBING PLATFORM PLAN - BUILDING D

PROJECT NO.
21-12032

DRAWING
P201

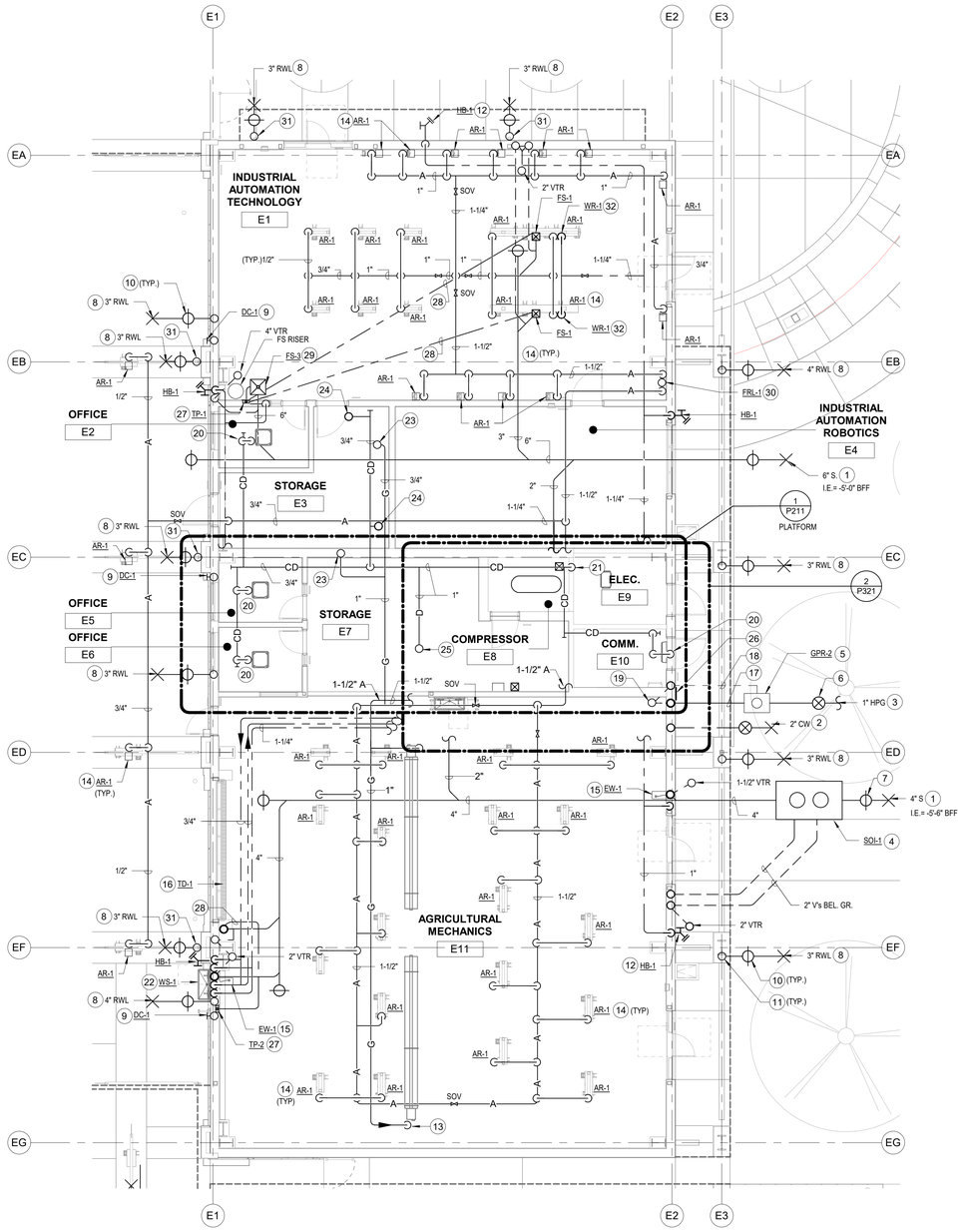

KEYNOTES

1 S. BEL. GR. POC TO SITE SANITARY SEWER. SEE CIVIL DWGS. FOR SITE CONTINUATION. SEE PLAN FOR SIZE.
2 2" CW BEL. GR. POC TO SITE DOMESTIC WATER. SEE CIVIL DWGS. FOR SITE CONTINUATION.
3 1" HPG BEL. GR. SEE SITE PLAN P100 FOR CONTINUATION.
4 1500 GALLON SAND-OIL INTERCEPTOR. SEE 15/P800 FOR DETAIL.
5 GAS PRESSURE REGULATOR IN VAULT. SEE 6/P800 FOR DETAIL.
6 SHUT-OFF VALVE IN BOX. SEE 1/P800 FOR DETAIL (TYP.).
7 COTG. SEE 2/P800 FOR DETAIL (TYP.).
8 RWL BEL. GR. POC TO SITE STORM DRAIN. SEE CIVIL DWGS FOR SITE CONT.
9 OVERFLOW DRAIN. DAYLIGHT THRU WALL @+12" AFF WITH DOWNSPOUT COVER (DC-1).
10 TWO-WAY COTG. SEE 8/P800 FOR DETAIL. (TYP. FOR RWL'S).
11 RWL DROP IN COLUMN SPACE (OR IN WALL) TO BEL. GR. (TYP.).
12 3/4" CW DN. IN WALL TO HOSE BIBB @ +12" AFF. (TYP.)
13 3/4" GAS DN. AND CONNECT TO INFRARED HEATER W/ SOV AND DIRT LEG PER 4/P800 DETAIL. (80 MBH)
14 1/2" AIR DN. AND CONNECT TO AIR HOSE REEL W/ SOV. (TYP.). REFER TO SHT. A610 FOR EXACT LOCATION (TYP.).
15 3/4" CW DN. , 2" S. DN. & 1-1/2" VR FOR EMERGENCY EYEWASH.
16 3" S. W/ P-TRAP AND 2" V. OFFSET BEL. FLR FOR TRENCH DRAIN. PROVIDE 1/2" CW TRAP PRIMER CONNECTION.
17 2" GAS PIPE BEL. GR. IN 4" PVC SLEEVE. SEE 9/P800 FOR DETAIL.
18 1-1/2" GAS PRESSURE REGULATOR VENT PIPE BEL. GR.
19 2" GAS SLEEVE VTR W/ 90 ELL DN. CONNECT GPR-1 VENT TO GAS SLEEVE VENT IN WALL. PROVIDE INSECT SCREEN AT ATR OUTLET.
20 CONNECT CD TO IDU PUMP OUTLET, RISE UP IN ATTIC AND DROP DN. INTO TOP OF 3/4" GRAVITY CD MAIN.
21 1" CD DN. TO FLOOR SINK.
22 3/4" CW & HW DN. , 2" S. DN. AND 1-1/2" VR. FOR (2) STATION WASH SINK.
23 3/4" GAS UP THRU ROOF TO HC UNIT. SEE P510 FOR CONT.
24 3/4" CD DN. THRU ROOF FROM HC UNIT.
25 1"DRAIN FROM EVAP COOLER ABV. OFFSET BETWEEN FLOOR JOISTS OF PLATFORM OVER TO WALL.
26 GAS SOV SIGN MOUNTED ON WALL. SEE 5/P800 FOR DETAIL.
27 1/2" CW W/ SOV TO ELECTRONIC TRAP PRIMER IN WALL BEHIND ACCESS DOOR @ +12" AFF.
28 1/2" CW BEL. FLR. FROM TRAP PRIMER TO DRAIN.
29 6" S. W/ 6" P-TRAP AND 4" V. OFFSET BEL. FLR. FOR FLOOR SINK. PROVIDE 1/2" CW TP CONNECTION.
30 1-1/2" AIR DN. TO COMBINATION AIR FILTER/ REGULATOR/ LUBRICATOR @ +5'-0" AFF. SEE 7/P800 FOR SIMILAR DETAIL.
31 3" SCHEDULE 40 GALVANIZED STEEL PIPE DOWNSPOUT FROM ROOF GUTTER. DROP DN. ON EXTERIOR WALL TO BEL. GR.
32 3/4" CW DN. & CONNECT TO WATER HOSE REEL W/ SOV. SEE SHT. A610 FOR EXACT LOCATION. (TYP.)

NORTH

KEYPLAN

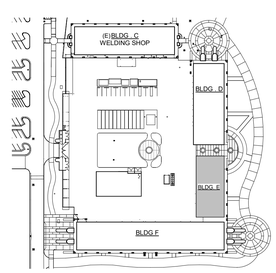

FOR BID ONLY

Teter, LLP expressly reserves its common law copyright and other property rights in these plans. This document, the ideas and designs incorporated herein, as an instrument of professional service, is not to be used in whole or part, for any other project without prior written authorization.

MARK	DATE	DESCRIPTION
	11/1/2022	DSA BACKCHECK

TETER, LLP
FRESNO HEADQUARTERS
VISALIA | BAKERSFIELD | MODESTO | SAN LUIS OBISPO
ARCHITECTS ENGINEERS CONNECTED

TULARE CAMPUS CTE
COLLEGE OF THE SEQUOIAS
4999 E. BARDSLEY AVE.
TULARE, CA

DRAWING TITLE
PLUMBING PLAN - BUILDING E

PROJECT NO.
21-12032

DRAWING
P210

PLOT DATE: 11/1/2022 2:53:02 PM
\\tet-file1\Users\yasser.ahmad_TETR\Documents\12032-P-COS Tulare CTE_yasser.ahmadF7SSY.rvt

\\tetr-file1\Users\yasser.ahmad_TETR\Documents\12032-P-COS Tulare CTE_yasser.ahmadF7SSY.rvt

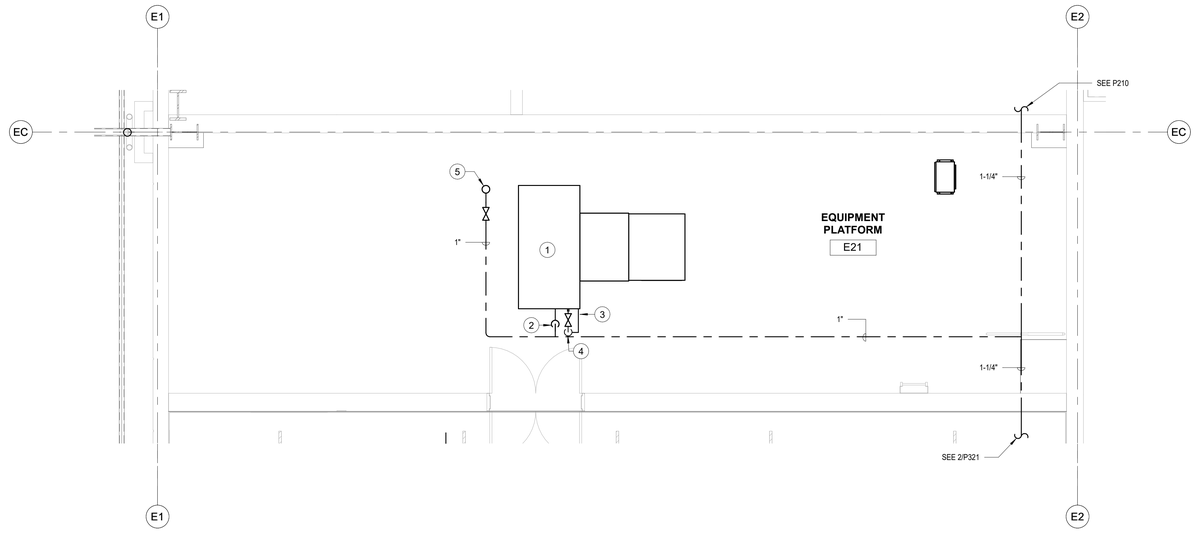

KEYNOTES

1. EVAP COOLER ON PLATFORM. SEE MECH. DWGS.
2. 1" CW DN. AND CONNECT TO EVAP. COOLER WITH SOV PER MANUFACTURER'S INSTALLATION INSTRUCTIONS.
3. CONNECT 1" OVERFLOW DRAIN AND 1" MAIN DRAIN LINES TO EVAP COOLER. PROVIDE SOV IN MAIN DRAIN BEFORE OVERFLOW DRAIN CONNECTION, AND PROVIDE TRAP IN MAIN DRAIN AFTER THE OVERFLOW CONNECTION PER MANUFACTURER'S INSTALLATION INSTRUCTIONS.
4. 1" DRAIN LINE DN. THRU PLATFORM FLOOR & OFFSET BETWEEN JAOISTS. SEE P210 FOR CONT.
5. 3/4" CW UP THRU ROOF TO HOSE BIBB. SEE P510 FOR CONT.

NORTH

KEYPLAN

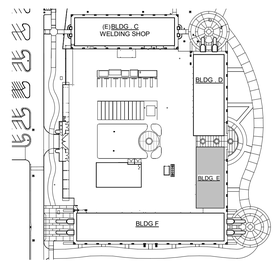

PLUMBING PLATFORM PLAN - BULDING E | 1/4" = 1'-0" | 1

PLOT DATE: 11/1/2022 2:53:03 PM

FOR BID ONLY

Teter, LLP expressly reserves its common law copyright and other property rights in these plans. This document, the ideas and designs incorporated herein, as an instrument of professional service, is not to be used in whole or part, for any other project without prior written authorization.

MARK	DATE	DESCRIPTION
	11/1/2022	DSA BACKCHECK

TETER, LLP
FRESNO HEADQUARTERS
VISALIA | BAKERSFIELD | MODESTO | SAN LUIS OBISPO
ARCHITECTS ENGINEERS CONNECTED

TULARE CAMPUS CTE
COLLEGE OF THE SEQUOIAS
4999 E. BARDSLEY AVE.
TULARE, CA

DRAWING TITLE
PLUMBING PLATFORM PLAN - BUILDING E

PROJECT NO.
21-12032

DRAWING
P211

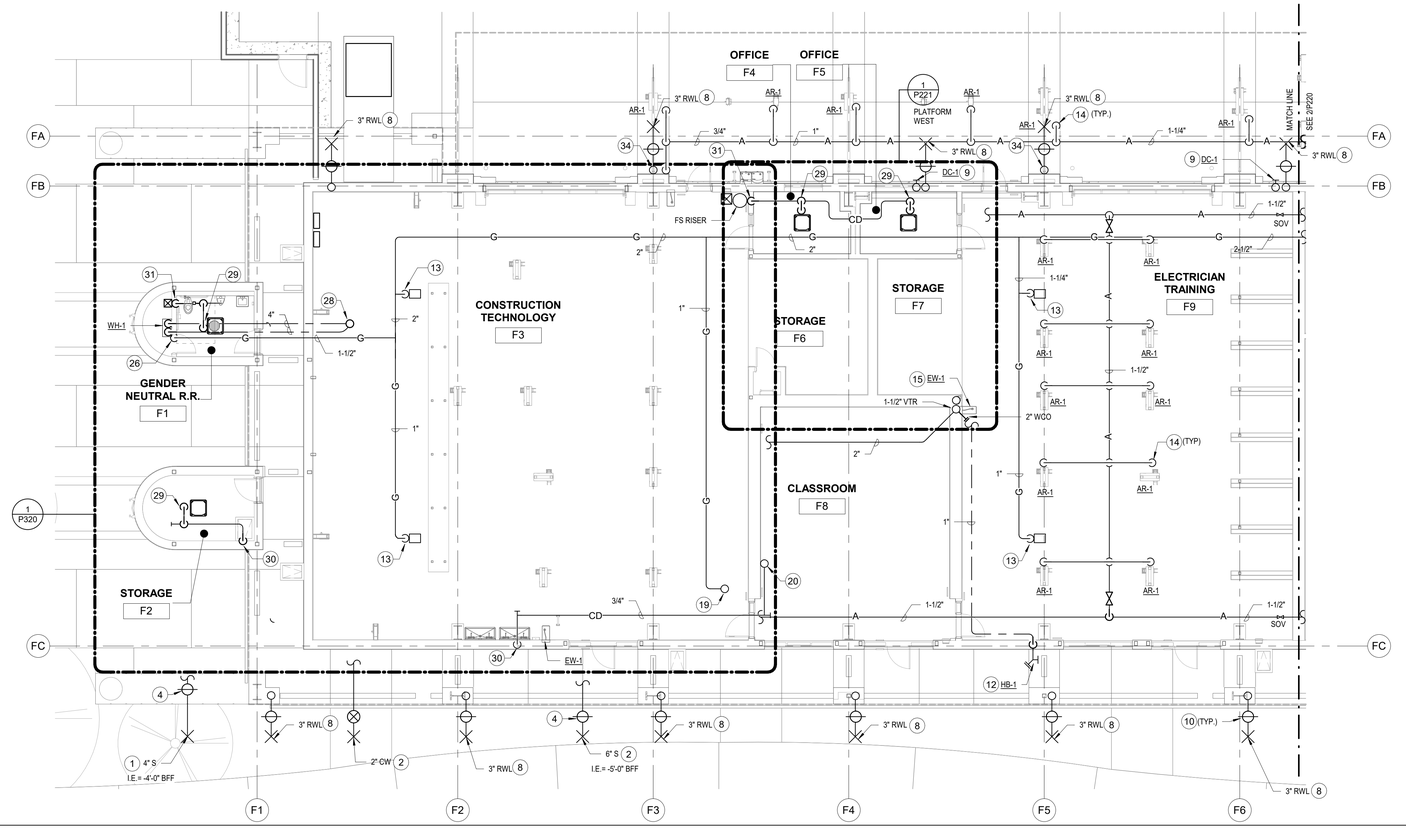

PLUMBING PLAN - BUILDING F

1/8" = 1'-0" | 1

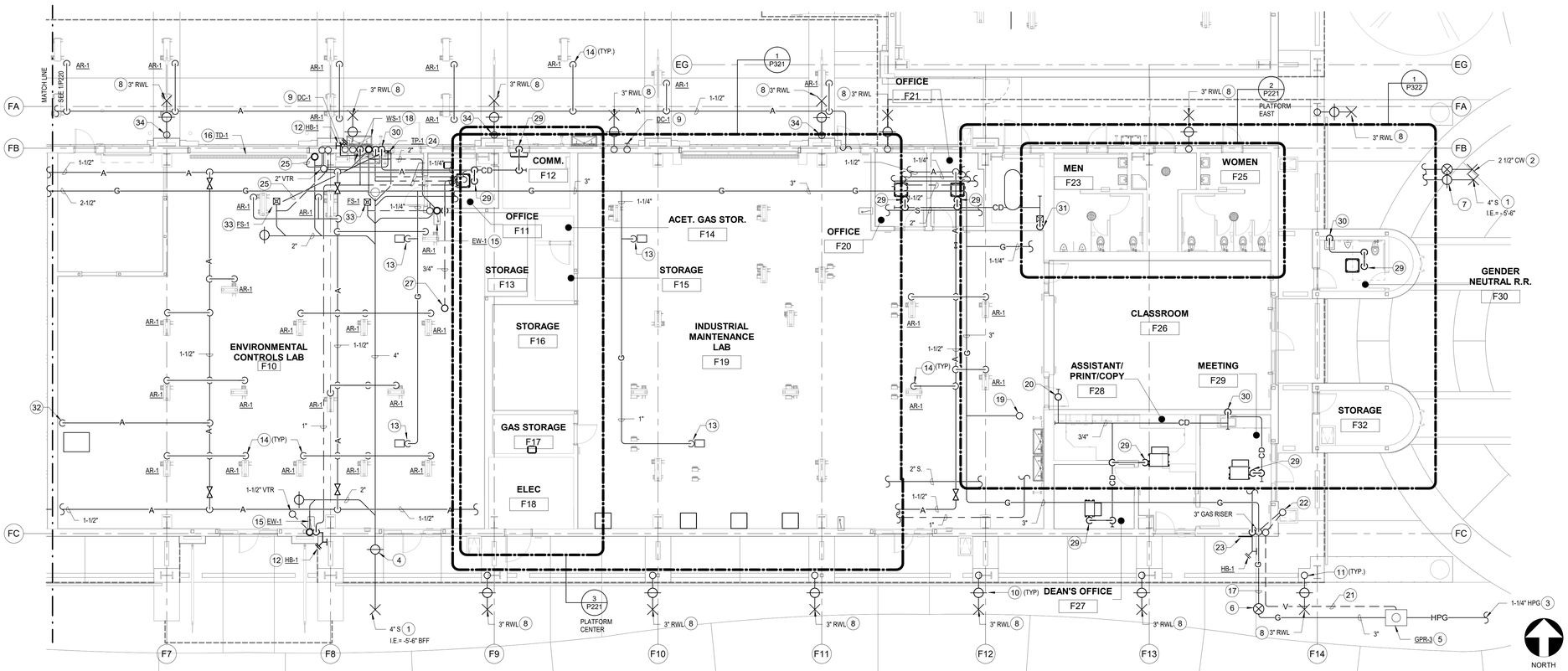

PLUMBING PLAN - BUILDING F

1/8" = 1'-0" | 2

KEYNOTES

1. 4" S. BEL. GR. POC TO SITE SANITARY SEWER. SEE CIVIL DWGS. FOR SITE CONTINUATION.
2. CW BEL. GR. POC TO SITE DOMESTIC WATER. SEE CIVIL DWGS. FOR SITE CONTINUATION.
3. 1-1/4" HPG BEL. GR. SEE SITE PLAN P100 FOR CONTINUATION.
4. 4" COTG. SEE 2/P800 FOR DETAIL.
5. GAS PRESSURE REGULATOR IN VAULT. SEE 6/P800 FOR DETAIL.
6. SHUT-OFF VALVE IN BOX. SEE 1/P800 FOR DETAIL (TYP.).
7. COTG. SEE 2/P800 FOR DETAIL (TYP.).
8. RWL BEL. GR. POC TO SITE STORM DRAIN. SEE CIVIL DWGS FOR SITE CONT.
9. OVERFLOW DRAIN. DAYLIGHT THRU WALL @+12" AFF WITH DOWNSPOUT COVER (DC-1).
10. TWO-WAY COTG. SEE 8/P800 FOR DETAIL. (TYP. FOR RWL'S).
11. RWL DROP IN COLUMN SPACE (OR IN WALL) TO BEL. GR. (TYP.).
12. 3/4" CW DN. IN WALL TO HOSE BIBB @ +12" AFF.
13. 1" GAS DN. AND CONNECT TO INFRARED HEATER W/ SOV AND DIRT LEG PER DETAIL 4/P800 (80 MBH).
14. 1/2" AIR DN. AND CONNECT TO AIR HOSE REEL W/ SOV. SEE SHT. A620 FOR EXACT LOCATION (TYP.).
15. 3/4" CW DN. , 2" S. DN. & 1-1/2" VR FOR EMERGENCY EYEWASH.
16. 3" S. W/ P-TRAP AND 2" V. OFFSET BEL. FLR FOR TRENCH DRAIN. PROVIDE 1/2" CW TRAP PRIMER CONNECTION.
17. 3" GAS PIPE BEL. GR. IN 6" PVC SLEEVE. SEE 9/P800 FOR DETAIL.
18. 3/4" CW & HW DN. , 2" S. DN. AND 1-1/2" VR. FOR (2) STATION WASH SINK.
19. 1" GAS UP THRU ROOF TO HC UNIT. SEE P510 FOR CONT.
20. 3/4" CD DN. THRU ROOF FROM HC UNIT.
21. 1-12" GAS PRESSURE REGULATOR VENT PIPE BEL. GR.
22. 2" GAS SLEEVE VTR W/ 90 ELL DN. CONNECT GPR-1 VENT TO GAS SLEEVE VENT IN WALL. PROVIDE INSECT SCREEN AT VTR OUTLET.
23. GAS SOV SIGN MOUNTED ON WALL. SEE 5/P800 FOR DETAIL.
24. 1/2" CW W/ SOV TO ELECTRONIC TRAP PRIMER IN WALL BEHIND ACCESS DOOR @ +12" AFF.
25. 1/2" CW BEL. FLR. FROM TRAP PRIMER TO DRAIN (TYP.).
26. 1-1/2" GAS DN. TO WATER HEATER.
27. 3/4" CW UP THRU ROOF TO HOSE BIBB. SEE P520 FOR CONT.
28. 4" VENT & 4" AIR INTAKE FOR WATER HEATER. OFFSET OVERHEAD & UP THRU ROOF W/ CONCENTRIC VENT KIT. SEE 10/P800 FOR DETAIL.
29. CONNECT CD TO IDU PUMP OUTLET, RISE UP INTO ATTIC AND DROP DN. INTO TOP OF 3/4" GRAVITY CD MAIN.
30. 3/4" CD DN. TO TAILPIECE OF SINK. SEE 12/P800 FOR DETAIL.
31. 3/4" CD DN. TO FLOOR SINK.
32. 1/2" AIR DN. TO SPOT WELDER. SEE 7/P800 FOR DETAIL.
33. 2" S W/ P-TRAP AND 2" V. OFFSET BEL. FLR. FOR FLOOR SINK. PROVIDE 1/2" CW TP CONNECTION.
34. 3" SCHEDULE 40 GALVANIZED STEEL PIPE DOWNSPOUT FROM ROOF GUTTER. DROP DN. ON EXTERIOR WALL TO BEL. GR.

KEYPLAN

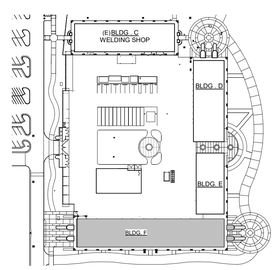

FOR BID ONLY

Teter, LLP expressly reserves its common law copyright and other property rights in these plans. This document, the ideas and designs incorporated herein, as an instrument of professional service, is not to be used in whole or in part, for any other project without prior written authorization.

MARK	DATE	DESCRIPTION
	11/1/2022	DSA BACKCHECK

TETER, LLP
FRESNO HEADQUARTERS
VISALIA | BAKERSFIELD | MODESTO | SAN LUIS OBISPO
ARCHITECTS ENGINEERS CONNECTED

TULARE CAMPUS CTE
COLLEGE OF THE SEQUOIAS
4999 E. BARDSLEY AVE.
TULARE, CA

DRAWING TITLE
PLUMBING PLAN - BUILDING F

PROJECT NO.
21-12032

DRAWING
P220

PLOT DATE: 11/1/2022 2:54:02 PM

\\tetr-file1\Users\yasser.ahmad_TETR\Documents\12032-P-COS Tulare CTE_yasser.ahmadF7SSY.rvt

\\tetr-file1\Users\yasser.ahmad_TETR\Documents\12032-P-COS Tulare CTE_yasser.ahmadF7SSY.rvt

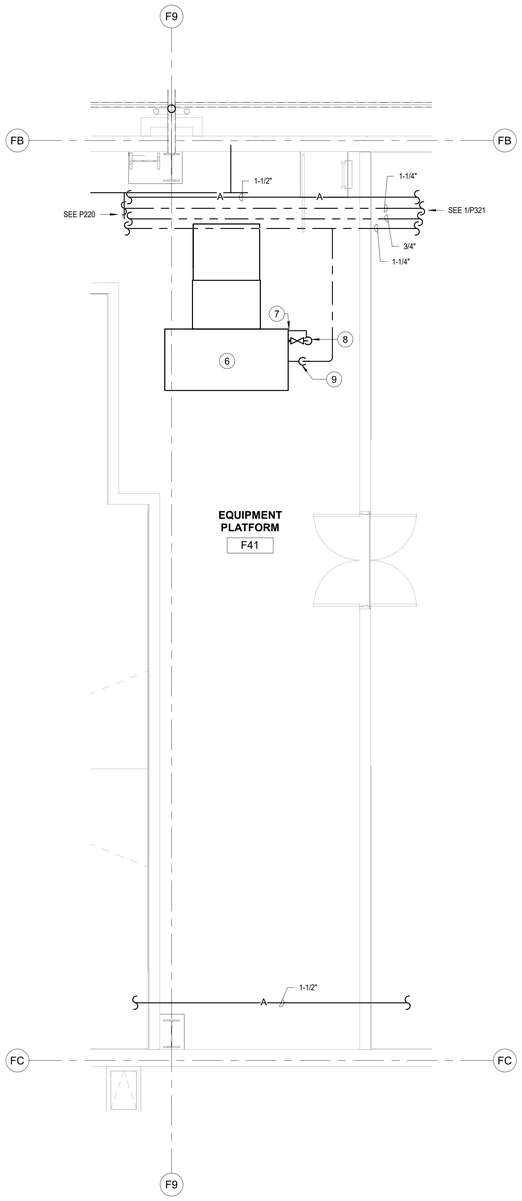

NORTH

PLUMBING PLATFORM CENTER – BULDING F | 1/4" = 1'-0" | 3

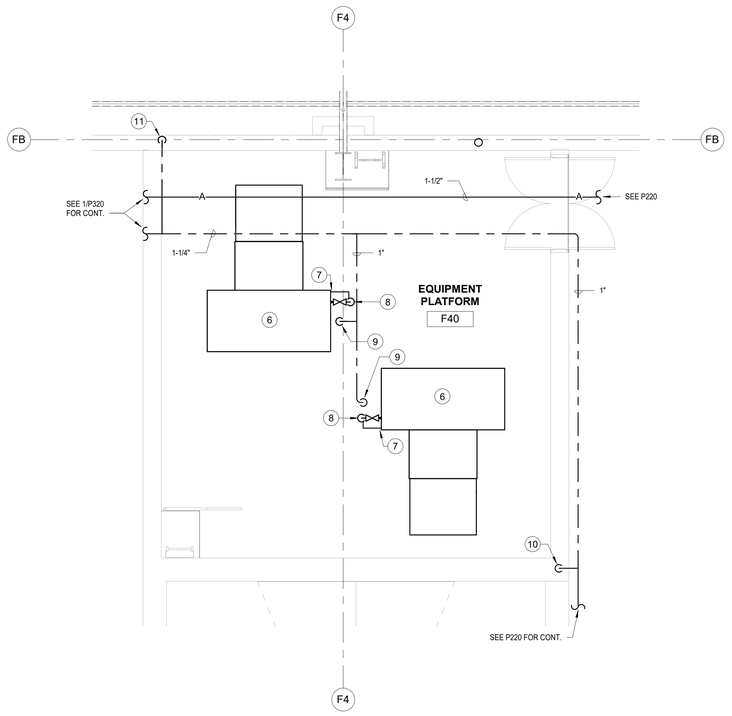

NORTH

PLUMBING PLATFORM WEST – BULDING F | 1/4" = 1'-0" | 1

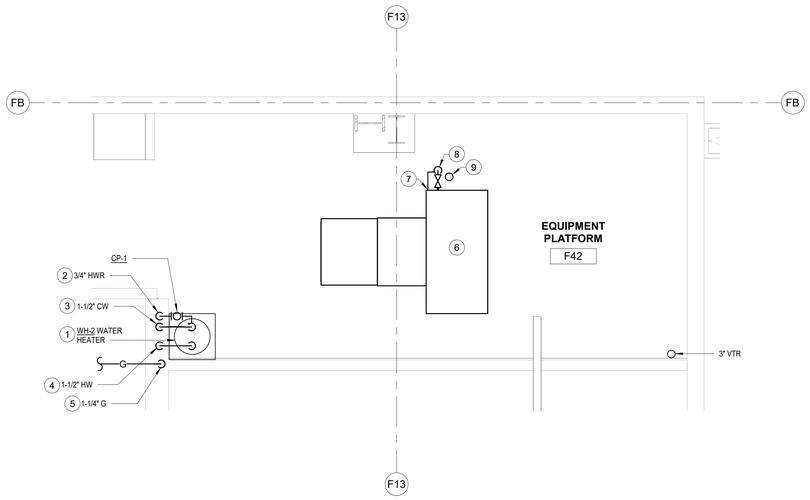

NORTH

PLUMBING PLATFORM EAST – BULDING F | 1/4" = 1'-0" | 2

KEYNOTES

1 WATER HEATER ON PLATFORM FLOOR. SEE 16/P800 FOR DETAIL.
2 3/4" HWR UP FROM BEL. TO IN-LINE CIRCULATING PUMP AT WATER HEATER.
3 1-1/2" CW UP FROM BEL. TO WATER HEATER.
4 1-1/2" HW DN. TO BEL. PLATFORM FLOOR. SEE 1/P322 FOR CONT.
5 1-1/4" GAS DN. TO WATER HEATER.
6 EVAP COOLER ON PLATFORM. SEE MECH DWGS.
7 CONNECT 1" OVERFLOW DRAIN AND 1" MAIN DRAIN LINES TO EVAP COOLER. PROVIDE SOV IN MAIN DRAIN BEFORE OVERFLOW DRAIN CONNECTION, AND PROVIDE TRAP IN MAIN DRAIN AFTER THE OVERFLOW CONNECTION PER MANUFACTURER'S INSTALLATION INSTRUCTIONS.
8 1" DRAIN LINE DN. THRU PLATFORM FLOOR. SEE 1/P322 FOR CONT.
9 1" CW DN. AND CONNECT TO EVAP. COOLER W/ SOV PER MANUFACTURER'S INSTALLATION INSTRUCTIONS.
10 3/4" CW DN. TO EYEWASH. SEE P220 FOR CONT.
11 3/4" CW DN. TO DRINKING FOUNTAIN. SEE 1/P322 FOR DETAIL.

KEYPLAN

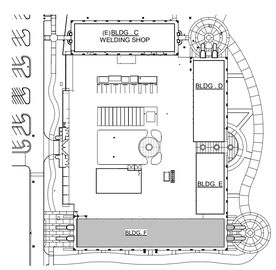

FOR BID ONLY

Teter, LLP expressly reserves its common law copyright and other property rights in these plans. This document, the ideas and designs incorporated herein, as an instrument of professional service, is not to be used in whole or part, for any other project without prior written authorization.

MARK	DATE	DESCRIPTION
	11/1/2022	DSA BACKCHECK

TETER, LLP
FRESNO HEADQUARTERS
VISALIA | BAKERSFIELD | MODESTO | SAN LUIS OBISPO
ARCHITECTS ENGINEERS CONNECTED

TULARE CAMPUS CTE
COLLEGE OF THE SEQUOIAS
4999 E. BARDSLEY AVE.
TULARE, CA

DRAWING TITLE
PLUMBING PLATFORM PLANS – BULDING F

PROJECT NO.
21-12032

DRAWING
P221

PLOT DATE: 11/1/2022 2:54:05 PM

\\tet-file1\Users\yasser.ahmad_TETER\Documents\12032-P-COS Tulare CTE_yasser.ahmadF7SSY.rvt

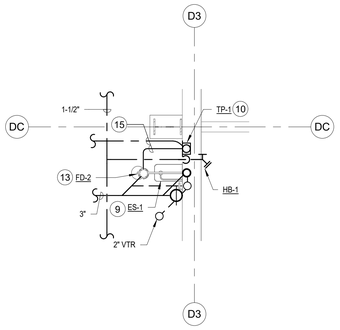

ENLARGED PLUMBING PLAN - BUILDING D 1/4" = 1'-0" | 4

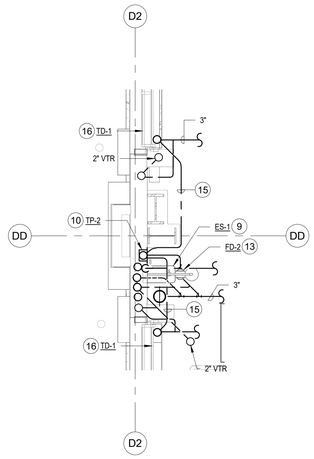

ENLARGED PLUMBING PLAN - BUILDING D 1/4" = 1'-0" | 3

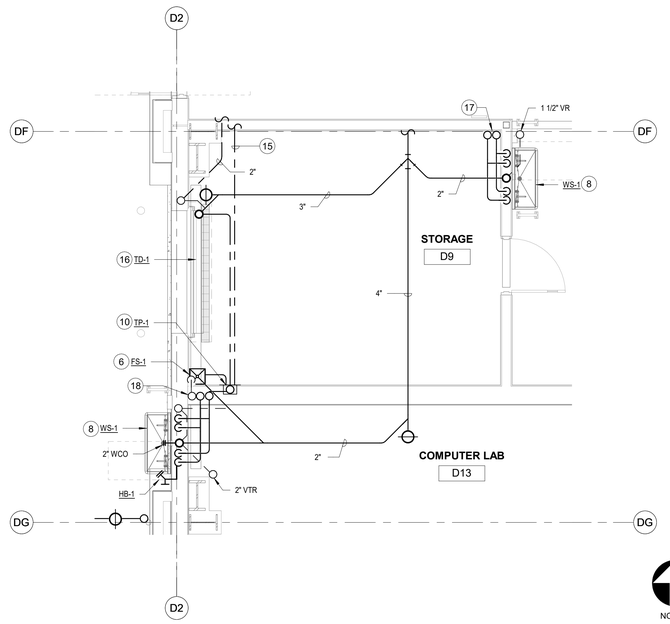

ENLARGED PLUMBING PLAN - BUILDING D 1/4" = 1'-0" | 1

KEYNOTES

1 AIR COMPRESSOR ON HOUSEKEEPING PAD. SEE 14/P800 FOR DETAIL.
2 1-1/2" AIR UP FROM AIR COMPRESSOR.
3 1-1/2" CW DN., 4" S. DN. AND 2" VR FOR WATER CLOSET.
4 1" CW DN., 2" S. DN. AND 2" VR W/ WCO ABOVE FOR URINAL.
5 1/2" CW & HW DN., 2" S. DN., & 1-1/2" VR FOR LAVATORY.
6 2" S. W/ P-TRAP & 1-1/2" V. OFFSET BEL. FLR FOR FLOOR DRAIN (OR FLOOR SINK). PROVIDE 1/2" CW TP CONNECTION.
7 1/2" CW BEL. FLR. FROM FLUSH VALVE TO FLOOR DRAIN.
8 3/4" CW & HW DN., 2" S. DN. AND 1-1/2" VR FOR 2-STATION WASH SINK.
9 1-1/4" CW DN., 2" S. DN. & 1-1/2" VR FOR EMERGENCY SHOWER & EYEWASH. BRANCH 1/2" CW TO TRAP PRIMER W/ SOV.
10 1/2" CW W/ SOV TO ELECTRONIC TRAP PRIMER IN WALL BEHIND ACCESS PANEL @+12" AFF.
11 3/4" CW DN., 2" S. DN. AND 1-1/2" VR FOR DRINKING FOUNTAIN & BOTTLE FILLER. BRANCH 1/2" CW TO TRAP PRIMER W/ SOV.
12 2" CW DN. IN WALL TO SOV BEHIND WALL ACCESS DOOR @ +5'-0" AFF ACCESS FROM RESTROOM SIDE. RISE W/ 2" CW TO ABV. CLG. OVER TO FIXTURES.
13 3" S W/ P-TRAP & 2" V OFFSET BEL. FLR FOR FLOOR DRAIN. PROVIDE 1/2" CW TP CONNECTION.
14 1-1/4" AIR LINE BEL. CANOPY ROOF TO OUTSIDE AIR REELS. SEE P200 FOR CONT.
15 1/2" CW BEL. FLR. FROM TRAP PRIMER TO DRAIN.
16 3" S. W/ P-TRAP AND 2" V. OFFSET BEL. FLR FOR TRENCH DRAIN. PROVIDE 1/2" CW TRAP PRIMER CONNECTION.
17 3/4" CW & HW DN. FROM ABV. AND OFFSET BETWEEN JOISTS ABV. CLG TO WASH SINK.
18 1-1/4" DRAIN DN. AND DISCHARGE INTO FLOOR SINK W/ 90 DEGREE ELL DN.
19 3" VENT & 3" AIR INTAKE UP FROM WATER HEATER. SEE P200 FOR CONT.
20 1-1/4" GAS DN. TO WATER HEATER.
21 1-1/4" CW DN. & 1-1/4" HW UP FROM WATER HEATER.
22 3/4" HWR DN. TO WATER HEATER.
23 6" S. W/ 6" P-TRAP & 4" V. OFFSET BEL. FLR. FOR FLOOR SINK. PROVIDE 1/2" CW TP CONNECTION.
24 1/2" AIR DN. ALONG WALL FOR TIRE CHANGER. SEE 7/P800 FOR DETAIL.
25 1/2" AIR DN. ALONG WALL FOR WHEEL BALANCER. SEE 7/P800 FOR DETAIL.
26 1/2" AIR DN. AND CONNECT TO DRIVE TRAIN AIR DISPLAY. SEE 7/P800 FOR DETAIL. CONFIRM EXACT LOCATION OF AIR DROP W/ OWNER.
27 3/4" CW & HW DN., 2" S DN. W/ WCO, & 1-1/2" VR FOR SINK.
28 TANKLESS GAS WATER HEATER MOUNTED ON WALL. SEE 13/P800 FOR DETAIL.

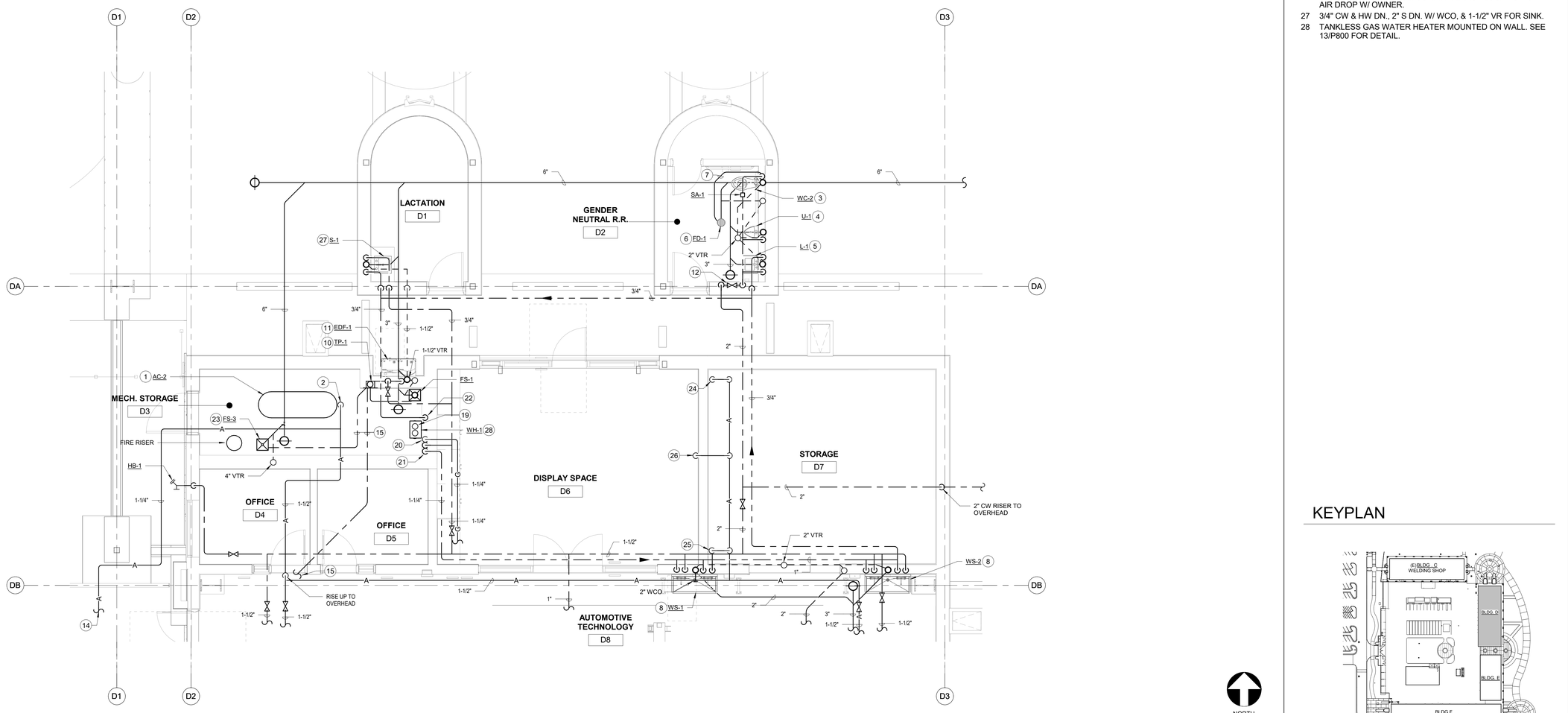

ENLARGED PLUMBING PLAN - BUILDING D 1/4" = 1'-0" | 2

KEYPLAN

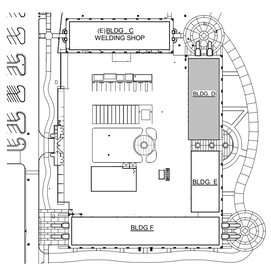

FOR BID ONLY

Teter, LLP expressly reserves its common law copyright and other property rights in these plans. This document, the ideas and designs incorporated herein, as an instrument of professional service, is not to be used in whole or in part, for any other project without prior written authorization.

MARK	DATE	DESCRIPTION
	11/1/2022	DSA BACKCHECK

TETER, LLP
ARCHITECTS ENGINEERS CONNECTED
FRESNO HEADQUARTERS
VISALIA I BAKERSFIELD I MODESTO I SAN LUIS OBISPO

TULARE CAMPUS CTE
COLLEGE OF THE SEQUOIAS
4999 E. BARDSLEY AVE.
TULARE, CA

DRAWING TITLE
ENLARGED PLUMBING PLAN - BUILDING D

PROJECT NO.
21-12032

DRAWING
P300

PLOT DATE: 11/1/2022 2:54:21 PM

\\tet-file1\Users\yasser.ahmad_TETER\Documents\12032-P-COS Tulare CTE_yasser.ahmadF7SSY.rvt

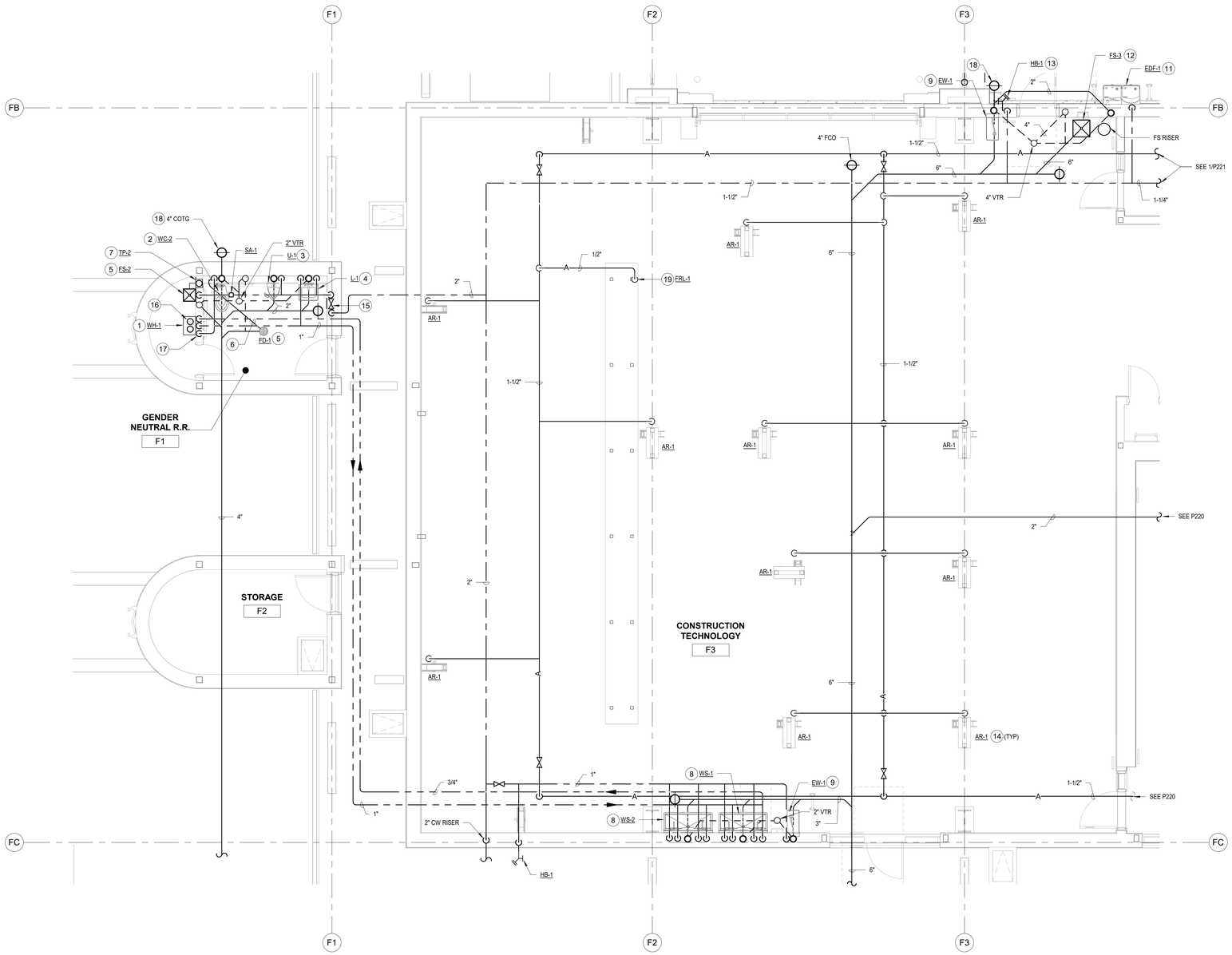

KEYNOTES

1 TANKLESS GAS WATER HEATER MOUNTED ON WALL. SEE 13/P800 FOR DETAIL.
2 1-1/2" CW DN., 4" S. DN. AND 2" VR FOR WATER CLOSET.
3 1" CW DN., 2" S. DN. & 2" VR W/ WCO ABOVE FOR URINAL.
4 1/2" CW & HW DN., 2" S DN. & 1-1/2" VR FOR LAVATORY.
5 2" S W/ P-TRAP & 1-1/2" V. OFFSET BEL. FLR. FOR FLOOR DRAIN (OR FLOOR DRAIN). PROVIDE 1/2" CW TP CONNECTION.
6 1/2" CW BEL. FLR. FROM FLUSH VALVE TO FLOOR DRAIN.
7 ELECTRONIC TRAP PRIMER IN WALL BOX @+12" AFF. ROUTE 1/2" CW W/ SOV TO INLET. ROUTE 1/2" CW BEL. FLR. TO FLOOR SINK.
8 3/4" CW & HW DN., 2" S. DN. AND 1 1/2" VR FOR 2-STATION WASH SINK.
9 3/4" CW DN., 2" S DN., & 1-1/2" VR FOR EYEWASH.
10 NOT USED.
11 3/4" CW DN., 2" S. DN. W/ WCO, & 1-1/2" VR FOR DRINKING FOUNTAIN W/ BOTTLE FILLER.
12 6" S. W/ 6" P-TRAP AND 4" V OFFSET BEL. FLR. FOR FLOOR SINK. PROVIDE 1/2" CW TP CONNECTION.
13 3/4" CW DN. TO EXTERIOR HOSE BIBB @ +12" AFF.
14 1/2" AIR DN. AND CONNECTS TO AIR HOSE REEL W/ SOV (TYP.)
15 2" CW DN. TO SOV IN WALL BEHIND ACCESS DOOR @ +5'-0" AFF. ACCESS FROM RESTROOM SIDE. RISE W/ 2" CW TO ABV. CLG OVER TO FIXTURES.
16 4" VENT AND 4" AIR INTAKE UP FROM WATER HEATER. SEE P220 FOR CONT.
17 1" HW UP, 1" CW DN. & 3/4" HWR DN. TO WATER HEATER.
18 COTG. SEE 2/P800 FOR DETAIL.
19 1/2" AIR DROP FOR DRILL SANDER. PROVIDE COMBINATION FILTER/ REGULATOR/ LUBRICATOR UNIT. SEE 7/P800 FOR DETAIL.

NORTH

KEYPLAN

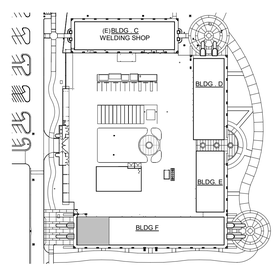

ENLARGED PLUMBING FLOOR PLAN - BUILDING F | 1/4" = 1'-0" | 1

FOR BID ONLY

Teter, LLP expressly reserves its common law copyright and other property rights in these plans. This document, the ideas and designs incorporated herein, as an instrument of professional service, is not to be used in whole or part, for any other project without prior written authorization.

MARK	DATE	DESCRIPTION
	11/1/2022	DSA BACKCHECK

TETER, LLP
ARCHITECTS ENGINEERS CONNECTED
FRESNO HEADQUARTERS
VISALIA I BAKERSFIELD I MODESTO I SAN LUIS OBISPO

TULARE CAMPUS CTE
COLLEGE OF THE SEQUOIAS
4999 E. BARDSLEY AVE.
TULARE, CA

DRAWING TITLE
ENLARGED PLUMBING FLOOR PLAN - BUILDING F

PROJECT NO.
21-12032

DRAWING
P320

PLOT DATE: 11/1/2022 2:54:29 PM

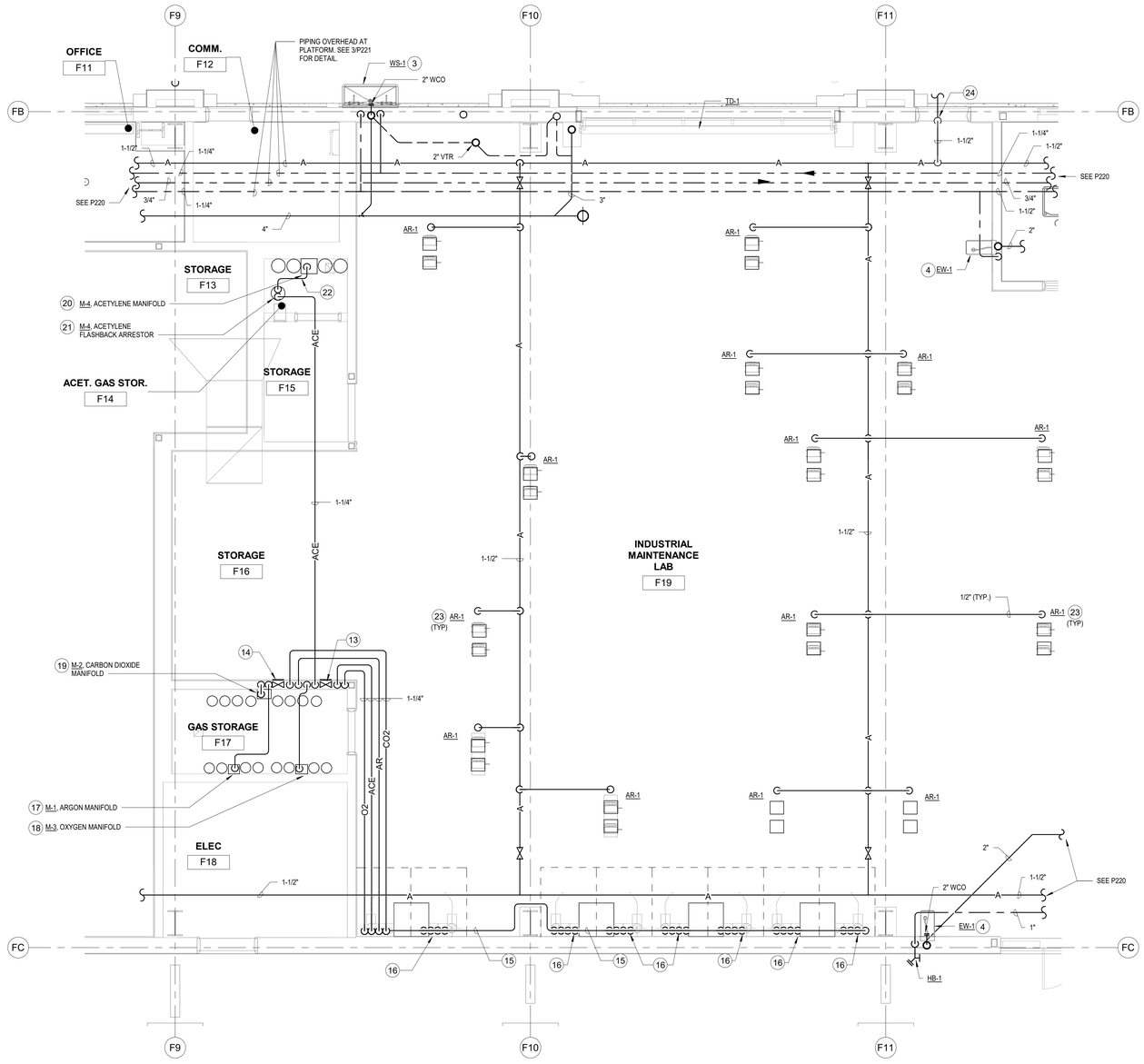

ENLARGED PLUMBING FLOOR PLAN - BUILDING F — 1/4" = 1'-0" | 1

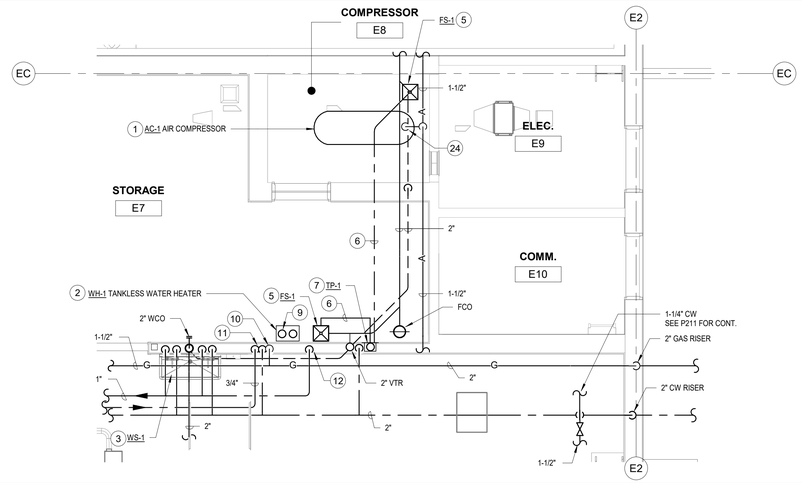

ENLARGED PLUMBING PLAN - BUILDING E — 1/4" = 1'-0" | 2

KEYNOTES

1 AIR COMPRESSOR ON HOUSEKEEPING PAD. SEE 14/P800 FOR DETAIL.
2 TANKLESS GAS WATER HEATER MOUNTED ON WALL. SEE 13/P800 FOR DETAIL.
3 3/4" CW & HW DN., 2" S. DN., AND 1-1/2" VR FOR 2-STATION WASH SINK.
4 3/4" CW DN., 2" S. DN, AND 1-1/2" VR FOR EYEWASH.
5 2" S W/ P-TRAP & 1-1/2" V OFFSET BEL. FLR. FOR FLOOR SINK. PROVIDE 1/2" CW TP CONNECTION.
6 1/2" CW BEL. FLR. FROM TRAP PRIMER TO DRAIN.
7 ELECTRONIC TRAP PRIMER IN WALL BOX @+12" AFF. ROUTE 1/2" CW W/ SOV TO INLET. ROUTE 1/2" CW BEL. FLR. TO FLOOR SINK.
8 NOT USED.
9 3" VENT & 3" AIR INTAKE UP FROM WATER HEATER TO CONCENTRIC VENT THRU ROOF. SEE 10/P800 FOR DETAIL.
10 1-1/4" GAS DN. TO WATER HEATER.
11 1" CW DN., & 3/4" HWR UP FROM WATER HEATER.
12 1" HW UP FROM WATER HEATER.
13 1-1/4" ACE & 1-1/4" O2 DN. IN WALL TO EMERGENCY SOV'S STACKED ONE ABOVE THE OTHER BEHIND EASY OPEN ACCESS DOOR @ +46" AFF. PROVIDE RED PLASTIC SIGN W/ WHITE LETTERS MOUNTED ON WALL ABOVE ACCESS DOOR. SIGN TO READ "EMERGENCY ACETYLENE AND OXYGEN SHUT-OFFS".
14 1-1/4" ACE & 1-1/4" CO2 DN. IN WALL TO EMERGENCY SOV'S STACKED ONE ABOVE THE OTHER BEHIND EASY OPEN ACCESS DOOR @ +46" AFF. PROVIDE RED PLASTIC SIGN W/ WHITE LETTERS MOUNTED ON WALL ABOVE ACCESS DOOR. SIGN TO READ "EMERGENCY ACETYLENE AND OXYGEN SHUT-OFFS".
15 RACK 1-1/4" ACE, O2, AR & CO2 PIPES ALONG WALL ABOVE WELDING BOOTHS. (ONLY FOR ONE PIPE SHOWN FOR CLARITY). SEE 11/P800 FOR PIPE SUPPORT DETAIL.
16 1/2" ACE, 1/2" O2, 1/2" AR & 1/2" CO2 DN. ALONG WALL TO WELDING BOOTH. PROVIDE SINGLE STATION DROP AND REGULATOR FLOW METER FOR EACH PIPE DROP. VERIFY EXACT LOCATIONS AND HEIGHTS OF PIPE STUBS WITH OWNER. PROVIDE NECESSARY PIPING OFFSETS AND PIPE SUPPORT FOR EACH DROP ON WALL. (TYPICAL OF 8 BOOTHS)
17 ARGON MANIFOLD W/ (4) CYLINDERS. SEE 17/P800 FOR SUPPORT DETAIL.
18 OXYGEN MANIFOLD W/ (4) CYLINDERS. SEE 17/P800 FOR SUPPORT DETAIL.
19 CARBON DIOXIDE MANIFOLD W/ (8) CYLINDERS. SEE 17/P800 FOR SUPPORT DETAIL.
20 ACETYLENE MANIFOLD W/ (4) CYLINDERS. SEE 17/P800 FOR SUPPORT DETAIL.
21 300 CFH HYDRAULIC FLASHBACK ARRESTOR ON FLOOR. SEE 17/P800 FOR SUPPORT DETAIL (SIMILAR).
22 1-1/4" ACE PIPED FROM MANIFOLD TO FLASHBACK ARRESTOR INLET.
23 1/2" AIR DN. AND CONNECT TO AIR HOSE REEL W/ SOV (TYP).
24 1-1/2" AIR DN. & OFFSET BELOW CANOPY ROOF. SEE P220 FOR CONT.

KEYPLAN

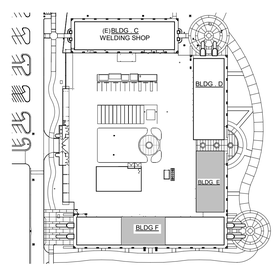

FOR BID ONLY

Teter, LLP expressly reserves its common law copyright and other property rights in these plans. This document, the ideas and designs incorporated herein, as an instrument of professional service, is not to be used in whole or in part, for any other project without prior written authorization.

MARK	DATE	DESCRIPTION
	11/1/2022	DSA BACKCHECK

TETER, LLP
FRESNO HEADQUARTERS
VISALIA | BAKERSFIELD | MODESTO | SAN LUIS OBISPO
ARCHITECTS ENGINEERS CONNECTED

TULARE CAMPUS CTE
COLLEGE OF THE SEQUOIAS
4999 E. BARDSLEY AVE.
TULARE, CA

DRAWING TITLE
ENLARGED PLUMBING FLOOR PLAN - BUILDING E & F

PROJECT NO.
21-12032

DRAWING
P321

PLOT DATE: 11/1/2022 2:54:39 PM

\\tetr-file1\Users\yasser.ahmad_TETR\Documents\12032-P-COS Tulare CTE_yasser.ahmadF7SSY.rvt

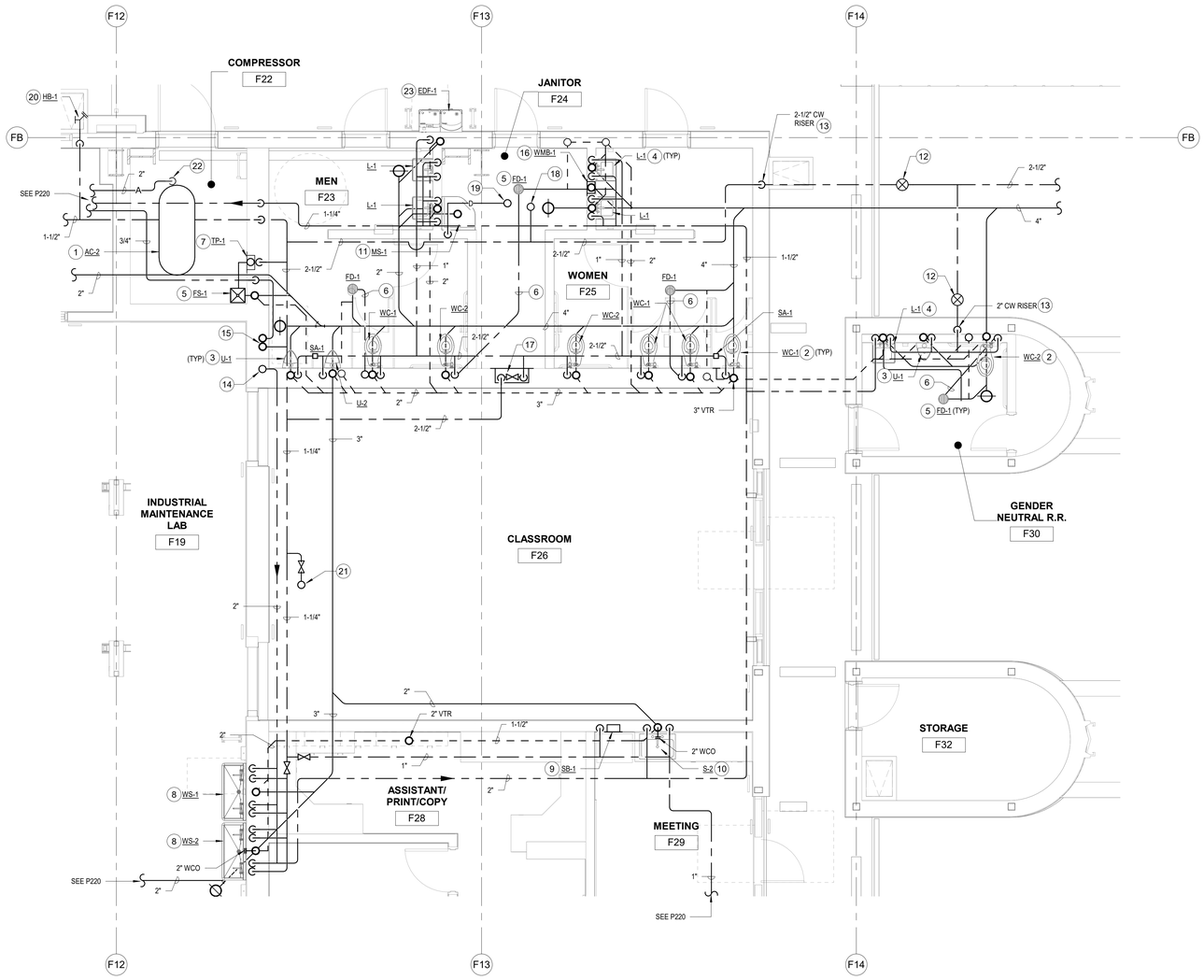

KEYNOTES

1 AIR COMPRESSOR ON HOUSEKEEPING PAD. SEE 14/P800 FOR DETAIL.
2 1-1/2" CW DN., 4" S DN. AND 2" VR FOR WATER CLOSET.
3 1" CW DN, 2" S DN & 2" VR W/ WCO ABOVE FOR URINAL.
4 1/2" CW & HW DN., 2" S DN & 1 1/2" VR FOR LAVATORY.
5 2" S W/ P-TRAP & 1-1/2" V OFFSET BEL. FLR. FOR FLOOR DRAIN (OR FLOOR SINK). PROVIDE 1/2" CW TP CONNECTION.
6 1/2" CW BEL. FLR. FROM FLUSH VALVE TO FLOOR DRAIN.
7 ELECTRONIC TRAP PRIMER IN WALL BOX @ +12" AFF. ROUTE 1/2" CW W/ SOV TO INLET. ROUTE 1/2" CW BEL. FLR. TO FLOOR SINK.
8 3/4" CW & HW DN., 2" S DN. AND 1-1/2" VR FOR 2-STATION WASH SINK.
9 1/2" CW DN TO WATER SUPPLY BOX MOUNTED @+12" AFF.
10 1/2" CW & HW DN., 2" S DN., 1-1/2" VR FOR SINK.
11 3/4" CW & HW DN., 3" S DN. & 2" VR FOR MOP SINK.
12 CW SOV IN BOX. SEE 1/P800 FOR DETAIL.
13 CW UP IN WALL TO ABV. CLG.
14 2" HW DN. FROM WATER HEATER ON PLATFORM ABOVE AND OFFSET ABOVE CEILING.
15 2" CW UP & 3/4" HWR UP TO WATER HEATER ON PLATFORM ABOVE. SEE 2/P221 FOR CONTINUATION.
16 ROUGH-IN 3/4" CW, 3/4" HW, 2" S DN. W/ STANDPIPE DRAIN, & 1-1/2"VR FOR RECESSED WASHING MACHINE BOX.
17 2-1/2" CW DN. TO SOV BEHIND WALL ACCESS DOOR @+5'-0" AFF. RISE W/ 2-1/2" CW TO ABV. CLG.
18 1" CW UP TO EVAP COOLER ON PLATFORM ABOVE. SEE 2/P221 FOR CONT.
19 1" DRAIN LINE FROM EVAP COOLER. OFFSET ABV. CLG. AND DROP DN. IN WALL TO DISCHARGE INTO MOP SINK W/ 90 ELB DN.
20 3/4" CW DN. TO HOSE BIBB @ +12"
21 3/4" CW UP THRU ROOF TO HOSE BIBB. SEE P520 FOR CONT.
22 2" AIR UP FROM AIR COMPRESSOR TO OVERHEAD.
23 3/4" CW DN., 2" S. DN. & 1-1/2" VR FOR DRINKING FOUNTAIN W/ BOTTLE FILLER.

NORTH

KEYPLAN

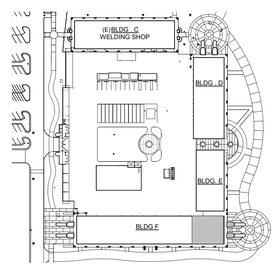

FOR BID ONLY

Teter, LLP expressly reserves its common law copyright and other property rights in these plans. This document, the ideas and designs incorporated herein, as an instrument of professional service, is not to be used in whole or in part, for any other project without prior written authorization.

MARK	DATE	DESCRIPTION
	11/1/2022	DSA BACKCHECK

TETER, LLP
FRESNO HEADQUARTERS
VISALIA | BAKERSFIELD | MODESTO | SAN LUIS OBISPO
ARCHITECTS ENGINEERS CONNECTED

TULARE CAMPUS CTE
COLLEGE OF THE SEQUOIAS
4999 E. BARDSLEY AVE.
TULARE, CA

DRAWING TITLE
ENLARGED PLUMBING FLOOR PLAN - BUILDING F

PROJECT NO.
21-12032

DRAWING
P322

\\tetr-file1\Users\yasser.ahmad_TETR\Documents\12032-P-COS Tulare CTE_yasser.ahmadF7SSY.rvt
PLOT DATE: 11/1/2022 2:54:48 PM

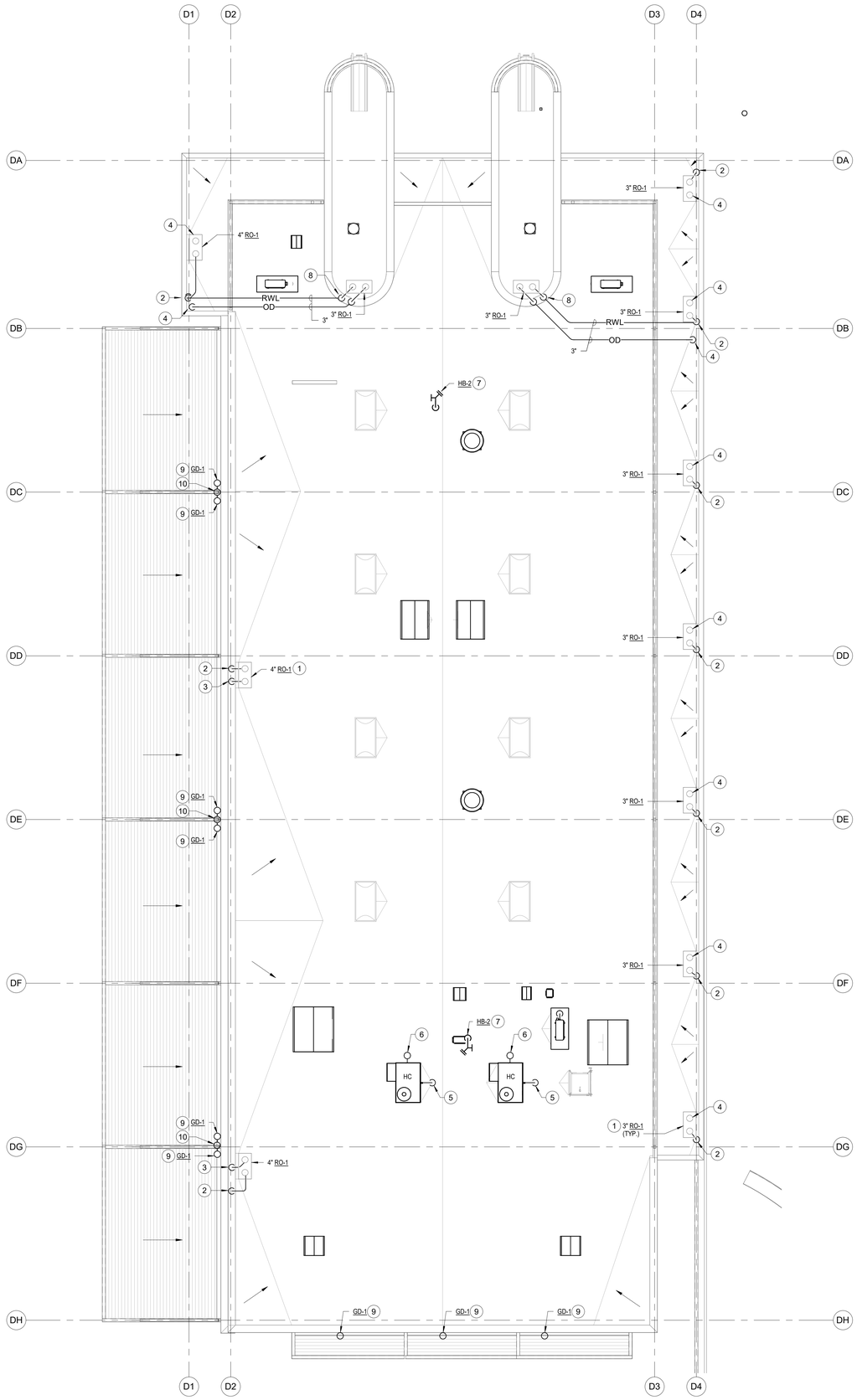

KEYNOTES

1 ROOF AND OVERFLOW DRAINS. SEE A802 FOR ARCHITECTURAL DETAILS (TYP.).
2 RWL DROP IN WALL OR COLUMN SPACE BEL. SEE P200 FOR CONT.
3 OVERFLOW DRAIN DROP IN WALL BEL. SEE P200 FOR CONT.
4 OVERFLOW DRAIN DAYLIGHT 1" PAST BOTTOM OF SOFFIT.
5 1" GAS UP THRU ROOF AND CONNECT TO HC UNIT W/ SOV AND DIRT LEG PER DETAIL 4/P800 (60 MBH).
6 CONNECT 3/4" CD TO HC UNIT W/ TRAP PER DETAIL 3/P800 AND DROP DN. THRU ROOF.
7 3/4" CW UP THRU ROOF TO STANDPIPE HOSE BIBB @+12".
8 RWL & OD DN. AND OFFSET OVERHEAD HIGH POSSIBLE BEL. LOW ROOF.
9 INSTALL GUTTER DRAIN IN BOTTOM OF ROOF GUTTER REFER 3/A821 FOR ARCH. DETAIL. PROVIDE 3" SCHEDULE 40 GALV. STEEL PIPE TO OUTLET AND PIPE OVER TO 3" DOWNSPOUT.
10 3" DOWNSPOUT ALONG WALL. SEE SHT. P200 FOR CONT.

NORTH

PLUMBING ROOF PLAN - BUILDING D

1/8" = 1'-0" | 1

KEYPLAN

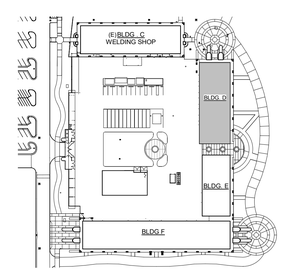

FOR BID ONLY

Teter, LLP expressly reserves its common law copyright and other property rights in these plans. This document, the ideas and designs incorporated herein, as an instrument of professional service, is not to be used in whole or part, for any other project without prior written authorization.

MARK	DATE	DESCRIPTION
	11/1/2022	DSA BACKCHECK

TETER, LLP
FRESNO HEADQUARTERS
VISALIA | BAKERSFIELD | MODESTO | SAN LUIS OBISPO
ARCHITECTS ENGINEERS CONNECTED

TULARE CAMPUS CTE
COLLEGE OF THE SEQUOIAS
4999 E. BARDSLEY AVE.
TULARE, CA

DRAWING TITLE
PLUMBING ROOF PLAN - BUILDING D

PROJECT NO.
21-12032

DRAWING
P500

\\teter-file1\Users\yasser.ahmad_TETER\Documents\12032-P-COS Tulare CTE_yasser.ahmadF7SSY.rvt

PLOT DATE: 11/1/2022 2:54:51 PM

\\tetr-file1\Users\yasser.ahmad_TETR\Documents\12032-P-COS Tulare CTE_yasser.ahmadF7SSY.rvt

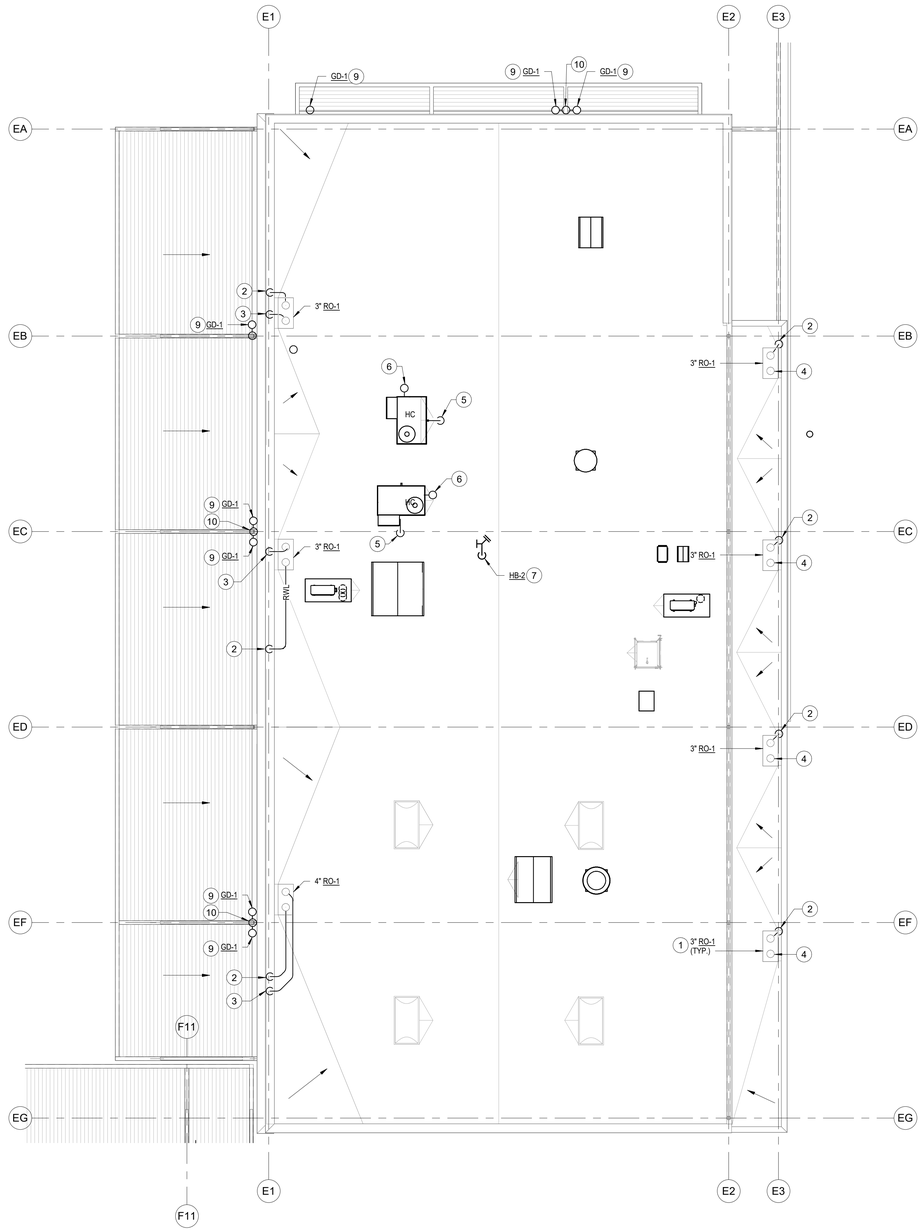

KEYNOTES

1 ROOF AND OVERFLOW DRAINS. SEE A802 FOR ARCHITECTURAL DETAILS (TYP.).
2 RWL DROP IN WALL OR COLUMN SPACE BEL. SEE P210 FOR CONT.
3 OVERFLOW DRAIN DROP IN WALL BEL. SEE P210 FOR CONT.
4 OVERFLOW DRAIN DAYLIGHT 1" PAST BOTTOM OF SOFFIT.
5 1" GAS UP THRU ROOF AND CONNECT TO HC UNIT W/ SOV AND DIRT LEG PER DETAIL 4/P800 (60 MBH).
6 CONNECT 3/4" CD TO HC UNIT W/ TRAP PER DETAIL 3/P800 AND DROP DN. THRU ROOF.
7 3/4" CW UP THRU ROOF TO STANDPIPE HOSE BIBB @+12".
8 NOT USED.
9 INSTALL GUTTER DRAIN IN BOTTOM OF ROOF GUTTER REFER 3/A821 FOR ARCH. DETAIL. PROVIDE 3" SCHEDULE 40 GALV. STEEL PIPE TO OUTLET AND PIPE OVER TO 3" DOWNSPOUT.
10 3" DOWNSPOUT ALONG WALL. SEE SHT. P200 FOR CONT.

NORTH

KEYPLAN

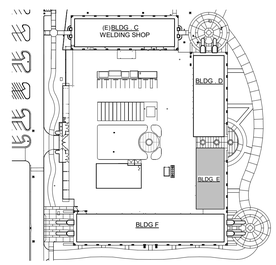

PLUMBING ROOF PLAN - BUILDING E | 1/8" = 1'-0" | 1

FOR BID ONLY

Teter, LLP expressly reserves its common law copyright and other property rights in these plans. This document, the ideas and designs incorporated herein, as an instrument of professional service, is not to be used in whole or part, for any other project without prior written authorization.

MARK	DATE	DESCRIPTION
	11/1/2022	DSA BACKCHECK

TETER, LLP
FRESNO HEADQUARTERS
VISALIA | BAKERSFIELD | MODESTO | SAN LUIS OBISPO
ARCHITECTS ENGINEERS CONNECTED

TULARE CAMPUS CTE
COLLEGE OF THE SEQUOIAS
4999 E. BARDSLEY AVE.
TULARE, CA

DRAWING TITLE
PLUMBING ROOF PLAN - BUILDING E

PROJECT NO.
21-12032

DRAWING
P510

PLOT DATE: 11/1/2022 2:54:53 PM

\\tetr-file1\Users\yasser.ahmad_TETR\Documents\12032-P-COS Tulare CTE_yasser.ahmadF7SSY.rvt

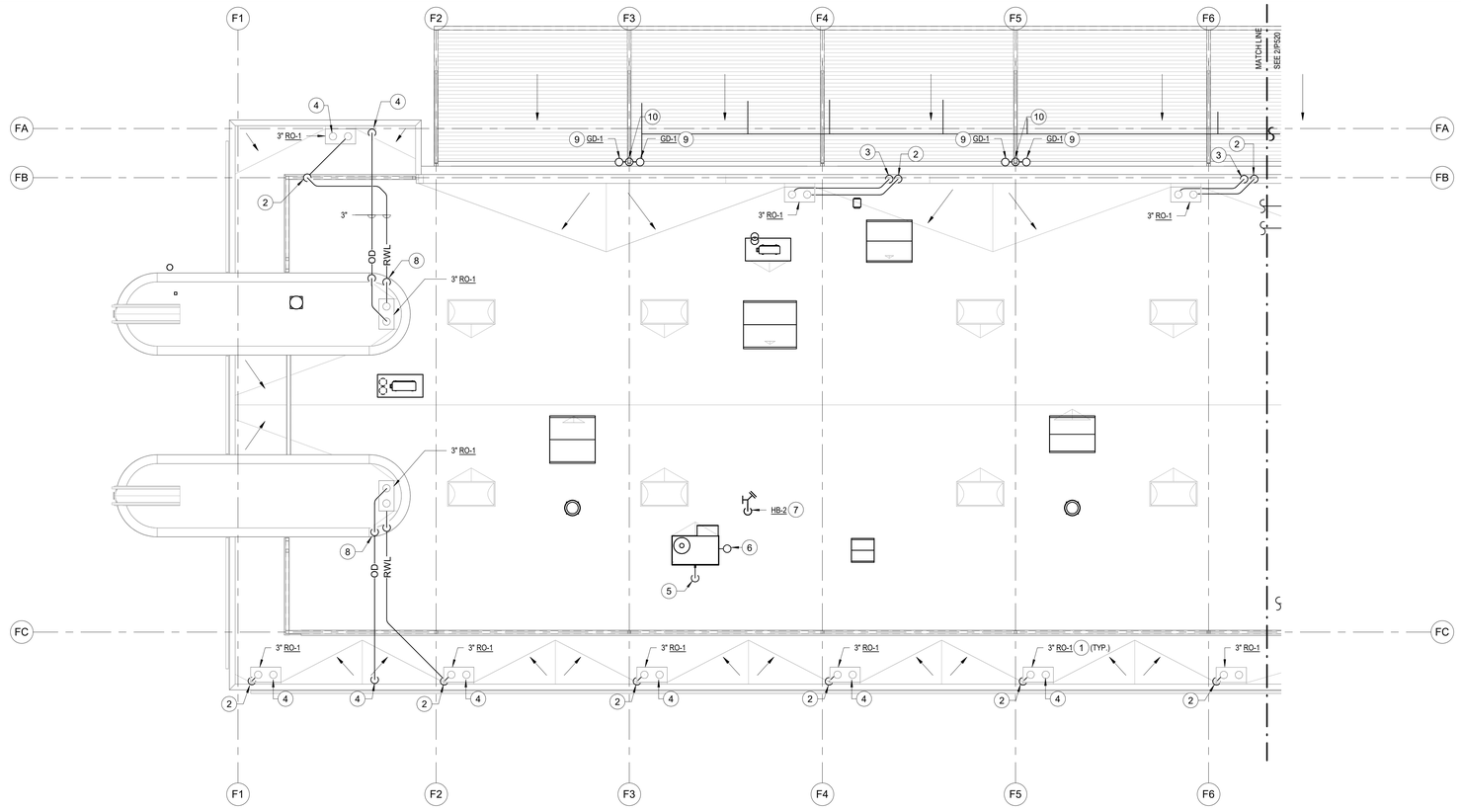

PLUMBING ROOF PLAN - BUILDING F — 1/8" = 1'-0" | 1

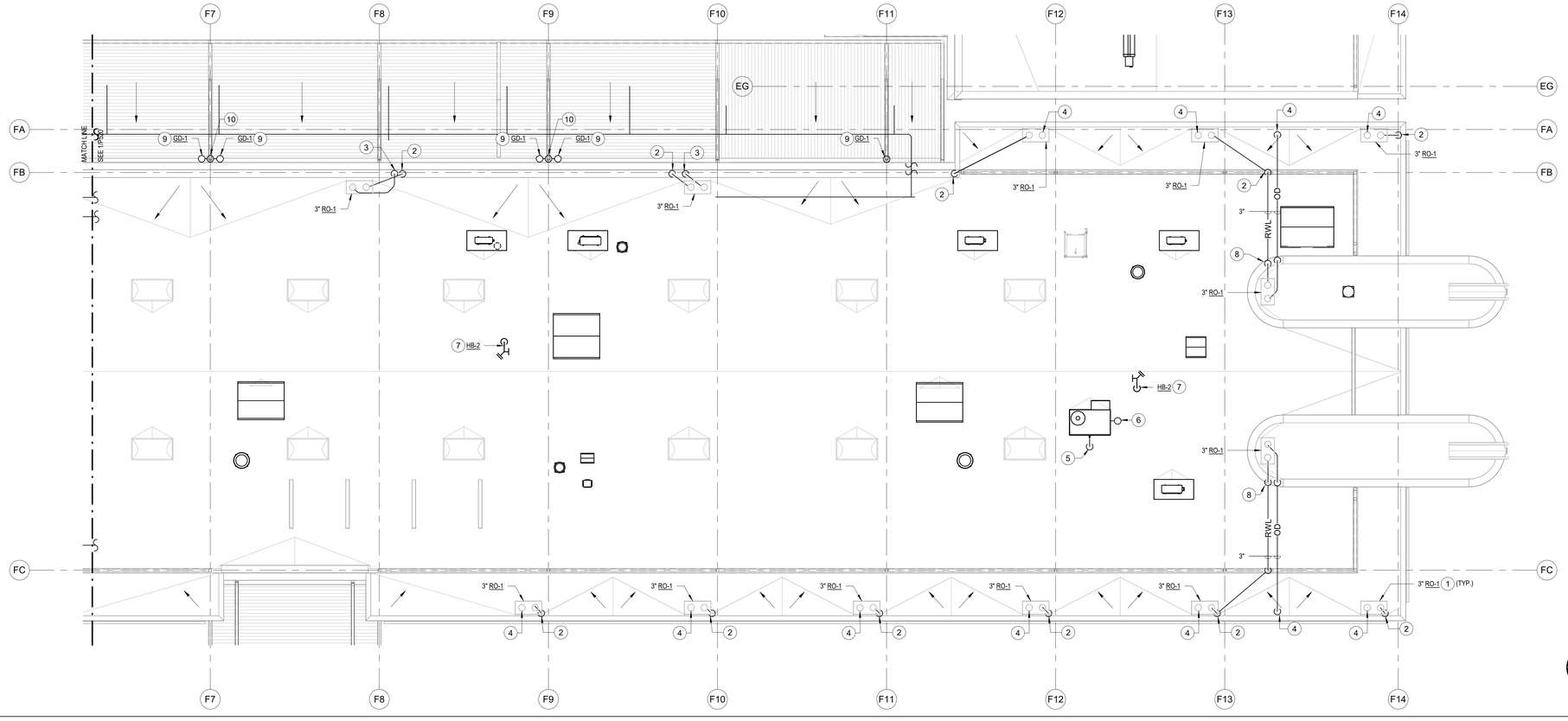

PLUMBING ROOF PLAN - BUILDING F — 1/8" = 1'-0" | 2

KEYNOTES

1. ROOF AND OVERFLOW DRAINS. SEE A802 FOR ARCHITECTURAL DETAILS (TYP.).
2. RWL DROP IN WALL OR COLUMN SPACE BEL. SEE P220 FOR CONT.
3. OVERFLOW DRAIN DROP IN WALL BEL. SEE P220 FOR CONT.
4. OVERFLOW DRAIN DAYLIGHT 1" PAST BOTTOM OF SOFFIT.
5. 1" GAS UP THRU ROOF AND CONNECT TO HC UNIT W/ SOV AND DIRT LEG PER DETAIL 4/P800 (60 MBH).
6. CONNECT 3/4" CD TO HC UNIT W/ TRAP PER DETAIL 3/P800 AND DROP DN. THRU ROOF.
7. 3/4" CW UP THRU ROOF TO STANDPIPE HOSE BIBB @+12".
8. RWL & OD DN. AND OFFSET OVERHEAD BEL. LOW ROOF.
9. INSTALL GUTTER DRAIN IN BOTTOM OF ROOF GUTTER REFER 3/A821 FOR ARCH. DETAIL. PROVIDE 3" SCHEDULE 40 GALV. STEEL PIPE TO OUTLET AND PIPE OVER TO 3" DOWNSPOUT.
10. 3" DOWNSPOUT ALONG WALL. SEE SHT. P200 FOR CONT.

KEYPLAN

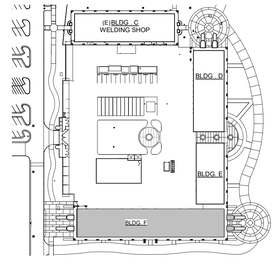

FOR BID ONLY

Teter, LLP expressly reserves its common law copyright and other property rights in these plans. This document, the ideas and designs incorporated herein, as an instrument of professional service, is not to be used in whole or in part, for any other project without prior written authorization.

MARK	DATE	DESCRIPTION
	11/1/2022	DSA BACKCHECK

TETER, LLP
ARCHITECTS ENGINEERS CONNECTED
FRESNO HEADQUARTERS
VISALIA | BAKERSFIELD | MODESTO | SAN LUIS OBISPO

TULARE CAMPUS CTE
COLLEGE OF THE SEQUOIAS
4999 E. BARDSLEY AVE.
TULARE, CA

DRAWING TITLE
PLUMBING ROOF PLAN - BUILDING F

PROJECT NO.
21-12032

DRAWING
P520

PLOT DATE: 11/1/2022 2:54:58 PM

\\tetr-file1\Users\yasser.ahmad_TETR\Documents\12032-P-COS Tulare CTE_yasser.ahmadF7SSY.rvt

NOTES

1. AREA MUST BE PREPARED AND CLEARED TO 2 FEET MINIMUM SURROUNDING ENTIRE TANK.
2. THE EXCAVATION'S SLOPE, BENCHING OR SHORING SHALL COMPLY WITH REQUIREMENTS OF OSHA 29 CRF 1926 SUBPART P. JENSEN PRECAST WILL NOT VIOLATE THIS OSHA STANDARD IN THE COURSE OF SETTING AND SEALING THE TANK.
3. BASE MUST BE LEVEL AND EVEN IN ALL DIRECTIONS.
4. THE EXCAVATION SHALL BE BEDDED WITH SUITABLE GRANULAR MATERIAL AND SHALL BE COMPACTED TO 90% OF ITS MAXIMUM DRY DENSITY OR TO THE REQUIREMENTS OF THE PROJECT GEOTECHNICAL ENGINEER.
5. DESIGN LOAD: H-20 TRAFFIC WITH DRY SOIL CONDITIONS (WATER LEVEL BELOW TANK) AND 1'-6" EARTH COVER.
6. FOR COMPLETE INSTALLATION DESIGN AND PRODUCT INFORMATION CONTACT JENSEN PRECAST.
7. DIMENSIONS SHOWN ARE FOR SOI-1. (SOI-2 SIMILAR.)

MINIMUM EXCAVATION
6'-10" x
11'-8"
x REQ'D DEPTH

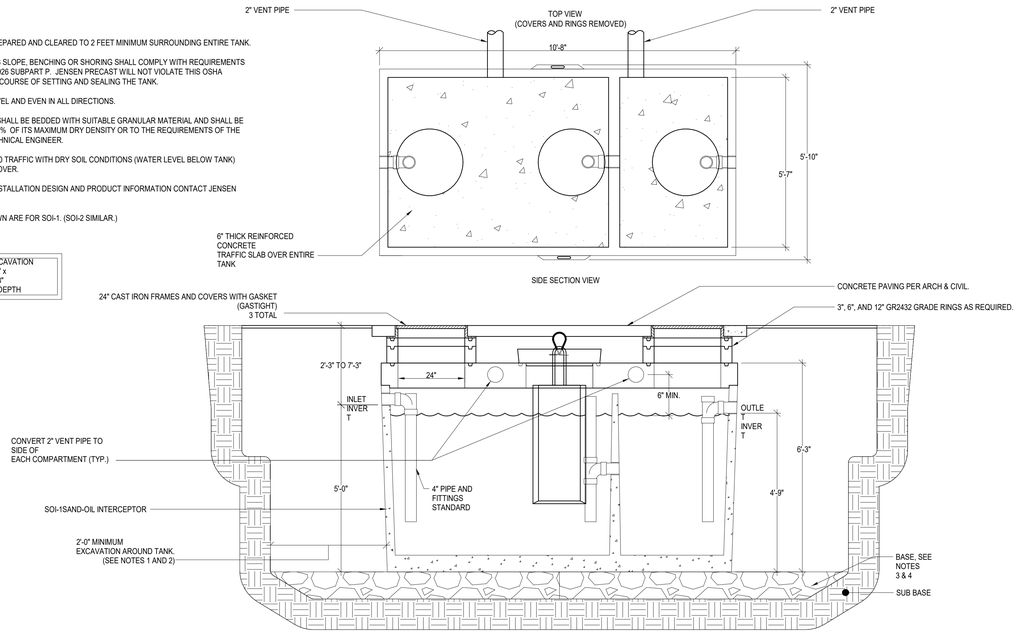

SAND - OIL INTERCEPTOR 15

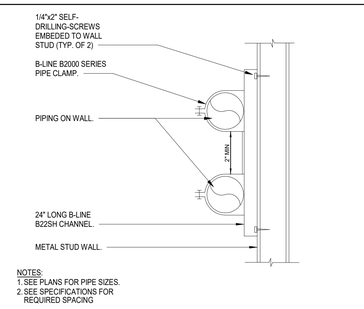

NOTES:
1. SEE PLANS FOR PIPE SIZES.
2. SEE SPECIFICATIONS FOR REQUIRED SPACING

PIPE SUPPORT ON WALL 11

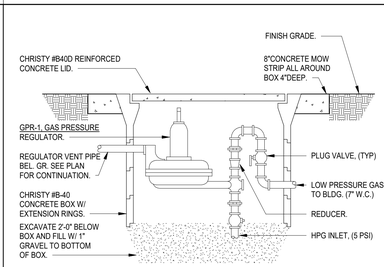

GAS PRESSURE REGULATOR IN VAULT 6

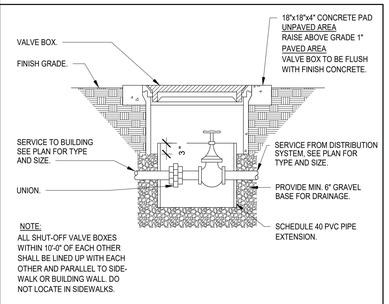

NOTE:
ALL SHUT-OFF VALVE BOXES WITHIN 10'-0" OF EACH OTHER SHALL BE LINED UP WITH EACH OTHER AND PARALLEL TO SIDE-WALK OR BUILDING WALL. DO NOT LOCATE IN SIDEWALKS.

SHUT-OFF VALVE IN BOX 1

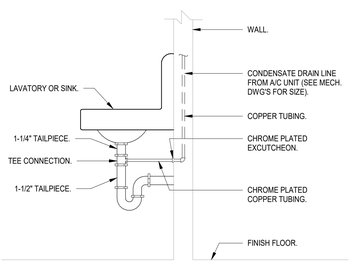

CONDENSATE TERMINATION TO LAVATORY TAILPIECE 12

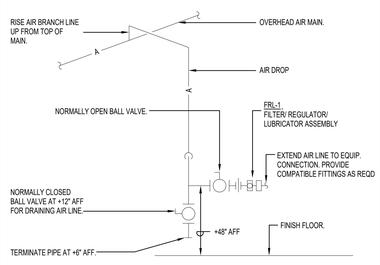

AIR DROP DETAIL 7

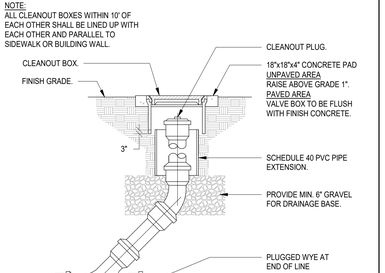

CLEANOUT TO GRADE 2

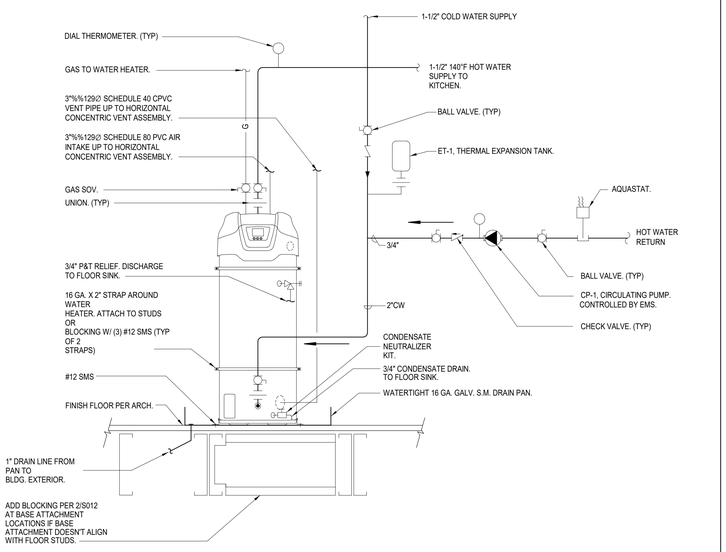

WATER HEATER DETAIL 16

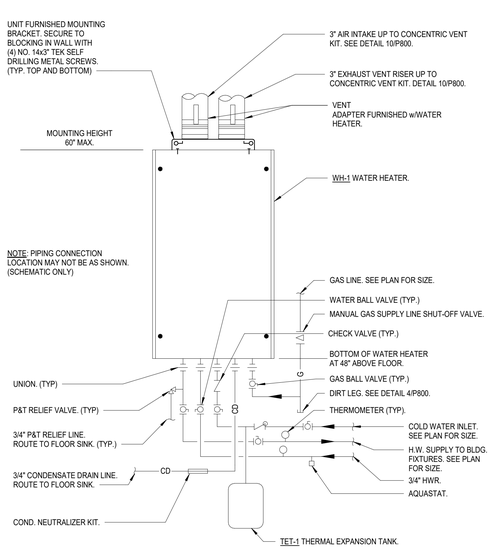

TANKLESS GAS WATER HEATER 13

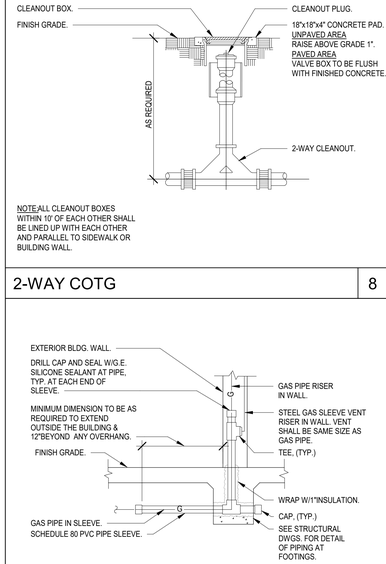

2-WAY COTG 8

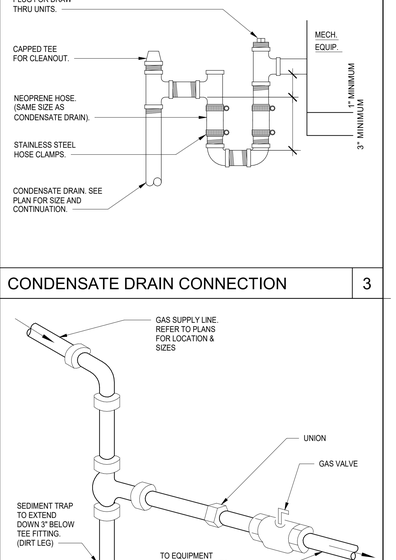

CONDENSATE DRAIN CONNECTION 3

GAS PIPE IN SLEEVE DETAIL 9

GAS DIRT LEG 4

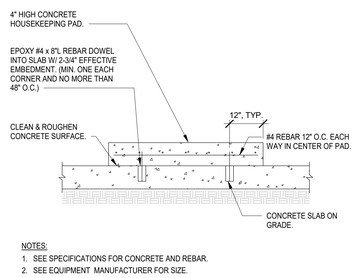

NOTES:
1. SEE SPECIFICATIONS FOR CONCRETE AND REBAR.
2. SEE EQUIPMENT MANUFACTURER FOR SIZE.

HOUSEKEEPING PAD N.T.S. 18

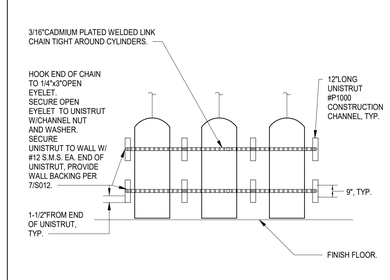

NOTE: TANK SUPPORTS ARE REQ'D FOR BOTH IN-USE CYLINDERS AND STORAGE CYLINDERS.

CYLINDER SUPPORT DETAIL 17

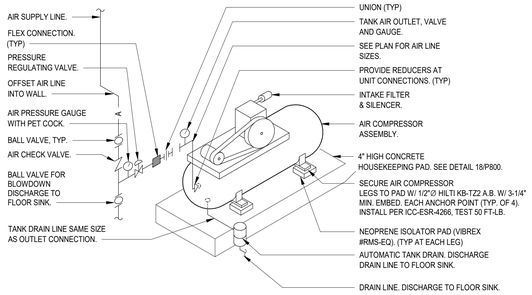

AIR COMPRESSOR DETAIL 14

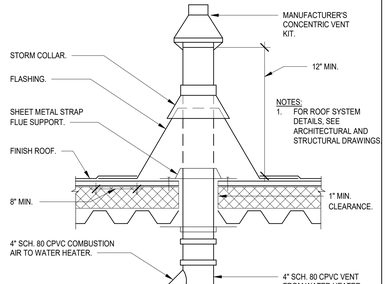

CONCENTRIC VENT THRU ROOF 10

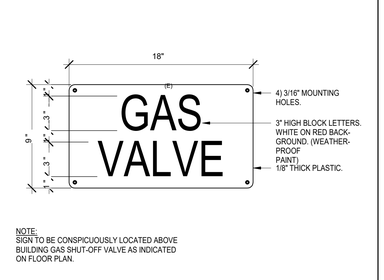

NOTE:
SIGN TO BE CONSPICUOUSLY LOCATED ABOVE BUILDING GAS SHUT-OFF VALVE AS INDICATED ON FLOOR PLAN.

GAS VALVE SIGN 5

PLOT DATE: 11/1/2022 2:55:01 PM

FOR BID ONLY

Teter, LLP expressly reserves its common law copyright and other property rights in these plans. This document, the ideas and designs incorporated herein, as an instrument of professional service, is not to be used in whole or in part, for any other project without prior written authorization.

MARK	DATE	DESCRIPTION
	11/1/2022	DSA BACKCHECK

TETER, LLP
FRESNO HEADQUARTERS
VISALIA | BAKERSFIELD | MODESTO | SAN LUIS OBISPO
ARCHITECTS ENGINEERS CONNECTED

TULARE CAMPUS CTE
COLLEGE OF THE SEQUOIAS
4999 E. BARDSLEY AVE.
TULARE, CA

DRAWING TITLE
PLUMBING DETAILS

PROJECT NO.
21-12032

DRAWING
P800

\\tetr-file1\Users\yasser.ahmad_TETR\Documents\12032-P-COS Tulare CTE_yasser.ahmadF7SSY.rvt

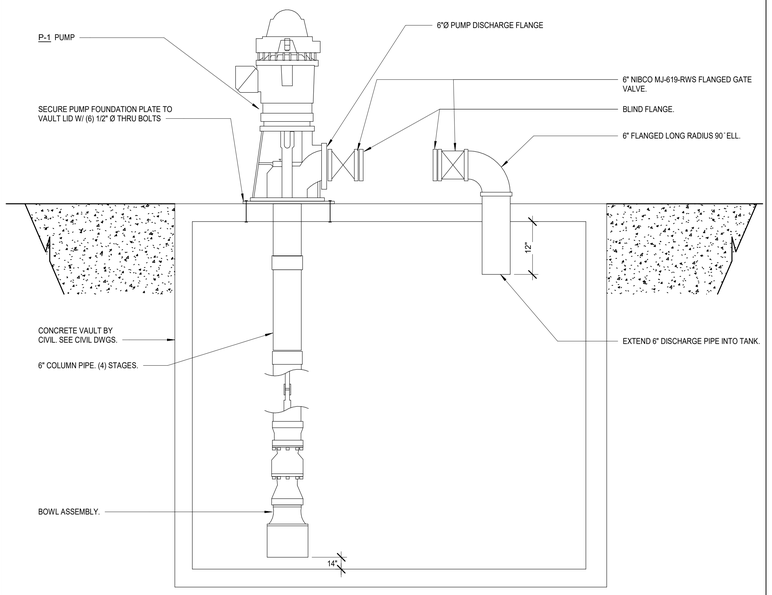

SECTION AT IRRIGATION TRAINING PUMP N.T.S. | 3

KEYNOTES

1 PRECAST CONCRETE VAULT. SEE CIVIL DRAWINGS.
2 INSTALL VERTICAL TURBINE PUMP (P-1) ON TOP OF VAULT LID OVER THE 10"Ø HOLE IN LID. SECURE PUMP FOUNDATION PLATE TO VAULT LID PER DETAIL 3/P801.
3 INSTALL 4" FLANGED GATE VALVE AND BLIND FLANGE TO PUMP OUTLET.
4 EXTEND 6"Ø GALV. SCHED. 40 STEEL PIPE DN. INTO TANK.
5 INSTALL 6" FLANGED GATE VALVE AND BLIND FLANGE.

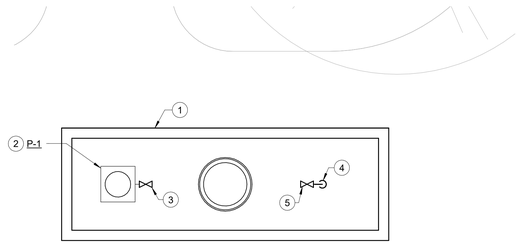

NORTH

ENLARGED SITE PLUMBING PLAN AT IRRIGATION TRAINING PUMP 1/4" = 1'-0" | 1

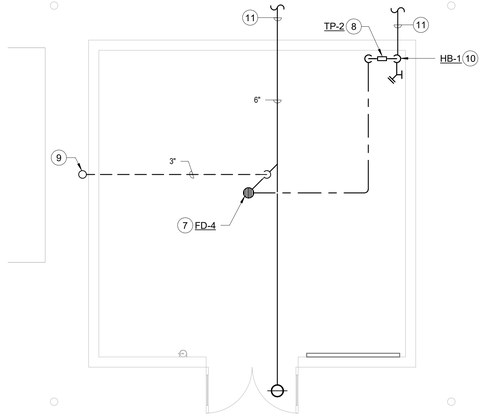

FIRE PUMP HOUSE 1/4" = 1'-0" | 4

KEYNOTES

1 1500 GALLON SAND-OIL INTERCEPTOR BELOW GRADE. SEE 15/P800 FOR DETAIL.
2 (2) 2" VENT LINES BEL. GR. FROM INTERCEPTOR.
3 (4) 2" VR'S FROM BEL. GR. IN CORNER OF ENCLOSURE, CONNECT TOGETHER @+12" ABV. GR. AND RISE W/ (1) 2" VR IN CORNER. TERMINATE VENT PIPE FLUSH WITH TOP OF CMU WALL.
4 4" S. BEL. GR. SEE CIVIL DWGS. FOR SITE CONTINUATION.
5 4" S. W/ P-TRAP AND 2" V. OFFSET BEL. GR. FOR AREA DRAIN.
6 4" COTG. SEE 2/P800 FOR DETAIL.
7 6" S. W/ P-TRAP AND 3" V. OFFSET BEL GR. FOR FLOOR DRAIN.
8 3/4" CW WITH SOV TO ELECTRONIC TRAP PRIMER ON WALL. ROUTE 1/2" CW BELOW SLAB TO FLOOR DRAIN.
9 3" VR TO 10' ABV. GR.
10 3/4" CW TO HOSE BIBB AT +18 AFF.
11 6" S. BEL. GR. AND 3/4" CW BEL. GR. SEE CIVIL DWGS FOR SITE CONTINUATION.

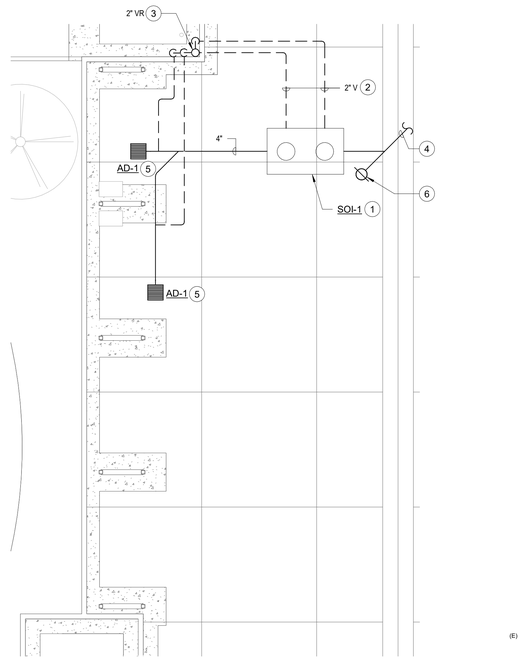

NORTH

ENLARGED SITE PLUMBING PLAN 1/8" = 1'-0" | 2

FOR BID ONLY

Teter, LLP expressly reserves its common law copyright and other property rights in these plans. This document, the ideas and designs incorporated herein, as an instrument of professional service, is not to be used in whole or in part, for any other project without prior written authorization.

MARK	DATE	DESCRIPTION
	11/1/2022	DSA BACKCHECK

TETER, LLP
ARCHITECTS ENGINEERS CONNECTED
FRESNO HEADQUARTERS
VISALIA | BAKERSFIELD | MODESTO | SAN LUIS OBISPO

TULARE CAMPUS CTE
COLLEGE OF THE SEQUOIAS
4999 E. BARDSLEY AVE.
TULARE, CA

DRAWING TITLE
ENLARGED PLUMBING SITE PLAN AND DETAILS

PROJECT NO.
21-12032

DRAWING
P801

PLOT DATE: 11/1/2022 2:55:01 PM

MECHANICAL SCHEDULES

GRILLE SCHEDULE

MARK	DUTY	DESCRIPTION
A	DUCT MOUNTED SUPPLY	TITUS MODEL US-DL SPIRAL DUCT DRUM LOUVER, 10" HEIGHT, WITH ASD, STANDARD FINISH - #34 CLEAR ANODIZE.
B	DUCT MOUNTED SUPPLY	TITUS TMR ROUND LOUVERED SUPPLY GRILLE WITH 3 CONCENTRIC CONES, STANDARD FINISH - #26 WHITE.
C	LAY-IN SUPPLY	TITUS MODEL TMS (TYPE 3) SQUARE LOUVERED SUPPLY GRILLE, 24"x24" MODULE, STANDARD FINISH - #26 WHITE.
D	LAY-IN RETURN / EXHAUST	TITUS MODEL PAR (TYPE 3) PERFORATED FACE DIFFUSER, 24" x 24" MODULE, STANDARD FINISH - #26 WHITE.
E	SIDEWALL RETURN	TITUS MODEL 33RL, STEEL HEAVY DUTY FIXED LOUVER GRILLE, 1/2" BLADE SPACING, 38 DEFLECTION, STANDARD FINISH - #26 WHITE.
F	SURFACE MOUNT SUPPLY	TITUS MODEL TDC (TYPE 1), STEEL LOUVER DIFFUSER, CONCEALED FASTENERS, SQUARE OR RECTANGULAR NECK, STANDARD FINISH - #26 WHITE.
G	SURFACE MOUNT EXHAUST	TITUS MODEL 25RL (TYPE 1), STEEL FIXED LOUVER GRILLE, 1/2" BLADE SPACING, FIXED 30° DEFLECTION, STANDARD FINISH - #26 WHITE.
H	SIDEWALL SUPPLY	TITUS MODEL 271RL (TYPE 1) STEEL SINGLE DEFLECTION SUPPLY GRILLE, STANDARD FINISH - #26 WHITE.
J	LAY-IN SUPPLY	TITUS MODEL PMC (TYPE 3) PERFORATED FACE DIFFUSER, FIELD POSITIONABLE DIRECTIONAL LOUVER CORE MOUNTED AT NECK, SQUARE NECK, 24"x24" MODULE, STANDARD FINISH - #26 WHITE.
K	DUCT MOUNTED SUPPLY	TITUS MODEL S300FL DUCT MOUNTED DOUBLE DEFLECTION GRILLE W/ ASD AIR SCOOP, STANDARD FINISH - #26 WHITE.
L	LAY-IN SUPPLY	TITUS MODEL MB-30 RECTANGULAR SLOT DIFFUSER, 2 SLOTS, HORIZONTAL DISCHARGE, STANDARD FINISH - #26 WHITE.

MECHANICAL SHEET INDEX

M001 MECHANICAL SCHEDULES, LEGENDS, AND NOTES
M002 MECHANICAL SCHEDULES
M003 MECHANICAL SCHEDULES
M004 MECHANICAL SCHEDULES
M100 MECHANICAL SITE PLAN
M200 MECHANICAL FLOOR PLAN - BUILDING D
M201 MECHANICAL PLATFORM PLAN - BUILDING D
M210 MECHANICAL FLOOR PLAN - BUILDING E
M211 MECHANICAL PLATFORM PLAN – BULDING E
M220 MECHANICAL FLOOR PLAN - BUILDING F
M221 MECHANICAL PLATFORM PLANS – BULDING F
M500 MECHANICAL ROOF PLAN - BUILDING D
M510 MECHANICAL ROOF PLAN - BUILDING E
M520 MECHANICAL ROOF PLAN - BUILDING F
M700 EMS SEQUENCE OF OPERATIONS
M800 MECHANICAL DETAILS
M801 MECHANICAL DETAILS
M900 TITLE 24 DOCUMENTATION
M901 TITLE 24 DOCUMENTATION
M902 TITLE 24 DOCUMENTATION
M903 TITLE 24 DOCUMENTATION

GENERAL NOTES

1. COORDINATION OF WORK: LAYOUT OF MATERIALS, EQUIPMENT AND SYSTEMS IS GENERALLY DIAGRAMMATIC UNLESS SPECIFICALLY DIMENSIONED. SOME WORK MAY BE SHOWN OFFSET FOR CLARITY.
2. THE ACTUAL LOCATION OF ALL MATERIALS, PIPING, DUCTWORK, FIXTURES, EQUIPMENT, SUPPORTS, ETC. SHALL BE CAREFULLY PLANNED, PRIOR TO INSTALLATION OF ANY WORK TO AVOID ALL INTERFERENCES WITH EACH OTHER, OR WITH STRUCTURAL, ELECTRICAL, ARCHITECTURAL OR OTHER ELEMENTS.
3. VERIFY THE PROPER VOLTAGE AND PHASE OF ALL EQUIPMENT WITH THE ELECTRICAL PLANS. ALL CONFLICTS SHALL BE CALLED TO THE ATTENTION OF THE ARCHITECT AND THE ENGINEER PRIOR TO THE INSTALLATION OF ANY WORK OR THE ORDERING OF ANY EQUIPMENT.
4. PROVIDE ALL DUCT TRANSITION PIECES AND FITTINGS REQUIRED TO ACCOMMODATE MECHANICAL EQUIPMENT CONNECTIONS, STRUCTURE, ARCHITECTURAL ELEMENTS, AND CHANGES IN DUCT SIZES.
5. ALL DUCTWORK SHALL BE CONSTRUCTED, ERECTED AND TESTED IN ACCORDANCE WITH THE STANDARDS ADOPTED BY SMACNA AND CHAPTER 6 OF THE 2019 CMC.
6. ALL DUCTWORK AND PIPING SHALL BE INSULATED CONSISTENT WITH THE REQUIREMENTS OF 2019 CMC. INSULATION MATERIALS SHALL MEET THE CALIFORNIA QUALITY STANDARD PER SECTION 110.8, 120.3, AND 120.4 OF THE 2019 CALIFORNIA ENERGY CODE.
7. ALL DUCT SIZES SHOWN ARE NET INSIDE DIMENSIONS.
8. DUCTWORK SHALL BE SHEET METAL CONSTRUCTED IN COMPLETE CONFORMANCE WITH CMC LATEST EDITION, CHAPTER 6 AND THE LATEST SMACNA HVAC DUCT CONSTRUCTION STANDARDS.
9. ALL DRAWINGS AND SPECIFICATIONS ARE TO BE CONSIDERED PART OF THE CONTRACT DOCUMENTS. THE CONTRACTOR SHALL BE RESPONSIBLE FOR THE REVIEW AND COORDINATION OF ALL DRAWINGS PRIOR TO ANY CONSTRUCTION, INCLUDING ARCHITECTURAL, STRUCTURAL, MECHANICAL, PLUMBING, AND ELECTRICAL. ANY WORK PERFORMED IN CONFLICT WITH THE CONTRACT DOCUMENTS OR ANY CODE REQUIREMENT SHALL BE CORRECTED BY THE CONTRACTOR AT HIS OWN EXPENSE AND AT NO EXPENSE TO THE OWNER OR THE OWNER REPRESENTATIVE.
10. PROVIDE VOLUME DAMPERS IN ALL BRANCH DUCTS (SUPPLY, RETURN, OSA AND EXHAUST) FOR SYSTEM BALANCING.
11. HANDLE, STORE AND INSTALL ALL EQUIPMENT PER MANUFACTURER'S INSTRUCTIONS AND AS DIRECTED IN THE PROJECT MANUAL.
12. ALL AIR SYSTEMS SHALL BE TESTED, ADJUSTED AND BALANCED TO MEET THE REQUIRED FLOW. TAB METHODOLOGY SHALL BE SUBMITTED TO OWNER REPRESENTATIVE PRIOR TO IMPLEMENTATION AND IN ACCORDANCE WITH PROJECT SEQUENCING.
13. THE CALIFORNIA ENERGY CODE REQUIRES ACCEPTANCE TESTING ON ALL NEWLY INSTALLED LIGHTING CONTROLS, MECHANICAL SYSTEMS, ENVELOPES, AND PROCESS EQUIPMENT AFTER INSTALLATION AND BEFORE PROJECT COMPLETION. AN ACCEPTANCE TEST IS A FUNCTIONAL PERFORMANCE TEST TO HELP ENSURE THAT NEWLY INSTALLED EQUIPMENT IS OPERATING AND IN COMPLIANCE WITH THE ENERGY CODE. LIGHTING CONTROLS ACCEPTANCE TEST MUST BE PERFORMED BY A CERTIFIED MECHANICAL ATT FOR PROJECTS SUBMITTED ON OR AFTER OCTOBER 1, 2021. A LISTING OF CERTIFIED ATT'S CAN BE FOUND AT https://www.energy.ca.gov/programs-and-topics/programs/acceptace-test-technician-certification-provider-program/acceptance. THE ACCEPTANCE TESTING PROCEDURES MUST BE REPEATED, AND DEFICIENCIES MUST BE CORRECTED BY THE BUILDER OR INSTALLING CONTRACTOR UNTIL THE CONSTRUCTION/INSTALLATION OF THE SPECIFIED SYSTEMS CONFORM AND PASS THE REQUIRED ACCEPTANCE CRITERIA. PROJECT INSPECTORS WILL BE COLLECTING THE FORMS TO CONFIRM THAT THE REQUIRED ACCEPTANCE TESTS HAVE BEEN COMPLETED.

ANCHORAGE & BRACING NOTES

MEP COMPONENT ANCHORAGE NOTE

ALL MECHANICAL, PLUMBING AND ELECTRICAL COMPONENTS SHALL BE ANCHORED AND INSTALLED PER THE DETAILS ON THE DSA APPROVED CONSTRUCTION DOCUMENTS. THE FOLLOWING COMPONENTS SHALL BE ANCHORED OR BRACED TO MEET THE FORCE AND DISPLACEMENT REQUIREMENTS PRESCRIBED IN THE 2019 CBC, SECTIONS 1617A.1.18 THROUGH 1617A.1.26 AND ASCE 7-16 CHAPTERS 13, 26, AND 30:

1. ALL PERMANENT EQUIPMENT AND COMPONENTS.
2. TEMPORARY, MOVABLE OR MOBILE EQUIPMENT THAT IS PERMANENTLY ATTACHED (E.G. HARD WIRED) TO THE BUILDING UTILITY SERVICES SUCH AS ELECTRICITY, GAS OR WATER. "PERMANENTLY ATTACHED" SHALL INCLUDE ALL ELECTRICAL CONNECTIONS EXCEPT FOR 110/220 VOLT RECEPTACLES HAVING A FLEXIBLE CABLE.
3. TEMPORARY, MOVABLE OR MOBILE EQUIPMENT WHICH IS HEAVIER THAN 400 POUNDS OR HAS A CENTER OF MASS LOCATED 4 FEET OR MORE ABOVE THE ADJACENT FLOOR OR ROOF LEVEL THAT DIRECTLY SUPPORT THE COMPONENT IS REQUIRED TO BE RESTRAINED IN A MANNER APPROVED BY DSA.

THE FOLLOWING MECHANICAL AND ELECTRICAL COMPONENTS SHALL BE POSITIVELY ATTACHED TO THE STRUCTURE, BUT NEED NOT DEMONSTRATE DESIGN COMPLIANCE WITH THE REFERENCES NOTED ABOVE. THESE COMPONENTS SHALL HAVE FLEXIBLE CONNECTIONS PROVIDED BETWEEN THE COMPONENT AND ASSOCIATED DUCTWORK, PIPING, AND CONDUIT. FLEXIBLE CONNECTIONS MUST ALLOW MOVEMENT IN BOTH TRANSVERSE AND LONGITUDINAL DIRECTIONS:

A. COMPONENTS WEIGHING LESS THAN 400 POUNDS AND HAVE A CENTER OF MASS LOCATED 4 FEET OR LESS ABOVE THE ADJACENT FLOOR OR ROOF LEVEL THAT DIRECTLY SUPPORT THE COMPONENT.
B. COMPONENTS WEIGHING LESS THAN 20 POUNDS, OR IN THE CASE OF DISTRIBUTED SYSTEMS, LESS THAN 5 POUNDS PER FOOT, WHICH ARE SUSPENDED FROM A ROOF OR FLOOR OR HUNG FROM A WALL.

THE ANCHORAGE OF ALL MECHANICAL, ELECTRICAL AND PLUMBING COMPONENTS SHALL BE SUBJECT TO THE APPROVAL OF THE DESIGN PROFESSIONAL IN GENERAL RESPONSIBLE CHARGE OR STRUCTURAL ENGINEER DELEGATED RESPONSIBILITY AND ACCEPTANCE BY DSA. THE PROJECT INSPECTOR WILL VERIFY THAT ALL COMPONENTS AND EQUIPMENT HAVE BEEN ANCHORED IN ACCORDANCE WITH ABOVE REQUIREMENTS.

PIPING, DUCTWORK, AND ELECTRICAL DISTRIBUTION SYSTEM BRACING NOTE

PIPING, DUCTWORK, AND ELECTRICAL DISTRIBUTION SYSTEMS SHALL BE BRACED TO COMPLY WITH THE FORCES AND DISPLACEMENTS PRESCRIBED IN ASCE 7-16 SECTION 13.3 AS DEFINED IN ASCE 7-16 SECTIONS 13.6.5, 13.6.6, 13.6.7, 13.6.8; AND 2019 CBC, SECTIONS 1617A.1.24, 1617A.1.25 AND 1617A.1.26.

THE METHOD OF SHOWING BRACING AND ATTACHMENTS TO THE STRUCTURE FOR THE IDENTIFIED DISTRIBUTION SYSTEM ARE AS NOTED BELOW. WHEN BRACING AND ATTACHMENTS ARE BASED ON A PRE-APPROVED INSTALLATION GUIDE (E.G., OSHPD OPM FOR 2013 CBC OR LATER), COPIES OF THE BRACING SYSTEM INSTALLATION GUIDE OR MANUAL SHALL BE AVAILABLE ON THE JOBSITE PRIOR TO THE START OF AND DURING THE HANGING AND BRACING OF THE DISTRIBUTION SYSTEMS. THE STRUCTURAL ENGINEER OF RECORD SHALL VERIFY THE ADEQUACY OF THE STRUCTURE TO SUPPORT THE HANGER AND BRACE LOADS.

MECHANICAL PIPING (MP), MECHANICAL DUCTS (MD), PLUMBING PIPING (PP), ELECTRICAL DISTRIBUTION SYSTEMS (E):

MP ☐ MD ☐ PP ☐ E ☐ - OPTION 1: DETAILED ON THE APPROVED DRAWINGS WITH PROJECT SPECIFIC NOTES AND DETAILS.

MP ☒ MD ☒ PP ☐ E ☐ - OPTION 2: SHALL COMPLY WITH THE APPLICABLE OSHPD PRE-APPROVAL (OPM #) #0043-13.

LEGEND

SYMBOL	ITEM	ABBR.
	ABOVE	ABV
	ABOVE CEILING	ABV CLG
	ABOVE FINISHED FLOOR	AFF
	ALTERNATE	ALT
	AIR CONDITIONING	AC
	AIR FLOW STATION	AFS
	AIR HANDLER UNIT	AHU
	ANALOG INPUT	AI
	ANALOG OUTPUT	AO
&	AND	
	ARCHITECT / ARCHITECTURAL	ARCH
@	AT	
	BACKDRAFT DAMPER	BDD
	BELOW FINISH CEILING	BFC
	BELOW FLOOR	BEL FLR
	BELOW GRADE	BEL GR
	BLIND FLANGE	BLF
	BRITISH THERMAL UNIT	BTU
	BRITISH THERMAL UNIT PER HOUR	BTUH
	CALIFORNIA MECHANICAL CODE	CMC
	CALIFORNIA PLUMBING CODE	CPC
	CEILING	CLG
℄	CENTER LINE	
	CONTINUATION	CONT
	CUBIC FEET OF AIR PER MINUTE	CFM
	CURRENT SENSOR	CS
Φ	DIAMETER	DIA
	DIFFERENTIAL PRESSURE SWITCH	DPS
	DIGITAL INPUT	DI
	DIGITAL OUTPUT	DO
	DOWN	DN
	DRAWING	DWG
	ELECTRICAL	ELEC
	ELBOW	ELL
	EXHAUST	EXH
	EXHAUST AIR	EA
	EXHAUST FAN	EF
	EXISTING	(E)
	FEET	FT
	FLOOR	FLR
	FLOW LINE	FL
	FLOW SWITCH	FS
	GAUGE	GA
	GALLON	GAL
	GALLONS PER HOUR	GPH
	GALLONS PER MINUTE	GPM
	INSIDE DIAMETER	ID
	MAKE-UP AIR UNIT	MAU
	MAXIMUM	MAX
	MINIMUM	MIN
	NEW	(N)
	NOT IN CONTRACT	NIC
	NOT TO SCALE	NTS
#	NUMBER	NO.
	OUTSIDE AIR	OSA
	OUTSIDE DIAMETER	OD
	POUNDS	LBS
	POUNDS PER SQUARE INCH	PSI
	POUNDS PER SQUARE INCH ABSOLUTE	PSIA
	POUNDS PER SQUARE INCH GAUGE	PSIG
	POLYVINYL CHLORIDE	PVC
	PRESSURE STATION	PS
	RETURN AIR	RA
	ROOM	RM
	SUPPLY AIR	SA
	SPECIFICATION	SPEC
	SQUARE FEET	SQ FT
	STAINLESS STEEL	SS
	TEMPERATURE	TEMP
	TEMPERATURE SENSOR	TS
	THROUGH	THRU
	TYPICAL	(TYP)
	UNDER GROUND	U/G
	VARIABLE AIR VOLUME UNIT	VAV
	WITH	W/
	WITHOUT	W/O
BD	BOILER BLOWDOWN	
BF	BOILER FEED	
CF	CHEMICAL FEED	
A	COMPRESSED AIR	A
CHWS	CHILLED WATER SUPPLY	CHWS
CHWR	CHILLED WATER RETURN	CHWR
CWS	CONDENSER WATER SUPPLY	CWS
CWR	CONDENSER WATER RETURN	CWR
CW	DOMESTIC COLD WATER	
HWS	HEATING HOT WATER SUPPLY	HWS
HWR	HEATING HOT WATER RETURN	HWR
RD	REFRIGERANT DISCHARGE	RD
RL	REFRIGERANT LIQUID	RL
RS	REFRIGERANT SUCTION	RS
SCW	SOFT COLD WATER	
S	STEAM SUPPLY	S

SYMBOL	ITEM	ABBR.
CR	STEAM CONDENSATE RETURN	CR
SBD	SURFACE BLOWDOWN	
D	DRAIN	D
	PIPING CAP	
	EXISTING (DESIGNATED)	(E)
	REMOVE / DEMO EXISTING (DESIGNATED)	
	DIRECTION OF FLOW	
	SUPPLY AIR	SA
	RETURN AIR	RA
	EXHAUST AIR	EA
	PIPE/DUCT TURN DOWN	
	PIPE/DUCT TURN UP	
	ROUND DUCT (SMALLER THAN 10Ø)	
	ROUND FLEXIBLE DUCT	
	RECTANGULAR OR ROUND DUCT (10Ø AND LARGER)	
	EXISTING DUCT (DESIGNATED)	
	REMOVE/ DEMO EXISTING DUCT (DESIGNATED)	
	DUCT WITH ACOUSTIC LINING	
	SUPPLY AIR DUCT DROP	
	SUPPLY AIR DUCT RISE	
	RETURN AIR DUCT DROP	
	RETURN AIR DUCT RISE	
	EXHAUST AIR DUCT DROP	
	EXHAUST AIR DUCT RISE	
	OUTSIDE AIR DUCT DROP	
	OUTSIDE AIR DUCT RISE	
	TURNING VANES	TV
	EXTRACTOR	
CO	CO_2 SENSOR	
DD	DUCT DETECTOR	DD
HD	HEAT DETECTOR	HD
SD	SMOKE DETECTOR	SD
M	MOTORIZED DAMPER	
	FIRE DAMPER W/MOTORIZED RESET AND ACCESS DOOR	
	FIRE DAMPER WITH ACCESS PANEL OR SECURITY BARS	
-OR-▲	FIRE DAMPER WITH ACCESS PANEL	FD
-OR-■	FIRE/SMOKE DAMPER WITH ACCESS PANEL	F/SD
	VOLUME CONTROL DAMPER WITH LOCKING QUADRANT	VCD
T	REMOTE T'STAT WITH SENSOR IN DUCT	
T AC-1	THERMOSTAT; THERMOSTAT LABEL EXAMPLE : THERMOSTAT FOR AC-1 MOUNT AT +48" AFF TO TOP OF BOX	T'STAT
	POINT OF CONNECTION TO EXISTING	POC
	BYPASS TIMER	BPT
	THERMOMETER	
	PRESSURE GAGE	
	SECURITY BARS	
	PETE'S PLUG	
	BALANCING COCK	
	BALL VALVE	
	BUTTERFLY VALVE	
	CHECK VALVE	
	CONCENTRIC REDUCER	
	TWO-WAY CONTROL VALVE	
	FLOW SWITCH	FS
	FLEXIBLE CONNECTION	FLEX
	GATE VALVE	
	GLOBE VALVE	
	INSTRUMENT WELL	
	PLUG VALVE	
	PRESSURE RELIEF VALVE	PRV
	"Y" TYPE STRAINER	
	UNION	
1	KEYNOTE	
A	GRILLE TAG	
EF 8	NEW EQUIPMENT TAG EXAMPLE: DESCRIPTION EF, MARK NUMBER 8	
2 M202	DETAIL REFERENCE EXAMPLE: DETAIL 2, SHEET M202	
3 M400	SECTION REFERENCE EXAMPLE: SECTION 3, SHEET M400	

Teter, LLP expressly reserves its common law copyright and other property rights in these plans. This document, the ideas and designs incorporated herein, as an instrument of professional service, is not to be used in whole or in part, for any other project without prior written authorization.

MARK	DATE	DESCRIPTION
	11/1/22	DSA BACKCHECK

FOR BID ONLY

TETER, LLP
FRESNO HEADQUARTERS
VISALIA | BAKERSFIELD | MODESTO | SAN LUIS OBISPO
ARCHITECTS ENGINEERS CONNECTED

TULARE CAMPUS CTE
COLLEGE OF THE SEQUOIAS
4999 E. BARDSLEY AVE.
TULARE, CA

DRAWING TITLE
MECHANICAL SCHEDULES, LEGENDS, AND NOTES

PROJECT NO.
21-12032

DRAWING
M001

\\tetr-file1\Users\matt.soderstrom_TETR\Documents\120324-M-COS Tulare CTE_matt.soderstrom.rvt
PLOT DATE: 10/30/2022 3:56:50 PM

MECHANICAL SCHEDULES

PACKAGE AIR CONDITIONING SCHEDULE - BUILDING D

DESIGNATION		HC-D1	HC-D2
VOLTS / PHASE		460 / 3	460 / 3
F.L.A.		12	12
MCA / MOCP (AMPS)		15 / 20	15 / 20
SEER / EER @ ARI		19.0 / 9.97	19.0 / 9.97
BLOWER	SUPPLY AIR (CFM)	2,000	2,000
	EXT. SP (IN. WC)	0.75	0.75
	MIN. O.S.A. (CFM)	475	475
	DCV MIN. O.S.A. (CFM)	190	190
	BHP	1.0	1.0
	RPM	2,108	2,108
	DRIVE	DIRECT	DIRECT
COOLING	NOMINAL TONS	5	5
	SENSIBLE (MBH)	41.7	41.7
	TOTAL (MBH)	53.3	53.3
	EADB / EAWB (°F)	80 / 67	80 / 67
	AMBIENT AIR (°F)	105	105
HEATING	INPUT CAP. (MBH)	60.0	60.0
	OUTPUT CAP. (MBH)	49.0	49.0
	FUEL	NATURAL GAS	NATURAL GAS
	AFUE (%)	81.0	81.0
FILTERS	QTY / SIZE (RETURN)	4 / 16"x16"x2"	4 / 16"x16"x2"
	TYPE	MERV 13	MERV 13
	PD (IN. WC)	0.3	0.3
MANUFACTURER		CARRIER	CARRIER
TYPE		GAS / ELECTRIC	GAS / ELECTRIC
MODEL NUMBER		48JCGV06A3M6	48JCGV06A3M6
SERVICE		D13 COMPUTER LAB	D14 COMPUTER LAB
OPER. WT (LBS)		840	840
ACCESSORIES		1,2	1,2

1. CEC TITLE 24 COMPLIANT INTEGRATED ECONOMIZER (MICROMETL), SEISMIC CALCULATED ROOF CURB SLOPED TO MATCH ROOF (MICROMETL).
2. CO2 SENSOR FOR DEMAND CONTROL VENTILATION.

PACKAGE AIR CONDITIONING SCHEDULE - BUILDING E

DESIGNATION		HC-E1	HC-E2
VOLTS / PHASE		460 / 3	460 / 3
F.L.A.		12.1	8.7
MCA / MOCP (AMPS)		15 / 20	11 / 15
SEER / EER @ ARI		15.0 / 11.0	20.0 / 9.72
BLOWER	SUPPLY AIR (CFM)	2,400	1,200
	EXT. SP (IN. WC)	0.75	0.6
	MIN. O.S.A. (CFM)	315	110
	DCV MIN. O.S.A. (CFM)	-	-
	BHP	1.39	0.7
	RPM	2,355	2,143
	DRIVE	DIRECT	DIRECT
COOLING	NOMINAL TONS	6	3
	SENSIBLE (MBH)	49.7	24.0
	TOTAL (MBH)	64.1	32.1
	EADB / EAWB (°F)	80 / 67	80 / 67
	AMBIENT AIR (°F)	105	105
HEATING	INPUT CAP. (MBH)	67.0	60.0
	OUTPUT CAP. (MBH)	54.0	49.0
	FUEL	NATURAL GAS	NATURAL GAS
	AFUE (%)	81.0	81.0
FILTERS	QTY / SIZE (RETURN)	4 / 16"x16"x2"	4 / 16"x16"x2"
	TYPE	MERV 13	MERV 13
	PD (IN. WC)	0.3	0.3
MANUFACTURER		CARRIER	CARRIER
TYPE		GAS / ELECTRIC	GAS / ELECTRIC
MODEL NUMBER		48FCDM07A3M6	48JCGV04A3M6
LOCATION		E1 INDUSTRIAL AUTOMATION TECHNOLOGY	E4 INDUSTRIAL AUTOMATION ROBOTICS
OPER. WT (LBS)		840	810
ACCESSORIES		1,2	1,2

1. CEC TITLE 24 COMPLIANT INTEGRATED ECONOMIZER (MICROMETL), SEISMIC CALCULATED ROOF CURB SLOPED TO MATCH ROOF (MICROMETL).
2. CO2 SENSOR FOR DEMAND CONTROL VENTILATION.

PACKAGE AIR CONDITIONING SCHEDULE - BUILDING F

DESIGNATION		HC-F1	HC-F2
VOLTS / PHASE		460 / 3	460 / 3
F.L.A.		12	12
MCA / MOCP (AMPS)		15 / 20	15 / 20
SEER / EER @ ARI		19.0 / 9.97	19.0 / 9.97
BLOWER	SUPPLY AIR (CFM)	2,000	2,000
	EXT. SP (IN. WC)	0.75	0.75
	MIN. O.S.A. (CFM)	325	330
	DCV MIN. O.S.A. (CFM)	130	130
	BHP	1.0	1.0
	RPM	2,108	2,108
	DRIVE	DIRECT	DIRECT
COOLING	NOMINAL TONS	5	5
	SENSIBLE (MBH)	41.7	41.7
	TOTAL (MBH)	53.3	53.3
	EADB / EAWB (°F)	80 / 67	80 / 67
	AMBIENT AIR (°F)	105	105
HEATING	INPUT CAP. (MBH)	60.0	60.0
	OUTPUT CAP. (MBH)	49.0	49.0
	FUEL	NATURAL GAS	NATURAL GAS
	AFUE (%)	81.0	81.0
FILTERS	QTY / SIZE (RETURN)	4 / 16"x16"x2"	4 / 16"x16"x2"
	TYPE	MERV 13	MERV 13
	PD (IN. WC)	0.3	0.3
MANUFACTURER		CARRIER	CARRIER
TYPE		GAS / ELECTRIC	GAS / ELECTRIC
MODEL NUMBER		48JCGV06A3M6	48JCGV06A3M6
SERVICE		F8 CLASSROOM	F26 CLASSROOM
OPER. WT (LBS)		840	840
ACCESSORIES		1,2	1,2

1. CEC TITLE 24 COMPLIANT INTEGRATED ECONOMIZER (MICROMETL), SEISMIC CALCULATED ROOF CURB SLOPED TO MATCH ROOF (MICROMETL).
2. CO2 SENSOR FOR DEMAND CONTROL VENTILATION.

OUTDOOR UNIT SCHEDULE - BUILDING D

DESIGNATION	ODU-D1	ODU-D2	ODU-D3
NAMEPLATE AMPS	21.0	21.0	15.3
VOLTS / PHASE	208 / 1	208 / 1	208 / 1
MCA / MOCP	35 / 50	35 / 50	25 / 35
EER / SEER	13.5 / 21.5	13.5 / 21.5	13 / 21.5
COOLING CAP. (MBH)	36.0	36.0	24.0
COOLING AMBIENT (°F)	105	105	105
HEATING CAP. (MBH)	36.0	36.0	24.0
HEATING AMBIENT (°F)	26	26	26
MANUFACTURER	CARRIER	CARRIER	CARRIER
TYPE	MULTI-ZONE HEAT PUMP	MULTI-ZONE HEAT PUMP	SINGLE ZONE HEAT PUMP
MODEL NUMBER	38MGRQ36D--3	38MGRQ36D--3	38MARBQ24
SERVICE	GENDER NEUTRAL RR'S	OFFICES / DISPLAY SPACE	COMM ROOM
OPER. WT. (LBS)	225	225	135
ACCESSORIES	-	-	-

OUTDOOR UNIT SCHEDULE - BUILDING E

DESIGNATION	ODU-E1	ODU-E2
NAMEPLATE AMPS	19.0	15.3
VOLTS / PHASE	208 / 1	208 / 1
MCA / MOCP	30 / 45	25 / 35
EER / SEER	12.5 / 23.8	13 / 21.5
COOLING CAP. (MBH)	29.0	24.0
COOLING AMBIENT (°F)	105	105
HEATING CAP. (MBH)	28.0	24.0
HEATING AMBIENT (°F)	26	26
MANUFACTURER	CARRIER	CARRIER
TYPE	MULTI-ZONE HEAT PUMP	SINGLE ZONE HEAT PUMP
MODEL NUMBER	38MGRQ30D--3	38MARBQ24
SERVICE	OFFICES	COMM ROOM
OPER. WT. (LBS)	160	135
ACCESSORIES	-	-

OUTDOOR UNIT SCHEDULE - BUILDING F

DESIGNATION	ODU-F1	ODU-F2	ODU-F3	ODU-F4	ODU-F5	ODU-F6	ODU-F7
NAMEPLATE AMPS	19.0	10.0	6.0	15.3	10.0	21.0	14.3
VOLTS / PHASE	208 / 1	208 / 1	208 / 1	208 / 1	208 / 1	208 / 1	208 / 1
MCA / MOCP	30 / 45	18 / 25	15 / 15	25 / 35	18 / 25	35 / 50	16 / 25
EER / SEER	12.5 / 23.8	12.5 / 22.5	13.0 / 20.0	13 / 21.5	12.5 / 22.5	12.5 / 22.4	12.5 / 20.0
COOLING CAP. (MBH)	29.0	18.0	9.0	24.0	18.0	48.0	16.0
COOLING AMBIENT (°F)	105	105	105	105	105	105	105
HEATING CAP. (MBH)	28.0	18.75	9.0	24.0	18.75	49.0	18.0
HEATING AMBIENT (°F)	26	26	28	26	26	26	26
MANUFACTURER	CARRIER	CARRIER	CARRIER	CARRIER	CARRIER	CARRIER	CARRIER
TYPE	MULTI-ZONE HEAT PUMP	MULTI-ZONE HEAT PUMP	SINGLE-ZONE HEAT PUMP	SINGLE ZONE HEAT PUMP	MULTI-ZONE HEAT PUMP	MULTI-ZONE HEAT PUMP	SINGLE-ZONE HEAT PUMP
MODEL NUMBER	38MGRQ30D--3	38MGRQ18B--3	38MARBQ09AA3	38MARBQ24	38MGRQ18B--3	38MGRQ48E--3	38MARBQ18AA3
SERVICE	G.N.R.R. & LACTATION	OFFICES	OFFICES	COMM ROOM	OFFICES	OFFICES / RECEPTION	G.N.R.R.
OPER. WT. (LBS)	160	110	75	135	110	225	105
ACCESSORIES	-	-	-	-	-	-	-

INDOOR UNIT SCHEDULE - BUILDING D

DESIGNATION		IDU-D1A	IDU-D1B	IDU-D2A	IDU-D2B	IDU-D2C	IDU-D3A
BLOWER	SUPPLY AIR (CFM)	420	420	380	380	480	719
	EXT. SP (IN. WC)	-	-	-	-	0.4	-
	MIN. O.S.A. (CFM)	-	-	20	20	70	-
	VOLTS / PHASE	208 / 1	208 / 1	208 / 1	208 / 1	208 / 1	208 / 1
	MCA / MOCP	0.2 / -	0.2 / -	0.2 / -	0.2 / -	1.2 / -	0.63 / -
	F.L.A.	-	-	-	-	-	-
	RPM	860	860	600	600	850	1,150
	DRIVE	DIRECT	DIRECT	DIRECT	DIRECT	DIRECT	DIRECT
COOLING	SENSIBLE (MBH)	13.5	13.5	6.8	6.8	13.5	18.0
	TOTAL (MBH)	18.0	18.0	9.0	9.0	18.0	24.0
	EADB / EAWB (°F)	80 / 67	80 / 67	80 / 67	80 / 67	80 / 67	80 / 67
HEATING	CAP. (MBH) @ 25°F	18.0	18.0	9.0	9.0	18.0	24.0
FILTERS	TYPE	CLEANABLE	CLEANABLE	CLEANABLE	CLEANABLE	MERV 13	CLEANABLE
MANUFACTURER		CARRIER	CARRIER	CARRIER	CARRIER	CARRIER	CARRIER
TYPE		CEILING CASSETTE	CEILING CASSETTE	CEILING CASSETTE	CEILING CASSETTE	CONCEALED DUCTED	HIGH WALL
MODEL NUMBER		40MBCQ18--3	40MBCQ18--3	40MBCQ09--3	40MBCQ09--3	40MBDQ18---3	40MAHBQ24
LOCATION		D1 GENDER NEUTRAL R.R.	D2 GENDER NEUTRAL R.R.	D4 OFFICE	D5 OFFICE	D6 DISPLAY SPACE	D12 COMM.
OPER. WT (LBS)		46	46	42	42	54	44
ACCESSORIES		1	1	1	1	1,4	1,2,3

1. WIRED WALL MOUNTED THERMOSTAT WITH BACNET INTERFACE.
2. REFRIGERANT LINE SET COVERS FOR EXPOSED PIPING IN ROOM. (AC COVER GUARD).
3. CONDENSATE LIFT PUMP (REFCO GOBI MODEL # 4678538).
4. FILTER BOX (MICROMETL FS-40MBDQ18).

INDOOR UNIT SCHEDULE - BUILDING E

DESIGNATION		IDU-E1A	IDU-E1B	IDU-E1C	IDU-E2A
BLOWER	SUPPLY AIR (CFM)	380	380	380	719
	EXT. SP (IN. WC)	-	-	-	-
	MIN. O.S.A. (CFM)	20	20	20	-
	VOLTS / PHASE	208 / 1	208 / 1	208 / 1	208 / 1
	MCA / MOCP	0.2 / -	0.2 / -	0.2 / -	0.63 / -
	F.L.A.	-	-	-	-
	RPM	600	600	600	1,150
	DRIVE	DIRECT	DIRECT	DIRECT	DIRECT
COOLING	SENSIBLE (MBH)	6.8	6.8	6.8	18.0
	TOTAL (MBH)	9.0	9.0	9.0	24.0
	EADB / EAWB (°F)	80 / 67	80 / 67	80 / 67	80 / 67
HEATING	CAP. (MBH) @ 25°F	9.0	9.0	9.0	24.0
FILTERS	TYPE	CLEANABLE	CLEANABLE	CLEANABLE	CLEANABLE
MANUFACTURER		CARRIER	CARRIER	CARRIER	CARRIER
TYPE		CEILING CASSETTE	CEILING CASSETTE	CEILING CASSETTE	HIGH WALL
MODEL NUMBER		40MBCQ09--3	40MBCQ09--3	40MBCQ09--3	40MHHC24
LOCATION		E2 OFFICE	E5 OFFICE	E6 OFFICE	E10 COMM.
OPER. WT (LBS)		42	42	42	44
ACCESSORIES		1	1	1	1,2,3

1. WIRED WALL MOUNTED THERMOSTAT WITH BACNET INTERFACE.
2. REFRIGERANT LINE SET COVERS FOR EXPOSED PIPING IN ROOM. (AC COVER GUARD).
3. CONDENSATE LIFT PUMP (REFCO GOBI MODEL # 4678538).

SUPPLY FAN SCHEDULE - BUILDING D

DESIGNATION	SF-D1
CFM	110
EXT. SP (IN. WC)	0.3
HP / BHP	1/15 / 0.02
VOLTS / PHASE	115 / 1
RPM	1,472
TIP SPEED / SONES	3,131 / 3.7
DRIVE	DIRECT
MOUNTING	IN-LINE
MANUFACTURER	GREENHECK
TYPE	CENTRIFUGAL
MODEL NUMBER	SQ-70-VG
CONTROL	INTERLOCK W/ ODU-D2
LOCATION	D6 DISPLAY SPACE
OPER. WT. (LBS)	32
ACCESSORIES	1

1. PROVIDE BACKDRAFT DAMPER, ECM MOTOR, AND NEOPRENE ISOLATOR HANGER.

SUPPLY FAN SCHEDULE - BUILDING E

DESIGNATION	SF-E1
CFM	60
EXT. SP (IN. WC)	0.3
HP / BHP	1/15 / 0.02
VOLTS / PHASE	115 / 1
RPM	1,493
TIP SPEED / SONES	3,176 / 3.6
DRIVE	DIRECT
MOUNTING	IN-LINE
MANUFACTURER	GREENHECK
TYPE	CENTRIFUGAL
MODEL NUMBER	SQ-60-VG
CONTROL	INTERLOCK W/ ODU-E1
LOCATION	E3 STORAGE
OPER. WT. (LBS)	32
ACCESSORIES	1

1. PROVIDE BACKDRAFT DAMPER, ECM MOTOR, AND NEOPRENE ISOLATOR HANGER.

SUPPLY FAN SCHEDULE - BUILDING F

DESIGNATION	SF-F1	SF-F2	SF-F3	SF-F4	SF-F5
CFM	25	40	20	40	190
EXT. SP (IN. WC)	0.25	0.3	0.25	0.25	0.3
HP / BHP	1/15 / 0.01	1/15 / 0.02	1/15 / 0.01	1/15 / 0.01	1/10 / 0.03
VOLTS / PHASE	115 / 1	115 / 1	115 / 1	115 / 1	115 / 1
RPM	1,270	1,430	1,270	1,316	1,272
TIP SPEED / SONES	2,701 / 2.4	3,041 / 3.1	2,701 / 2.4	2,799 / 2.5	3,621 / 5.2
DRIVE	DIRECT	DIRECT	DIRECT	DIRECT	DIRECT
MOUNTING	IN-LINE	IN-LINE	IN-LINE	IN-LINE	IN-LINE
MANUFACTURER	GREENHECK	GREENHECK	GREENHECK	GREENHECK	GREENHECK
TYPE	CENTRIFUGAL	CENTRIFUGAL	CENTRIFUGAL	CENTRIFUGAL	CENTRIFUGAL
MODEL NUMBER	SQ-60-VG	SQ-60-VG	SQ-60-VG	SQ-60-VG	SQ-80-VG
CONTROL	INTERLOCK W/ ODU-F1	INTERLOCK W/ ODU-F2	INTERLOCK W/ ODU-F3	INTERLOCK W/ ODU-F5	INTERLOCK W/ ODU-F6
LOCATION	F2 LACTATION	F5 OFFICE	F11 OFFICE	F21 OFFICE	F28 ASSISTANT/ PRINT/COPY
OPER. WT. (LBS)	32	32	32	32	43
ACCESSORIES	1	1	1	1	1

1. PROVIDE BACKDRAFT DAMPER, ECM MOTOR, AND NEOPRENE ISOLATOR HANGER.

\\tetr-file1\Users\matt.soderstrom_TETR\Documents\12032-M-COS Tulare CTE_matt.soderstrom.rvt

PLOT DATE: 10/30/2022 3:56:52 PM

FOR BID ONLY

Teter, LLP expressly reserves its common law copyright and other property rights in these plans. This document, the ideas and designs incorporated herein, as an instrument of professional service, is not to be used in whole or in part, for any other project without prior written authorization.

MARK	DATE	DESCRIPTION
	11/1/22	DSA BACKCHECK

TETER, LLP
ARCHITECTS ENGINEERS CONSULTANTS
FRESNO HEADQUARTERS
VISALIA | BAKERSFIELD | MODESTO | SAN LUIS OBISPO

TETER

TULARE CAMPUS CTE
COLLEGE OF THE SEQUOIAS
4999 E. BARDSLEY AVE.
TULARE, CA

DRAWING TITLE
MECHANICAL SCHEDULES

PROJECT NO.
21-12032

DRAWING
M002

\\tetr-file1\Users\matt.soderstrom_TETR\Documents\120324-M-COS Tulare CTE_matt.soderstrom.rvt

MECHANICAL SCHEDULES

INDOOR UNIT SCHEDULE - BUILDING F

DESIGNATION		IDU-F1A	IDU-F1B	IDU-F2A	IDU-F2B	IDU-F3A	IDU-F4A	IDU-F5A	IDU-F5B	IDU-F6A	IDU-F6B	IDU-F6C	IDU-F7A
BLOWER	SUPPLY AIR (CFM)	420	380	380	380	380	719	380	380	353	480	480	420
	EXT. SP (IN. WC)	-	-	-	-	-	-	-	-	0.2	0.4	0.4	-
	MIN. O.S.A. (CFM)	-	25	20	20	20	-	20	20	25	45	120	-
	VOLTS / PHASE	208 / 1	208 / 1	208 / 1	208 / 1	208 / 1	208 / 1	208 / 1	208 / 1	208 / 1	208 / 1	208 / 1	208 / 1
	MCA / MOCP	0.2 / -	0.2 / -	0.2 / -	0.2 / -	0.2 / -	0.63 / -	0.2 / -	0.2 / -	1.11 / -	1.2 / -	1.2 / -	0.2 / -
	F.L.A.	-	-	-	-	-	-	-	-	-	-	-	-
	RPM	860	600	600	600	600	1,150	600	600	1,350	450	450	860
	DRIVE	DIRECT	DIRECT	DIRECT	DIRECT	DIRECT	DIRECT	DIRECT	DIRECT	DIRECT	DIRECT	DIRECT	DIRECT
COOLING	SENSIBLE (MBH)	13.5	6.8	6.8	6.8	6.8	18.0	6.8	6.8	9.0	13.5	13.5	13.5
	TOTAL (MBH)	18.0	9.0	9.0	9.0	9.0	24.0	9.0	9.0	12.0	18.0	18.0	18.0
	EADB / EAWB (°F)	80 / 67	80 / 67	80 / 67	80 / 67	80 / 67	80 / 67	80 / 67	80 / 67	80 / 67	80 / 67	80 / 67	80 / 67
HEATING	CAP. (MBH) @ 25°F	18.0	9.0	9.0	9.0	9.0	24.0	9.0	9.0	12.0	18.0	18.0	18.0
FILTERS	TYPE	CLEANABLE	CLEANABLE	CLEANABLE	CLEANABLE	CLEANABLE	CLEANABLE	CLEANABLE	CLEANABLE	MERV 13	MERV 13	MERV 13	CLEANABLE
MANUFACTURER		CARRIER	CARRIER	CARRIER	CARRIER	CARRIER	CARRIER	CARRIER	CARRIER	CARRIER	CARRIER	CARRIER	CARRIER
TYPE		CEILING CASSETTE	CEILING CASSETTE	CEILING CASSETTE	CEILING CASSETTE	CEILING CASSETTE	HIGH WALL	CEILING CASSETTE	CEILING CASSETTE	CONCEALED DUCTED	CONCEALED DUCTED	CONCEALED DUCTED	CEILING CASSETTE
MODEL NUMBER		40MBCQ18--3	40MBCQ09--3	40MBCQ09--3	40MBCQ09--3	40MBCQ09--3	40MHHC24	40MBCQ09--3	40MBCQ09--3	40MBDQ12---3	40MBDQ18---3	40MBDQ18---3	40MBCQ18--3
LOCATION		F1 GENDER NEUTRAL R.R.	F2 LACTATION	F4 OFFICE	F5 OFFICE	F11 OFFICE	F12 COMM.	F20 OFFICE	F21 OFFICE	F27 DEAN'S OFFICE	F28 ASSISTANT	F29 MEETING	F30 GENDER NEUTRAL R.R.
OPER. WT (LBS)		46	42	42	42	42	44	42	42	45	55	55	46
ACCESSORIES		1	1	1	1	1	1,2,3	1	1	1,4	1,4	1,4	1

1. WIRED WALL MOUNTED THERMOSTAT WITH BACNET INTERFACE.
2. REFRIGERANT LINE SET COVERS FOR EXPOSED PIPING IN ROOM. (AC COVER GUARD).
3. CONDENSATE LIFT PUMP (REFCO GOBI MODEL # 4678538).
4. FILTER BOX (MICROMETL FS-40MBDQ).

EXHAUST FAN SCHEDULE - FIRE PUMP HOUSE

DESIGNATION	EF-P1
CFM	760
EXT. SP (IN. WC)	0.375
HP / BHP	1/4 / 0.14
VOLTS / PHASE	115 / 1
RPM	1,344
TIP SPEED / SONES	3,936 / 7.6
DRIVE	BELT
MOUNTING	WALL
MANUFACTURER	GREENHECK
TYPE	CENTRIFUGAL
MODEL NUMBER	CUBE-099
CONTROL	NOTE 1
LOCATION	FIRE PUMP HOUSE
OPER. WT. (LBS)	65
ACCESSORIES	1,2

1. PROVIDE CONTROL VIA WALL MOUNTED LINE THERMOSTAT WITH SET TEMPERATURE OF 80°F. SEE ELECTRICAL FOR WIRING.
2. PROVIDE BACKDRAFT DAMPER, AND MANUFACTURER'S WALL CURB.

ELECTRIC BASEBOARD HEATER SCHEDULE - FIRE PUMP HOUSE

DESIGNATION	EH-P1
VOLTS / PHASE	208 / 1
OUTPUT (MBH)	5.12
WATTS	1500
MANUFACTURER	MARLEY
TYPE	BASEBOARD HEATER
MODEL NUMBER	QMKC2506W
LOCATION	FIRE PUMP HOUSE
OPER. WT. (LBS)	15.5
ACCESSORIES	1

1. PROVIDE CONTROL VIA WALL MOUNTED LINE THERMOSTAT WITH SET TEMPERATURE OF 48°F. SEE ELECTRICAL FOR WIRING.

EXHAUST FAN SCHEDULE - BUILDING D

DESIGNATION	EF-D1	EF-D2	EF-D3	EF-D4	EF-D5	EF-D6	EF-D7
CFM	230	230	5,360	5,360	175	360	620
EXT. SP (IN. WC)	0.3	0.3	0.2	0.2	0.3	0.3	0.4
HP / BHP	83 WATTS	83 WATTS	2 / 0.66	2 / 0.66	99 WATTS	134 WATTS	116 WATTS
VOLTS / PHASE	115 / 1	115 / 1	208 / 1	208 / 1	115 / 1	115 / 1	115 / 1
RPM	1,000	1,000	644	644	750	1,308	1,126
TIP SPEED / SONES	1,767 / 3.0	1,767 / 3.0	4,132 / 12.3	4,132 / 12.3	1,325 / 0.3	2,312 / 2.5	2,840 / 1.0
DRIVE	DIRECT	DIRECT	DIRECT	DIRECT	DIRECT	DIRECT	DIRECT
MOUNTING	CEILING	CEILING	ROOF CURB	ROOF CURB	IN-LINE	IN-LINE	IN-LINE
MANUFACTURER	GREENHECK	GREENHECK	GREENHECK	GREENHECK	GREENHECK	GREENHECK	GREENHECK
TYPE	CENTRIFUGAL	CENTRIFUGAL	CENTRIFUGAL	CENTRIFUGAL	CENTRIFUGAL	CENTRIFUGAL	CENTRIFUGAL
MODEL NUMBER	SP-A250	SP-A250	CUE-240-VG	CUE-240-VG	CSP-A200	CSP-A390	CSP-A700-VG
CONTROL	EMS	EMS	EMS	EMS	EMS	EMS	EMS
LOCATION	D1 GENDER NEUTRAL R.R.	D2 GENDER NEUTRAL R.R.	D8 AUTOMOTIVE TECHNOLOGY	D8 AUTOMOTIVE TECHNOLOGY	D11 ELEC.	D3 MECH. STORAGE	D21 MECHANICAL PLATFORM
OPER. WT. (LBS)	24	24	190	190	25	25	40
ACCESSORIES	3,4	3,4	1,2	1,2	5	5	6

1. PROVIDE ECM MOTOR, BACKDRAFT DAMPER, AND BIRD SCREEN.
2. GALVANIZED ROOF CURB.
3. PROVIDE INSULATED CABINET, NEOPRENE SUSPENDED ISOLATOR KIT, AND SPEED CONTROLLER.
4. PROVIDE STAINLESS STEEL GRILLE.
5. PROVIDE BACKDRAFT DAMPER, SPEED CONTROLLER, AND NEOPRENE SUSPENDED ISOLATOR KIT.
6. PROVIDE BACKDRAFT DAMPER, ECM MOTOR, AND NEOPRENE SUSPENDED ISOLATOR KIT.

EXHAUST FAN SCHEDULE - BUILDING E

DESIGNATION	EF-E1	EF-E2
CFM	5,600	780
EXT. SP (IN. WC)	0.2	0.4
HP / BHP	2 / 0.74	146 WATTS
VOLTS / PHASE	208 / 1	115 / 1
RPM	670	1,095
TIP SPEED / SONES	4,296 / 13.2	2,160 / 1.3
DRIVE	DIRECT	DIRECT
MOUNTING	ROOF CURB	IN-LINE
MANUFACTURER	GREENHECK	GREENHECK
TYPE	CENTRIFUGAL	CENTRIFUGAL
MODEL NUMBER	CUE-240-VG	CSP-A1050-VG
CONTROL	EMS	EMS
LOCATION	E11 AGRICULTURAL MECHANICS	E21 MECHANICAL PLATFORM
OPER. WT. (LBS)	190	50
ACCESSORIES	1,2	6

1. PROVIDE ECM MOTOR, BACKDRAFT DAMPER, AND BIRD SCREEN.
2. GALVANIZED ROOF CURB.
3. PROVIDE INSULATED CABINET, NEOPRENE SUSPENDED ISOLATOR KIT, AND SPEED CONTROLLER.
4. PROVIDE STAINLESS STEEL GRILLE.
5. PROVIDE BACKDRAFT DAMPER, SPEED CONTROLLER, AND NEOPRENE SUSPENDED ISOLATOR KIT.
6. PROVIDE BACKDRAFT DAMPER, ECM MOTOR, AND NEOPRENE SUSPENDED ISOLATOR KIT.

EXHAUST FAN SCHEDULE - BUILDING F

DESIGNATION	EF-F1	EF-F2	EF-F3	EF-F4	EF-F5	EF-F6	EF-F7	EF-F8	EF-F9	EF-F10
CFM	230	1,800	1,400	2,100	2,100	1,050	230	100	200	100
EXT. SP (IN. WC)	0.3	0.2	0.2	0.2	0.2	0.3	0.3	0.25	0.3	0.25
HP / BHP	83 WATTS	0.5 / 0.33	0.25 / 0.17	0.5 / 0.34	0.5 / 0.34	0.25 / 0.15	83 WATTS	1/15 / 0.02	128 WATTS	1/15 / 0.02
VOLTS / PHASE	115 / 1	115 / 1	115 / 1	115 / 1	115 / 1	115 / 1	115 / 1	115 / 1	115 / 1	115 / 1
RPM	1,000	1,608	1,288	1,238	1,238	1,416	900	1,429	813	1,429
TIP SPEED / SONES	1,767 / 3.0	5,500 / 14.6	4,406 / 10.3	4,739 / 12.3	4,739 / 12.3	4,125 / 9.4	1,767 / 3.0	3,041 / 3.2	1,438 / 0.3	3,041 / 3.2
DRIVE	DIRECT	DIRECT	DIRECT	DIRECT	DIRECT	DIRECT	DIRECT	DIRECT	DIRECT	DIRECT
MOUNTING	CEILING	ROOF CURB	ROOF CURB	ROOF CURB	ROOF CURB	ROOF CURB	CEILING	ROOF CURB	IN-LINE	ROOF CURB
MANUFACTURER	GREENHECK	GREENHECK	GREENHECK	GREENHECK	GREENHECK	GREENHECK	GREENHECK	GREENHECK	GREENHECK	GREENHECK
TYPE	CENTRIFUGAL	CENTRIFUGAL	CENTRIFUGAL	CENTRIFUGAL	CENTRIFUGAL	CENTRIFUGAL	CENTRIFUGAL	CENTRIFUGAL	CENTRIFUGAL	CENTRIFUGAL
MODEL NUMBER	SP-A250	CUE-120-VG	CUE-120-VG	CUE-140-VG	CUE-140-VG	CUE-100-VG	SP-A250	CUE-060-VG	CSP-A200	CUE-060-VG
CONTROL	EMS	EMS	EMS	EMS	EMS	EMS	EMS	EMS	EMS	EMS
LOCATION	F1 GENDER NEUTRAL R.R.	F3 CONSTRUCTION TECHNOLOGY	F9 ELECTRICIAN TRAINING	F10 ENVIRONMENTAL CONTROLS LAB	F19 INDUSTRIAL MAINTENANCE LAB	F23 / F24 / F25 RESTROOMS / JANITOR	F30 GENDER NEUTRAL R.R.	F17 GAS STORAGE	F18 ELEC.	F14 ACET. GAS STOR.
OPER. WT. (LBS)	24	55	50	70	70	50	24	25	25	25
ACCESSORIES	3,4	1,2	1,2	1,2	1,2	1,2	3,4	1,2	5	1,2

1. PROVIDE ECM MOTOR, BACKDRAFT DAMPER, AND BIRD SCREEN.
2. GALVANIZED ROOF CURB.
3. PROVIDE INSULATED CABINET, NEOPRENE SUSPENDED ISOLATOR KIT, AND SPEED CONTROLLER.
4. PROVIDE STAINLESS STEEL GRILLE.
5. PROVIDE BACKDRAFT DAMPER, SPEED CONTROLLER, AND NEOPRENE SUSPENDED ISOLATOR KIT.

RELIEF VENT SCHEDULE - BUILDING D

DESIGNATION	RV-D1	RV-D2	RV-D3	RV-D4	RV-D5	RV-D6	RV-D7	RV-D8	RV-D9
CFM	7,650	7,650	220	220	2,000	2,000	175	360	620
EXT. SP (IN. WC)	0.08	0.08	0.02	0.02	0.04	0.04	0.02	0.04	0.03
SIZE	40x48	40x48	10	10	26x26	26x26	8x8	10x10	14x14
MOUNTING	ROOF CURB	ROOF CURB	ROOF CURB	ROOF CURB	ROOF CURB	ROOF CURB	ROOF CURB	ROOF CURB	ROOF CURB
MANUFACTURER	GREENHECK	GREENHECK	GREENHECK	GREENHECK	GREENHECK	GREENHECK	GREENHECK	GREENHECK	GREENHECK
MODEL NUMBER	FGR	FGR	GRSR	GRSR	FGR	FGR	FGR	FGR	FGR
LOCATION	D8 AUTOMOTIVE TECHNOLOGY	D8 AUTOMOTIVE TECHNOLOGY	D1 GENDER NEUTRAL R.R.	D2 GENDER NEUTRAL R.R.	D13 COMPUTER LAB	D14 COMPUTER LAB	D11 ELEC.	D3 MECH. STORAGE	D21 MECHANICAL PLATFORM
OPER. WT. (LBS)	150	150	10	10	85	85	40	40	45
ACCESSORIES	1,3	1,3	1,2	1,2	1,2	1,2	1	1	1

1. PROVIDE BIRD SCREEN, AND MANUFACTURER'S SLOPED ROOF CURB.
2. PROVIDE GRAVITY BACKDRAFT DAMPER.
3. PROVIDE 24V MOTORIZED VCD-20 CONTROL DAMPER.

RELIEF VENT SCHEDULE - BUILDING E

DESIGNATION	RV-E1	RV-E2	RV-E3	RV-E4
CFM	2,400	1,200	8,400	780
EXT. SP (IN. WC)	0.05	0.04	0.08	0.08
SIZE	28x28	20	42x50	12x12
MOUNTING	ROOF CURB	ROOF CURB	ROOF CURB	ROOF CURB
MANUFACTURER	GREENHECK	GREENHECK	GREENHECK	GREENHECK
MODEL NUMBER	FGR	GRSR	FGR	FGR
LOCATION	E1 INDUSTRIAL AUTOMATION TECHNOLOGY	E4 INDUSTRIAL AUTOMATION ROBOTICS	E11 AGRICULTURAL MECHANICS	E21 MECHANICAL PLATFORM
OPER. WT. (LBS)	90	30	170	40
ACCESSORIES	1,2	1,2	1,3	1

1. PROVIDE BIRD SCREEN, AND MANUFACTURER'S SLOPED ROOF CURB.
2. PROVIDE GRAVITY BACKDRAFT DAMPER.
3. PROVIDE 24V MOTORIZED VCD-20 CONTROL DAMPER.

RELIEF VENT SCHEDULE - BUILDING F

DESIGNATION	RV-F1	RV-F2	RV-F3	RV-F4	RV-F5	RV-F6	RV-F7	RV-F8	RV-F9
CFM	10,700	2,000	8,100	11,400	11,900	220	220	2,000	200
EXT. SP (IN. WC)	0.08	0.04	0.08	0.08	0.08	0.02	0.02	0.04	0.03
SIZE	48x56	26x26	40x52	48x60	46x66	10	10	26x26	8x8
MOUNTING	ROOF CURB	ROOF CURB	ROOF CURB	ROOF CURB	ROOF CURB	ROOF CURB	ROOF CURB	ROOF CURB	ROOF CURB
MANUFACTURER	GREENHECK	GREENHECK	GREENHECK	GREENHECK	GREENHECK	GREENHECK	GREENHECK	GREENHECK	GREENHECK
MODEL NUMBER	FGR	FGR	FGR	FGR	FGR	GRSR	GRSR	FGR	FGR
LOCATION	F3 CONSTRUCTION TECHNOLOGY	F8 CLASSROOM	F9 ELECTRICIAN TRAINING	F10 ENVIRONMENTAL CONTROLS LAB	F19 INDUSTRIAL MAINTENANCE LAB	F1 GENDER NEUTRAL R.R.	F30 GENDER NEUTRAL R.R.	F26 CLASSROOM	F18 ELEC.
OPER. WT. (LBS)	220	85	170	220	240	10	10	85	40
ACCESSORIES	1,3	1,2	1,3	1,3	1,3	1,2	1,2	1,2	1

1. PROVIDE BIRD SCREEN, AND MANUFACTURER'S SLOPED ROOF CURB.
2. PROVIDE GRAVITY BACKDRAFT DAMPER.
3. PROVIDE 24V MOTORIZED VCD-20 CONTROL DAMPER.

INTAKE VENT SCHEDULE - BUILDING D

DESIGNATION	IV-D1	IV-D2
CFM	13,000	13,000
EXT. SP (IN. WC)	0.1	0.1
SIZE	46x46	46x46
MOUNTING	ROOF CURB	ROOF CURB
MANUFACTURER	GREENHECK	GREENHECK
MODEL NUMBER	FGI	FGI
SERVICE	EC-D1	EC-D2
OPER. WT. (LBS)	250	250
ACCESSORIES	1	1

1. PROVIDE BIRD SCREEN, GRAVITY BACKDRAFT DAMPER, AND MANUFACTURER'S SLOPED ROOF CURB.

INTAKE VENT SCHEDULE - BUILDING E

DESIGNATION	IV-E1
CFM	14,000
EXT. SP (IN. WC)	0.1
SIZE	48x48
MOUNTING	ROOF CURB
MANUFACTURER	GREENHECK
MODEL NUMBER	FGI
SERVICE	EC-E1
OPER. WT. (LBS)	260
ACCESSORIES	1

1. PROVIDE BIRD SCREEN, GRAVITY BACKDRAFT DAMPER, AND MANUFACTURER'S SLOPED ROOF CURB.

INTAKE VENT SCHEDULE - BUILDING F

DESIGNATION	IV-F1	IV-F2	IV-F3	IV-F4
CFM	12,500	9,500	13,500	14,000
EXT. SP (IN. WC)	0.1	0.1	0.1	0.1
SIZE	46x46	40x40	48x48	38x62
MOUNTING	ROOF CURB	ROOF CURB	ROOF CURB	ROOF CURB
MANUFACTURER	GREENHECK	GREENHECK	GREENHECK	GREENHECK
MODEL NUMBER	FGI	FGI	FGI	FGI
SERVICE	EC-F1	EC-F2	EC-F3	EC-F4
OPER. WT. (LBS)	250	180	260	250
ACCESSORIES	1	1	1	1

1. PROVIDE BIRD SCREEN, GRAVITY BACKDRAFT DAMPER, AND MANUFACTURER'S SLOPED ROOF CURB.

PLOT DATE: 10/30/2022 3:56:53 PM

FOR BID ONLY

Teter, LLP expressly reserves its common law copyright and other property rights in these plans. This document, the ideas and designs incorporated herein, as an instrument of professional service, is not to be used in whole or in part, for any other project without prior written authorization.

MARK	DATE	DESCRIPTION
	11/1/22	DSA BACKCHECK

TETER, LLP
FRESNO HEADQUARTERS
VISALIA | BAKERSFIELD | MODESTO | SAN LUIS OBISPO
ARCHITECTS ENGINEERS CONNECTED

TULARE CAMPUS CTE
COLLEGE OF THE SEQUOIAS
4999 E. BARDSLEY AVE.
TULARE, CA

DRAWING TITLE
MECHANICAL SCHEDULES

PROJECT NO.
21-12032

DRAWING
M003

\\tetr-file1\Users\matt.soderstrom_TETR\Documents\12032-M-COS Tulare CTE_matt.soderstrom.rvt

MECHANICAL SCHEDULES

EVAPORATIVE COOLER SCHEDULE - BUILDING D

DESIGNATION		EC-D1	EC-D2
ELEC.	VOLTS / PHASE	460 / 3	460 / 3
	MCA / MOCP	18.1 / 25	18.1 / 25
	HP / BHP	7.5 / 5.9	7.5 / 5.9
BLOWER	SUPPLY AIR HIGH/LOW (CFM)	13,000 / 4,500	13,000 / 4,500
	EXT. SP (IN. WC)	0.5	0.5
	RPM	1,145	1,145
	QUANTITY	1	1
EVAPORATIVE MEDIA	TYPE	CELDEK	CELDEK
	THICKNESS (IN.)	12	12
	QUANTITY	8	8
	EADB / EAWB (°F)	103.6 / 73.7	103.6 / 73.7
	LADB / LAWB (°F)	77.0 / 73.7	77.0 / 73.7
FILTERS	QTY / SIZE	10 / 20"x25"x2"	10 / 20"x25"x2"
	TYPE	MERV 13	MERV 13
MANUFACTURER		GREENHECK	GREENHECK
TYPE		100% OSA	100% OSA
MODEL NUMBER		MSX-P127-H32-MF	MSX-P127-H32-MF
CONTROL		OFF/COOL/VENT	OFF/COOL/VENT
LOCATION		D21 MECHANICAL PLATFORM	D21 MECHANICAL PLATFORM
OPER. WT (LBS)		2,390	2,390
ACCESSORIES		3,4,5,6	2,4,5,6

1. END DISCHARGE.
2. RIGHT SIDE DISCHARGE.
3. LEFT SIDE DISCHARGE.
4. 2" ALUMINUM MESH INTAKE FILTERS.
5. WALL MOUNTED CONTROL PANEL WITH OFF/COOL/VENT SELECTOR SWITCH AND EMS TIE-IN TO ENABLE ON/OFF FOR OCCUPIED HOURS.
6. AUTO DRAIN & FILL VALVES & SOLENOIDS.

EVAPORATIVE COOLER SCHEDULE - BUILDING E

DESIGNATION		EC-E1
ELEC.	VOLTS / PHASE	460 / 3
	MCA / MOCP	18.1 / 25
	HP / BHP	7.5 / 7.1
BLOWER	SUPPLY AIR HIGH/LOW (CFM)	14,000 / 4,600
	EXT. SP (IN. WC)	0.5
	RPM	1,221
	QUANTITY	1
EVAPORATIVE MEDIA	TYPE	CELDEK
	THICKNESS (IN.)	12
	QUANTITY	8
	EADB / EAWB (°F)	103.6 / 73.7
	LADB / LAWB (°F)	77.1 / 73.7
FILTERS	QTY / SIZE	10 / 20"x25"x2"
	TYPE	MERV 13
MANUFACTURER		GREENHECK
TYPE		100% OSA
MODEL NUMBER		MSX-P127-H32-MF
CONTROL		OFF/COOL/VENT
LOCATION		E21 MECHANICAL PLATFORM
OPER. WT (LBS)		2,390
ACCESSORIES		2,4,5,6

1. END DISCHARGE.
2. RIGHT SIDE DISCHARGE.
3. LEFT SIDE DISCHARGE.
4. 2" ALUMINUM MESH INTAKE FILTERS.
5. WALL MOUNTED CONTROL PANEL WITH OFF/COOL/VENT SELECTOR SWITCH AND EMS TIE-IN TO ENABLE ON/OFF FOR OCCUPIED HOURS.
6. AUTO DRAIN & FILL VALVES & SOLENOIDS.

EVAPORATIVE COOLER SCHEDULE - BUILDING F

DESIGNATION		EC-F1	EC-F2	EC-F3	EC-F4
ELEC.	VOLTS / PHASE	460 / 3	460 / 3	460 / 3	460 / 3
	MCA / MOCP	21.9 / 35	13.9 / 20	18.1 / 25	18.1 / 25
	HP / BHP	10 / 5.4	5 / 2.8	7.5 / 6.4	7.5 / 6.1
BLOWER	SUPPLY AIR HIGH/LOW (CFM)	12,500 / 5,400	9,500 / 3,600	13,500 / 4,500	14,000 / 4,700
	EXT. SP (IN. WC)	0.5	0.5	0.5	0.5
	RPM	1,331	1,060	1,183	1,172
	QUANTITY	1	1	1	1
EVAPORATIVE MEDIA	TYPE	CELDEK	CELDEK	CELDEK	CELDEK
	THICKNESS (IN.)	12	12	12	12
	QUANTITY	8	8	8	8
	EADB / EAWB (°F)	103.6 / 73.7	103.6 / 73.7	103.6 / 73.7	103.6 / 73.7
	EADB / EAWB (°F)	76.9 / 73.7	76.6 / 73.7	77.0 / 73.7	77.1 / 73.7
FILTERS	QTY / SIZE	10 / 20"x25"x2"	10 / 20"x25"x2"	10 / 20"x25"x2"	10 / 20"x25"x2"
	TYPE	MERV 13	MERV 13	MERV 13	MERV 13
MANUFACTURER		GREENHECK	GREENHECK	GREENHECK	GREENHECK
TYPE		100% OSA	100% OSA	100% OSA	100% OSA
MODEL NUMBER		MSX-P124-H32-MF	MSX-P124-H32-MF	MSX-P127-H32-MF	MSX-P127-H32-MF
CONTROL		OFF/COOL/VENT	OFF/COOL/VENT	OFF/COOL/VENT	OFF/COOL/VENT
LOCATION		F40 MECHANICAL PLATFORM	F40 MECHANICAL PLATFORM	F41 MECHANICAL PLATFORM	F42 MECHANICAL PLATFORM
OPER. WT (LBS)		2,420	2,320	2,390	2,390
ACCESSORIES		3,4,5,6	3,4,5,6	3,4,5,6	1,4,5,6

1. END DISCHARGE.
2. RIGHT SIDE DISCHARGE.
3. LEFT SIDE DISCHARGE.
4. 2" ALUMINUM MESH INTAKE FILTERS.
5. WALL MOUNTED CONTROL PANEL WITH OFF/COOL/VENT SELECTOR SWITCH AND EMS TIE-IN TO ENABLE ON/OFF FOR OCCUPIED HOURS.
6. AUTO DRAIN & FILL VALVES & SOLENOIDS.

INFRARED RADIANT HEATER SCHEDULE - BUILDING D

DESIGNATION		IR-D1	IR-D2	IR-D3
BLOWER	INPUT (MBH)	115.0	115.0	115.0
	TUBE LENGTH (FT)	30	30	30
	VOLTS / PHASE	120 / 1	120 / 1	120 / 1
	AMPS (START / RUN)	4.8 / 1.3	4.8 / 1.3	4.8 / 1.3
	MOUNTING HEIGHT	18.0	18.0	18.0
MANUFACTURER		ROBERTS GORDON	ROBERTS GORDON	ROBERTS GORDON
TYPE		MODULATING	MODULATING	MODULATING
MODEL NUMBER		CTH13-115	CTH13-115	CTH13-115
LOCATION		D8 AUTOMOTIVE TECHNOLOGY	D8 AUTOMOTIVE TECHNOLOGY	D8 AUTOMOTIVE TECHNOLOGY
OPER. WT (LBS)		165	165	165
ACCESSORIES		1,2	1,2	1,2

1. PROVIDE HIGH EFFICIENCY ALUMINUM REFLECTORS.
2. INTERMATIC FF6H SIX HOUR TWIST TIMER OUT AND ZONE TEMPERATURE SENSOR WITH ADJUSTABLE SET POINT. HEATERS TIED TO ONE COMMON CONTROL PER ZONE. EMS TIE-IN TO ENABLE ON/OFF FOR OCCUPIED HOURS.

INFRARED RADIANT HEATER SCHEDULE - BUILDING E

DESIGNATION		IR-E1	IR-E2
BLOWER	INPUT (MBH)	80.0	80.0
	TUBE LENGTH (FT)	20	20
	VOLTS / PHASE	120 / 1	120 / 1
	AMPS (START / RUN)	4.8 / 1.3	4.8 / 1.3
	MOUNTING HEIGHT	19.0	19.0
MANUFACTURER		ROBERTS GORDON	ROBERTS GORDON
TYPE		MODULATING	MODULATING
MODEL NUMBER		CTH3-80	CTH3-80
LOCATION		E11 AGRICULTURAL MECHANICS	E11 AGRICULTURAL MECHANICS
OPER. WT (LBS)		130	130
ACCESSORIES		1,2	1,2

1. PROVIDE HIGH EFFICIENCY ALUMINUM REFLECTORS.
2. INTERMATIC FF6H SIX HOUR TWIST TIMER OUT AND ZONE TEMPERATURE SENSOR WITH ADJUSTABLE SET POINT. HEATERS TIED TO ONE COMMON CONTROL PER ZONE. EMS TIE-IN TO ENABLE ON/OFF FOR OCCUPIED HOURS.

INFRARED RADIANT HEATER SCHEDULE - BUILDING F

DESIGNATION		IR-F1	IR-F2	IR-F3	IR-F4	IR-F5	IR-F6	IR-F7	IR-F8
BLOWER	INPUT (MBH)	80.0	80.0	80.0	80.0	80.0	80.0	80.0	80.0
	TUBE LENGTH (FT)	30	30	20	20	30	30	30	30
	VOLTS / PHASE	120 / 1	120 / 1	120 / 1	120 / 1	120 / 1	120 / 1	120 / 1	120 / 1
	AMPS (START / RUN)	4.8 / 1.3	4.8 / 1.3	4.8 / 1.3	4.8 / 1.3	4.8 / 1.3	4.8 / 1.3	4.8 / 1.3	4.8 / 1.3
	MOUNTING HEIGHT	18.0	18.0	18.0	18.0	18.0	18.0	18.0	18.0
MANUFACTURER		ROBERTS GORDON	ROBERTS GORDON	ROBERTS GORDON	ROBERTS GORDON	ROBERTS GORDON	ROBERTS GORDON	ROBERTS GORDON	ROBERTS GORDON
TYPE		MODULATING	MODULATING	MODULATING	MODULATING	MODULATING	MODULATING	MODULATING	MODULATING
MODEL NUMBER		CTH3-80	CTH3-80	CTH3-80	CTH3-80	CTH3-80	CTH3-80	CTH3-80	CTH3-80
LOCATION		F3 CONSTRUCTION TECHNOLOGY	F3 CONSTRUCTION TECHNOLOGY	F9 ELECTRICIAN TRAINING	F9 ELECTRICIAN TRAINING	F10 ENVIRONMENTAL CONTROLS LAB	F10 ENVIRONMENTAL CONTROLS LAB	F19 INDUSTRIAL MAINTENANCE LAB	F19 INDUSTRIAL MAINTENANCE LAB
OPER. WT (LBS)		165	165	130	130	165	165	165	165
ACCESSORIES		1,2	1,2	1,2	1,2	1,2	1,2	1,2	1,2

1. PROVIDE HIGH EFFICIENCY ALUMINUM REFLECTORS.
2. INTERMATIC FF6H SIX HOUR TWIST TIMER OUT AND ZONE TEMPERATURE SENSOR WITH ADJUSTABLE SET POINT. HEATERS TIED TO ONE COMMON CONTROL PER ZONE. EMS TIE-IN TO ENABLE ON/OFF FOR OCCUPIED HOURS.

DUST COLLECTOR SCHEDULE - BUILDING F

DESIGNATION	DC-1
AIRFLOW (CFM)	6,800
HP (BLOWER)	20
HP (SHAKER)	(2) 1/3
EXT. SP (IN. WC)	8.0
VOLTS / PHASE	460 / 3
FILTER TYPE / SIZE	MULTI-POCKET / 24"x30"
FILTER AREA (SQ. FT.)	960
MANUFACTURER	STERNVENT
TYPE	SAWDUST
MODEL NUMBER	DKPD 960
CONTROL	CONTROL PANEL
SERVICE	F3 CONSTRUCTION TECHNOLOGY
OPER. WT. (LBS)	4,000
ACCESSORIES	1,2,3,4

1. EXPLOSION RELIEF DOOR (SEE M220 FOR LOCATION).
2. REMOTE VFD MOTOR CONTROLLER.
3. IBC SEISMIC & WIND CONSTRUCTION.
4. ABORT GATE (HANSENTEK 28x28 WITH 180° COWL) INTERLOCKED WITH SPARK DETECTION SYSTEM (HANSENTEK AN104).

VEHICLE EXHAUST REEL SCHEDULE - BUILDING D

DESIGNATION	ER-D1	ER-D2	ER-D3	ER-D4	ER-D5	ER-D6	ER-D7	ER-D8	ER-D9
CFM	600	600	600	600	600	600	1,400	1,400	600
EXT. SP (IN. WC)	3"	3"	3"	3"	3"	3"	6"	6"	3"
HP	0.75	0.75	0.75	0.75	0.75	0.75	3.0	3.0	0.75
VOLTS / PHASE	460 / 3	460 / 3	460 / 3	460 / 3	460 / 3	460 / 3	460 / 3	460 / 3	460 / 3
FAN MODEL NUMBER	CMW-9	CMW-9	CMW-9	CMW-9	CMW-9	CMW-9	BXI-15A0	BXI-15A0	CMW-9
FAN ORIENTATION	C.C.W. - TOP HORIZ.	C.W. - UP BLAST	C.C.W. - TOP HORIZ.	C.W. - UP BLAST	C.C.W. - TOP HORIZ.	C.W. - UP BLAST	C.C.W. - TOP HORIZ.	C.W. - TOP HORIZ.	C.W. - UP BLAST
HOSE	LTX 5" x 25 FT	LTX 5" x 25 FT	LTX 5" x 25 FT	LTX 5" x 25 FT	LTX 5" x 25 FT	LTX 5" x 25 FT	HTN 8" x 25 FT	HTN 8" x 25 FT	LTX 5" x 25 FT
MOUNTING	OVERHEAD REEL	OVERHEAD REEL	OVERHEAD REEL	OVERHEAD REEL	OVERHEAD REEL	OVERHEAD REEL	OVERHEAD REEL	OVERHEAD REEL	OVERHEAD REEL
REEL MODEL NUMBER	TSR-S32	TSR-S32	TSR-S32	TSR-S32	TSR-S32	TSR-S32	TSR-S36	TSR-S36	TSR-S32
TYPE	SPRING OPERATED	SPRING OPERATED	SPRING OPERATED	SPRING OPERATED	SPRING OPERATED	SPRING OPERATED	SPRING OPERATED	SPRING OPERATED	SPRING OPERATED
MANUFACTURER	CAR-MON	CAR-MON	CAR-MON	CAR-MON	CAR-MON	CAR-MON	CAR-MON	CAR-MON	CAR-MON
LOCATION	D8 AUTOMOTIVE TECHNOLOGY	D8 AUTOMOTIVE TECHNOLOGY	D8 AUTOMOTIVE TECHNOLOGY	D8 AUTOMOTIVE TECHNOLOGY	D8 AUTOMOTIVE TECHNOLOGY	D8 AUTOMOTIVE TECHNOLOGY	D8 AUTOMOTIVE TECHNOLOGY	D8 AUTOMOTIVE TECHNOLOGY	D6 DISPLAY SPACE
OPER. WT. (LBS)	265	265	265	265	265	265	600	600	265
ACCESSORIES	1,3,4,7	1,3,4,7	1,3,4,7	1,3,4,8	1,3,4,8	1,3,4,8	2,3,4,5,6	2,3,4,5,6	1,3,4

1. PROVIDE RSC EPDM HOSE ADAPTER.
2. PROVIDE CTA HOSE ADAPTER.
3. PROVIDE BACKDRAFT DAMPER.
4. PROVIDE MICROSWITCH FAN CONTROL.
5. PROVIDE FACTORY EXHAUST FAN PLATFORM FOR CEILING SUSPENSION.
6. PROVIDE Y SERIES DUAL FITTING ADAPTER WITH (2) HTN 6" x 5' FT HOSES AND (2) CTA HOSE ADAPTERS.
7. PROVIDE RYA-3 EPDM DUAL CONNECTION ADAPTER.
8. PROVIDE FDE DUAL EXHAUST ADAPTER.

VEHICLE EXHAUST REEL SCHEDULE - BUILDING E

DESIGNATION	ER-E1	ER-E2	ER-E3	ER-E4	ER-E5
CFM	300	300	300	300	900
EXT. SP (IN. WC)	-	-	-	-	4"
HP	-	-	-	-	1.0
VOLTS / PHASE	-	-	-	-	460 / 3
FAN MODEL NUMBER	SEE VEF-E1	SEE VEF-E1	SEE VEF-E1	SEE VEF-E1	CMW-11
FAN ORIENTATION	-	-	-	-	C.W. - UP BLAST
HOSE	LTX 4" x 25 FT	LTX 4" x 25 FT	LTX 4" x 25 FT	LTX 4" x 25 FT	HTC 6" x 25 FT
MOUNTING	OVERHEAD REEL	OVERHEAD REEL	OVERHEAD REEL	OVERHEAD REEL	OVERHEAD REEL
REEL MODEL NUMBER	TSR-S24	TSR-S24	TSR-S24	TSR-S24	TSR-S32
TYPE	SPRING OPERATED	SPRING OPERATED	SPRING OPERATED	SPRING OPERATED	SPRING OPERATED
MANUFACTURER	CAR-MON	CAR-MON	CAR-MON	CAR-MON	CAR-MON
LOCATION	E11 AGRICULTURAL MECHANICS	E11 AGRICULTURAL MECHANICS	E11 AGRICULTURAL MECHANICS	E11 AGRICULTURAL MECHANICS	E11 AGRICULTURAL MECHANICS
OPER. WT. (LBS)	165	165	165	165	270
ACCESSORIES	1	1	1	1	2,3,4

1. PROVIDE RSC EPDM HOSE ADAPTER.
2. PROVIDE RCT EPDM HOSE ADAPTER.
3. PROVIDE BACKDRAFT DAMPER.
4. PROVIDE MICROSWITCH FAN CONTROL.

VEHICLE EXHAUST FAN SCHEDULE - BUILDING E

DESIGNATION	VEF-E1
CFM	1,200
EXT. SP (IN. WC)	4.0
HP	1.5
VOLTS / PHASE	460 / 3
FAN MODEL NUMBER	CMB-14
FAN ORIENTATION	C.W. - UP BLAST
MOUNTING	SUSPENDED
TYPE	BELT DRIVE, B.I.
MANUFACTURER	CAR-MON
LOCATION	E11 AGRICULTURAL MECHANICS
OPER. WT. (LBS)	280
ACCESSORIES	1,2,3

1. PROVIDE BACKDRAFT DAMPER.
2. PROVIDE WALL SWITCH.
3. PROVIDE FACTORY EXHAUST FAN MOUNTING PLATFORM FOR CEILING SUSPENSION.

WELDING EXHAUST SCHDULE - BUILDING F

DESIGNATION		WE-1	WE-2	WE-3	WE-4
WELD FUME FILTER	CFM	1,200	1,200	1,200	1,200
	FILTER MEDIA	CELLULOSE	CELLULOSE	CELLULOSE	CELLULOSE
	FILTER EFFECIENCY	MERV 14	MERV 14	MERV 14	MERV 14
	FILTER AREA (FT2)	538	538	538	538
	TYPE	DUAL ARM	DUAL ARM	DUAL ARM	DUAL ARM
	MOUNTING	WALL MOUNTED	WALL MOUNTED	WALL MOUNTED	WALL MOUNTED
	MODEL NUMBER	PRISM K1654-5	PRISM K1654-5	PRISM K1654-5	PRISM K1654-5
	WEIGHT (LBS)	105	105	105	105
EXTRACTOR ARM / FAN (X2)	CFM	735	735	735	735
	HP / WATTS	1 / 750	1 / 750	1 / 750	1 / 750
	VOLTS / PHASE	115 / 1	115 / 1	115 / 1	115 / 1
	DRIVE	DIRECT	DIRECT	DIRECT	DIRECT
	MOUNTING	WALL MOUNTED	WALL MOUNTED	WALL MOUNTED	WALL MOUNTED
	TYPE	CENTRIFUGAL	CENTRIFUGAL	CENTRIFUGAL	CENTRIFUGAL
	ARM LENGTH (FT)	5-8.2	5-8.2	5-8.2	5-8.2
	MODEL NUMBER	K1655-14 / K1656-9	K1655-14 / K1656-9	K1655-14 / K1656-9	K1655-14 / K1656-9
	WEIGHT (LBS)	90	90	90	90
MANUFACTURER		LINCOLN ELECTRIC	LINCOLN ELECTRIC	LINCOLN ELECTRIC	LINCOLN ELECTRIC
PACKAGE MODEL #		K4261-11	K4261-11	K4261-11	K4261-11
CONTROL		STARTER / OVERLOAD SWITCH	STARTER / OVERLOAD SWITCH	STARTER / OVERLOAD SWITCH	STARTER / OVERLOAD SWITCH
LOCATION		F19 INDUSTRIAL MAINTENANCE LAB	F19 INDUSTRIAL MAINTENANCE LAB	F19 INDUSTRIAL MAINTENANCE LAB	F19 INDUSTRIAL MAINTENANCE LAB
TOTAL OPER. WT (LBS)		195	195	195	195
ACCESSORIES		1	1	1	1

1. PROVIDE WALL MOUNTING BRACKETS, CONNECTOR HOSES, HOSE CLAMPS, TWO NON-RETURN VALVES.

PLOT DATE: 10/30/2022 3:56:55 PM

FOR BID ONLY

Teter, LLP expressly reserves its common law copyright and other property rights in these plans. This document, the ideas and designs incorporated herein, as an instrument of professional service, is not to be used in whole or in part, for any other project without prior written authorization.

MARK	DATE	DESCRIPTION
	11/1/22	DSA BACKCHECK

TETER, LLP
ARCHITECTS ENGINEERS CONNECTED
FRESNO HEADQUARTERS
VISALIA | BAKERSFIELD | MODESTO | SAN LUIS OBISPO

TULARE CAMPUS CTE
COLLEGE OF THE SEQUOIAS
4999 E. BARDSLEY AVE.
TULARE, CA

DRAWING TITLE
MECHANICAL SCHEDULES

PROJECT NO.
21-12032

DRAWING
M004

\\tetr-file1\Users\matt.soderstrom_TETR\Documents\12032-M-COS Tulare CTE_matt.soderstrom.rvt

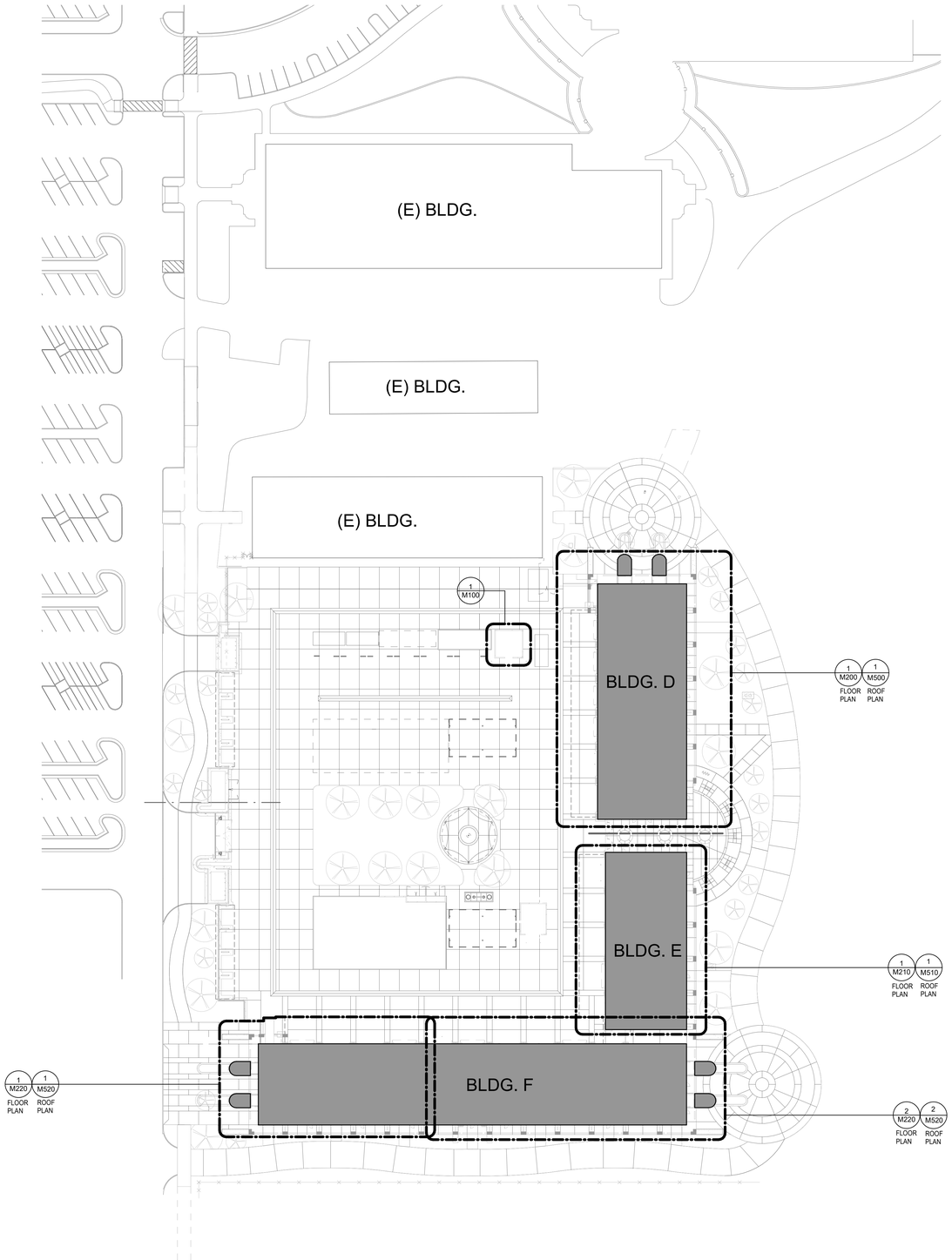

NORTH

MECHANICAL SITE PLAN 1" = 40'-0" 2

KEYNOTES

1 WALL MOUNTED EXHAUST FAN. SEE 4/M801 FOR DETAIL.
2 ELECTRIC BASEBOARD HEATER MOUNTED AT 0'-6" AFF ON WALL PER MANUFACTURER'S INSTRUCTIONS.
3 LINE THERMOSTAT MOUNTED ON WALL AT +48" AFF TO TOP OF BOX. SEE ELECTRICAL FOR WIRING.

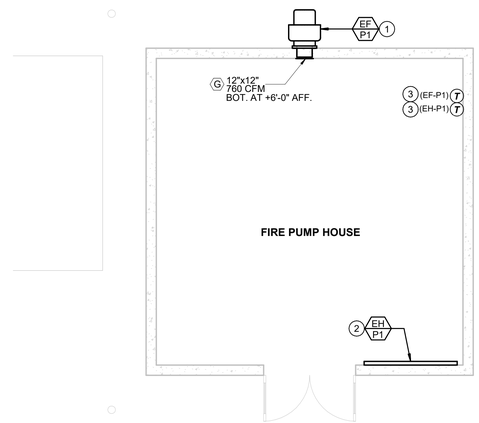

NORTH

ENLARGED MECHANICAL SITE PLAN - FIRE PUMP HOUSE 1/4" = 1'-0" 1

FOR BID ONLY

Teter, LLP expressly reserves its common law copyright and other property rights in these plans. This document, the ideas and designs incorporated herein, as an instrument of professional service, is not to be used in whole or part, for any other project without prior written authorization.

MARK	DATE	DESCRIPTION
	11/1/22	DSA BACKCHECK

TETER, LLP
ARCHITECTS ENGINEERS CONNECTED
FRESNO HEADQUARTERS
VISALIA | BAKERSFIELD | MODESTO | SAN LUIS OBISPO

TETER

TULARE CAMPUS CTE
COLLEGE OF THE SEQUOIAS
4999 E. BARDSLEY AVE.
TULARE, CA

DRAWING TITLE
MECHANICAL SITE PLAN

PROJECT NO.
21-12032

DRAWING
M100

PLOT DATE: 10/30/2022 3:57:02 PM

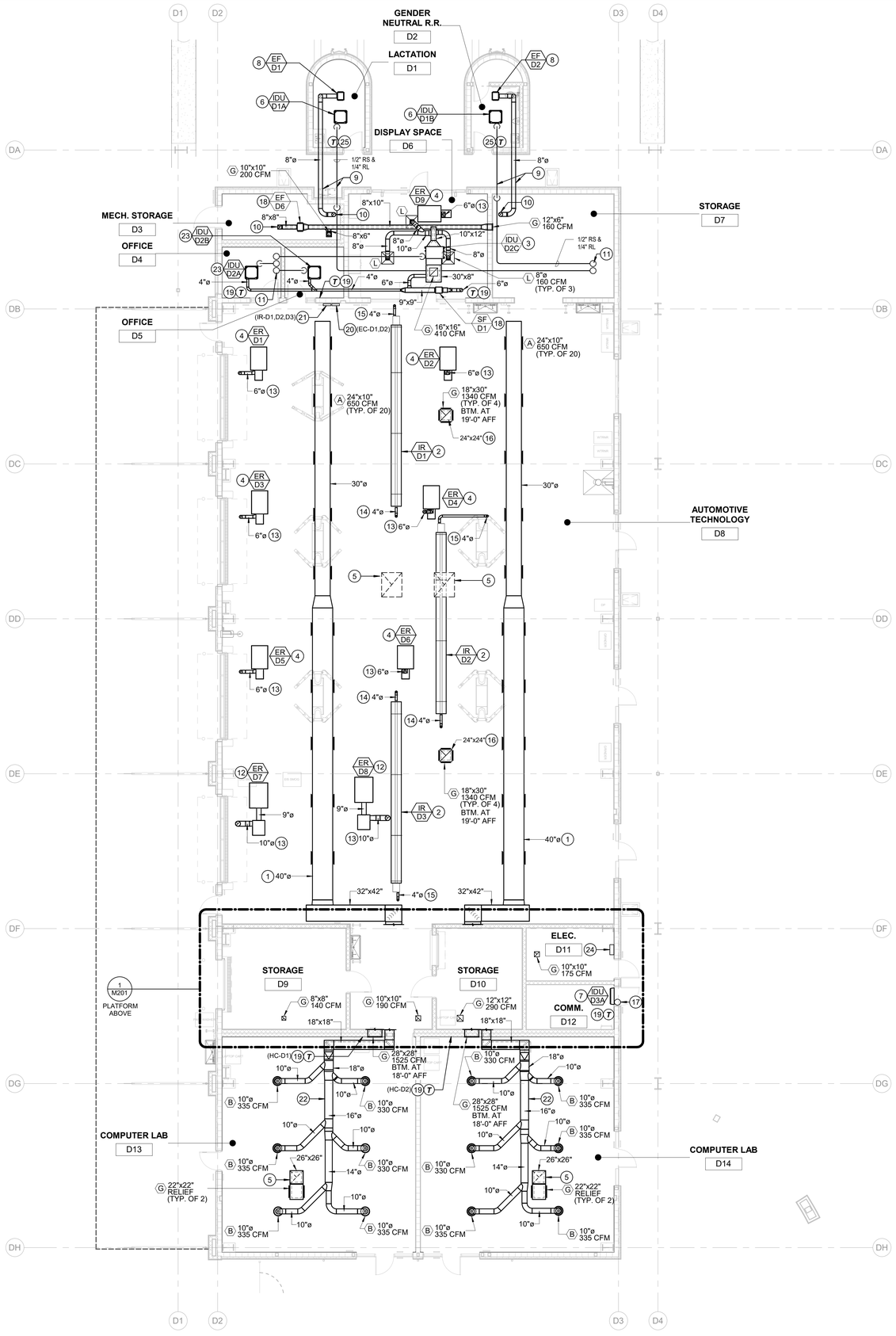

KEYNOTES

1. SUPPLY DUCT SUSPENDED FROM STRUCTURE AT 18'-0" AFF TO CENTER OF DUCT. SEE 23/M800 FOR DETAIL.
2. RADIANT TUBE HEATER SUSPENDED FROM STRUCTURE. AT +18'-0" AFF. SEE 15/M800 FOR DETAIL.
3. DUCTED INDOOR FAN COIL SUSPENDED FROM STRUCTURE. SEE 28/M800 FOR DETAIL.
4. VEHICLE EXHAUST HOSE REEL AND FAN SUSPENDED FROM STRUCTURE. SEE 16/M800 FOR DETAIL. BOTTOM AT 18'-0" AFF.
5. RELIEF HOOD ON ROOF. SEE M500.
6. CEILING CASSETTE INDOOR FAN COIL. SEE 12/M800 FOR DETAIL.
7. WALL MOUNTED INDOOR FAN COIL. SEE 13&14/M800 FOR DETAIL.
8. CEILING MOUNTED EXHAUST FAN. SEE 10/M800 FOR DETAIL.
9. ROUTE EA DUCT AND REFRIGERANT PIPING ABV. CLG. OVER COVERED WALK.
10. EA DUCT UP TO RELIEF VENT ON ROOF. SEE M500.
11. REFRIGERANT PIPING UP TO ODU ON ROOF. SEE M500.
12. VEHICLE EXHAUST HOSE REEL AND FAN SUSPENDED FROM STRUCTURE. SEE DETAILS 16&26/M800 FOR DETAIL. BOTTOM AT 18'-0" AFF.
13. VEHICLE EXHAUST DUCT FROM FAN OUTLET UP THRU ROOF. SEE M500.
14. RADIANT HEATER FLUE UP THRU ROOF. SEE M500.
15. RADIANT HEATER COMBUSTION AIR INTAKE UP THRU ROOF. SEE M500.
16. EA DUCT UP TO EXHAUST FAN ON ROOF. SEE M500.
17. 5/8" RS & 3/8" RL DOWN FROM ABOVE. SEE M201 FOR CONT.
18. IN-LINE FAN SUSPENDED FROM STRUCTURE. SEE 27/M800 FOR DETAIL.
19. INSTALL THERMOSTAT AT +48" AFF TO TOP OF BOX.
20. INSTALL EVAPORATIVE COOLER CONTROL PANEL AT +48" AFF TO TOP OF PANEL.
21. INSTALL RADIANT HEATER CONTROL PANEL AT +48" AFF TO TOP OF PANEL.
22. SUPPLY DUCT SUSPENDED FROM STRUCTURE AT 20'-0" AFF TO CENTER OF DUCT. SEE 29/M800 FOR DETAIL.
23. CEILING CASSETTE INDOOR FAN COIL. SEE 12/M800 FOR DETAIL.
24. BUILDING EMS PANEL.
25. INSTALL TEMPERATURE SENSOR AT +48" AFF TO TOP OF BOX.

GENERAL NOTES

A. SEE DETAILS 23,24&29/M800 FOR TYPICAL DUCT SUPPORTS.
B. SEE DETAILS 29&30/M800 FOR TYPICAL DIFFUSERS.
C. SEE DETAIL 25/M800 FOR TYPICAL BRANCH DUCT DETAILS.
D. SEE DETAIL 3/M801 FOR TYPICAL REFRIGERANT PIPE SUPPORTS.
E. DUCT SIZES SHOWN ARE INSIDE CLEAR DIMENSIONS. WHERE INTERNAL LINING IS SHOWN OR SPECIFIED, INCREASE FABRICATED DUCT DIMENSIONS TO ACCOMMODATE.

NORTH

MECHANICAL FLOOR PLAN - BUILDING D | 1/8" = 1'-0" | 1

FOR BID ONLY

Teter, LLP expressly reserves its common law copyright and other property rights in these plans. This document, the ideas and designs incorporated herein, as an instrument of professional service, is not to be used in whole or part, for any other project without prior written authorization.

MARK	DATE	DESCRIPTION
	11/1/22	DSA BACKCHECK

TETER, LLP
FRESNO HEADQUARTERS
VISALIA | BAKERSFIELD | MODESTO | SAN LUIS OBISPO
ARCHITECTS ENGINEERS CONNECTED

TULARE CAMPUS CTE
COLLEGE OF THE SEQUOIAS
4999 E. BARDSLEY AVE.
TULARE, CA

DRAWING TITLE
MECHANICAL FLOOR PLAN - BUILDING D

PROJECT NO.
21-12032

DRAWING
M200

\\tetr-file1\Users\matt.soderstrom_TETR\Documents\12032-M-COS Tulare CTE_matt.soderstrom.rvt
PLOT DATE: 10/30/2022 3:57:31 PM

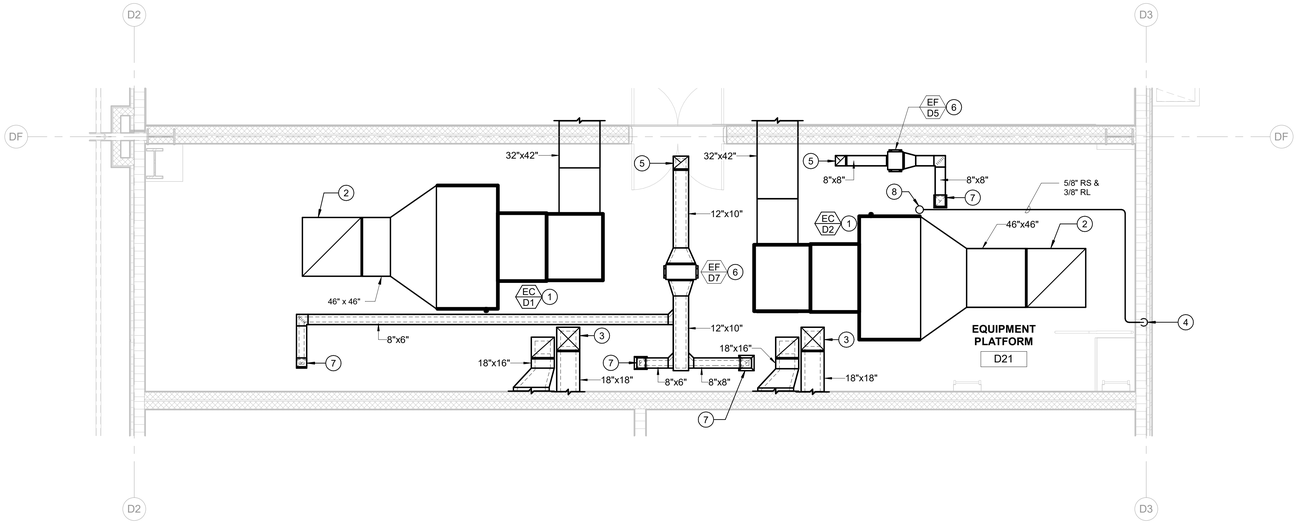

KEYNOTES

1. EVAPORATIVE COOLER ON MECHANICAL PLATFORM. SEE 1/M800 FOR DETAIL.
2. OSA DUCT DOWN FROM INTAKE HOOD ON ROOF, SEE M500.
3. SA & RA DUCTS DOWN FROM PACKAGE UNIT ON ROOF, SEE M500.
4. REFRIGERANT PIPING DOWN TO WALL MOUNTED IDU. SEE M200 FOR CONT.
5. EA DUCT UP TO RELIEF HOOD ON ROOF, SEE M500.
6. IN-LINE FAN SUSPENDED FROM STRUCTURE. SEE 27/M800 FOR DETAIL.
7. EA DUCT DOWN THRU PLATFORM. SEE 1/M200 FOR CONT.
8. REFRIGERANT PIPING UP TO ODU ON ROOF. SEE M500.

GENERAL NOTES

A. SEE DETAIL 24/M800 FOR TYPICAL DUCT SUPPORTS.
B. SEE DETAIL 25/M800 FOR TYPICAL BRANCH DUCT DETAILS.
C. SEE DETAIL 3/M801 FOR TYPICAL REFRIGERANT PIPE SUPPORTS.
D. DUCT SIZES SHOWN ARE INSIDE CLEAR DIMENSIONS. WHERE INTERNAL LINING IS SHOWN OR SPECIFIED, INCREASE FABRICATED DUCT DIMENSIONS TO ACCOMMODATE.

NORTH

MECHANICAL PLATFORM PLAN – BULDING D | 1/4" = 1'-0" | 1

FOR BID ONLY

Teter, LLP expressly reserves its common law copyright and other property rights in these plans. This document, the ideas and designs incorporated herein, as an instrument of professional service, is not to be used in whole or part, for any other project without prior written authorization.

MARK	DATE	DESCRIPTION
	11/1/22	DSA BACKCHECK

TETER, LLP
FRESNO HEADQUARTERS
VISALIA | BAKERSFIELD | MODESTO | SAN LUIS OBISPO
ARCHITECTS ENGINEERS CONNECTED

TULARE CAMPUS CTE
COLLEGE OF THE SEQUOIAS
4999 E. BARDSLEY AVE.
TULARE, CA

DRAWING TITLE
MECHANICAL PLATFORM PLAN - BUILDING D

PROJECT NO.
21-12032

DRAWING
M201

\\tetr-file1\Users\matt.soderstrom_TETR\Documents\12032-M-COS Tulare CTE_matt.soderstrom.rvt

PLOT DATE: 10/30/2022 3:57:32 PM

\\tetr-file1\Users\matt.soderstrom_TETR\Documents\12032-M-COS Tulare CTE_matt.soderstrom.rvt

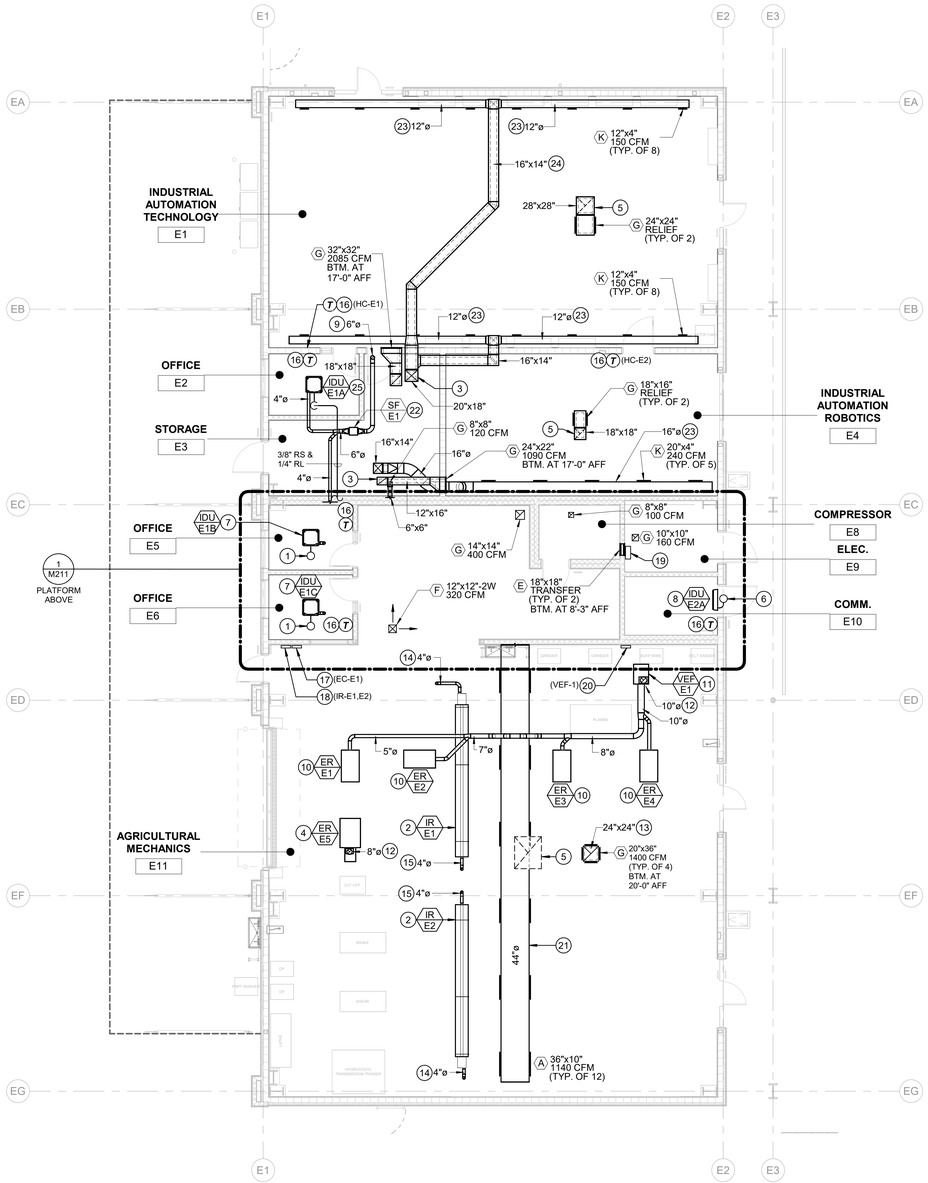

KEYNOTES

1. 3/8" RS & 1/4" RL DOWN FROM ABOVE. SEE M211 FOR CONT.
2. RADIANT TUBE HEATER SUSPENDED FROM STRUCTURE. AT +19'-0" AFF. SEE 15/M800 FOR DETAIL.
3. SA & RA DUCTS DOWN FROM PACKAGE UNIT ON ROOF.
4. VEHICLE EXHAUST HOSE REEL AND FAN SUSPENDED FROM STRUCTURE. SEE 16/M800 FOR DETAIL. BOTTOM AT 19'-0" AFF.
5. RELIEF HOOD ON ROOF. SEE M510.
6. 5/8" RS & 3/8" RL DOWN FROM ABOVE. SEE M211 FOR CONT.
7. CEILING CASSETTE INDOOR FAN COIL. SEE 11/M800 FOR DETAIL.
8. WALL MOUNTED INDOOR FAN COIL. SEE 13&14/M800 FOR DETAIL.
9. OSA DUCT DOWN FROM ROOF. SEE M510 FOR CONTINUATION.
10. VEHICLE EXHAUST HOSE REEL SUSPENDED FROM STRUCTURE. SEE 16/M800 FOR DETAIL. BOTTOM AT 19'-0" AFF.
11. VEHICLE EXHAUST FAN SUSPENDED FROM STRUCTURE. SEE 26/M800 FOR DETAIL.
12. VEHICLE EXHAUST DUCT FROM FAN OUTLET UP THRU ROOF. SEE M510.
13. EA DUCT UP TO EXHAUST FAN ON ROOF. SEE M510.
14. RADIANT HEATER COMBUSTION AIR INTAKE UP THRU ROOF. SEE M510.
15. RADIANT HEATER FLUE UP THRU ROOF. SEE M510.
16. INSTALL THERMOSTAT AT +48" AFF TO TOP OF BOX.
17. INSTALL EVAPORATIVE COOLER CONTROL PANEL AT +48" AFF TO TOP OF PANEL.
18. INSTALL RADIANT HEATER CONTROL PANEL AT +48" AFF TO TOP OF PANEL.
19. BUILDING EMS PANEL.
20. VEHICLE EXHAUST FAN WALL SWITCH MOUNTED ON WALL AT +48" AFF.
21. SUPPLY DUCT SUSPENDED FROM STRUCTURE AT 19'-9" AFF TO CENTER OF DUCT. SEE 23/M800 FOR DETAIL.
22. INLINE FAN SUSPENDED FROM STRUCTURE. SEE 27/M800 FOR DETAIL.
23. SUPPLY DUCT SUSPENDED FROM STRUCTURE AT 12'-6" AFF TO CENTER OF DUCT.
24. ROUTE 16"x14" SA DUCT OVER SUSPENDED CEILING.
25. CEILING CASSETTE INDOOR FAN COIL. SEE 12/M800 FOR DETAIL.

GENERAL NOTES

A. SEE DETAILS 23&24/M800 FOR TYPICAL DUCT SUPPORTS.
B. SEE DETAIL 30/M800 FOR TYPICAL DIFFUSERS.
C. SEE DETAIL 25/M800 FOR TYPICAL BRANCH DUCT DETAILS.
D. SEE DETAIL 3/M801 FOR TYPICAL REFRIGERANT PIPE SUPPORTS.
E. DUCT SIZES SHOWN ARE INSIDE CLEAR DIMENSIONS. WHERE INTERNAL LINING IS SHOWN OR SPECIFIED, INCREASE FABRICATED DUCT DIMENSIONS TO ACCOMMODATE.

NORTH

MECHANICAL FLOOR PLAN - BUILDING E | 1/8" = 1'-0" | 1

PLOT DATE: 10/30/2022 3:57:44 PM

FOR BID ONLY

Teter, LLP expressly reserves its common law copyright and other property rights in these plans. This document, the ideas and designs incorporated herein, as an instrument of professional service, is not to be used in whole or part, for any other project without prior written authorization.

MARK	DATE	DESCRIPTION
	11/1/22	DSA BACKCHECK

TETER, LLP
FRESNO HEADQUARTERS
VISALIA | BAKERSFIELD | MODESTO | SAN LUIS OBISPO
ARCHITECTS ENGINEERS CONSULTANTS

TULARE CAMPUS CTE
COLLEGE OF THE SEQUOIAS
4999 E. BARDSLEY AVE.
TULARE, CA

DRAWING TITLE
MECHANICAL FLOOR PLAN - BUILDING E

PROJECT NO.
21-12032

DRAWING
M210

\\tetr-file1\Users\matt.soderstrom_TETR\Documents\12032-M-COS Tulare CTE_matt.soderstrom.rvt

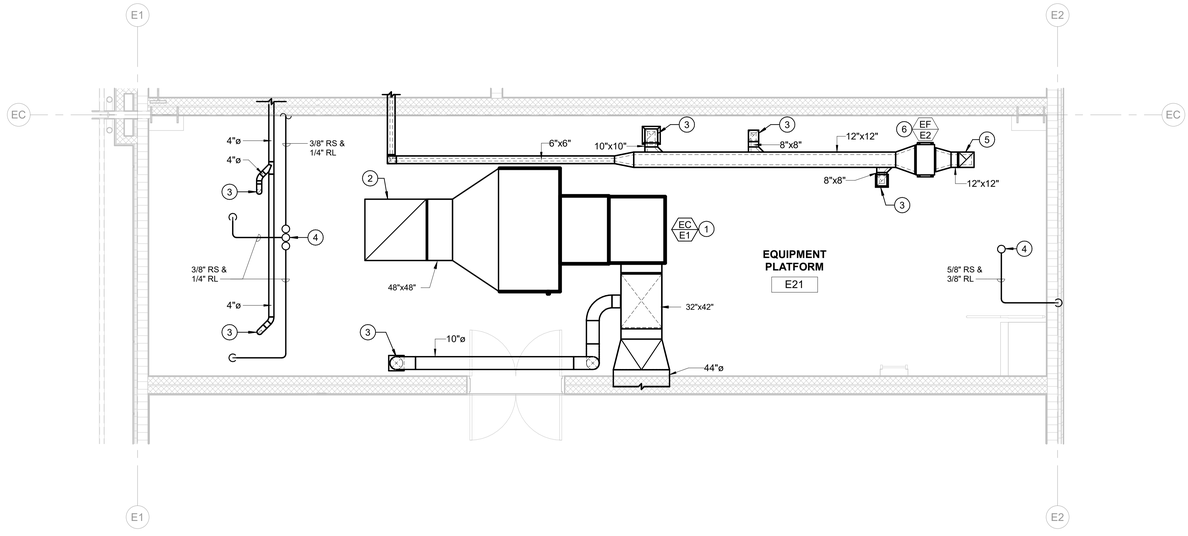

KEYNOTES

1 EVAPORATIVE COOLER ON MECHANICAL PLATFORM. SEE 1/M800 FOR DETAIL.
2 OSA DUCT DOWN FROM INTAKE HOOD ON ROOF, SEE M510.
3 DUCT DOWN THRU PLATFORM. SEE 1/M210 FOR CONT.
4 REFRIGERANT PIPING UP TO ODU ON ROOF. SEE M510.
5 EA DUCT UP TO RELIEF HOOD ON ROOF, SEE M510.
6 IN-LINE FAN SUSPENDED FROM STRUCTURE. SEE 27/M800 FOR DETAIL.

GENERAL NOTES

A. SEE DETAIL 24/M800 FOR TYPICAL DUCT SUPPORTS.
B. SEE DETAIL 25/M800 FOR TYPICAL BRANCH DUCT DETAILS.
C. SEE DETAIL 3/M801 FOR TYPICAL REFRIGERANT PIPE SUPPORTS.
D. DUCT SIZES SHOWN ARE INSIDE CLEAR DIMENSIONS. WHERE INTERNAL LINING IS SHOWN OR SPECIFIED, INCREASE FABRICATED DUCT DIMENSIONS TO ACCOMMODATE.

NORTH

MECHANICAL PLATFORM PLAN – BULDING E | 1/4" = 1'-0" | 1

PLOT DATE: 10/30/2022 3:57:45 PM

FOR BID ONLY

Teter, LLP expressly reserves its common law copyright and other property rights in these plans. This document, the ideas and designs incorporated herein, as an instrument of professional service, is not to be used in whole or part, for any other project without prior written authorization.

MARK	DATE	DESCRIPTION
	11/1/22	DSA BACKCHECK

TETER, LLP
FRESNO HEADQUARTERS
VISALIA | BAKERSFIELD | MODESTO | SAN LUIS OBISPO
ARCHITECTS ENGINEERS CONNECTED

TULARE CAMPUS CTE
COLLEGE OF THE SEQUOIAS
4999 E. BARDSLEY AVE.
TULARE, CA

DRAWING TITLE
MECHANICAL PLATFORM PLAN – BULDING E

PROJECT NO.
21-12032

DRAWING
M211

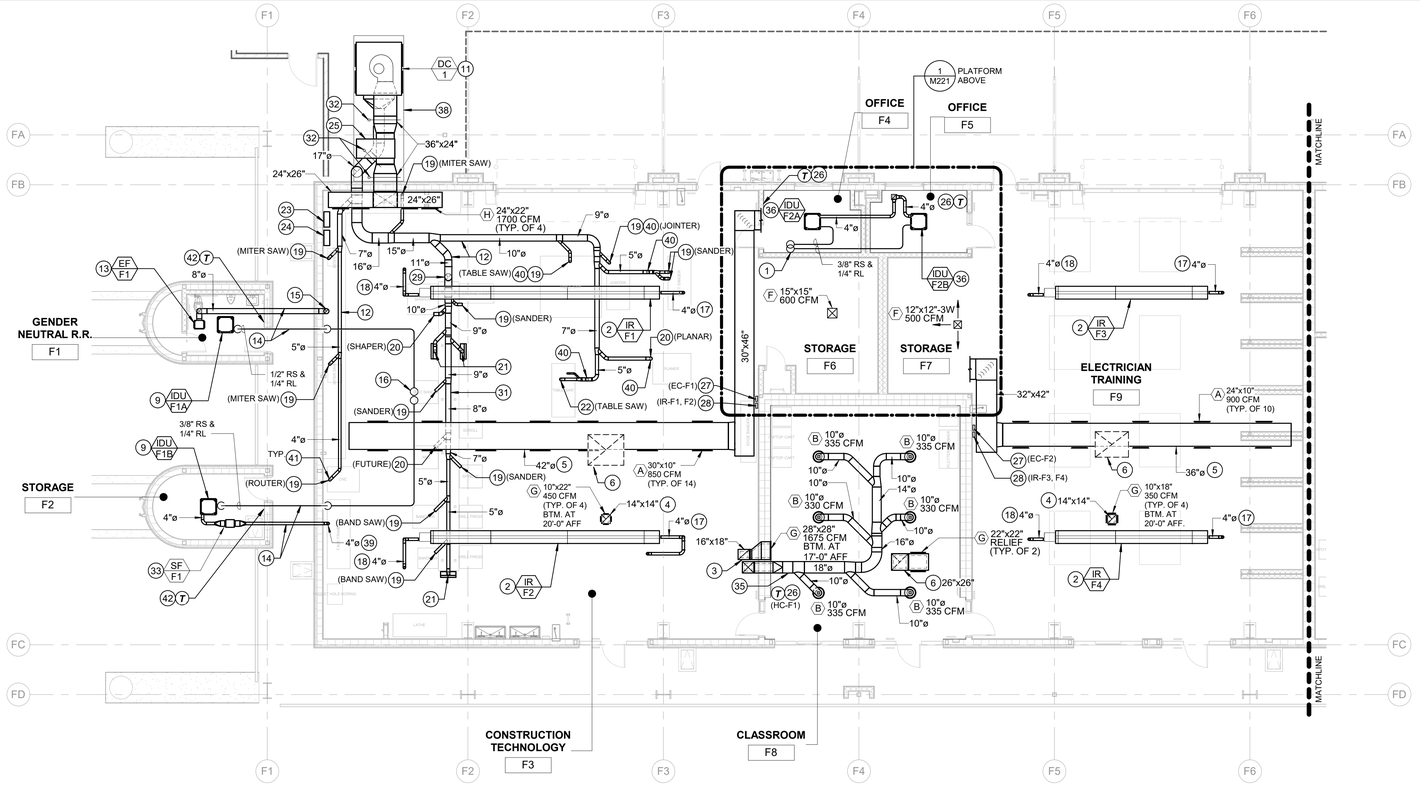

MECHANICAL FLOOR PLAN - BUILDING F — 1/8" = 1'-0" | 1

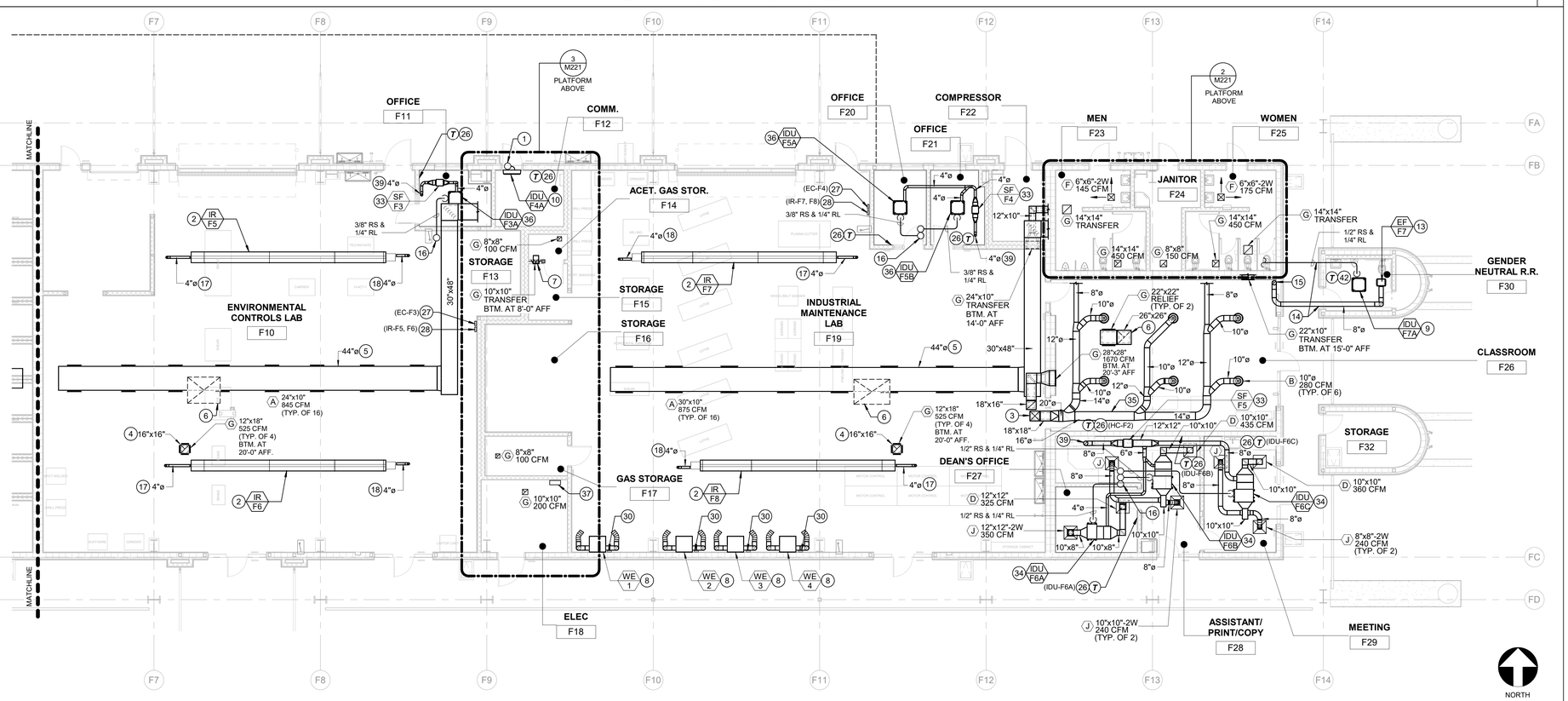

MECHANICAL FLOOR PLAN - BUILDING F — 1/8" = 1'-0" | 2

KEYNOTES

1. 3/8" RS & 1/4" RL DOWN FROM ABOVE. SEE M221 FOR CONT
2. RADIANT TUBE HEATER SUSPENDED FROM STRUCTURE. BTM. AT 19'-0" AFF. SEE 15/M800 FOR DETAIL.
3. 18"x18" SA & 18"x16" RA ACCOUSTIC LINED DUCTS DOWN FROM PACKAGE UNIT ON ROOF, SEE M520.
4. EA DUCT UP TO EXHAUST FAN ON ROOF. SEE M520.
5. SUPPLY DUCT SUSPENDED FROM STRUCTURE AT 18'-0" AFF TO CENTER OF DUCT. SEE 23/M800 FOR DETAIL.
6. RELIEF HOOD ON ROOF, SEE M520.
7. SIDEWALL GRILLE WITH COMBINATION FIRE/SMOKE DAMPER. SEE 21/M800 FOR DETAIL.
8. WELDING EXHAUST SYSTEM MOUNTED ON WALL ABOVE WELDING BOOTH PARTITIONS. SEE 18&19/M800 FOR DETAIL.
9. CEILING CASSETTE INDOOR FAN COIL. SEE 12/M800 FOR DETAIL.
10. WALL MOUNTED INDOOR FAIN COIL. SEE 13&14/M800 FOR DETAIL.
11. DUST COLLECTION SYSTEM MOUNTED ON CONC. PAD. SEE 17/M800 FOR DETAIL.
12. DUST COLLECTION EXHAUST DUCT SUSPENDED FROM STRUCTURE AT 15'-0" AFF TO CENTER OF DUCT.
13. CEILING MOUNTED EXHAUST FAN. SEE 10/M800 FOR DETAIL.
14. ROUTE DUCTWORK AND REFRIGERANT PIPING ABV. CLG. OVER COVERED WALK.
15. EA DUCT UP TO RELIEF VENT ON ROOF. SEE M520.
16. REFRIGERANT PIPING UP TO ODU ON ROOF. SEE M520.
17. RADIANT HEATER FLUE UP THRU ROOF. SEE M520.
18. RADIANT HEATER COMBUSTION AIR INTAKE UP THRU ROOF. SEE M520.
19. 4"Ø DUCT DROP. TERMINATE AT +4'-0" ABV. FLR. WITH BLAST GATE. PROVIDE 6'-0" RIGID FLEX STEEL DUCT AT TERMINATION FOR CONNECTION TO SHOP EQUIPMENT. (350 CFM).
20. 5"Ø DUCT DROP. TERMINATE AT +4'-0" ABV. FLR. WITH BLAST GATE. PROVIDE 6'-0" RIGID FLEX STEEL DUCT AT TERMINATION FOR CONNECTION TO SHOP EQUIPMENT. (550 CFM).
21. 5"Ø DUCT DROP DOWN TO FLOOR SWEEP WITH BLAST GATE. (550 CFM)
22. 2"Ø & 4"Ø DUCT DROPS. TERMINATE AT +4'-0" ABV. FLR. WITH BLAST GATES. PROVIDE 6'-0" RIGID FLEX STEEL DUCT AT TERMINATIONS FOR CONNECTION TO SHOP EQUIPMENT. (200 CFM & 400 CFM).
23. DUST COLLECTOR CONTROL PANEL MOUNTED ON WALL.
24. SPARK DETECTION SYSTEM CONTROL PANEL MOUNTED ON WALL.
25. ABORT GATE MOUNTED IN RECIRCULATION DUCTWORK. INTERLOCK WITH SPARK DETECTION SYSTEM.
26. INSTALL THERMOSTAT AT +48" AFF TO TOP OF BOX.
27. INSTALL EVAPORATIVE COOLER CONTROL PANEL AT +48" AFF TO TOP OF PANEL.
28. INSTALL RADIANT HEATER CONTROL PANEL AT +48" AFF TO TOP OF PANEL.
29. DUST COLLECTION DUCT DOWN AND OFFSET INTO PARTIAL HEIGHT WALL.
30. WELDING EXHAUST STARTER/OVERLOAD SWITCH MOUNTED ON WALL.
31. DUST COLLECTION EXHAUST DUCT ROUTED WITHIN PARTIAL HEIGHT WALL. SEE 10/M801 FOR SUPPORT.
32. DUCT SUPPORT LOCATION FOR OUTDOOR DUST COLLECTOR DUCTWORK. SEE 17/M800 & 2/M801 FOR DETAIL.
33. INLINE FAN SUSPENDED FROM STRUCTURE. SEE 27/M800 FOR DETAIL.
34. DUCTED INDOOR FAN COIL SUSPENDED FROM STRUCTURE. SEE 28/M800 FOR DETAIL.
35. SUPPLY DUCT SUSPENDED FROM STRUCTURE AT 19'-0" AFF TO CENTER OF DUCT. SEE 29/M800 FOR DETAIL.
36. CEILING CASSETTE INDOOR FAN COIL. SEE 11/M800 FOR DETAIL.
37. BUILDING EMS PANEL.
38. 6'-6"x19'-0" HOUSEKEEPING PAD. SEE 5/M801 FOR DETAIL.
39. OSA DUCT DOWN FROM ROOF. SEE M520 FOR CONT.
40. FLOOR SUPPORT FOR DUST COLLECTOR DUCT VERTICAL DROP. SEE 11/M801 FOR DETAIL.
41. WALL SUPPORT FOR DUST COLLECTOR DUCT VERTICAL DROP. SEE 12/M801 FOR DETAIL.
42. INSTALL TEMPERATURE SENSOR AT +48" AFF TO TOP OF BOX.

GENERAL NOTES

A. SEE DETAILS 23,24&29/M800 FOR TYPICAL DUCT SUPPORTS.
B. SEE DETAILS 29&30/M800 FOR TYPICAL DIFFUSERS.
C. SEE DETAIL 25/M800 FOR TYPICAL BRANCH DUCT DETAILS.
D. SEE DETAIL 3/M801 FOR TYPICAL REFRIGERANT PIPE SUPPORTS.
E. DUCT SIZES SHOWN ARE INSIDE CLEAR DIMENSIONS. WHERE INTERNAL LINING IS SHOWN OR SPECIFIED, INCREASE FABRICATED DUCT DIMENSIONS TO ACCOMMODATE.

FOR BID ONLY

Teter, LLP expressly reserves its common law copyright and other property rights in these plans. This document, the ideas and designs incorporated herein, as an instrument of professional service, is not to be used in whole or in part, for any other project without prior written authorization.

MARK	DATE	DESCRIPTION
	11/1/22	DSA BACKCHECK

TETER, LLP
FRESNO HEADQUARTERS
VISALIA | BAKERSFIELD | MODESTO | SAN LUIS OBISPO
ARCHITECTS ENGINEERS CONNECTED

TULARE CAMPUS CTE
COLLEGE OF THE SEQUOIAS
4999 E. BARDSLEY AVE.
TULARE, CA

DRAWING TITLE
MECHANICAL FLOOR PLAN - BUILDING F

PROJECT NO.
21-12032

DRAWING
M220

PLOT DATE: 10/30/2022 3:58:34 PM

\\tetr-file1\Users\matt.soderstrom_TETR\Documents\12032-M-COS Tulare CTE_matt.soderstrom.rvt

\\tetr-file1\Users\matt.soderstrom_TETR\Documents\12032-M-COS Tulare CTE_matt.soderstrom.rvt

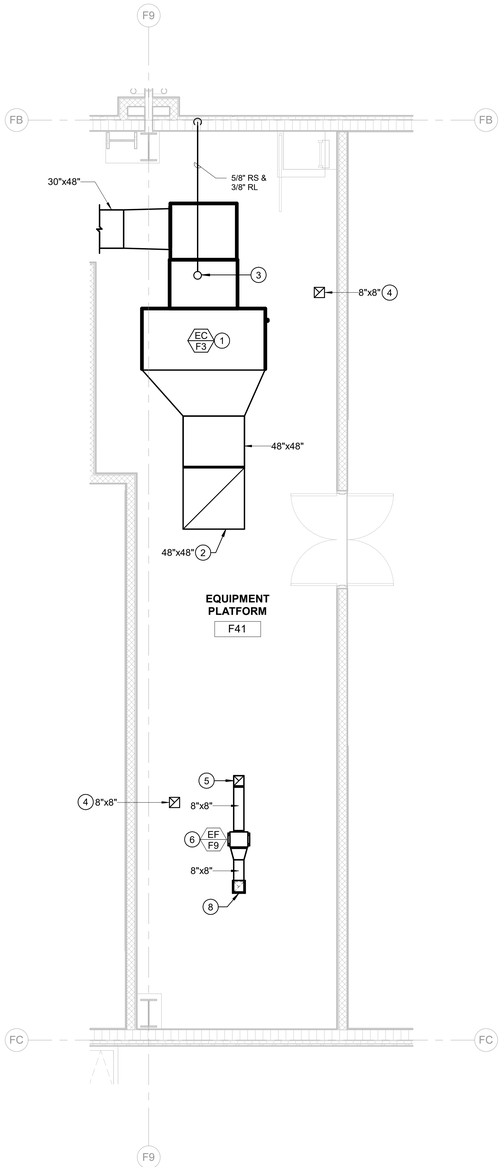

NORTH

MECHANICAL PLATFORM PLAN - BUILDING F - CENTER 1/4" = 1'-0" 3

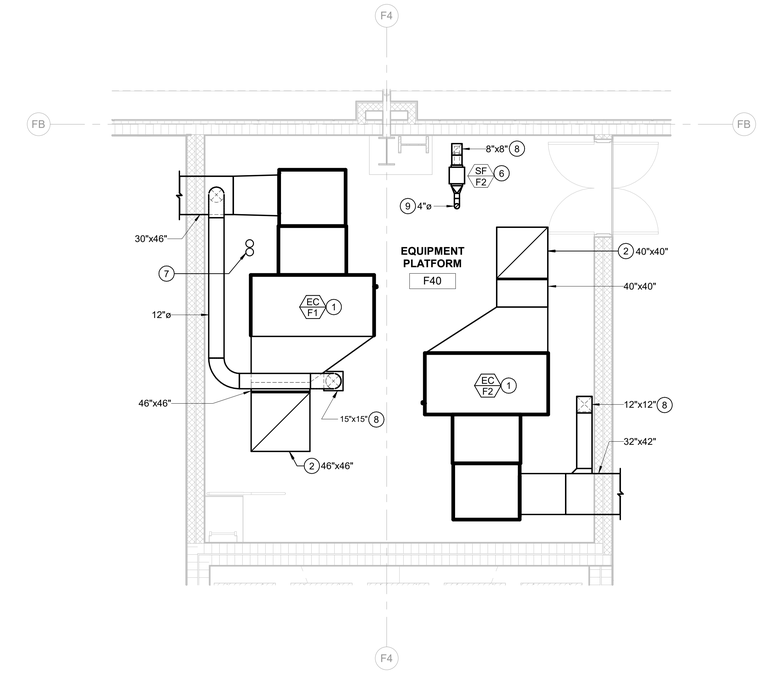

NORTH

MECHANICAL PLATFORM PLAN - BUILDING F - WEST 1/4" = 1'-0" 1

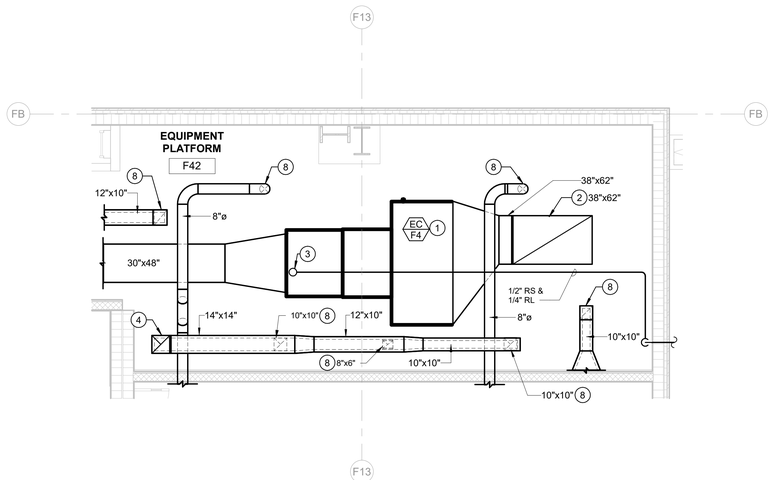

NORTH

MECHANICAL PLATFORM PLAN - BUILDING F - EAST 1/4" = 1'-0" 2

KEYNOTES

1 EVAPORATIVE COOLER ON MECHANICAL PLATFORM. SEE 1/M800 FOR DETAIL.
2 OSA DUCT DOWN FROM INTAKE HOOD ON ROOF, SEE M520 SHEET.
3 REFRIGERANT PIPING UP TO ODU ON ROOF. SEE M520.
4 EA DUCT UP TO EXHAUST FAN ON ROOF. SEE M520.
5 EA DUCT DOWN FROM RELIEF HOOD ON ROOF, SEE M520.
6 IN-LINE FAN SUSPENDED FROM STRUCTURE. SEE 27/M800 FOR DETAIL.
7 REFRIGERANT PIPING UP TO ODU ON ROOF AND DOWN THRU PLATFORM. SEE M520 & M220.
8 DUCT DOWN THRU PLATFORM. SEE M220 FOR CONT.
9 OSA DUCT DOWN FROM ROOF. SEE M520 FOR CONT.

GENERAL NOTES

A. SEE DETAIL 24/M800 FOR TYPICAL DUCT SUPPORTS.
B. SEE DETAIL 25/M800 FOR TYPICAL BRANCH DUCT DETAILS.
C. SEE DETAIL 3/M801 FOR TYPICAL REFRIGERANT PIPE SUPPORTS.
D. DUCT SIZES SHOWN ARE INSIDE CLEAR DIMENSIONS. WHERE INTERNAL LINING IS SHOWN OR SPECIFIED, INCREASE FABRICATED DUCT DIMENSIONS TO ACCOMMODATE.

FOR BID ONLY

Teter, LLP expressly reserves its common law copyright and other property rights in these plans. This document, the ideas and designs incorporated herein, as an instrument of professional service, is not to be used in whole or part, for any other project without prior written authorization.

MARK	DATE	DESCRIPTION
	11/1/22	DSA BACKCHECK

TETER, LLP
FRESNO HEADQUARTERS
VISALIA | BAKERSFIELD | MODESTO | SAN LUIS OBISPO
ARCHITECTS ENGINEERS CONNECTED

TULARE CAMPUS CTE
COLLEGE OF THE SEQUOIAS
4999 E. BARDSLEY AVE.
TULARE, CA

DRAWING TITLE
MECHANICAL PLATFORM PLANS – BULDING F

PROJECT NO.
21-12032

DRAWING
M221

PLOT DATE: 10/30/2022 3:58:37 PM

\\tetr-file1\Users\matt.soderstrom_TETR\Documents\12032-M-COS Tulare CTE_matt.soderstrom.rvt

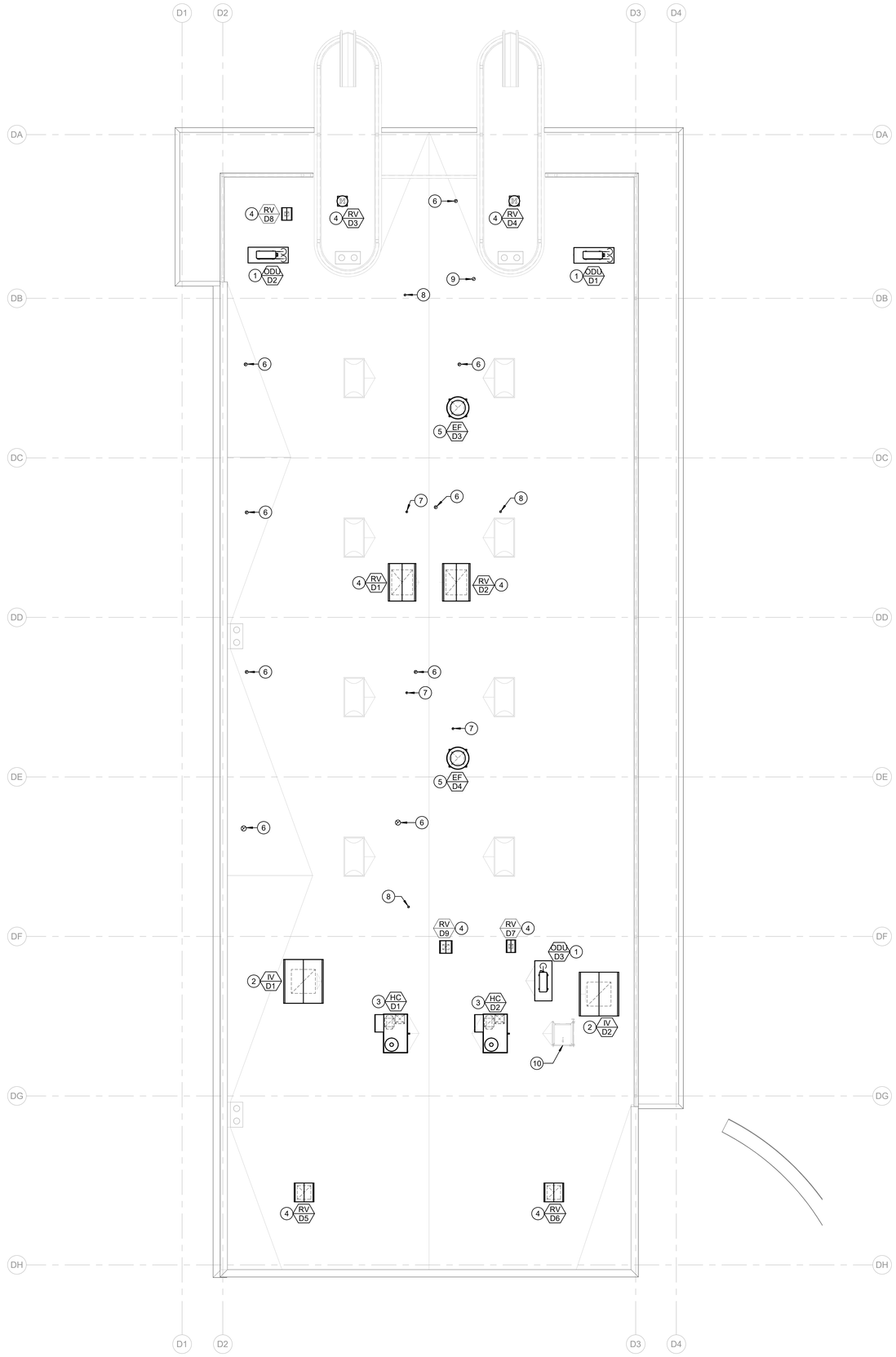

KEYNOTES

1. OUTDOOR CONDENSING UNIT ON EQUIPMENT PLATFORM. SEE 7/M800 FOR DETAIL.
2. OSA INTAKE HOOD ON EQUIPMENT CURB. SEE 4/M800 FOR DETAIL.
3. GAS/ELECTRIC PACKAGE UNIT ON EQUIPMENT CURB. SEE 2/M800 FOR DETAIL.
4. RELIEF HOOD ON EQUIPMENT CURB. SEE 4/M800 FOR DETAIL.
5. EXHAUST FAN ON EQUIPMENT CURB. SEE 5/M800 FOR DETAIL.
6. VEHICLE EXHAUST THRU ROOF. SEE 3/M800 FOR TERMINATION.
7. HEATER FLUE THRU ROOF. SEE 20/M800 FOR TERMINATION.
8. HEATER COMBUSTION AIR INTAKE THRU ROOF. SEE 3/M800 FOR TERMINATION.
9. OSA INTAKE THRU ROOF. SEE 3/M800 FOR TERMINATION.
10. ROOF ACCESS HATCH. SEE ARCH.

NORTH

MECHANICAL ROOF PLAN - BUILDING D

1/8" = 1'-0" | 1

PLOT DATE: 10/30/2022 3:58:39 PM

FOR BID ONLY

Teter, LLP expressly reserves its common law copyright and other property rights in these plans. This document, the ideas and designs incorporated herein, as an instrument of professional service, is not to be used in whole or part, for any other project without prior written authorization.

MARK	DATE	DESCRIPTION
	11/1/22	DSA BACKCHECK

TETER, LLP
ARCHITECTS ENGINEERS CONNECTED
FRESNO HEADQUARTERS
VISALIA | BAKERSFIELD | MODESTO | SAN LUIS OBISPO

TULARE CAMPUS CTE
COLLEGE OF THE SEQUOIAS
4999 E. BARDSLEY AVE.
TULARE, CA

DRAWING TITLE
MECHANICAL ROOF PLAN - BUILDING D

PROJECT NO.
21-12032

DRAWING
M500

\\tetr-file1\Users\matt.soderstrom_TETR\Documents\12032-M-COS Tulare CTE_matt.soderstrom.rvt

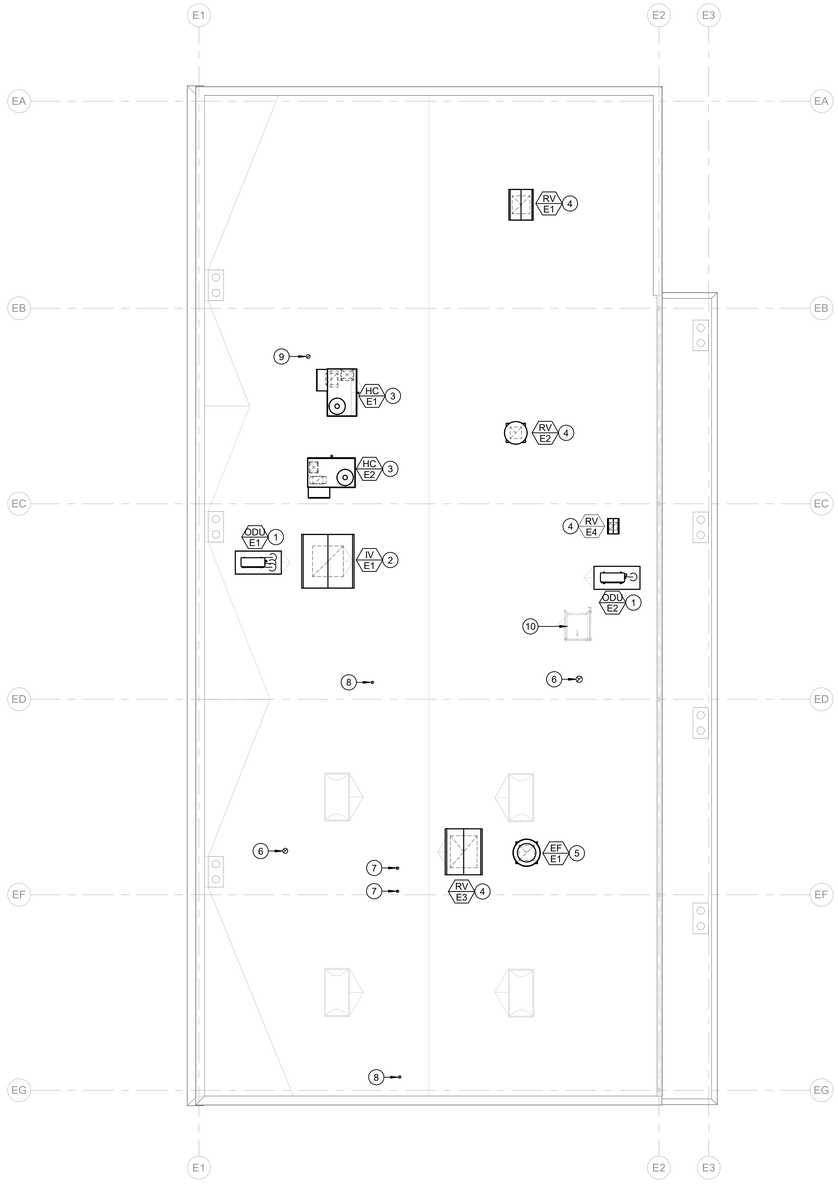

KEYNOTES

1. OUTDOOR CONDENSING UNIT ON EQUIPMENT PLATFORM. SEE 7/M800 FOR DETAIL.
2. OSA INTAKE HOOD ON EQUIPMENT CURB. SEE 4/M800 FOR DETAIL.
3. GAS/ELECTRIC PACKAGE UNIT ON EQUIPMENT CURB. SEE 2/M800 FOR DETAIL.
4. RELIEF HOOD ON EQUIPMENT CURB. SEE 4/M800 FOR DETAIL.
5. EXHAUST FAN ON EQUIPMENT CURB. SEE 5/M800 FOR DETAIL.
6. VEHICLE EXHAUST THRU ROOF. SEE 3/M800 FOR TERMINATION.
7. HEATER FLUE THRU ROOF. SEE 20/M800 FOR TERMINATION.
8. HEATER COMBUSTION AIR INTAKE THRU ROOF. SEE 3/M800 FOR TERMINATION.
9. OSA INTAKE THRU ROOF. SEE 3/M800 FOR TERMINATION.
10. ROOF ACCESS HATCH. SEE ARCH.

NORTH

MECHANICAL ROOF PLAN - BUILDING E | 1/8" = 1'-0" | 1

FOR BID ONLY

Teter, LLP expressly reserves its common law copyright and other property rights in these plans. This document, the ideas and designs incorporated herein, as an instrument of professional service, is not to be used in whole or part, for any other project without prior written authorization.

MARK	DATE	DESCRIPTION
	11/1/22	DSA BACKCHECK

TETER, LLP
FRESNO HEADQUARTERS
VISALIA | BAKERSFIELD | MODESTO | SAN LUIS OBISPO
ARCHITECTS ENGINEERS CONNECTED

TULARE CAMPUS CTE
COLLEGE OF THE SEQUOIAS
4999 E. BARDSLEY AVE.
TULARE, CA

DRAWING TITLE
MECHANICAL ROOF PLAN - BUILDING E

PROJECT NO.
21-12032

DRAWING
M510

PLOT DATE: 10/30/2022 3:58:41 PM

\\tetr-file1\Users\matt.soderstrom_TETR\Documents\12032-M-COS Tulare CTE_matt.soderstrom.rvt

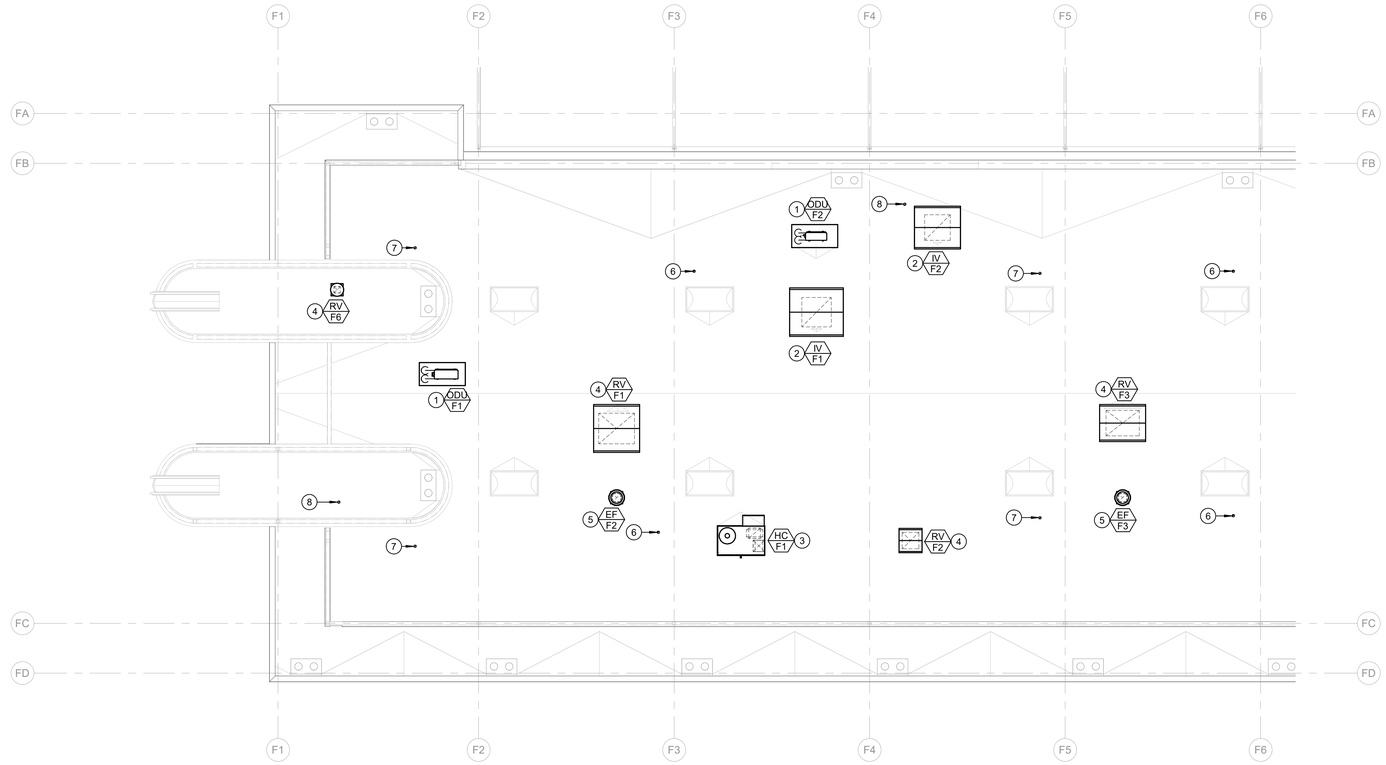

NORTH

MECHANICAL ROOF PLAN - BUILDING F — 1/8" = 1'-0" | 1

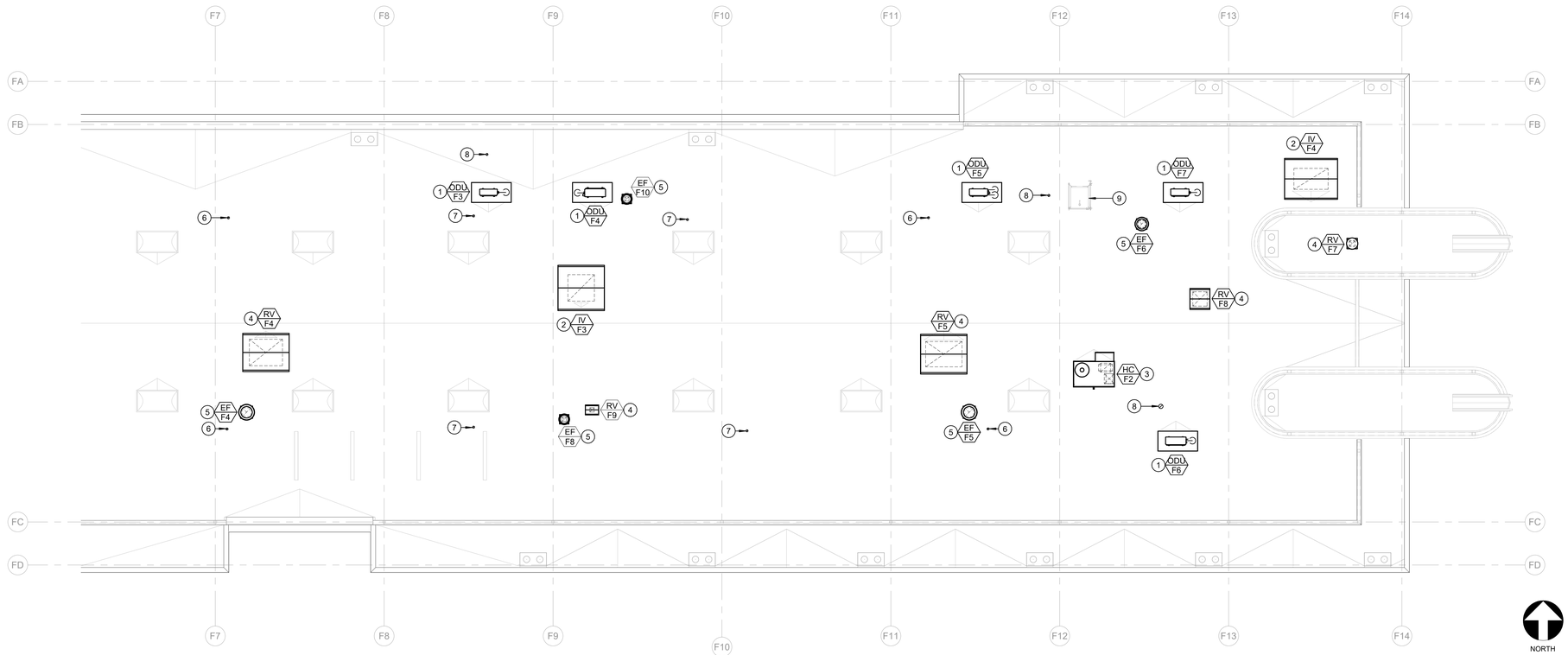

NORTH

MECHANICAL ROOF PLAN - BUILDING F — 1/8" = 1'-0" | 2

KEYNOTES

1. OUTDOOR CONDENSING UNIT ON EQUIPMENT PLATFORM. SEE 7/M800 FOR DETAIL.
2. OSA INTAKE HOOD ON EQUIPMENT CURB. SEE 4/M800 FOR DETAIL.
3. GAS/ELECTRIC PACKAGE UNIT ON EQUIPMENT CURB. SEE 2/M800 FOR DETAIL.
4. RELIEF HOOD ON EQUIPMENT CURB. SEE 4/M800 FOR DETAIL.
5. EXHAUST FAN ON EQUIPMENT CURB. SEE 5/M800 FOR DETAIL.
6. HEATER FLUE THRU ROOF. SEE 20/M800 FOR TERMINATION.
7. HEATER COMBUSTION AIR INTAKE THRU ROOF. SEE 3/M800 FOR TERMINATION.
8. OSA INTAKE THRU ROOF. SEE 3/M800 FOR TERMINATION.
9. ROOF ACCESS HATCH. SEE ARCH.

FOR BID ONLY

Teter, LLP expressly reserves its common law copyright and other property rights in these plans. This document, the ideas and designs incorporated herein, as an instrument of professional service, is not to be used in whole or in part, for any other project without prior written authorization.

MARK	DATE	DESCRIPTION
	11/1/22	DSA BACKCHECK

TETER, LLP
FRESNO HEADQUARTERS
VISALIA | BAKERSFIELD | MODESTO | SAN LUIS OBISPO
ARCHITECTS ENGINEERS CONNECTED

TULARE CAMPUS CTE
COLLEGE OF THE SEQUOIAS
4999 E. BARDSLEY AVE.
TULARE, CA

DRAWING TITLE
MECHANICAL ROOF PLAN - BUILDING F

PROJECT NO.
21-12032

DRAWING
M520

PLOT DATE: 10/30/2022 3:58:45 PM

\\tetr-file1\Users\matt.soderstrom_TETR\Documents\12032-M-COS Tulare CTE_matt.soderstrom.rvt

SEQUENCE OF OPERATIONS

HVAC EMS CONTROLS SCOPE

CONTROLS CONTRACTOR TO PROVIDE COMPLETE ENERGY MANAGEMENT SYSTEM FOR ALL EQUIPMENT SCHEDULED AND PER THE SEQUENCE OF OPERATIONS LISTED ON THIS SHEET. SYSTEM TO INCLUDE, BUT NOT LIMITED TO, BUILDING LEVEL CONTROLLERS, UNITARY CONTROLLERS, START/STOP SCHEDULING, MONITORING OF ALARMS, WIRING, ELECTRICAL POWER AND CONDUIT AS NEEDED FOR A FULL OPERATING SYSTEM. CONTROLS CONTRACTOR SHALL BE RESPONSIBLE FOR INTEGRATION WITH THE DISTRICT'S EXISTING GRAPHICAL USER INTERFACE. COORDINATE WITH ELECTRICAL CONTRACTOR, MECHANICAL CONTRACTOR, AND DIVISION 23 FOR ALL WORK.

CONTROL'S CONTRACTOR SHALL COORDINATE WITH ELECTRICAL CONTRACTOR REGARDING THE CONNECTION OF THE OUTDOOR LIGHTING SYSTEM THROUGH BACNET/IP PROTOCALS. REFER TO ELECTRICAL DRAWINGS FOR LOCATIONS AND QUANTITIES OF EXTERIOR LIGHTING CONTROL TIMECLOCKS AT EACH BUILDING.

HEATING/COOLING PACKAGE UNIT

THE UNIT SHALL RUN PER THE SYSTEM OPERATION SCHEDULE THROUGH THE DDC/EMS AND PER THE UNIT'S THERMOSTAT OVERRIDE (ON/OFF). OCCUPANTS MUST BE ABLE TO OVERRIDE THE UNIT ON AND OFF (FOR 3 HOURS) REGARDLESS OF SCHEDULED OCCUPANCY. ROOM TEMPERATURE SENSOR SHALL BE WALL MOUNTED. THE UNIT SETPOINT SHALL BE ADJUSTABLE +/- 3F (ADJ.) FROM A SWITCH LOCATED ON THE TEMPERATURE SENSOR. UNIT FAN SHALL RUN CONTINUOUSLY ON START BY THE DDC/EMS REGARDLESS OF HEAT/COOL CALL. IF THE FAN IS COMMANDED ON, AND THE STATUS FAILS TO PROVE, THE DDC/EMS SHALL SEND A FAN FAILURE ALARM TO THE DISTRICT EMS SERVER. THE UNIT CONTROLLER SHALL MONITOR ROOM TEMPERATURE AND ROOM SETPOINT AND WITH A PROPORTIONAL INTEGRAL CONTROL ALGORITHM DETERMINE IF ACTIVE COOLING CAPACITY IS REQUIRED. ON CALL FOR COOLING, THE UNIT CONTROLLER SHALL BEGIN TO STAGE COMPRESSORS.

DURING HEATING OPERATION, THE UNIT CONTROLLER WILL MONITOR ROOM TEMPERATURE AND ROOM SETPOINT AND WITH A PROPORTIONAL INTEGRAL CONTROL ALGORITHM DETERMINE ACTIVE HEATING CAPACITY IS REQUIRED. ON CALL FOR HEATING, THE UNIT CONTROLLER SHALL BEGIN TO STAGE HEATING. THE DDC/EMS SHALL MONITOR THE UNIT'S STATUS WITH A SUPPLY AIR TEMPERATURE SENSOR. UNITS AS SCHEDULED SHALL HAVE A SMOKE DETECTOR IN THE MAIN SUPPLY DUCT WHICH SHALL SHUT THE UNIT OFF ON ALARM AND SIGNAL THE FIRE ALARM SYSTEM. (DIV. 28)

THERMOSTAT (SPACE SENSOR) CONTROL AND INITIAL SETTINGS SHALL BE AS FOLLOWS: OCCUPIED COOL SET POINT OF 75F WITH ADJUSTABLE PLUS OR MINUS 3F AT THE THERMOSTAT. OCCUPIED HEAT SET POINT OF 70F WITH ADJUSTABLE PLUS OR MINUS 3F AT THE THERMOSTAT. UNOCCUPIED COOL SETPOINT SHALL BE 95F NOT ADJUSTABLE AT THE THERMOSTAT. UNOCCUPIED HEAT SET POINT SHALL BE 45F NOT ADJUSTABLE AT THE THERMOSTAT. THE UNIT CAN BE TURNED OFF AT THE STAT WHEN OCCUPIED FOR 1-3 HOURS (ADJ.). THE UNIT CAN BE TURNED ON AT THE STAT WHEN UNOCCUPIED FOR 1-3 HOURS (ADJ.). NO OTHER HVAC EQUIPMENT FUNCTIONS SHOULD BE ADJUSTABLE AT THE THERMOSTAT.

AIR FILTERS SHALL BE MONITORED WITH A DIFFERENTIAL PRESSURE TRANSDUCER ACROSS EACH FILTER BANK WHICH SHALL REPORT THE DIFFERENTIAL PRESSURE IN INCHES W.C. TO THE DDC/EMS.

ON ALL PACKAGE UNITS, THE ECONOMIZER WILL BE CONTROLLED BY THE UNIT'S DDC CONROLLER. THE CONTROL LOGIC WILL BE CONSISTENT WITH THE OUTSIDE AIR DAMPER AND HEATING AND COOLING SEQUENCES OUTLINED IN THIS SPECIFICATION. THE FIRST SOURCE OF COOLING AS ROOM TEMPERATURE RISES ABOVE COOLING SETPOINT IS THE OUTSIDE AIR. WHEN THE OUTSIDE AIR IS BELOW 55F (ADJ.), THE OUTSIDE AIR AND RETURN AIR DAMPERS SHALL MODULATE TO MAINTAIN SETPOINT. WHEN OUTSIDE AIR TEMPERATURE IS BETWEEN 55F (ADJ.) AND THE ROOM COOLING SETPOINT, THE OUTSIDE AIR DAMPER SHALL OPEN FULLY. THE RETURN DAMPER SHALL CLOSE FULLY, AND THE UNIT'S COOLING WILL CYCLE TO MAINTAIN SETPOINT. WHEN THE OUTSIDE AIR IS ABOVE ROOM COOLING SETPOINT, THE OUTSIDE AIR DAMPER CLOSES TO MINIMUM POSITION, THE RETURN DAMPER OPENS TO MINIMUM OUTSIDE AIR OPERATION POSITION, AND THE UNIT'S COOLING WILL CYCLE TO MAINTAIN SETPOINT.

THE CONTROL CONTRACTOR SHALL SET THE OUTSIDE AIR DAMPER POSITION AIRFLOW SETPOINTS PER DESIGN AND AIR BALANCE. DAMPER SETPOINTS FOR UNITS WITH CO2 DCV SHALL BE AS FOLLOWS. A WALL MOUNTED CO2 SENSOR SHALL CONTROL THE UNIT'S OUTSIDE AIR DAMPER WHEN THE SYSTEM IS IN THE HEATING OR COOLING MODES TO RESET THE MINIMUM OUTSIDE AIRFLOW. THE CO2 SENSOR SETPOINTS AND THE OUTSIDE AIR DAMPER SETPOINTS SHALL BE DEVELOPED IN COORDINATION WITH THE BALANCE CONTRACTOR AND AS NOTED ABOVE. THE CONTROL CONTRACTOR SHALL DETERMINE THE BASE AMBIENT CO2 CONCENTRATIONS LEVEL AFTER THE AIR HANDLER SYSTEM HAS BEEN BALANCED AND THE BUILDING IS UNOCCUPIED. THE UPPER AND LOWER CO2 CONCENTRATION SETPOINTS SHALL BE DEVELOPED AS FOLLOWS. LOWER CO2 CONCENTRATION SETPOINT SHALL BE 200 PPM ABOVE AMBIENT. UPPER CO2 CONCENTRATION SETPOINT SHALL BE 600 PPM ABOVE AMBIENT. THE SENSOR SHALL MONITOR THE CO2 CONCENTRATION WHILE THE UNIT IS ON. ON SYSTEM STARTUP, THE OUTSIDE AIR DAMPER SHALL OPEN TO THE DESIGN MINIMUM DAMPER POSITION SETPOINT. IF THE CO2 CONCENTRATION IS ABOVE THE UPPER CO2 SETPOINT, THE DAMPER SHALL MODULATE OPEN. THE DAMPER SHALL NOT OPEN MORE THAN THE DESIGN MINIMUM POSITION SETPOINT IF THE AIR HANDLER IS NOT IN THE ECONOMIZER MODE. IF THE CO2 CONCENTRATION IS BELOW THE LOWER CO2 SETPOINT, THE DAMPER SHALL MODULATE TO DCV MINIMUM SETTING. THE HEATING/ COOLING CALLS WILL NOT BE SUSPENDED WHEN OUTSIDE AIR DAMPERS ARE OPENED BY HIGH CO2 CONCENTRATIONS.

SPLIT SYSTEM HEAT PUMPS

THE UNIT SHALL RUN PER THE SYSTEM OPERATION SCHEDULE AND PER THE UNIT THERMOSTAT'S OVERRIDE (ON/OFF). OCCUPANTS MUST BE ABLE TO OVERRIDE THE UNIT ON AND OFF (FOR 3 HOURS) REGARDLESS OF SCHEDULED OCCUPANCY. ROOM TEMPERATURE SENSORS SHALL BE WALL MOUNTED. THE UNIT SET POINT SHALL BE ADJUSTABLE +/- 3F (ADJ.) FROM A SWITCH LOCATED ON THE TEMPERATURE SENSOR. THERMOSTAT SHALL CONTROL THE HEATING/COOLING UNIT TO MAINTAIN SET POINTS.

SPLIT SYSTEM HEAT PUMPS (IDU-D1A,D1B,F1A,F1B,F7A)

THE UNIT SHALL RUN PER THE SYSTEM OPERATION SCHEDULE. THE UNIT SET POINT SHALL NOT BE ADJUSTABLE FROM THE TEMPERATURE SENSOR. TEMPERATURE SENSOR SHALL CONTROL THE HEATING/COOLING UNIT TO MAINTAIN SET POINTS.

EXHAUST FANS (EF-D1,D2,D5,D6,D7,E3,F1,F6,F7,F9)

THE UNIT SHALL RUN PER THE SYSTEM OPERATION SCHEDULE THROUGH THE DDC/EMS. IF THE EXHAUST FAN IS COMMANDED ON, AND THE STATUS FAILS TO PROVE, THE DDC/EMS SHALL SEND A FAN FAILURE ALARM TO THE DISTRICT EMS SERVER.

EVAPORATIVE COOLER

THE UNIT SHALL RUN PER THE SYSTEM OPERATION SCHEDULE THROUGH THE DDC/EMS AND PER THE UNIT'S CONTROL SWITCH. IF THE EVAPORATIVE COOLER IS SCHEDULED OFF AND THE OCCUPANT OVERRIDES THE UNIT TO RUN BASED ON THE CONTROL SWITCH, THE UNIT SHALL TURN ON. AN ALERT (NON-ALARM) SHALL BE SENT TO THE DISTRICT EMS SERVER WITH A TIME STAMP. WHEN THE ZONE IS SCHEDULED OCCUPIED, THE FAN SHALL RUN AT LOW SPEED. IF THE SUPPLY FAN IS COMMANDED ON, AND THE STATUS FAILS TO PROVE, THE DDC/EMS SHALL SEND A FAN FAILURE ALARM TO THE DISTRICT EMS SERVER. WHEN THE ZONE TEMPERATURE IS GREATER THAN 75F (ADJ.) THE PUMP SHALL OPERATE AND THE FAN SHALL RUN AT HIGH SPEED. THE PUMP SHALL ONLY OPERATE WHEN THE FAN IS RUNNING AT HIGH SPEED. THE EVAPORATIVE COOLER SHALL HAVE AN OPTIMUM START/STOP COOL DOWN MODE. IF THE ZONE TEMPERATURE IS GREATER THAN THE OUTSIDE AIR TEMPERATURE AND THE OUTSIDE AIR TEMPERATURE IS LESS THAN THE COOLING SETPOINT, THE DDC/EMS SUPERVISORY CONTROLLER SHALL DETERMINE THE OPTIMUM START TIME FOR THE UNIT TO COOL THE SPACE TO 2F DEGREES ABOVE THE HEATING SETPOINT. IF A COOL DOWN MODE IS NOT AVAILABLE, THE UNIT SHALL START 15 MINUTES BEFORE THE SPACE IS EXPECTED TO BE OCCUPIED.

INFRARED HEATER

THE INFRARED HEATERS SHALL BE INTEGRATED INTO THE EVAPORATIVE COOLER SYSTEM. WHEN THE EVAPORATIVE COOLER ZONE IS SCHEDULED OFF AND THE OCCUPANT OVERRIDES THE HEATERS TO RUN BASED ON THE CONTROL SWITH, THE HEATERS SHALL BE TURNED ON. AN ALERT (NON-ALARM) SHALL BE SENT TO THE DISTRICT EMS SERVER WITH A TIME STAMP. WHEN THE EVAPORATIVE COOLER ZONE IS SCHEDULED OCCUPIED AND THE ZONE TEMPERATURE IS BELOW THE HEATING SETPOINT 65F DEGREES (ADJ.), THE INFRARED HEATERS SHALL BE ENABLED. THE CONTROLLER SHALL MODULATE THE HEATING SIGNAL BASED ON A PROPORTIONAL-INTEGRAL LOOP. WHEN THE ZONE TEMPERATURE RISES ABOVE THE HEATING SETPOINT, THE INFRARED HEATERS SHALL BE DISABLED. THE HEATING CONTROL LOOP SHALL HAVE A DEADBAND OF 2F. IF THE EVAPORATIVE COOLER SWITCH IS IN COOL MODE, THE INFRARED HEATERS SHALL BE DISABLED. WHEN THE SYSTEM IS UNOCCUPIED, THE INFRARED HEATERS SHALL MAINTAIN THE UNOCCUPIED HEATING SETPOINT OF 40F (ADJ.)

EXHAUST FAN (EF-D3,D4,E1,E2,F2,F3,F4,F5)

THE EXHAUST FAN SHALL BE INTERLOCKED TO RUN WITH THE EVAPORATIVE COOLER. IF THE EXHAUST FAN IS COMMANDED ON, AND THE STATUS FAILS TO PROVE, THE DDC/EMS SHALL SEND A FAN FAILURE ALARM TO THE DISTRICT EMS SERVER.

RELIEF VENT CONTROL DAMPERS

THE CONTROL DAMPER SHALL BE COMMANDED OPEN WHEN THE EVAPORATIVE COOLER SERVING THE SPACE IS OPERATING OR WHEN A VEHICLE EXHUAST FAN SERVING THE SPACE IS OPERATING. OTHERWISE, THE CONTROL DAMPER SHALL BE NORMALLY CLOSED.

PLOT DATE: 10/30/2022 3:58:45 PM

FOR BID ONLY

Teter, LLP expressly reserves its common law copyright and other property rights in these plans. This document, the ideas and designs incorporated herein, as an instrument of professional service, is not to be used in whole or in part, for any other project without prior written authorization.

MARK	DATE	DESCRIPTION
	11/1/22	DSA BACKCHECK

TETER, LLP
FRESNO HEADQUARTERS
VISALIA | BAKERSFIELD | MODESTO | SAN LUIS OBISPO
ARCHITECTS ENGINEERS CONNECTED

TULARE CAMPUS CTE
COLLEGE OF THE SEQUOIAS
4999 E. BARDSLEY AVE.
TULARE, CA

DRAWING TITLE
EMS SEQUENCE OF OPERATIONS

PROJECT NO.
21-12032

DRAWING
M700

\\tetr-file1\Users\matt.soderstrom_TETR\Documents\120032-M-COS Tulare CTE_matt.soderstrom.rvt

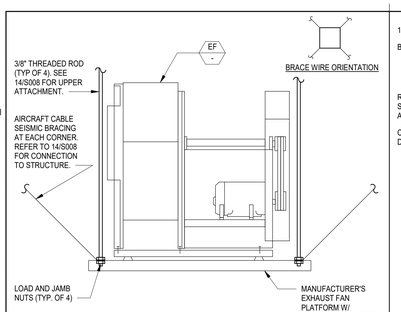

SUSPENDED VEHICLE EXHAUST FAN — N.T.S. — 26

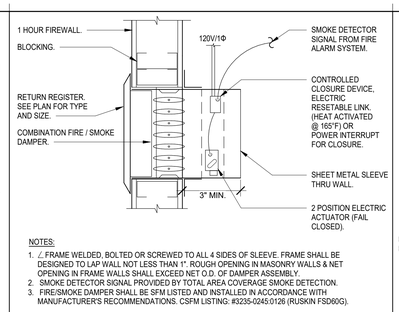

FIRE/SMOKE DAMPER - SIDEWALL GRILLE — N.T.S. — 21

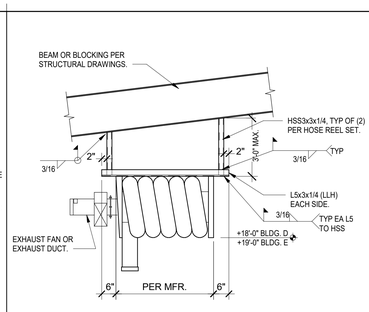

TAILPIPE HOSE REEL — N.T.S. — 16

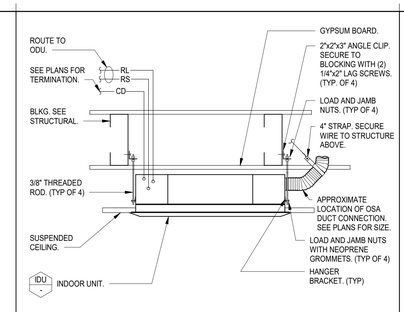

INDOOR UNIT - CEILING CASSETTE — N.T.S. — 11

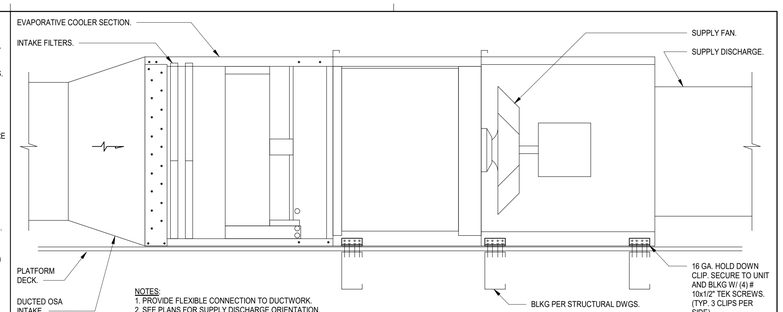

EVAPORATIVE COOLER ON MECHANICAL PLATFORM — N.T.S. — 1

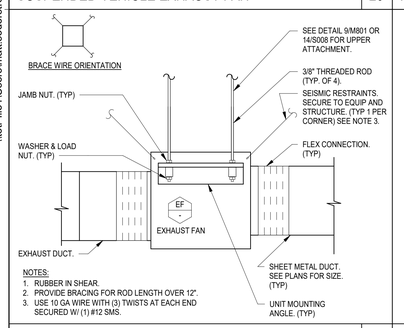

IN-LINE EXHAUST FAN — N.T.S. — 27

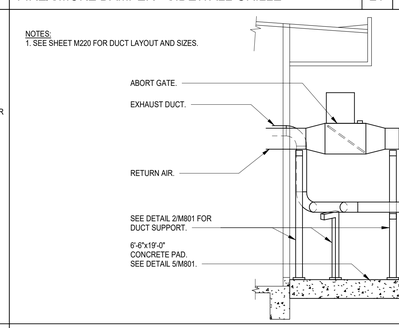

DUST COLLECTOR — N.T.S. — 17

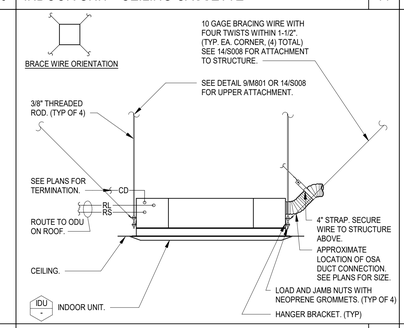

INDOOR UNIT - CEILING CASSETTE — N.T.S. — 12

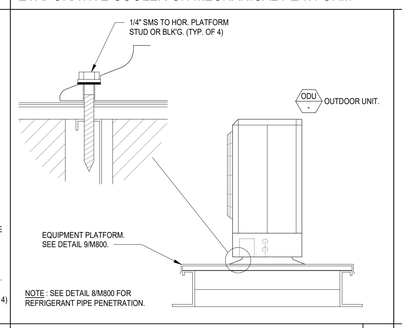

ODU ON EQUIPMENT PLATFORM — N.T.S. — 7

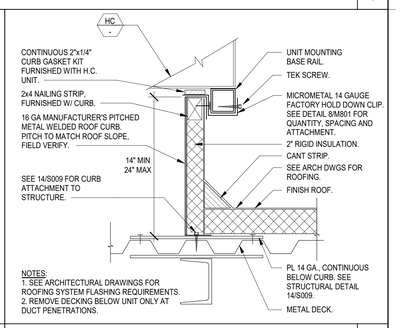

PACKAGE UNIT ON EQUIPMENT CURB — N.T.S. — 2

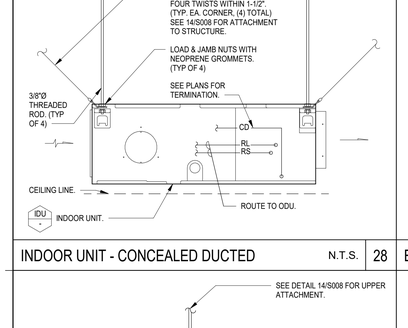

INDOOR UNIT - CONCEALED DUCTED — N.T.S. — 28

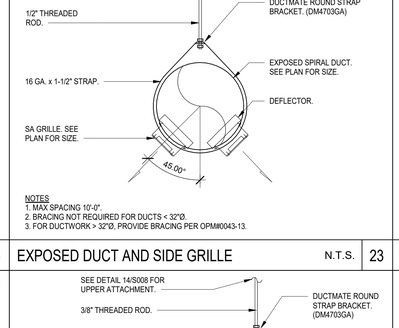

EXPOSED DUCT AND SIDE GRILLE — N.T.S. — 23

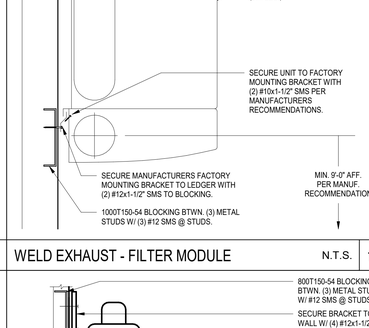

WELD EXHAUST - FILTER MODULE — N.T.S. — 18

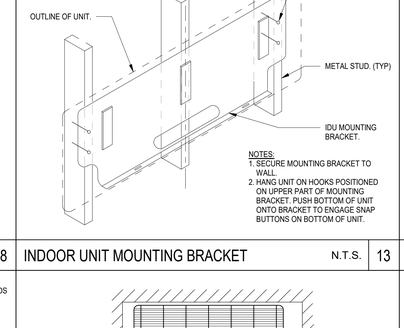

INDOOR UNIT MOUNTING BRACKET — N.T.S. — 13

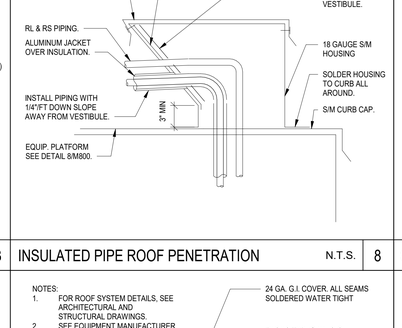

INSULATED PIPE ROOF PENETRATION — N.T.S. — 8

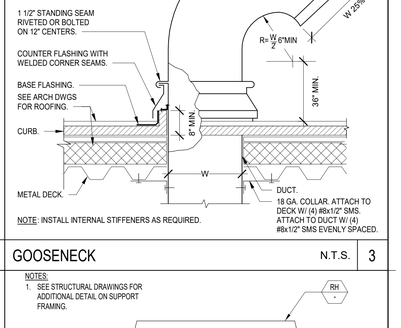

GOOSENECK — N.T.S. — 3

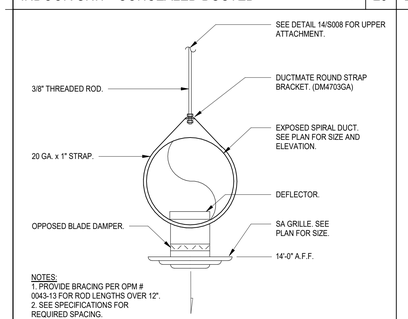

DUCT MOUNTED GRILLE — N.T.S. — 29

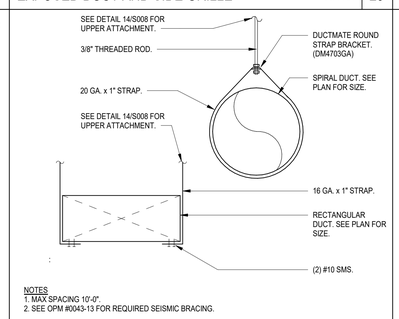

DUCT SUPPORT — N.T.S. — 24

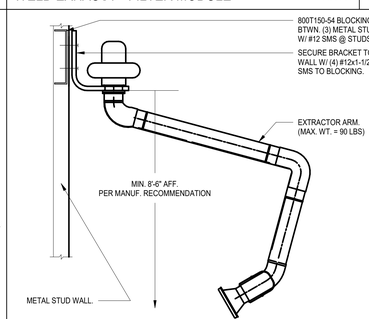

WELD EXHAUST - EXTRACTOR ARM — N.T.S. — 19

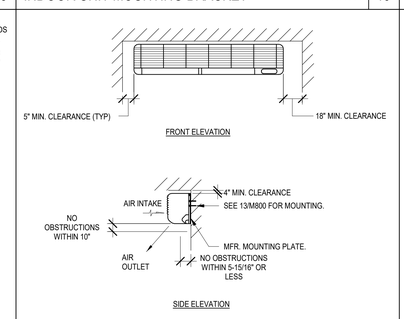

WALL MOUNTED INDOOR UNIT CLEARANCE — N.T.S. — 14

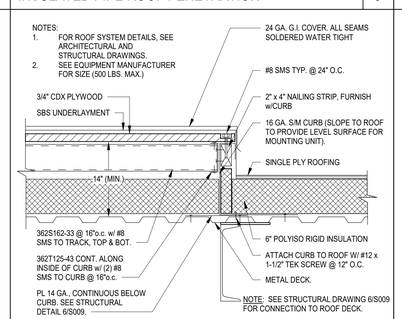

EQUIPMENT PLATFORM — N.T.S. — 9

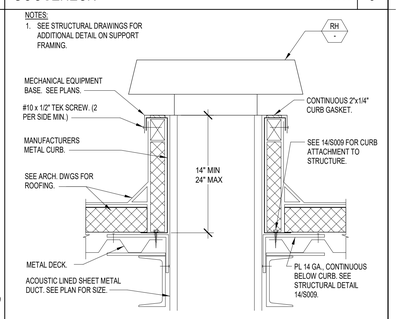

RELIEF / OSA HOOD ON EQUIPMENT CURB — N.T.S. — 4

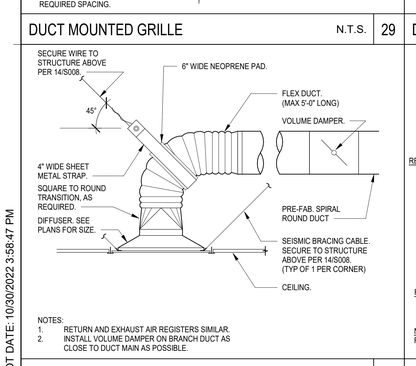

TYPICAL CEILING GRILLE — N.T.S. — 30

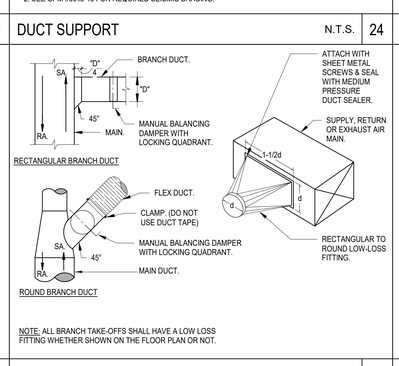

TYPICAL BRANCH DUCT DETAILS — N.T.S. — 25

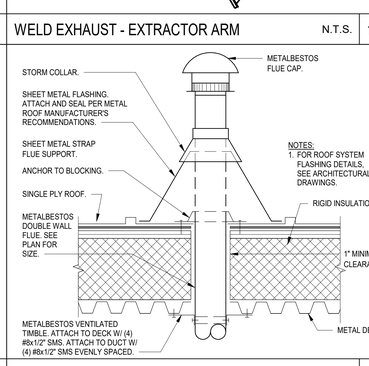

RADIANT HEATER FLUE — N.T.S. — 20

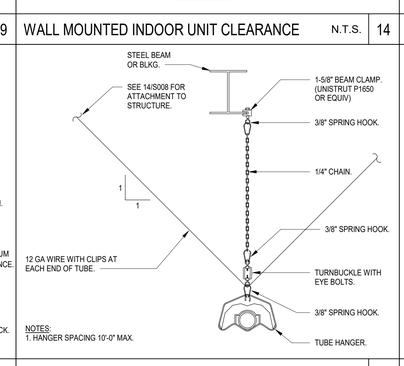

RADIANT HEATER — N.T.S. — 15

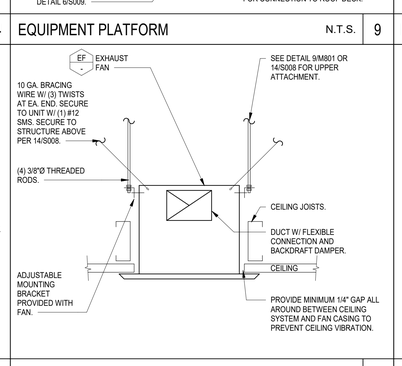

CEILING MOUNTED EXHAUST FAN — N.T.S. — 10

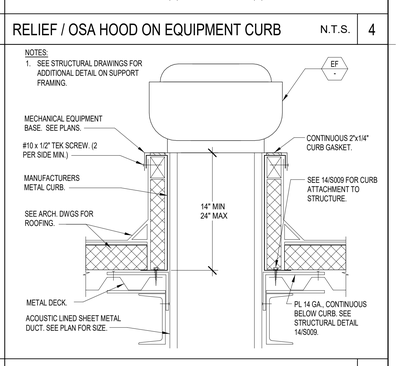

EXHAUST FAN ON EQUIPMENT CURB — N.T.S. — 5

PLOT DATE: 10/30/2022 3:58:47 PM

FOR BID ONLY

Teter, LLP expressly reserves its common law copyright and other property rights in these plans. This document, the ideas and designs incorporated herein, as an instrument of professional service, is not to be used in whole or in part, for any other project without prior written authorization.

MARK	DATE	DESCRIPTION
	11/1/22	DSA BACKCHECK

TETER, LLP
ARCHITECTS ENGINEERS CONSULTANTS
FRESNO HEADQUARTERS
VISALIA | BAKERSFIELD | MODESTO | SAN LUIS OBISPO
TETER

TULARE CAMPUS CTE
COLLEGE OF THE SEQUOIAS
4999 E. BARDSLEY AVE.
TULARE, CA

DRAWING TITLE
MECHANICAL DETAILS

PROJECT NO.
21-12032

DRAWING
M800

\\tetr-file1\Users\matt.soderstrom_TETR\Documents\12032-M-COS Tulare CTE_matt.soderstrom.rvt

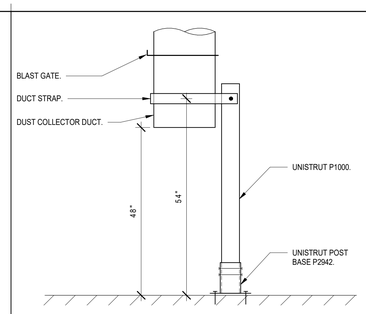

DUST COLLECTOR DUCT FLOOR SUPPORT N.T.S. 11

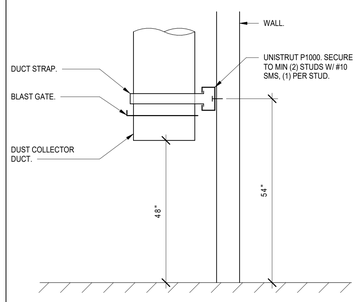

DUST COLLECTOR DUCT WALL SUPPORT N.T.S. 12

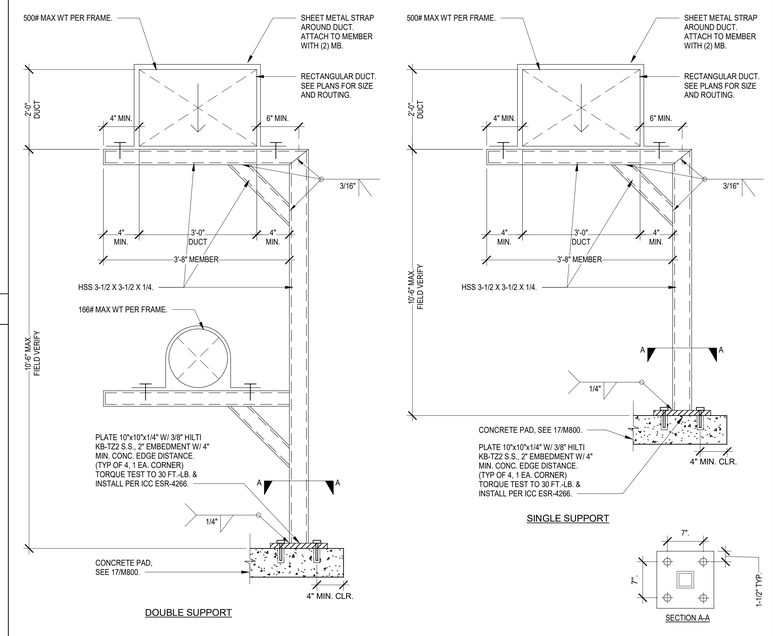

DUCT SUPPORT N.T.S. 2

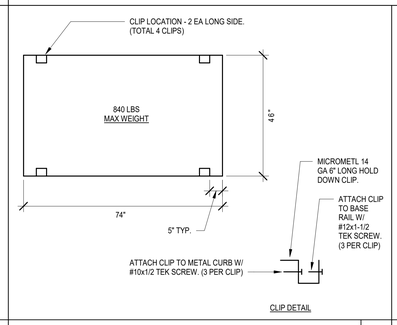

PLAN VIEW OF HC UNITS N.T.S. 8

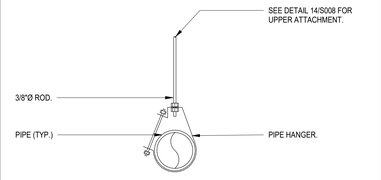

PIPE SUPPORT N.T.S. 3

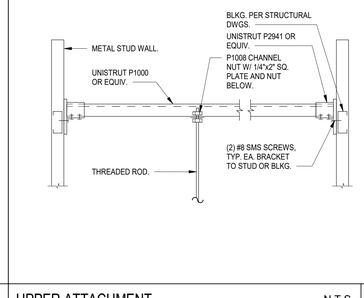

UPPER ATTACHMENT N.T.S. 9

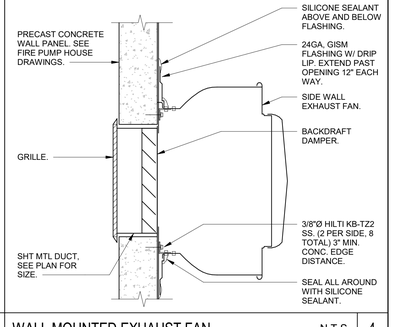

WALL MOUNTED EXHAUST FAN N.T.S. 4

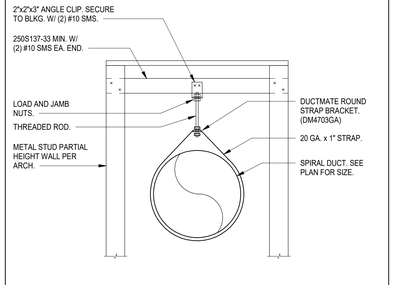

DUCT IN PARTIAL HEIGHT WALL N.T.S. 10

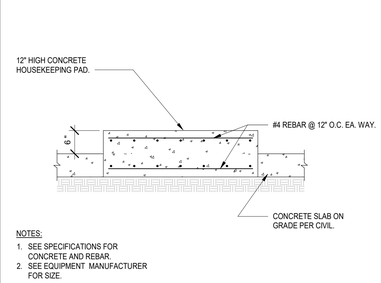

HOUSEKEEPING PAD N.T.S. 5

PLOT DATE: 10/30/2022 3:58:48 PM

FOR BID ONLY

Teter, LLP expressly reserves its common law copyright and other property rights in these plans. This document, the ideas and designs incorporated herein, as an instrument of professional service, is not to be used in whole or in part, for any other project without prior written authorization.

MARK	DATE	DESCRIPTION
	11/1/22	DSA BACKCHECK

TETER, LLP
FRESNO HEADQUARTERS
VISALIA | BAKERSFIELD | MODESTO | SAN LUIS OBISPO
ARCHITECTS ENGINEERS CONNECTED

TETER

TULARE CAMPUS CTE
COLLEGE OF THE SEQUOIAS
4999 E. BARDSLEY AVE.
TULARE, CA

DRAWING TITLE
MECHANICAL DETAILS

PROJECT NO.
21-12032

DRAWING
M801

\\tet-file1\Users\matt.soderstrom_TETR\Documents\12032-M-COS Tulare CTE_matt.soderstrom.rvt

BUILDING ENERGY ANALYSIS REPORT

PROJECT:

COS TULARE CTE
4999 E BARDSLEY AVE
TULARE, CA

Project Designer:

,

Report Prepared by:

Teter Architects & Engineers

,

Job Number:

12032

Date:

6/16/2022

The EnergyPro computer program has been used to perform the calculations summarized in this compliance report. This program has approval and is authorized by the California Energy Commission for use with both the Residential and Nonresidential 2019 Building Energy Efficiency Standards.

This program developed by EnergySoft Software – www.energysoft.com.

A. GENERAL INFORMATION

1	Project Location (city)	TULARE	8	Standards Version	Compliance2019
2	CA Zip Code		9	Compliance Software (version)	EnergyPro 8.3
3	Climate Zone	13	10	Weather File	VISALIA_723896_CZ2010.epw
4	Total Conditioned Floor Area in Scope	38,728 ft²	11	Building Orientation (deg)	(N) 0 deg
5	Total Unconditioned Floor Area	1,113 ft²	12	Permitted Scope of Work	NewComplete
6	Total # of Stories (Habitable Above Grade)	1	13	Building Type(s)	Nonresidential
7	Total # of dwelling units	0	14	Gas Type	NaturalGas

B. PROJECT SUMMARY

Table Instructions: Table B shows which building components are included in the performance calculation. If indicated as not included, the project must show compliance prescriptively if within permit application.

Building Components Complying via Performance						Building Components Complying Prescriptively	
Envelope (see Table G)	☒	Performance	Covered Process: Commercial Kitchens	☐	Performance	*The following building components are ONLY eligible for prescriptive compliance and should be documented on the NRCC form listed if within the scope of the permit application (i.e. compliance will not be shown on the NRCC-PRF-E).*	
	☐	Not Included		☒	Not Included		
Mechanical (see Table H)	☒	Performance	Covered Process: Computer Rooms	☐	Performance	Indoor Lighting (Unconditioned)§140.6	NRCC-LTI-E
	☐	Not Included		☒	Not Included	Outdoor Lighting §140.7	NRCC-LTO-E
Domestic Hot Water (see Table I)	☒	Performance	Covered Process: Laboratory Exhaust	☐	Performance	Sign Lighting §140.8	NRCC-LTS-E
	☐	Not Included		☒	Not Included	Mandatory Measures	
Lighting (Indoor Conditioned, see Table K)	☒	Performance				*Electrical power systems, commissioning, solar ready, elevator and escalator requirements are mandatory and should on the NRCC form listed if applicable (i.e. compliance will not be shown on the NRCC-PRF-E).*	
	☐	Not Included				Electrical Power Distribution §110.11	NRCC-ELC-E
Solar Thermal Water Heating (see Table I)	☐	Performance				Commissioning §120.8	NRCC-CXR-E
	☒	Not Included				Solar Ready §110.10	NRCC-SRA-E

C1. COMPLIANCE RESULTS FOR PERFORMANCE COMPONENTS (Annual TDV Energy Use, kBtu/ft ²-yr)

COMPLIES

Energy Component	Standard Design (TDV)	Proposed Design (TDV)	Compliance Margin (TDV)[1]
Space Heating	101.62	136.49	-34.87
Space Cooling	165.54	65.73	99.81
Indoor Fans	87.54	158.49	-70.95
Heat Rejection	--	--	--
Pumps & Misc.	1.16	--	1.16
Domestic Hot Water	18.05	14.90	3.15
Indoor Lighting	38.87	31.07	7.80
ENERGY STANDARDS COMPLIANCE TOTAL	**412.78**	**406.68**	**6.10 (1.5%)**

[1] *Notes: The number in parenthesis following the Compliance Margin in column 4. represents the Percent Better than Standard.*

C2. RESULTS FOR 'ABOVE CODE' QUALIFICATIONS[1]

☐This project is pursuing CalGreen Tier 1 ☐This project is pursuing CalGreen Tier 2

Miscellaneous Energy Component	Standard Design (TDV)	Proposed Design (TDV)	Compliance Margin (TDV)[1]
Receptacle	78.26	78.26	--
Process	--	--	--
Other Lig	0.69	0.69	--
Process Motors	187.84	187.84	--
COMPLIANCE TOTAL PLUS MISCELLANEOUS COMPONENTS	**679.57**	**673.47**	**6.1 (0.9%)**

[1] *Notes: This table is used to document compliance with programs OTHER THAN Title 24 Part 6, if applicable.*

C3. ENERGY USE SUMMARY

Energy Component	Standard Design Site (MWh)	Proposed Design Site (MWh)	Margin (MWh)	Standard Design Site (MBtu)	Proposed Design Site (MBtu)	Margin (MBtu)
Space Heating	0.1	4.5	-4.4	1,996.4	2,585.5	-589.1
Space Cooling	156.0	44.3	111.7	--	--	--
Indoor Fans	105.2	214.4	-109.2	--	--	--
Heat Rejection	--	--	--	--	--	--
Pumps & Misc.	1.8	--	1.8	--	--	--
Domestic Hot Water	0.8	--	0.8	376.1	320.7	55.4
Indoor Lighting	53.9	43.1	10.8	--	--	-->
Compliance Total	**317.8**	**306.3**	**11.5**	**2,372.5**	**2,906.2**	**-533.7**
Receptacle	110.5	110.5	0.0	--	--	--
Process	--	--	--	--	--	--
Other Lig	1.0	1.0	0.0	--	--	--
Process Motors	255.7	255.7	0.0	--	--	--
TOTAL	**685.0**	**673.5**	**11.5**	**2,372.5**	**2,906.2**	**-533.7**

C4. UNMET LOAD HOURS

Thermal Zone Name	Cooling Unmet Load Hour Limit for Thermal Zone	Proposed Cooling Unmet Load Hours	Heating Unmet Load Hour Limit for Thermal Zone	Proposed Heating Unmet Load Hours
10-AUTO SHOP	150	40.5	150	1460.5
19-AG MECHANICS	150	37.5	150	1554
37-WORKSHOP	150	13.25	150	1430.75
38-ELECTRICIAN	150	9.75	150	1161

D. EXCEPTIONAL CONDITIONS

The general lighting exceptional method is employed for one or more spaces. Verify that the lighting allowances match the lighting installed on the plans and serve the areas within each space as identified in the compliance model.

This project uses the Simplified Geometry Performance Modeling Approach which is not capable of modeling daylighting controls and assumes the prescriptive Secondary Daylit Control requirements are met. PRESCRIPTIVE COMPLIANCE documentation (form NRCC-LTI-02-E) for the requirements of section 140.6(d) Automatic Daylighting Controls in Secondary Daylit Zones is required.

The user model includes space(s) that are designed to be served by mechanical cooling systems, but the cooling systems were not included in the simulation model. A cooling system has been modeled for both the proposed and standard cases.

The user model includes space(s) without sufficient cooling equipment. Cooling equipment has been added to the model to meet cooling loads.

E. HERS VERIFICATION

This Section Does Not Apply.

G1. ENVELOPE GENERAL INFORMATION (conditioned spaces only)

1	2	3	4
Opaque Surfaces & Orientation	**Total Gross Surface Area (ft²)**	**Total Fenestration Area (ft²)**	**Window to Wall Ratio (%)**
North-Facing[1]	9,889 ft²	1,715 ft²	17.3%
East-Facing[2]	8,757 ft²	1,646 ft²	18.8%
South-Facing[3]	10,723 ft²	1,554 ft²	14.5%
West-Facing[4]	9,053 ft²	1,379 ft²	15.2%
Total	**38,421 ft²**	**6,294 ft²**	**16.4%**
Roof	38,748 ft²	0 ft²	00.0%

Notes:
[1] *North-Facing is oriented to within 45 degrees of true north, including 45°00'00" east of north (NE), but excluding 45°00'00" west of north (NW).*
[2] *East-Facing is oriented to within 45 degrees of true east, including 45°00'00" south of east (SE), but excluding 45°00'00" north of east (NE).*
[3] *South-Facing is oriented to within 45 degrees of true south, including 45°00'00" west of south (SW), but excluding 45°00'00" east of south (SE).*
[4] *West-Facing is oriented to within 45 degrees of true west, including 45°00'00" north of due west (NW), but excluding 45°00'00" south of west (SW).*

G3. OPAQUE SURFACE ASSEMBLY SUMMARY

1 Surface Name	2 Surface Type	3 Area (ft²)	4 Framing Type	5 Cavity R-Value	6 Continuous R-Value	7 Units	8 Value	9 Description of Assembly Layers	10 Status[1]
BUILDING D WALLS10	ExteriorWall	11242	Metal	25	12	U-Factor	0.054	Metal Siding - 1/16 in. Vapor permeable felt - 1/8 in. Cellular polyisocyanurate (unfaced) - 2 in. R12 Gypsum Board - 5/8 in. Metal framed wall, 16in. OC, 7.25in., R-25 Gypsum Board - 5/8 in.	N
Slab On Grade16	UndergroundFloor	39842	NA	0	NA	F-Factor	0.73	Slab Type = UnheatedSlabOnGrade Insulation Orientation = None Insulation R-Value = R0	N
BUILDING D ROOF18	Roof	11762	NA	0	35	U-Factor	0.027	Single Ply Roofing - 1/4 in. Vapor permeable felt - 1/8 in. Plywood - 1/2 in. Cellular polyisocyanurate (unfaced) - 6 in. R35 Metal Deck - 1/16 in.	N
MOHAWK WALLS34	ExteriorWall	2759	Metal	25	12	U-Factor	0.054	Metal Siding - 1/16 in. Vapor permeable felt - 1/8 in. Cellular polyisocyanurate (unfaced) - 2 in. R12 Gypsum Board - 5/8 in. Metal framed wall, 16in. OC, 7.25in., R-25 Gypsum Board - 5/8 in.	N
MOHAWK ROOF41	Roof	620	Metal	19	12	U-Factor	0.047	Cellular polyisocyanurate (unfaced) - 2 in. R12 Metal framed roof, 16in. OC, S.Sin., R-19 Gypsum Board - 5/8 in.	N
R-0 Wall Metal Stud62	InteriorWall	1096	NA	0	NA	U-Factor	0.314	Gypsum Board - 1/2 in. Air - Cavity - Wall Roof Ceiling - 4 in. or more Gypsum Board - 1/2 in.	N

G3. OPAQUE SURFACE ASSEMBLY SUMMARY

1 Surface Name	2 Surface Type	3 Area (ft²)	4 Framing Type	5 Cavity R-Value	6 Continuous R-Value	7 Units	8 Value	9 Description of Assembly Layers	10 Status[1]
BUILDING E WALLS125	ExteriorWall	8953	Metal	25	12	U-Factor	0.054	Metal Siding - 1/16 in. Vapor permeable felt - 1/8 in. Cellular polyisocyanurate (unfaced) - 2 in. R12 Gypsum Board - 5/8 in. Metal framed wall, 16in. OC, 7.25in., R-25 Gypsum Board - 5/8 in.	N
BUILDING E ROOF133	Roof	8053	NA	0	35	U-Factor	0.027	Single Ply Roofing - 1/4 in. Vapor permeable felt - 1/8 in. Plywood - 1/2 in. Cellular polyisocyanurate (unfaced) - 6 in. R35 Metal Deck - 1/16 in.	N
BUILDING F EXTERIOR WAL193	ExteriorWall	17399	Metal	25	12	U-Factor	0.054	Metal Siding - 1/16 in. Vapor permeable felt - 1/8 in. Cellular polyisocyanurate (unfaced) - 2 in. R12 Gypsum Board - 5/8 in. Metal framed wall, 16in. OC, 7.25in., R-25 Gypsum Board - 5/8 in.	N
BUILDING F ROOF198	Roof	19427	NA	0	35	U-Factor	0.027	Single Ply Roofing - 1/4 in. Vapor permeable felt - 1/8 in. Plywood - 1/2 in. Cellular polyisocyanurate (unfaced) - 6 in. R35 Metal Deck - 1/16 in.	N

[1] *Status: N - New, A – Altered, E – Existing*

G4. OPAQUE DOOR SUMMARY

1 Assembly Name	2 Overall U-factor	3 Status[1]
Metal Door14	0.700	N
METAL ROLL UP357	1.450	N

G5. FENESTRATION ASSEMBLY SUMMARY

1 Fenestration Assembly Name / Tag or I.D.	2 Fenestration Type / Product Type / Frame Type	3 Certification Method[1]	4 Assembly Method	5 Area ft²	6 Overall U-factor	7 Overall SHGC	8 Overall VT	9 Status[2]
Climaguard 70/36	VerticalFenestration CurtainWall N/A	NFRC Rated	SiteBuilt	5875	0.29	0.39	0.70	N
TRANSLUCENT PANELS	VerticalFenestration FixedWindow N/A	NFRC Rated	SiteBuilt	151	0.23	0.30	0.26	N
TRANSPARENT PANEL	VerticalFenestration FixedWindow N/A	NFRC Rated	SiteBuilt	268	0.23	0.30	0.26	N
TRANSPARENT PANEL_Clerestory	VerticalFenestration FixedWindow N/A			NaN	0.23	0.30	0.00	N

[1] *Newly installed fenestration shall have a certified NFRC Label Certificate or use the CEC default tables found in Table 110.6-A and Table 110.6-B. Center of Glass (COG) values are for the glass only, determined by the manufacturer, and are shown for ease of verification. Site built fenestration values are calculated per Nonresidential Appendix NA6 and are used in the analysis.*
[2] *Status: N - New, A – Altered, E – Existing*

G6. OVERHANG DETAILS

1 Fenestration Tag/ID	2 Orientation	3 Depth(ft.)	4 Height from Bottom of Sill to Overhang(ft)	5 Right Extent(ft)	6 Left Extent(ft)
F4248	North	19.5	14	50.0	50.0
F5254	North	19.5	14	50.0	33.0
F11260	North	19.5	14	50.0	33.0

G6. OVERHANG DETAILS

1 Fenestration Tag/ID	2 Orientation	3 Depth(ft.)	4 Height from Bottom of Sill to Overhang(ft)	5 Right Extent(ft)	6 Left Extent(ft)
A275	North	7.0	17	1.0	50.0
A281	North	7.0	17	7.0	50.0
E286	South	7.0	16	32.0	50.0
D291	South	7.0	20	20.0	50.0
B301	East	7.0	20	50.0	12.8
C303	South	7.0	16	11.5	50.0
E55	West	7.3	17	50.0	19.8
D144	West	19.5	14	50.0	33.0
D149	West	19.5	14	50.0	50.0
D154	West	19.5	14	50.0	50.0
B11	South	4.0	17	33.3	15.3
B29	South	4.0	17	22.3	26.3
A126	North	4.0	17	22.3	26.3
B138	East	7.0	20	10.3	50.0
B1194	South	7.0	20	50.0	50.0
B2195	South	7.0	20	50.0	50.0
B215	East	7.0	20	10.3	50.0
(LEFT)216	East	7.0	20.1	41.5	30.5
(RIGHT)217	East	7.0	20.1	30.5	41.5
(ABOVE)218	East	7.0	6	32.5	32.5

H1. DRY SYSTEM EQUIPMENT (furnaces, air handling units, heat pumps, VRF, economizers etc.)

1 Equipment Name	2 Equipment Type	3 Qty	4 Heating	5 Heating	6 Heating	7 Heating	8 Cooling	9 Cooling	10 Cooling	11 Economizer Type (if present)	12 Status[1]
			Total Heating Output (kBtu/h)	Supp Heat Output (kBtuh)	Efficiency Unit	Efficiency	Total Cooling Output (kBtu/h)	Efficiency Unit	Efficiency		
HC-D1	SZAC (Packaged3Phase)	1	49	0	AFUE	81.0	51	SEER/EER	19.00/10.00	DifferentialDryBulb	N
HC-D2	SZAC (Packaged3Phase)	1	49	0	AFUE	81.0	51	SEER/EER	19.00/10.00	DifferentialDryBulb	N
IDU-D1A	SZHP (Split1Phase)	1	19	0	HSPF	10.500	17	SEER/EER	21.500/13.500	NoEconomizer	N
IDU-D1B	SZHP (Split1Phase)	1	19	0	HSPF	10.500	17	SEER/EER	21.500/13.500	NoEconomizer	N
IDU-D2A	SZHP (Split1Phase)	1	9	0	HSPF	10.500	9	SEER/EER	21.500/13.500	NoEconomizer	N
IDU-D2B	SZHP (Split1Phase)	1	9	0	HSPF	10.500	9	SEER/EER	21.500/13.500	NoEconomizer	N
IDU-D2C	SZHP (Split1Phase)	1	19	0	HSPF	10.500	17	SEER/EER	21.500/13.500	NoEconomizer	N
IDU-D3A	SZAC (CRAC)	1	0	0	NA	NA	22	SEER/EER	17.50/10.90	NoEconomizer	N
EC-D1&D2	HV (NA)	2	138	0	AFUE	80.0	0	NA	NA	NoEconomizer	N
HC-E1	SZAC (Packaged3Phase)	1	54	0	AFUE	81.0	62	SEER/EER	15.00/11.00	DifferentialDryBulb	N
HC-E2	SZAC (Packaged3Phase)	1	49	0	AFUE	81.0	31	SEER/EER	20.00/9.70	DifferentialDryBulb	N
IDU-E1A	SZHP (Split1Phase)	1	9	0	HSPF	10.000	9	SEER/EER	23.800/12.500	NoEconomizer	N
IDU-E1B	SZHP (Split1Phase)	1	9	0	HSPF	10.000	9	SEER/EER	23.800/12.500	NoEconomizer	N
IDU-E1C	SZHP (Split1Phase)	1	9	0	HSPF	10.000	9	SEER/EER	23.800/12.500	NoEconomizer	N
IDU-E2A	SZAC (CRAC)	1	0	0	NA	NA	22	SEER/EER	17.50/10.90	NoEconomizer	N
EC-E1	HV (NA)	1	128	0	AFUE	80.0	0	NA	NA	NoEconomizer	N
HC-F1	SZAC (Packaged3Phase)	1	49	0	AFUE	81.0	51	SEER/EER	19.00/10.00	DifferentialDryBulb	N
HC-F2	SZAC (Packaged3Phase)	1	49	0	AFUE	81.0	51	SEER/EER	19.00/10.00	DifferentialDryBulb	N
IDU-F1A	SZHP (Split1Phase)	1	19	0	HSPF	10.000	17	SEER/EER	23.800/12.500	NoEconomizer	N
IDU-F1B	SZHP (Split1Phase)	1	9	0	HSPF	10.000	9	SEER/EER	23.800/12.500	NoEconomizer	N
IDU-F2A	SZHP (Split1Phase)	1	9	0	HSPF	10.300	9	SEER/EER	22.500/12.500	NoEconomizer	N
IDU-F2B	SZHP (Split1Phase)	1	9	0	HSPF	10.300	9	SEER/EER	22.500/12.500	NoEconomizer	N
IDU-F3A	SZHP (Split1Phase)	1	9	0	HSPF	10.800	9	SEER/EER	20.000/13.000	NoEconomizer	N

H1. DRY SYSTEM EQUIPMENT (furnaces, air handling units, heat pumps, VRF, economizers etc.)

1 Equipment Name	2 Equipment Type	3 Qty	4 Heating	5 Heating	6 Heating	7 Heating	8 Cooling	9 Cooling	10 Cooling	11 Economizer Type (if present)	12 Status[1]
			Total Heating Output (kBtu/h)	Supp Heat Output (kBtuh)	Efficiency Unit	Efficiency	Total Cooling Output (kBtu/h)	Efficiency Unit	Efficiency		
IDU-F4A	SZAC (CRAC)	1	0	0	NA	NA	22	SEER/EER	17.50/10.90	NoEconomizer	N
IDU-F5A	SZHP (Split1Phase)	1	9	0	HSPF	10.300	9	SEER/EER	22.500/12.500	NoEconomizer	N
IDU-F5B	SZHP (Split1Phase)	1	9	0	HSPF	10.300	9	SEER/EER	22.500/12.500	NoEconomizer	N
IDU-F6A	SZHP (Split1Phase)	1	12	0	HSPF	10.200	12	SEER/EER	22.400/12.500	NoEconomizer	N
IDU-F6B	SZHP (Split1Phase)	1	19	0	HSPF	10.200	17	SEER/EER	22.400/12.500	NoEconomizer	N
IDU-F6C	SZHP (Split1Phase)	1	19	0	HSPF	10.200	17	SEER/EER	22.400/12.500	NoEconomizer	N
IDU-F7A	SZHP (Split1Phase)	1	19	0	HSPF	10.300	17	SEER/EER	20.000/12.500	NoEconomizer	N
EC-F1	HV (NA)	1	128	0	AFUE	80.0	0	NA	NA	NoEconomizer	N
EC-F2	HV (NA)	1	128	0	AFUE	80.0	0	NA	NA	NoEconomizer	N
EC-F3 2.0	HV (NA)	1	128	0	AFUE	80.0	0	NA	NA	DifferentialEnthalpy	N
EC-F4 2.0	HV (NA)	1	128	0	AFUE	80.0	0	NA	NA	DifferentialEnthalpy	N

[1] *Status: N - New, A – Altered, E – Existing*

H2. FAN SYSTEMS SUMMARY

1	2	3	4	5	6	7	8	9	10	11	12	13	14
Name or Item Tag	Qty	Design OA	Supply Fan					Return Fan					Status[1]
		CFM	CFM	Modeling Method	Power	Power Units	Control	CFM	Modeling Method	Power	Power Units	Control	
HC-D1	1	932	2000	BrakeHorsePower	1.000	bhp	ConstantVolume	NA	NA	NA	NA	NA	N
HC-D2	1	928	2000	BrakeHorsePower	1.000	bhp	ConstantVolume	NA	NA	NA	NA	NA	N
IDU-D1A	1	0	420	BrakeHorsePower	0.052	bhp	ConstantVolume	NA	NA	NA	NA	NA	N
IDU-D1B	1	0	420	BrakeHorsePower	0.052	bhp	ConstantVolume	NA	NA	NA	NA	NA	N
IDU-D2A	1	15	380	BrakeHorsePower	0.052	bhp	ConstantVolume	NA	NA	NA	NA	NA	N
IDU-D2B	1	14	380	BrakeHorsePower	0.052	bhp	ConstantVolume	NA	NA	NA	NA	NA	N

H2. FAN SYSTEMS SUMMARY

1	2	3	4	5	6	7	8	9	10	11	12	13	14
Name or Item Tag	Qty	Design OA	Supply Fan					Return Fan					Status[1]
		CFM	CFM	Modeling Method	Power	Power Units	Control	CFM	Modeling Method	Power	Power Units	Control	
IDU-D2C	1	0	480	BrakeHorsePower	0.270	bhp	ConstantVolume	NA	NA	NA	NA	NA	N
IDU-D3A	1	0	640	BrakeHorsePower	0.096	bhp	ConstantVolume	NA	NA	NA	NA	NA	N
EC-D1&D2	2	0	13000	BrakeHorsePower	5.900	bhp	ConstantVolume	NA	NA	NA	NA	NA	N
HC-E1	1	1558	2400	BrakeHorsePower	1.390	bhp	ConstantVolume	NA	NA	NA	NA	NA	N
HC-E2	1	541	1200	BrakeHorsePower	0.700	bhp	ConstantVolume	NA	NA	NA	NA	NA	N
IDU-E1A	1	18	380	BrakeHorsePower	0.052	bhp	ConstantVolume	NA	NA	NA	NA	NA	N
IDU-E1B	1	17	380	BrakeHorsePower	0.052	bhp	ConstantVolume	NA	NA	NA	NA	NA	N
IDU-E1C	1	16	380	BrakeHorsePower	0.052	bhp	ConstantVolume	NA	NA	NA	NA	NA	N
IDU-E2A	1	0	640	BrakeHorsePower	0.096	bhp	ConstantVolume	NA	NA	NA	NA	NA	N
EC-E1	1	82	14000	BrakeHorsePower	7.100	bhp	ConstantVolume	NA	NA	NA	NA	NA	N
HC-F1	1	639	2000	BrakeHorsePower	1.000	bhp	ConstantVolume	NA	NA	NA	NA	NA	N
HC-F2	1	648	2000	BrakeHorsePower	1.000	bhp	ConstantVolume	NA	NA	NA	NA	NA	N
IDU-F1A	1	0	420	BrakeHorsePower	0.052	bhp	ConstantVolume	NA	NA	NA	NA	NA	N
IDU-F1B	1	23	380	BrakeHorsePower	0.052	bhp	ConstantVolume	NA	NA	NA	NA	NA	N
IDU-F2A	1	18	380	BrakeHorsePower	0.052	bhp	ConstantVolume	NA	NA	NA	NA	NA	N
IDU-F2B	1	18	380	BrakeHorsePower	0.052	bhp	ConstantVolume	NA	NA	NA	NA	NA	N
IDU-F3A	1	16	380	BrakeHorsePower	0.052	bhp	ConstantVolume	NA	NA	NA	NA	NA	N
IDU-F4A	1	0	640	BrakeHorsePower	0.096	bhp	ConstantVolume	NA	NA	NA	NA	NA	N
IDU-F5A	1	17	380	BrakeHorsePower	0.052	bhp	ConstantVolume	NA	NA	NA	NA	NA	N
IDU-F5B	1	17	380	BrakeHorsePower	0.052	bhp	ConstantVolume	NA	NA	NA	NA	NA	N
IDU-F6A	1	23	353	BrakeHorsePower	0.180	bhp	ConstantVolume	NA	NA	NA	NA	NA	N
IDU-F6B	1	44	480	BrakeHorsePower	0.270	bhp	ConstantVolume	NA	NA	NA	NA	NA	N
IDU-F6C	1	239	480	BrakeHorsePower	0.270	bhp	ConstantVolume	NA	NA	NA	NA	NA	N
IDU-F7A	1	0	420	BrakeHorsePower	0.052	bhp	ConstantVolume	NA	NA	NA	NA	NA	N
EC-F1	1	2886	12500	BrakeHorsePower	5.400	bhp	ConstantVolume	NA	NA	NA	NA	NA	N

PLOT DATE: 10/30/2022 3:58:49 PM

FOR BID ONLY

Teter, LLP expressly reserves its common law copyright and other property rights in these plans. This document, the ideas and designs incorporated herein, as an instrument of professional service, is not to be used in whole or part, for any other project without prior written authorization.

\\tef-file11\Users\matt.soderstrom_TETR\Documents\120324-M-COS Tulare CTE_matt.soderstrom.rvt

H2. FAN SYSTEMS SUMMARY

1	2	3	4	5	6	7	8	9	10	11	12	13	14
Name or Item Tag	Qty	Design OA	Supply Fan					Return Fan					Status[1]
		CFM	CFM	Modeling Method	Power	Power Units	Control	CFM	Modeling Method	Power	Power Units	Control	
EC-F2	1	2187	9500	BrakeHorsePower	2.800	bhp	ConstantVolume	NA	NA	NA	NA	NA	N
EC-F3 2.0	1	3086	13500	BrakeHorsePower	6.400	bhp	ConstantVolume	NA	NA	NA	NA	NA	N
EC-F4 2.0	1	3320	14000	BrakeHorsePower	6.100	bhp	ConstantVolume	NA	NA	NA	NA	NA	N

[1] Status: N - New, A – Altered, E – Existing

H3. EXHAUST FAN SUMMARY

1	2	3	4	5	6	7	8
System ID	Zone Name	Qty	CFM	Motor BHP	Power Per Flow (W/cfm)	Total Static Pressure (in. H_2O)	Status[1]
RESTROOM26	3-RESTROOM	1	228	0.062	0.237	1.12	N
RESTROOM42	4-RESTROOM	1	228	0.062	0.237	1.12	N
OFFICE152	5-OFFICE	1	110	0.020	0.159	0.75	N
AUTO SHOP STORAGE63	7-AUTO SHOP STORAGE	1	700	0.760	0.947	4.48	N
ELECTRICAL83	9-ELECTRICAL	1	175	0.092	0.457	2.16	N
AUTO SHOP89	10-AUTO SHOP	2	5,558	0.800	0.126	0.59	N
OFFICE141	14-OFFICE	1	60	0.020	0.291	1.37	N
ELECTRICAL162	18-ELECTRICAL	1	160	59.000	289.411	1520.94	N
AG MECHANICS168	19-AG MECHANICS	1	5,835	0.840	0.126	0.59	N
RESTROOM199	22-RESTROOM	1	1,050	0.150	0.125	0.59	N
RESTROOM226	24-RESTROOM	1	228	0.062	0.237	1.12	N
LACTATION236	25-LACTATION	1	25	0.010	0.349	1.65	N
OFFICE251	27-OFFICE	1	40	0.020	0.436	2.06	N
OFFICE257	28-OFFICE	1	20	0.010	0.436	2.06	N
ELECTRICAL268	30-ELECTRICAL	1	200	0.124	0.540	2.55	N
OFFICE278	32-OFFICE	1	40	0.010	0.218	1.03	N

H3. EXHAUST FAN SUMMARY

1	2	3	4	5	6	7	8
System ID	Zone Name	Qty	CFM	Motor BHP	Power Per Flow (W/cfm)	Total Static Pressure (in. H_2O)	Status[1]
CONFERENCE294	35-CONFERENCE	1	190	0.030	0.138	0.65	N
RESTROOM306	36-RESTROOM	1	228	0.062	0.237	1.12	N
WORKSHOP317	37-WORKSHOP	1	1,800	0.330	0.160	0.76	N
ELECTRICIAN335	38-ELECTRICIAN	1	1,400	0.170	0.106	0.50	N
ENVIRONMENTAL 2.0350	39-ENVIRONMENTAL 2.0	1	2,100	0.340	0.141	0.67	N
INDUSTRIAL MAINTENANCE 2.367	40-INDUSTRIAL MAINTENANCE 2.	1	2,100	0.340	0.141	0.67	N

[1] Status: N - New, A – Altered, E – Existing

H4. Wet System Equipment(boilers,chillers,cooling towers,etc.)

This Section Does Not Apply

H5. PUMPS

This Section Does Not Apply

H6. SYSTEM SPECIAL FEATURES

1	2	3	4
System Name	Equipment Type	Window Interlocks per §140.4(n)	Other Special Features and Controls
HC-01	SZAC	NA	Zones With CO2Sensor Vent. Control Differential Drybulb Economizer
HC-02	SZAC	NA	Zones With CO2Sensor Vent. Control Differential Drybulb Economizer
EC-D1&D2	HV	NA	Evaporative Cooler (Direct)
HC-E1	SZAC	NA	Zones With CO2Sensor Vent. Control Differential Drybulb Economizer
HC-E2	SZAC	NA	Zones With CO2Sensor Vent. Control Differential Drybulb Economizer
EC-E1	HV	NA	Evaporative Cooler (Direct)

H6. SYSTEM SPECIAL FEATURES

1	2	3	4
System Name	Equipment Type	Window Interlocks per §140.4(n)	Other Special Features and Controls
HC-F1	SZAC	NA	Zones With CO2Sensor Vent. Control Differential Drybulb Economizer
HC-F2	SZAC	NA	Zones With CO2Sensor Vent. Control Differential Drybulb Economizer
EC-F1	HV	NA	Evaporative Cooler (Direct)
EC-F2	HV	NA	Evaporative Cooler (Direct)
EC-F3 2.0	HV	NA	Zones With CO2Sensor Vent. Control Differential Enthalpy Economizer Evaporative Cooler (Direct)
EC-F4 2.0	HV	NA	Zones With CO2Sensor Vent. Control Differential Enthalpy Economizer Evaporative Cooler (Direct)
DHW1 - SHW	Service Hot Water, Primary Only	NA	Fixed Temperature Control

Notes: This table includes controls related to the performance path only. For projects using the prescriptive path, mandatory and prescriptive controls requirements are documented on the NRCC-MCH-E

H7. NONRESIDENTIAL VENTILATION

1	2	3	4	5	6	7
Zone Name	Mechanical Ventilation					DCV or Occupant Sensor Controls, or Both
	Ventilation Function	# of people	Supply OA CFM	Exhaust CFM	Conditioned Area (sf)	
1-COMPUTER LAB	Education - Computer lab	62.15	932	0	1243	DCV
2-COMPUTER LAB	Education - Computer lab	61.86	928	0	1237	DCV
3-RESTROOM	Exhaust - Toilets, public	1.16	0	228	116	NA
4-RESTROOM	Exhaust - Toilets, public	1.16	0	228	116	NA
5-OFFICE	Office - Office space	1.02	15	110	102	NA
6-OFFICE	Office - Office space	0.95	14	0	95	NA
7-AUTO SHOP STORAGE	Exhaust - Auto repair rooms	10.99	0	700	440	NA
8-COMM	General - Unoccupied	0.20	0	0	132	NA

H7. NONRESIDENTIAL VENTILATION

1	2	3	4	5	6	7
Zone Name	Mechanical Ventilation					DCV or Occupant Sensor Controls, or Both
	Ventilation Function	# of people	Supply OA CFM	Exhaust CFM	Conditioned Area (sf)	
10-AUTO SHOP	Exhaust - Auto repair rooms General - Unoccupied	183.23	0	11116	8157	NA
12-WORKSHOP	Misc - All others	103.89	1558	0	2078	DCV
13-WORKSHOP	Misc - All others	36.07	541	0	721	DCV
14-OFFICE	Office - Office space	1.17	18	60	117	NA
15-OFFICE	Office - Office space	1.16	17	0	116	NA
16-OFFICE	Office - Office space	1.07	16	0	107	NA
17-COMM	General - Unoccupied	0.17	0	0	116	NA
19-AG MECHANICS	Exhaust - Auto repair rooms Misc - All others General Unoccupied	107.13	82	5835	4567	NA
21-CLASSROOM	Education - Lecture/postsecondary classroom	42.62	639	0	853	DCV
22-RESTROOM	Exhaust - Toilets, public Education - Lecture/postsecondary classroom	45.61	648	1050	1346	DCV
24-RESTROOM	Exhaust - Toilets, public	0.58	0	228	116	NA
25-LACTATION	Misc - All others	1.56	23	25	156	NA
26-OFFICE	Office - Office space	1.21	18	0	121	NA
27-OFFICE	Office - Office space	1.22	18	40	122	NA
28-OFFICE	Office - Office space	1.07	16	20	107	NA
29-COMM	General - Unoccupied	0.17	0	0	114	NA
31-OFFICE	Office - Office space	1.11	17	0	111	NA
32-OFFICE	Office - Office space	1.13	17	40	113	NA
33-OFFICE	Office - Office space	1.56	23	0	156	NA
34-OFFICE	Office - Office space	2.91	44	0	291	NA
35-CONFERENCE	General - Conference/meeting	15.96	239	190	239	NA
36-RESTROOM	Exhaust - Toilets, public	0.58	0	228	116	NA
37-WORKSHOP	Education - Wood shop Misc - All others	192.41	2886	1800	3848	NA

H7. NONRESIDENTIAL VENTILATION

1	2	3	4	5	6	7
Zone Name	Mechanical Ventilation					DCV or Occupant Sensor Controls, or Both
	Ventilation Function	# of people	Supply OA CFM	Exhaust CFM	Conditioned Area (sf)	
38-ELECTRICIAN	Education - Metal shop	145.82	2187	1400	2916	NA
39-ENVIRONMENTAL 2.0	Education - Wood shop	205.75	3086	2100	4115	DCV
40-INDUSTRIAL MAINTENANCE 2.	Education - Metal shop	221.36	3320	2100	4427	DCV

H8. HIGH-RISE RESIDENTIAL DWELLING UNIT AND HOTEL/MOTEL VENTILATION

This Section Does Not Apply

H9. ZONAL SYSTEM AND TERMINAL UNIT SUMMARY

1	2	3	4	5	6	7	8	9	10	11	12	13
System ID	Zone Name	System Type	Qty	Rated Capacity (kBtuh)		Airflow (cfm)			Fan			
				Heating	Cooling	Design	Min.	Min. Ratio	Power	Power Units	Cycles	VSD
1-COMPUTER LAB-Trm	1-COMPUTER LAB	Uncontrolled	1	NA	NA	2000	NA	0.00	1.000	bhp	NA	☐
2-COMPUTER LAB-Trm	2-COMPUTER LAB	Uncontrolled	1	NA	NA	2000	NA	0.00	1.000	bhp	NA	☐
3-RESTROOM-Trm	3-RESTROOM	Uncontrolled	1	NA	NA	420	NA	0.00	0.052	bhp	NA	☐
4-RESTROOM-Trm	4-RESTROOM	Uncontrolled	1	NA	NA	420	NA	0.00	0.052	bhp	NA	☐
5-OFFICE-Trm	5-OFFICE	Uncontrolled	1	NA	NA	380	NA	0.00	0.052	bhp	NA	☐
6-OFFICE-Trm	6-OFFICE	Uncontrolled	1	NA	NA	380	NA	0.00	0.052	bhp	NA	☐
7-AUTO SHOP STORAGE-Trm	7-AUTO SHOP STORAGE	Uncontrolled	1	NA	NA	640	NA	0.00	0.096	bhp	NA	☐
8-COMM-Trm	8-COMM	Uncontrolled	1	NA	NA	480	NA	0.00	0.270	bhp	NA	☐
10-AUTO SHOP-Trm	10-AUTO SHOP	Uncontrolled	2	NA	NA	26000	NA	0.00	5.900	bhp	NA	☐
12-WORKSHOP-Trm	12-WORKSHOP	Uncontrolled	1	NA	NA	2400	NA	0.00	1.390	bhp	NA	☐
13-WORKSHOP-Trm	13-WORKSHOP	Uncontrolled	1	NA	NA	1200	NA	0.00	0.700	bhp	NA	☐
14-OFFICE-Trm	14-OFFICE	Uncontrolled	1	NA	NA	380	NA	0.00	0.052	bhp	NA	☐

H9. ZONAL SYSTEM AND TERMINAL UNIT SUMMARY

1	2	3	4	5	6	7	8	9	10	11	12	13
System ID	Zone Name	System Type	Qty	Rated Capacity (kBtuh)		Airflow (cfm)			Fan			
				Heating	Cooling	Design	Min.	Min. Ratio	Power	Power Units	Cycles	VSD
15-OFFICE-Trm	15-OFFICE	Uncontrolled	1	NA	NA	380	NA	0.00	0.052	bhp	NA	☐
16-OFFICE-Trm	16-OFFICE	Uncontrolled	1	NA	NA	380	NA	0.00	0.052	bhp	NA	☐
17-COMM-Trm	17-COMM	Uncontrolled	1	NA	NA	640	NA	0.00	0.096	bhp	NA	☐
19-AG MECHANICS-Trm	19-AG MECHANICS	Uncontrolled	1	NA	NA	14000	NA	0.00	7.100	bhp	NA	☐
21-CLASSROOM-Trm	21-CLASSROOM	Uncontrolled	1	NA	NA	2000	NA	0.00	1.000	bhp	NA	☐
22-RESTROOM-Trm	22-RESTROOM	Uncontrolled	1	NA	NA	2000	NA	0.00	1.000	bhp	NA	☐
24-RESTROOM-Trm	24-RESTROOM	Uncontrolled	1	NA	NA	420	NA	0.00	0.052	bhp	NA	☐
25-LACTATION-Trm	25-LACTATION	Uncontrolled	1	NA	NA	380	NA	0.00	0.052	bhp	NA	☐
26-OFFICE-Trm	26-OFFICE	Uncontrolled	1	NA	NA	380	NA	0.00	0.052	bhp	NA	☐
27-OFFICE-Trm	27-OFFICE	Uncontrolled	1	NA	NA	380	NA	0.00	0.052	bhp	NA	☐
28-OFFICE-Trm	28-OFFICE	Uncontrolled	1	NA	NA	380	NA	0.00	0.052	bhp	NA	☐
29-COMM-Trm	29-COMM	Uncontrolled	1	NA	NA	640	NA	0.00	0.096	bhp	NA	☐
31-OFFICE-Trm	31-OFFICE	Uncontrolled	1	NA	NA	380	NA	0.00	0.052	bhp	NA	☐
32-OFFICE-Trm	32-OFFICE	Uncontrolled	1	NA	NA	380	NA	0.00	0.052	bhp	NA	☐
33-OFFICE-Trm	33-OFFICE	Uncontrolled	1	NA	NA	353	NA	0.00	0.180	bhp	NA	☐
34-OFFICE-Trm	34-OFFICE	Uncontrolled	1	NA	NA	480	NA	0.00	0.270	bhp	NA	☐
35-CONFERENCE-Trm	35-CONFERENCE	Uncontrolled	1	NA	NA	480	NA	0.00	0.270	bhp	NA	☐
36-RESTROOM-Trm	36-RESTROOM	Uncontrolled	1	NA	NA	420	NA	0.00	0.052	bhp	NA	☐
37-WORKSHOP-Trm	37-WORKSHOP	Uncontrolled	1	NA	NA	12500	NA	0.00	5.400	bhp	NA	☐
38-ELECTRICIAN-Trm	38-ELECTRICIAN	Uncontrolled	1	NA	NA	9500	NA	0.00	2.800	bhp	NA	☐
39-ENVIRONMENTAL 2.0-Trm	39-ENVIRONMENTAL 2.0	Uncontrolled	1	NA	NA	13500	NA	0.00	6.400	bhp	NA	☐
40-INDUSTRIAL MAINTENANCE 2.-Trm	40-INDUSTRIAL MAINTENANCE 2.	Uncontrolled	1	NA	NA	14000	NA	0.00	6.100	bhp	NA	☐

H10. EVAPORATIVE COOLER SUMMARY

1	2	3	4	5	6	7	8	9
System ID	Type	Qty	Effectiveness	Pump Power (Watts)	Secondary Fan Flow Rate (cfm)	Secondary Fan Total Efficiency	Secondary Fan Static Pressure (in H_2O)	Secondary Air Source
ECD-EC-D188	Direct	2	0.89	0	NA	NA	NA	NA
ECD-EC-E1167	Direct	1	0.89	0	NA	NA	NA	NA
ECD-EC-F1316	Direct	1	0.89	0	NA	NA	NA	NA
ECD-EC-F2334	Direct	1	0.89	0	NA	NA	NA	NA
ECD-EC-F3 2.0349	Direct	1	0.89	0	NA	NA	NA	NA
ECD-EC-F4 2.0366	Direct	1	0.89	0	NA	NA	NA	NA

H11. HEAT RECOVERY SUMMARY

This Section Does Not Apply

I1. WATER HEATER EQUIPMENT SUMMARY

1	2	3	4	5	6	7	8	9	10	11	12	13	14
Name	Heater Element Type	Tank Type	Qty	Tank Vol (gal)	Rated Input	Rated Input Unit	Efficiency	Efficiency Unit	Tank Insulation R-value (Int/Ext)	Standby Loss Fraction	1st Hour Rating or Flow Rate (gal)	Heat Pump Type	Tank Location or Ambient Condition
Navien NPE-240A22	Gas	Instantaneous	4	1.00	200	kBtu/h	0.95	UEF	NA	NA	6	NA	NA
A. O. SMITH #BTXL-100 CYC3	Gas	Storage	1	75.00	100	kBtu/h	0.62	UEF	NA	NA	83	NA	NA

K1. INDOOR CONDITIONED LIGHTING GENERAL INFO

1	2	3	4	5	6
Occupancy Type [1]	Conditioned Floor Area [2] (ft^2)	Installed Lighting Power (Watts)	Lighting Control Credits (Watts)	Additional (Custom) Allowance	
				Area Category Footnotes (Watts)	Tailored Method (Watts)
Restrooms	947	554	0	170	0
All other	1,543	629	0	0	0
Office Area (<250 square feet)	1,558	736	0	0	0
Electrical, Mechanical, Telephone Rooms	362	150	0	46	0
Convention, Conference, Multipurpose and Meeting Area	239	120	0	0	0
Classroom, Lecture, Training, Vocational Areas	34,078	18,747	0	0	0
Building Totals:	**38,727**	**20,936**	**0**	**216**	**0**

[1] See Table 140.6-C
[2] See NRCC-LTI-01-E for unconditioned spaces
[3] Lighting information for existing spaces modeled is not included in the table

K2. INDOOR CONDITIONED LIGHTING SCHEDULE

Luminaire Schedule (includes all permanent installed lighting in conditioned space, and portable lighting over 0.3 w/ft^2 in offices)

1	2	3	4	5	6
Name or Item Tag	Complete Luminaire Description (i.e., 3-lamp fluorescent troffer, F32T8, one dimmable electronic ballast)	Watts per luminaire	How Wattage is Determined	Total Number Luminaires	Installed Watts
L-1	L3	24	According to §130.0(c)	24	576
L-10	DP1	153	According to §130.0(c)	1	153
L-11	B1	25	According to §130.0(c)	2	50

K2. INDOOR CONDITIONED LIGHTING SCHEDULE

Luminaire Schedule (includes all permanent installed lighting in conditioned space, and portable lighting over 0.3 w/ft^2 in offices)

1	2	3	4	5	6
Name or Item Tag	Complete Luminaire Description (i.e., 3-lamp fluorescent troffer, F32T8, one dimmable electronic ballast)	Watts per luminaire	How Wattage is Determined	Total Number Luminaires	Installed Watts
L-12	L1	34	According to §130.0(c)	115	3,910
L-13	L2	24	According to §130.0(c)	3	72
L-14	L4	24	According to §130.0(c)	50	1,200
L-15	L6	11	According to §130.0(c)	37	407
L-16	L5	32	According to §130.0(c)	13	416
L-17	L6	11	According to §130.0(c)	12	132
L-18	L7E	40	According to §130.0(c)	1	40
L-19	L7E	40	According to §130.0(c)	1	40
L-2	L3	24	According to §130.0(c)	24	576
L-20	L7E	40	According to §130.0(c)	1	40
L-21	B1	25	According to §130.0(c)	2	50
L-22	L1	34	According to §130.0(c)	60	2,040
L-23	B1	25	According to §130.0(c)	8	200
L-24	L3	24	According to §130.0(c)	18	432

K2. INDOOR CONDITIONED LIGHTING SCHEDULE

Luminaire Schedule (includes all permanent installed lighting in conditioned space, and portable lighting over 0.3 w/ft^2 in offices)

1	2	3	4	5	6
Name or Item Tag	Complete Luminaire Description (i.e., 3-lamp fluorescent troffer, F32T8, one dimmable electronic ballast)	Watts per luminaire	How Wattage is Determined	Total Number Luminaires	Installed Watts
L-25	C1	10	According to §130.0(c)	9	90
L-26	W4	13	According to §130.0(c)	3	39
L-27	C1	10	According to §130.0(c)	9	90
L-28	W4	13	According to §130.0(c)	3	39
L-29	L3	24	According to §130.0(c)	21	504
L-3	L2	24	According to §130.0(c)	2	48
L-30	L2	24	According to §130.0(c)	2	48
L-31	W4	13	According to §130.0(c)	2	26
L-32	L2	24	According to §130.0(c)	2	48
L-33	W4	13	According to §130.0(c)	2	26
L-34	L5	32	According to §130.0(c)	2	64
L-35	L5	32	According to §130.0(c)	2	64
L-36	L7E	40	According to §130.0(c)	1	40
L-37	B1	25	According to §130.0(c)	2	50

K2. INDOOR CONDITIONED LIGHTING SCHEDULE

Luminaire Schedule (includes all permanent installed lighting in conditioned space, and portable lighting over 0.3 w/ft^2 in offices)

1	2	3	4	5	6
Name or Item Tag	Complete Luminaire Description (i.e., 3-lamp fluorescent troffer, F32T8, one dimmable electronic ballast)	Watts per luminaire	How Wattage is Determined	Total Number Luminaires	Installed Watts
L-38	L5	32	According to §130.0(c)	2	64
L-39	L5	32	According to §130.0(c)	2	64
L-4	W4	13	According to §130.0(c)	2	26
L-40	L8	40	According to §130.0(c)	2	80
L-41	L9	32	According to §130.0(c)	5	160
L-42	L8	40	According to §130.0(c)	3	120
L-43	L2	24	According to §130.0(c)	2	48
L-44	W4	13	According to §130.0(c)	2	26
L-45	L1	34	According to §130.0(c)	55	1,870
L-46	B1	25	According to §130.0(c)	4	100
L-47	L1	34	According to §130.0(c)	40	1,360
L-48	B1	25	According to §130.0(c)	2	50
L-49	L1	34	According to §130.0(c)	63	2,142
L-5	L2	24	According to §130.0(c)	2	48

K2. INDOOR CONDITIONED LIGHTING SCHEDULE

Luminaire Schedule (includes all permanent installed lighting in conditioned space, and portable lighting over 0.3 w/ft^2 in offices)

1	2	3	4	5	6
Name or Item Tag	Complete Luminaire Description (i.e., 3-lamp fluorescent troffer, F32T8, one dimmable electronic ballast)	Watts per luminaire	How Wattage is Determined	Total Number Luminaires	Installed Watts
L-50	B1	25	According to §130.0(c)	2	50
L-51	L1	34	According to §130.0(c)	68	2,312
L-52	B1	25	According to §130.0(c)	4	100
L-53	B1	25	According to §130.0(c)	1	25
L-6	W4	13	According to §130.0(c)	2	26
L-7	L7E	40	According to §130.0(c)	1	40
L-8	L7E	40	According to §130.0(c)	1	40
L-9	C2	15	According to §130.0(c)	8	120

K3. INDOOR CONDITIONED LIGHTING CONTROL CREDITS

Lighting Control Credits Schedule (includes all lighting controls installed in conditioned space for compliance credit per §140.6(a)2 and Table 140.6-A)

1	2	3	4	5	6	7	8	9
Area Description	Primary Function Area (must meet requirements of Table 140.6-A)	Type of Lighting Control	Power Adjustment Factor (PAF)	Luminaire Name or Item Tag	Watts per Luminaires	# of Luminaires	Lighting Controlled (Watts)	Control Credit (Watts)
5-3-RESTROOM	Restrooms	NA	0.00 0.00 0.00 0.00 0.00	L-3	48.0	2	48	0

PLOT DATE: 10/30/2022 3:58:50 PM

FOR BID ONLY

Teter, LLP expressly reserves its common law copyright and other property rights in these plans. This document, the ideas and designs incorporated herein, as an instrument of professional service, is not to be used in whole or in part, for any other project without prior written authorization.

MARK	DATE	DESCRIPTION
	11/1/22	DSA BACKCHECK

\\tetr-file11\Users\matt.soderstrom_TETR\Documents\12032-M-COS Tulare CTE_matt.soderstrom.rvt

Project Name:	COS TULARE CTE	NRCC-PRF-01-E	Page 24 of 35
Project Address:	4999 E BARDSLEY AVE TULARE	Calculation Date/Time:	11:46, Thu, Jun 16, 2022
Input File Name:	T24.cibd19x		

K3. INDOOR CONDITIONED LIGHTING CONTROL CREDITS

Lighting Control Credits Schedule (includes all lighting controls installed in conditioned space for compliance credit per §140.6(a)2 and Table 140.6-A)

1	2	3	4	5	6	7	8	9
Area Description	Primary Function Area (must meet requirements of Table 140.6-A)	Type of Lighting Control	Power Adjustment Factor (PAF)	Luminaire Name or Item Tag	Watts per Luminaires	# of Luminaires	Lighting Controlled (Watts)	Control Credit (Watts)
S-3-RESTROOM	Restrooms	NA	0.00 0.00 0.00 0.00 0.00	L-4	26.0	2	26	0
S-4-RESTROOM	Restrooms	NA	0.00 0.00 0.00 0.00 0.00	L-5	48.0	2	48	0
S-4-RESTROOM	Restrooms	NA	0.00 0.00 0.00 0.00 0.00	L-6	26.0	2	26	0
S-29-LACTATION	All other	NA	0.00 0.00 0.00 0.00 0.00	L-32	48.0	2	48	0
S-29-LACTATION	All other	NA	0.00 0.00 0.00 0.00 0.00	L-33	26.0	2	26	0
S-30-OFFICE	Office Area (<250 square feet)	NA	0.00 0.00 0.00 0.00 0.00	L-34	64.0	2	64	0
S-31-OFFICE	Office Area (<250 square feet)	NA	0.00 0.00	L-35	64.0	2	64	0

Project Name:	COS TULARE CTE	NRCC-PRF-01-E	Page 25 of 35
Project Address:	4999 E BARDSLEY AVE TULARE	Calculation Date/Time:	11:46, Thu, Jun 16, 2022
Input File Name:	T24.cibd19x		

K3. INDOOR CONDITIONED LIGHTING CONTROL CREDITS

Lighting Control Credits Schedule (includes all lighting controls installed in conditioned space for compliance credit per §140.6(a)2 and Table 140.6-A)

1	2	3	4	5	6	7	8	9
Area Description	Primary Function Area (must meet requirements of Table 140.6-A)	Type of Lighting Control	Power Adjustment Factor (PAF)	Luminaire Name or Item Tag	Watts per Luminaires	# of Luminaires	Lighting Controlled (Watts)	Control Credit (Watts)
			0.00 0.00 0.00					
S-32-OFFICE	Office Area (<250 square feet)	NA	0.00 0.00 0.00 0.00 0.00	L-36	40.0	1	40	0
S-33-COMM	Electrical, Mechanical, Telephone Rooms	NA	0.00 0.00 0.00 0.00 0.00	L-37	50.0	2	50	0
S-35-OFFICE	Office Area (<250 square feet)	NA	0.00 0.00 0.00 0.00 0.00	L-38	64.0	2	64	0
S-36-OFFICE	Office Area (<250 square feet)	NA	0.00 0.00 0.00 0.00 0.00	L-39	64.0	2	64	0
S-37-OFFICE	Office Area (<250 square feet)	NA	0.00 0.00 0.00 0.00 0.00	L-40	80.0	2	80	0
S-38-OFFICE	Office Area (<250 square feet)	NA	0.00 0.00 0.00 0.00 0.00	L-41	160.0	5	160	0

Project Name:	COS TULARE CTE	NRCC-PRF-01-E	Page 26 of 35
Project Address:	4999 E BARDSLEY AVE TULARE	Calculation Date/Time:	11:46, Thu, Jun 16, 2022
Input File Name:	T24.cibd19x		

K3. INDOOR CONDITIONED LIGHTING CONTROL CREDITS

Lighting Control Credits Schedule (includes all lighting controls installed in conditioned space for compliance credit per §140.6(a)2 and Table 140.6-A)

1	2	3	4	5	6	7	8	9
Area Description	Primary Function Area (must meet requirements of Table 140.6-A)	Type of Lighting Control	Power Adjustment Factor (PAF)	Luminaire Name or Item Tag	Watts per Luminaires	# of Luminaires	Lighting Controlled (Watts)	Control Credit (Watts)
			0.00					
S-39-CONFERENCE	Convention, Conference, Multipurpose and Meeting Area	NA	0.00 0.00 0.00 0.00 0.00	L-42	120.0	3	120	0
S-5-OFFICE	Office Area (<250 square feet)	NA	0.00 0.00 0.00 0.00 0.00	L-7	40.0	1	40	0
S-6-OFFICE	Office Area (<250 square feet)	NA	0.00 0.00 0.00 0.00 0.00	L-8	40.0	1	40	0
S-8-COMM	Electrical, Mechanical, Telephone Rooms	NA	0.00 0.00 0.00 0.00 0.00	L-11	50.0	2	50	0
S-15-OFFICE	Office Area (<250 square feet)	NA	0.00 0.00 0.00 0.00 0.00	L-18	40.0	1	40	0
S-16-OFFICE	Office Area (<250 square feet)	NA	0.00 0.00 0.00 0.00 0.00	L-19	40.0	1	40	0
S-17-OFFICE	Office Area (<250 square feet)	NA	0.00	L-20	40.0	1	40	0

Project Name:	COS TULARE CTE	NRCC-PRF-01-E	Page 27 of 35
Project Address:	4999 E BARDSLEY AVE TULARE	Calculation Date/Time:	11:46, Thu, Jun 16, 2022
Input File Name:	T24.cibd19x		

K3. INDOOR CONDITIONED LIGHTING CONTROL CREDITS

Lighting Control Credits Schedule (includes all lighting controls installed in conditioned space for compliance credit per §140.6(a)2 and Table 140.6-A)

1	2	3	4	5	6	7	8	9
Area Description	Primary Function Area (must meet requirements of Table 140.6-A)	Type of Lighting Control	Power Adjustment Factor (PAF)	Luminaire Name or Item Tag	Watts per Luminaires	# of Luminaires	Lighting Controlled (Watts)	Control Credit (Watts)
			0.00 0.00 0.00 0.00 0.00					
S-18-COMM	Electrical, Mechanical, Telephone Rooms	NA	0.00 0.00 0.00 0.00 0.00	L-21	50.0	2	50	0
S-28-RESTROOM	Restrooms	NA	0.00 0.00 0.00 0.00 0.00	L-30	48.0	2	48	0
S-28-RESTROOM	Restrooms	NA	0.00 0.00 0.00 0.00 0.00	L-31	26.0	2	26	0
S-40-RESTROOM	Restrooms	NA	0.00 0.00 0.00 0.00 0.00	L-43	48.0	2	48	0
S-40-RESTROOM	Restrooms	NA	0.00 0.00 0.00 0.00 0.00	L-44	26.0	2	26	0
S-1-COMPUTER LAB	Classroom, Lecture, Training, Vocational Areas	NA	0.00 0.00 0.00	L-1	576.0	24	576	0

Project Name:	COS TULARE CTE	NRCC-PRF-01-E	Page 28 of 35
Project Address:	4999 E BARDSLEY AVE TULARE	Calculation Date/Time:	11:46, Thu, Jun 16, 2022
Input File Name:	T24.cibd19x		

K3. INDOOR CONDITIONED LIGHTING CONTROL CREDITS

Lighting Control Credits Schedule (includes all lighting controls installed in conditioned space for compliance credit per §140.6(a)2 and Table 140.6-A)

1	2	3	4	5	6	7	8	9
Area Description	Primary Function Area (must meet requirements of Table 140.6-A)	Type of Lighting Control	Power Adjustment Factor (PAF)	Luminaire Name or Item Tag	Watts per Luminaires	# of Luminaires	Lighting Controlled (Watts)	Control Credit (Watts)
			0.00 0.00 0.00 0.00 0.00					
S-2-COMPUTER LAB	Classroom, Lecture, Training, Vocational Areas	NA	0.00 0.00 0.00 0.00 0.00	L-2	576.0	24	576	0
S-7-AUTO SHOP STORAGE	Classroom, Lecture, Training, Vocational Areas	NA	0.00 0.00 0.00 0.00 0.00	L-9	120.0	8	120	0
S-7-AUTO SHOP STORAGE	Classroom, Lecture, Training, Vocational Areas	NA	0.00 0.00 0.00 0.00 0.00	L-10	153.0	1	153	0
S-10-AUTO SHOP	Classroom, Lecture, Training, Vocational Areas	NA	0.00 0.00 0.00 0.00 0.00	L-12	3910.0	115	3910	0
S-10-AUTO SHOP	Classroom, Lecture, Training, Vocational Areas	NA	0.00 0.00 0.00 0.00 0.00	L-13	72.0	3	72	0
S-13-WORKSHOP	Classroom, Lecture, Training, Vocational Areas	NA	0.00 0.00 0.00 0.00 0.00	L-14	1200.0	50	1200	0

Project Name:	COS TULARE CTE	NRCC-PRF-01-E	Page 29 of 35
Project Address:	4999 E BARDSLEY AVE TULARE	Calculation Date/Time:	11:46, Thu, Jun 16, 2022
Input File Name:	T24.cibd19x		

K3. INDOOR CONDITIONED LIGHTING CONTROL CREDITS

Lighting Control Credits Schedule (includes all lighting controls installed in conditioned space for compliance credit per §140.6(a)2 and Table 140.6-A)

1	2	3	4	5	6	7	8	9
Area Description	Primary Function Area (must meet requirements of Table 140.6-A)	Type of Lighting Control	Power Adjustment Factor (PAF)	Luminaire Name or Item Tag	Watts per Luminaires	# of Luminaires	Lighting Controlled (Watts)	Control Credit (Watts)
S-13-WORKSHOP	Classroom, Lecture, Training, Vocational Areas	NA	0.00 0.00 0.00 0.00 0.00	L-15	407.0	37	407	0
S-14-WORKSHOP	Classroom, Lecture, Training, Vocational Areas	NA	0.00 0.00 0.00 0.00 0.00	L-16	416.0	13	416	0
S-14-WORKSHOP	Classroom, Lecture, Training, Vocational Areas	NA	0.00 0.00 0.00 0.00 0.00	L-17	132.0	12	132	0
S-20-AG MECHANICS	Classroom, Lecture, Training, Vocational Areas	NA	0.00 0.00 0.00 0.00 0.00	L-22	2040.0	60	2040	0
S-21-AG MECHANICS STORAGE	Classroom, Lecture, Training, Vocational Areas	NA	0.00 0.00 0.00 0.00 0.00	L-23	200.0	8	200	0
S-24-CLASSROOM	Classroom, Lecture, Training, Vocational Areas	NA	0.00 0.00 0.00 0.00 0.00	L-24	432.0	18	432	0
S-25-RESTROOM	Restrooms	NA	0.00 0.00	L-25	90.0	9	90	0

Project Name:	COS TULARE CTE	NRCC-PRF-01-E	Page 30 of 35
Project Address:	4999 E BARDSLEY AVE TULARE	Calculation Date/Time:	11:46, Thu, Jun 16, 2022
Input File Name:	T24.cibd19x		

K3. INDOOR CONDITIONED LIGHTING CONTROL CREDITS

Lighting Control Credits Schedule (includes all lighting controls installed in conditioned space for compliance credit per §140.6(a)2 and Table 140.6-A)

1	2	3	4	5	6	7	8	9
Area Description	Primary Function Area (must meet requirements of Table 140.6-A)	Type of Lighting Control	Power Adjustment Factor (PAF)	Luminaire Name or Item Tag	Watts per Luminaires	# of Luminaires	Lighting Controlled (Watts)	Control Credit (Watts)
			0.00 0.00 0.00					
S-25-RESTROOM	Restrooms	NA	0.00 0.00 0.00 0.00 0.00	L-26	39.0	3	39	0
S-25-RESTROOM	Restrooms	NA	0.00 0.00 0.00 0.00 0.00	L-27	90.0	9	90	0
S-25-RESTROOM	Restrooms	NA	0.00 0.00 0.00 0.00 0.00	L-28	39.0	3	39	0
S-26-CLASSROOM	Classroom, Lecture, Training, Vocational Areas	NA	0.00 0.00 0.00 0.00 0.00	L-29	504.0	21	504	0
S-41-WORKSHOP	Classroom, Lecture, Training, Vocational Areas	NA	0.00 0.00 0.00 0.00 0.00	L-45	1870.0	55	1870	0
S-42-WORKSHOP STORAGE	Classroom, Lecture, Training, Vocational Areas	NA	0.00 0.00 0.00 0.00 0.00	L-46	100.0	4	100	0

Project Name:	COS TULARE CTE	NRCC-PRF-01-E	Page 31 of 35
Project Address:	4999 E BARDSLEY AVE TULARE	Calculation Date/Time:	11:46, Thu, Jun 16, 2022
Input File Name:	T24.cibd19x		

K3. INDOOR CONDITIONED LIGHTING CONTROL CREDITS

Lighting Control Credits Schedule (includes all lighting controls installed in conditioned space for compliance credit per §140.6(a)2 and Table 140.6-A)

1	2	3	4	5	6	7	8	9
Area Description	Primary Function Area (must meet requirements of Table 140.6-A)	Type of Lighting Control	Power Adjustment Factor (PAF)	Luminaire Name or Item Tag	Watts per Luminaires	# of Luminaires	Lighting Controlled (Watts)	Control Credit (Watts)
			0.00					
S-43-ELECTRICIAN	Classroom, Lecture, Training, Vocational Areas	NA	0.00 0.00 0.00 0.00 0.00	L-47	1360.0	40	1360	0
S-43-ELECTRICIAN	Classroom, Lecture, Training, Vocational Areas	NA	0.00 0.00 0.00 0.00 0.00	L-48	50.0	2	50	0
S-44-ENVIRONMENTAL 2.0	Classroom, Lecture, Training, Vocational Areas	NA	0.00 0.00 0.00 0.00 0.00	L-49	2142.0	63	2142	0
S-44-ENVIRONMENTAL 2.0	Classroom, Lecture, Training, Vocational Areas	NA	0.00 0.00 0.00 0.00 0.00	L-50	50.0	2	50	0
S-45-INDUSTRIAL MAINTENANCE 2.	Classroom, Lecture, Training, Vocational Areas	NA	0.00 0.00 0.00 0.00 0.00	L-51	2312.0	68	2312	0
S-45-INDUSTRIAL MAINTENANCE 2.	Classroom, Lecture, Training, Vocational Areas	NA	0.00 0.00 0.00 0.00 0.00	L-52	100.0	4	100	0

Project Name:	COS TULARE CTE	NRCC-PRF-01-E	Page 32 of 35
Project Address:	4999 E BARDSLEY AVE TULARE	Calculation Date/Time:	11:46, Thu, Jun 16, 2022
Input File Name:	T24.cibd19x		

K3. INDOOR CONDITIONED LIGHTING CONTROL CREDITS

Lighting Control Credits Schedule (includes all lighting controls installed in conditioned space for compliance credit per §140.6(a)2 and Table 140.6-A)

1	2	3	4	5	6	7	8	9
Area Description	Primary Function Area (must meet requirements of Table 140.6-A)	Type of Lighting Control	Power Adjustment Factor (PAF)	Luminaire Name or Item Tag	Watts per Luminaires	# of Luminaires	Lighting Controlled (Watts)	Control Credit (Watts)
S-45-INDUSTRIAL MAINTENANCE 2.	Classroom, Lecture, Training, Vocational Areas	NA	0.00 0.00 0.00 0.00 0.00	L-53	25.0	1	25	0

K4. INDOOR CONDITIONED LIGHTING MANDATORY LIGHTING CONTROLS

Building Level Controls

1	2
Mandatory Demand Response §110.12(c)	**Shut-Off Controls §130.1(c)**
Required	Required

Area Level Controls (includes all lighting controls installed in conditioned space to meet mandatory requirements per §130.1)

4	5	6	7	8	9	10
Area Description	**Area Category Primary Function Area**	**Area Controls 130.1(a)**	**Multi-Level Controls 130.1(b)**	**Shut-Off Controls 130.1(c)**	**Primary Daylighting 130.1(d)**	**Secondary Daylighting 140.5(d)**

Project Name:	COS TULARE CTE	NRCC-PRF-01-E	Page 33 of 35
Project Address:	4999 E BARDSLEY AVE TULARE	Calculation Date/Time:	11:46, Thu, Jun 16, 2022
Input File Name:	T24.cibd19x		

L. DECLARATION OF REQUIRED CERTIFICATES OF INSTALLATION

Table Instructions: Selections shall be made by Documentation Author to indicate which Certificates of Installation must be submitted for the features to be recognized for compliance. These documents bust be retained and provided to the building inspector during construction and can be found online at: https://www.energy.ca.gov/title24/2019standards/2019_compliance_documents/Nonresidential_Documents/NRCI/

Building Component	Form/Title
Envelope	NRCI-ENV-01-E - Must be submitted for all buildings
Mechanical	NRCI-MCH-01-E - Must be submitted for all buildings
Plumbing	NRCI-PLB-01-E - Must be submitted for all buildings
Indoor Lighting	NRCI-LTI-01-E - Must be submitted for all buildings

Project Name:	COS TULARE CTE	NRCC-PRF-01-E	Page 34 of 35
Project Address:	4999 E BARDSLEY AVE TULARE	Calculation Date/Time:	11:46, Thu, Jun 16, 2022
Input File Name:	T24.cibd19x		

M. DECLARATION OF REQUIRED CERTIFICATES OF ACCEPTANCE

Table Instructions: Selections shall be made by Documentation Author to indicate which Certificates of Acceptance must be submitted for the features to be recognized for compliance. These documents must be provided to the building inspector during construction and must be completed through an Acceptance Test Technician Certification Provider (ATTCP). For more information visit:https://www.energy.ca.gov/title24/2019standards/2019_compliance_documents/Nonresidential_Documents/NRCA/

Building Component	Form/Title
Envelope	NRCA-ENV-02-F - NRFC label verification for fenestration
Indoor Lighting	NRCA-LTI-02-A - Occupancy Sensors and Automatic Time Switch Controls
	NRCA-LTI-04-A - Demand Responsive Lighting Controls
Mechanical	NRCA-MCH-02-A Outdoor Air must be submitted for all newly installed HVAC units. Note: MCH02-A can be performed in conjunction with MCH-07-A Supply Fan VFD Acceptance (if applicable) since testing activities overlap
	NRCA-MCH-03-A Constant Volume Single Zone HVAC
	NRCA-MCH-05-A Air Economizer Controls
	NRCA-MCH-06-A Demand Control Ventilation Systems Acceptance must be submitted for all systems required to employ demand controlled ventilation (refer to §120.1(c)3) can vary outside ventilation flow rates based on maintaining interior carbon dioxide (CO2) concentration setpoints
	NRCA-MCH-11-A Automatic Demand Shed Controls
	NRCA-MCH-12-A FDD for Packaged Direct Expansion Units
	NRCA-MCH-13-A Automatic FDD for Air Handling Units and Zone Terminal Units Acceptance

Project Name:	COS TULARE CTE	NRCC-PRF-01-E	Page 35 of 35
Project Address:	4999 E BARDSLEY AVE TULARE	Calculation Date/Time:	11:46, Thu, Jun 16, 2022
Input File Name:	T24.cibd19x		

DOCUMENTATION AUTHOR'S DECLARATION STATEMENT

I certify that this Certificate of Compliance documentation is accurate and complete.

Documentation Author Name:	Signature:
Company: Teter Architects & Engineers	
Address:	Signature Date: 2022-06-16
City/State/Zip:	CEA/ HERS Certification Identification (if applicable):
Phone:	

RESPONSIBLE PERSON'S DECLARATION STATEMENT

I certify the following under penalty of perjury, under the laws of the State of California:
1. The information provided on this Certificate of Compliance is true and correct.
2. I am eligible under Division 3 of the Business and Professions Code to accept responsibility for the building design or system design identified on this Certificate of Compliance (responsible designer)
3. The energy features and performance specifications, materials, components, and manufactured devices for the building design or system design identified on this Certificate of Compliance conform to the requirements of Title 24, Part 1 and Part 6 of the California Code of Regulations.
4. The building design features or system design features identified on this Certificate of Compliance are consistent with the information provided on other applicable compliance documents, worksheets, calculations, plans and specifications submitted to the enforcement agency for approval with this building permit application.
5. I will ensure that a completed signed copy of this Certificate of Compliance shall be made available with the building permit(s) issued for the building, and made available to the enforcement agency for all applicable inspections. I understand that a completed signed copy of this Certificate of Compliance is required to be included with the documentation the builder provides to the building owner at occupancy.

Responsible Envelope Designer Name:	Signature:	
Company:		
Address:	Date Signed:	
City/State/Zip:		
Phone:	Title:	License #:
Responsible Lighting Designer Name:	Signature:	
Company:		
Address:	Date Signed:	
City/State/Zip:		
Phone:	Title:	License #:
Responsible Mechanical Designer Name: STEVEN JONES	Signature:	
Company: TETER		
Address: 7535 N PALM AVE SUITE 201	Date Signed: 6/16/2022	
City/State/Zip: FRESNO CA 93711		
Phone: 559-437-0887	Title: MECHANICAL ENGINEER	License #: M32797

PLOT DATE: 10/30/2022 3:58:51 PM

FOR BID ONLY

Teter, LLP expressly reserves its common law copyright and other property rights in these plans. This document, the ideas and designs incorporated herein, as an instrument of professional service, is not to be used in whole or in part, for any other project without prior written authorization.

MARK	DATE	DESCRIPTION
	11/1/22	DSA BACKCHECK

TETER, LLP
FRESNO HEADQUARTERS
VISALIA | BAKERSFIELD | MODESTO | SAN LUIS OBISPO
ARCHITECTS ENGINEERS CONNECTED

TULARE CAMPUS CTE
COLLEGE OF THE SEQUOIAS
4999 E. BARDSLEY AVE.
TULARE, CA

DRAWING TITLE
TITLE 24 DOCUMENTATION

PROJECT NO.
21-12032

DRAWING
M902

\\tetr-file1\Users\matt.soderstrom_TETR\Documents\12032-M-COS Tulare CTE_matt.soderstrom.rvt

STATE OF CALIFORNIA
Domestic Water Heating System
NRCC-PLB-E — CALIFORNIA ENERGY COMMISSION

CERTIFICATE OF COMPLIANCE			NRCC-PLB-E
Project Name:	COS TULARE CTE	Report Page:	(Page 1 of 6)
Project Address:	4999 E BARDSLEY AVE	Date Prepared:	6/16/2022

This document is used to demonstrate compliance for nonresidential occupancies with requirements in §110.1, §110.3, §120.3, and §140.5, and with requirements in §141.0 for additions and alterations, for domestic water heating scopes using the prescriptive path. For high-rise residential and hotel/motel occupancies compliance is demonstrated with requirements in §110.1, §110.3, §120.3, §150.0, and §150.1(c)8, and with requirements §150.2 for additions.

A. GENERAL INFORMATION

01	Project Location (city)	TULARE	02	Climate Zone	13
03	Occupancy Types Within Project (select all that apply):				
☒ Nonresidential	☐ High-Rise Residential	☐ Hotel/Motel			
☐ State Building	☐ Healthcare Facility	☐ Other (Write In)			

B. PROJECT SCOPE

This table includes domestic water heating systems that are within the scope of the permit application and are demonstrating compliance using the prescriptive paths outlined in §140.5, §150.1(c)8, and §141.0(a), or §141.0(b)2N for additions or alterations. Solar water heating systems are documented on the NRCC-SRA compliance document. Combined hydronic water heating systems are documented on the NRCC-ACH compliance document.

01	02	03
My project consists of (check all that apply):	System Type[1,2]	System Components
☒ New system (DHW system being installed for the first time in newly constructed building)	Individual System (serving nonresidential spaces)	☒ Equipment ☒ Distribution ☒ Controls
☒ New system (DHW system being installed for the first time in newly constructed building)	Individual System (serving nonresidential spaces)	☒ Equipment ☒ Distribution ☒ Controls
☐ System Alteration (equipment, distribution or controls)		☐ Equipment ☐ Distribution ☐ Controls

[1] FOOTNOTES: Point of use water heaters, or other non-central systems used to serve nonresidential spaces, are considered individual systems.

[2] Dwelling units refers to hotel/motel guest rooms and units in a high-rise residential occupancy.

STATE OF CALIFORNIA
Domestic Water Heating System
NRCC-PLB-E — CALIFORNIA ENERGY COMMISSION

CERTIFICATE OF COMPLIANCE			NRCC-PLB-E
Project Name:	COS TULARE CTE	Report Page:	(Page 2 of 6)
Project Address:	4999 E BARDSLEY AVE	Date Prepared:	6/16/2022

C. COMPLIANCE RESULTS

Table C will indicate if the project data input into the compliance document is compliant with water heating requirements. If this table says "DOES NOT COMPLY" or "COMPLIES with Exceptional Conditions" refer to Table D. or the table indicated as not compliant for guidance.

01	02	03	04
Domestic Hot Water Equipment	Distribution Systems	Controls	Compliance Results
Table F	Table G	Table H	
Yes	Yes	Yes	COMPLIES

D. EXCEPTIONAL CONDITIONS

This table is auto-filled with uneditable comments because of selections made or data entered in tables throughout the form.

E. ADDITIONAL REMARKS

This table is includes remarks made by the permit applicant to the Authority Having Jurisdiction.

STATE OF CALIFORNIA
Domestic Water Heating System
NRCC-PLB-E — CALIFORNIA ENERGY COMMISSION

CERTIFICATE OF COMPLIANCE			NRCC-PLB-E
Project Name:	COS TULARE CTE	Report Page:	(Page 3 of 6)
Project Address:	4999 E BARDSLEY AVE	Date Prepared:	6/16/2022

F. DOMESTIC HOT WATER EQUIPMENT

This table is used to demonstrate compliance with mandatory equipment requirements in §110.1 and §110.3. For high-rise residential and hotel/motel occupancies, compliance with prescriptive requirements in §150.1(c)8 must also be demonstrated and with §150.2 for addition and alteration scopes.

Equipment Schedule: Individual Systems

01	02	03	04	05	06
Name or Item Tag	Equipment Type	Volume (gal)	Max GPM/ First Hour Rating (FHR)	Rated Uniform Energy Factor (UEF)	Minimum Required Uniform Energy Factor (UEF)[1]
Navien NPE-240A2	Gas-Fired Instantaneous (50,000-200,000 BTUH)	<=2	GPM >= 4.0	0.95	0.81
A. O. SMITH #BTXL-100 CYCLONE XI	Residential-Duty Commercial Gas-Fired Storage (75,000-105,000 BTUH)	61-75	0 <= GPM <1.7	0.62	0.2

[1] FOOTNOTE: Compliant equipment may be found in the Modernized Appliance Efficiency Database System (MAEDBS) on the Energy Commission website: https://cacertappliances.energy.ca.gov/Pages/Search/AdvancedSearch.aspx

Water Heating Equipment All Occupancies

	Yes	No	Not Applicable	Requirement
18	☐	☐	☒	Unfired storage tank insulation shall have Internal + External >=R-16 OR External >=R-12. Label required per §110.3(c)3
19	☐	☐	☒	New state buildings 60% of energy for service water heating from site solar energy or recovered energy per §110.3(c)5
20	☐	☐	☒	Isolation valves for instantaneous water heater with input rating >6.8 kBTUH or 2 kW has been specified per §110.3(c)6

Registration Number: — Registration Date/Time: — Registration Provider: Energysoft
CA Building Energy Efficiency Standards - 2019 Nonresidential Compliance — Report Version: 2019.1.003 Schema Version: rev 20200601 — Report Generated: 2022-06-16 15:19:24

STATE OF CALIFORNIA
Domestic Water Heating System
NRCC-PLB-E — CALIFORNIA ENERGY COMMISSION

CERTIFICATE OF COMPLIANCE			NRCC-PLB-E
Project Name:	COS TULARE CTE	Report Page:	(Page 4 of 6)
Project Address:	4999 E BARDSLEY AVE	Date Prepared:	6/16/2022

G. DOMESTIC HOT WATER DISTRIBUTION SYSTEM

This table is used to demonstrate compliance for nonresidential occupancies with distribution requirements in §120.3 and §140.5. For high-rise residential and hotel/motel occupancies, compliance is demonstrated with requirements §110.3(c), §120.3, §150.0, §150.1

Mandatory Pipe Insulation All Occupancies

12	☒	For systems serving nonresidential spaces, pipe insulation for the following applications is specified to comply with Table 120.3-A (see below) per §120.3 : • Recirculating system piping, including supply and return piping of the water heater • The first 8 ft of hot and cold outlet piping, including between storage tank and heat trap, for a nonrecirculating storage system • Pipes that are externally heated
13	☒	Insulation shall be protected from damage, including that due to sunlight, moisture, equipment maintenance, and wind. Insulation exposed to weather shall be installed with a cover suitable for outdoor service per §120.3(h) and §150.0(i)3

TABLE 120.3-A PIPE INSULATION THICKNESS

Fluid Temperature Range (°F)	Conductivity Range (Btu-in per hour per ft² per °F)	Insulation Mean Rating Temp (°F)	Nominal Pipe Diameter (in)		
			< 1	1 to < 1.5	1.5 to < 4
			Minimum Insulation Required		
105-140	0.22 - 0.28	100	1.0 in or R-7.7	1.5 in or R-12.5	1.5 in or R-11

Registration Number: — Registration Date/Time: — Registration Provider: Energysoft
CA Building Energy Efficiency Standards - 2019 Nonresidential Compliance — Report Version: 2019.1.003 Schema Version: rev 20200601 — Report Generated: 2022-06-16 15:19:24

STATE OF CALIFORNIA
Domestic Water Heating System
NRCC-PLB-E — CALIFORNIA ENERGY COMMISSION

CERTIFICATE OF COMPLIANCE			NRCC-PLB-E
Project Name:	COS TULARE CTE	Report Page:	(Page 5 of 6)
Project Address:	4999 E BARDSLEY AVE	Date Prepared:	6/16/2022

H. DOMESTIC HOT WATER CONTROLS

This table is used to demonstrate compliance with control requirements in §110.3 for all occupancies. For high-rise residential and hotel/motel occupancies, compliance is also demonstrated with requirements in §150.1(c)8.

	Yes	No	Not Applicable	Requirement
01	☒	☐	☐	Construction documents require manufacturer certification that service water-heating systems are equipped with automatic temperature controls capable of adjusting temperature settings per §110.3(a).
02	☐	☐	☒	Systems with capacity > 167,000 BTUH equipped with outlet temperature controls per §110.3(c)1 unless covered by California Plumbing Code §13.0.
03	☐	☐	☒	Controls for circulating pumps or electrical heat trace systems are capable of automatically turning off the system per §110.3(c)2 unless systems serves healthcare facility.
04	☐	☐	☒	For recirculation systems serving multiple dwelling units, design includes automatic pump controls per §150.1(c)8Bii, or §150.2 for additions or alterations.
05	☐	☐	☒	For recirculation systems serving individual dwelling units, design includes manual on/off controls as specified in Reference Appendix RA4.4.9 per §150.1(c)8.
06	☐	☐	☒	For replacement single heat pump water heaters serving individual dwelling units in climate zone 1-15, design includes communication interface that meets demand responsive control requirements of §110.12(a) per §150.0(k)1Hii.

I. DECLARATION OF REQUIRED CERTIFICATES OF INSTALLATION

Selections have been made based on information provided in this document. If any selection have been changed by permit applicant, an explanation should be included in Table E. Additional Remarks. These documents must be provided to the building inspector during construction and can be found online at https://www.energy.ca.gov/title24/2019standards/2019_compliance_documents/Nonresidential_Documents/NRCI/

Form/Title	Field Inspector	
	Pass	Fail
NRCI-PLB-01-E - Must be submitted for all buildings	☐	☐

J.DECLARATION OF REQUIRED CERTIFICATES OF ACCEPTANCE

There are no Certificates of Acceptance applicable to service water heating requirements.

K. DECLARATION OF REQUIRED CERTIFICATES OF VERIFICATION

There are no NRCV forms required for this project.

Registration Number: — Registration Date/Time: — Registration Provider: Energysoft
CA Building Energy Efficiency Standards - 2019 Nonresidential Compliance — Report Version: 2019.1.003 Schema Version: rev 20200601 — Report Generated: 2022-06-16 15:19:24

STATE OF CALIFORNIA
Domestic Water Heating System
NRCC-PLB-E — CALIFORNIA ENERGY COMMISSION

CERTIFICATE OF COMPLIANCE			NRCC-PLB-E
Project Name:	COS TULARE CTE	Report Page:	(Page 6 of 6)
Project Address:	4999 E BARDSLEY AVE	Date Prepared:	6/16/2022

DOCUMENTATION AUTHOR'S DECLARATION STATEMENT

I certify that this Certificate of Compliance documentation is accurate and complete.

Documentation Author Name:	Documentation Author Signature:
Company: Teter Architects & Engineers	Signature Date:
Address:	CEA/ HERS Certification Identification (if applicable):
City/State/Zip:	Phone:

RESPONSIBLE PERSON'S DECLARATION STATEMENT

I certify the following under penalty of perjury, under the laws of the State of California:

1. The information provided on this Certificate of Compliance is true and correct.
2. I am eligible under Division 3 of the Business and Professions Code to accept responsibility for the building design or system design identified on this Certificate of Compliance (responsible designer)
3. The energy features and performance specifications, materials, components, and manufactured devices for the building design or system design identified on this Certificate of Compliance conform to the requirements of Title 24, Part 1 and Part 6 of the California Code of Regulations.
4. The building design features or system design features identified on this Certificate of Compliance are consistent with the information provided on other applicable compliance documents, worksheets, calculations, plans and specifications submitted to the enforcement agency for approval with this building permit application.
5. I will ensure that a completed signed copy of this Certificate of Compliance shall be made available with the building permit(s) issued for the building, and made available to the enforcement agency for all applicable inspections. I understand that a completed signed copy of this Certificate of Compliance is required to be included with the documentation the builder provides to the building owner at occupancy.

Responsible Designer Name:	Responsible Designer Signature:
STEVEN JONES	
Company: TETER	Date Signed: 2022-06-16
Address: 7535 N PALM AVE SUITE 201	License: M32797
City/State/Zip: FRESNO CA 93711	Phone: 559-437-0887

PLOT DATE: 10/30/2022 3:58:52 PM

FOR BID ONLY

Teter, LLP expressly reserves its common law copyright and other property rights in these plans. This document, the ideas and designs incorporated herein, as an instrument of professional service, is not to be used in whole or part, for any other project without prior written authorization.

MARK	DATE	DESCRIPTION
	11/1/22	DSA BACKCHECK

TETER, LLP
FRESNO HEADQUARTERS
VISALIA | BAKERSFIELD | MODESTO | SAN LUIS OBISPO
ARCHITECTS ENGINEERS CONSULTANTS

TULARE CAMPUS CTE
COLLEGE OF THE SEQUOIAS
4999 E. BARDSLEY AVE.
TULARE, CA

DRAWING TITLE
TITLE 24 DOCUMENTATION

PROJECT NO.
21-12032

DRAWING
M903

\\tet-file1\Users\corey.stone\Documents\12032-E-COS Tulare CTE_corey.stone.rvt

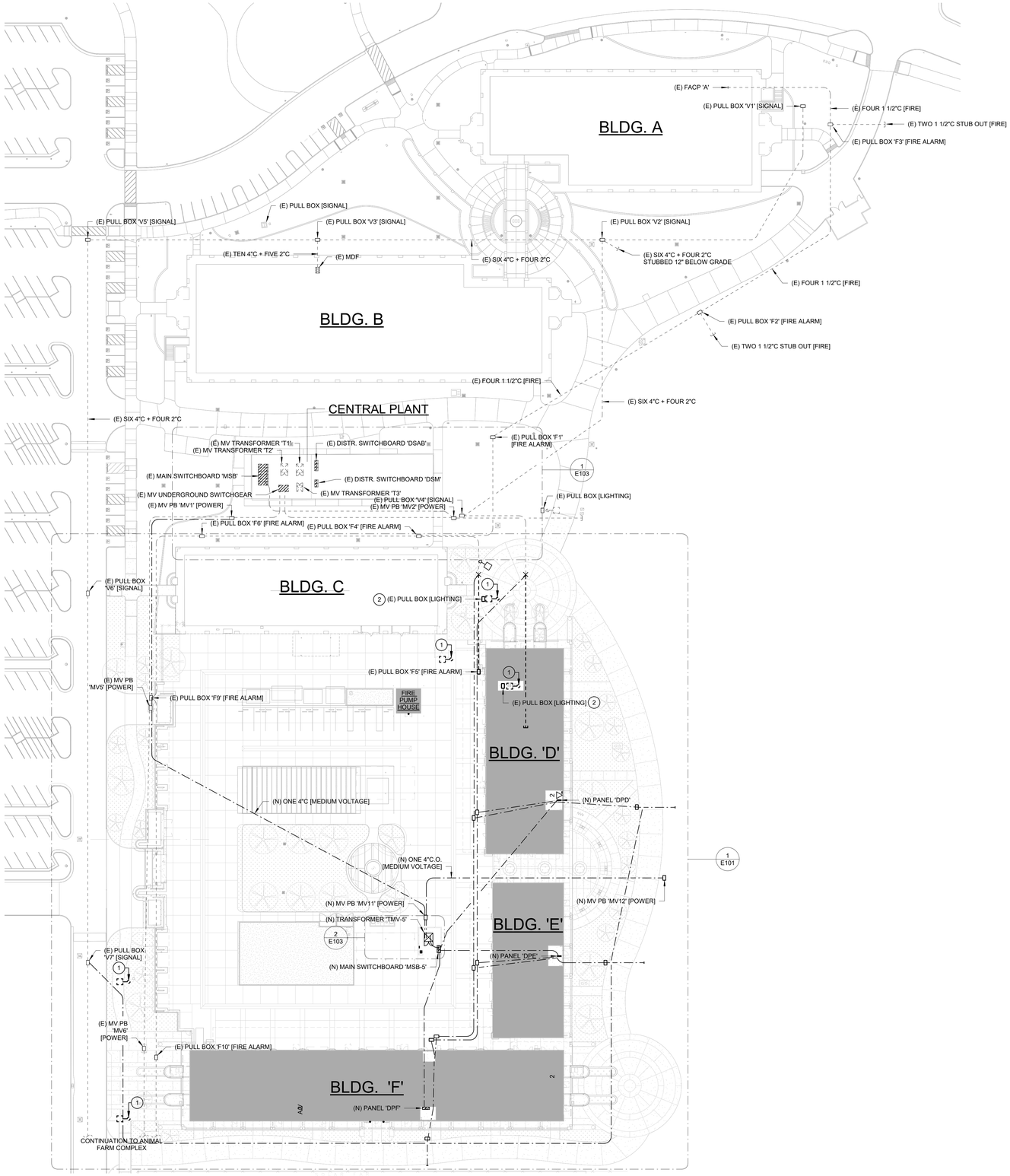

KEYNOTES

1. DEMOLISH (E) SITE LIGHTING AND RETURN TO OWNER. DEMOLISH SITE LIGHTING BRANCH CIRCUIT BACK TO LAST REMAINING FIXTURE.
2. DEMOLISH (E) LIGHTING PULL BOX.

GENERAL NOTES

A. ELECTRICAL FACILITIES SHOWN DASHED ARE EXISTING:
   a. THOSE SHOWN LIGHTWEIGHT (FADED) ARE EXISTING TO REMAIN OR REQUIRE MODIFICATION AS NOTED.
   b. THOSE SHOWN HEAVYWEIGHT (DARK) REQUIRE REMOVAL AS NOTED.

B. EXISTING ELECTRICAL FACILITIES AND CIRCUITING SHOWN ARE BASED ON LIMITED RECORD DRAWINGS AND LIMITED SITE VISITS. THE DRAWINGS MAY NOT ACCURATELY REPRESENT ACTUAL EXISTING CONDITIONS IN THE FIELD. THE CONTRACTOR SHALL FIELD VERIFY ALL EXISTING CONDITIONS AND RING OUT EXISTING CIRCUITS TO DETERMINE EXACT ROUTING.

C. PROVIDE ELECTRICAL FEEDERS PER SINGLE LINE DIAGRAM ON DRAWING E700.

D. PROVIDE PULLBOXES PER DETAILS 1/E600, 6/E600 AND 28/E600.

E. MEDIUM VOLTAGE CONDUITS SHALL BE INSTALLED PER DETAIL 12/E600, ALL OTHER SITE CONDUITS SHALL BE INSTALLED A MINIMUM OF 48" BELOW FINAL GRADE TO TOP OF CONDUIT.

F. SPECIAL PRECAUTION SHALL BE TAKEN WHEN TRENCHING TO LOCATE, PROTECT AND PRESERVE EXISTING UNDERGROUND UTILITIES. ANY DAMAGE CAUSED DURING THE COURSE OF CONSTRUCTION SHALL BE IMMEDIATELY REPAIRED.

NORTH

OVERALL ELECTRICAL SITE PLAN

1" = 40'-0" | 1

PLOT DATE: 11/2/2022 9:49:51 AM

FOR BID ONLY

Teter, LLP expressly reserves its common law copyright and other property rights in these plans. This document, the ideas and designs incorporated herein, as an instrument of professional service, is not to be used in whole or part, for any other project without prior written authorization.

MARK	DATE	DESCRIPTION
	11/1/22	DSA BACKCHECK

TETER, LLP
ARCHITECTS ENGINEERS CONNECTED
FRESNO HEADQUARTERS
VISALIA | BAKERSFIELD | MODESTO | SAN LUIS OBISPO

TULARE CAMPUS CTE
COLLEGE OF THE SEQUOIAS
4999 E. BARDSLEY AVE.
TULARE, CA

DRAWING TITLE
OVERALL ELECTRICAL SITE PLAN

PROJECT NO.
21-12032

DRAWING
E100

\\tet-file1\Users\corey.stone\Documents\12032-E-COS Tulare CTE_corey.stone.rvt

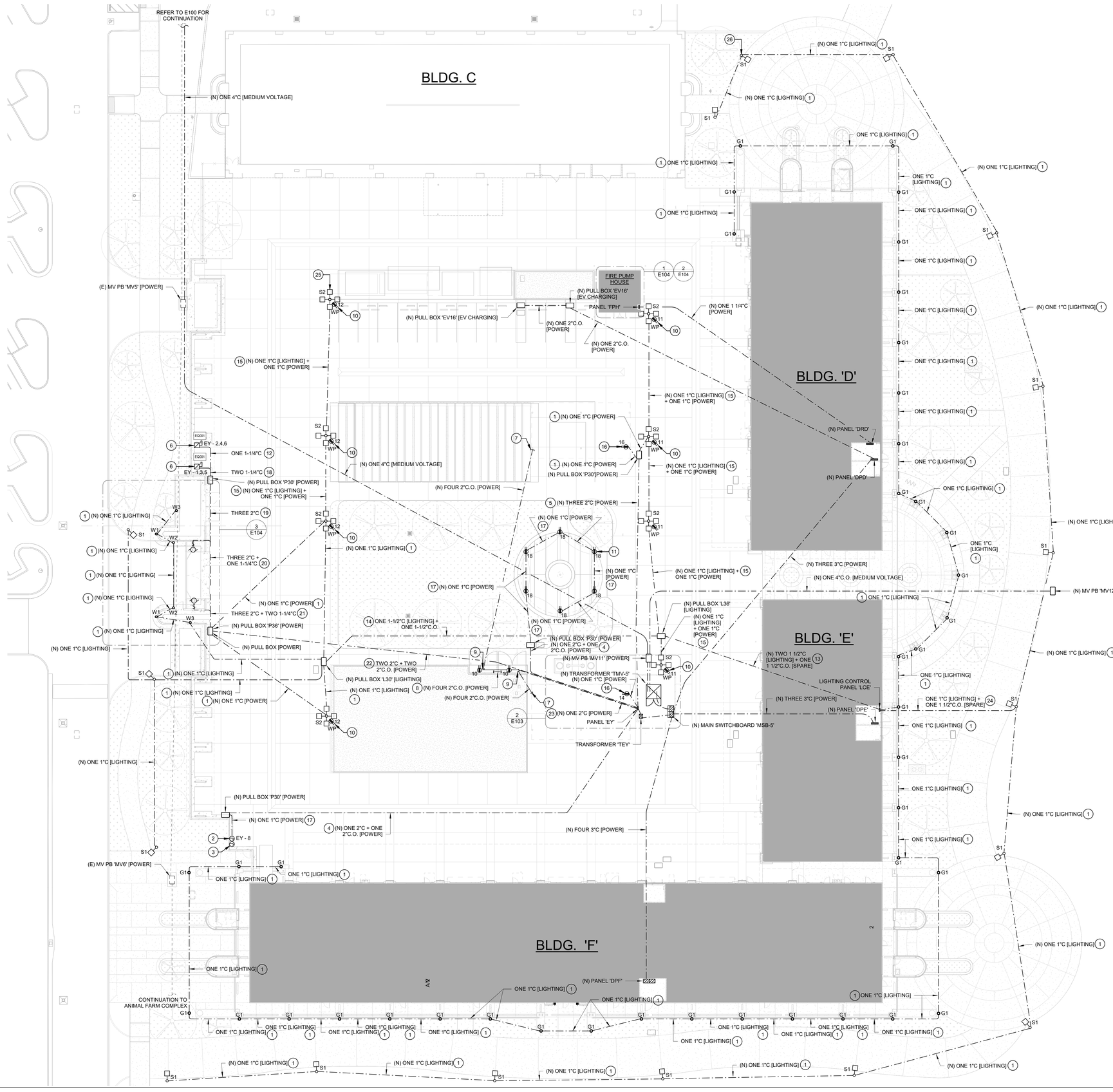
BLDG. C
BLDG. 'D'
BLDG. 'E'
BLDG. 'F'
FIRE PUMP HOUSE
REFER TO E100 FOR CONTINUATION
(N) ONE 4"C [MEDIUM VOLTAGE]
(E) MV PB 'MV5' [POWER]
(N) PULL BOX 'EV16' [EV CHARGING]
PANEL 'FPH'
(N) ONE 1 1/4"C [POWER]
(N) ONE 2"C.O. [POWER]
(N) ONE 1"C [LIGHTING] + ONE 1"C [POWER]
(N) ONE 1"C [LIGHTING]
ONE 1"C [LIGHTING]
(N) ONE 1"C [POWER]
(N) PULL BOX 'P30' [POWER]
(N) FOUR 2"C.O. [POWER]
(N) THREE 2"C [POWER]
(N) PANEL 'DRD'
(N) PANEL 'DPD'
(N) PANEL 'DPF'
THREE 2"C
THREE 2"C + ONE 1-1/4"C
THREE 2"C + TWO 1-1/4"C
(N) PULL BOX 'P36' [POWER]
(N) PULL BOX [POWER]
TWO 2"C + TWO 2"C.O. [POWER]
(N) PULL BOX 'L30' [LIGHTING]
ONE 1-1/2"C [LIGHTING] + ONE 1-1/2"C.O.
(N) FOUR 2"C.O. [POWER]
(N) ONE 2"C + ONE 2"C.O. [POWER]
(N) MV PB 'MV11' [POWER]
(N) TRANSFORMER 'TMV-5'
(N) ONE 1"C [POWER]
(N) ONE 2"C [POWER]
PANEL 'EY'
TRANSFORMER 'TEY'
(N) MAIN SWITCHBOARD 'MSB-5'
(N) PULL BOX 'L36' [LIGHTING]
(N) ONE 1"C [LIGHTING] + ONE 1"C [POWER]
(N) TWO 1 1/2"C [LIGHTING] + ONE 1 1/2"C.O. [SPARE]
LIGHTING CONTROL PANEL 'LCE'
(N) THREE 3"C [POWER]
(N) ONE 4"C.O. [MEDIUM VOLTAGE]
(N) MV PB 'MV12' [POWER]
(N) ONE 1"C [LIGHTING] + ONE 1 1/2"C.O. [SPARE]
(E) MV PB 'MV6' [POWER]
EY - 2,4,6
EY - 1,3,5
EY - 8
ONE 1-1/4"C
TWO 1-1/4"C
(N) PULL BOX 'P30' [POWER]
(N) ONE 1"C [LIGHTING] + ONE 1"C [POWER]
(N) ONE 4"C [MEDIUM VOLTAGE]
(N) FOUR 2"C.O. [POWER]
(N) THREE 2"C [POWER]
(N) ONE 1"C [POWER]
(N) ONE 1"C [LIGHTING]
(N) ONE 1"C [LIGHTING] + ONE 1"C [POWER]
(N) ONE 1"C [POWER]
(N) ONE 1"C [LIGHTING]
(N) ONE 1"C [POWER]
(N) ONE 1"C [LIGHTING]
(N) ONE 1"C [LIGHTING]
(N) ONE 1"C [LIGHTING

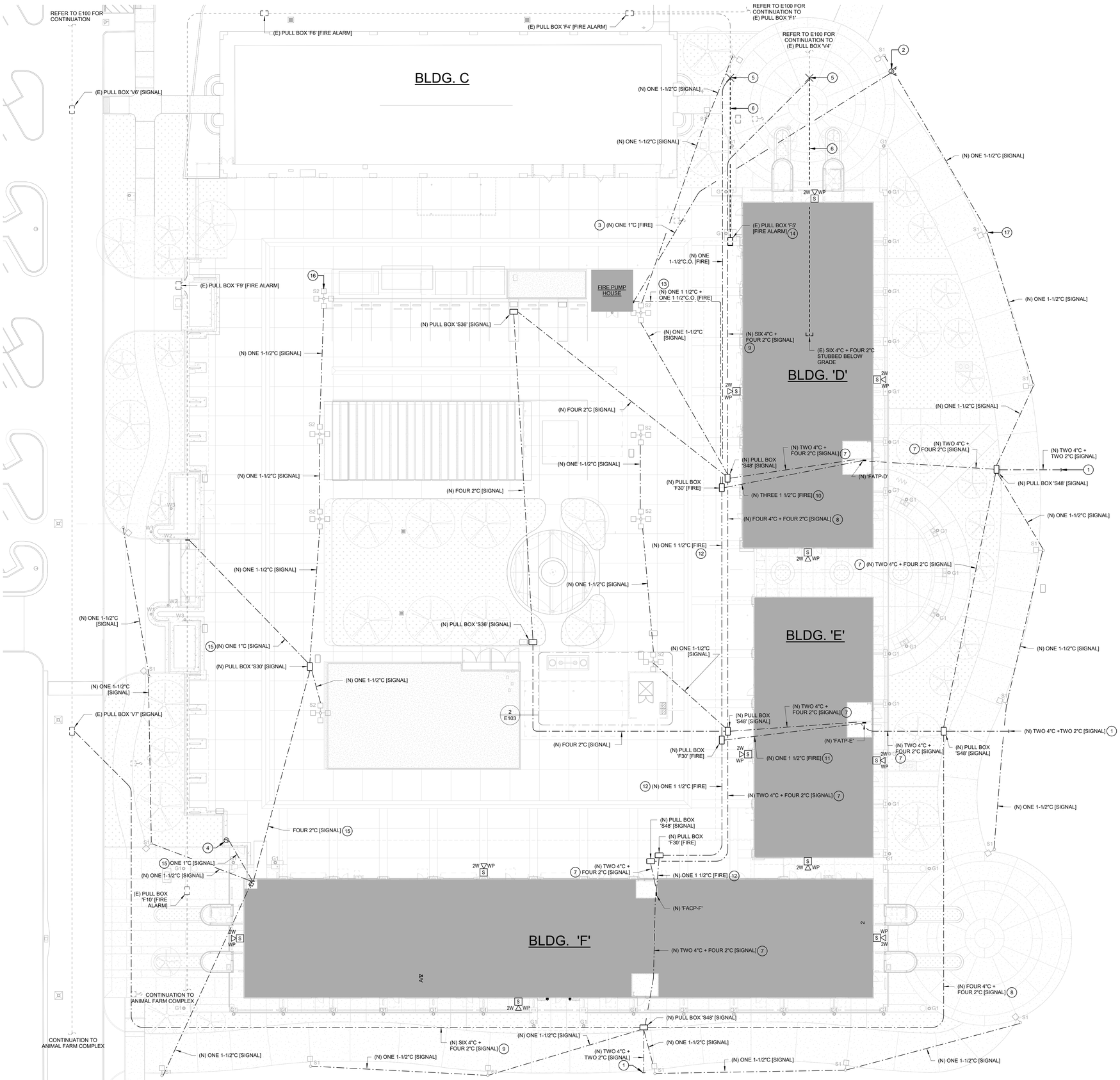

KEYNOTES

1. STUB CONDUIT FOR FUTURE EXPANSION. PROVIDE MARKING TAPE AT 12" BELOW SURFACE.
2. PROVIDE WEATHERPROOF CONNECTIONS TO TWO TAMPER SWITCHES AT DOCV.
3. ONE 1"C, 4#14 CU THHN TO TWO TAMPER SWITCHES AT DOUBLE DETECTOR CHECK VALVE. CONNECTIONS TO TAMPER SWITCHES SHALL BE WEATHERPROOF.
4. PROVIDE ONE 1"C WITH ONE TYPE 'DX' CABLE. ROUTE CABLE TO BUILDING 'F' IDF. COORDINATE PRECISE LOCATION WITH IRRIGATION SYSTEM INSTALLER.
5. INTERCEPT (E) UNDERGOUND SPARE CONDUITS AT LIMIT OF EXCAVATION AND PROVIDE (N) UNDGROUND SWEEPS TO CONNECT (N) PORTION OF UNDERGOUND CONDUITS.
6. REMOVE (E) PORTION OF UNDEGROUND CONDUIT BACK TO LIMIT OF EXCAVATION.
7. PROVIDE ONE TYPE 'FO' CABLE.
8. PROVIDE TWO TYPE 'FO' CABLES.
9. PROVIDE THREE TYPE 'FO' CABLES.
10. PROVIDE ONE 1 1/2"C WITH ONE TYPE 'FNET' CABLE + ONE 1 1/2"C WITH ONE TYPE 'FAS' CABLE + 1 1/2"C.O. (SPARE)
11. PROVIDE TWO TYPE 'FNET' CABLES.
12. PROVIDE ONE TYPE 'FNET' CABLES.
13. PROVIDE ONE TYPE 'FAS' CABLE IN ONE CONDUIT. LEAVE THE OTHER CONDUIT AS A SPARE.
14. REMOVE (E) FIRE ALARM PULLBOX.
15. PROVIDE ONE TYPE 'DX' CABLE.
16. PROVIDE ONE TYPE 'L16' UNDERGROUND PULLBOX ADJACENT TO LIGHTING POLE BASE. ALL POWER, LIGHTING AND SIGNAL CONDUIT CONDUITS SHOWN DIAGRAMATICALLY ROUTING TO POLE SHALL ROUTE TO THIS PULLBOX. FROM PULL BOX RUN ONE 1"C (RECEPTACLE), ONE 1"C (LIGHTING) AND ONE 1"C.O.(SIGNAL) INTO POLE. TYPICAL FOR ALL TYPE 'S2' FIXTURES.
17. PROVIDE ONE TYPE 'L16' UNDERGROUND PULLBOX ADJACENT TO LIGHTING POLE BASE. ALL POWER, LIGHTING AND SIGNAL CONDUIT CONDUITS SHOWN DIAGRAMATICALLY ROUTING TO POLE SHALL ROUTE TO THIS PULLBOX. FROM PULL BOX RUN ONE 1"C (LIGHTING) AND ONE 1"C.O.(SIGNAL) INTO POLE. TYPICAL FOR ALL TYPE 'S1' FIXTURES.

GENERAL NOTES

A. ELECTRICAL FACILITIES SHOWN DASHED ARE EXISTING:
   a. THOSE SHOWN LIGHTWEIGHT (FADED) ARE EXISTING TO REMAIN OR REQUIRE MODIFICATION AS NOTED.
   b. THOSE SHOWN HEAVYWEIGHT (DARK) REQUIRE REMOVAL AS NOTED.

B. EXISTING ELECTRICAL FACILITIES AND CIRCUITING SHOWN ARE BASED ON LIMITED RECORD DRAWINGS AND LIMITED SITE VISITS. THE DRAWINGS MAY NOT ACCURATELY REPRESENT ACTUAL EXISTING CONDITIONS IN THE FIELD. THE CONTRACTOR SHALL FIELD VERIFY ALL EXISTING CONDITIONS AND RING OUT EXISTING CIRCUITS TO DETERMINE EXACT ROUTING.

C. PROVIDE PULLBOXES PER DETAILS 6/E600.

D. SITE CONDUITS SHALL BE INSTALLED A MINIMUM OF 48" BELOW FINAL GRADE TO TOP OF CONDUIT.

E. SPECIAL PRECAUTION SHALL BE TAKEN WHEN TRENCHING TO LOCATE, PROTECT AND PRESERVE EXISTING UNDERGROUND UTILITIES. ANY DAMAGE CAUSED DURING THE COURSE OF CONSTRUCTION SHALL BE IMMEDIATELY REPAIRED.

ENLARGED ELECTRICAL SITE PLAN - SIGNAL & FIRE ALARM

1" = 20'-0" | 1

FOR BID ONLY

Teter, LLP expressly reserves its common law copyright and other property rights in these plans. This document, the ideas and designs incorporated herein, as an instrument of professional service, is not to be used in whole or in part, for any other project without prior written authorization.

MARK	DATE	DESCRIPTION
	11/1/22	DSA BACKCHECK

REGISTERED PROFESSIONAL ENGINEER — CHRISTOPHER M. COREY — No. E23253 — Exp. 6/30/23 — ELECTRICAL

TETER, LLP
FRESNO HEADQUARTERS
VISALIA | BAKERSFIELD | MODESTO | SAN LUIS OBISPO
ARCHITECTS ENGINEERS CONNECTED

TETER

TULARE CAMPUS CTE
COLLEGE OF THE SEQUOIAS
4999 E. BARDSLEY AVE.
TULARE, CA

DRAWING TITLE
ENLARGED ELECTRICAL SITE PLAN - SIGNAL & FIRE ALARM

PROJECT NO.
21-12032

DRAWING
E102

\\tet-file1\Users\corey.stone\Documents\12032-E-COS Tulare CTE_corey.stone.rvt

PLOT DATE: 11/2/2022 9:50:01 AM

\\tet-file1\Users\corey.stone\Documents\12032-E-COS Tulare CTE_corey.stone.rvt

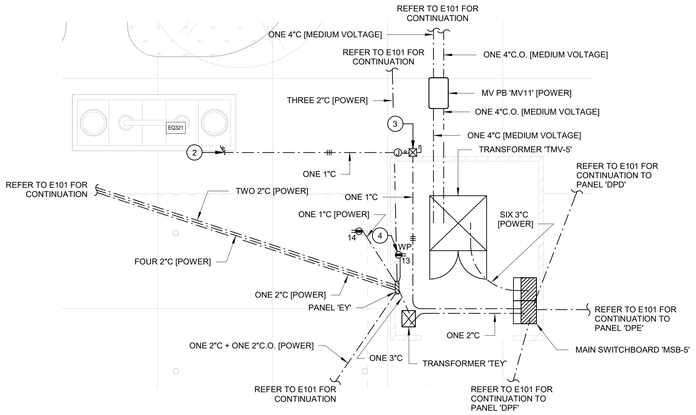

POWER PLAN - NEW ELECTRICAL YARD — 1/8" = 1'-0" — 2

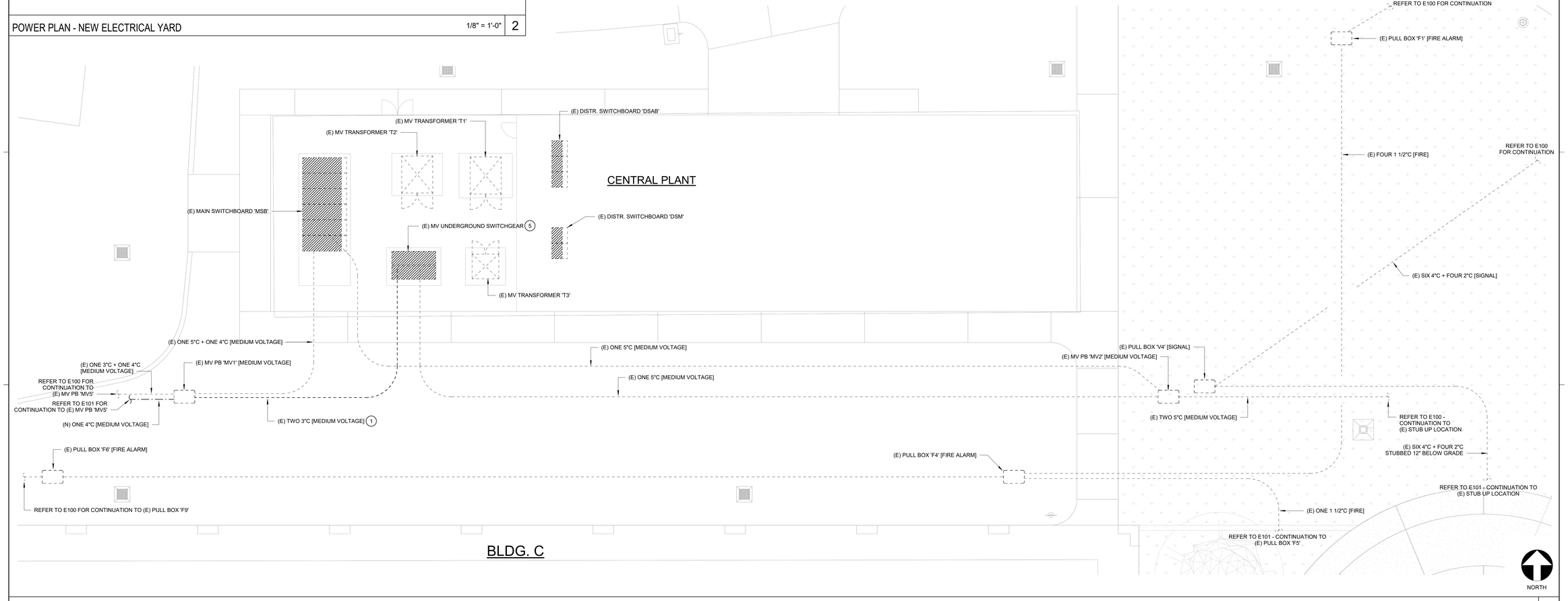

ELECTRICAL SITE PLAN - CENTRAL PLANT — 1/8" = 1'-0" — 1

KEYNOTES

1. PROVIDE (N) FEEDER IN (E) UNDERGORUND CONDUIT, REFER TO SINGLE LINE ON SHEET E700.
2. PROVIDE 480V, 3ϕ, 5HP POWER CONNECTION TO IRRIGATION PUMP TRAINER, 'EQ321'.
3. PROVIDE HEAVY DUTY WEATHERPROOF 600V, 30A, 3-POLE FUSED DISCONNECT WITH INTEGRAL MAGNETIC STARTER. PROVIDE CONNECTION FOR 480V, 3ϕ, 5HP IRRIGATION PUMP TRAINER, 'EQ321'.
4. PROVIDE WEATHERPROOF GFCI RECEPTACLE LOCATED ON CMU WALL WITH 'IN-USE' TYPE COVER. MOUNT AT +18" A.F.G.
5. CONNECT (N) MV FEEDER TO (E) SPARE LATERAL AT (E) UNDERGROUND SWITCHGEAR.

GENERAL NOTES

A. EXISTING ELECTRICAL FACILITIES AND CIRCUITING SHOWN ARE BASED ON LIMITED RECORD DRAWINGS AND LIMITED SITE VISITS. THE DRAWINGS MAY NOT ACCURATELY REPRESENT ACTUAL EXISTING CONDITIONS IN THE FIELD. THE CONTRACTOR SHALL FIELD VERIFY ALL EXISTING CONDITIONS AND RING OUT EXISTING CIRCUITS TO DETERMINE EXACT ROUTING.

B. PROVIDE ELECTRICAL FEEDERS PER SINGLE LINE DIAGRAM ON DRAWING E700.

C. PROVIDE PULLBOXES PER DETAILS 1/E600, 6/E600 AND 28/E600.

D. MEDIUM VOLTAGE CONDUITS SHALL BE INSTALLED PER DETAIL 12/E600,

E. SPECIAL PRECAUTION SHALL BE TAKEN WHEN TRENCHING TO LOCATE, PROTECT AND PRESERVE EXISTING UNDERGROUND UTILITIES. ANY DAMAGE CAUSED DURING THE COURSE OF CONSTRUCTION SHALL BE IMMEDIATELY REPAIRED.

PLOT DATE: 11/2/2022 9:50:04 AM

FOR BID ONLY

Teter, LLP expressly reserves its common law copyright and other property rights in these plans. This document, the ideas and designs incorporated herein, as an instrument of professional service, is not to be used in whole or part, for any other project without prior written authorization.

MARK	DATE	DESCRIPTION
	11/1/22	DSA BACKCHECK

REGISTERED PROFESSIONAL ENGINEER — COREY M. STONE — No. E23253 — Exp. 6-30-23 — ELECTRICAL

TETER, LLP
FRESNO HEADQUARTERS
VISALIA | BAKERSFIELD | MODESTO | SAN LUIS OBISPO
ARCHITECTS ENGINEERS CONNECTED

TETER

TULARE CAMPUS CTE
COLLEGE OF THE SEQUOIAS
4999 E. BARDSLEY AVE.
TULARE, CA

DRAWING TITLE
ENLARGED ELECTRICAL SITE PLAN - CENTRAL PLANT

PROJECT NO.
21-12032

DRAWING
E103

\\tet-file1\Users\corey.stone\Documents\12032-E-COS Tulare CTE_corey.stone.rvt

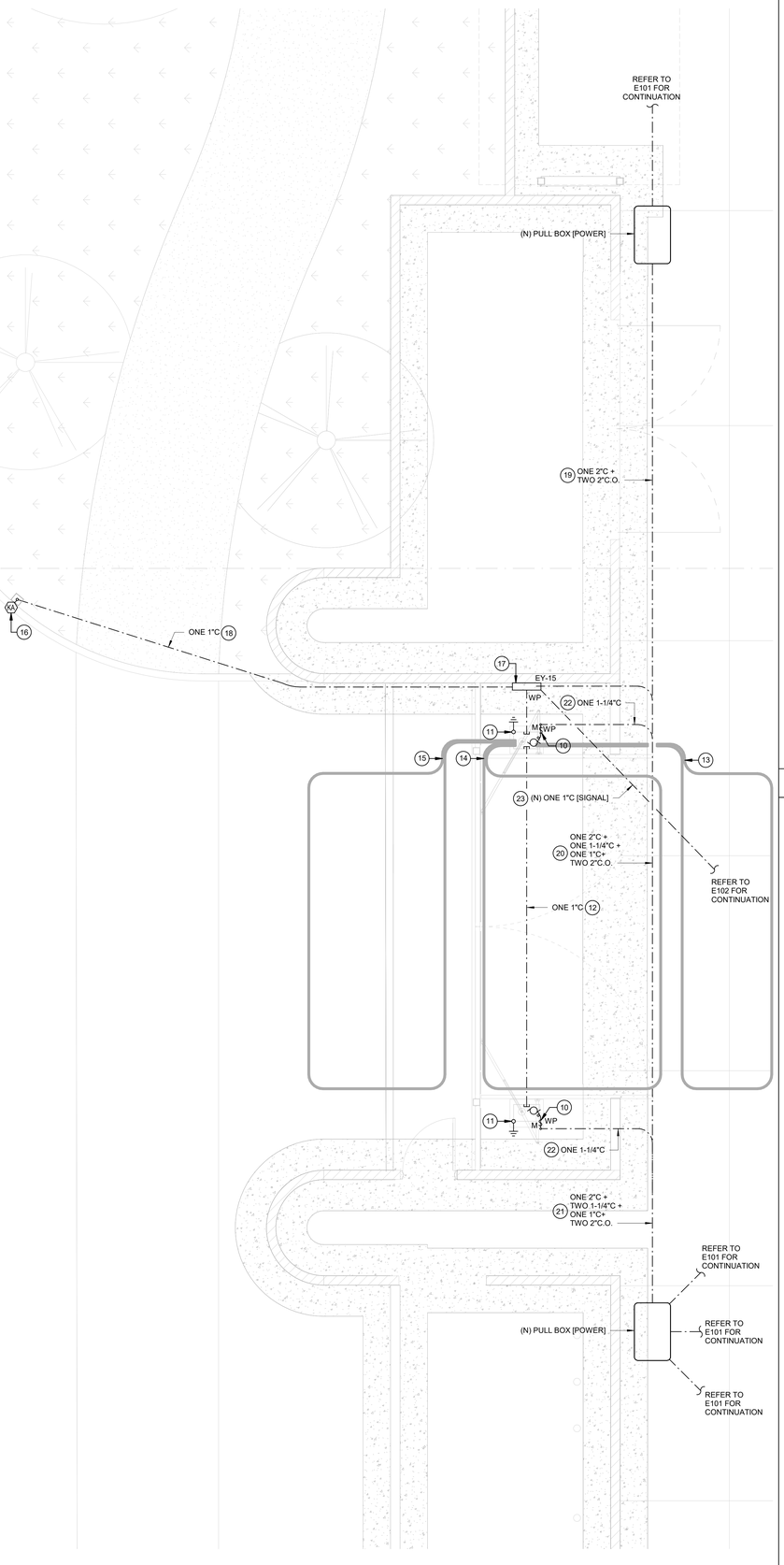

POWER PLAN - ENTRY GATE 1/4" = 1'-0" 3

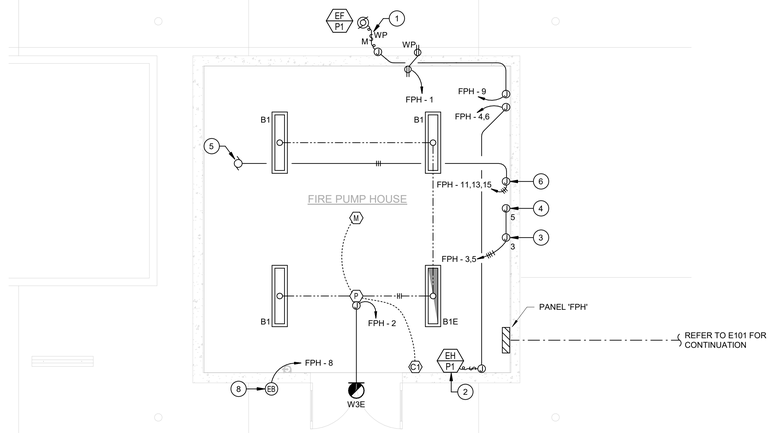

NORTH

POWER PLAN - FIRE PUMP HOUSE 1/4" = 1'-0" 1

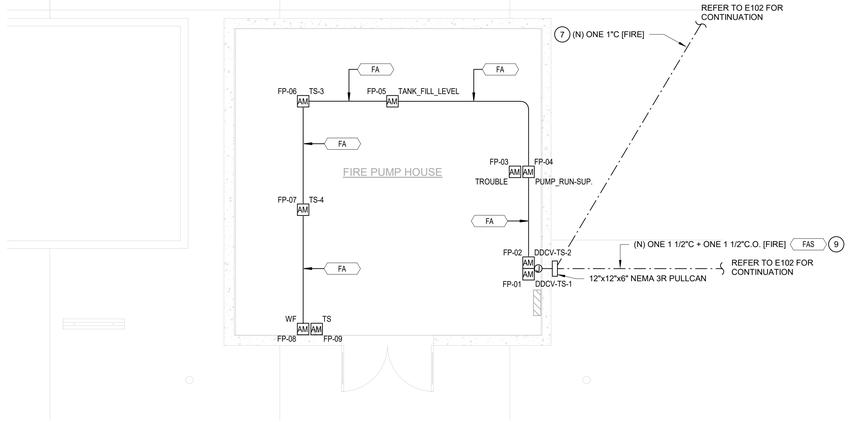

NORTH

FIRE ALARM PLAN - FIRE PUMP HOUSE 1/4" = 1'-0" 2

KEYNOTES

1. PROVIDE WEATHERPROOF MOTOR RATED AC SNAP SWITCH DISCONNECT ADJACENT TO EXHAUST FAN. PROVIDE POWER CONNECTION TO 115V, 1/4 HP EXHAUST FAN 'EH-P1'. ROUTE EXHAUST FAN BRANCH CIRCUIT THROUGH LINE VOLTAGE THERMOSTAT, REFER TO MECHANICAL DRAWINGS FOR EXACT THERMOSTAT LOCATION.
2. PROVIDE AC SNAP SWITCH DISCONNECT ADJACENT TO ELECTRIC BASEBOARD HEATER. PROVIDE POWER CONNECTION TO 208V, 1Φ, 1500w ELECTRIC BASEBOARD HEATER 'EH-P1'. ROUTE ELECTRIC BASEBOARD HEATER BRANCH CIRCUIT THROUGH LINE VOLTAGE THERMOSTAT. REFER TO MECHANICAL DRAWINGS FOR EXACT THERMOSTAT LOCATION.
3. PROVIDE POWER CONNECTION TO PUMP CONTROLLER.
4. PROVIDE POWER CONNECTION TO BATTERY CHARGING SYSTEM.
5. PROVIDE POWER CONNECTION TO 208V, 3Φ, 2HP PRESSURE MAINTENANCE (JOCKEY) PUMP THROUGH JOCKEY PUMP CONTROLLER.
6. PROVIDE POWER CONNECTION TO 208V, 3Φ JOCKEY PUMP CONTROLLER.
7. ONE 1"C, 4#14 CU THHN TO TWO TAMPER SWITCHES AT DOUBLE DETECTOR CHECK VALVE.
8. PROVIDE 120VAC POWER CONNECTION TO FIRE SPRINKLER RISER ELECTRIC BELL THROUGH AUXILIARY CONTACT AT WATERFLOW SWITCH. SOURCE CIRCUIT BREAKER SHALL HAVE A RED MECHANICAL LOCK-ON DEVICE.
9. PROVIDE ONE 1 1/2"C WITH ONE TYPE 'FAS' CABLE + ONE 1 1/2"C.O. (SPARE)
10. PROVIDE WEATHER PROOF MOTOR RATED AC SNAP SWITCH DISCONNECT ADJACENT TO MOTOR OPERATOR. PROVIDE POWER CONNECTION TO 120V, 1Φ, 1HP TO ACCESS GATE MOTOR OPERATOR.
11. PROVIDE #6 CU THHN GND FROM OPERATOR TO DEDICATED EARTH GROUND ROD.
12. ONE 1"C WITH ONE SHIELDED TWISTED PAIR 18AWG WITH SHIELD GROUNDED TO CHASSIS OF ONE GATE OPERATOR.
13. PROVIDE EXIT LOOP DETECTOR AND CONNECTION TO GATE OPERATOR PER MANUFACTURERS REQUIREMENTS.
14. PROVIDE SHADOW LOOP DETECTOR AND CONNECTION TO GATE OPERATOR PER MANUFACTURERS REQUIREMENTS.
15. PROVIDE INTERRUPT LOOP DETECTOR AND CONNECTION TO GATE OPERATOR PER MANUFACTURERS REQUIREMENTS.
16. PROVIDE KEYPAD ACCESS CONTROL WITH KEY OVERRIDE, CYBERLOCK #AKG2-01/ AKGR2-01 IN WEATHER PROOF JUNCTION BOX MOUNTED TO PEDESTAL FOR OPERATION OF GATE. COORDINATE WITH OWNER'S EXISTING CYBER LOCK SYSTEM.
17. PROVIDE 12" x 12" x 6" NEMA 3R ENCLOSURE WITH ACCESS DOOR. PROVIDE CONTROLLER HUB, CYBERLOCK #FSR-SH02 IN ENCLOSURE. PROVIDE ONE WEATHERPROOF GFCI DUPLEX OUTLET IN ENCLOSURE TO PROVIDE POWER FOR HUB CONTROLLER. COORDINATE WITH OWNER'S EXISTING CYBER LOCK SYSTEM.
18. ONE 1"C WITH ONE TYPE 'DX' CABLE BETWEEN KEYPAD ACCESS CONTROL AND CONTROLLER HUB ENCLOSURE.
19. ONE 2"C WITH 6#6 CU THWN AND 2#6 CU GND AND TWO 2"C.O. SPARES.
20. ONE 2"C WITH 6#6 CU THWN AND 2#6 CU GND FOR ELECTRIC PRESSURE WASHERS + ONE 1-1/4"C WITH 2#8 CU THWN AND 1#8 CU GND FOR GATE MOTOR OPERATOR + ONE 1"C, WITH 2#12 CU THWN AND 1#12 CU GND (FOR CONTROLLER HUB) + TWO 2"C.O. SPARE.
21. ONE 2"C WITH 6#6 CU THWN AND 2#6 CU GND (FOR ELECTRIC PRESSURE WASHERS) + TWO 1-1/4"C WITH 2#8 CU THWN AND 1#8 CU GND IN EACH CONDUIT (FOR GATE MOTOR OPERATORS) + ONE 1"C (FOR CONTROLLER HUB), WITH 2#12 CU THWN AND 1#12 CU GND + TWO 2"C.O. SPARE.
22. ONE 1-1/4"C WITH 2#8 CU THWN AND 1#8 CU GND FOR GATE MOTOR OPERATOR.
23. ONE 1"C WITH ONE TYPE 'DX' CABLE.

LIGHTING WIRING LEGEND

- ONE 3/4"C WITH CLASS 2 CATEGORY 5E PLENUM RATED CABLE GREEN IN COLOR WITH RJ45 CONNECTORS ON EACH END
- LIGHTING BRANCH CIRCUIT IN EMT CONDUIT CONSISTING OF THE FOLLOWING BRANCH CIRCUIT CONDUCTORS:
  1. HOT - 1#12 CU THHN (BROWN, ORANGE OR YELLOW)
  2. NEUTRAL - 1#12 CU THHN (WHITE WITH COLORED STRIPE)
  3. EQUIPMENT GROUNDING - 1#12 CU THHN (GREEN)
- 4# TYPE MC-PCS MC LUMINARY CABLE CONSISTING OF THE FOLLOWING CIRCUIT CONDUCTORS:
  1. CONTROLLED HOT - 1#12 CU THHN (BROWN)
  2. UNSWITCHED HOT - 1#12 CU THHN (ORANGE)
  3. NEUTRAL - 1#12 CU THHN (GREY)
  4. EQUIPMENT GROUNDING - 1#12 CU THHN (GREEN)
  5. 0-10VDC CONTROL: PVC JACKET CONTAINING 2#16 CU TFN (PURPLE & GRAY)
- TYPE MC-PCS MC LUMINARY CABLE CONSISTING OF THE FOLLOWING CIRCUIT CONDUCTORS:
  1. CONTROLLED HOT - 1#12 CU THHN (BROWN)
  2. NEUTRAL - 1#12 CU THHN (GREY)
  3. EQUIPMENT GROUNDING - 1#12 CU THHN (GREEN)
  4. 0-10VDC CONTROL: PVC JACKET CONTAINING 2#16 CU TFN (PURPLE & GRAY)

LIGHTING SYMBOL LEGEND

- (P) NETWORK DIMMING CONTROL RELAY
- (M) NETWORK CEILING MOUNTED OCCUPANCY SENSOR
- (C1) SINGLE-ZONE NETWORK DIMMING MANUAL CONTROL STATION AT +48" TO TOP OF OUTLET BOX

GENERAL NOTES

A. PROVIDE ELECTRICAL FEEDERS PER SINGLE LINE DIAGRAM ON DRAWING E700.

B. SITE CONDUITS SHALL BE INSTALLED A MINIMUM OF 48" BELOW FINAL GRADE TO TOP OF CONDUIT.

C. SPECIAL PRECAUTION SHALL BE TAKEN WHEN TRENCHING TO LOCATE, PROTECT AND PRESERVE EXISTING UNDERGROUND UTILITIES. ANY DAMAGE CAUSED DURING THE COURSE OF CONSTRUCTION SHALL BE IMMEDIATELY REPAIRED.

D. REFER TO PANEL SCHEDULES ON SHEETS E810-E813 FOR REFERENCE TO THE APPROPRIATE PANEL MOUNTING DETAIL ON E600.

E. CIRCUITS SUPPLYING EMERGENCY LIGHTING FIXTURES SHALL BE SUPPLIED BY A CONTROLLED HOT CONDUCTOR AND A CONSTANT HOT CONDUCTOR OF THE SAME BRANCH CIRCUIT.

F. EXIT SIGNAGE AND WALL MOUNTED EMERGENCY LIGHTING UNITS SHALL BE SUPPLIED BY AN UNSWITCHED HOT CONDUCTOR.

G. REFER TO ARCHITECTURAL SHEETS FOR ELEVATIONS OF WALL MOUNTED LIGHTING FIXTURES.

H. ALL EXPOSED CONDUIT IN ROOMS WITH NO CEILINGS SHALL BE ROUTED PARALLEL OR PERPENDICULAR TO TRUSSES AND GIRDERS. LINES SHOWN AS SPLINES AND ARCS ARE FOR DIAGRAMMATIC PURPOSES ONLY.

FOR BID ONLY

Teter, LLP expressly reserves its common law copyright and other property rights in these plans. This document, the ideas and designs incorporated herein, as an instrument of professional service, is not to be used in whole or part, for any other project without prior written authorization.

MARK	DATE	DESCRIPTION
	11/1/22	DSA BACKCHECK

TETER, LLP
FRESNO HEADQUARTERS
VISALIA | BAKERSFIELD | MODESTO | SAN LUIS OBISPO
ARCHITECTS ENGINEERS CONNECTED

TETER

TULARE CAMPUS CTE
COLLEGE OF THE SEQUOIAS
4999 E. BARDSLEY AVE.
TULARE, CA

DRAWING TITLE
ENLARGED ELECTRICAL SITE PLANS

PROJECT NO.
21-12032

DRAWING
E104

PLOT DATE: 11/2/2022 9:50:05 AM

\\tet-file1\Users\corey.stone\Documents\12032-E-COS Tulare CTE_corey.stone.rvt

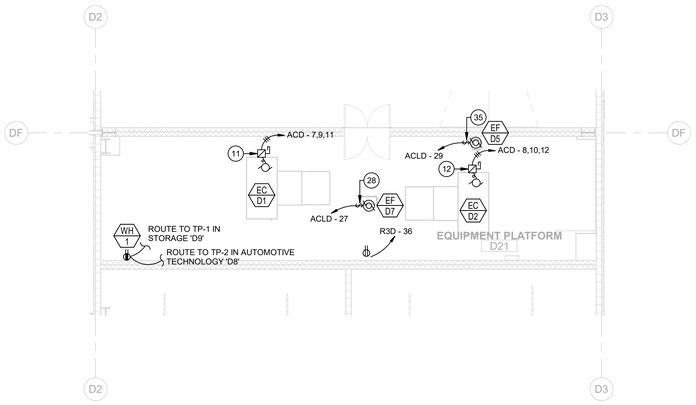

NORTH

BUILDING D MECHANICAL PLATFORM PLAN — 1/8" = 1'-0" — 2

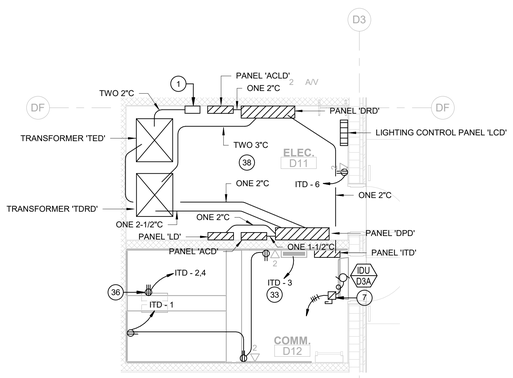

NORTH

POWER PLAN - BUILDING 'D' ENLARGEMENT — 1/4" = 1'-0" — 3

GENERAL NOTES

A. PROVIDE ELECTRICAL FEEDERS PER SINGLE LINE DIAGRAM.

B. CONDUIT AND CONDUCTORS FOR NEW OUTLETS SHALL BE CONCEALED, U.O.N.

C. PENETRATIONS THROUGH WALLS, CEILINGS, FLOORS, AND/OR ROOFS SHALL BE SEALED.

D. ALL 120V, 15A AND 20A RECEPTACLES WITHIN RESTROOMS SHALL BE GFCI TYPE RECEPTACLES. IN ALL OTHER SPACES, 120V, 15A AND 20A RECEPTACLES WITHIN 6' OF SINKS OR FAUCETS SHALL BE GFCI TYPE RECEPTACLES.

E. REFER TO E801 FOR EQUIPMENT SCHEDULE SHOWING SPECIAL RECEPTACLE REQUIRMENTS

F. ALL EXPOSED CONDUIT IN ROOMS WITH NO CEILINGS SHALL BE ROUTED PARALLEL OR PERPENDICULAR TO TRUSSES AND GIRDERS. LINES SHOWN AS SPLINES AND ARCS ARE FOR DIAGRAMATIC PURPOSES ONLY.

G. REFER TO PANEL SCHEDULES ON SHEETS E810-E813 FOR REFERENCE TO THE APPROPRIATE PANEL MOUNTING DETAIL ON E600.

H. REFER TO TRANSFORMER SCHEDULE ON SHEET E800 FOR REFERENCE TO THE APPROPRIATE MOUNTING DETAIL ON E600.

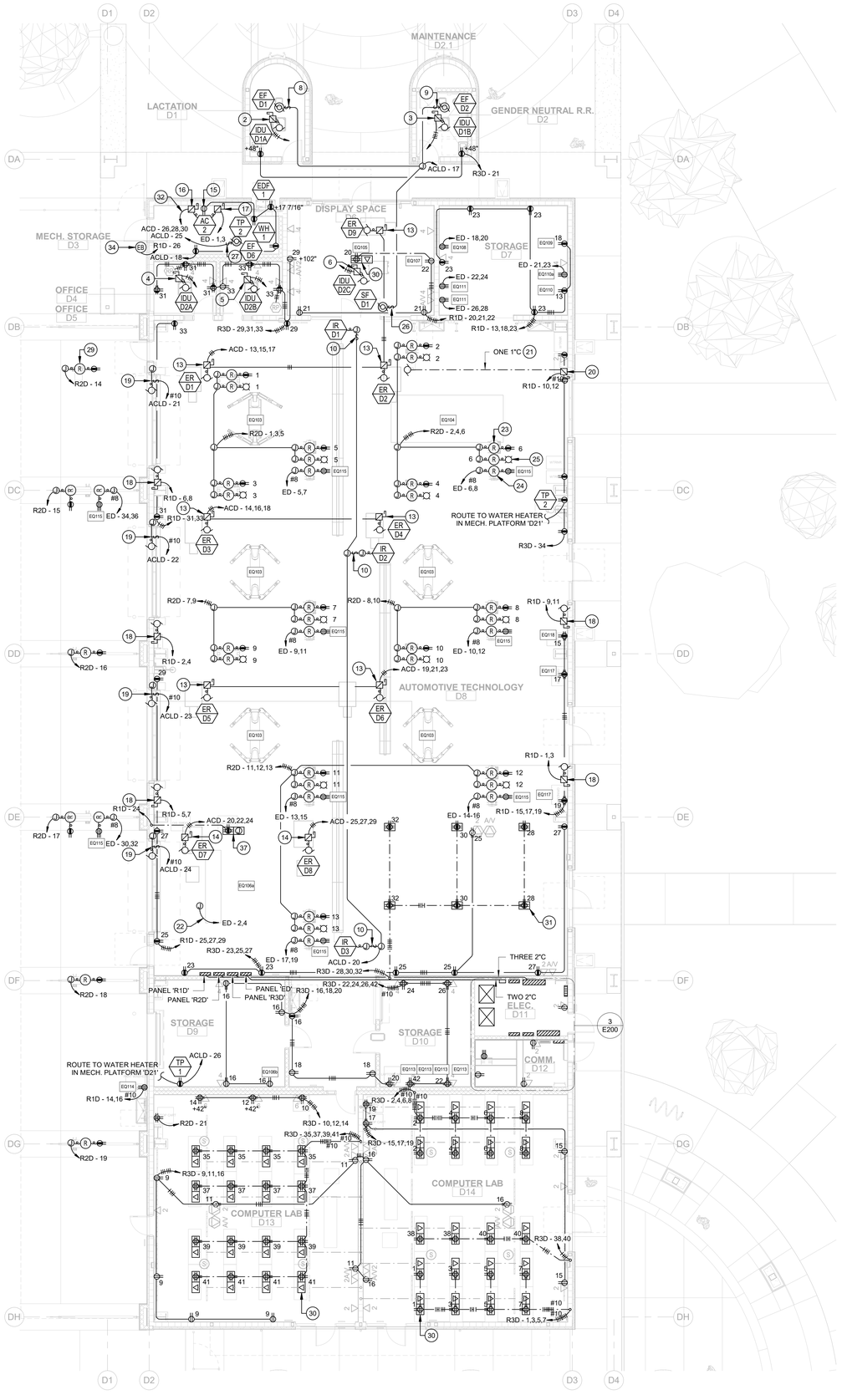

NORTH

POWER PLAN - BUILDING 'D' — 1/8" = 1'-0" — 1

KEYNOTES

1. PROVIDE ENCLOSED CIRCUIT BREAKER FOR OVERCURRENT PROTECTION OF TRANSFORMER SECONDARY, REFER TO SINGLE LINE DIAGRAM ON E700.
2. PROVIDE GENERAL DUTY 250V, 30A, 3-POLE FUSED DISCONNECT. PROVIDE CONNECTION FOR 208V, 1ϕ, 0.2 MCA, INDOOR UNIT 'IDU-D1A' FROM OUTDOOR UNIT 'ODU-D1'. INDOOR UNIT BRANCH CIRUIT SHALL CONSIST OF ONE 3/4"C WITH 3#12 CU THWN AND 1#12 CU GND.
3. PROVIDE GENERAL DUTY 250V, 30A, 3-POLE FUSED DISCONNECT. PROVIDE CONNECTION FOR 208V, 1ϕ, 0.2 MCA, INDOOR UNIT 'IDU-D1B' FROM OUTDOOR UNIT 'ODU-D1'. INDOOR UNIT BRANCH CIRUIT SHALL CONSIST OF ONE 3/4"C WITH 3#12 CU THWN AND 1#12 CU GND.
4. PROVIDE GENERAL DUTY 250V, 30A, 3-POLE FUSED DISCONNECT. PROVIDE CONNECTION FOR 208V, 1ϕ, 0.2 MCA, INDOOR UNIT 'IDU-D2A' FROM OUTDOOR UNIT 'ODU-D2'. INDOOR UNIT BRANCH CIRUIT SHALL CONSIST OF ONE 3/4"C WITH 3#12 CU THWN AND 1#12 CU GND.
5. PROVIDE GENERAL DUTY 250V, 30A, 3-POLE FUSED DISCONNECT. PROVIDE CONNECTION FOR 208V, 1ϕ, 0.2 MCA, INDOOR UNIT 'IDU-D2B' FROM OUTDOOR UNIT 'ODU-D2'. INDOOR UNIT BRANCH CIRUIT SHALL CONSIST OF ONE 3/4"C WITH 3#12 CU THWN AND 1#12 CU GND.
6. PROVIDE GENERAL DUTY 250V, 30A, 3-POLE FUSED DISCONNECT. PROVIDE CONNECTION FOR 208V, 1ϕ, 1.2 MCA, INDOOR UNIT 'IDU-D2C' FROM OUTDOOR UNIT 'ODU-D2'. INDOOR UNIT BRANCH CIRUIT SHALL CONSIST OF ONE 3/4"C WITH 3#12 CU THWN AND 1#12 CU GND.
7. PROVIDE GENERAL DUTY 250V, 30A, 3-POLE FUSED DISCONNECT. PROVIDE CONNECTION FOR 208V, 1ϕ, 0.63 MCA, INDOOR UNIT 'IDU-D3A' FROM OUTDOOR UNIT 'ODU-D3'. INDOOR UNIT BRANCH CIRUIT SHALL CONSIST OF ONE 3/4"C WITH 3#12 CU THWN AND 1#12 CU GND.
8. PROVIDE MOTOR RATED A/C SNAP SWITCH DISCONNECT. PROVIDE CONNECTION FOR 120V, 1ϕ, 83 WATTS, EXHAUST FAN 'EF-D1'. PROVIDE RELAY AND ROUTE EXHAUST FAN BRANCH CIRCUIT THROUGH RELAY FOR ON/OFF CONTROL THROUGH EMS SYSTEM.
9. PROVIDE MOTOR RATED A/C SNAP SWITCH DISCONNECT. PROVIDE CONNECTION FOR 120V, 1ϕ, 83 WATTS, EXHAUST FAN 'EF-D2'. PROVIDE RELAY AND ROUTE EXHAUST FAN BRANCH CIRCUIT THROUGH RELAY FOR ON/OFF CONTROL THROUGH EMS SYSTEM.
10. PROVIDE A/C SNAP SWITCH DISCONNECT LOCATED ADJACENT TO 120V, 1ϕ, 1.3 FLA INFRARED RADIANT HEATER.
11. PROVIDE HEAVY DUTY 600V, 30A, 3-POLE FUSED DISCONNECT. PROVIDE CONNECTION FOR 480V, 3ϕ, 7.5 HP, EVAPORATIVE COOLER 'EC-D1'.
12. PROVIDE HEAVY DUTY 600V, 30A, 3-POLE FUSED DISCONNECT. PROVIDE CONNECTION FOR 480V, 3ϕ, 7.5 HP, EVAPORATIVE COOLER 'EC-D2'.
13. PROVIDE GENERAL DUTY 600V, 30A, 3-POLE FUSED DISCONNECT. PROVIDE CONNECTION FOR 480V, 3ϕ, 0.75 HP, VEHICLE EXHAUST FAN.
14. PRROVIDE GENERAL DUTY 600V, 30A, 3-POLE FUSED DISCONNECT. PROVIDE CONNECTION FOR 480V, 3ϕ, 3 HP, VEHICLE EXHAUST FAN.
15. PROVIDE 120V RECEPTACLE AT +48" FOR POWER TO ELECTRONIC TIMER DRAIN FOR EQUIPMENT 'AC-2'.
16. PRROVIDE GENERAL DUTY 600V, 60A, 3-POLE FUSED DISCONNECT. PROVIDE CONNECTION FOR 480V, 3ϕ, 25 HP, COMPRESSOR 'AC-2'.
17. PRROVIDE GENERAL DUTY 250V, 15A, 3-POLE FUSED DISCONNECT. PROVIDE CONNECTION FOR 240V, 1ϕ, 0.75 HP, COMPRESSOR DRYER 'AC-2'.
18. PROVIDE GENERAL DUTY 250V, 30A, 3-POLE FUSED DISCONNECT. PROVIDE CONNECTION FOR 208V, 1ϕ, 12 FLA TO VEHICLE LIFT OPERATOR 'EQ103'.
19. PROVIDE A/C SNAP SWITCH DISCONNECT LOCATED ADJACENT TO OVERHEAD DOOR MOTOR. PROVIDE CONNECTION FOR 120V, 1ϕ, 1 HP OVERHEAD DOOR ELECTRIC OPERATOR. PROVIDE ONE 3/4"C.O. BETWEEN OPERATOR AND RECESSED JUNCTION BOX MOUNTED AT + 48"A.F.F TO TOP OF BOX TO FACILITATE DOOR CONTROL WIRING.
20. PROVIDE GENERAL DUTY 250V, 60A, 3-POLE FUSED DISCONNECT. PROVIDE CONNECTION FOR 208V, 1ϕ, 26 FLA TO VEHICLE LIFT OPERATOR 'EQ104'.
21. PROVIDE ONE 1"C WITH 2#6 CU THHN AND 1#10 CU GND FOR POWER CONNECTION TO VEHICLE LIFT OPERATOR 'EQ104'.
22. PROVIDE POWER CONNECTION FOR 240V, 1ϕ, 17.5 FLA FOR EMMISIONS TEST RACK 'EQ106a'.
23. PROVIDE CORD REEL, REELCRAFT EQUIPMENT #L45451239G OR EQUIVALENT. CORD REELS SHALL BE MOUNTED PER ARCHITECTURAL PLANS. TYPICAL OF ALL NEMA 5-15R CORD REELS IN ROOM.
24. PROVIDE CORD REEL, REELCRAFT EQUIPMENT #L7000 OR EQUIVALENT WITH A 35', #8 SOOW, 4 CONDUCTOR CABLE. CORD REELS SHALL BE MOUNTED PER ARCHITECTURAL PLANS. TYPICAL OF ALL SPECIAL PURPOSE CORD REELS IN ROOM.
25. PROVIDE CORD REEL, REELCRAFT EQUIPMENT #L405016211 OR EQUIVALENT. CORD REELS SHALL BE MOUNTED PER ARCHITECTURAL PLANS. TYPICAL OF ALL LIGHT CORD REELS IN ROOM.
26. PROVIDE MOTOR RATED A/C SNAP SWITCH DISCONNECT. PROVIDE CONNECTION FOR 120V, 1ϕ, 1/15 HP, SUPPLY FAN 'SF-D1'. PROVIDE ADDITIONAL CONDUIT ROUTED TO ROOF TO INTERLOCK SUPPLY FAN WITH OUTDOOR UNIT 'ODU-D2'.
27. PROVIDE MOTOR RATED A/C SNAP SWITCH DISCONNECT. PROVIDE CONNECTION FOR 120V, 1ϕ, 134 WATTS, EXHAUST FAN 'EF-D6'. PROVIDE RELAY AND ROUTE EXHAUST FAN BRANCH CIRCUIT THROUGH RELAY FOR ON/OFF CONTROL THROUGH EMS SYSTEM.
28. PROVIDE MOTOR RATED A/C SNAP SWITCH DISCONNECT. PROVIDE CONNECTION FOR 120V, 1ϕ, 116 WATTS, EXHAUST FAN 'EF-D7'. PROVIDE RELAY AND ROUTE EXHAUST FAN BRANCH CIRCUIT THROUGH RELAY FOR ON/OFF CONTROL THROUGH EMS SYSTEM.
29. PROVIDE CORD REEL, REELCRAFT EQUIPMENT #L45451239G OR EQUIVALENT. CORD REELS SHALL BE MOUNTED PER ARCHITECTURAL PLANS , TYPICAL OF ALL NEMA 5-15R CORD REELS UNDER CANOPY.
30. PROVIDE WIREMOLD #RFB9-OG FLOOR BOX WITH RFB119CTCAL TOP GUARD, ONE RFB119-2SAB DEVICE PLATE, TWO RFB119-SD DEVICE PLATES AND PROVIDE BLANK FACE PLATES FOR ALL UNUSED SPACES, TYPICAL FOR ALL FLOOR BOXES IN THIS ROOM.
31. PROVIDE WIREMOLD #RFB9-OG FLOOR BOX WITH RFB119CTCAL TOP GUARD, TWO RFB119-SGFI DEVICE PLATES AND PROVIDE BLANK FACE PLATES FOR ALL UNUSED SPACES, TYPICAL FOR ALL FLOOR BOXES IN THIS ROOM, U.O.N.
32. ONE 1"C, 3#4 CU THWN AND 1#8 CU GND.
33. PROVIDE DEDICATED 120VAC POWER CONNECTION TO FIRE ALARM TRANSPONDER PANEL. SOURCE PANEL AND CIRCUIT NUMBERS SHALL BE LABELED AT FIRE ALARM PANEL. SOURCE CIRCUIT BREAKER SHALL BE LABELED "FIRE ALARM/ECS" AND SHALL HAVE A RED MECHANICAL LOCK-ON DEVICE.
34. PROVIDE 120VAC POWER CONNECTION TO FIRE SPRINKLER RISER ELECTRIC BELL THROUGH AUXILIARY CONTACT AT WATERFLOW SWITCH. SOURCE CIRCUIT BREAKER SHALL HAVE A RED MECHANICAL LOCK-ON DEVICE.
35. PROVIDE MOTOR RATED A/C SNAP SWITCH DISCONNECT. PROVIDE CONNECTION FOR 120V, 1ϕ, 99 WATTS, EXHAUST FAN 'EF-D5'. PROVIDE RELAY AND ROUTE EXHAUST FAN BRANCH CIRCUIT THROUGH RELAY FOR ON/OFF CONTROL THROUGH EMS SYSTEM.
36. PROVIDE RACK MOUNTED NEMA L6-20R RECEPTACLE PER DETAIL 4/E602.
37. PROVIDE WIREMOLD #RFB9-OG FLOOR BOX WITH RFB119CTCAL TOP GUARD, TWO RFB119-SGFI DEVICE PLATES AND ONE RFB119-SKO DEVICE PLATE, AND PROVIDE BLANK FACE PLATES FOR ALL UNUSED SPACES.
38. CONDUITS IN THIS ROOM TO BE SECURED TO WALLS. SHOWN OFFSET FOR CLARITY.

PLOT DATE: 11/2/2022 9:50:26 AM

FOR BID ONLY

Teter, LLP expressly reserves its common law copyright and other property rights in these plans. This document, the ideas and designs incorporated herein, as an instrument of professional service, is not to be used in whole or in part, for any other project without prior written authorization.

MARK	DATE	DESCRIPTION
	11/1/22	DSA BACKCHECK

REGISTERED PROFESSIONAL ENGINEER — COREY M. STONE — No. E23953 — EXP. 6/30/23 — ELECTRICAL — STATE OF CALIFORNIA

TETER, LLP
ARCHITECTS ENGINEERS CONNECTED
FRESNO HEADQUARTERS
VISALIA | BAKERSFIELD | MODESTO | SAN LUIS OBISPO

TULARE CAMPUS CTE
COLLEGE OF THE SEQUOIAS
4999 E. BARDSLEY AVE.
TULARE, CA

DRAWING TITLE
POWER PLAN - BUILDING 'D'

PROJECT NO.
21-12032

DRAWING
E200

\\tet-file1\Users\corey.stone\Documents\12032-E-COS Tulare CTE_corey.stone.rvt

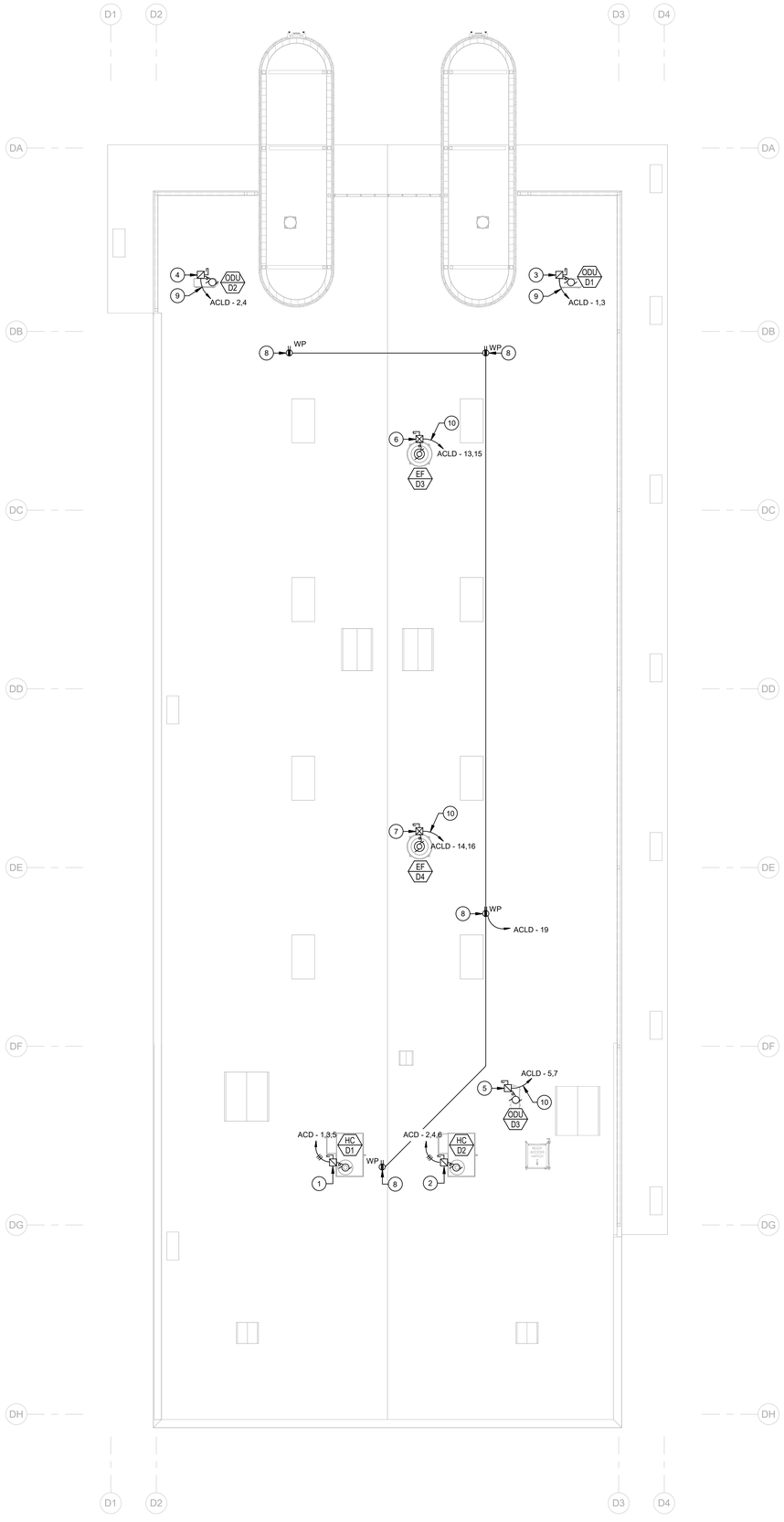

KEYNOTES

1. PROVIDE HEAVY DUTY WEATHERPROOF 600V, 30A, 3-POLE FUSED DISCONNECT. PROVIDE CONNECTION FOR 460V, 3ϕ, 12 FLA, 15 MCA, 20 MOCP, HEATING COOLING UNIT 'HC-D1'.
2. PROVIDE HEAVY DUTY WEATHERPROOF 600V, 30A, 3-POLE FUSED DISCONNECT. PROVIDE CONNECTION FOR 460V, 3ϕ, 12 FLA, 15 MCA, 20 MOCP, HEATING COOLING UNIT 'HC-D2'.
3. PROVIDE HEAVY DUTY WEATHERPROOF 250V, 60A, 3-POLE FUSED DISCONNECT. PROVIDE CONNECTION FOR 208V, 1ϕ, 21.0 FLA, 35 MCA, 50 MOCP, OUTDOOR UNIT 'ODU-D1'.
4. PROVIDE HEAVY DUTY WEATHERPROOF 250V, 60A, 3-POLE FUSED DISCONNECT. PROVIDE CONNECTION FOR 208V, 1ϕ, 21.0 FLA, 35 MCA, 50 MOCP, OUTDOOR UNIT 'ODU-D2'.
5. PROVIDE HEAVY DUTY WEATHERPROOF 250V, 30A, 3-POLE FUSED DISCONNECT. PROVIDE CONNECTION FOR 208V, 1ϕ, 15.3 FLA, 25 MCA, 35 MOCP, OUTDOOR UNIT 'ODU-D3'.
6. PROVIDE HEAVY DUTY WEATHERPROOF 250V, 60A, 1-POLE FUSED DISCONNECT WITH INTEGRAL MAGNETIC STARTER AND AUXILLARY CONTACTS TO ALLOW ON/OFF CONTROL THROUGH EMS SYSTEM. PROVIDE POWER CONNECTION FOR 208V, 1Φ, 2 HP EXHAUST FAN 'EF-D3'.
7. PROVIDE HEAVY DUTY WEATHERPROOF 250V, 60A, 1-POLE FUSED DISCONNECT WITH INTEGRAL MAGNETIC STARTER AND AUXILLARY CONTACTS TO ALLOW ON/OFF CONTROL THROUGH EMS SYSTEM. PROVIDE POWER CONNECTION FOR 208V, 1Φ, 2 HP EXHAUST FAN 'EF-D4'.
8. PROVIDE WEATHERPROOF GFCI RECEPTACLE LOCATED ON ROOF WITH 'IN-USE' TYPE COVER.
9. ONE 1"C WITH 2#8 CU THWN AND 1#10 CU GND.
10. ONE 1"C WITH 2#10 CU THWN AND 1#10 CU GND.

GENERAL NOTES

A. CONDUIT AND CONDUCTORS FOR NEW OUTLETS SHALL BE CONCEALED, U.O.N.

B. PENETRATIONS THROUGH WALLS, CEILINGS, FLOORS, AND/OR ROOFS SHALL BE SEALED.

C. ALL 120V, 15A AND 20A RECEPTACLES INSTALLED OUTDOORS SHALL BE GFCI TYPE RECEPTACLES.

NORTH

ROOF POWER PLAN - BUILDING 'D'

1/8" = 1'-0" | 1

PLOT DATE: 11/2/2022 9:50:29 AM

FOR BID ONLY

Teter, LLP expressly reserves its common law copyright and other property rights in these plans. This document, the ideas and designs incorporated herein, as an instrument of professional service, is not to be used in whole or part, for any other project without prior written authorization.

MARK	DATE	DESCRIPTION
	11/1/22	DSA BACKCHECK

TETER, LLP
ARCHITECTS ENGINEERS CONNECTED
FRESNO HEADQUARTERS
VISALIA | BAKERSFIELD | MODESTO | SAN LUIS OBISPO

TULARE CAMPUS CTE
COLLEGE OF THE SEQUOIAS
4999 E. BARDSLEY AVE.
TULARE, CA

DRAWING TITLE
ROOF POWER PLAN - BUILDING 'D'

PROJECT NO.
21-12032

DRAWING
E201

\\tet-file1\Users\corey.stone\Documents\12032-E-COS Tulare CTE_corey.stone.rvt

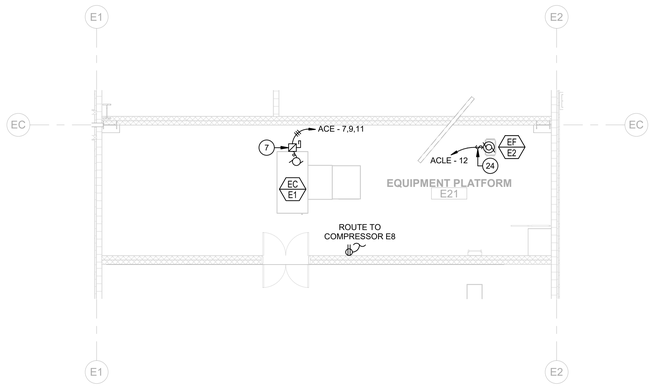

NORTH

BUILDING E MECHANICAL PLATFORM PLAN | 1/8" = 1'-0" | 2

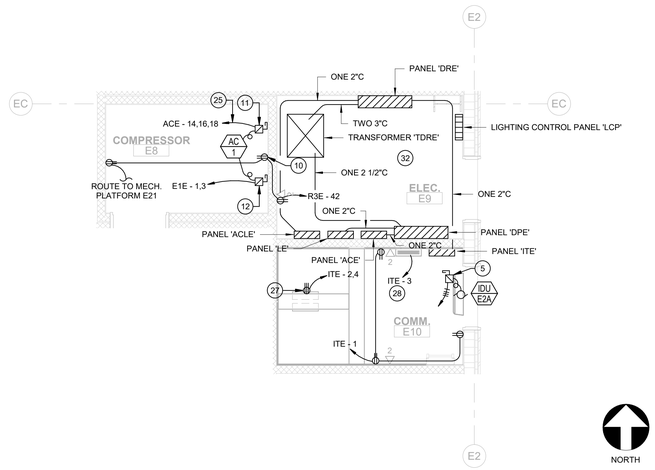

NORTH

POWER PLAN - BUILDING 'E' ENLARGEMENT | 1/4" = 1'-0" | 3

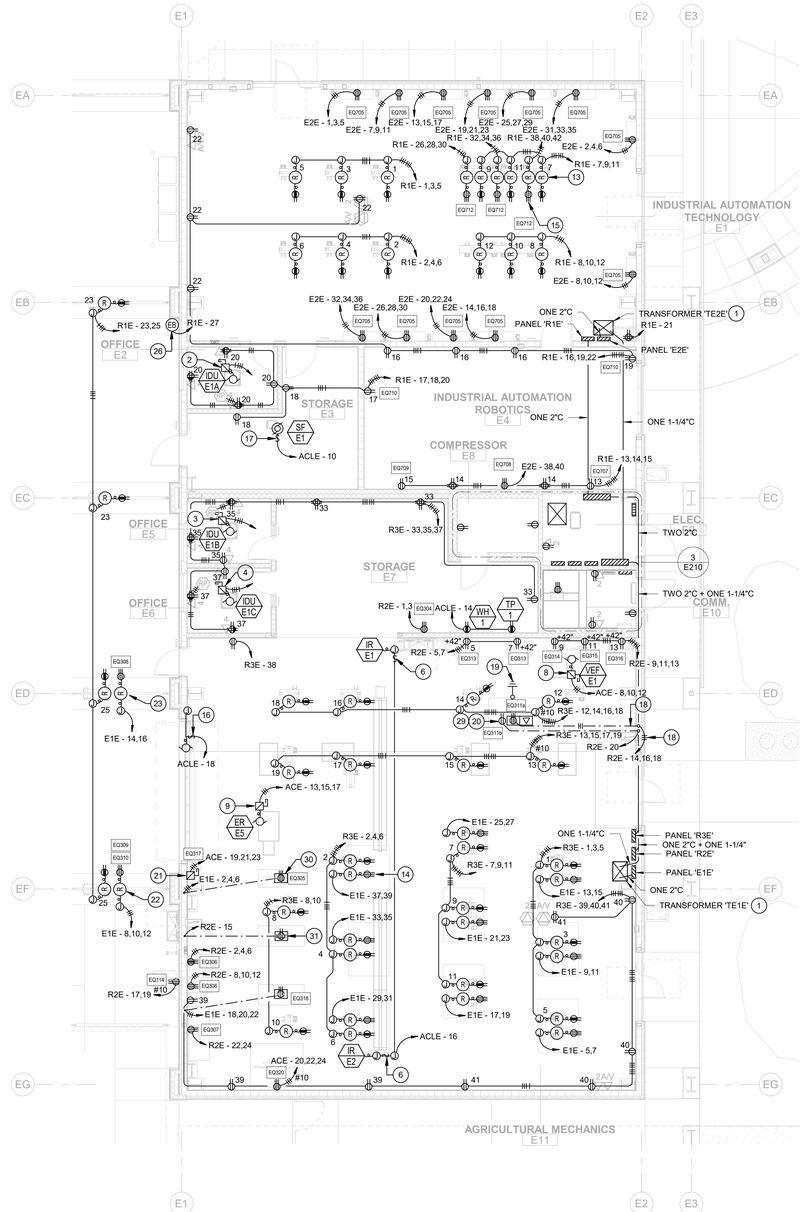

NORTH

POWER PLAN - BUILDING 'E' | 1/8" = 1'-0" | 1

KEYNOTES

1. TRANSFORMER MOUNTED TO WALL PER DETAIL 8/E600. SHOWN OFFSET ON DRAWING FOR CLARITY.
2. PROVIDE GENERAL DUTY 250V, 30A, 3-POLE FUSED DISCONNECT. PROVIDE CONNECTION FOR 208V, 1φ, 0.2 MCA, INDOOR UNIT 'IDU-E1A' FROM OUTDOOR UNIT 'ODU-E1'. INDOOR UNIT BRANCH CIRUIT SHALL CONSIST OF ONE 3/4"C WITH 3#12 CU THWN AND 1#12 CU GND.
3. PROVIDE GENERAL DUTY 250V, 30A, 3-POLE FUSED DISCONNECT. PROVIDE CONNECTION FOR 208V, 1φ, 0.2 MCA, INDOOR UNIT 'IDU-E1B' FROM OUTDOOR UNIT 'ODU-E1'. INDOOR UNIT BRANCH CIRUIT SHALL CONSIST OF ONE 3/4"C WITH 3#12 CU THWN AND 1#12 CU GND.
4. PROVIDE GENERAL DUTY 250V, 30A, 3-POLE FUSED DISCONNECT. PROVIDE CONNECTION FOR 208V, 1φ, 0.2 MCA, INDOOR UNIT 'IDU-E1C' FROM OUTDOOR UNIT 'ODU-E1'. INDOOR UNIT BRANCH CIRUIT SHALL CONSIST OF ONE 3/4"C WITH 3#12 CU THWN AND 1#12 CU GND.
5. PROVIDE GENERAL DUTY 250V, 30A, 3-POLE FUSED DISCONNECT. PROVIDE CONNECTION FOR 208V, 1φ, 0.63 MCA, INDOOR UNIT 'IDU-E2A' FROM OUTDOOR UNIT 'ODU-E2'. INDOOR UNIT BRANCH CIRUIT SHALL CONSIST OF ONE 3/4"C WITH 3#12 CU THWN AND 1#12 CU GND.
6. PROVIDE A/C SNAP SWITCH DISCONNECT LOCATED ADJACENT TO 120V, 1φ, 1.3 FLA INFRARED RADIANT HEATER.
7. PROVIDE HEAVY DUTY 600V, 30A, 3-POLE FUSED DISCONNECT. PROVIDE CONNECTION FOR 480V, 3φ, 7.5 HP, EVAPORATIVE COOLER 'EC-E1'.
8. PROVIDE GENERAL DUTY 600V, 30A, 3-POLE FUSED DISCONNECT. PROVIDE CONNECTION FOR 480V, 3φ, 1.5 HP, VEHICLE EXHAUST FAN, 'VEF-E1'.
9. PRROVIDE GENERAL DUTY 600V, 30A, 3-POLE FUSED DISCONNECT. PROVIDE CONNECTION FOR 480V, 3φ, 1 HP, VEHICLE EXHAUST FAN, 'ER-E5'.
10. PROVIDE 120V RECEPTACLE AT +48" FOR POWER TO ELECTRONIC TIMER DRAIN FOR EQUIPMENT 'AC-1'.
11. PRROVIDE GENERAL DUTY 600V, 60A, 3-POLE FUSED DISCONNECT. PROVIDE CONNECTION FOR 480V, 3φ, 25 HP, COMPRESSOR 'AC-1'.
12. PRROVIDE GENERAL DUTY 250V, 15A, 3-POLE FUSED DISCONNECT. PROVIDE CONNECTION FOR 240V, 1φ, 0.75 HP, COMPRESSOR DRYER 'AC-1'.
13. PROVIDE CORD REEL, REELCRAFT EQUIPMENT #L45451239G OR EQUIVALENT. CORD REELS SHALL BE MOUNTED PER ARCHITECTURAL PLANS. TYPICAL OF ALL NEMA 5-15R CORD REELS.
14. PROVIDE CORD REEL, REELCRAFT EQUIPMENT #L4500 OR EQUIVALENT WITH A 45', #12 SEOOW, 3 CONDUCTOR CABLE AND A NEMA L6-20R. CORD REELS SHALL BE MOUNTED PER ARCHITECTURAL PLANS. TYPICAL OF ALL SPECIAL PURPOSE CORD REELS IN 'AGRICULTURAL MECHANICS E11'.
15. PROVIDE CORD REEL, REELCRAFT EQUIPMENT #L7000 OR EQUIVALENT WITH A 35', #12 SJEOOW, 5 CONDUCTOR CABLE. CORD REELS SHALL BE MOUNTED PER ARCHITECTURAL PLANS. TYPICAL OF ALL SPECIAL PURPOSE CORD REELS IN 'INDUSTRIAL AUTOMATION TECHNOLOGY E1'.
16. PROVIDE A/C SNAP SWITCH DISCONNECT LOCATED ADJACENT TO OVERHEAD DOOR MOTOR. PROVIDE CONNECTION FOR 120V, 1φ, 1 HP OVERHEAD DOOR ELECTRIC OPERATOR. PROVIDE ONE 3/4"C.Ø. BETWEEN OPERATOR AND RECESSED JUNCTION BOX MOUNTED AT + 48"A.F.F TO TOP OF BOX TO FACILITATE DOOR CONTROL WIRING.
17. PROVIDE MOTOR RATED A/C SNAP SWITCH DISCONNECT. PROVIDE CONNECTION FOR 120V, 1φ, 1/15 HP, SUPPLY FAN 'SF-E1'. PROVIDE ADDITIONAL CONDUIT ROUTED TO ROOF TO INTERLOCK SUPPLY FAN WITH OUTDOOR UNIT 'ODU-E1'.
18. PROVIDE ONE 3/4"C, 3#8 CU THWN AND 1#10 CU GND FOR POWER CONNECTION TO EQ311a.
19. PROVIDE #6 CU THHN GND FROM STAR GROUND ON TABLE TO DEDICATED EARTH GROUND ROD.
20. DUPLEX RECEPTACLE MOUNTED IN FLOOR BOX. SHOWN OFFSET FOR CLARITY.
21. PRROVIDE GENERAL DUTY 600V, 30A, 3-POLE FUSED DISCONNECT. PROVIDE CONNECTION FOR 480V, 3φ, 9.9 FLA, 2.5 TON HOIST CRANE, 'EQ317'.
22. PROVIDE CORD REEL, REELCRAFT EQUIPMENT #L7000 OR EQUIVALENT WITH A 35', #8 SOOW, 4 CONDUCTOR CABLE. CORD REELS SHALL BE MOUNTED PER ARCHITECTURAL PLANS.
23. PROVIDE CORD REEL, REELCRAFT EQUIPMENT #L7000 OR EQUIVALENT WITH A 35', #6 SOOW, 4 CONDUCTOR CABLE. CORD REELS SHALL BE MOUNTED PER ARCHITECTURAL PLANS.
24. PROVIDE MOTOR RATED A/C SNAP SWITCH DISCONNECT. PROVIDE CONNECTION FOR 120V, 1φ, 146 WATTS, EXHAUST FAN 'EF-E2'.
25. ONE 1"C, 3#4 CU THWN AND 1#8 CU GND.
26. PROVIDE 120VAC POWER CONNECTION TO FIRE SPRINKLER RISER ELECTRIC BELL THROUGH AUXILIARY CONTACT AT WATERFLOW SWITCH. SOURCE CIRCUIT BREAKER SHALL HAVE A RED MECHANICAL LOCK-ON DEVICE.
27. PROVIDE RACK MOUNTED NEMA L6-20R RECEPTACLE PER DETAIL 4/E602.
28. PROVIDE DEDICATED 120VAC POWER CONNECTION TO FIRE ALARM TRANSPONDER PANEL. SOURCE PANEL AND CIRCUIT NUMBERS SHALL BE LABELED AT FIRE ALARM PANEL. SOURCE CIRCUIT BREAKER SHALL BE LABELED "FIRE ALARM/ECS" AND SHALL HAVE A RED MECHANICAL LOCK-ON DEVICE.
29. PROVIDE WIREMOLD #RFB9-OG FLOOR BOX WITH RFB119CTCAL TOP GUARD, ONE RFB119-SR3 DEVICE PLATE, ONE RFB119-SD DEVICE PLATE, ONE RFB119-2SAB DEVICE PLATE, AND PROVIDE BLANK FACE PLATES FOR ALL UNUSED SPACES.
30. PROVIDE WIREMOLD #RFB9-OG FLOOR BOX WITH RFB119CTCAL TOP GUARD, ONE RFB119-SR2 DEVICE PLATE AND PROVIDE BLANK FACE PLATES FOR ALL UNUSED SPACES, TYPICAL FOR ALL SPECIAL PURPOSE RECEPTACLE FLOOR BOXES IN THIS ROOM U. O. N.
31. PROVIDE WIREMOLD #RFB9-OG FLOOR BOX WITH RFB119CTCAL TOP GUARD, TWO RFB119-D DEVICE PLATE AND PROVIDE BLANK FACE PLATES FOR ALL UNUSED SPACES, TYPICAL FOR ALL QUADRAPLEX RECEPTACLE FLOOR BOXES IN THIS ROOM U. O. N.
32. CONDUITS IN THIS ROOM TO BE SECURED TO WALLS. SHOWN OFFSET FOR CLARITY.

GENERAL NOTES

A. PROVIDE ELECTRICAL FEEDERS PER SINGLE LINE DIAGRAM.

B. CONDUIT AND CONDUCTORS FOR NEW OUTLETS SHALL BE CONCEALED, U.O.N.

C. PENETRATIONS THROUGH WALLS, CEILINGS, FLOORS, AND/OR ROOFS SHALL BE SEALED.

D. ALL 120V, 15A AND 20A RECEPTACLES WITHIN RESTROOMS SHALL BE GFCI TYPE RECEPTACLES. IN ALL OTHER SPACES, 120V, 15A AND 20A RECEPTACLES WITHIN 6' OF SINKS OR FAUCETS SHALL BE GFCI TYPE RECEPTACLES.

E. REFER TO E801 FOR EQUIPMENT SCHEDULE SHOWING SPECIAL RECEPTACLE REQUIRMENTS.

F. ALL EXPOSED CONDUIT IN ROOMS WITH NO CEILINGS SHALL BE ROUTED PARALLEL OR PERPENDICULAR TO TRUSSES AND GIRDERS. LINES SHOWN AS SPLINES AND ARCS ARE FOR DIAGRAMATIC PURPOSES ONLY.

G. REFER TO PANEL SCHEDULES ON SHEETS E810-E813 FOR REFERENCE TO THE APPROPRIATE PANEL MOUNTING DETAIL ON E600.

H. REFER TO TRANSFORMER SCHEDULE ON SHEET E800 FOR REFERENCE TO THE APPROPRIATE MOUNTING DETAIL ON E600.

FOR BID ONLY

Teter, LLP expressly reserves its common law copyright and other property rights in these plans. This document, the ideas and designs incorporated herein, as an instrument of professional service, is not to be used in whole or in part, for any other project without prior written authorization.

MARK	DATE	DESCRIPTION
	11/1/22	DSA BACKCHECK

TETER, LLP
ARCHITECTS ENGINEERS CONNECTED
FRESNO HEADQUARTERS
VISALIA | BAKERSFIELD | MODESTO | SAN LUIS OBISPO

TULARE CAMPUS CTE
COLLEGE OF THE SEQUOIAS
4999 E. BARDSLEY AVE.
TULARE, CA

DRAWING TITLE
POWER PLAN - BUILDING 'E'

PROJECT NO.
21-12032

DRAWING
E210

PLOT DATE: 11/2/2022 9:50:40 AM

\\tet-file1\Users\corey.stone\Documents\12032-E-COS Tulare CTE_corey.stone.rvt

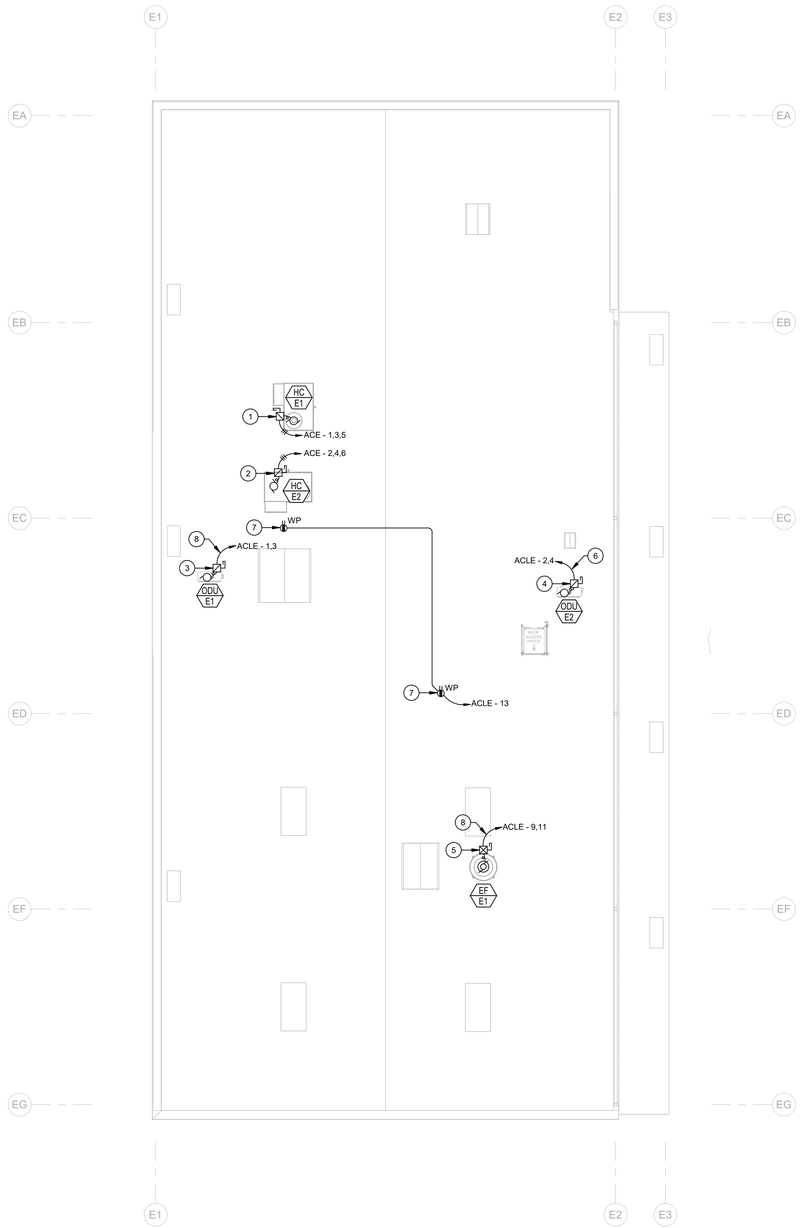

KEYNOTES

1. PROVIDE HEAVY DUTY WEATHERPROOF 600V, 30A, 3-POLE FUSED DISCONNECT. PROVIDE CONNECTION FOR 480V, 3ϕ, 12.1 FLA, 15 MCA, 20 MOCP, HEATING COOLING UNIT 'HC-E1'.
2. PROVIDE HEAVY DUTY WEATHERPROOF 600V, 30A, 3-POLE FUSED DISCONNECT. PROVIDE CONNECTION FOR 480V, 3ϕ, 8.7 FLA, 11 MCA, 15 MOCP, HEATING COOLING UNIT 'HC-E2'.
3. PROVIDE HEAVY DUTY WEATHERPROOF 250V, 60A, 3-POLE FUSED DISCONNECT. PROVIDE CONNECTION FOR 208V, 1ϕ, 19.0 FLA, 30 MCA, 45 MOCP, OUTDOOR UNIT 'ODU-E1'.
4. PROVIDE HEAVY DUTY WEATHERPROOF 250V, 30A, 3-POLE FUSED DISCONNECT. PROVIDE CONNECTION FOR 208V, 1ϕ, 15.3 FLA, 25 MCA, 35 MOCP, OUTDOOR UNIT 'ODU-E2'.
5. PROVIDE HEAVY DUTY WEATHERPROOF 250V, 60A, 3-POLE FUSED DISCONNECT WITH INTEGRAL MAGNETIC STARTER AND AUXILLARY CONTACTS TO ALLOW ON/OFF CONTROL THROUGH EMS SYSTEM. PROVIDE POWER CONNECTION FOR 208V, 1Φ, 2 HP EXHAUST FAN 'EF-E1'.
6. ONE 1"C WITH 2#10 CU THWN AND 1#10 CU GND.
7. PROVIDE WEATHERPROOF GFCI RECEPTACLE LOCATED ON ROOF WITH 'IN-USE' TYPE COVER.
8. ONE 1"C WITH 2#8 CU THWN AND 1#10 CU GND.

GENERAL NOTES

A. CONDUIT AND CONDUCTORS FOR NEW OUTLETS SHALL BE CONCEALED, U.O.N.

B. PENETRATIONS THROUGH WALLS, CEILINGS, FLOORS, AND/OR ROOFS SHALL BE SEALED.

C. ALL 120V, 15A AND 20A RECEPTACLES INSTALLED OUTDOORS SHALL BE GFCI TYPE RECEPTACLES.

NORTH

ROOF POWER PLAN - BUILDING 'E'

1/8" = 1'-0" | 1

PLOT DATE: 11/2/2022 9:50:42 AM

FOR BID ONLY

Teter, LLP expressly reserves its common law copyright and other property rights in these plans. This document, the ideas and designs incorporated herein, as an instrument of professional service, is not to be used in whole or part, for any other project without prior written authorization.

MARK	DATE	DESCRIPTION
	11/1/22	DSA BACKCHECK

TETER, LLP
FRESNO HEADQUARTERS
VISALIA | BAKERSFIELD | MODESTO | SAN LUIS OBISPO
ARCHITECTS ENGINEERS CONNECTED

TULARE CAMPUS CTE
COLLEGE OF THE SEQUOIAS
4999 E. BARDSLEY AVE.
TULARE, CA

DRAWING TITLE
ROOF POWER PLAN - BUILDING 'E'

PROJECT NO.
21-12032

DRAWING
E211

\\tet-file1\Users\corey.stone\Documents\12032-E-COS Tulare CTE_corey.stone.rvt

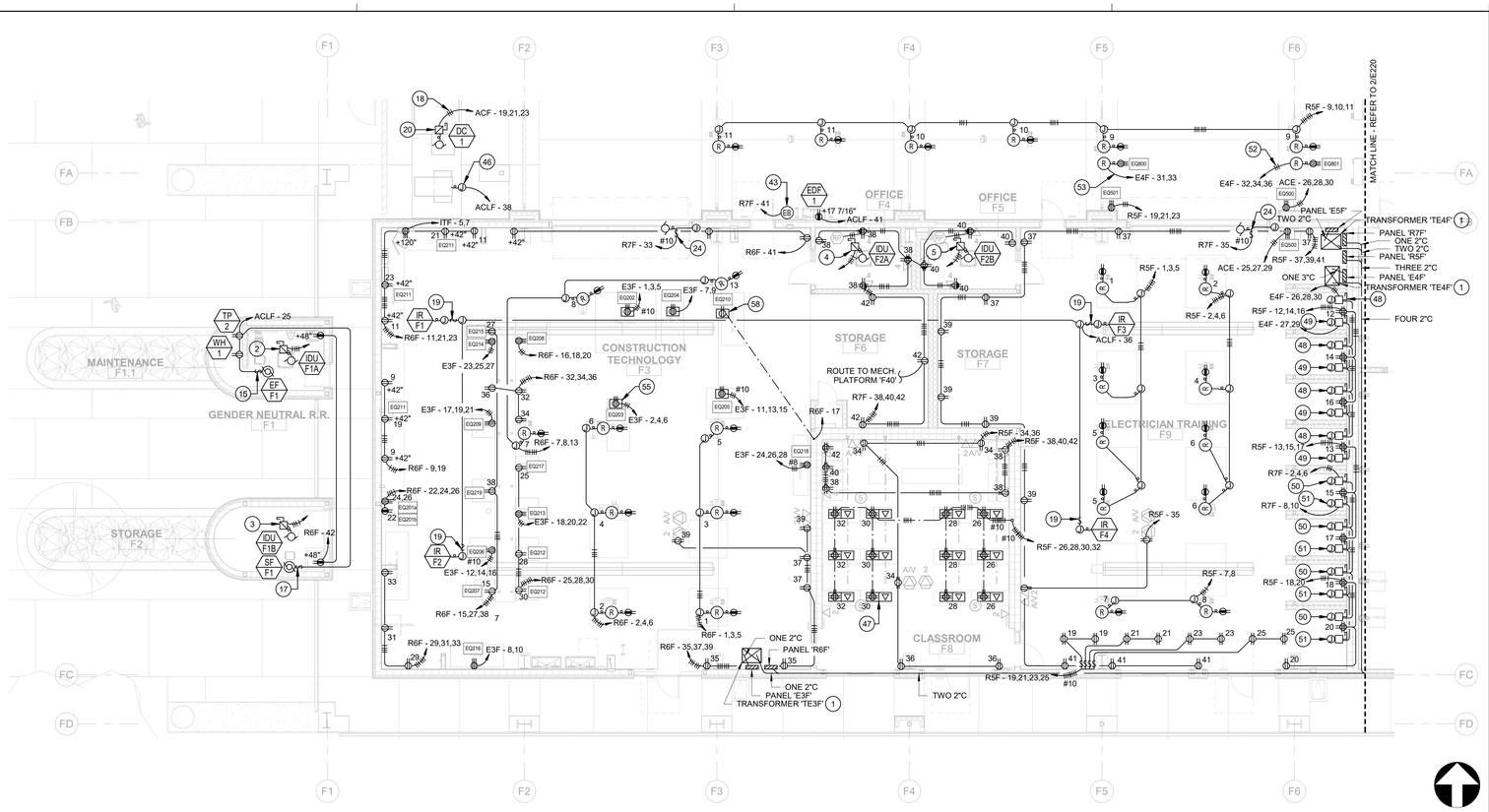

POWER PLAN - BUILDING 'F' (WEST)

1/8" = 1'-0" | 1

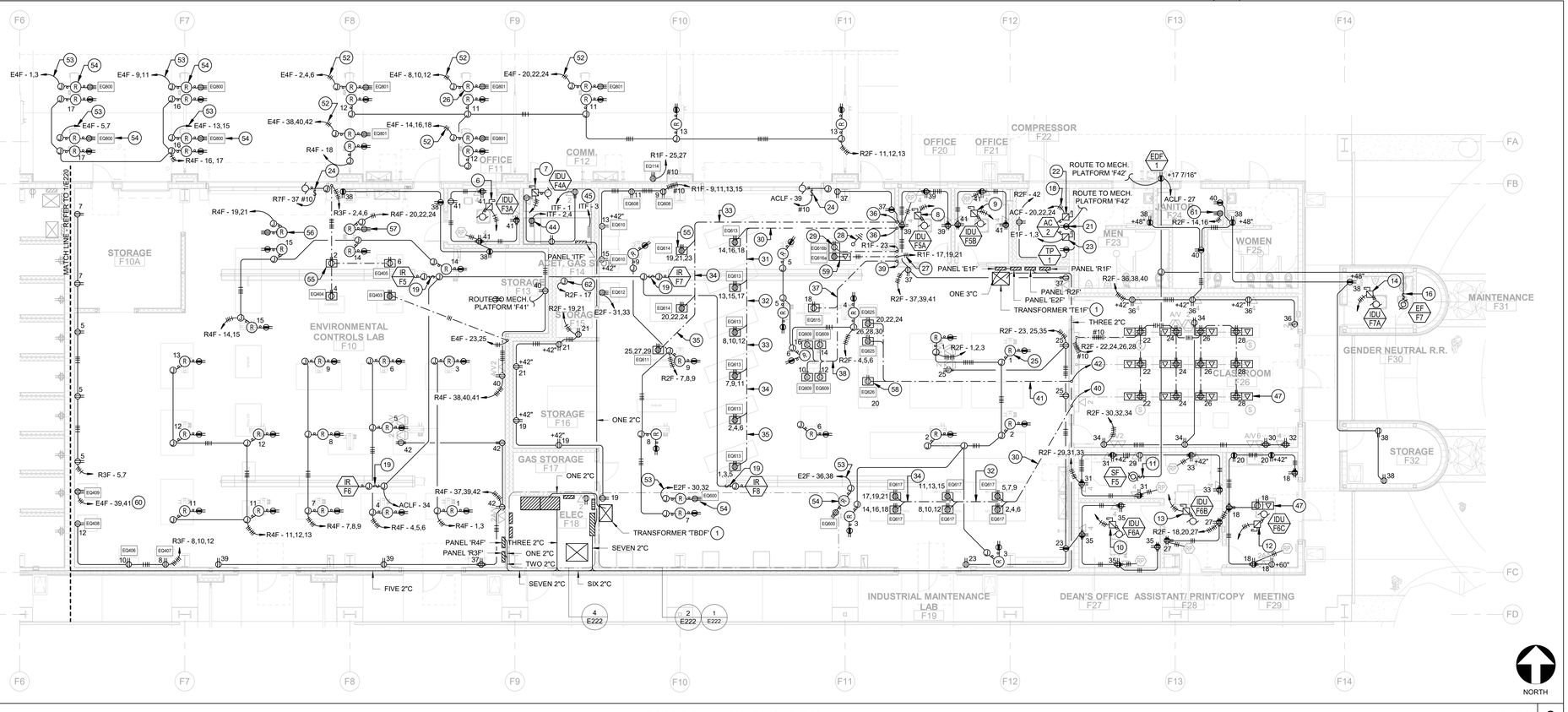

POWER PLAN - BUILDING 'F' (EAST)

1/8" = 1'-0" | 2

KEYNOTES

1. TRANSFORMER MOUNTED TO WALL PER DETAIL 8/E600. SHOWN OFFSET ON DRAWING FOR CLARITY.
2. PROVIDE GENERAL DUTY 250V, 30A, 3-POLE FUSED DISCONNECT. PROVIDE CONNECTION FOR 208V, 1ϕ, 0.2 MCA, INDOOR UNIT 'IDU-F1A' FROM OUTDOOR UNIT 'ODU-F1'. INDOOR UNIT BRANCH CIRUIT SHALL CONSIST OF ONE 3/4"C WITH 3#12 CU THWN AND 1#12 CU GND.
3. PROVIDE GENERAL DUTY 250V, 30A, 3-POLE FUSED DISCONNECT. PROVIDE CONNECTION FOR 208V, 1ϕ, 0.2 MCA, INDOOR UNIT 'IDU-F1B' FROM OUTDOOR UNIT 'ODU-F1'. INDOOR UNIT BRANCH CIRUIT SHALL CONSIST OF ONE 3/4"C WITH 3#12 CU THWN AND 1#12 CU GND.
4. PROVIDE GENERAL DUTY 250V, 30A, 3-POLE FUSED DISCONNECT. PROVIDE CONNECTION FOR 208V, 1ϕ, 0.2 MCA, INDOOR UNIT 'IDU-F2A' FROM OUTDOOR UNIT 'ODU-F2'. INDOOR UNIT BRANCH CIRUIT SHALL CONSIST OF ONE 3/4"C WITH 3#12 CU THWN AND 1#12 CU GND.
5. PROVIDE GENERAL DUTY 250V, 30A, 3-POLE FUSED DISCONNECT. PROVIDE CONNECTION FOR 208V, 1ϕ, 0.2 MCA, INDOOR UNIT 'IDU-F2B' FROM OUTDOOR UNIT 'ODU-F2'. INDOOR UNIT BRANCH CIRUIT SHALL CONSIST OF ONE 3/4"C WITH 3#12 CU THWN AND 1#12 CU GND.
6. PROVIDE GENERAL DUTY 250V, 30A, 3-POLE FUSED DISCONNECT. PROVIDE CONNECTION FOR 208V, 1ϕ, 0.2 MCA, INDOOR UNIT 'IDU-F3A' FROM OUTDOOR UNIT 'ODU-F3'. INDOOR UNIT BRANCH CIRUIT SHALL CONSIST OF ONE 3/4"C WITH 3#12 CU THWN AND 1#12 CU GND.
7. PROVIDE GENERAL DUTY 250V, 30A, 3-POLE FUSED DISCONNECT. PROVIDE CONNECTION FOR 208V, 1ϕ, 0.63 MCA, INDOOR UNIT 'IDU-F4A' FROM OUTDOOR UNIT 'ODU-F4'. INDOOR UNIT BRANCH CIRUIT SHALL CONSIST OF ONE 3/4"C WITH 3#12 CU THWN AND 1#12 CU GND.
8. PROVIDE GENERAL DUTY 250V, 30A, 3-POLE FUSED DISCONNECT. PROVIDE CONNECTION FOR 208V, 1ϕ, 0.2 MCA, INDOOR UNIT 'IDU-F5A' FROM OUTDOOR UNIT 'ODU-F5'. INDOOR UNIT BRANCH CIRUIT SHALL CONSIST OF ONE 3/4"C WITH 3#12 CU THWN AND 1#12 CU GND.
9. PROVIDE GENERAL DUTY 250V, 30A, 3-POLE FUSED DISCONNECT. PROVIDE CONNECTION FOR 208V, 1ϕ, 0.2 MCA, INDOOR UNIT 'IDU-F5B' FROM OUTDOOR UNIT 'ODU-F5'. INDOOR UNIT BRANCH CIRUIT SHALL CONSIST OF ONE 3/4"C WITH 3#12 CU THWN AND 1#12 CU GND.
10. PROVIDE GENERAL DUTY 250V, 30A, 3-POLE FUSED DISCONNECT. PROVIDE CONNECTION FOR 208V, 1ϕ, 1.11 MCA, INDOOR UNIT 'IDU-F6A' FROM OUTDOOR UNIT 'ODU-F6'. INDOOR UNIT BRANCH CIRUIT SHALL CONSIST OF ONE 3/4"C WITH 3#12 CU THWN AND 1#12 CU GND.
11. PROVIDE MOTOR RATED A/C SNAP SWITCH DISCONNECT. PROVIDE CONNECTION FOR 120V, 1ϕ, 1/10 HP, SUPPLY FAN 'SF-F5'. PROVIDE ADDITIONAL CONDUIT ROUTED TO ROOF TO INTERLOCK SUPPLY FAN WITH OUTDOOR UNIT 'ODU-F6'.
12. PROVIDE GENERAL DUTY 250V, 30A, 3-POLE FUSED DISCONNECT. PROVIDE CONNECTION FOR 208V, 1ϕ, 1.2 MCA, INDOOR UNIT 'IDU-F6C' FROM OUTDOOR UNIT 'ODU-F6'. INDOOR UNIT BRANCH CIRUIT SHALL CONSIST OF ONE 3/4"C WITH 3#12 CU THWN AND 1#12 CU GND.
13. PROVIDE GENERAL DUTY 250V, 30A, 3-POLE FUSED DISCONNECT. PROVIDE CONNECTION FOR 208V, 1ϕ, 1.2 MCA, INDOOR UNIT 'IDU-F6B' FROM OUTDOOR UNIT 'ODU-F6'. INDOOR UNIT BRANCH CIRUIT SHALL CONSIST OF ONE 3/4"C WITH 3#12 CU THWN AND 1#12 CU GND.
14. PROVIDE GENERAL DUTY 250V, 30A, 3-POLE FUSED DISCONNECT. PROVIDE CONNECTION FOR 208V, 1ϕ, 0.2 MCA, INDOOR UNIT 'IDU-F7A' FROM OUTDOOR UNIT 'ODU-F7'. INDOOR UNIT BRANCH CIRUIT SHALL CONSIST OF ONE 3/4"C WITH 3#12 CU THWN AND 1#12 CU GND.
15. PROVIDE MOTOR RATED A/C SNAP SWITCH DISCONNECT. PROVIDE CONNECTION FOR 120V, 1ϕ, 54 WATT, EXHAUST FAN 'EF-F1'.
16. PROVIDE MOTOR RATED A/C SNAP SWITCH DISCONNECT. PROVIDE CONNECTION FOR 120V, 1ϕ, 54 WATT, EXHAUST FAN 'EF-F7'.
17. PROVIDE MOTOR RATED A/C SNAP SWITCH DISCONNECT. PROVIDE CONNECTION FOR 120V, 1ϕ, 1/15 HP, SUPPLY FAN 'SF-F1'. PROVIDE ADDITIONAL CONDUIT ROUTED TO ROOF TO INTERLOCK SUPPLY FAN WITH OUTDOOR UNIT 'ODU-F1'.
18. ONE 1 1/4"C WITH 3#4 CU THWN AND 1#8 CU GND.
19. PROVIDE A/C SNAP SWITCH DISCONNECT LOCATED ADJACENT TO 120V, 1ϕ, 1.3 FLA INFRARED RADIANT HEATER.
20. PROVIDE HEAVY DUTY WEATHERPROOF 600V, 100A, 3-POLE FUSED DISCONNECT. PROVIDE CONNECTION FOR 480V, 3ϕ, DUST COLLECTOR 'DC-1' THROUGH REMOTE VFD MOTOR CONTROLLER.
21. PROVIDE 120V RECEPTACLE AT +48" FOR POWER TO ELECTRONIC TIMER DRAIN FOR EQUIPMENT 'AC-2'.
22. PRROVIDE GENERAL DUTY 600V, 60A, 3-POLE FUSED DISCONNECT. PROVIDE CONNECTION FOR 480V, 3ϕ, 25 HP, COMPRESSOR 'AC-2'.
23. PROVIDE GENERAL DUTY 250V, 15A, 3-POLE FUSED DISCONNECT PROVIDE CONNECTION FOR 240V, 1ϕ, 0.75 HP, COMPRESSOR DRYER 'AC-2'.
24. PROVIDE A/C SNAP SWITCH DISCONNECT LOCATED ADJACENT TO OVERHEAD DOOR MOTOR. PROVIDE CONNECTION FOR 120V, 1ϕ, 1 HP OVERHEAD DOOR ELECTRIC OPERATOR. PROVIDE ONE 3/4"C Ø BETWEEN OPERATOR AND RECESSED JUNCTION BOX MOUNTED AT + 48"A.F.F TO TOP OF BOX TO FACILITATE DOOR CONTROL WIRING.
25. PROVIDE CORD REEL, REELCRAFT EQUIPMENT #L454513239G OR EQUIVALENT. CORD REELS SHALL BE MOUNTED PER ARCHITECTURAL PLANS. TYPICAL OF ALL NEMA 5-15R CORD REELS.
26. PROVIDE CORD REEL, REELCRAFT EQUIPMENT #L7000 OR EQUIVALENT WITH A 35', #6 SOOW, 4 CONDUCTOR CABLE. CORD REELS SHALL BE MOUNTED PER ARCHITECTURAL PLANS. TYPICAL OF ALL CORD REELS, 'EQ801'.
27. PROVIDE ONE 3/4"C, 3#8 CU THWN AND 1#10 CU GND FOR POWER CONNECTION TO EQ616a.
28. PROVIDE #6 CU THHN GND FROM STAR GROUND ON TABLE TO DEDICATED EARTH GROUND ROD.
29. DUPLEX RECEPTACLE MOUNTED IN FLOOR BOX. SHOWN OFFSET FOR CLARITY.
30. PROVIDE SIX 1"C WITH 3#10 CU THWN AND 1#10 CU GND IN EACH.
31. PROVIDE FIVE 1"C WITH 3#10 CU THWN AND 1#10 CU GND IN EACH.
32. PROVIDE FOUR 1"C WITH 3#10 CU THWN AND 1#10 CU GND IN EACH.
33. PROVIDE THREE 1"C WITH 3#10 CU THWN AND 1#10 CU GND IN EACH.
34. PROVIDE TWO 1"C WITH 3#10 CU THWN AND 1#10 CU GND IN EACH.
35. PROVIDE ONE 1"C WITH 3#10 CU THWN AND 1#10 CU GND.
36. ROUTE ALL 1"C FROM PANEL 'E2F' TO FLOOR BOXES SUPPORTING EQUIPMENT, 'EQ613' AND 'EQ614'.
37. PROVIDE FIVE 1"C WITH 2#12 CU THWN AND 1#12 CU GND IN EACH.
38. PROVIDE FOUR 1"C WITH 2#12 CU THWN AND 1#12 CU GND IN EACH.
39. ROUTE ALL 1"C FROM PANEL 'R1F' TO FLOOR BOXES SUPPORTING EQUIPMENT, 'EQ615' AND 'EQ609'.
40. ROUTE ALL 1"C FROM PANEL 'E1F' TO FLOOR BOXES SUPPORTING EQUIPMENT, 'EQ617'.
41. PROVIDE TWO 1"C WITH 3#12 CU THWN AND 1#12 CU GND IN EACH CONDUIT TO ROUTE TO TWO FLOOR BOXS FOR 'EQ625' AND ONE 1"C WITH 2#12 CU THWN AND 1#12 CU GND IN CONDUIT TO ROUTE TO FLOOR BOX FOR 'EQ626'.
42. ROUTE CONDUIT FOR 'EQ626' BACK TO PANEL 'R1F' AND CONDUIT FOR TWO 'EQ625' TO PANEL 'E1F'.
43. PROVIDE 120VAC POWER CONNECTION TO FIRE SPRINKLER RISER ELECTRIC BELL THROUGH AUXILIARY CONTACT AT WATERFLOW SWITCH. SOURCE CIRCUIT BREAKER SHALL HAVE A RED MECHANICAL LOCK-ON DEVICE.
44. PROVIDE RACK MOUNTED NEMA L6-20R RECEPTACLE PER DETAIL 4/E602.
45. PROVIDE DEDICATED 120VAC POWER CONNECTION TO FIRE ALARM TRANSPONDER PANEL. SOURCE PANEL AND CIRCUIT NUMBERS SHALL BE LABELED AT FIRE ALARM PANEL. SOURCE CIRCUIT BREAKER SHALL BE LABELED "FIRE ALARMECS" AND SHALL HAVE A RED MECHANICAL LOCK-ON DEVICE.
46. PROVIDE POWER CONNECTION TO 120V, 1Φ DUST COLLECTOR ABORT GATE.
47. PROVIDE WIREMOLD #RFB9-OG FLOOR BOX WITH RFB119CTCAL TOP GUARD, ONE RFB119-2SAB DEVICE PLATES, TWO RFB119-SD DEVICE PLATES AND PROVIDE BLANK FACE PLATES FOR ALL UNUSED SPACES, TYPICAL FOR ALL FLOOR BOXES IN THIS ROOM.
48. PROVIDE GENERAL DUTY 250V, 30A, 3-POLE DISCONNECT. PROVIDE CONNECTION FOR 240V, 3ϕ AT ELECTRICAL TRAINING BOOTH.
49. PROVIDE GENERAL DUTY 250V, 30A, 3-POLE DISCONNECT. PROVIDE CONNECTION FOR 240V, 1ϕ AT ELECTRICAL TRAINING BOOTH.
50. PROVIDE GENERAL DUTY 250V, 30A, 3-POLE DISCONNECT. PROVIDE CONNECTION FOR 208V, 3ϕ AT ELECTRICAL TRAINING BOOTH.
51. PROVIDE GENERAL DUTY 250V, 30A, 3-POLE DISCONNECT. PROVIDE CONNECTION FOR 208V, 1ϕ AT ELECTRICAL TRAINING BOOTH.
52. ONE 1"C WITH 3#6 CU THWN AND 1#6 CU GND.
53. ONE 1"C WITH 2#6 CU THWN AND 1#6 CU GND.
54. PROVIDE CORD REEL, REELCRAFT EQUIPMENT #L7000 OR EQUIVALENT WITH A 35', #6 SOOW, 3 CONDUCTOR CABLE. CORD REELS SHALL BE MOUNTED PER ARCHITECTURAL PLANS. TYPICAL OF ALL CORD REELS, 'EQ800' and 'EQ600'.
55. PROVIDE WIREMOLD #RFB9-OG FLOOR BOX WITH RFB119CTCAL TOP GUARD, ONE RFB119-SR2 DEVICE PLATE AND PROVIDE BLANK FACE PLATES FOR ALL UNUSED SPACES, TYPICAL FOR ALL SPECIAL PURPOSE RECEPTACLE FLOOR BOXES IN THIS ROOM U. O. N.
56. PROVIDE CORD REEL, REELCRAFT EQUIPMENT #L4545123X OR EQUIVALENT WITH A 45', #12 SJEOOW, 3 CONDUCTOR CABLE. CORD REELS SHALL BE MOUNTED PER ARCHITECTURAL PLANS. PROVIDE NEMA L6-20R ON CORD END.
57. PROVIDE CORD REEL, REELCRAFT EQUIPMENT #L5550124X OR EQUIVALENT WITH A 50', #12 SEOOW, 4 CONDUCTOR CABLE. CORD REELS SHALL BE MOUNTED PER ARCHITECTURAL PLANS. PROVIDE NEMA L15-20R ON CORD END.
58. PROVIDE WIREMOLD #RFB9-OG FLOOR BOX WITH RFB119CTCAL TOP GUARD, ONE RFB119-SD DEVICE PLATE AND PROVIDE BLANK FACE PLATES FOR ALL UNUSED SPACES.
59. PROVIDE WIREMOLD #RFB9-OG FLOOR BOX WITH RFB119CTCAL TOP GUARD, ONE RFB119-SR3 DEVICE PLATE, ONE RFB119-SD DEVICE PLATE, ONE RFB119-2SAB DEVICE PLATE, AND PROVIDE BLANK FACE PLATES FOR ALL UNUSED SPACES.
60. ONE 1 1/4"C WITH 3#2 CU THWN AND 1#6 CU GND.
61. PROVIDE ONE 3/4"C WITH 3#10 CU THWN AND 1#10 CU GND AND A NEMA 14-30R RECEPTACLE FOR AN ELECTRIC DRYER CONNECTION.
62. PROVIDE 120V, 1ϕ POWER CONNECTION TO FIRE SMOKE DAMPER. ROUTE BRANCH CIRCUIT THROUGH FIRE ALARM CONTROL RELAY CONTACTS PER DETAIL 13/E602.

GENERAL NOTES

A. PROVIDE ELECTRICAL FEEDERS PER SINGLE LINE DIAGRAM.

B. CONDUIT AND CONDUCTORS FOR NEW OUTLETS SHALL BE CONCEALED, U.O.N.

C. PENETRATIONS THROUGH WALLS, CEILINGS, FLOORS, AND/OR ROOFS SHALL BE SEALED.

D. ALL 120V, 15A AND 20A RECEPTACLES WITHIN KITCHENS AND RESTROOMS SHALL BE GFCI TYPE RECEPTACLES. IN ALL OTHER SPACES, 120V, 15A AND 20A RECEPTACLES WITHIN 6' OF SINKS OR FAUCETS SHALL BE GFCI TYPE RECEPTACLES.

E. REFER TO E801 FOR EQUIPMENT SCHEDULE SHOWING SPECIAL RECEPTACLE REQUIRMENTS.

F. ALL EXPOSED CONDUIT IN ROOMS WITH NO CEILINGS SHALL BE ROUTED PARALLEL OR PERPENDICULAR TO TRUSSES AND GIRDERS. LINES SHOWN AS SPLINES AND ARCS ARE FOR DIAGRAMATIC PURPOSES ONLY.

G. REFER TO PANEL SCHEDULES ON SHEETS E810-E813 FOR REFERENCE TO THE APPROPRIATE PANEL MOUNTING DETAIL ON E600.

H. REFER TO TRANSFORMER SCHEDULE ON SHEET E800 FOR REFERENCE TO THE APPROPRIATE MOUNTING DETAIL ON E600.

FOR BID ONLY

Teter, LLP expressly reserves its common law copyright and other property rights in these plans. This document, the ideas and designs incorporated herein, as an instrument of professional service, is not to be used in whole or in part, for any other project without prior written authorization.

MARK	DATE	DESCRIPTION
	11/1/22	DSA BACKCHECK

TETER, LLP
ARCHITECTS ENGINEERS CONNECTED
FRESNO HEADQUARTERS
VISALIA | BAKERSFIELD | MODESTO | SAN LUIS OBISPO

TULARE CAMPUS CTE
COLLEGE OF THE SEQUOIAS
4999 E. BARDSLEY AVE.
TULARE, CA

DRAWING TITLE
POWER PLAN - BUILDING 'F'

PROJECT NO.
21-12032

DRAWING
E220

PLOT DATE: 11/2/2022 9:51:13 AM

\\tet-file1\Users\corey.stone\Documents\12032-E-COS Tulare CTE_corey.stone.rvt

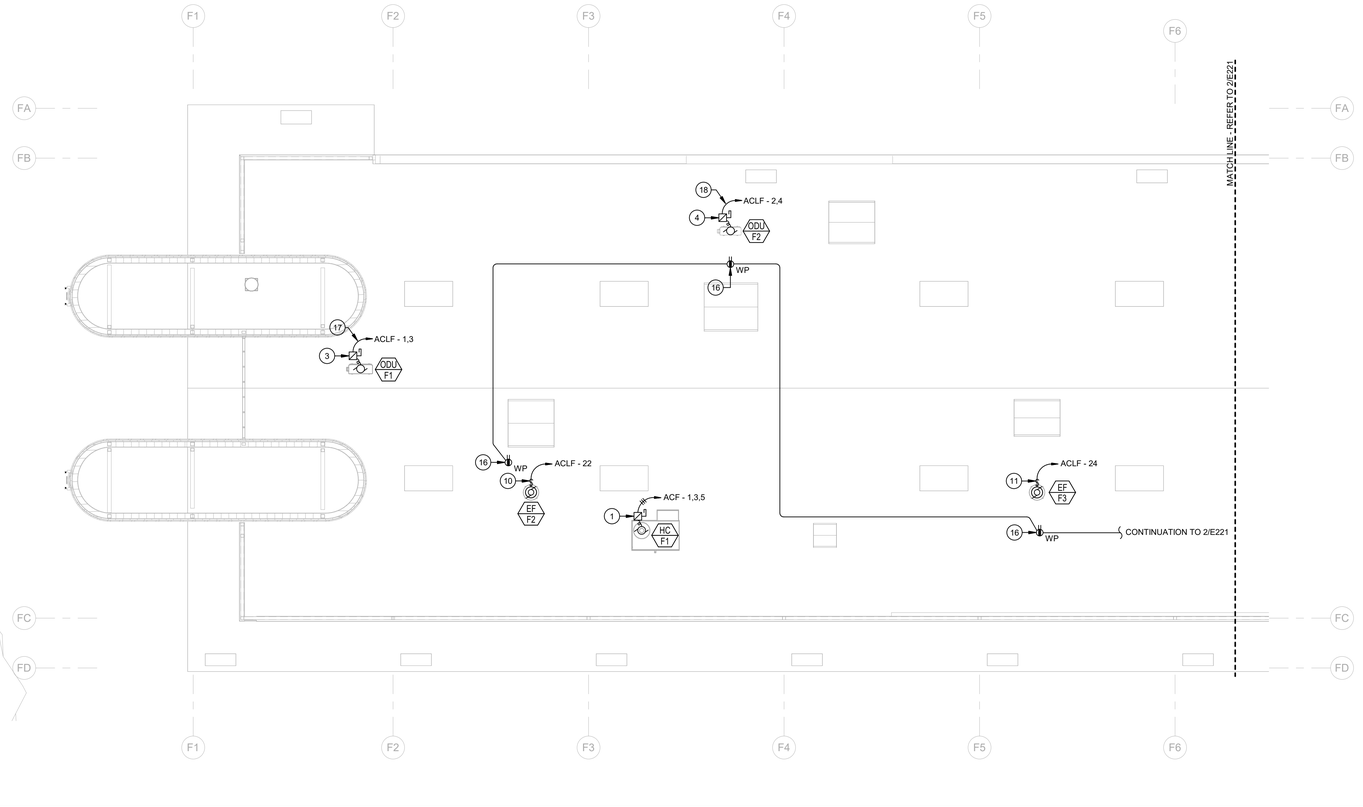

ROOF POWER PLAN - BUILDING 'F' (WEST)

1/8" = 1'-0" | 1

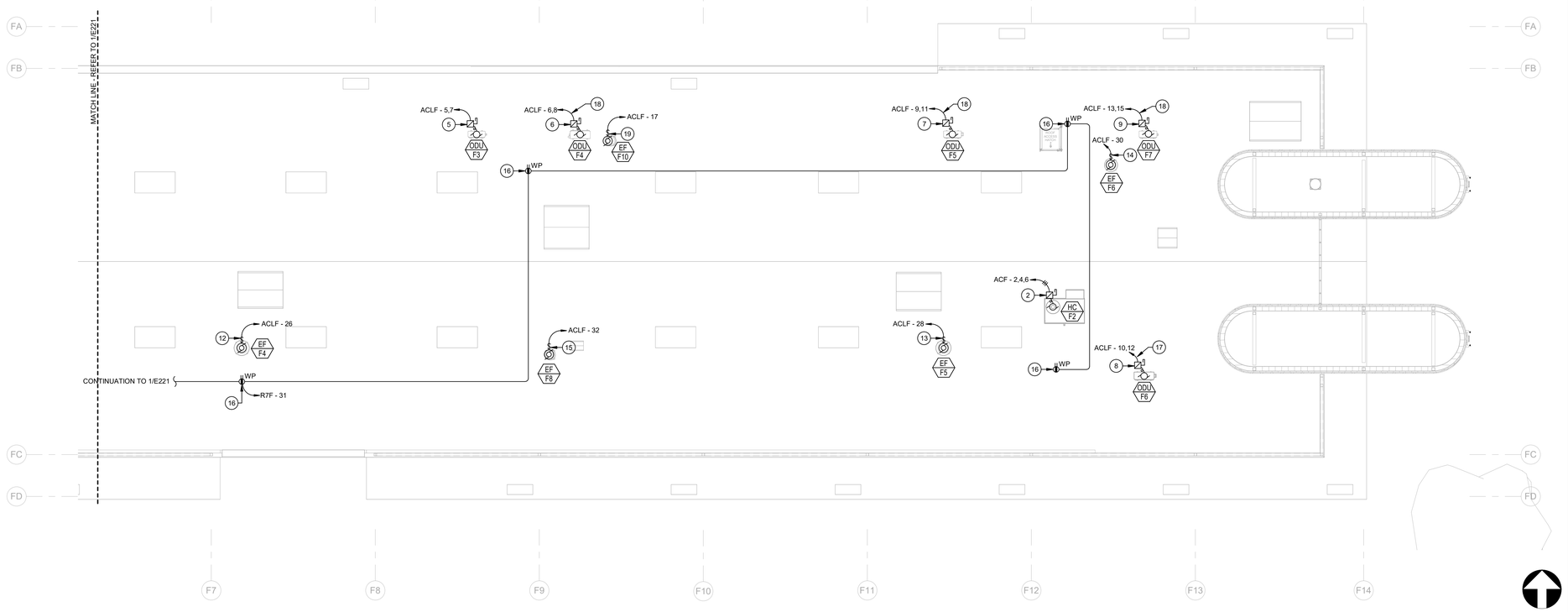

ROOF POWER PLAN - BUILDING 'F' (EAST)

1/8" = 1'-0" | 2

KEYNOTES

1. PROVIDE HEAVY DUTY WEATHERPROOF 600V, 30A, 3-POLE FUSED DISCONNECT. PROVIDE CONNECTION FOR 480V, 3ϕ, 12 FLA, 15 MCA, 20 MOCP, HEATING COOLING UNIT 'HC-F1'.
2. PROVIDE HEAVY DUTY WEATHERPROOF 600V, 30A, 3-POLE FUSED DISCONNECT. PROVIDE CONNECTION FOR 480V, 3ϕ, 12 FLA, 15 MCA, 20 MOCP, HEATING COOLING UNIT 'HC-F2'.
3. PROVIDE HEAVY DUTY WEATHERPROOF 250V, 60A, 3-POLE FUSED DISCONNECT. PROVIDE CONNECTION FOR 208V, 1ϕ, 19.0 FLA, 30 MCA, 45 MOCP, OUTDOOR UNIT 'ODU-F1'.
4. PROVIDE HEAVY DUTY WEATHERPROOF 250V, 30A, 3-POLE FUSED DISCONNECT. PROVIDE CONNECTION FOR 208V, 1ϕ, 10.0 FLA, 18 MCA, 25 MOCP, OUTDOOR UNIT 'ODU-F2'.
5. PROVIDE HEAVY DUTY WEATHERPROOF 250V, 30A, 3-POLE FUSED DISCONNECT. PROVIDE CONNECTION FOR 208V, 1ϕ, 6.0 FLA, 15 MCA, 15 MOCP, OUTDOOR UNIT 'ODU-F3'.
6. PROVIDE HEAVY DUTY WEATHERPROOF 250V, 30A, 3-POLE FUSED DISCONNECT. PROVIDE CONNECTION FOR 208V, 1ϕ, 15.3 FLA, 25 MCA, 35 MOCP, OUTDOOR UNIT 'ODU-F4'.
7. PROVIDE HEAVY DUTY WEATHERPROOF 250V, 30A, 3-POLE FUSED DISCONNECT. PROVIDE CONNECTION FOR 208V, 1ϕ, 10.0 FLA, 18 MCA, 25 MOCP, OUTDOOR UNIT 'ODU-F5'.
8. PROVIDE HEAVY DUTY WEATHERPROOF 250V, 60A, 3-POLE FUSED DISCONNECT. PROVIDE CONNECTION FOR 208V, 1ϕ, 21.0 FLA, 35 MCA, 50 MOCP, OUTDOOR UNIT 'ODU-F6'.
9. PROVIDE HEAVY DUTY WEATHERPROOF 250V, 30A, 3-POLE FUSED DISCONNECT. PROVIDE CONNECTION FOR 208V, 1ϕ, 14.3 FLA, 16 MCA, 25 MOCP, OUTDOOR UNIT 'ODU-F7'.
10. PROVIDE WEATHERPROOF MOTOR RATED A/C SNAP SWITCH DISCONNECT. PROVIDE CONNECTION FOR 115V, 1ϕ, 0.5 HP, EXHAUST FAN 'EF-F2'. PROVIDE RELAY AND ROUTE EXHAUST FAN BRANCH CIRCUIT THROUGH RELAY FOR ON/OFF CONTROL THROUGH EMS SYSTEM.
11. PROVIDE WEATHERPROOF MOTOR RATED A/C SNAP SWITCH DISCONNECT. PROVIDE CONNECTION FOR 120V, 1ϕ, 0.25 HP, EXHAUST FAN 'EF-F3'. PROVIDE RELAY AND ROUTE EXHAUST FAN BRANCH CIRCUIT THROUGH RELAY FOR ON/OFF CONTROL THROUGH EMS SYSTEM.
12. PROVIDE WEATHERPROOF MOTOR RATED A/C SNAP SWITCH DISCONNECT. PROVIDE CONNECTION FOR 120V, 1ϕ, 0.5 HP, EXHAUST FAN 'EF-F4'. PROVIDE RELAY AND ROUTE EXHAUST FAN BRANCH CIRCUIT THROUGH RELAY FOR ON/OFF CONTROL THROUGH EMS SYSTEM.
13. PROVIDE WEATHERPROOF MOTOR RATED A/C SNAP SWITCH DISCONNECT. PROVIDE CONNECTION FOR 120V, 1ϕ, 0.5 HP, EXHAUST FAN 'EF-F5'. PROVIDE RELAY AND ROUTE EXHAUST FAN BRANCH CIRCUIT THROUGH RELAY FOR ON/OFF CONTROL THROUGH EMS SYSTEM.
14. PROVIDE WEATHERPROOF MOTOR RATED A/C SNAP SWITCH DISCONNECT. PROVIDE CONNECTION FOR 120V, 1ϕ, 0.25 HP, EXHAUST FAN 'EF-F6'. PROVIDE RELAY AND ROUTE EXHAUST FAN BRANCH CIRCUIT THROUGH RELAY FOR ON/OFF CONTROL THROUGH EMS SYSTEM.
15. PROVIDE WEATHERPROOF MOTOR RATED A/C SNAP SWITCH DISCONNECT. PROVIDE CONNECTION FOR 120V, 1ϕ, 1/15 HP, EXHAUST FAN 'EF-F8'. PROVIDE RELAY AND ROUTE EXHAUST FAN BRANCH CIRCUIT THROUGH RELAY FOR ON/OFF CONTROL THROUGH EMS SYSTEM.
16. PROVIDE WEATHERPROOF GFCI RECEPTACLE LOCATED ON ROOF WITH 'IN-USE' TYPE COVER.
17. ONE 1"C WITH 2#8 CU THWN AND 1#10 CU GND.
18. ONE 1"C WITH 2#10 CU THWN AND 1#10 CU GND.
19. PROVIDE WEATHERPROOF MOTOR RATED A/C SNAP SWITCH DISCONNECT. PROVIDE CONNECTION FOR 120V, 1ϕ, 1/15 HP, EXHAUST FAN 'EF-F10'. PROVIDE RELAY AND ROUTE EXHAUST FAN BRANCH CIRCUIT THROUGH RELAY FOR ON/OFF CONTROL THROUGH EMS SYSTEM.

GENERAL NOTES

A. CONDUIT AND CONDUCTORS FOR NEW OUTLETS SHALL BE CONCEALED, U.O.N.

B. PENETRATIONS THROUGH WALLS, CEILINGS, FLOORS, AND/OR ROOFS SHALL BE SEALED.

C. ALL 120V, 15A AND 20A RECEPTACLES INSTALLED OUTDOORS SHALL BE GFCI TYPE RECEPTACLES.

FOR BID ONLY

Teter, LLP expressly reserves its common law copyright and other property rights in these plans. This document, the ideas and designs incorporated herein, as an instrument of professional service, is not to be used in whole or in part, for any other project without prior written authorization.

MARK	DATE	DESCRIPTION
	11/1/22	DSA BACKCHECK

REGISTERED PROFESSIONAL ENGINEER COREY M. STONE No. 023953 CIVIL STATE OF CALIFORNIA

TETER, LLP
FRESNO HEADQUARTERS
VISALIA | BAKERSFIELD | MODESTO | SAN LUIS OBISPO
ARCHITECTS ENGINEERS CONNECTED

TETER

TULARE CAMPUS CTE
COLLEGE OF THE SEQUOIAS
4999 E. BARDSLEY AVE.
TULARE, CA

DRAWING TITLE
ROOF POWER PLAN - BUILDING 'F'

PROJECT NO.
21-12032

DRAWING
E221

PLOT DATE: 11/2/2022 9:51:17 AM

\\tet-file1\Users\corey.stone\Documents\12032-E-COS Tulare CTE_corey.stone.rvt

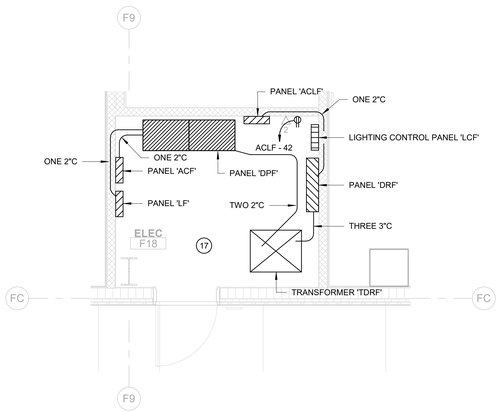

NORTH

POWER PLAN - ELECTRICAL ROOM 'F18' 1/4" = 1'-0" 4

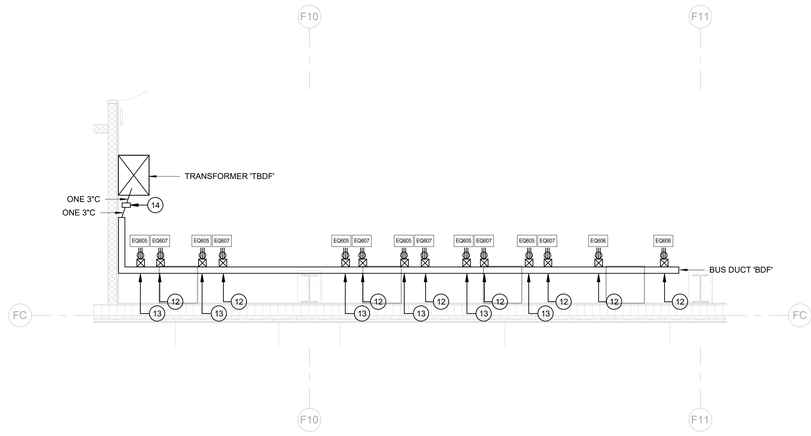

NORTH

POWER PLAN - INDUSTRIAL MAINTENANCE LAB WELDING POWER 1/4" = 1'-0" 1

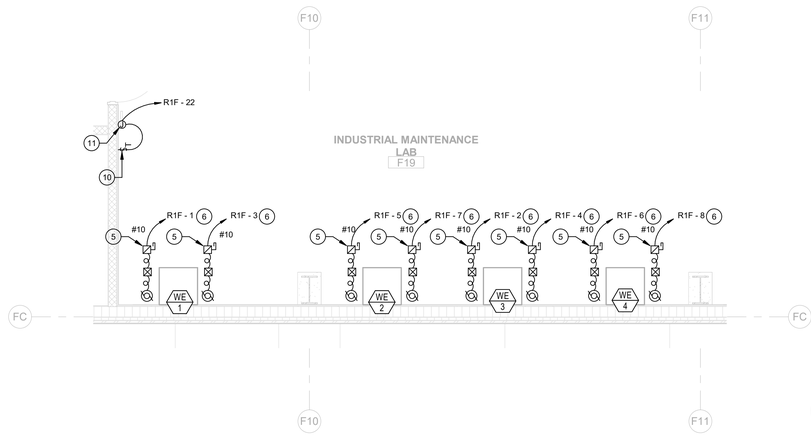

NORTH

POWER PLAN - INDUSTRIAL MAINTENANCE LAB WELDING EXHAUST 1/4" = 1'-0" 2

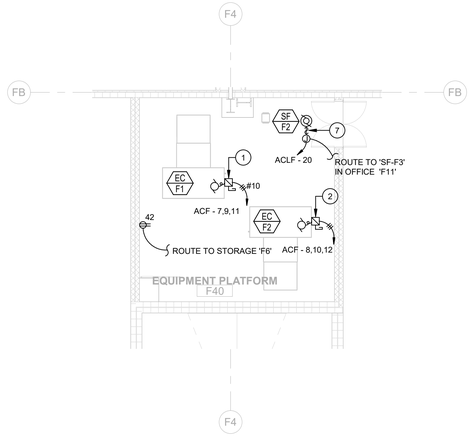

NORTH

POWER PLAN - MECHANICAL PLATFORM 'F40' 1/8" = 1'-0" 6

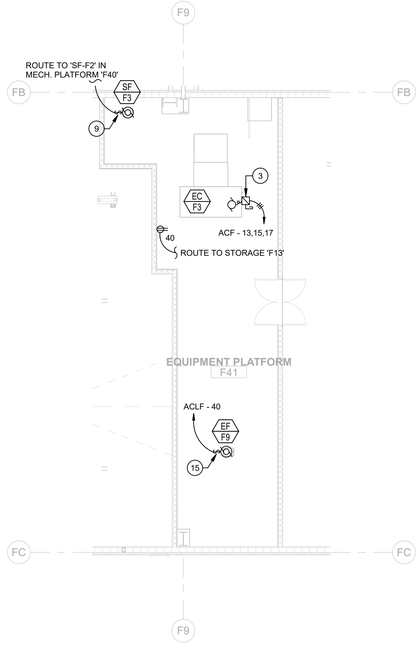

NORTH

POWER PLAN - MECHANICAL PLATFORM 'F41' 1/8" = 1'-0" 5

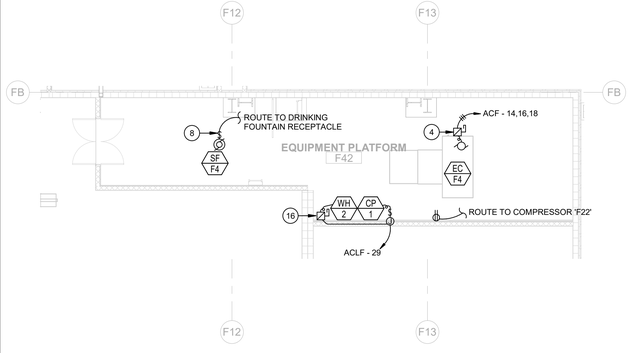

NORTH

POWER PLAN - MECHANICAL PLATFORM 'F42' 1/8" = 1'-0" 3

KEYNOTES

1. PROVIDE HEAVY DUTY 600V, 30A, 3-POLE FUSED DISCONNECT. PROVIDE CONNECTION FOR 480V, 3ϕ, 10 HP, EVAPORATIVE COOLER 'EC-F1'.
2. PROVIDE HEAVY DUTY 600V, 30A, 3-POLE FUSED DISCONNECT. PROVIDE CONNECTION FOR 480V, 3ϕ, 5 HP, EVAPORATIVE COOLER 'EC-F2'.
3. PROVIDE HEAVY DUTY 600V, 30A, 3-POLE FUSED DISCONNECT. PROVIDE CONNECTION FOR 480V, 3ϕ, 7.5 HP, EVAPORATIVE COOLER 'EC-F3'.
4. PROVIDE HEAVY DUTY 600V, 30A, 3-POLE FUSED DISCONNECT. PROVIDE CONNECTION FOR 480V, 3ϕ, 7.5 HP, EVAPORATIVE COOLER 'EC-F4'.
5. PROVIDE GENERAL DUTY 250V, 30A, 1-POLE FUSED DISCONNECT ADJACENT TO WELD EXHAUST FAN. PROVIDE POWER CONNECTION TO 1HP 115V, 1ϕ WELD EXHAUST FAN. PROVIDE THE EXAHUAST FAN POWER CONNECTION THROUGH LINCOLN STARTER/OVERLOAD SWITCH #K1494-2 PER MANUFACTURER'S INSTALLATION INSTRUCTIONS.
6. ROUTE BRANCH CIRCUIT THROUGH RELAY FOR WELDING EXHAUST FAN CONTROL PER DETAIL 17/E600.
7. PROVIDE MOTOR RATED A/C SNAP SWITCH DISCONNECT. PROVIDE CONNECTION FOR 120V, 1ϕ, 1/15 HP, SUPPLY FAN 'SF-F2'. PROVIDE ADDITIONAL CONDUIT ROUTED TO ROOF TO INTERLOCK SUPPLY FAN WITH OUTDOOR UNIT 'ODU-F2'.
8. PROVIDE MOTOR RATED A/C SNAP SWITCH DISCONNECT. PROVIDE CONNECTION FOR 120V, 1ϕ, 1/15 HP, SUPPLY FAN 'SF-F4'. PROVIDE ADDITIONAL CONDUIT ROUTED TO ROOF TO INTERLOCK SUPPLY FAN WITH OUTDOOR UNIT 'ODU-F5'.
9. PROVIDE MOTOR RATED A/C SNAP SWITCH DISCONNECT. PROVIDE CONNECTION FOR 120V, 1ϕ, 1/15 HP, SUPPLY FAN 'SF-F3'. PROVIDE ADDITIONAL CONDUIT ROUTED TO ROOF TO INTERLOCK SUPPLY FAN WITH OUTDOOR UNIT 'ODU-F3'.
10. PROVIDE 2-HOUR ROTARY TIMER SWITCH ON WALL AT +48" AFF FOR ON/OFF CONTROL OF WELDING EXAHUST FANS PER DETAIL 17/E600.
11. PROVIDE 8-POLE RELAY IN ENCLOSURE AT CEILING LEVEL FOR WELDING EXHAUST FAN CONTROL PER DETAIL 17/E600.
12. PROVIDE 50A, 3-POLE CIRCUIT BREAKER CONNECTION AT BUS DUCT.
13. PROVIDE 70A, 2-POLE CIRCUIT BREAKER CONNECTION AT BUS DUCT.
14. PROVIDE ENCLOSED CIRCUIT BREAKER FOR OVERCURRENT PROTECTION OF TRANSFORMER SECONDARY, REFER TO SINGLE LINE DIAGRAM ON E700.
15. PROVIDE MOTOR RATED A/C SNAP SWITCH DISCONNECT. PROVIDE CONNECTION FOR 120V, 1ϕ, 128 WATTS, EXHAUST FAN 'EF-F9'. PROVIDE RELAY AND ROUTE EXHAUST FAN BRANCH CIRCUIT THROUGH RELAY FOR ON/OFF CONTROL THROUGH EMS SYSTEM.
16. PROVIDE GENERAL DUTY 250V, 15A, 1-POLE FUSED DISCONNECT. PROVIDE CONNECTION FOR 120V, 3ϕ, 3 FLA, WATER HEATER 'WH-2'.
17. CONDUITS IN THIS ROOM TO BE SECURED TO WALLS. SHOWN OFFSET FOR CLARITY.

GENERAL NOTES

A. PROVIDE ELECTRICAL FEEDERS PER SINGLE LINE DIAGRAM.

B. CONDUIT AND CONDUCTORS FOR NEW OUTLETS SHALL BE CONCEALED, U.O.N.

C. PENETRATIONS THROUGH WALLS, CEILINGS, FLOORS, AND/OR ROOFS SHALL BE SEALED.

D. ALL EXPOSED CONDUIT IN ROOMS WITH NO CEILINGS SHALL BE ROUTED PARALLEL OR PERPENDICULAR TO TRUSSES AND GIRDERS. LINES SHOWN AS SPLINES AND ARCS ARE FOR DIAGRAMATIC PURPOSES ONLY.

E. REFER TO PANEL SCHEDULES ON SHEETS E810-E813 FOR REFERENCE TO THE APPROPRIATE PANEL MOUNTING DETAIL ON E600.

F. REFER TO TRANSFORMER SCHEDULE ON SHEET E800 FOR REFERENCE TO THE APPROPRIATE MOUNTING DETAIL ON E600.

FOR BID ONLY

Teter, LLP expressly reserves its common law copyright and other property rights in these plans. This document, the ideas and designs incorporated herein, as an instrument of professional service, is not to be used in whole or part, for any other project without prior written authorization.

MARK	DATE	DESCRIPTION
	11/1/22	DSA BACKCHECK

STATE OF CALIFORNIA — COREY M. STONE — No. E23263 — Exp. 6/30/23 — ELECTRICAL — REGISTERED PROFESSIONAL ENGINEER

TETER, LLP
FRESNO HEADQUARTERS
VISALIA | BAKERSFIELD | MODESTO | SAN LUIS OBISPO
ARCHITECTS ENGINEERS CONNECTED

TETER

TULARE CAMPUS CTE
COLLEGE OF THE SEQUOIAS
4999 E. BARDSLEY AVE.
TULARE, CA

DRAWING TITLE
POWER PLANS - BUILDING 'F' ENLARGEMENTS

PROJECT NO.
21-12032

DRAWING
E222

PLOT DATE: 11/2/2022 9:51:24 AM

\\etr-file1\Users\corey.stone\Documents\12032-E-COS Tulare CTE_corey.stone.rvt

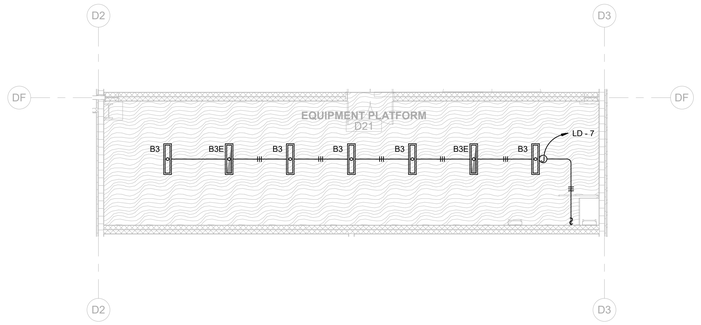

NORTH

LIGHTING PLAN - BUILDING 'D' MECHANICAL PLATFORM — 1/8" = 1'-0" — 2

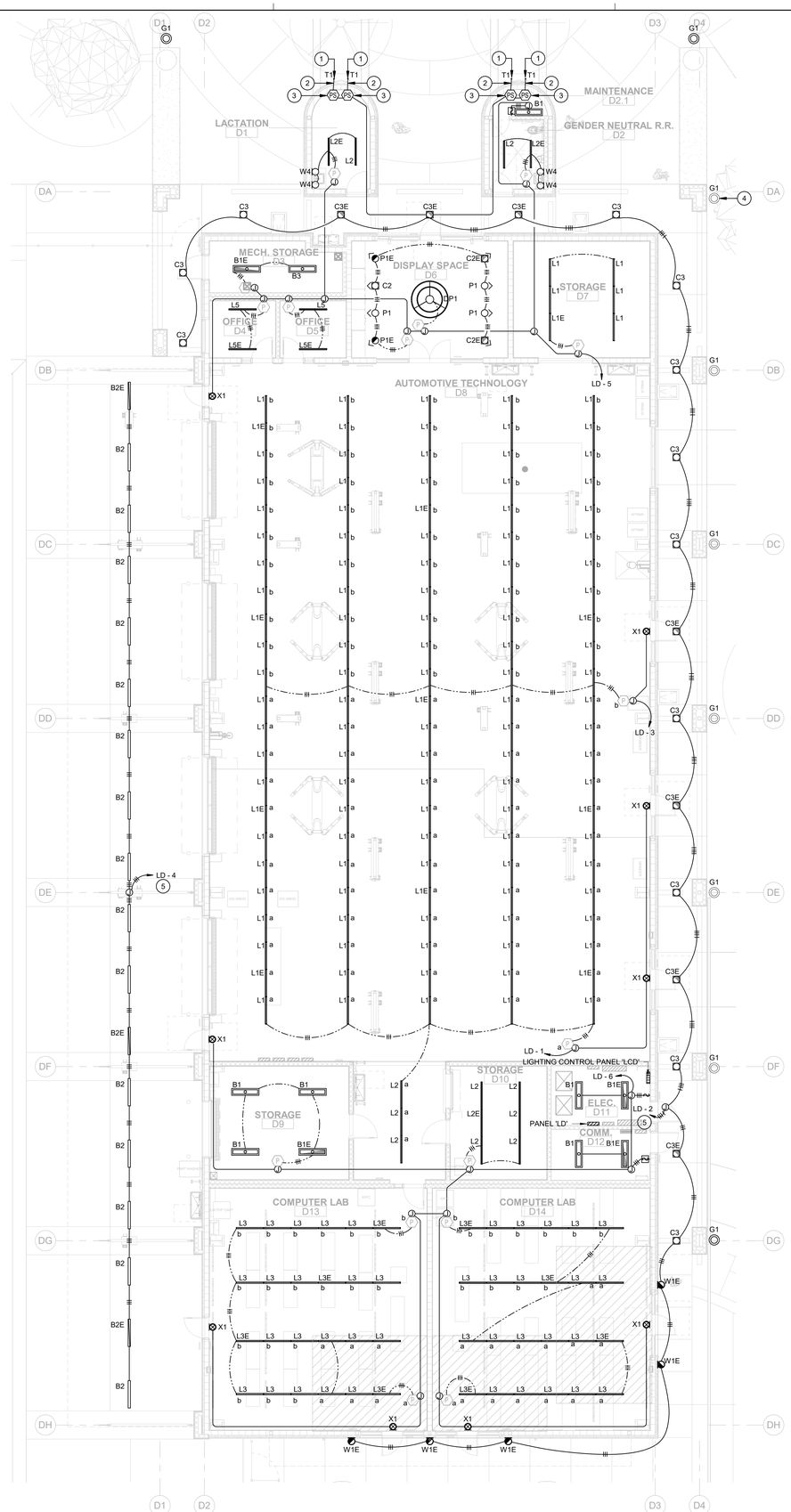

NORTH

LIGHTING PLAN - BUILDING 'D' — 1/8" = 1'-0" — 1

KEYNOTES

1. INSTALL TWO LED TAPE LIGHT FIXTURES 'T1' PER DETAIL 7/E601.
2. ROUTE FACTORY PROVIDED LEAD WIRES FROM 'T1' FIXTURES THROUGH EXTERIOR WALL TO POWER SUPPLY PER DETAIL 7/E601.
3. PROVIDE 277V, 1ϕ POWER CONNECTION TO TAPE LIGHT POWER SUPPLY #ADNM-240-2-4-24-DIN. MOUNT POWER SUPPLY AT +60" A.F.F.
4. REFER TO E101 FOR ELECTRICAL CIRCUITING, TYPICAL FOR ALL IN-GRADE LIGHT FIXTURES 'G1'.
5. ROUTE EXTERIOR LIGHTING BRANCH CIRUIT THROUGH LIGHTING CONTROL PANEL.

LIGHTING WIRING LEGEND

- LIGHTING BRANCH CIRCUIT IN EMT CONDUIT CONSISTING OF THE FOLLOWING BRANCH CIRCUIT CONDUCTORS:
  1. HOT - 1#12 CU THHN (BROWN, ORANGE OR YELLOW)
  2. NEUTRAL - 1#12 CU THHN (WHITE WITH COLORED STRIPE)
  3. EQUIPMENT GROUNDING - 1#12 CU THHN (GREEN)
- TYPE MC-PCS MC LUMINARY CABLE CONSISTING OF THE FOLLOWING CIRCUIT CONDUCTORS:
  1. CONTROLLED HOT - 1#12 CU THHN (BROWN)
  2. UNSWITCHED HOT - 1#12 CU THHN (ORANGE)
  3. NEUTRAL - 1#12 CU THHN (GREY)
  4. EQUIPMENT GROUNDING - 1#12 CU THHN (GREEN)
  5. 0-10VDC CONTROL: PVC JACKET CONTAINING 2#16 CU TFN (PURPLE & GRAY)
- TYPE MC-PCS MC LUMINARY CABLE CONSISTING OF THE FOLLOWING CIRCUIT CONDUCTORS:
  1. CONTROLLED HOT - 1#12 CU THHN (BROWN)
  2. NEUTRAL - 1#12 CU THHN (GREY)
  3. EQUIPMENT GROUNDING - 1#12 CU THHN (GREEN)
  4. 0-10VDC CONTROL: PVC JACKET CONTAINING 2#16 CU TFN (PURPLE & GRAY)

LIGHTING SYMBOL LEGEND

PRIMARY SIDELIT ZONE:

- (P) NETWORK DIMMING CONTROL RELAY
- (PS) LED TAPE LIGHT POWER SUPPLY, TIVOLI #ADNM-240-2-4-24-DIN
- [$] WALL SWITCH WITH INTEGRAL OCCUPANCY SENSOR AT +48" TO TOP OF OUTLET BOX
- $ WALL SWITCH AT +48" TO TOP OF OUTLET BOX

GENERAL NOTES

A. CIRCUITS SUPPLYING EMERGENCY LIGHTING FIXTURES SHALL BE SUPPLIED BY A CONTROLLED HOT CONDUCTOR AND A CONSTANT HOT CONDUCTOR OF THE SAME BRANCH CIRCUIT.

B. EXIT SIGNAGE AND WALL MOUNTED EMERGENCY LIGHTING UNITS SHALL BE SUPPLIED BY AN UNSWITCHED HOT CONDUCTOR.

C. REFER TO ARCHITECTURAL SHEETS FOR ELEVATIONS OF WALL MOUNTED LIGHTING FIXTURES.

D. CONDUIT AND CABLES SHALL BE CONCEALED WITHIN WALLS AND ABOVE CEILINGS.

E. ALL EXPOSED CONDUIT IN ROOMS WITH NO CEILINGS SHALL BE ROUTED PARALLEL OR PERPENDICULAR TO TRUSSES AND GIRDERS. LINES SHOWN AS SPLINES AND ARCS ARE FOR DIAGRAMATIC PURPOSES ONLY.

FOR BID ONLY

Teter, LLP expressly reserves its common law copyright and other property rights in these plans. This document, the ideas and designs incorporated herein, as an instrument of professional service, is not to be used in whole or part, for any other project without prior written authorization.

MARK	DATE	DESCRIPTION
	11/1/22	DSA BACKCHECK

REGISTERED PROFESSIONAL ENGINEER — COREY M. STONE — No. E23263 — ELECTRICAL — STATE OF CALIFORNIA

TETER, LLP
FRESNO HEADQUARTERS
VISALIA | BAKERSFIELD | MODESTO | SAN LUIS OBISPO
ARCHITECTS ENGINEERS CONNECTED

TULARE CAMPUS CTE
COLLEGE OF THE SEQUOIAS
4999 E. BARDSLEY AVE.
TULARE, CA

DRAWING TITLE: LIGHTING PLAN - BUILDING 'D'

PROJECT NO. 21-12032

DRAWING E300

PLOT DATE: 11/2/2022 9:51:50 AM

\\etr-file1\Users\corey.stone\Documents\12032-E-COS Tulare CTE_corey.stone.rvt

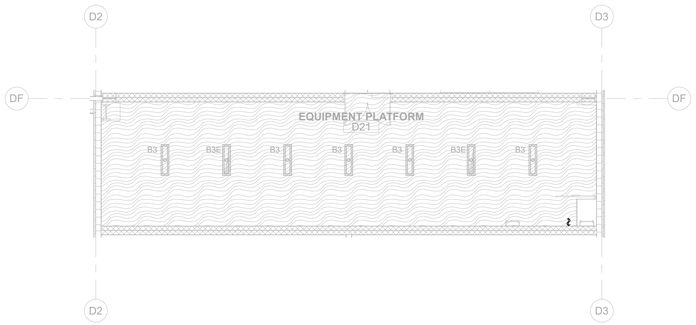

NORTH

LIGHTING CONTROL PLAN - BUILDING 'D' MECHANICAL PLATFORM | 1/8" = 1'-0" | 2

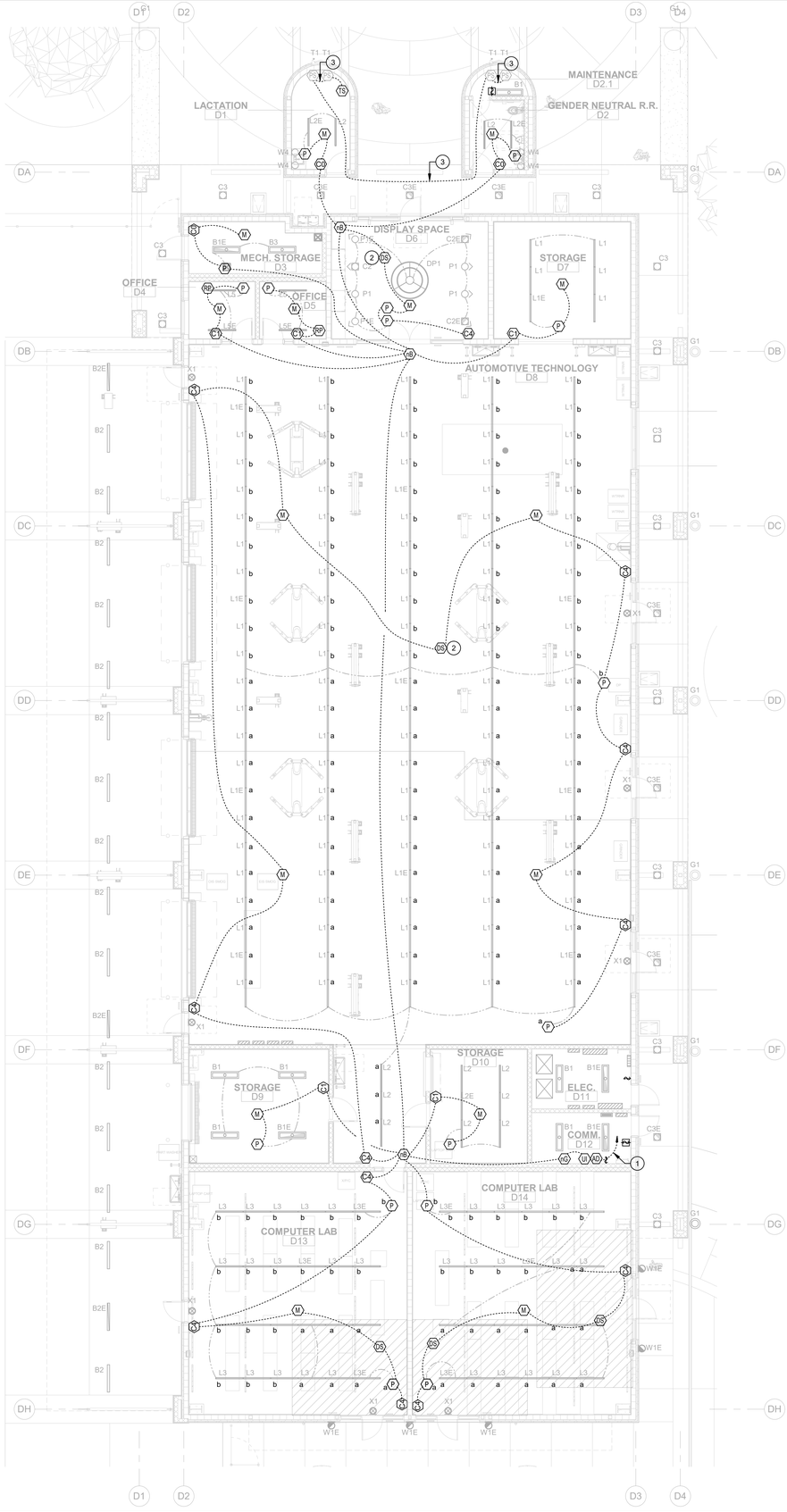

NORTH

LIGHTING CONTROL PLAN - BUILDING 'D' | 1/8" = 1'-0" | 1

KEYNOTES

1. PROVIDE ONE CATEGORY 5e CABLE TO LAN SWITCH.
2. ENTIRE ROOM SHALL BE CONSIDERED PRIMARY DAYLIT ZONE. ALL FIXTURES IN THIS ROOM ARE CONTROLLED BY NETWORK DAYLIGHTING SENSOR.
3. PROVIDE CATEGORY 5e CABLE TO DAISY CHAIN LED TAPE POWER SUPPLIES FOR DMX CONNECTION TO DMX WALL CONTROLLER.

LIGHTING WIRING LEGEND

- ONE 3/4"C WITH CLASS 2 CATEGORY 5E PLENUM RATED CABLE GREEN IN COLOR WITH RJ45 CONNECTORS ON EACH END
- TYPE MC-PCS MC LUMINARY CABLE, REFER TO LIGHTING PLAN

LIGHTING SYMBOL LEGEND

PRIMARY SIDELIT ZONE:

- (M) NETWORK CEILING MOUNTED OCCUPANCY SENSOR
- (W) SINGLE-ZONE NETWORK MANUAL CONTROL STATION AT +48" TO TOP OF OUTLET BOX
- (Y) SINGLE-ZONE NETWORK DIMMING MANUAL CONTROL STATION AT +48" TO TOP OF OUTLET BOX
- (X) FOUR-SCENE NETWORK DIMMING MANUAL CONTROL STATION AT +48" TO TOP OF OUTLET BOX
- (DS) NETWORK DAYLIGHTING SENSOR WITHIN DAYLIT ZONE
- (P) NETWORK DIMMING CONTROL RELAY
- (RP) NETWORK PLUG LOAD CONTROLLER RELAY
- (XG) NETWORK GATEWAY
- (nB) NETWORK BRIDGE
- (AD) NETWORK AUTOMATED DEMAND RESPONSIVE CONTROL INTERFACE
- (S) WALL SWITCH WITH INTEGRAL OCCUPANCY SENSOR AT +48" TO TOP OF OUTLET BOX
- S WALL SWITCH AT +48" TO TOP OF OUTLET BOX
- (UI) nLIGHT GRAPHICAL USER INTERFACE
- (TS) DMX 512 WALL CONTROLLER WITH TOUCH SCREEN LCD, ACUITY CONTROLS FRESCO #EZSOLO OR EQUIVALENT.

GENERAL NOTES

A. NETWORK DAYLIGHT SENSORS FOR AUTOMATIC DIMMING WITHIN A DAYLIT ZONE SHALL BE CALIBRATED SUCH THAT LIGHTING POWER FOR THE LIGHTING FIXTURES WITHIN THAT DAYLIT ZONE SHALL BE REDUCED BY 65% WHEN DAYLIT ILLUMINANCE IS 150% OF ILLUMINANCE RECEIVED FROM THE GENERAL LIGHTING SYSTEM AT FULL POWER.

B. LIGHTING CONTROLS SHALL BE DEMAND RESPONSIVE AND SHALL AUTOMATICALLY REDUCE BUILDING LIGHTING POWER DEMAND BY 15% IN RESPONSE TO A DEMAND RESPONSE SIGNAL PER 2019 CA ENERGY CODE SECTION 130.1 (e).

C. CONDUIT AND CABLES SHALL BE CONCEALED WITHIN WALLS AND ABOVE CEILINGS.

D. ALL EXPOSED CONDUIT IN ROOMS WITH NO CEILINGS SHALL BE ROUTED PARALLEL OR PERPENDICULAR TO TRUSSES AND GIRDERS. LINES SHOWN AS SPLINES AND ARCS ARE FOR DIAGRAMATIC PURPOSES ONLY.

FOR BID ONLY

Teter, LLP expressly reserves its common law copyright and other property rights in these plans. This document, the ideas and designs incorporated herein, as an instrument of professional service, is not to be used in whole or part, for any other project without prior written authorization.

MARK	DATE	DESCRIPTION
	11/1/22	DSA BACKCHECK

COREY M. STONE No. E23353 ELECTRICAL REGISTERED PROFESSIONAL ENGINEER 8/31/2023

TETER, LLP
FRESNO HEADQUARTERS
VISALIA I BAKERSFIELD I MODESTO I SAN LUIS OBISPO
ARCHITECTS ENGINEERS CONSULTANTS

TULARE CAMPUS CTE
COLLEGE OF THE SEQUOIAS
4999 E. BARDSLEY AVE.
TULARE, CA

DRAWING TITLE
LIGHTING CONTROL PLAN - BUILDING 'D'

PROJECT NO.
21-12032

DRAWING
E301

PLOT DATE: 11/2/2022 9:52:14 AM

\\etr-file1\Users\corey.stone\Documents\12032-E-COS Tulare CTE_corey.stone.rvt

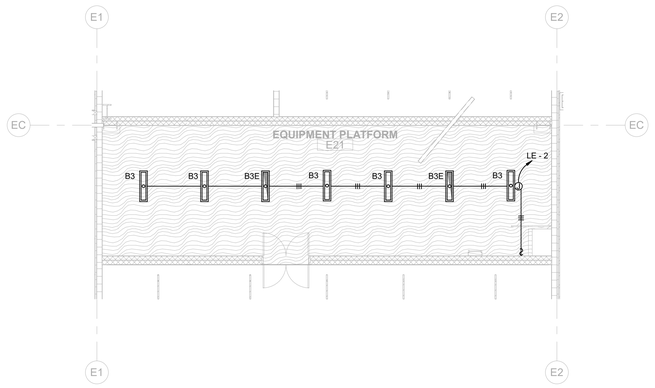

NORTH

LIGHTING PLAN - BUILDING 'E' MECHANICAL PLATFORM | 1/8" = 1'-0" | 2

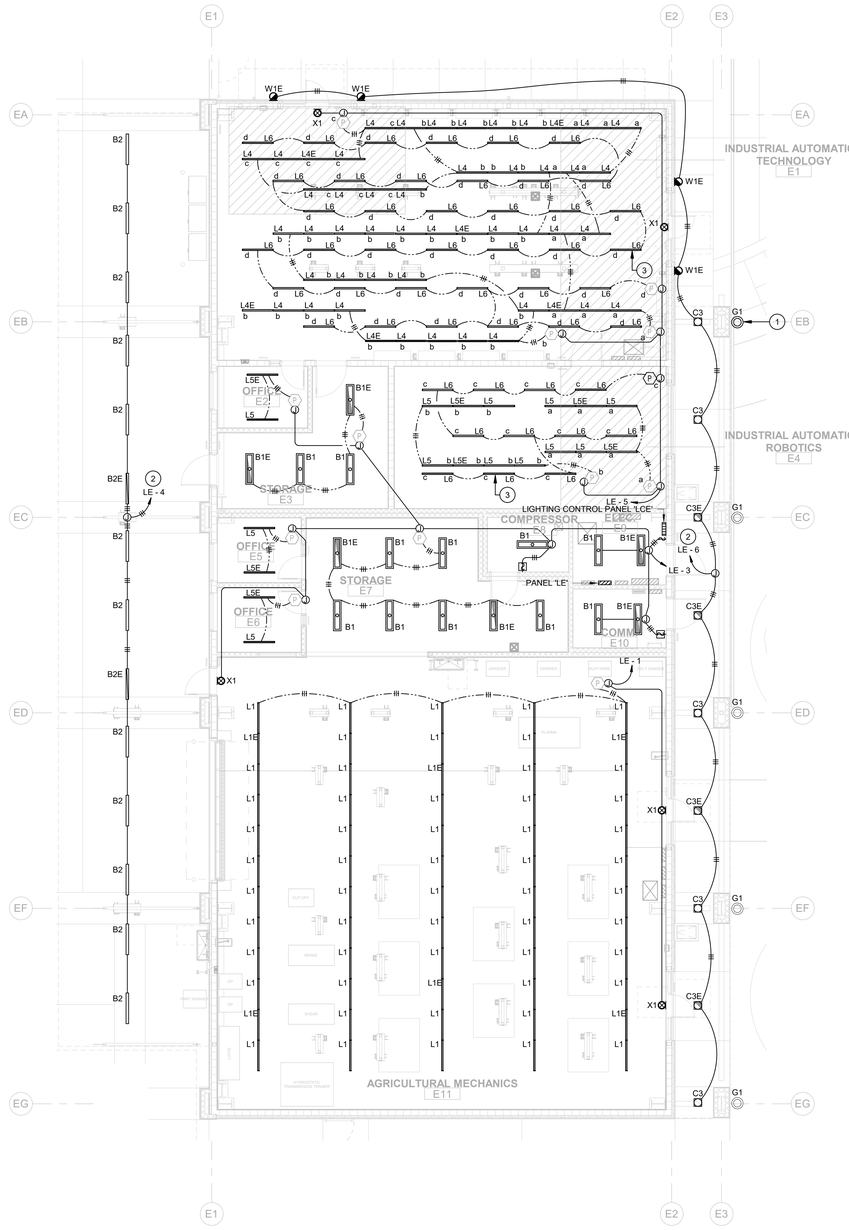

NORTH

LIGHTING PLAN - BUILDING 'E' | 1/8" = 1'-0" | 1

KEYNOTES

1. REFER TO E101 FOR ELECTRICAL CIRCUITING, TYPICAL FOR ALL IN-GRADE LIGHT FIXTURES 'G1'.
2. ROUTE EXTERIOR LIGHTING BRANCH CIRUIT THROUGH LIGHTING CONTROL PANEL.
3. INSTALL LIGHTING FIXTURE ABOVE PERFORATED METAL CEILING SYSTEM, TYPICAL FOR ALL TYPE 'L6' FIXTURES IN THIS ROOM

LIGHTING WIRING LEGEND

——— LIGHTING BRANCH CIRCUIT IN EMT CONDUIT CONSISTING OF THE FOLLOWING BRANCH CIRCUIT CONDUCTORS:
1. HOT - 1#12 CU THHN (BROWN, ORANGE OR YELLOW)
2. NEUTRAL - 1#12 CU THHN (WHITE WITH COLORED STRIPE)
3. EQUIPMENT GROUNDING - 1#12 CU THHN (GREEN)

----3---- TYPE MC-PCS MC LUMINARY CABLE CONSISTING OF THE FOLLOWING CIRCUIT CONDUCTORS:
1. CONTROLLED HOT - 1#12 CU THHN (BROWN)
2. UNSWITCHED HOT - 1#12 CU THHN (ORANGE)
3. NEUTRAL - 1#12 CU THHN (GREY)
4. EQUIPMENT GROUNDING - 1#12 CU THHN (GREEN)
5. 0-10VDC CONTROL: PVC JACKET CONTAINING 2#16 CU TFN (PURPLE & GRAY)

----4---- TYPE MC-PCS MC LUMINARY CABLE CONSISTING OF THE FOLLOWING CIRCUIT CONDUCTORS:
1. CONTROLLED HOT - 1#12 CU THHN (BROWN)
2. NEUTRAL - 1#12 CU THHN (GREY)
3. EQUIPMENT GROUNDING - 1#12 CU THHN (GREEN)
4. 0-10VDC CONTROL: PVC JACKET CONTAINING 2#16 CU TFN (PURPLE & GRAY)

LIGHTING SYMBOL LEGEND

PRIMARY SIDELIT ZONE:

(P) NETWORK DIMMING CONTROL RELAY

[$] WALL SWITCH WITH INTEGRAL OCCUPANCY SENSOR AT +48" TO TOP OF OUTLET BOX

$ WALL SWITCH AT +48" TO TOP OF OUTLET BOX

GENERAL NOTES

A. CIRCUITS SUPPLYING EMERGENCY LIGHTING FIXTURES SHALL BE SUPPLIED BY A CONTROLLED HOT CONDUCTOR AND A CONSTANT HOT CONDUCTOR OF THE SAME BRANCH CIRCUIT.

B. EXIT SIGNAGE AND WALL MOUNTED EMERGENCY LIGHTING UNITS SHALL BE SUPPLIED BY AN UNSWITCHED HOT CONDUCTOR.

C. REFER TO ARCHITECTURAL SHEETS FOR ELEVATIONS OF WALL MOUNTED LIGHTING FIXTURES.

D. CONDUIT AND CABLES SHALL BE CONCEALED WITHIN WALLS AND ABOVE CEILINGS.

E. ALL EXPOSED CONDUIT IN ROOMS WITH NO CEILINGS SHALL BE ROUTED PARALLEL OR PERPENDICULAR TO TRUSSES AND GIRDERS. LINES SHOWN AS SPLINES AND ARCS ARE FOR DIAGRAMATIC PURPOSES ONLY.

FOR BID ONLY

Teter, LLP expressly reserves its common law copyright and other property rights in these plans. This document, the ideas and designs incorporated herein, as an instrument of professional service, is not to be used in whole or part, for any other project without prior written authorization.

MARK	DATE	DESCRIPTION
	11/1/22	DSA BACKCHECK

REGISTERED PROFESSIONAL ENGINEER COREY M. STONE No. E23263 EXP. 6/30/23 ELECTRICAL

TETER, LLP
FRESNO HEADQUARTERS
VISALIA | BAKERSFIELD | MODESTO | SAN LUIS OBISPO
ARCHITECTS ENGINEERS CONNECTED

TETER

TULARE CAMPUS CTE
COLLEGE OF THE SEQUOIAS
4999 E. BARDSLEY AVE.
TULARE, CA

DRAWING TITLE
LIGHTING PLAN - BUILDING 'E'

PROJECT NO.
21-12032

DRAWING
E310

PLOT DATE: 11/2/2022 9:52:27 AM

\\tet-file1\Users\corey.stone\Documents\12032-E-COS Tulare CTE_corey.stone.rvt

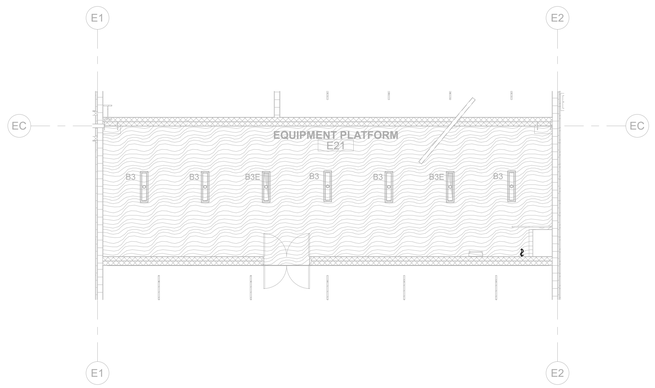

NORTH

LIGHTING CONTROL PLAN - BUILDING 'E' MECHANICAL PLATFORM | 1/8" = 1'-0" | 2

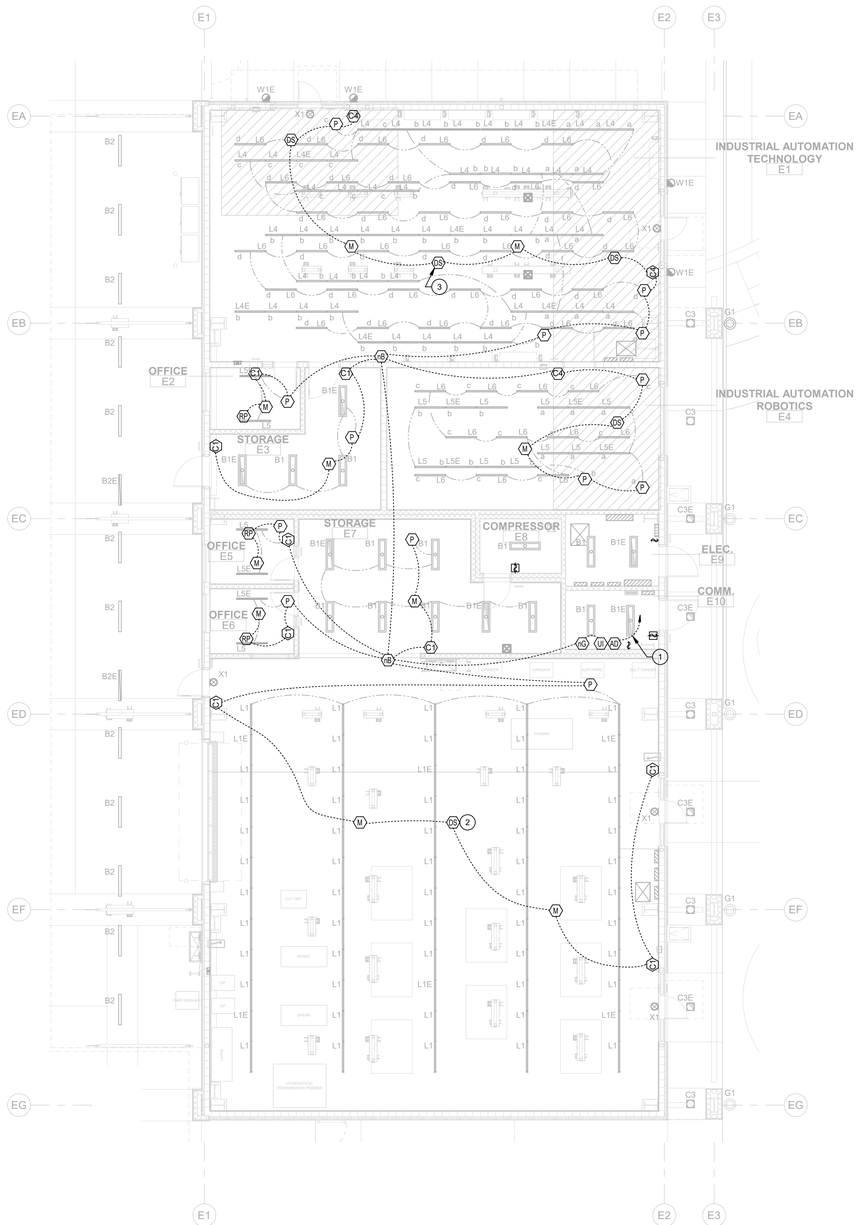

KEYNOTES

1. PROVIDE ONE CATEGORY 5e CABLE TO LAN SWITCH.
2. ENTIRE ROOM SHALL BE CONSIDERED PRIMARY DAYLIT ZONE. ALL FIXTURES IN THIS ROOM ARE CONTROLLED BY NETWORK DAYLIGHTING SENSOR.
3. ENTIRE ROOM SHALL BE CONSIDERED PRIMARY DAYLIT ZONE ABOVE SUSPENDED CEILING. ALL FIXTURES ABOVE SUSPENDED CEILING IN THIS ROOM ARE CONTROLLED BY NETWORK DAYLIGHTING SENSOR. MOUNT DAYLIGHT SENSOR ABOVE SUSPENDED CEILING.

LIGHTING WIRING LEGEND

- ONE 3/4"C WITH CLASS 2 CATEGORY 5E PLENUM RATED CABLE GREEN IN COLOR WITH RJ45 CONNECTORS ON EACH END
- TYPE MC-PCS MC LUMINARY CABLE, REFER TO LIGHTING PLAN

LIGHTING SYMBOL LEGEND

PRIMARY SIDELIT ZONE:

- (M) NETWORK CEILING MOUNTED OCCUPANCY SENSOR
- (C1) SINGLE-ZONE NETWORK DIMMING MANUAL CONTROL STATION AT +48" TO TOP OF OUTLET BOX
- (C4) FOUR-SCENE NETWORK DIMMING MANUAL CONTROL STATION AT +48" TO TOP OF OUTLET BOX
- (DS) NETWORK DAYLIGHTING SENSOR WITHIN DAYLIT ZONE
- (P) NETWORK DIMMING CONTROL RELAY
- (RP) NETWORK PLUG LOAD CONTROLLER RELAY
- (NG) NETWORK GATEWAY
- (NB) NETWORK BRIDGE
- (AD) NETWORK AUTOMATED DEMAND RESPONSIVE CONTROL INTERFACE
- (S) WALL SWITCH WITH INTEGRAL OCCUPANCY SENSOR AT +48" TO TOP OF OUTLET BOX
- WALL SWITCH AT +48" TO TOP OF OUTLET BOX
- (UI) nLIGHT GRAPHIC USER INTERFACE

GENERAL NOTES

A. NETWORK DAYLIGHT SENSORS FOR AUTOMATIC DIMMING WITHIN A DAYLIT ZONE SHALL BE CALIBRATED SUCH THAT LIGHTING POWER FOR THE LIGHTING FIXTURES WITHIN THAT DAYLIT ZONE SHALL BE REDUCED BY 65% WHEN DAYLIT ILLUMINANCE IS 150% OF ILLUMINANCE RECEIVED FROM THE GENERAL LIGHTING SYSTEM AT FULL POWER.

B. LIGHTING CONTROLS SHALL BE DEMAND RESPONSIVE AND SHALL AUTOMATICALLY REDUCE BUILDING LIGHTING POWER DEMAND BY 15% IN RESPONSE TO A DEMAND RESPONSE SIGNAL PER 2019 CA ENERGY CODE SECTION 130.1 (e).

C. CONDUIT AND CABLES SHALL BE CONCEALED WITHIN WALLS AND ABOVE CEILINGS.

D. ALL EXPOSED CONDUIT IN ROOMS WITH NO CEILINGS SHALL BE ROUTED PARALLEL OR PERPENDICULAR TO TRUSSES AND GIRDERS. LINES SHOWN AS SPLINES AND ARCS ARE FOR DIAGRAMATIC PURPOSES ONLY.

NORTH

LIGHTING CONTROL PLAN - BUILDING 'E' | 1/8" = 1'-0" | 1

PLOT DATE: 11/2/2022 9:52:40 AM

FOR BID ONLY

Teter, LLP expressly reserves its common law copyright and other property rights in these plans. This document, the ideas and designs incorporated herein, as an instrument of professional service, is not to be used in whole or part, for any other project without prior written authorization.

MARK	DATE	DESCRIPTION
	11/1/22	DSA BACKCHECK

TETER, LLP
FRESNO HEADQUARTERS
VISALIA | BAKERSFIELD | MODESTO | SAN LUIS OBISPO
ARCHITECTS ENGINEERS CONSULTANTS

TULARE CAMPUS CTE
COLLEGE OF THE SEQUOIAS
4999 E. BARDSLEY AVE.
TULARE, CA

DRAWING TITLE
LIGHTING CONTROL PLAN - BUILDING 'E'

PROJECT NO.
21-12032

DRAWING
E311

\\tet-file1\Users\corey.stone\Documents\12032-E-COS Tulare CTE_corey.stone.rvt

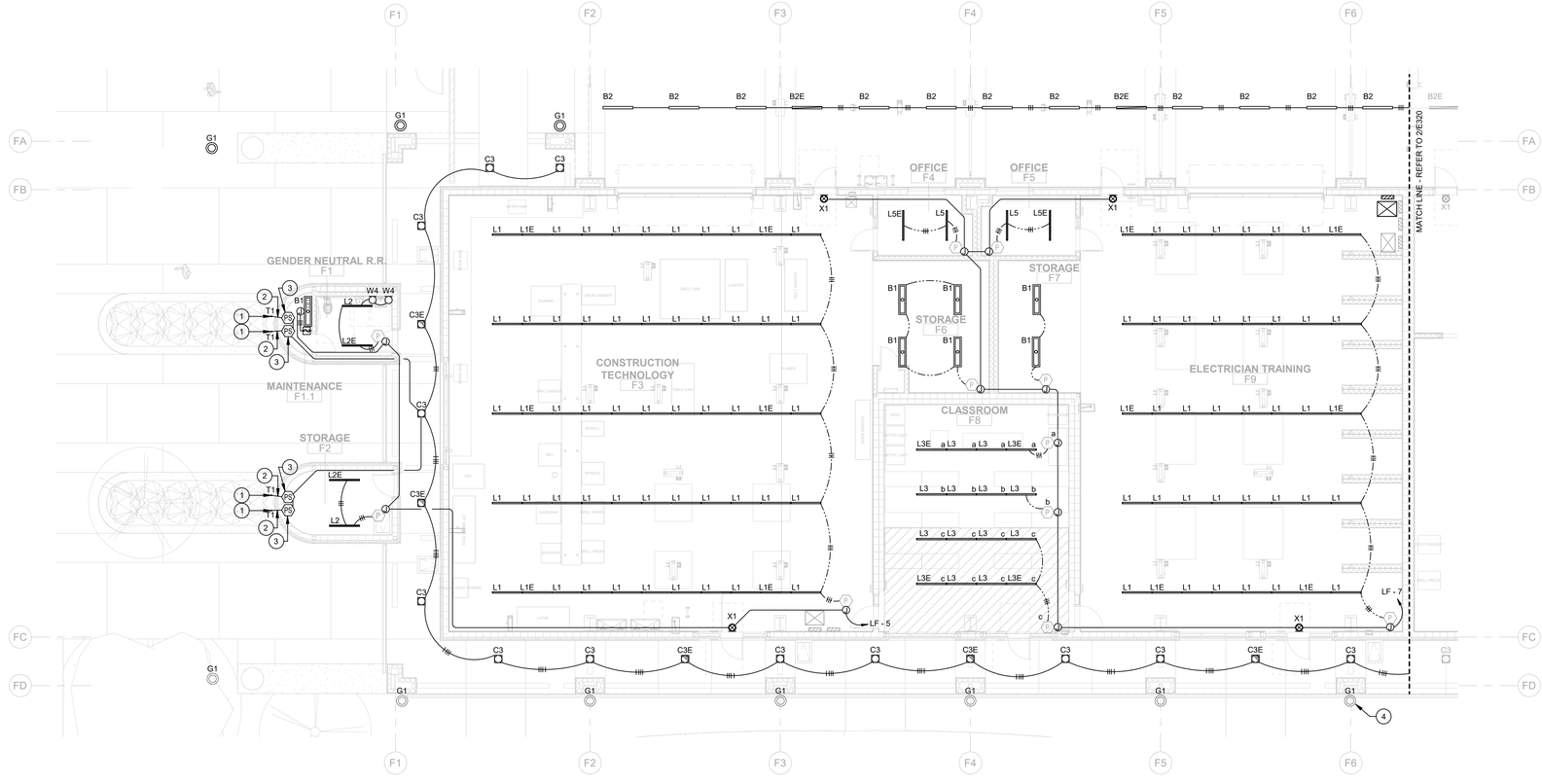

NORTH

LIGHTING PLAN - BUILDING 'F' (WEST) — 1/8" = 1'-0" — 1

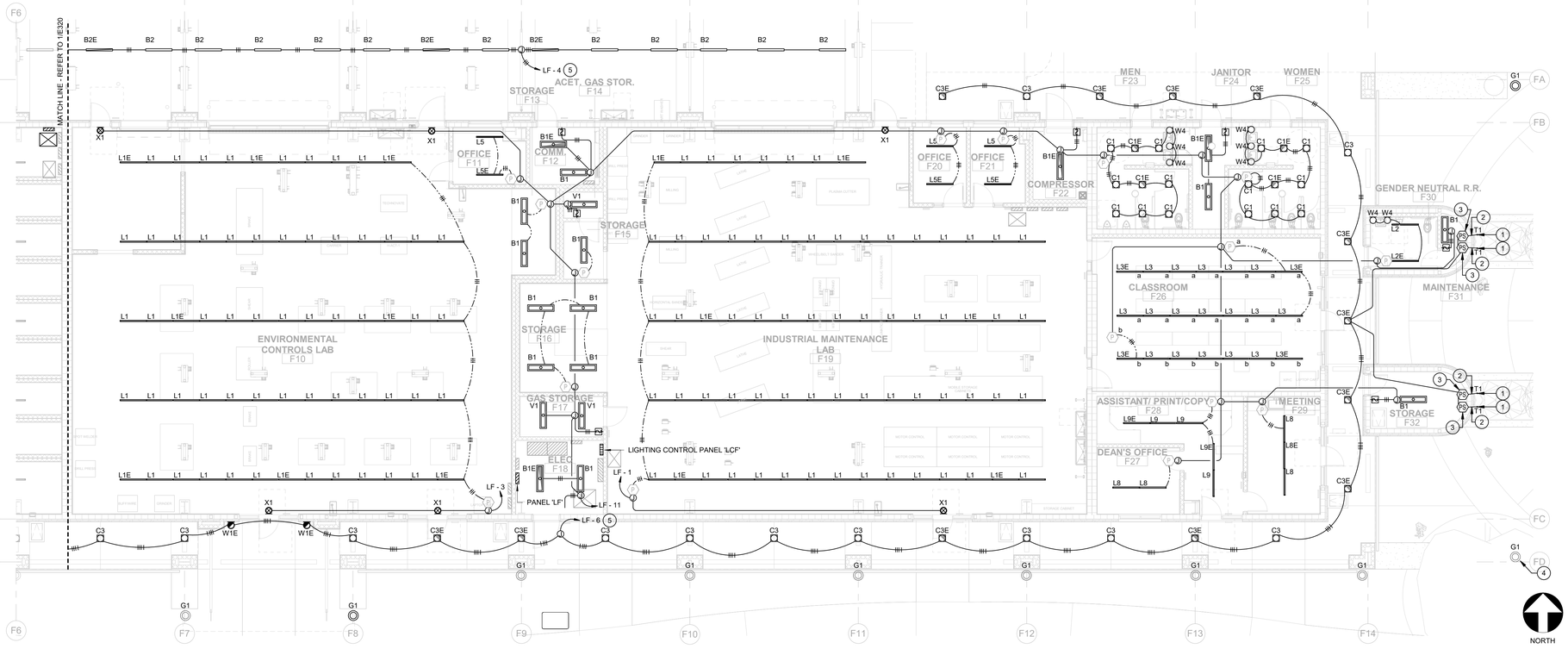

NORTH

LIGHTING PLAN - BUILDING 'F' (EAST) — 1/8" = 1'-0" — 2

KEYNOTES

1. INSTALL TWO LED TAPE LIGHT FIXTURES 'T1' PER DETAIL 7/E601.
2. ROUTE FACTORY PROVIDED LEAD WIRES FROM 'T1' FIXTURES THROUGH EXTERIOR WALL TO POWER SUPPLY PER DETAIL 7/E601.
3. PROVIDE 277V, 1ϕ POWER CONNECTION TO TAPE LIGHT POWER SUPPLY #ADNM-240-2-4-24-DIN. MOUNT POWER SUPPLY AT +60" A.F.F.
4. REFER TO E101 FOR ELECTRICAL CIRCUITING, TYPICAL FOR ALL IN-GRADE LIGHT FIXTURES 'G1'.
5. ROUTE EXTERIOR LIGHTING BRANCH CIRUIT THROUGH LIGHTING CONTROL PANEL.

LIGHTING WIRING LEGEND

- LIGHTING BRANCH CIRCUIT IN EMT CONDUIT CONSISTING OF THE FOLLOWING BRANCH CIRCUIT CONDUCTORS:
  1. HOT - 1#12 CU THHN (BROWN, ORANGE OR YELLOW)
  2. NEUTRAL - 1#12 CU THHN (WHITE WITH COLORED STRIPE)
  3. EQUIPMENT GROUNDING - 1#12 CU THHN (GREEN)
- TYPE MC-PCS MC LUMINARY CABLE CONSISTING OF THE FOLLOWING CIRCUIT CONDUCTORS:
  1. CONTROLLED HOT - 1#12 CU THHN (BROWN)
  2. UNSWITCHED HOT - 1#12 CU THHN (ORANGE)
  3. NEUTRAL - 1#12 CU THHN (GREY)
  4. EQUIPMENT GROUNDING - 1#12 CU THHN (GREEN)
  5. 0-10VDC CONTROL: PVC JACKET CONTAINING 2#16 CU TFN (PURPLE & GRAY)
- TYPE MC-PCS MC LUMINARY CABLE CONSISTING OF THE FOLLOWING CIRCUIT CONDUCTORS:
  1. CONTROLLED HOT - 1#12 CU THHN (BROWN)
  2. NEUTRAL - 1#12 CU THHN (GREY)
  3. EQUIPMENT GROUNDING - 1#12 CU THHN (GREEN)
  4. 0-10VDC CONTROL: PVC JACKET CONTAINING 2#16 CU TFN (PURPLE & GRAY)

LIGHTING SYMBOL LEGEND

PRIMARY SIDELIT ZONE:

- (P) NETWORK DIMMING CONTROL RELAY
- (PS) LED TAPE LIGHT POWER SUPPLY, TIVOLI #ADNM-240-2-4-24-DIN
- WALL SWITCH WITH INTEGRAL OCCUPANCY SENSOR AT +48" TO TOP OF OUTLET BOX
- WALL SWITCH AT +48" TO TOP OF OUTLET BOX

GENERAL NOTES

A. CIRCUITS SUPPLYING EMERGENCY LIGHTING FIXTURES SHALL BE SUPPLIED BY A CONTROLLED HOT CONDUCTOR AND A CONSTANT HOT CONDUCTOR OF THE SAME BRANCH CIRCUIT.

B. EXIT SIGNAGE AND WALL MOUNTED EMERGENCY LIGHTING UNITS SHALL BE SUPPLIED BY AN UNSWITCHED HOT CONDUCTOR.

C. REFER TO ARCHITECTURAL SHEETS FOR ELEVATIONS OF WALL MOUNTED LIGHTING FIXTURES.

D. CONDUIT AND CABLES SHALL BE CONCEALED WITHIN WALLS AND ABOVE CEILINGS.

E. ALL EXPOSED CONDUIT IN ROOMS WITH NO CEILINGS SHALL BE ROUTED PARALLEL OR PERPENDICULAR TO TRUSSES AND GIRDERS. LINES SHOWN AS SPLINES AND ARCS ARE FOR DIAGRAMATIC PURPOSES ONLY.

FOR BID ONLY

Teter, LLP expressly reserves its common law copyright and other property rights in these plans. This document, the ideas and designs incorporated herein, as an instrument of professional service, is not to be used in whole or part, for any other project without prior written authorization.

MARK	DATE	DESCRIPTION
	11/1/22	DSA BACKCHECK

REGISTERED PROFESSIONAL ENGINEER — COREY M. STONE — No. E23263 — Exp. 6-30-23 — ELECTRICAL

TETER, LLP
FRESNO HEADQUARTERS
VISALIA | BAKERSFIELD | MODESTO | SAN LUIS OBISPO
ARCHITECTS ENGINEERS CONNECTED

TULARE CAMPUS CTE
COLLEGE OF THE SEQUOIAS
4999 E. BARDSLEY AVE.
TULARE, CA

DRAWING TITLE: LIGHTING PLAN - BUILDING 'F'

PROJECT NO. 21-12032

DRAWING E320

PLOT DATE: 11/2/2022 9:53:14 AM

\\etr-file1\Users\corey.stone\Documents\12032-E-COS Tulare CTE_corey.stone.rvt

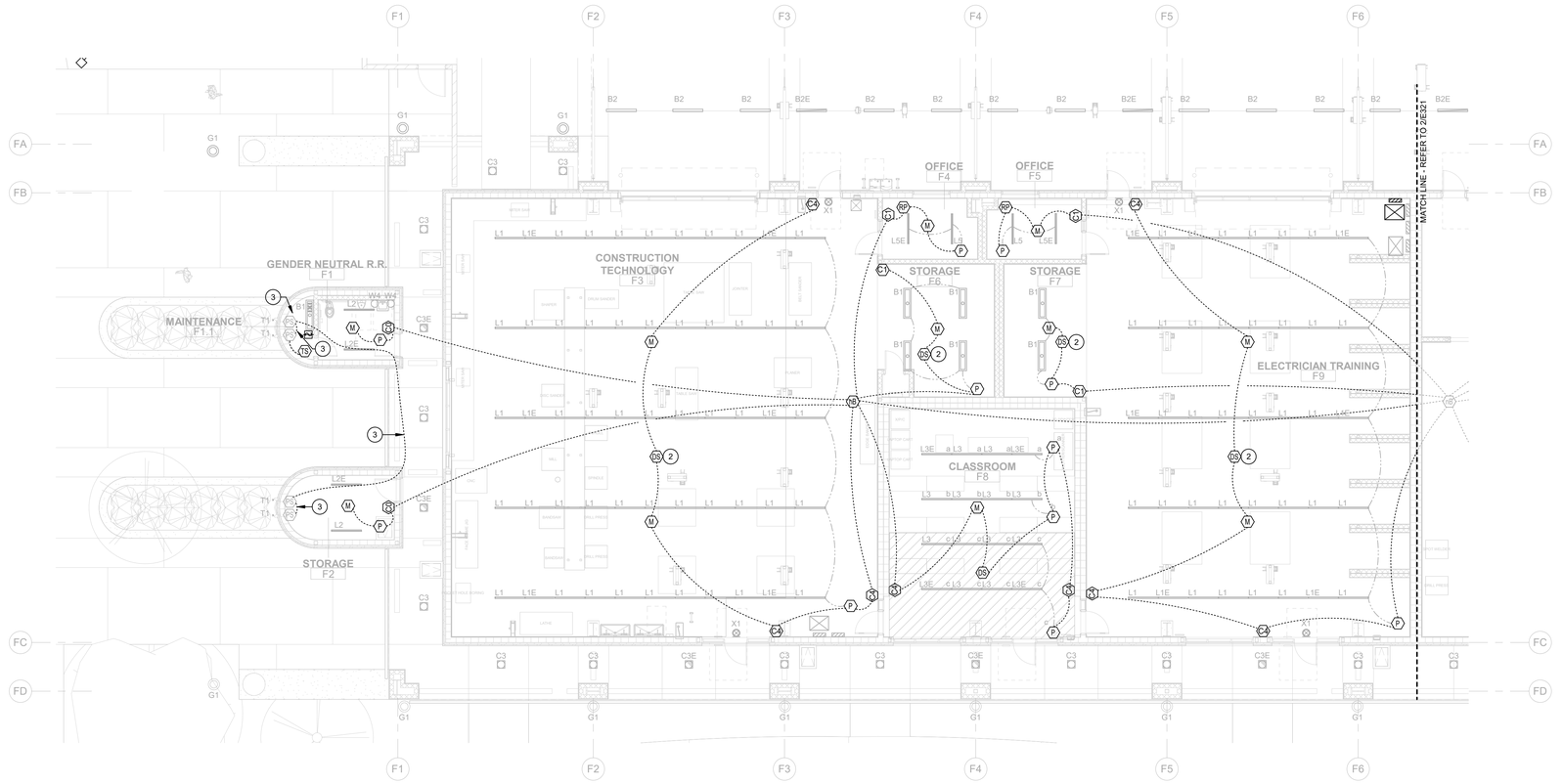

LIGHTING CONTROL PLAN - BUILDING 'F' (WEST)

1/8" = 1'-0" | 1

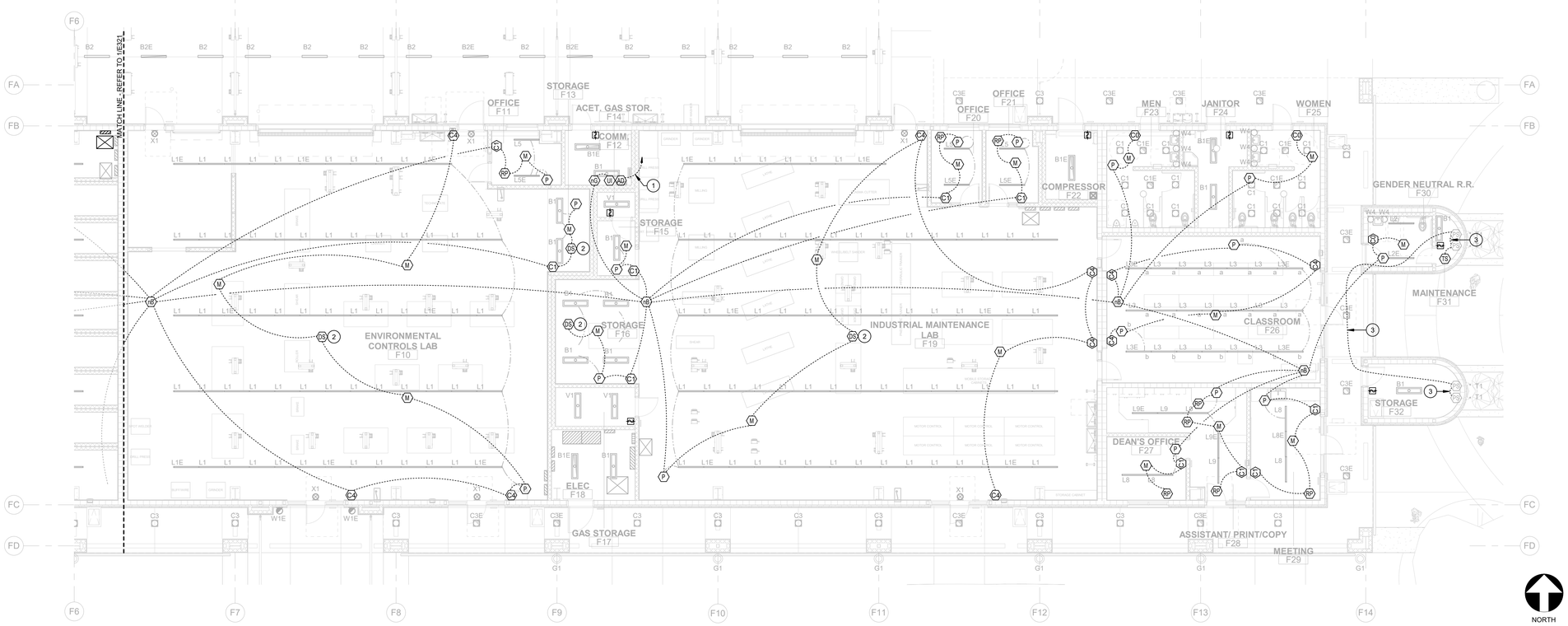

LIGHTING CONTROL PLAN - BUILDING 'F' (EAST)

1/8" = 1'-0" | 2

KEYNOTES

1. PROVIDE ONE CATEGORY 5e CABLE TO LAN SWITCH.
2. ENTIRE ROOM SHALL BE CONSIDERED PRIMARY DAYLIT ZONE. ALL FIXTURES IN THIS ROOM ARE CONTROLLED BY NETWORK DAYLIGHTING SENSOR.
3. PROVIDE CATEGORY 5e CABLE TO DAISY CHAIN LED TAPE POWER SUPPLIES FOR DMX CONNECTIVITY.

LIGHTING WIRING LEGEND

- ONE 3/4"C WITH CLASS 2 CATEGORY 5E PLENUM RATED CABLE GREEN IN COLOR WITH RJ45 CONNECTORS ON EACH END
- TYPE MC-PCS MC LUMINARY CABLE, REFER TO LIGHTING PLAN

LIGHTING SYMBOL LEGEND

PRIMARY SIDELIT ZONE:

- (M) NETWORK CEILING MOUNTED OCCUPANCY SENSOR
- (CO) SINGLE-ZONE NETWORK MANUAL CONTROL STATION AT +48" TO TOP OF OUTLET BOX
- (C1) SINGLE-ZONE NETWORK DIMMING MANUAL CONTROL STATION AT +48" TO TOP OF OUTLET BOX
- (C4) FOUR-SCENE NETWORK DIMMING MANUAL CONTROL STATION AT +48" TO TOP OF OUTLET BOX
- (DS) NETWORK DAYLIGHTING SENSOR WITHIN DAYLIT ZONE
- (P) NETWORK DIMMING CONTROL RELAY
- (RP) NETWORK PLUG LOAD CONTROLLER RELAY
- (xG) NETWORK GATEWAY
- (xB) NETWORK BRIDGE
- (AD) NETWORK AUTOMATED DEMAND RESPONSIVE CONTROL INTERFACE
- [$] WALL SWITCH WITH INTEGRAL OCCUPANCY SENSOR AT +48" TO TOP OF OUTLET BOX
- $ WALL SWITCH AT +48" TO TOP OF OUTLET BOX
- (UI) nLIGHT GRAPHICAL USER INTERFACE
- (TS) DMX 512 WALL CONTROLLER WITH TOUCH SCREEN LCD, ACUITY CONTROLS FRESCO #EZSOLO OR EQUIVALENT.

GENERAL NOTES

A. NETWORK DAYLIGHT SENSORS FOR AUTOMATIC DIMMING WITHIN A DAYLIT ZONE SHALL BE CALIBRATED SUCH THAT LIGHTING POWER FOR THE LIGHTING FIXTURES WITHIN THAT DAYLIT ZONE SHALL BE REDUCED BY 65% WHEN DAYLIT ILLUMINANCE IS 150% OF ILLUMINANCE RECEIVED FROM THE GENERAL LIGHTING SYSTEM AT FULL POWER.

B. LIGHTING CONTROLS SHALL BE DEMAND RESPONSIVE AND SHALL AUTOMATICALLY REDUCE BUILDING LIGHTING POWER DEMAND BY 15% IN RESPONSE TO A DEMAND RESPONSE SIGNAL PER 2019 CA ENERGY CODE SECTION 130.1 (e).

C. CONDUIT AND CABLES SHALL BE CONCEALED WITHIN WALLS AND ABOVE CEILINGS.

D. ALL EXPOSED CONDUIT IN ROOMS WITH NO CEILINGS SHALL BE ROUTED PARALLEL OR PERPENDICULAR TO TRUSSES AND GIRDERS. LINES SHOWN AS SPLINES AND ARCS ARE FOR DIAGRAMATIC PURPOSES ONLY.

FOR BID ONLY

Teter, LLP expressly reserves its common law copyright and other property rights in these plans. This document, the ideas and designs incorporated herein, as an instrument of professional service, is not to be used in whole or part, for any other project without prior written authorization.

MARK	DATE	DESCRIPTION
	11/1/22	DSA BACKCHECK

REGISTERED PROFESSIONAL ENGINEER COREY M. STONE No. E23953 Exp. 8-31-23 ELECTRICAL

TETER, LLP
FRESNO HEADQUARTERS
VISALIA | BAKERSFIELD | MODESTO | SAN LUIS OBISPO
ARCHITECTS ENGINEERS CONNECTED

TETER

TULARE CAMPUS CTE
COLLEGE OF THE SEQUOIAS
4999 E. BARDSLEY AVE.
TULARE, CA

DRAWING TITLE
LIGHTING CONTROL PLAN - BUILDING 'F'

PROJECT NO.
21-12032

DRAWING
E321

PLOT DATE: 11/2/2022 9:53:50 AM

\\etr-file1\Users\corey.stone\Documents\12032-E-COS Tulare CTE_corey.stone.rvt

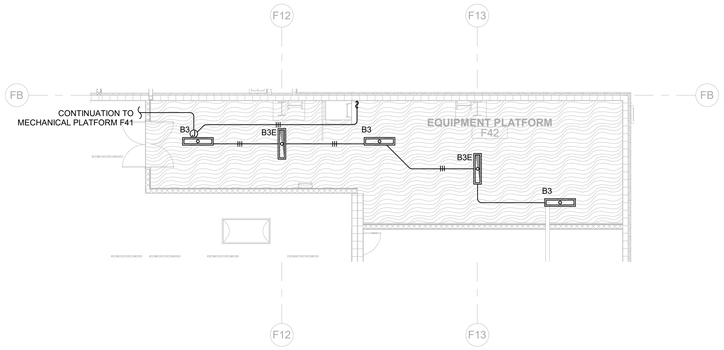

NORTH

LIGHTING POWER/CONTROL PLAN - BUILDING F MECHANICAL PLATFORM EAST — 1/8" = 1'-0" — 1

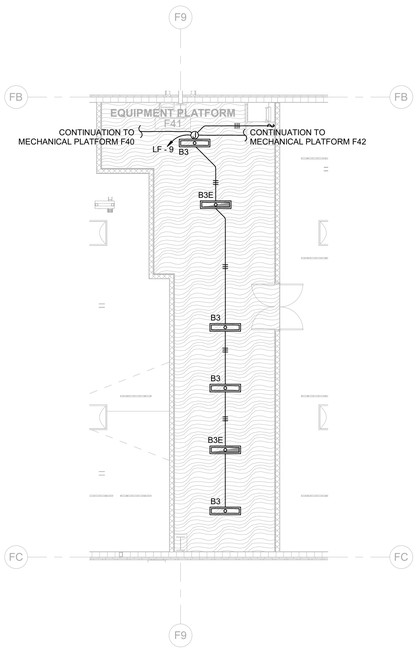

NORTH

LIGHTING POWER/CONTROL PLAN - BUILDING F MECHANICAL PLATFORM CENTER — 1/8" = 1'-0" — 3

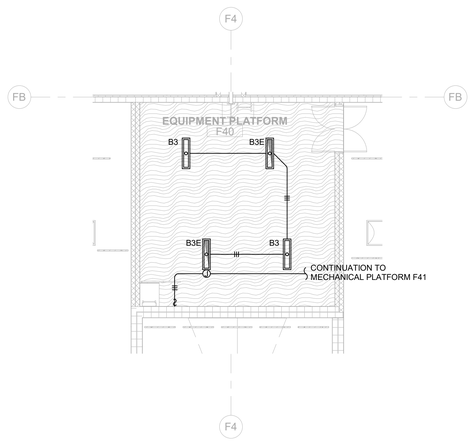

NORTH

LIGHTING POWER/CONTROL PLAN - BUILDING F MECHANICAL PLATFORM WEST — 1/8" = 1'-0" — 2

KEYNOTES

LIGHTING WIRING LEGEND

——— LIGHTING BRANCH CIRCUIT IN EMT CONDUIT CONSISTING OF THE FOLLOWING BRANCH CIRCUIT CONDUCTORS:
1. HOT - 1#12 CU THHN (BROWN, ORANGE OR YELLOW)
2. NEUTRAL - 1#12 CU THHN (WHITE WITH COLORED STRIPE)
3. EQUIPMENT GROUNDING - 1#12 CU THHN (GREEN)

LIGHTING SYMBOL LEGEND

[$] WALL SWITCH WITH INTEGRAL OCCUPANCY SENSOR AT +48" TO TOP OF OUTLET BOX

GENERAL NOTES

A. CIRCUITS SUPPLYING EMERGENCY LIGHTING FIXTURES SHALL BE SUPPLIED BY A CONTROLLED HOT CONDUCTOR AND A CONSTANT HOT CONDUCTOR OF THE SAME BRANCH CIRCUIT.

B. CONDUIT AND CABLES SHALL BE CONCEALED WITHIN WALLS AND ABOVE CEILINGS.

C. ALL EXPOSED CONDUIT IN ROOMS WITH NO CEILINGS SHALL BE ROUTED PARALLEL OR PERPENDICULAR TO TRUSSES AND GIRDERS. LINES SHOWN AS SPLINES AND ARCS ARE FOR DIAGRAMATIC PURPOSES ONLY.

FOR BID ONLY

Teter, LLP expressly reserves its common law copyright and other property rights in these plans. This document, the ideas and designs incorporated herein, as an instrument of professional service, is not to be used in whole or part, for any other project without prior written authorization.

MARK	DATE	DESCRIPTION
	11/1/22	DSA BACKCHECK

TETER, LLP
ARCHITECTS ENGINEERS CONSULTANTS
FRESNO HEADQUARTERS
VISALIA | BAKERSFIELD | MODESTO | SAN LUIS OBISPO

TULARE CAMPUS CTE
COLLEGE OF THE SEQUOIAS
4999 E. BARDSLEY AVE.
TULARE, CA

DRAWING TITLE
LIGHTING PLAN - BUILDING 'F' MECHANICAL PLATFORMS

PROJECT NO.
21-12032

DRAWING
E322

PLOT DATE: 11/2/2022 9:53:54 AM

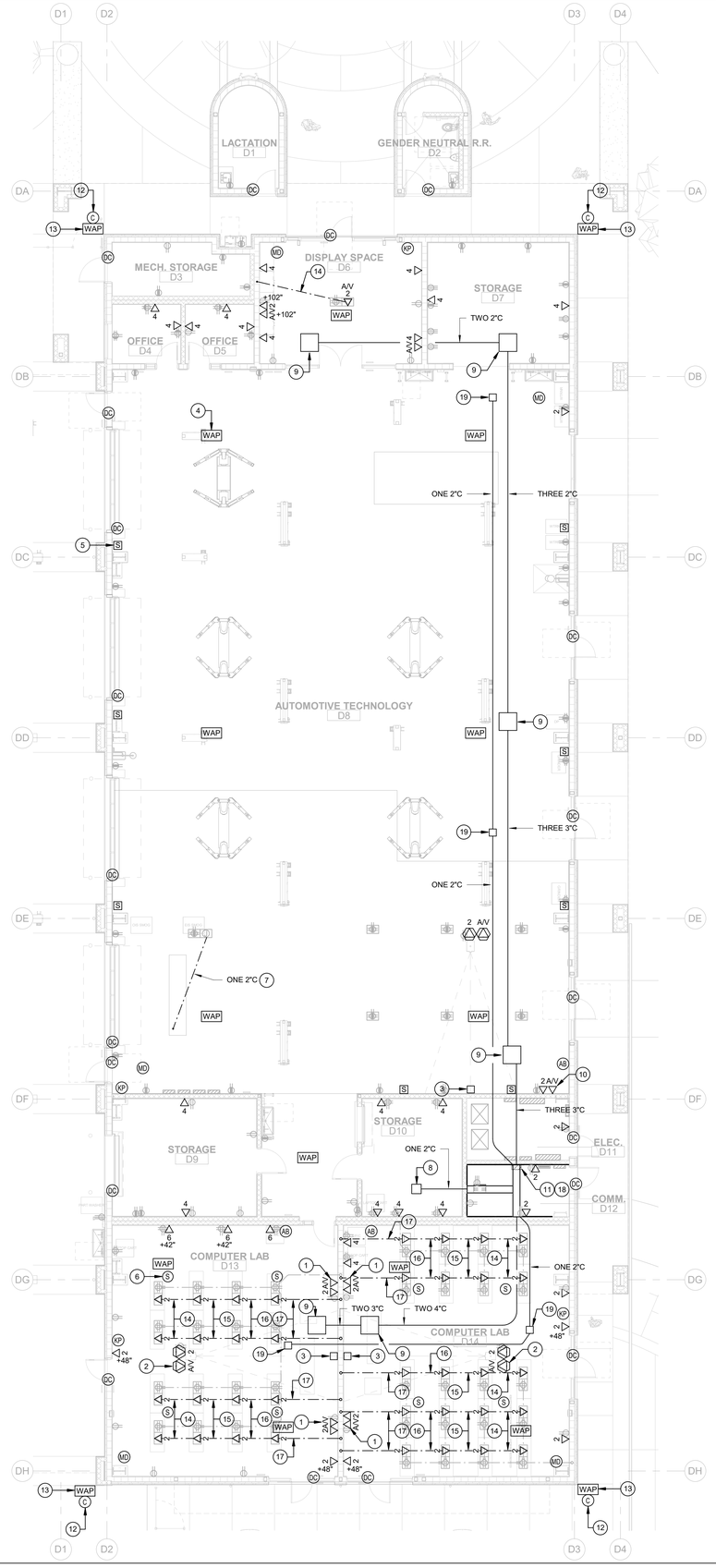

KEYNOTES

1. PROVIDE AN EXTRA LARGE 4S BACK BOX WITH TWO 1-1/2"C FROM A/V OUTLET TO PULL BOX AT CEILING FOR ROUTING TO PROJECTOR.
2. PROVIDE TWO 1-1/2"C TO PULL BOX ABOVE CEILING FOR ROUTING TO PROJECTOR.
3. PROVIDE PULL BOX AT CEILING FOR 1-1/2"C TO INTERFACE WITH A/V WALL OUTLETS AND PROJECTOR.
4. PROVIDE JUNCTION BOX WITH 2-PORT RJ45 FACEPLATE AT WIRELESS ACCESS POINT LOCATION AND TWO TYPE 'D' CABLES ROUTED IN 1"C BACK TO NEAREST PULLBOX, TYPICAL FOR ALL WIRELESS ACCESS POINT LOCATIONS.
5. PROVIDE JUNCTION BOX WITH 1-PORT FACEPLATE AT WALL MOUNTED SPEAKER LOCATION AND ONE TYPE 'D' CABLE ROUTED IN 1"C BACK TO NEAREST PULL BOX, TYPICAL FOR ALL WALL MOUNTED SPEAKER LOCATIONS.
6. PROVIDE JUNCTION BOX WITH 1-PORT FACEPLATE AT CEILING MOUNTED PENDANT SPEAKER LOCATION AND ONE TYPE 'D' CABLE ROUTED IN 1"C BACK TO NEAREST PULL BOX, TYPICAL FOR ALL CEILING MOUNTED PENDANT SPEAKER LOCATIONS.
7. PROVIDE ONE 2"C FROM FLOOR BOX FOR EIS SMOG CONNECTION TO DYNAMOMETER ROLLER ASSYMBLY TO FACILIATE INSTALLATION OF RS-232 SERIAL CABLE.
8. PROVIDE 16"x16"x6" PULL BOX TO ROUTE DATA CABLES TO TELECOMMUNICATIONS ROOM.
9. PROVIDE 30"x30"x6" PULL BOX TO ROUTE DATA CABLES TO TELECOMMUNICATIONS ROOM.
10. PROVIDE AN EXTRA LARGE 4S BACK BOX WITH TWO 1-1/2"C TO PROJECTOR.
11. PROVIDE VERTICAL CABLE RUNWAY FROM FLOOR TO +90" A.F.F.
12. PROVIDE WEATHERPROOF 4S BOX FLUSH MOUNTED ON INSIDE OF BUILDING PARAPET. PROVIDE ONE 1"C FROM BOX BACK TO NEAREST PULL BOX AND INSTALL ONE TYPE 'D' CABLE BACK TO BUILDING 'IDF'.
13. PROVIDE WEATHERPROOF 4S BOX FLUSH MOUNTED ON INSIDE OF BUILDING PARAPET. PROVIDE ONE 1"C FROM BOX BACK TO NEAREST PULL BOX AND INSTALL TWO TYPE 'D' CABLES BACK TO BUILDING 'IDF'.
14. ONE 1-1/4"C WITH TWO TYPE 'D' CABLES.
15. ONE 1-1/4"C WITH FOUR TYPE 'D' CABLES.
16. ONE 1-1/4"C WITH SIX TYPE 'D' CABLES.
17. ONE 1-1/4"C WITH EIGHT TYPE 'D' CABLES.
18. STUB ALL UNDERGROUND SIGNAL CONDUITS WITHIN HATCH AREA TO UTILIZE VERTICAL CABLE RUNWAY.
19. PROVIDE 12"x12"x4" PULL BOX TO ROUTE SECURITY CABLES TO TELECOMMUNICATIONS ROOM.

TELECOMMUNICATION PATHWAY NOTES

A. CONDUIT AND CABLES FOR TELECOMMUNICATION OUTLETS SHALL BE CONCEALED WITHIN WALLS AND ABOVE CEILINGS.

B. TELECOMMUNICATION OUTLET BOXES SHALL BE 5" SQUARE BY 2-7/8" DEEP WITH A SINGLE-GANG BOX EXTENSION THAT IS MOUNTED FLUSH WITH THE FINISHED WALL.

C. PROVIDE ONE 1"C STUBBED FROM EACH TELECOMMUNICATION OUTLET BOX TO CLOSEST PULLBOX.

D. PROVIDE THREADED SET SCREW CONNECTORS WITH POLYPROPYLENE BUSHINGS AT EACH END OF CONDUIT SYSTEMS USED FOR TELECOMMUNICATION CABLE INSTALLATION. BUSHINGS SHALL BE INSTALLED AND INSPECTED PRIOR TO CABLE INSTALLATION.

E. CABLE TRAYS SHALL COMPLY WITH NEMA VE 1 STANDARDS AND SHALL BE INSTALLED IN ACCORDANCE WITH NEMA VE 2 INSTALLATION GUIDELINES.

TELECOMMUNICATION CABLING NOTES

A. EACH TELECOMMUNICATION CABLE SHALL BE HOMERUN FROM THE TELECOMMUNICATION OUTLET TO A PATCH PANEL LOCATED IN THE TELECOMMUNICATION ROOM.

B. TELECOMMUNICATION CABLES SHALL BE NEATLY BUNDLED WITH VELCRO STRAPS AT 36"O.C.

C. TELECOMMUNICATION CABLES SHALL BE INDEPENDENTLY SUPPORTED FROM J-HOOKS WITHIN THE ACCESSIBLE ATTIC SPACE WHERE THEY ARE NOT WITHIN CONDUIT OR SUPPORTED ON CABLE TRAY.

D. TELECOMMUNICATION CABLES SHALL BE TERMINATED WITH MODULAR JACKS ON PATCH PANELS IN THE TELECOMMUNICATION ENCLOSURE AND ON MODULAR JACKS AT THE TELECOMMUNICATION OUTLETS.

E. TELECOMMUNICATION CABLE SERVING WIRELESS ACCESS POINTS SHALL BE TERMINATED WITH PLUG TYPE CONNECTORS AT THE LOCATION OF THE WIRELESS ACCESS POINT.

SECURITY AND ACCESS ROUGH-IN NOTES

A. SECURITY AND ACCESS SYSTEM ROUGH-IN REQUIREMENTS:

a. AT SWING DOOR CONTACT LOCATIONS - DRILL 1/2" HOLE IN STRIKE SIDE OF DOOR FRAME AND THROUGH HEADER. PROVIDE 3/4" CONDUIT FROM OPENING IN DOOR FRAME TO JUNCTION BOX ABOVE DOOR AND PROVIDE ONE 3/4"C FROM JUNCTION BOX TO NEAREST PULLBOX WITH A PULL WIRE. REFER TO DETAIL 12/E602.

b. AT ROLL-UP AND BIFOLD DOOR CONTACT LOCATIONS - MOUNT DOOR CONTANCT WITH ARMORED CABLE TO FLOOR NEAR DOOR EDGE. PROVIDE 3/4" CONDUIT FROM RECESSED JUNCTION BOX AND PROVIDE ONE 3/4"C FROM JUNCTION BOX TO NEAREST PULLBOX WITH A PULL WIRE. REFER TO DETAIL 16/E602.

c. AT MOTION DETECTOR LOCATIONS - INSTALL A SINGLE-GANG OUTLET BOX WITH A SINGLE-GANG TRIM-RING IN WALL AT 96" A.F.F., WITH ONE 3/4"C TO NEAREST PULLBOX WITH A PULL WIRE.

d. AT KEYPAD LOCATIONS - INSTALL A SINGLE-GANG OUTLET BOX WITH A SINGLE-GANG TRIM-RING IN WALL AT 48" A.F.F. TO TOP OF BOX, INSTALL ONE 3/4"C TO NEAREST PULLBOX WITH A PULL WIRE.

e. AT VIDEO SURVEILLANCE CAMERA LOCATIONS - PROVIDE A DOUBLE-GANG OUTLET BOX WITH A SINGLE-GANG TRIM RING, HEIGHT AND LOCATION AS INDICATED, INSTALL ONE 1"C TO NEAREST CABLE TRAY OR PULL BOX.

GENERAL NOTES

A. ALL EXPOSED CONDUIT IN ROOMS WITH NO CEILINGS SHALL BE ROUTED PARALLEL OR PERPENDICULAR TO TRUSSES AND GIRDERS. LINES SHOWN AS SPLINES AND ARCS ARE FOR DIAGRAMATIC PURPOSES ONLY.

NORTH

SIGNAL PLAN - BUILDING 'D'

1/8" = 1'-0"

1

FOR BID ONLY

Teter, LLP expressly reserves its common law copyright and other property rights in these plans. This document, the ideas and designs incorporated herein, as an instrument of professional service, is not to be used in whole or part, for any other project without prior written authorization.

MARK	DATE	DESCRIPTION
	11/1/22	DSA BACKCHECK

STATE OF CALIFORNIA — REGISTERED PROFESSIONAL ENGINEER — COREY M. STONE — No. 072953 — EXP. 6-30-23 — ELECTRICAL

TETER, LLP
FRESNO HEADQUARTERS
VISALIA | BAKERSFIELD | MODESTO | SAN LUIS OBISPO
ARCHITECTS ENGINEERS CONNECTED

TULARE CAMPUS CTE
COLLEGE OF THE SEQUOIAS
4999 E. BARDSLEY AVE.
TULARE, CA

DRAWING TITLE
SIGNAL PLAN - BUILDING 'D'

PROJECT NO.
21-12032

DRAWING
E400

\\tet-file1\Users\corey.stone\Documents\12032-E-COS Tulare CTE_corey.stone.rvt

PLOT DATE: 11/2/2022 9:54:14 AM

\\tet-file1\Users\corey.stone\Documents\12032-E-COS Tulare CTE_corey.stone.rvt

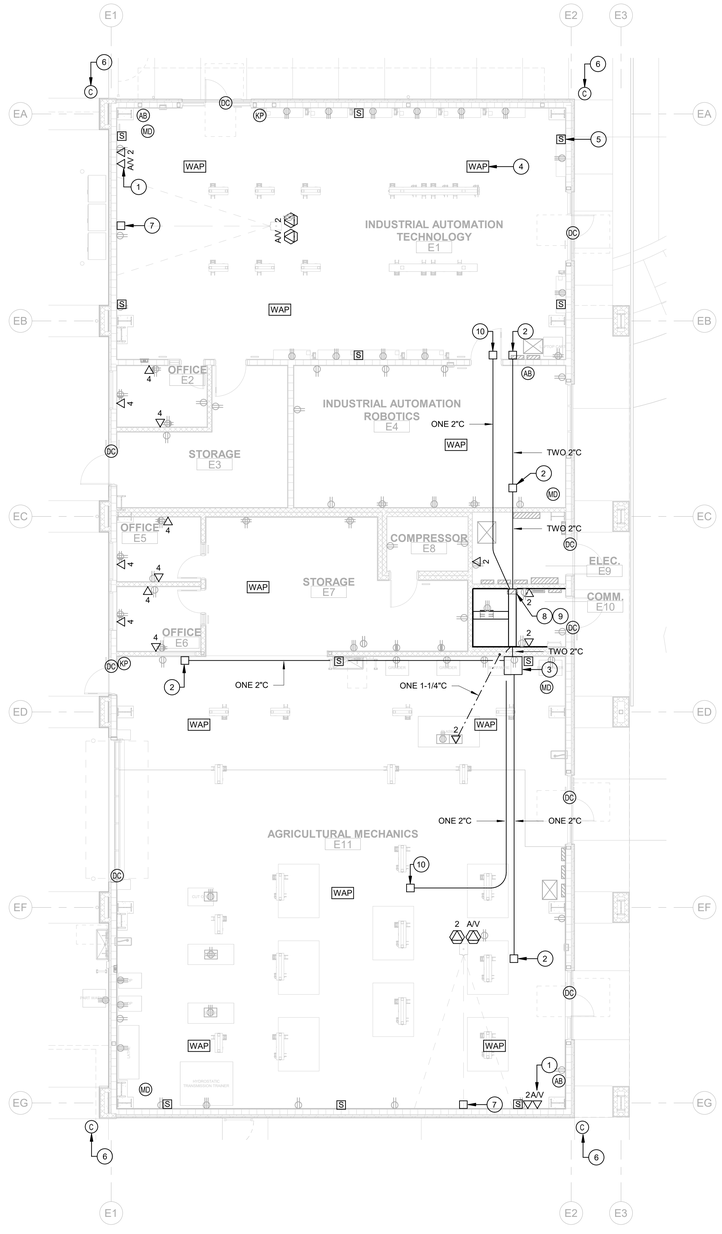

KEYNOTES

1. PROVIDE AN EXTRA LARGE 4S BACK BOX WITH TWO 1-1/2"C TO PROJECTOR.
2. PROVIDE 16"x16"x6" PULL BOX TO ROUTE DATA CABLES TO TELECOMMUNICATIONS ROOM.
3. PROVIDE 30"x30"x6" PULL BOX TO ROUTE DATA CABLES TO TELECOMMUNICATIONS ROOM.
4. PROVIDE JUNCTION BOX WITH 2-PORT RJ45 FACEPLATE AT WIRELESS ACCESS POINT LOCATION AND TWO TYPE 'D' CABLES ROUTED IN 1-1/2"C BACK TO NEAREST PULLBOX, TYPICAL FOR ALL WIRELESS ACCESS POINT LOCATIONS.
5. PROVIDE JUNCTION BOX WITH 1-PORT FACEPLATE AT WALL MOUNTED SPEAKER LOCATION AND ONE TYPE 'D' CABLE ROUTED IN 1-1/2"C BACK TO NEAREST PULL BOX, TYPICAL FOR ALL WALL MOUNTED SPEAKER LOCATIONS.
6. PROVIDE WEATHERPROOF 4S BOX FLUSH MOUNTED ON INSIDE OF BUILDING PARAPET. PROVIDE ONE 1"C FROM BOX BACK TO NEAREST PULL BOX AND INSTALL ONE TYPE 'D' CABLE BACK TO BUILDING 'IDF'.
7. PROVIDE PULL BOX AT CEILING FOR 1-1/2"C TO INTERFACE WITH A/V WALL OUTLETS AND PROJECTOR.
8. PROVIDE VERTICAL CABLE RUNWAY FROM FLOOR TO +90" A.F.F.
9. STUB ALL UNDERGROUND SIGNAL CONDUITS WITHIN HATCH AREA TO UTILIZE VERTICAL CABLE RUNWAY.
10. PROVIDE 12"x12"x4" PULL BOX TO ROUTE SECURITY CABLES TO TELECOMMUNICATIONS ROOM.

TELECOMMUNICATION PATHWAY NOTES

A. CONDUIT AND CABLES FOR TELECOMMUNICATION OUTLETS SHALL BE CONCEALED WITHIN WALLS AND ABOVE CEILINGS.

B. TELECOMMUNICATION OUTLET BOXES SHALL BE 5" SQUARE BY 2-7/8" DEEP WITH A SINGLE-GANG BOX EXTENSION THAT IS MOUNTED FLUSH WITH THE FINISHED WALL.

C. PROVIDE ONE 1"C STUBBED FROM EACH TELECOMMUNICATION OUTLET BOX TO CLOSEST PULLBOX.

D. PROVIDE THREADED SET SCREW CONNECTORS WITH POLYPROPYLENE BUSHINGS AT EACH END OF CONDUIT SYSTEMS USED FOR TELECOMMUNICATION CABLE INSTALLATION. BUSHINGS SHALL BE INSTALLED AND INSPECTED PRIOR TO CABLE INSTALLATION.

E. CABLE TRAYS SHALL COMPLY WITH NEMA VE 1 STANDARDS AND SHALL BE INSTALLED IN ACCORDANCE WITH NEMA VE 2 INSTALLATION GUIDELINES.

TELECOMMUNICATION CABLING NOTES

A. EACH TELECOMMUNICATION CABLE SHALL BE HOMERUN FROM THE TELECOMMUNICATION OUTLET TO A PATCH PANEL LOCATED IN THE TELECOMMUNICATION ROOM.

B. TELECOMMUNICATION CABLES SHALL BE NEATLY BUNDLED WITH VELCRO STRAPS AT 36"O.C.

C. TELECOMMUNICATION CABLES SHALL BE INDEPENDENTLY SUPPORTED FROM J-HOOKS WITHIN THE ACCESSIBLE ATTIC SPACE WHERE THEY ARE NOT WITHIN CONDUIT OR SUPPORTED ON CABLE TRAY.

D. TELECOMMUNICATION CABLES SHALL BE TERMINATED WITH MODULAR JACKS ON PATCH PANELS IN THE TELECOMMUNICATION ENCLOSURE AND ON MODULAR JACKS AT THE TELECOMMUNICATION OUTLETS.

E. TELECOMMUNICATION CABLE SERVING WIRELESS ACCESS POINTS SHALL BE TERMINATED WITH PLUG TYPE CONNECTORS AT THE LOCATION OF THE WIRELESS ACCESS POINT.

SECURITY AND ACCESS ROUGH-IN NOTES

A. SECURITY AND ACCESS SYSTEM ROUGH-IN REQUIREMENTS:

a. AT SWING DOOR CONTACT LOCATIONS - DRILL 1/2" HOLE IN STRIKE SIDE OF DOOR FRAME AND THROUGH HEADER. PROVIDE 3/4" CONDUIT FROM OPENING IN DOOR FRAME TO JUNCTION BOX ABOVE DOOR AND PROVIDE ONE 3/4"C FROM JUNCTION BOX TO NEAREST PULLBOX WITH A PULL WIRE. REFER TO DETAIL 12/E602.

b. AT ROLL-UP AND BIFOLD DOOR CONTACT LOCATIONS - MOUNT DOOR CONTANCT WITH ARMORED CABLE TO FLOOR NEAR DOOR EDGE. PROVIDE 3/4" CONDUIT FROM RECESSED JUNCTION BOX AND PROVIDE ONE 3/4"C FROM JUNCTION BOX TO NEAREST PULLBOX WITH A PULL WIRE. REFER TO DETAIL 16/E602.

c. AT MOTION DETECTOR LOCATIONS - INSTALL A SINGLE-GANG OUTLET BOX WITH A SINGLE-GANG TRIM-RING IN WALL AT 96" A.F.F., WITH ONE 3/4"C TO NEAREST PULLBOX WITH A PULL WIRE.

d. AT KEYPAD LOCATIONS - INSTALL A SINGLE-GANG OUTLET BOX WITH A SINGLE-GANG TRIM-RING IN WALL AT 48" A.F.F. TO TOP OF BOX, INSTALL ONE 3/4"C TO NEAREST PULLBOX WITH A PULL WIRE.

e. AT VIDEO SURVEILLANCE CAMERA LOCATIONS - PROVIDE A DOUBLE-GANG OUTLET BOX WITH A SINGLE-GANG TRIM RING, HEIGHT AND LOCATION AS INDICATED, INSTALL ONE 1"C TO NEAREST CABLE TRAY OR PULL BOX.

GENERAL NOTES

A. ALL EXPOSED CONDUIT IN ROOMS WITH NO CEILINGS SHALL BE ROUTED PARALLEL OR PERPENDICULAR TO TRUSSES AND GIRDERS. LINES SHOWN AS SPLINES AND ARCS ARE FOR DIAGRAMATIC PURPOSES ONLY.

NORTH

SIGNAL PLAN - BUILDING 'E'

1/8" = 1'-0"

1

FOR BID ONLY

Teter, LLP expressly reserves its common law copyright and other property rights in these plans. This document, the ideas and designs incorporated herein, as an instrument of professional service, is not to be used in whole or part, for any other project without prior written authorization.

MARK	DATE	DESCRIPTION
	11/1/22	DSA BACKCHECK

REGISTERED PROFESSIONAL ENGINEER COREY M. STONE No. E23263 Exp. 6-30-23 ELECTRICAL

TETER, LLP
FRESNO HEADQUARTERS
VISALIA | BAKERSFIELD | MODESTO | SAN LUIS OBISPO
ARCHITECTS ENGINEERS CONNECTED

TULARE CAMPUS CTE
COLLEGE OF THE SEQUOIAS
4999 E. BARDSLEY AVE.
TULARE, CA

DRAWING TITLE
SIGNAL PLAN - BUILDING 'E'

PROJECT NO.
21-12032

DRAWING
E410

PLOT DATE: 11/2/2022 9:54:27 AM

\\tet-file1\Users\corey.stone\Documents\12032-E-COS Tulare CTE_corey.stone.rvt

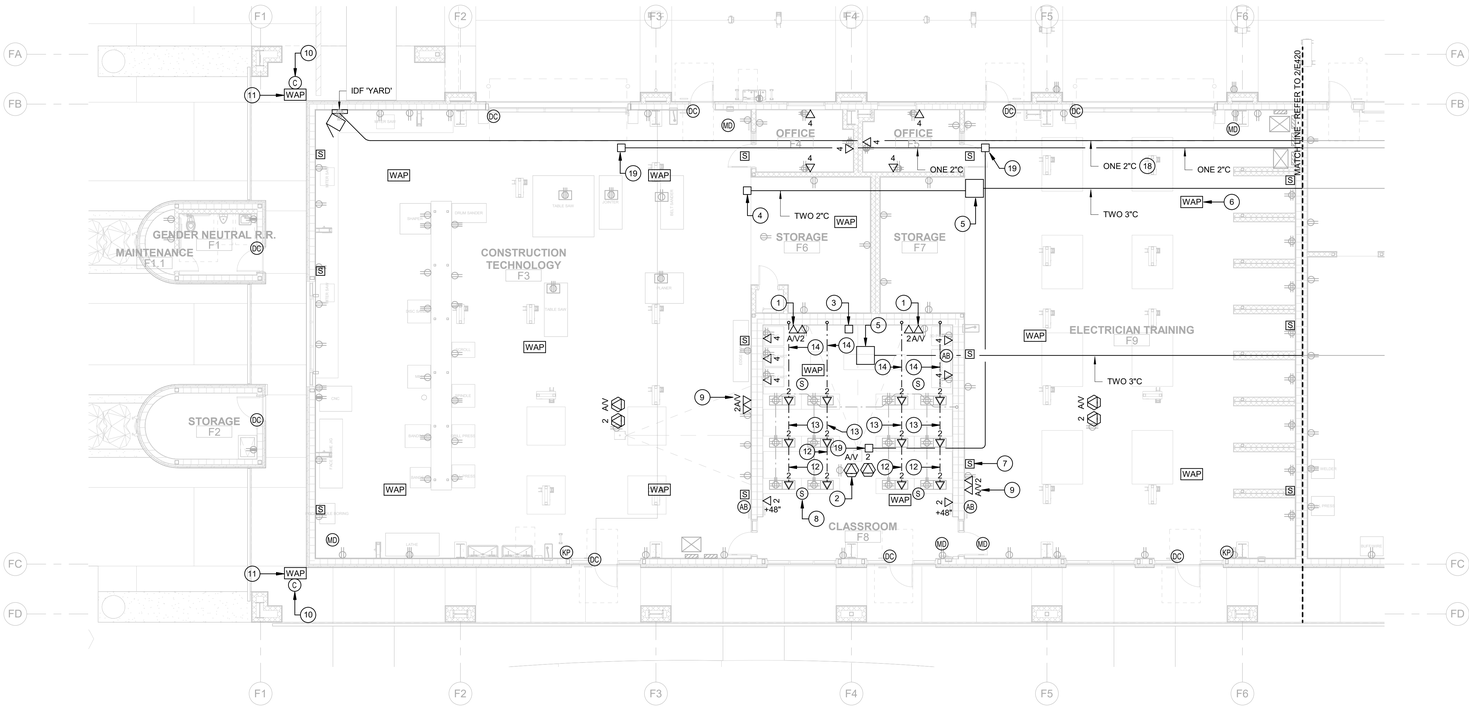

NORTH

SIGNAL PLAN - BUILDING 'F' (WEST) — 1/8" = 1'-0" | 1

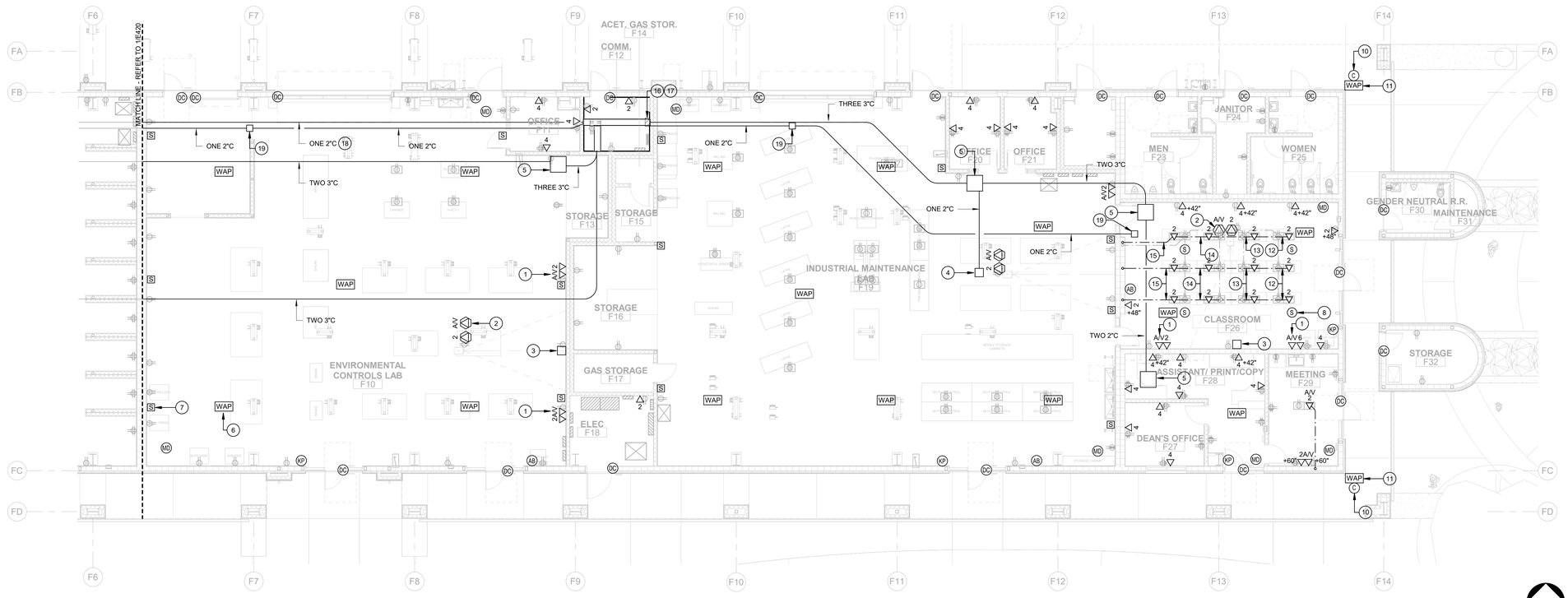

NORTH

SIGNAL PLAN - BUILDING 'F' (EAST) — 1/8" = 1'-0" | 2

KEYNOTES

1. PROVIDE AN EXTRA LARGE 4S BACK BOX WITH TWO 1-1/2"C FROM A/V OUTLET TO PULL BOX AT CEILING FOR ROUTING TO PROJECTOR.
2. PROVIDE TWO 1-1/2"C TO PULL BOX ABOVE CEILING FOR ROUTING TO PROJECTOR.
3. PROVIDE PULL BOX AT CEILING FOR 1-1/2"C TO INTERFACE WITH A/V WALL OUTLETS AND PROJECTOR.
4. PROVIDE 16"x16"x6" PULL BOX TO ROUTE DATA CABLES TO TELECOMMUNICATIONS ROOM.
5. PROVIDE 30"x30"x6" PULL BOX TO ROUTE DATA CABLES TO TELECOMMUNICATIONS ROOM.
6. PROVIDE JUNCTION BOX WITH 2-PORT RJ45 FACEPLATE AT WIRELESS ACCESS POINT LOCATION AND TWO TYPE 'D' CABLES ROUTED IN 1-1/2"C BACK TO NEAREST PULLBOX, TYPICAL FOR ALL WIRELESS ACCESS POINT LOCATIONS.
7. PROVIDE JUNCTION BOX WITH 1-PORT FACEPLATE AT WALL MOUNTED SPEAKER LOCATION AND ONE TYPE 'D' CABLE ROUTED IN 1-1/2"C BACK TO NEAREST PULL BOX, TYPICAL FOR ALL WALL MOUNTED SPEAKER LOCATIONS.
8. PROVIDE JUNCTION BOX WITH 1-PORT FACEPLATE AT CEILING MOUNTED PENDANT SPEAKER LOCATION AND ONE TYPE 'D' CABLE ROUTED IN 1-1/2"C BACK TO NEAREST PULL BOX, TYPICAL FOR ALL CEILING MOUNTED PENDANT SPEAKER LOCATIONS.
9. PROVIDE AN EXTRA LARGE 4S BACK BOX WITH TWO 1-1/2"C TO PROJECTOR.
10. PROVIDE WEATHERPROOF 4S BOX FLUSH MOUNTED ON INSIDE OF BUILDING PARAPET. PROVIDE ONE 1"C FROM BOX BACK TO NEAREST PULL BOX AND INSTALL ONE TYPE 'D' CABLE BACK TO BUILDING 'IDF'.
11. PROVIDE WEATHERPROOF 4S BOX FLUSH MOUNTED ON INSIDE OF BUILDING PARAPET. PROVIDE ONE 1"C FROM BOX BACK TO NEAREST PULL BOX AND INSTALL TWO TYPE 'D' CABLES BACK TO BUILDING 'IDF'.
12. ONE 1-1/4"C WITH TWO TYPE 'D' CABLES.
13. ONE 1-1/4"C WITH FOUR TYPE 'D' CABLES.
14. ONE 1-1/4"C WITH SIX TYPE 'D' CABLES.
15. ONE 1-1/4"C WITH EIGHT TYPE 'D' CABLES.
16. PROVIDE VERTICAL CABLE RUNWAY FROM FLOOR TO +90" A.F.F.
17. STUB ALL UNDERGROUND SIGNAL CONDUITS WITHIN HATCH AREA TO UTILIZE VERTICAL CABLE RUNWAY.
18. PROVIDE ONE 2"C WITH ONE TYPE 'FO' CABLE.
19. PROVIDE 12"x12"x4" PULL BOX TO ROUTE SECURITY CABLES TO TELECOMMUNICATIONS ROOM.

TELECOMMUNICATION PATHWAY NOTES

A. CONDUIT AND CABLES FOR TELECOMMUNICATION OUTLETS SHALL BE CONCEALED WITHIN WALLS AND ABOVE CEILINGS.

B. TELECOMMUNICATION OUTLET BOXES SHALL BE 5" SQUARE BY 2-7/8" DEEP WITH A SINGLE-GANG BOX EXTENSION THAT IS MOUNTED FLUSH WITH THE FINISHED WALL.

C. PROVIDE ONE 1"C STUBBED FROM EACH TELECOMMUNICATION OUTLET BOX TO CLOSEST PULLBOX.

D. PROVIDE THREADED SET SCREW CONNECTORS WITH POLYPROPYLENE BUSHINGS AT EACH END OF CONDUIT SYSTEMS USED FOR TELECOMMUNICATION CABLE INSTALLATION. BUSHINGS SHALL BE INSTALLED AND INSPECTED PRIOR TO CABLE INSTALLATION.

E. CABLE TRAYS SHALL COMPLY WITH NEMA VE 1 STANDARDS AND SHALL BE INSTALLED IN ACCORDANCE WITH NEMA VE 2 INSTALLATION GUIDELINES.

TELECOMMUNICATION CABLING NOTES

A. EACH TELECOMMUNICATION CABLE SHALL BE HOMERUN FROM THE TELECOMMUNICATION OUTLET TO A PATCH PANEL LOCATED IN THE TELECOMMUNICATION ROOM.

B. TELECOMMUNICATION CABLES SHALL BE NEATLY BUNDLED WITH VELCRO STRAPS AT 36"O.C.

C. TELECOMMUNICATION CABLES SHALL BE INDEPENDENTLY SUPPORTED FROM J-HOOKS WITHIN THE ACCESSIBLE ATTIC SPACE WHERE THEY ARE NOT WITHIN CONDUIT OR SUPPORTED ON CABLE TRAY.

D. TELECOMMUNICATION CABLES SHALL BE TERMINATED WITH MODULAR JACKS ON PATCH PANELS IN THE TELECOMMUNICATION ENCLOSURE AND ON MODULAR JACKS AT THE TELECOMMUNICATION OUTLETS.

E. TELECOMMUNICATION CABLE SERVING WIRELESS ACCESS POINTS SHALL BE TERMINATED WITH PLUG TYPE CONNECTORS AT THE LOCATION OF THE WIRELESS ACCESS POINT.

SECURITY AND ACCESS ROUGH-IN NOTES

A. SECURITY AND ACCESS SYSTEM ROUGH-IN REQUIREMENTS:

a. AT SWING DOOR CONTACT LOCATIONS - DRILL 1/2" HOLE IN STRIKE SIDE OF DOOR FRAME AND THROUGH HEADER. PROVIDE 3/4" CONDUIT FROM OPENING IN DOOR FRAME TO JUNCTION BOX ABOVE DOOR AND PROVIDE ONE 3/4"C FROM JUNCTION BOX TO NEAREST PULLBOX WITH A PULL WIRE. REFER TO DETAIL 12/E602.

b. AT ROLL-UP AND BIFOLD DOOR CONTACT LOCATIONS - MOUNT DOOR CONTANCT WITH ARMORED CABLE TO FLOOR NEAR DOOR EDGE. PROVIDE 3/4" CONDUIT FROM RECESSED JUNCTION BOX AND PROVIDE ONE 3/4"C FROM JUNCTION BOX TO NEAREST PULLBOX WITH A PULL WIRE. REFER TO DETAIL 16/E602.

c. AT MOTION DETECTOR LOCATIONS - INSTALL A SINGLE-GANG OUTLET BOX WITH A SINGLE-GANG TRIM-RING IN WALL AT 96" A.F.F., WITH ONE 3/4"C TO NEAREST PULLBOX WITH A PULL WIRE.

d. AT KEYPAD LOCATIONS - INSTALL A SINGLE-GANG OUTLET BOX WITH A SINGLE-GANG TRIM-RING IN WALL AT 48" A.F.F. TO TOP OF BOX, INSTALL ONE 3/4"C TO NEAREST PULLBOX WITH A PULL WIRE.

e. AT VIDEO SURVEILLANCE CAMERA LOCATIONS - PROVIDE A DOUBLE-GANG OUTLET BOX WITH A SINGLE-GANG TRIM RING, HEIGHT AND LOCATION AS INDICATED, INSTALL ONE 1"C TO NEAREST CABLE TRAY OR PULL BOX.

GENERAL NOTES

A. ALL EXPOSED CONDUIT IN ROOMS WITH NO CEILINGS SHALL BE ROUTED PARALLEL OR PERPENDICULAR TO TRUSSES AND GIRDERS. LINES SHOWN AS SPLINES AND ARCS ARE FOR DIAGRAMATIC PURPOSES ONLY.

FOR BID ONLY

Teter, LLP expressly reserves its common law copyright and other property rights in these plans. This document, the ideas and designs incorporated herein, as an instrument of professional service, is not to be used in whole or in part, for any other project without prior written authorization.

MARK	DATE	DESCRIPTION
	11/1/22	DSA BACKCHECK

TETER, LLP
FRESNO HEADQUARTERS
VISALIA | BAKERSFIELD | MODESTO | SAN LUIS OBISPO
ARCHITECTS ENGINEERS CONNECTED

TULARE CAMPUS CTE
COLLEGE OF THE SEQUOIAS
4999 E. BARDSLEY AVE.
TULARE, CA

DRAWING TITLE
SIGNAL PLAN - BUILDING 'F'

PROJECT NO.
21-12032

DRAWING
E420

PLOT DATE: 11/2/2022 9:55:01 AM

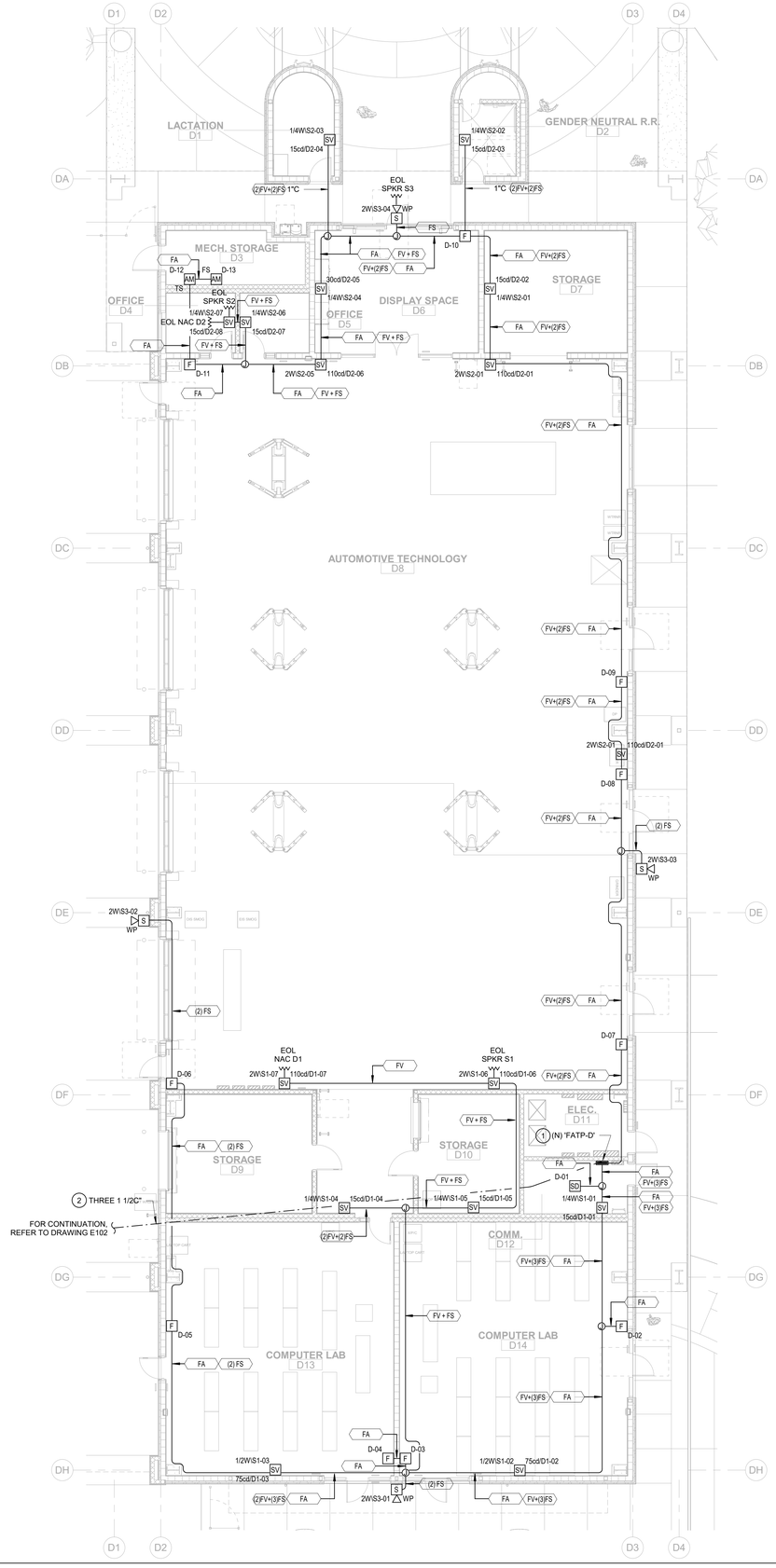

KEYNOTES

1. PROVIDE A RED MECHANICAL LOCK ON DEVICE ON EACH CIRCUIT BREAKER SUPPLYING FIRE ALARM SYSTEM EQUIPMENT AND PROVIDE A RED LABEL THAT READS: "FIRE ALARM / ECS" ADJACENT TO THE CIRCUIT BREAKER.
2. PROVIDE THREE 1 1/2"C WITH ONE TYPE 'FNET' CABLE IN ONE CONDUIT AND ONE TYPE 'FAS' CABLE IN ANOTHER CONDUIT. LEAVE THE THIRD CONDUIT AS A SPARE. REFER TO DRAWINGS E102 AND E710.

FIRE ALARM CONDUIT RUN LEGEND

FA	ONE 3/4"C, WITH ONE TYPE 'FA' CABLE
FS	ONE 3/4"C, WITH ONE TYPE 'FS' CABLE
FV + FS	ONE 3/4"C, WITH ONE TYPE 'FV' CABLE + ONE TYPE 'FS' CABLE
(2) FS	ONE 3/4"C, WITH TWO TYPE 'FS' CABLE
(2)FV+(2)FS	ONE 3/4"C, WITH TWO TYPE 'FV' CABLE + TWO TYPE 'FS' CABLE

NOTE: REFER TO DRAWING 3/E710 FOR CABLE LEGEND.

FIRE ALARM SYSTEM INSTALLATION NOTES

A. THE LOCATION OF AUTOMATIC DETECTORS, MANUAL PULL STATIONS AND OTHER FIRE ALARM EQUIPMENT AND DEVICES, AS SHOWN ON PLAN, ARE FOR REFERENCE ONLY, AND DO NOT CONSTITUTE SHOP DRAWINGS WHICH ARE REQUIRED FOR REVIEW AND APPROVAL.

B. ALL DRAWINGS ARE DIAGRAMMATIC ONLY, AND SHALL NOT BE USED IN DETERMINING ACTUAL CONDUIT ROUTING. THE CONTRACTOR SHALL VERIFY ALL CONDUIT ROUTING CONDITIONS AT THE PROJECT SITE AS CONSTRUCTION PROGRESSES.

C. ALL FIRE ALARM DATA, COMMUNICATIONS AND INITIATING CIRCUITS SHALL BE INSTALLED UTILIZING SOLID COPPER CONDUCTORS WITH OUTER COVERING COLORS PER THE SPECIFICATIONS AND AS SHOWN ON THE DRAWINGS. ALL SMOKE DAMPER AND REMOTE TROUBLE INDICATOR CIRCUITS SHALL BE YELLOW. ALL CIRCUITS SHALL BE INDIVIDUALLY LABELED, BOTH AT THE DEVICE END AND AT THE SIGNAL TERMINAL CABINET AND/OR FIRE ALARM MASTER PANEL TERMINATION POINT.

D. ALL FIRE ALARM CIRCUITS SHALL BE CONTINUOUS FROM DEVICE TO DEVICE. SPLICES ARE NOT ALLOWED UNLESS IN COVERED JUNCTION BOXES ON APPROVED TERMINAL BLOCKS. 'T' TAPPING IS ALLOWED ONLY IN INITIATION LOOPS CONNECTING ADDRESSABLE DEVICES AND ONLY UNDER THESE CONDITIONS. UNDER NO CIRCUMSTANCES SHALL 'T' TAPPING BE PERMITTED BETWEEN CONVENTIONAL DEVICES.

E. SMOKE DETECTORS SHALL BE INSTALLED AWAY FROM AIR SUPPLY GRILLES AT A MINIMUM DISTANCE OF 3' PER NFPA 72 29.8.3.4 OR GREATER AS RECOMMENDED BY THE MANUFACTURER.

F. CONTRACTOR SHALL SYNCHRONIZE TWO OR MORE STROBES IN ONE ROOM AND TWO OR MORE SPEAKERS WITHIN HEARING OF EACH OTHER.

G. THE FIRE ALARM SYSTEM SHALL CONFORM TO THE 2019 CALIFORNIA ELECTRICAL CODE (CEC) ARTICLE 760 AND THE 2019 CALIFORNIA FIRE CODE (CFC) § 105.7 & § 907, AND CALIFORNIA BUILDING CODE (CBC) 907.

GENERAL NOTES

A. CONDUIT AND CABLES SHALL BE CONCEALED WITHIN WALLS AND ABOVE CEILINGS.

B. ALL EXPOSED CONDUIT IN ROOMS WITH NO CEILINGS SHALL BE ROUTED PARALLEL OR PERPENDICULAR TO TRUSSES AND GIRDERS. LINES SHOWN AS SPLINES AND ARCS ARE FOR DIAGRAMATIC PURPOSES ONLY.

NORTH

FIRE ALARM PLAN - BUILDING 'D'

1/8" = 1'-0" | 1

FOR BID ONLY

Teter, LLP expressly reserves its common law copyright and other property rights in these plans. This document, the ideas and designs incorporated herein, as an instrument of professional service, is not to be used in whole or in part, for any other project without prior written authorization.

MARK	DATE	DESCRIPTION
	11/1/22	DSA BACKCHECK

TETER, LLP
ARCHITECTS ENGINEERS CONNECTED
FRESNO HEADQUARTERS
VISALIA | BAKERSFIELD | MODESTO | SAN LUIS OBISPO

TULARE CAMPUS CTE
COLLEGE OF THE SEQUOIAS
4999 E. BARDSLEY AVE.
TULARE, CA

DRAWING TITLE
FIRE ALARM PLAN - BUILDING 'D'

PROJECT NO.
21-12032

DRAWING
E500

\\tet-file1\Users\corey.stone\Documents\12032-E-COS Tulare CTE_corey.stone.rvt

PLOT DATE: 11/2/2022 9:55:06 AM

\\tet-file1\Users\corey.stone\Documents\12032-E-COS Tulare CTE_corey.stone.rvt

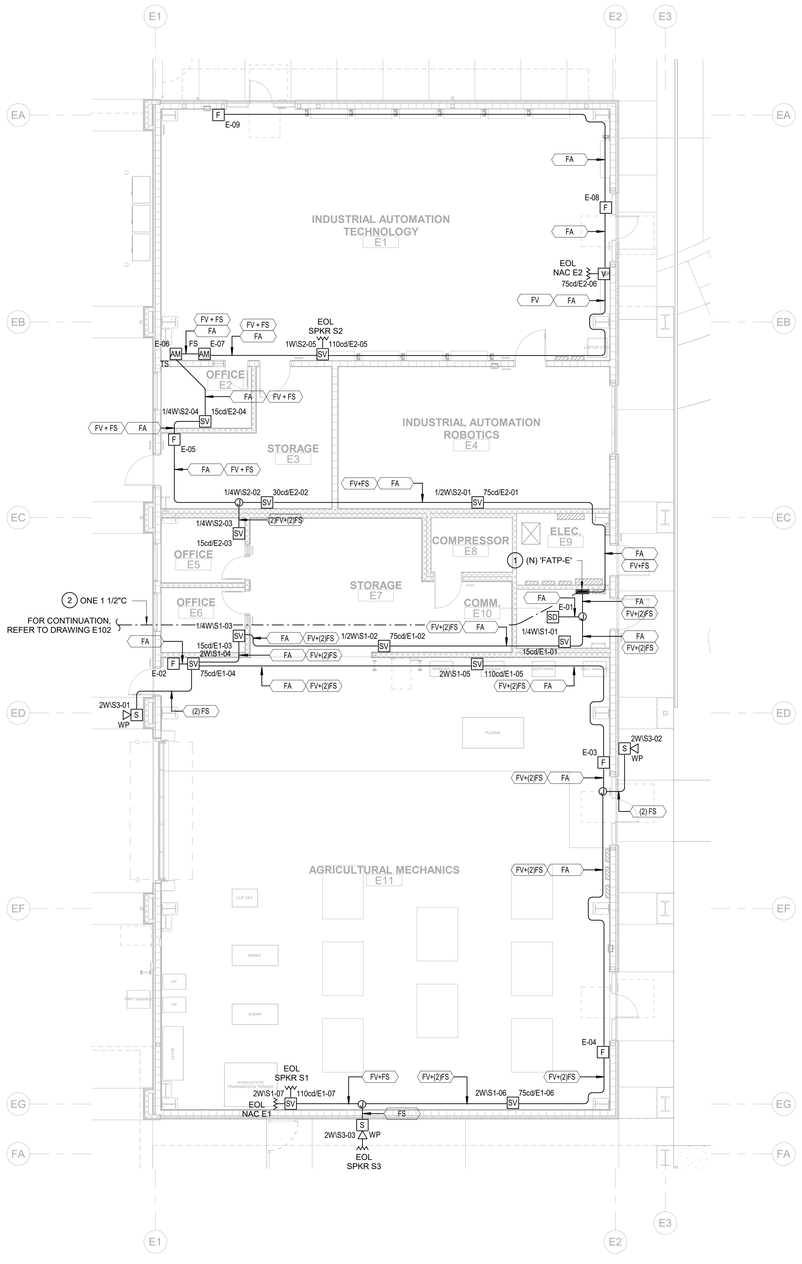

KEYNOTES

1. PROVIDE A CIRCUIT BREAKER LOCKING DEVICE ON EACH CIRCUIT BREAKER SUPPLYING FIRE ALARM SYSTEM EQUIPMENT AND PROVIDE A RED LABEL THAT READS: "FIRE ALARM / ECS" ADJACENT TO THE CIRCUIT BREAKER.
2. PROVIDE ONE 1 1/2"C WITH TWO TYPE 'FNET' CABLES. REFER TO DRAWINGS E102 AND E710.

FIRE ALARM CONDUIT RUN LEGEND

FA	ONE 3/4"C, WITH ONE TYPE 'FA' CABLE
FS	ONE 3/4"C, WITH ONE TYPE 'FS' CABLE
FV + FS	ONE 3/4"C, WITH ONE TYPE 'FV' CABLE + ONE TYPE 'FS' CABLE
(2) FS	ONE 3/4"C, WITH TWO TYPE 'FS' CABLE
(2)FV+(2)FS	ONE 3/4"C, WITH TWO TYPE 'FV' CABLE + TWO TYPE 'FS' CABLE

NOTE: REFER TO DRAWING 5/E710 FOR CABLE LEGEND.

FIRE ALARM SYSTEM INSTALLATION NOTES

A. THE LOCATION OF AUTOMATIC DETECTORS, MANUAL PULL STATIONS AND OTHER FIRE ALARM EQUIPMENT AND DEVICES, AS SHOWN ON PLAN, ARE FOR REFERENCE ONLY, AND DO NOT CONSTITUTE SHOP DRAWINGS WHICH ARE REQUIRED FOR REVIEW AND APPROVAL.

B. ALL DRAWINGS ARE DIAGRAMMATIC ONLY, AND SHALL NOT BE USED IN DETERMINING ACTUAL CONDUIT ROUTING. THE CONTRACTOR SHALL VERIFY ALL CONDUIT ROUTING CONDITIONS AT THE PROJECT SITE AS CONSTRUCTION PROGRESSES.

C. ALL FIRE ALARM DATA, COMMUNICATIONS AND INITIATING CIRCUITS SHALL BE INSTALLED UTILIZING SOLID COPPER CONDUCTORS WITH OUTER COVERING COLORS PER THE SPECIFICATIONS AND AS SHOWN ON THE DRAWINGS. ALL SMOKE DAMPER AND REMOTE TROUBLE INDICATOR CIRCUITS SHALL BE YELLOW. ALL CIRCUITS SHALL BE INDIVIDUALLY LABELED, BOTH AT THE DEVICE END AND AT THE SIGNAL TERMINAL CABINET AND/OR FIRE ALARM MASTER PANEL TERMINATION POINT.

D. ALL FIRE ALARM CIRCUITS SHALL BE CONTINUOUS FROM DEVICE TO DEVICE. SPLICES ARE NOT ALLOWED UNLESS IN COVERED JUNCTION BOXES ON APPROVED TERMINAL BLOCKS. 'T' TAPPING IS ALLOWED ONLY IN INITIATION LOOPS CONNECTING ADDRESSABLE DEVICES AND ONLY UNDER THESE CONDITIONS. UNDER NO CIRCUMSTANCES SHALL 'T' TAPPING BE PERMITTED BETWEEN CONVENTIONAL DEVICES.

E. SMOKE DETECTORS SHALL BE INSTALLED AWAY FROM AIR SUPPLY GRILLES AT A MINIMUM DISTANCE OF 3' PER NFPA 72 29.8.3.4 OR GREATER AS RECOMMENDED BY THE MANUFACTURER.

F. CONTRACTOR SHALL SYNCHRONIZE TWO OR MORE STROBES IN ONE ROOM AND TWO OR MORE SPEAKERS WITHIN HEARING OF EACH OTHER.

G. THE FIRE ALARM SYSTEM SHALL CONFORM TO THE 2019 CALIFORNIA ELECTRICAL CODE (CEC) ARTICLE 760 AND THE 2019 CALIFORNIA FIRE CODE (CFC) § 105.7 & § 907, AND CALIFORNIA BUILDING CODE (CBC) 907.

GENERAL NOTES

A. CONDUIT AND CABLES SHALL BE CONCEALED WITHIN WALLS AND ABOVE CEILINGS.

B. ALL EXPOSED CONDUIT IN ROOMS WITH NO CEILINGS SHALL BE ROUTED PARALLEL OR PERPENDICULAR TO TRUSSES AND GIRDERS. LINES SHOWN AS SPLINES AND ARCS ARE FOR DIAGRAMATIC PURPOSES ONLY.

NORTH

FIRE ALARM PLAN - BUILDING 'E'

1/8" = 1'-0" | 1

FOR BID ONLY

Teter, LLP expressly reserves its common law copyright and other property rights in these plans. This document, the ideas and designs incorporated herein, as an instrument of professional service, is not to be used in whole or part, for any other project without prior written authorization.

MARK	DATE	DESCRIPTION
	11/1/22	DSA BACKCHECK

COREY M. STONE No. E12363 Exp. 8-31-23 ELECTRICAL REGISTERED PROFESSIONAL ENGINEER 8/22/2022

TETER, LLP
FRESNO HEADQUARTERS
VISALIA I BAKERSFIELD I MODESTO I SAN LUIS OBISPO
ARCHITECTS ENGINEERS CONNECTED

TETER

TULARE CAMPUS CTE
COLLEGE OF THE SEQUOIAS
4999 E. BARDSLEY AVE.
TULARE, CA

DRAWING TITLE
FIRE ALARM PLAN - BUILDING 'E'

PROJECT NO.
21-12032

DRAWING
E510

PLOT DATE: 11/2/2022 9:55:10 AM

\\tet-file1\Users\corey.stone\Documents\12032-E-COS Tulare CTE_corey.stone.rvt

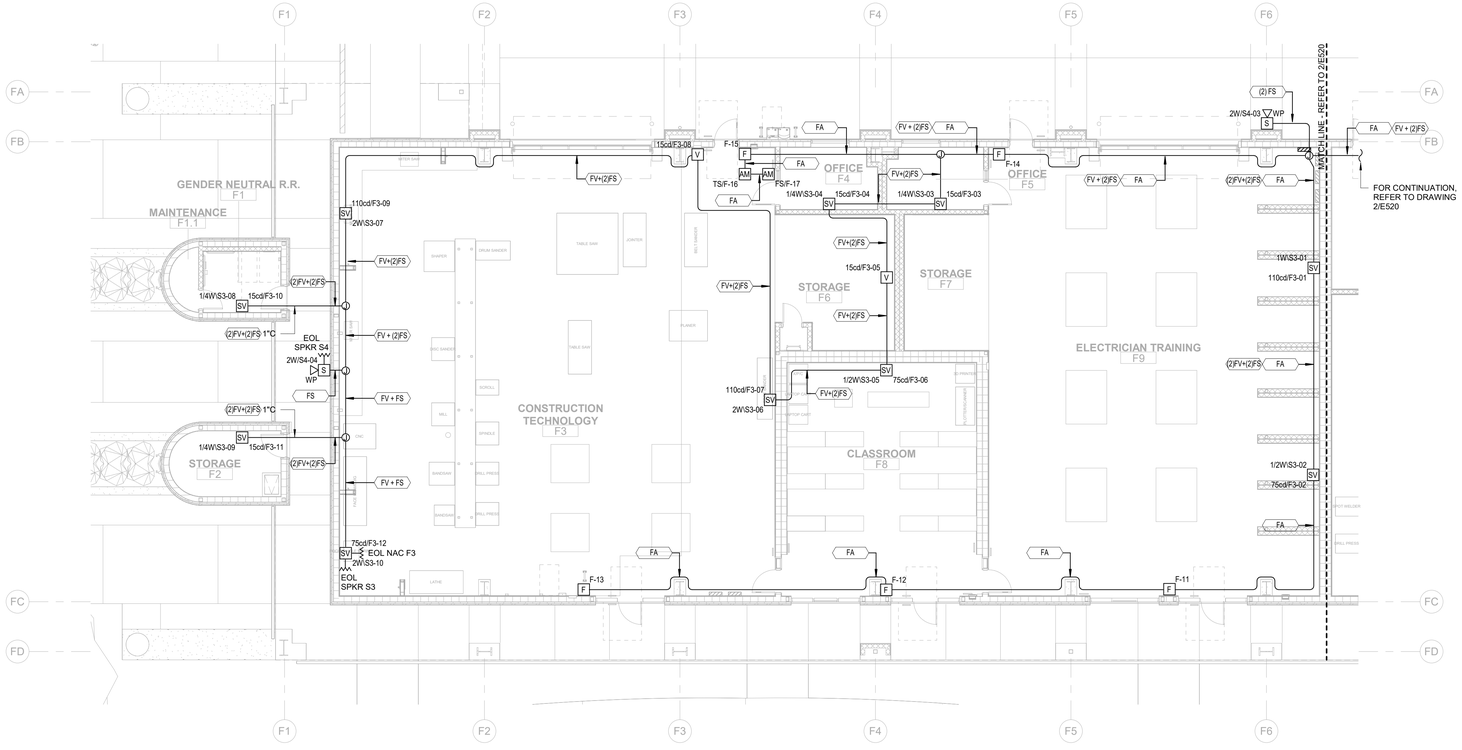

NORTH

FIRE ALARM PLAN - BUILDING 'F' (WEST)

1/8" = 1'-0" | 1

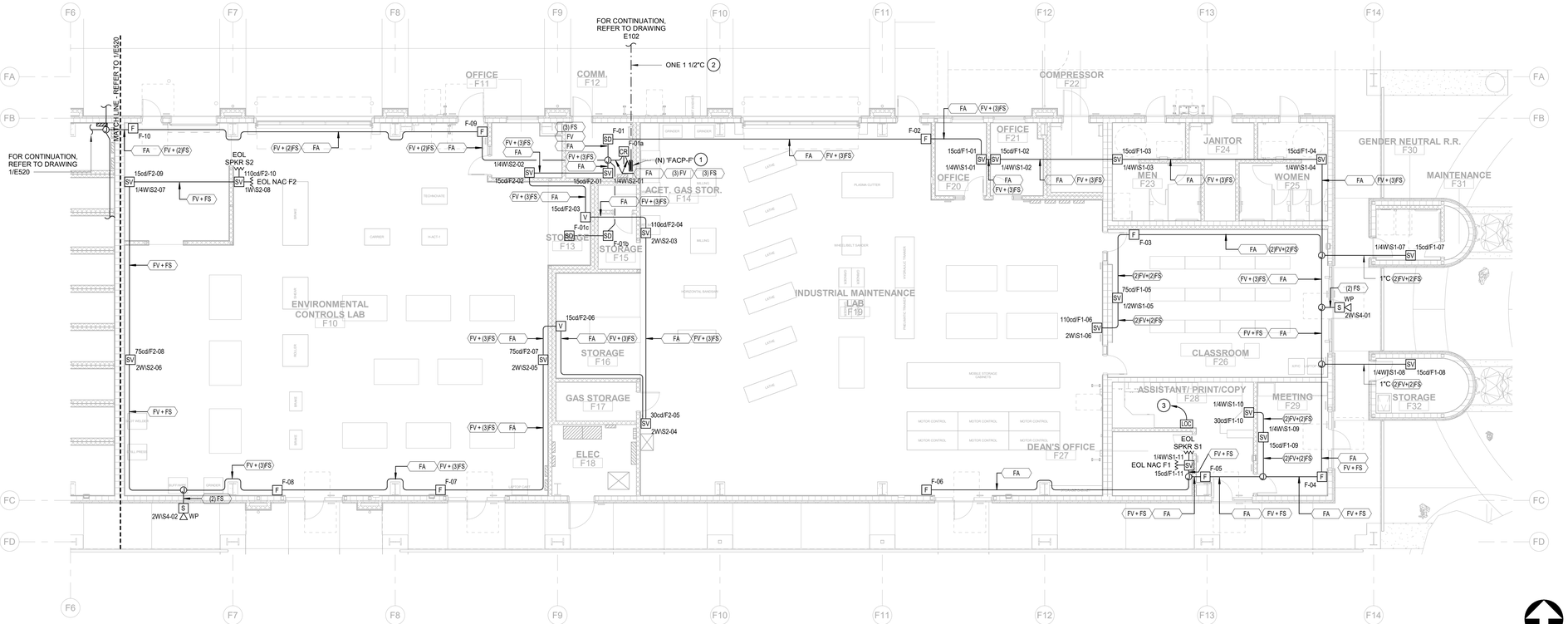

NORTH

FIRE ALARM PLAN - BUILDING 'F' (EAST)

1/8" = 1'-0" | 2

KEYNOTES

1. PROVIDE A CIRCUIT BREAKER LOCKING DEVICE ON EACH CIRCUIT BREAKER SUPPLYING FIRE ALARM SYSTEM EQUIPMENT AND PROVIDE A RED LABEL THAT READS: "FIRE ALARM / ECS" ADJACENT TO THE CIRCUIT BREAKER.
2. PROVIDE 1 1/2"C WITH ONE TYPE 'FNET' CABLE, REFER TO DRAWINGS E102 AND E710.
3. PROVIDE ONE 3/4"C TO 'FACP-F' WITH ONE TYPE 'FNET' CABLE, ONE TYPE 'FA' CABLE AND ONE TYPE 'FV' CABLE TO FACILITATE CONNECTION TO THE 'LOC'.

FIRE ALARM CONDUIT RUN LEGEND

- FA — ONE 3/4"C, WITH ONE TYPE 'FA' CABLE
- FS — ONE 3/4"C, WITH ONE TYPE 'FS' CABLE
- FV + FS — ONE 3/4"C, WITH ONE TYPE 'FV' CABLE + ONE TYPE 'FS' CABLE
- (2) FS — ONE 3/4"C, WITH TWO TYPE 'FS' CABLE
- (2)FV+(2)FS — ONE 3/4"C, WITH TWO TYPE 'FV' CABLE + TWO TYPE 'FS' CABLE

NOTE: REFER TO DRAWING 2/E800 FOR CABLE LEGEND.

FIRE ALARM SYSTEM INSTALLATION NOTES

A. THE LOCATION OF AUTOMATIC DETECTORS, MANUAL PULL STATIONS AND OTHER FIRE ALARM EQUIPMENT AND DEVICES, AS SHOWN ON PLAN, ARE FOR REFERENCE ONLY, AND DO NOT CONSTITUTE SHOP DRAWINGS WHICH ARE REQUIRED FOR REVIEW AND APPROVAL.

B. ALL DRAWINGS ARE DIAGRAMMATIC ONLY, AND SHALL NOT BE USED IN DETERMINING ACTUAL CONDUIT ROUTING. THE CONTRACTOR SHALL VERIFY ALL CONDUIT ROUTING CONDITIONS AT THE PROJECT SITE AS CONSTRUCTION PROGRESSES.

C. ALL FIRE ALARM DATA, COMMUNICATIONS AND INITIATING CIRCUITS SHALL BE INSTALLED UTILIZING SOLID COPPER CONDUCTORS WITH OUTER COVERING COLORS PER THE SPECIFICATIONS AND AS SHOWN ON THE DRAWINGS. ALL SMOKE DAMPER AND REMOTE TROUBLE INDICATOR CIRCUITS SHALL BE YELLOW. ALL CIRCUITS SHALL BE INDIVIDUALLY LABELED, BOTH AT THE DEVICE END AND AT THE SIGNAL TERMINAL CABINET AND/OR FIRE ALARM MASTER PANEL TERMINATION POINT.

D. ALL FIRE ALARM CIRCUITS SHALL BE CONTINUOUS FROM DEVICE TO DEVICE. SPLICES ARE NOT ALLOWED UNLESS IN COVERED JUNCTION BOXES ON APPROVED TERMINAL BLOCKS. 'T' TAPPING IS ALLOWED ONLY IN INITIATION LOOPS CONNECTING ADDRESSABLE DEVICES AND ONLY UNDER THESE CONDITIONS. UNDER NO CIRCUMSTANCES SHALL 'T' TAPPING BE PERMITTED BETWEEN CONVENTIONAL DEVICES.

E. SMOKE DETECTORS SHALL BE INSTALLED AWAY FROM AIR SUPPLY GRILLES AT A MINIMUM DISTANCE OF 3' PER NFPA 72 29.8.3.4 OR GREATER AS RECOMMENDED BY THE MANUFACTURER.

F. CONTRACTOR SHALL SYNCHRONIZE TWO OR MORE STROBES IN ONE ROOM AND TWO OR MORE SPEAKERS WITHIN HEARING OF EACH OTHER.

G. THE FIRE ALARM SYSTEM SHALL CONFORM TO THE 2019 CALIFORNIA ELECTRICAL CODE (CEC) ARTICLE 760 AND THE 2019 CALIFORNIA FIRE CODE (CFC) § 105.7 & § 907, AND CALIFORNIA BUILDING CODE (CBC) 907.

GENERAL NOTES

A. CONDUIT AND CABLES SHALL BE CONCEALED WITHIN WALLS AND ABOVE CEILINGS.

B. ALL EXPOSED CONDUIT IN ROOMS WITH NO CEILINGS SHALL BE ROUTED PARALLEL OR PERPENDICULAR TO TRUSSES AND GIRDERS. LINES SHOWN AS SPLINES AND ARCS ARE FOR DIAGRAMATIC PURPOSES ONLY.

FOR BID ONLY

Teter, LLP expressly reserves its common law copyright and other property rights in these plans. This document, the ideas and designs incorporated herein, as an instrument of professional service, is not to be used in whole or in part, for any other project without prior written authorization.

MARK	DATE	DESCRIPTION
	11/1/22	DSA BACKCHECK

TETER, LLP
FRESNO HEADQUARTERS
VISALIA | BAKERSFIELD | MODESTO | SAN LUIS OBISPO
ARCHITECTS ENGINEERS CONNECTED

TULARE CAMPUS CTE
COLLEGE OF THE SEQUOIAS
4999 E. BARDSLEY AVE.
TULARE, CA

DRAWING TITLE
FIRE ALARM PLAN - BUILDING 'F'

PROJECT NO.
21-12032

DRAWING
E520

PLOT DATE: 11/2/2022 9:55:16 AM

\\tet-file1\Users\corey.stone\Documents\12032-E-COS Tulare CTE_corey.stone.rvt

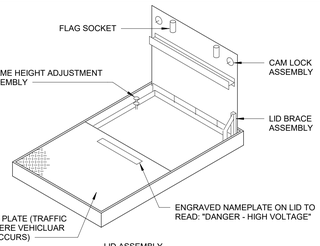

LID ASSEMBLY

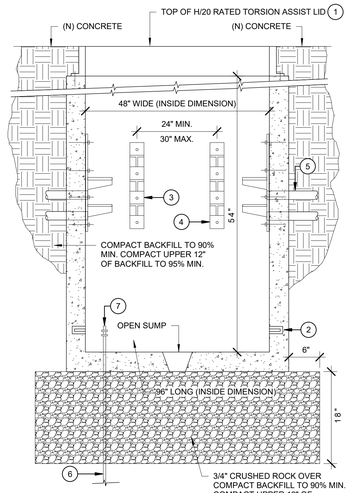

NOTES:

LID AND VAULT SHALL BE H/20 LOADING RATED. CONDUCTORS SHALL BE TIED TO THE CABLE RACKS WITH PLACTIC TIES. BOND ANY EXPOSED METAL PARTS TOGETHER AND TO GROUND ROD WITH #4 AWG CU WIRE.

1. TRAFFIC RATED LID
2. THREADED INSTERT FOR GALVANIZED STEEL PULLING EYE BOLT (TYP)
3. EPOXY ADHIESIVE ANCHOR, 1/2", WITH LOCK WASHER AND NUT, 4-1/4" MIN. EMBEDMENT (TYP.)
4. CABLE RACK, NON-METALLIC (TYP. ALONG ALL FOUR WALLS)
5. CONDUIT (TYP.)
6. GROUND ROD, 3/4" DIA. 10', COPPER CLAD
7. U-BOLT (TYP.)

U.G. PULLBOX - MEDIUM VOLTAGE N.T.S. 28

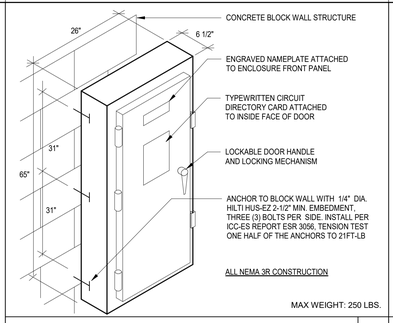

ALL NEMA 3R CONSTRUCTION

MAX WEIGHT: 250 LBS.

CMU SURFACE PANEL MOUNTING N.T.S. 21

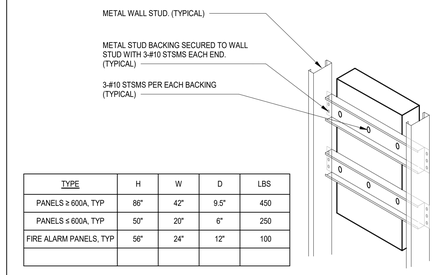

TYPE	H	W	D	LBS
PANELS ≥ 600A, TYP	86"	42"	9.5"	450
PANELS ≤ 600A, TYP	50"	20"	6"	250
FIRE ALARM PANELS, TYP	56"	24"	12"	100

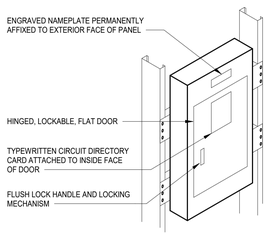

METAL STUD SURFACE PANEL MOUNTING N.T.S. 11

	DIMENSION 'a'	DIMENSION 'b'	ENGRAVING	LID TYPE
F30	24"	13"	FIRE ALARM	STEEL
S30	24"	13"	SIGNAL	STEEL
S36	30"	17"	SIGNAL	STEEL
S48	48"	30"	SIGNAL	STEEL

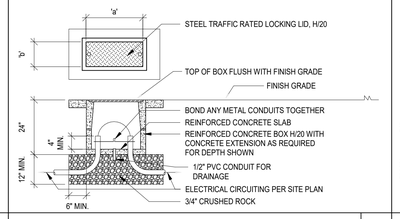

U.G. PULLBOX (H20 TRAFFIC RATED) N.T.S. 6

	DIMENSION 'a'	DIMENSION 'b'	ENGRAVING	LID TYPE
EV16	22"	11"	ELECTRIC	STEEL
P30	24"	13"	POWER	STEEL
P36	30"	17"	POWER	STEEL
L16	22"	11"	LIGHTING	STEEL
L30	24"	13"	LIGHTING	STEEL
L36	30"	17"	LIGHTING	STEEL

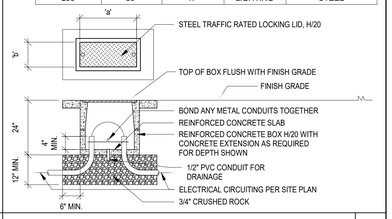

U.G. PULLBOX (H20 TRAFFIC RATED) N.T.S. 1

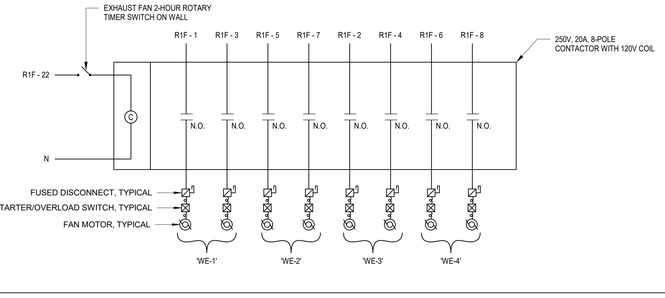

WELD EXHAUST FAN CONTROL DETAIL N.T.S. 17

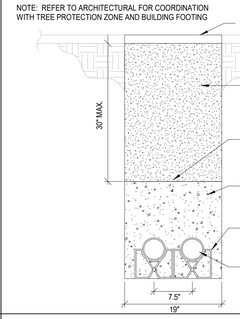

MEDIUM VOLTAGE CONDUIT TRENCH DETAIL N.T.S. 12

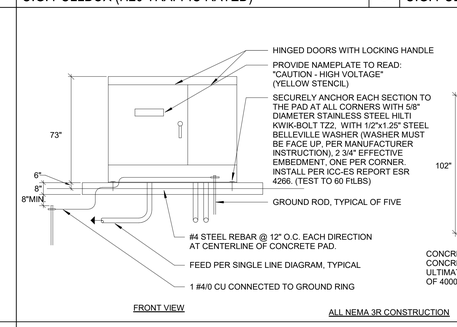

FRONT VIEW

ALL NEMA 3R CONSTRUCTION

PLAN VIEW

MEDIUM VOLTAGE TRANSFORMER PAD, ANCHORAGE AND GROUNDING FACILITIES N.T.S. 2

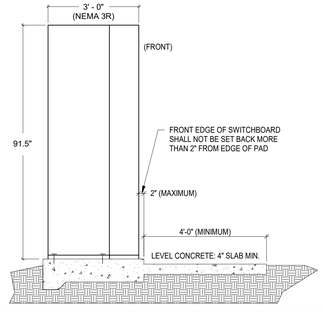

MAIN SWITCHBOARD 'MSB-5' ELEVATION N.T.S. 13

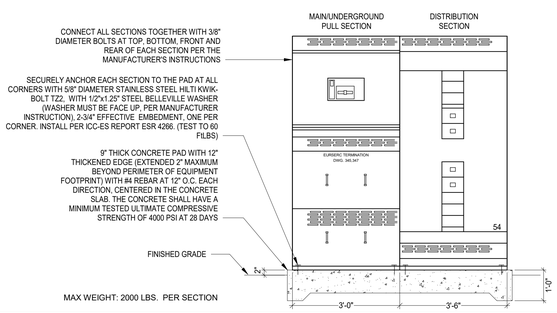

MAX WEIGHT: 2000 LBS. PER SECTION

FURNISH AND INSTALL ALL OF THE FOLLOWING GROUNDING ELECTRODES WITHIN THE CONCRETE SERVICE ENTRANCE EQUIPMENT PAD:

1. A CONCRETE-ENCASED ELECTRODE CONSISTING OF AT LEAST 20-FT OF BARE #3/0 COPPER CONDUCTOR AND BONDED TO THE SERVICE ENTRANCE EQUIPMENT GROUNDING BUS.
2. A 3/4"-DIAMETER x 10-FT LENGTH, COPPER-CLAD STEEL GROUNDING ROD.
3. BOND STRUCTURAL TO THE GROUNDING ROD
4. CONNECTION TO U.G. WATER PIPE

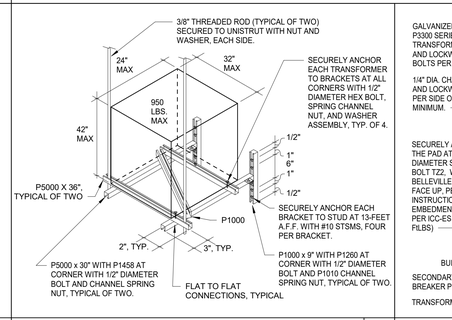

TRANSFORMER WALL MOUNT N.T.S. 8

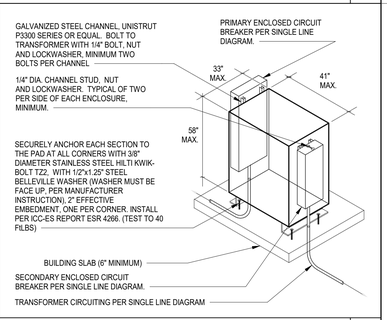

PAD MOUNTED TRANSFORMER N.T.S. 3

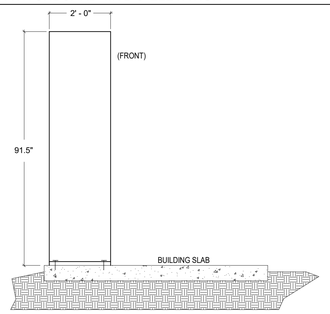

MAIN DISTRIBUTION PANEL 'DPF' ELEVATION N.T.S. 14

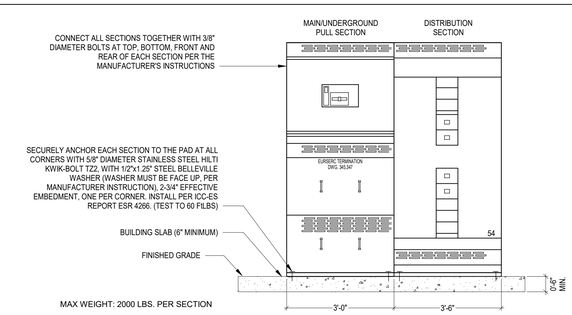

MAX WEIGHT: 2000 LBS. PER SECTION

FURNISH AND INSTALL ALL OF THE FOLLOWING GROUNDING ELECTRODES WITHIN THE CONCRETE SERVICE ENTRANCE EQUIPMENT PAD:

1. A CONCRETE-ENCASED ELECTRODE CONSISTING OF AT LEAST 20-FT OF BARE #3/0 COPPER CONDUCTOR AND BONDED TO THE SERVICE ENTRANCE EQUIPMENT GROUNDING BUS.
2. A 3/4"-DIAMETER x 10-FT LENGTH, COPPER-CLAD STEEL GROUNDING ROD.
3. BOND STRUCTURAL TO THE GROUNDING ROD
4. CONNECTION TO U.G. WATER PIPE

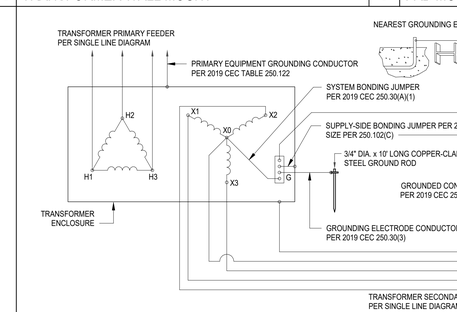

480V:120/208V TRANSFORMER GROUNDING ELECTRODE SYSTEM N.T.S. 4

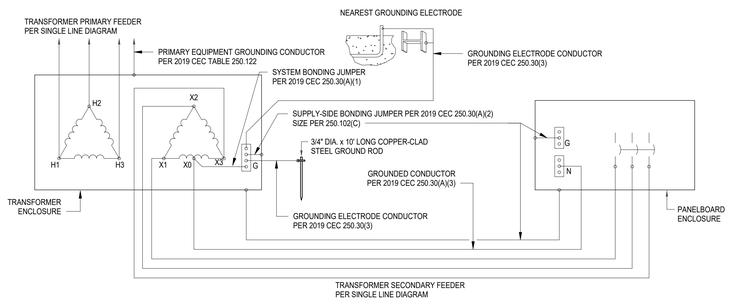

480V:120/240V (DELTA CONNECTED) TRANSFORMER GROUNDING ELECTRODE SYSTEM N.T.S. 25

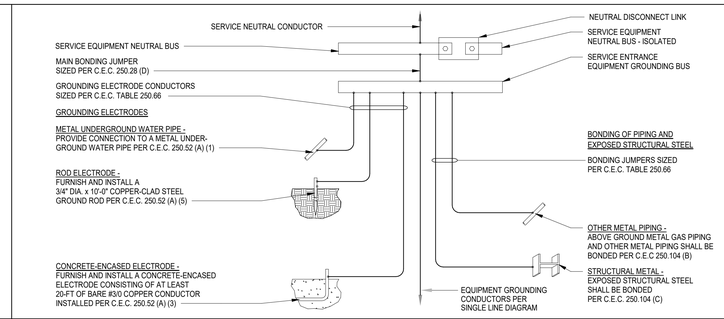

GROUNDING ELECTRODE SYSTEM AT MAIN SWITCHBOARD 'MSB-5' N.T.S. 15

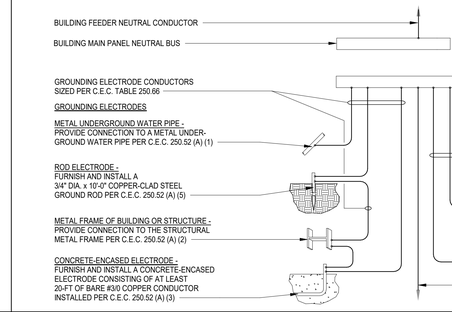

REMOTE BUILDING GROUNDING ELECTRODE SYSTEM N.T.S. 5

PLOT DATE: 11/2/2022 9:55:17 AM

FOR BID ONLY

Teter, LLP expressly reserves its common law copyright and other property rights in these plans. This document, the ideas and designs incorporated herein, as an instrument of professional service, is not to be used in whole or in part, for any other project without prior written authorization.

MARK	DATE	DESCRIPTION
	11/1/22	DSA BACKCHECK

TETER, LLP
FRESNO HEADQUARTERS
VISALIA | BAKERSFIELD | MODESTO | SAN LUIS OBISPO
ARCHITECTS ENGINEERS CONNECTED

TULARE CAMPUS CTE
COLLEGE OF THE SEQUOIAS
4999 E. BARDSLEY AVE.
TULARE, CA

DRAWING TITLE
ELECTRICAL DETAILS - POWER

PROJECT NO.
21-12032

DRAWING
E600

\\tet-file1\Users\corey.stone\Documents\12032-E-COS Tulare CTE_corey.stone.rvt

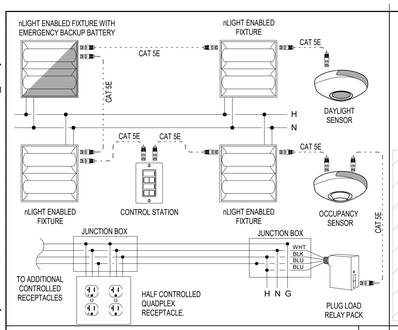

LIGHTING CONTROLS - nLIGHT ENABLED

N.T.S. 26

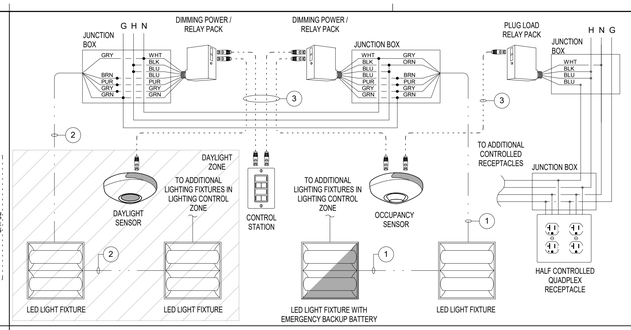

LIGHTING CONTROLS: 0-10V DIMMING

N.T.S. 16

1. TYPE MC-PCS MC LUMINARY CABLE CONSISTING OF THE FOLLOWING CIRCUIT CONDUCTORS:
   1. CONTROLLED HOT - 18\12 CU THHN (BROWN)
   2. UNSWITCHED HOT - 18\12 CU THHN (ORANGE)
   3. NEUTRAL - 18\12 CU THHN (GREY)
   4. EQUIPMENT GROUNDING - 18\12 CU THHN (GREEN)
   5. 0-10VDC CONTROL: PVC JACKET CONTAINING 2#16 CU TFN (PURPLE AND GRAY)
2. TYPE MC-PCS MC LUMINARY CABLE CONSISTING OF THE FOLLOWING CIRCUIT CONDUCTORS:
   1. CONTROLLED HOT(BROWN)
   2. NEUTRAL - 18\12 CU THHN (GREY)
   3. EQUIPMENT GROUNDING - 18\12 CU THHN (GREEN)
   4. 0-10VDC CONTROL: PVC JACKET CONTAINING 2#16 CU TFN (PURPLE AND GRAY)
3. CATEGORY 5E CABLE (GREEN).

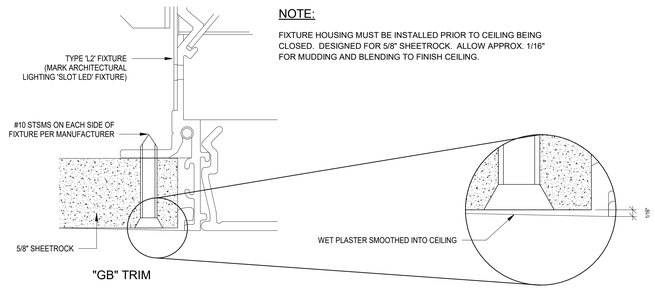

NOTE:

FIXTURE HOUSING MUST BE INSTALLED PRIOR TO CEILING BEING CLOSED. DESIGNED FOR 5/8" SHEETROCK. ALLOW APPROX. 1/16" FOR MUDDING AND BLENDING TO FINISH CEILING.

RECESSED LINEAR FIXTURE

N.T.S. 6

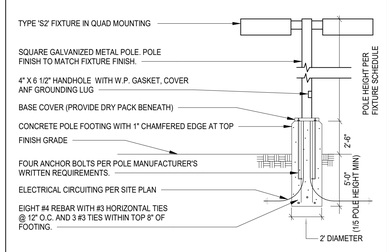

MULTI-HEAD POLE FIXTURE MOUNTING

N.T.S. 1

1. CATEGORY 5E CABLE (GREEN).

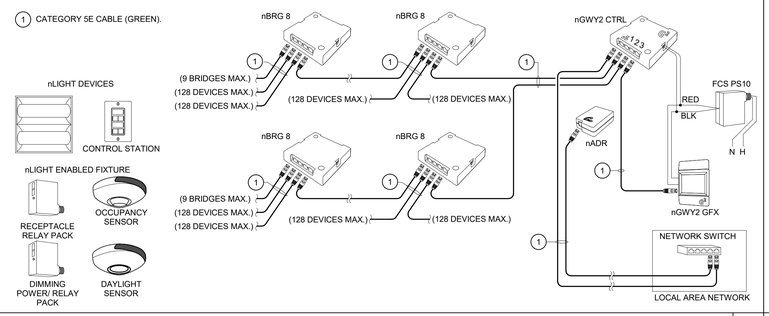

ADR CONTROLS

N.T.S. 22

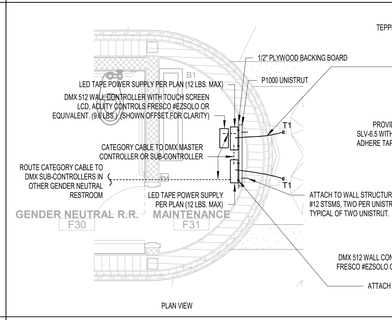

LED TAPE LIGHT MOUNTING

N.T.S. 7

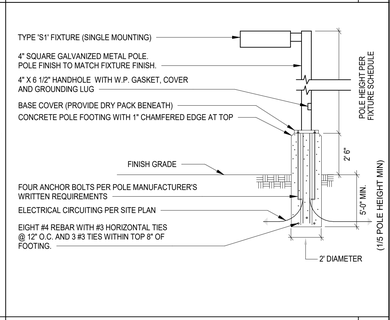

SINGLE HEAD POLE FIXTURE MOUNTING

N.T.S. 2

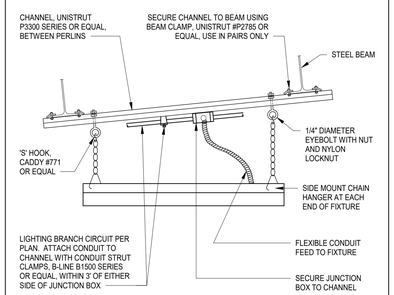

NOTE:
PENDANT LIGHTS SHALL BE ALLOWED TO SWING 45° IN ANY DIRECTION WITHOUT CONTACTING AN OBSTRUCTION. IF AN OBSTRUCTION IS LOCATED WITHIN THE 45° SWING OF THE FIXTURE, THE CONTRACTOR SHALL PROVIDE A STATE APPROVED RESTRAINT TO KEEP FIXTURE FROM SWINGING INTO THE OBSTRUCTION.

PENDANT MOUNTING

N.T.S. 18

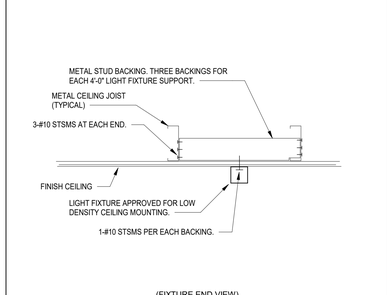

RECESSED LINEAR FIXTURE MOUNTING

N.T.S. 13

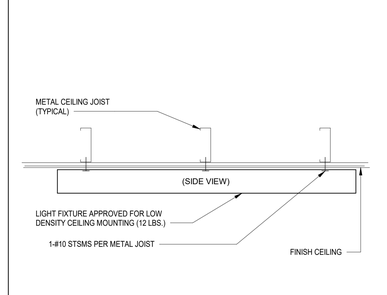

SURFACE MOUNTING FIXTURE

N.T.S. 8

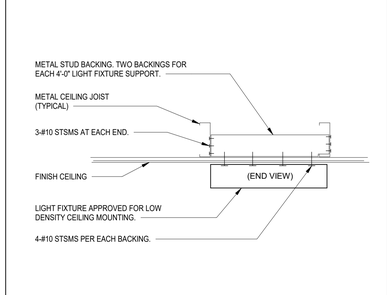

IN-GROUND LIGHTING

N.T.S. 3

CHAIN MOUNTED FIXTURE

N.T.S. 24

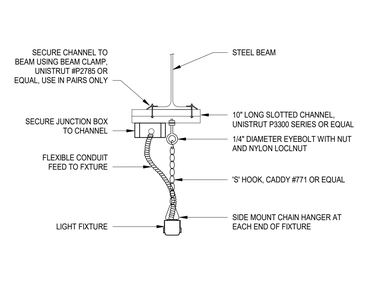

CHAIN MOUNTED FIXTURE TO STEEL BEAM

N.T.S. 19

SURFACE FIXTURE MOUNTING

N.T.S. 14

SURFACE FIXTURE MOUNTING

N.T.S. 9

SURFACE FIXTURE MOUNTING

N.T.S. 4

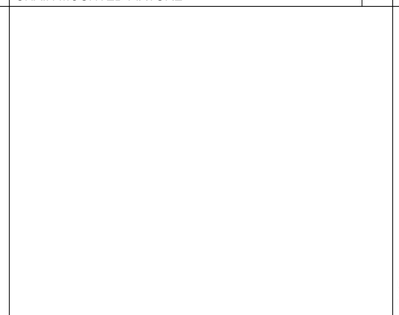

ROD SIZE	MAX STRUT STIFFENER LENGTH	MAX UCC SPACING
3/8"	156"	28"
1/2"	156"	38"
5/8"	156"	48"
3/4"	156"	57"

NOTE: SEE OPM-0043-13 MASON WEST SEISMIC RESTRAINT MANUAL GUIDELINES FOR MECHANICAL SYSTEMS.

ROD STIFFENER DETAIL

N.T.S. 20

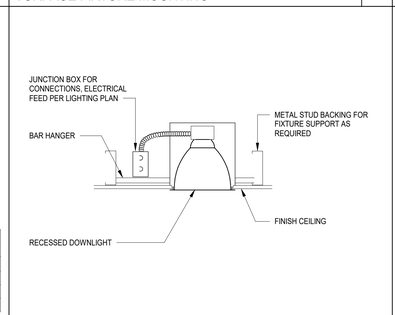

RECESSED DOWNLIGHT

N.T.S. 15

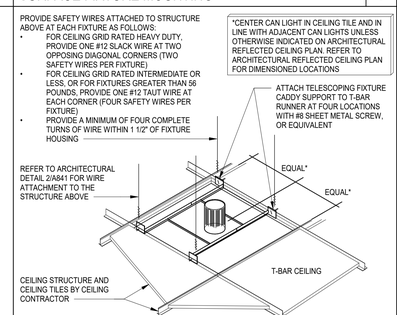

RECESSED CANLIGHT - T-BAR CEILING

N.T.S. 10

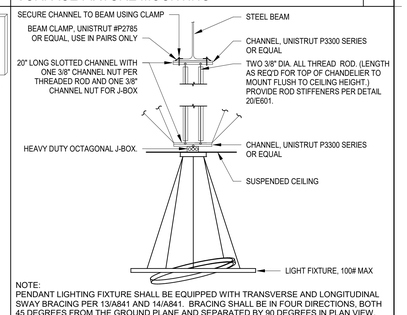

NOTE:
PENDANT LIGHTING FIXTURE SHALL BE EQUIPPED WITH TRANSVERSE AND LONGITUDINAL SWAY BRACING PER 13/A841 AND 14/A841. BRACING SHALL BE IN FOUR DIRECTIONS, BOTH 45 DEGREES FROM THE GROUND PLANE AND SEPARATED BY 90 DEGREES IN PLAN VIEW.

CHANDELIER MOUNTING DETAIL

N.T.S. 5

PLOT DATE: 11/2/2022 9:55:21 AM

FOR BID ONLY

Teter, LLP expressly reserves its common law copyright and other property rights in these plans. This document, the ideas and designs incorporated herein, as an instrument of professional service, is not to be used in whole or in part, for any other project without prior written authorization.

MARK	DATE	DESCRIPTION
	11/1/22	DSA BACKCHECK

REGISTERED PROFESSIONAL ENGINEER COREY M. STONE No. 072953 ELECTRICAL STATE OF CALIFORNIA

TETER, LLP
FRESNO HEADQUARTERS
VISALIA | BAKERSFIELD | MODESTO | SAN LUIS OBISPO
ARCHITECTS ENGINEERS CONNECTED

TULARE CAMPUS CTE
COLLEGE OF THE SEQUOIAS
4999 E. BARDSLEY AVE.
TULARE, CA

DRAWING TITLE
ELECTRICAL DETAILS - LIGHTING

PROJECT NO.
21-12032

DRAWING
E601

\\tet-file1\Users\corey.stone\Documents\12032-E-COS Tulare CTE_corey.stone.rvt

PATHWAY SCHEDULE

DESIGNATION	DESCRIPTION	APPROXIMATE OUTSIDE DIMENSION	APPROXIMATE INSIDE DIMENSION	CAT6 CABLE FILL CAPACITY (CABLE FILL BASED ON CABLE OD = 0.225)	CAT6A CABLE FILL CAPACITY (CABLE FILL BASED ON CABLE OD = 0.3)
3/4" C ◆	CONDUIT		.75" DIA.	5	3
1" C			1" DIA.	8	4
1-1/4" C			1.25" DIA.	15	8
1-1/2" C			1.5" DIA.	20	11
2" C			2" DIA.	33	18
2-1/2" C			2.5" DIA.	48	27
3" C			3" DIA.	74	41
4" C			4" DIA.	128	72
CT-A	CABLE TRAY	5" X 6"	4" X 6"	301	169
CT-B		5" x 9"	4" X 9"	452	254
CT-C		5" x 12"	4" X 12"	603	339
CT-D		5" x 18"	4" X 18"	905	509
CD-E		5" x 24"	4" X 24"	1207	679
1.3125" J	J-HOOK			23	12
2" J				39	22
4" J				155	87

◆ 3/4" CONDUIT SHALL ONLY BE ALLOWED AS SPECIFICALLY NOTED ON DRAWINGS.

** REDUCE CAPACITY BY 50% FOR THE FOLLOWING CONDITIONS:
- WHEN CONNECTORS ARE MOUNTED WITHIN THE RACEWAY
- WHEN NON-RADIUS FITTINGS RESTRICT CROSS-SECTIONAL AREA

CABLE PATHWAY SCHEDULE N.T.S. 22

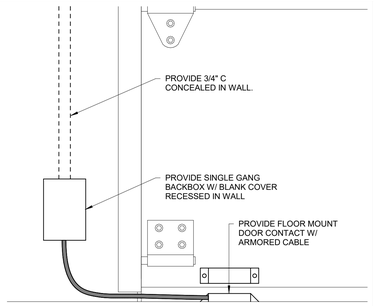

DOOR CONTACT - ROLLING DOOR N.T.S. 16

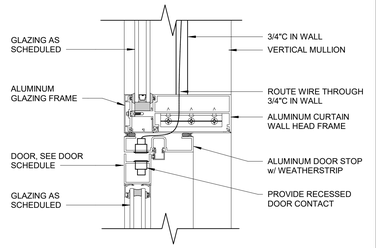

CURTAIN WALL DOOR HEAD AT TRANSOM

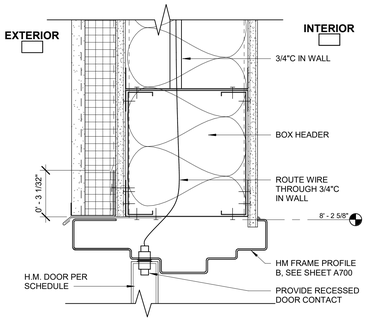

H.M. EXT. DOOR HEAD @ PLASTER WALLS

DOOR CONTACT - RECESSED N.T.S. 12

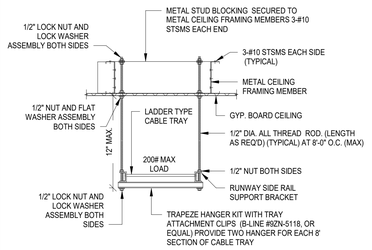

CABLE TRAY MOUNTING N.T.S. 6

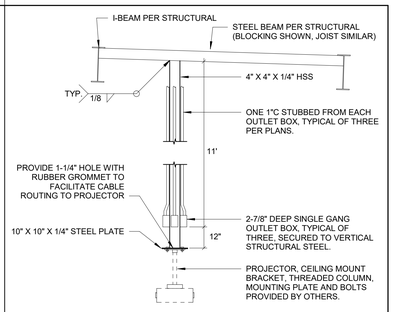

CEILING PROJECTOR MOUNTING N.T.S. 1

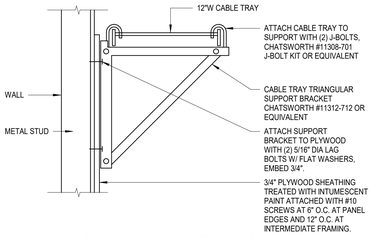

SIDE MOUNTING BRACKET AT WALL

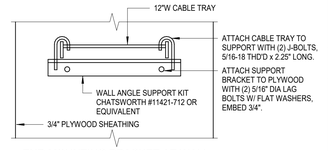

END MOUNTING BRACKET AT WALL

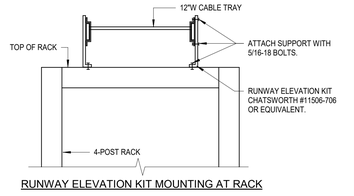

RUNWAY ELEVATION KIT MOUNTING AT RACK

MAX WT. OF LOADED CABLE TRAY 20LB./LF

CABLE RUNWAY MOUNTING WALL N.T.S. 8

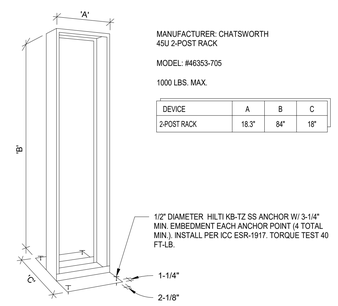

MANUFACTURER: CHATSWORTH 45U 2-POST RACK

MODEL: #46353-705

1000 LBS. MAX.

DEVICE	A	B	C
2-POST RACK	18.3"	84"	18"

FLOOR MOUNTED 2-POST RACK N.T.S. 3

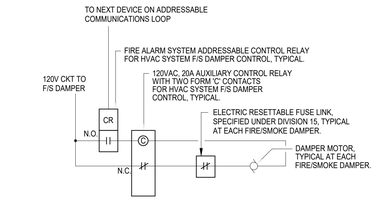

FIRE/SMOKE DAMPER CONTROL

1. THE FIRE ALARM CONTROL PANEL SHALL BE PROGRAMMED SUCH THAT ACTIVATION OF A CEILING MOUNTED, FIRE ALARM AREA SMOKE DETECTOR WITHIN A ROOM/AREA ASSOCIATED WITH A PARTICULAR HVAC UNIT'S DUCT SYSTEM WILL CAUSE ALL FIRE/SMOKE DAMPERS WITHIN THAT HVAC UNIT'S DUCT SYSTEM TO CLOSE.

2. THE AUXILIARY CONTROL RELAY SUPPLYING POWER TO THE FIRE/SMOKE DAMPER IS DEPICTED IN THE "SYSTEM NORMAL" STATE. IN THE "SYSTEM NORMAL" STATE THE COIL IS UN-ENERGIZED AND THE CONTACT IS CLOSED. UPON ALARM THE COIL SHALL BE ENERGIZED AND THE CONTACT SHALL OPEN.

SCOPE OF WORK	PROVIDE	INSTALL
FIRE/SMOKE DAMPER	MECH.	MECH.
AUXILIARY CONTROL RELAY	ELEC.	ELEC.
WIRING BETWEEN AUXILIARY CONTROL RELAY AND ELEC. FIRE/SMOKE DAMPER	ELEC.	ELEC.

FIRE/SMOKE DAMPER CONTROLLED BY AREA SMOKE DETECTOR N.T.S. 13

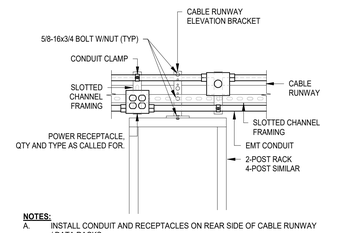

NOTES:
A. INSTALL CONDUIT AND RECEPTACLES ON REAR SIDE OF CABLE RUNWAY / DATA RACKS.

POWER RECEPTACLE AT CABLE RUNWAY N.T.S. 4

PLOT DATE: 11/2/2022 9:55:22 AM

FOR BID ONLY

Teter, LLP expressly reserves its common law copyright and other property rights in these plans. This document, the ideas and designs incorporated herein, as an instrument of professional service, is not to be used in whole or in part, for any other project without prior written authorization.

MARK	DATE	DESCRIPTION
	11/1/22	DSA BACKCHECK

TETER, LLP
FRESNO HEADQUARTERS
VISALIA | BAKERSFIELD | MODESTO | SAN LUIS OBISPO
ARCHITECTS ENGINEERS CONNECTED
TETER

TULARE CAMPUS CTE
COLLEGE OF THE SEQUOIAS
4999 E. BARDSLEY AVE.
TULARE, CA

DRAWING TITLE
ELECTRICAL DETAILS - SIGNAL

PROJECT NO.
21-12032

DRAWING
E602

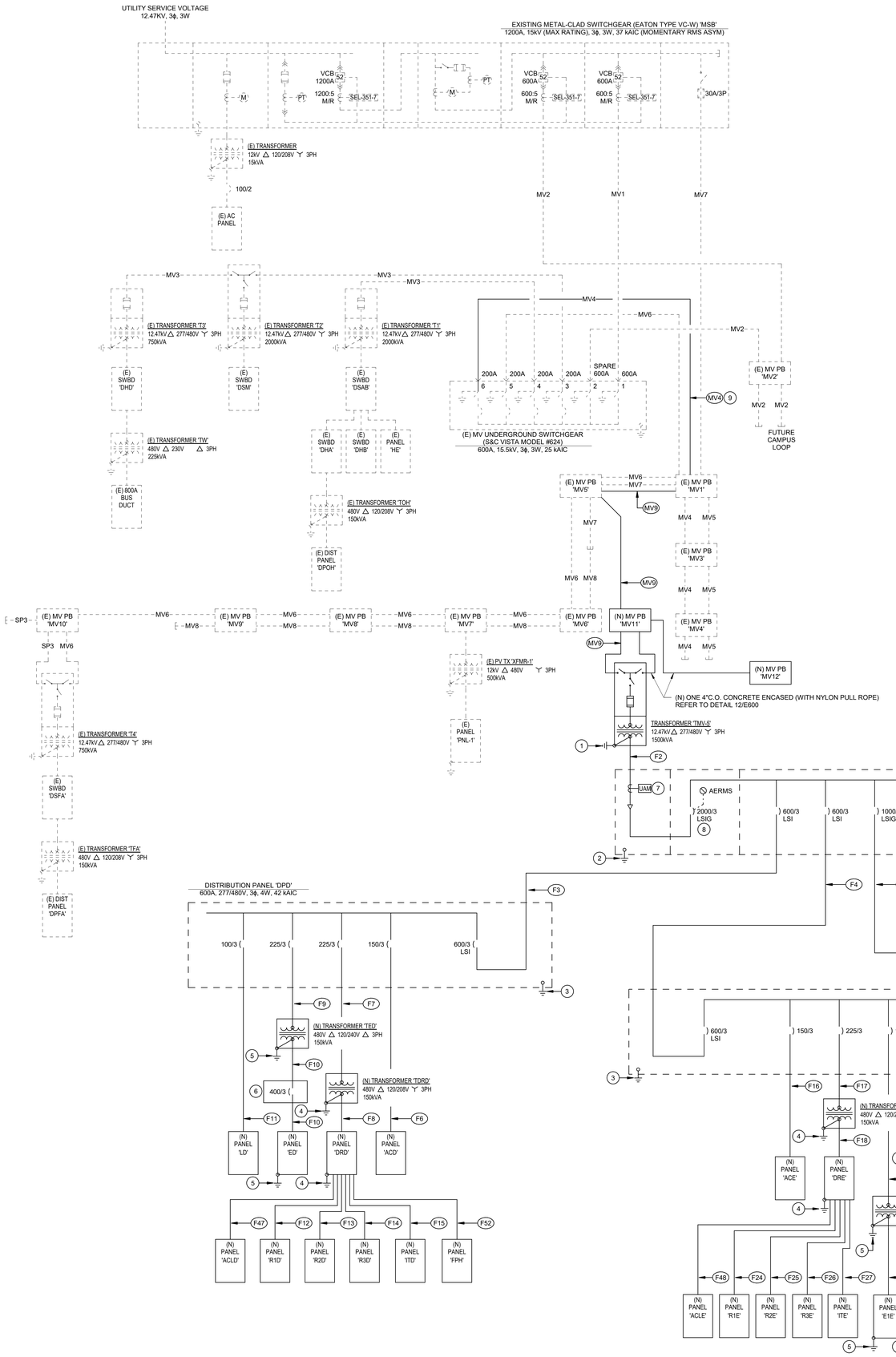

KEYNOTES

1. MEDIUM VOLTAGE TRANSFORMER GROUND RING PER DETAIL 2/E600.
2. SYSTEM GROUND PER DETAIL 15/E600.
3. REMOTE BUILDING GROUND PER DETAIL 5/E600.
4. GROUND PER DETAIL 4/E600.
5. GROUND PER DETAIL 25/E600.
6. PROVIDE 300A, 3-POLE CIRCUIT BREAKER IN SEPARATE ENCLOSURE.
7. 2019 CA ENERGY CODE COMPLIANT USER-ACCESSIBLE METER WITH THE FOLLOWING FEATURES:
   1. INSTANTANEOUS kW DEMAND
   2. HISTORIC PEAK DEMAND
   3. RESETTABLE kWh
   4. kWh PER RATE PERIOD
8. GROUND FAULT FEATURE OF MAIN CIRCUIT BREAKER SHALL BE TESTED BY AN INDEPENDENT TESTING AGENCY IN ACCORDANCE WITH NETA SPECIFICATIONS AND A REPORT SHALL BE SUBMITTED TO THE ENGINEER.
9. RUN NEW FEEDER PER SCHEDULE ON E801 IN (E) CONDUIT.

GENERAL NOTES

A. REFER TO DRAWING E801 FOR FEEDER SCHEDULE.

B. CIRCUIT BREAKERS SUPPLYING CLASS 1 TRANSFORMERS SHALL BE LOCKABLE IN THE OFF POSITION.

C. ARC-FLASH HAZARD WARNING LABELS SHALL BE PROVIDED AT ELECTRICAL EQUIPMENT SUCH AS SWITCHBOARDS AND PANELBOARDS IN ACCORDANCE WITH CEC 110.16.

D. CIRCUIT IDENTIFICATION - A TYPEWRITTEN CIRCUIT DIRECTORY SHALL BE PROVIDED AT EACH PANELBOARD AND SWITCHBOARD IN ACCORDANCE WITH CEC ARTICLE 408.4(A). THE CONTRACTOR SHALL DEVELOP AND PREPARE THE CIRCUIT IDENTIFICATION DESCRIPTION BASED ON THE AS-BUILT CONDITION.

E. SOURCE OF SUPPLY IDENTIFICATION - ALL SWITCHBOARDS, PANELBOARDS AND TRANSFORMERS SHALL HAVE A TYPEWRITTEN LABEL APPLIED INDICATING THE DEVICE OR EQUIPMENT WHERE THE POWER SUPPLY ORIGINATES PER CEC ARTICLE 408.4(B).

F. CIRCUIT BREAKERS THAT ARE 1200A OR LARGER SHALL HAVE AN ARC ENERGY REDUCTION FEATURE TO REDUCE CLEARING TIME. THE ARC ENERGY REDUCTION FEATURE SHALL BE AN ARC ENERGY-REDUCING MAINTENANCE SWITCH (AERMS) WITH A LOCAL STATUS INDICATOR. WHEN THE SWITCH IS TURNED ON IT SHALL REDUCE THE CLEARING TIME AND SETS THE INTANTANEOUS PICKUP CLEARING TIME TO BE 2 TIMES FASTER THAN THE NORMAL INSTANTANEOUS PICKUP SENSOR AMPERAGE.

FOR BID ONLY

Teter, LLP expressly reserves its common law copyright and other property rights in these plans. This document, the ideas and designs incorporated herein, as an instrument of professional service, is not to be used in whole or part, for any other project without prior written authorization.

MARK	DATE	DESCRIPTION
	11/1/22	DSA BACKCHECK

REGISTERED PROFESSIONAL ENGINEER
CHRISTOPHER M. TETER
No. E12953
ELECTRICAL
CALIFORNIA
11-30-23

TETER, LLP
FRESNO HEADQUARTERS
VISALIA | BAKERSFIELD | MODESTO | SAN LUIS OBISPO
ARCHITECTS ENGINEERS CONNECTED

TULARE CAMPUS CTE
COLLEGE OF THE SEQUOIAS
4999 E. BARDSLEY AVE.
TULARE, CA

DRAWING TITLE
SINGLE LINE DIAGRAM

PROJECT NO.
21-12032

DRAWING
E700

\\tet-file1\Users\corey.stone\Documents\12032-E-COS Tulare CTE_corey.stone.rvt
PLOT DATE: 11/2/2022 9:55:25 AM

\\tet-file1\Users\corey.stone\Documents\12032-E-COS Tulare CTE_corey.stone.rvt

FIRE ALARM CABLE SCHEDULE

CABLE DESIGNATION	DESCRIPTION	MANUFACTURER & CATALOG #	OUTER JACKET COLOR	SYSTEM	USE
'FNET'	4-STRAND MULTI-MODE FIBER OPTIC CABLE (62.5/125um)	CORNING INFINICOR 300 OR EQUIVALENT	BLACK	FIRE ALARM	SITE OPTICAL FIBER FIRE ALARM NETWORK
'FA'	1 PR, #16 AWG SOLID UNSHIELDED FPL	WEST PENN #D990	RED	FIRE ALARM	ADDRESSABLE SLC LOOP CABLE - INTERIOR
'FAS'	1 PR, #16 AWG STRANDED UNSHIELDED AQUASEAL FPL	WEST PENN #AQC225	BLACK	FIRE ALARM	SITE ADDRESSABLE SLC LOOP CABLE - EXTERIOR/OUTDOOR
'FS'	1 PR, #14 AWG SOLID SHIELDED, FPLP	WEST PENN #60992B	RED	FIRE ALARM	AUDIBLE (SPEAKER) NOTIFICATION APPLIANCE CIRCUIT - INTERIOR
'FV'	1 PR, #12 SOLID UNSHIELDED FPLP	WEST PENN #60995B	RED	FIRE ALARM	VISUAL (STROBE) NOTIFICATION APPLIANCE CIRCUIT - INTERIOR

FIRE ALARM CABLE SCHEDULE — N.T.S. — 3

FIRE ALARM SYSTEM DESCRIPTION

THE FIRE ALARM SYSTEM DESCRIBED BY THESE DRAWINGS AND ASSOCIATED SPECIFICATIONS IS A MANUAL AND AUTOMATIC SYSTEM. THIS SYSTEM UTILIZES SMOKE DETECTORS ON CEILINGS AND IN THE ROOMS HOUSING THE FIRE ALARM SYSTEM EQUIPMENT WITH FIRE SPRINKLERS THROUGHOUT THE BUILDING. FIRE SPRINKLERS SHALL BE INSTALLED IN ATTICS IN LIEU OF HEAT DETECTORS. THE SYSTEM IS ADDRESSABLE AND IS WIRED CLASS 'B' WITHIN THE BUILDINGS AND CLASS 'B' BETWEEN BUILDINGS.

FIRE ALARM APPROVAL

THE FIRE ALARM SYSTEM DESIGN IS A "COMPLETE PLAN SUBMITTAL" PER DSA FIRE ALARM SUBMITTAL GUIDELINES. THE CONTRACTOR SHALL INSTALL THE SYSTEM AS SHOWN AND AS HEREIN SPECIFIED. IF ANY SUBSTITUTION OF FIRE ALARM EQUIPMENT IS TO BE REQUESTED, SUCH REQUEST SHALL BE MADE A MINIMUM OF TWO WEEKS PRIOR TO PROJECT BID DATE. THE CONTRACTOR SHALL BE RESPONSIBLE FOR SUBMITTING THE SUBSTITUTION PER THE DSA GUIDELINES AND SHALL PAY ALL ADDITIONAL COSTS REQUIRED TO ACCOMMODATE REVIEW OF THE SUBSTITUTED FIRE ALARM SYSTEM BY DSA, WHETHER OR NOT SUCH APPROVAL IS GIVEN. THE CONTRACTOR'S SUBMITTAL SHALL INCLUDE MANUFACTURER'S CATALOG CUT SHEETS AND CSFM LISTING SHEETS FOR THE INDIVIDUAL COMPONENTS COMPRISING THE SUBSTITUTED FIRE ALARM SYSTEM, BATTERY LOAD CALCULATIONS AND VOLTAGE DROP CALCULATIONS FOR EACH SIGNALING CIRCUIT.

APPLICABLE CODES AND STANDARDS

2019 CA BUILDING CODE - CCR, TITLE 24, PART 2, VOLUMES 1 & 2
(2018 IBC AND CALIFORNIA AMENDMENTS)
2019 CA ELECTRICAL CODE - CCR, TITLE 24, PART 3
(2017 NEC AND CALIFORNIA AMENDMENTS)
2019 CA MECHANICAL CODE - CCR, TITLE 24, PART 4
(2018 UMC AND CALIFORNIA AMENDMENTS)
2019 CA PLUMBING CODE - CCR, TITLE 24, PART 5
(2018 UPC AND CALIFORNIA AMENDMENTS)
2019 CA FIRE CODE - CCR, TITLE 24, PART 9
(2018 IFC AND CALIFORNIA AMENDMENTS)
2019 CA REFERENCE STANDARDS CODE - CCR, TITLE 24, PART 12
2016 NFPA 13, INSTALLATION OF SPRINKLER SYSTEMS AND 2019 CALIFORNIA AMENDMENTS
2016 NFPA 72, NATIONAL FIRE ALARM CODE, AND 2019 CALIFORNIA AMENDMENTS
PUBLIC SAFETY, STATE FIRE MARSHAL REGULATIONS - CCR, TITLE 19
DSA GUIDELINES FOR FIRE AND LIFE SAFETY SYSTEMS, DIVISION OF THE STATE ARCHITECT OFFICE OF REGULATION SERVICES.

FIRE ALARM GENERAL NOTES

1. UNDERGROUND AND EXTERIOR CONDUITS WILL HAVE WATERTIGHT FITTINGS. (CEC 110.11 AND CEC 300.6)
2. OUTLETS ON OPPOSITE SIDES OF A FIRE RATED WALL SHALL BE INSTALLED WITH A MINIMUM HORIZONTAL SPACING OF TWO FEET.
3. FIRE ALARM DEVICE MOUNTING HEIGHTS SHALL BE AS FOLLOWS:
   a. PULL STATION - OPERABLE PART OF A MANUALLY ACTUATED ALARM INITIATING DEVICE SHALL BE NOT LESS THAN 42" FROM FINISHED FLOOR, AND TOP OF BOX SHALL NOT BE MORE THAN 48" FROM FINISHED FLOOR. (CBC 11B 308.1.1, NFPA 72 17.14.5)
   b. INTERIOR AUDIBLE NOTIFICATION APPLIANCE - AT LEAST 90" TO THE TOP OF DEVICE ABOVE FINISHED FLOOR AND NOT LESS THAN 6" BELOW FINISHED CEILING. (NFPA 72 18.4.8.1)
   c. WALL-MOUNTED STROBE OR SPEAKER/STROBE - AT LEAST 80" TO BOTTOM OF LENS AND NOT GREATER THAN 96" TO TOP OF LENS ABOVE FINISHED FLOOR. (NFPA 72 18.5.5.1)
4. AUDIBLE SIGNAL DEVICES OF A FIRE ALARM SYSTEM INTENDED TO ALERT ALL OCCUPANTS SHALL BE SO LOCATED AND UNOBSTRUCTED AS TO CAUSE A LEVEL OF AUDIBILITY OF AT LEAST 15 dBA ABOVE AVERAGE AMBIENT SOUND LEVEL BUT NOT LESS THAN 75 dBA AT TEN FEET, OR MORE THAN 110 dBA IN TOTAL. (NFPA 72 18.4.3.1, 18.4.1.2 AND CFC 907.5.2.1.2)
5. AMBIENT NOISE LEVELS SHALL BE CONSTRUED TO MEAN THAT WHICH CAN NORMALLY BE EXPECTED TO EXIST WHEN THE FACILITY, BUILDING, ROOM OR AREA IS FUNCTIONING UNDER NORMAL OPERATIVE OR WORKING CONDITIONS. (CFC 907.5.2.1.1)
6. AUDIBLE DEVICES SHALL SOUND THE CA UNIFORM FIRE ALARM SIGNAL IN TEMPORAL MODE. PROVIDE AT LEAST ONE EXTERIOR AUDIBLE DEVICE ON BUILDING FOR E OCCUPANCIES. (CFC 907.5.2.1.3)
7. EMERGENCY VOICE/ALARM COMMUNICATION SYSTEM SHALL COMPLY WITH CBC 907.2.3 AND NFPA 72 24.4.2
8. VISUAL DEVICES SHALL NOT EXCEED TWO FLASHES PER SECOND AND SHALL NOT BE SLOWER THAN ONE FLASH EVERY SECOND. (NFPA 72 18.5.3.1)
9. AUTOMATIC SMOKE DETECTION SHALL BE PROVIDED AT THE LOCATION OF EACH FIRE ALARM CONTROL UNIT, NOTIFICATION APPLIANCE CIRCUIT POWER EXTENDER AND SUPERVISING STATION TRANSMITTING EQUIPMENT TO PROVIDE NOTIFICATION OF FIRE AT THAT LOCATION. (NFPA 72 10.4.4)
10. BRANCH CIRCUITS PROTECTING FIRE ALARM EQUIPMENT SHALL BE LABELED PER NFPA 72 10.6.5.2.2 AND SHALL INCLUDE A LISTED CIRCUIT BREAKER LOCKING DEVICE PER NFPA 72 10.6.5.4
11. COMPLETE THE NFPA 72 RECORD OF COMPLETION, TESTING ALL DEVICES AND APPLIANCES. PROVIDE A COPY OF THE COMPLETED RECORD OF COMPLETION TO THE OWNER (SCHOOL DISTRICT), ARCHITECT, LOCAL FIRE AUTHORITY, AND DSA VIA THE PROJECT INSPECTOR. TESTING OF THE ENTIRE SYSTEM SHALL BE MADE IN THE PRESENCE OF THE LOCAL FIRE AUTHORITY AND THE DSA INSPECTOR OF RECORD (IOR). FINAL TEST SHALL INCLUDE READ OUT VERIFICATION FORM FROM CENTER STATION.
12. THE AUTOMATIC ALARM SYSTEM SHALL BE INSTALLED, TESTED, AND MAINTAINED IN ACCORDANCE WITH THE STATE FIRE MARSHAL'S REGULATIONS (CFC 907.8.5, NFPA 72 14.4.1.1, NFPA 72 14.5)

FIRE ALARM CODES AND NOTES — 5

FIRE ALARM SYSTEM EQUIPMENT LEGEND

SYMBOL	DESCRIPTION
'FACP-F'	FIRE ALARM CONTROL PANEL 'FACP': GAMEWELL-FCI E3 SERIES W/ AUTOMATIC CHARGING SYSTEM DIMENSIONS: 30"H x19 3/8"W x 4 1/2"D C.S.F.M. #7165-1703:0125
'FATP-D' 'FATP-E'	FIRE ALARM INTELLIGENT NETWORK TRANSPONDER PANEL: GAMEWELL-FCI #INX DIMENSIONS: 19 3/8"H x19 3/8"W x 4 1/2"D C.S.F.M. #7165-1703:0125
LOC	LOCAL OPERATING CONSOLE: GAMEWELL-FCI #LOC W/ PAGING MICROPHONE #NCC-MIC, AND ANNUNCIATOR #NGA C.S.F.M. #7165-1703:0125
SD	ADDRESSABLE SMOKE DETECTOR (ON CEILING) GAMEWELL-FCI #ASD-PL3 C.S.F.M #7272-1703:0501 BASE: #B501 C.S.F.M. #7300-1653:0109
F	ADDRESSABLE MANUAL PULL STATION GAMEWELL-FCI #MS-7A C.S.F.M. #7150-1703:0109
AM	ADDRESSABLE SUPERVISED INPUT MODULE: GAMEWELL-FCI #AMM-4F C.S.F.M. #7300-1703:0102
CR	ADDRESSABLE RELAY CONTROL MODULE: GAMEWELL-FCI #ACM-2RF C.S.F.M. #7300-1703:0102
V XX	ADDRESSABLE STROBE ANNUNCIATOR - WALL MOUNTED (XX REPRESENTS CANDELA): EATON #ELSTR C.S.F.M. #7135-0785:0504
SV XX	ADDRESSABLE SPEAKER/STROBE ANNUNCIATOR - WALL MOUNTED (XX REPRESENTS CANDELA): EATON #ELSPSTR C.S.F.M. #7320-0785:0505
2W S WP	ADDRESSABLE OUTDOOR SPEAKER - WALL MOUNTED: EATON #ET-1010-R W/WEATHERPROOF BACK BOX: EATON #WBB C.S.F.M. #7320-0785:0105
	END OF LINE SUPERVISION RELAY SYSTEM SENSOR #EOLR-1 C.S.F.M. # 7300-1653:0103

FIRE ALARM MONITORING NOTE

AUTOMATIC FIRE ALARM SYSTEMS SHALL TRANSMIT THE ALARM, SUPERVISORY AND TROUBLE SIGNALS TO AN APPROVED SUPERVISING STATION AS REQUIRED BY NFPA 72 AS AMENDED BY CFC CHAPTER 80. THE SUPERVISING STATION SHALL BE LISTED AS EITHER UUFX OR UUJS BY UNDERWRITERS LABORATORY OR SHALL MEET THE REQUIREMENTS OF FACTORY MUTUAL RESEARCH APPROVAL STANDARD 3011. SUPERVISION OF SYSTEM AND LEASED TELEPHONE LINES SHALL BE ARRANGED BY OWNER.

FIRE ALARM LEGEND — 4

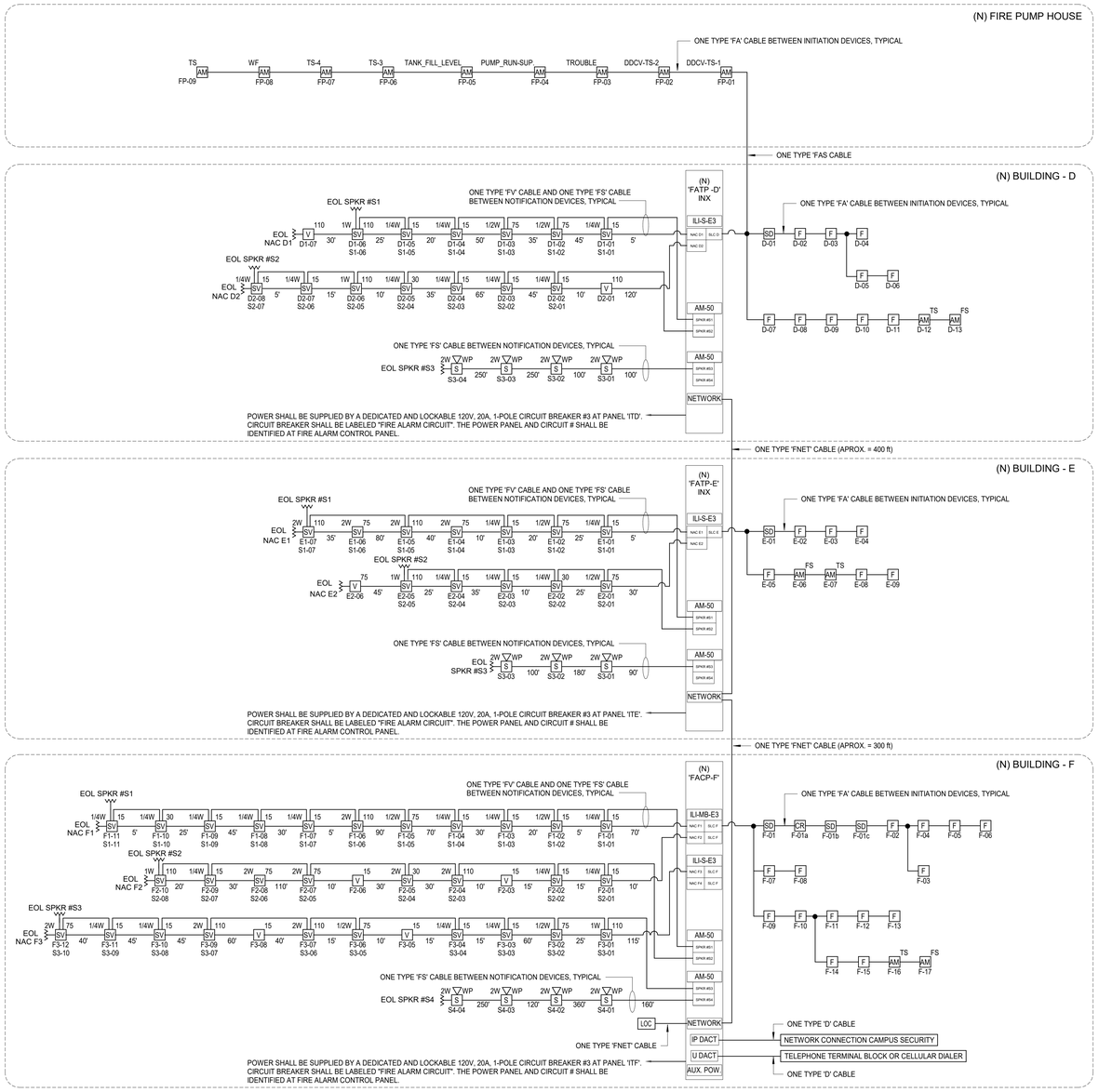

FIRE ALARM RISER DIAGRAM — 1

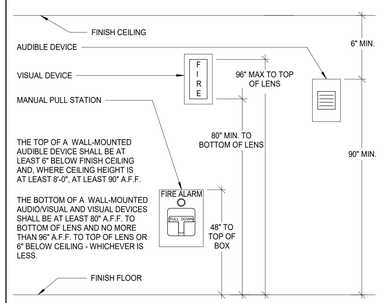

FIRE ALARM DEVICE ELEVATIONS — N.T.S. — 6

FIRE ALARM SYSTEM OPERATIONAL MATRIX

DEVICE	ACTIVATE EVACUATION SIGNALS/STROBES	SHUTDOWN FIRE/SMOKE DAMPER, OR ACTIVATE SMOKE VENT RELEASE	SHUTDOWN HVAC EQUIPMENT	ANNUNCIATE AT BUILDING FACP AND ALL REMOTE ANNUNCIATORS	SEND SIGNAL TO CENTRAL STATION
FIRE ALARM PANEL SYSTEM TROUBLE				X	X
MANUAL PULL STATION	X			X	X
SMOKE DETECTOR	X	X		X	X
WATER FLOW SWITCH	X			X	X
VALVE TAMPER SWITCH				SUPERVISORY	SUPERVISORY

FIRE ALARM OPERATIONAL MATRIX — 2

PLOT DATE: 11/2/2022 9:55:31 AM

FOR BID ONLY

Teter, LLP expressly reserves its common law copyright and other property rights in these plans. This document, the ideas and designs incorporated herein, as an instrument of professional service, is not to be used in whole or in part, for any other project without prior written authorization.

MARK	DATE	DESCRIPTION
	11/1/22	DSA BACKCHECK

TETER, LLP
ARCHITECTS ENGINEERS CONNECTED
FRESNO HEADQUARTERS
VISALIA | BAKERSFIELD | MODESTO | SAN LUIS OBISPO

TETER

TULARE CAMPUS CTE
COLLEGE OF THE SEQUOIAS
4999 E. BARDSLEY AVE.
TULARE, CA

DRAWING TITLE
FIRE ALARM RISER DIAGRAM & NOTES

PROJECT NO.
21-12032

DRAWING
E710

\\tet-file1\Users\corey.stone\Documents\12032-E-COS Tulare CTE_corey.stone.rvt

FIRE ALARM EXPANDER 'FACP-F' BATTERY CALCULATIONS

QTY.	DEVICE	DESCRIPTION	STANDBY CURRENT/ DEVICE	STANDBY CURRENT	ALARM CURRENT/ DEVICE	ALARM CURRENT
1	ILI-MB-E3	Intel. Loop Interface, Main Board (ILI-MB-E3)	0.0810	0.0810	0.1500	0.1500
1	ILI-S-E3	Intel. Loop Interface, Expansion Board (ILI-S-E3)	0.1180	0.1180	0.1190	0.1190
1	PM-9	120V Power Supply Sub-Assembly (PM-9)	0.0500	0.0500	0.0910	0.0910
2	DACT-E3	Digital Communicator (DACT-E3)	0.0180	0.0360	0.0180	0.0360
2	INI-VGC	Intel. Network Command Center (INI-VGC)	0.1500	0.3000	0.1500	0.3000
2	AM-50	Amplifier Sub-assembly, 50 watt 25V (AM-50)	0.0860	0.1720	2.2060	4.4120
2	NGA	Network LCD Annunicator (NGA)	0.2000	0.4000	0.2000	0.4000
1	Microphone	Voice Paging Microphone (Microphone)	0.0010	0.0010	0.0010	0.0010
1	ASM-16	Auxiliary Switch Sub-Assembly (ASM-16)	0.0200	0.0200	0.0200	0.0200
1	RPT-E3-UTP	ARCNET Repeater (RPT-E3)	0.0160	0.0160	0.0170	0.0170
1	FML-E3	Multi-Mode Fiber Loop Module with ST connections	0.0530	0.0530	0.0530	0.0530
0		No Device Selected	0.0000	0.0000	0.0000	0.0000
0		No Device Selected	0.0000	0.0000	0.0000	0.0000
1	CR (2RF)	Gamewell-FCI #AOM-2RF Addressable Relay Control Module	0.0003	0.0003	0.0003	0.0003
14	F	Gamewell-FCI #MS-7AF Addressable Pull Station	0.0003	0.0042	0.0030	0.0420
3	SD	Gamewell-FCI #ASD-PL3 Photoelectric Addressable Smoke Sensor (Ceiling)	0.0003	0.0009	0.0045	0.0135
2	AM	Gamewell-FCI #AOM-2RF Addressable Relay Control Module	0.0003	0.0006	0.0003	0.0006
4	ELST-15	Strobe Wall, 24 VDC, Multi-Candela, 15 cd, red	0.0000	0.0000	0.0220	0.0880
15	ELSPST-15	Speaker Strobe Wall, 24 VDC, Multi-Candela, 15 cd, red	0.0000	0.0000	0.0220	0.3300
2	ELSPST-30	Speaker Strobe Wall, 24 VDC, Multi-Candela, 30 cd, red	0.0000	0.0000	0.0300	0.0600
6	ELSPST-75	Speaker Strobe Wall, 24 VDC, Multi-Candela, 75 cd, red	0.0000	0.0000	0.0600	0.3600
6	ELSPST-110	Speaker Strobe Wall, 24 VDC, Multi-Candela, 110 cd, red	0.0000	0.0000	0.0860	0.5160
		VOICE EVACUATION SYSTEM SPEAKERS	**SPEAKER POWER (W)**			
15	ELSPST-1/4W	Speaker Strobe Wall, 24 VDC, Multi-Candela, (1/4-Watt), 25/70 Vrms, red	0.2500		0.0100	0.1500
5	ELSPST-1/2W	Speaker Strobe Wall, 24 VDC, Multi-Candela, (1/2-Watt), 25/70 Vrms, red	0.5000		0.0200	0.1000
1	ELSPST-1W	Speaker Strobe Wall, 24 VDC, Multi-Candela, (1-Watt), 25/70 Vrms, red	1.0000		0.0400	0.0400
8	ELSPST-2W	Speaker Strobe Wall, 24 VDC, Multi-Candela, (2-Watt), 25/70 Vrms, red	2.0000		0.0800	0.6400
4	ET-1010-R (2-Watt)	W.P. Speaker, 1/8 to 8 watts, red	2.0000		0.0800	0.3200
		TOTALS		1.2530		8.2594

TOTAL ALARM AMP-HOURS (15 MIN.) =	0.25 HR x	8.259 A	=	2.0649 A-H
TOTAL STANDBY AMP-HOURS (24 HRS) =	24 HR x	1.253 A	=	30.0720 A-H
TOTAL REQUIRED AMP-HOURS =			=	**32.1369 A-H**
TOTAL DESIGN AMP-HOURS WITH 20% SAFETY FACTOR =			=	**38.5642 A-H**
BATTERY CAPACITY REQUIREMENTS				**55.000 A-H**

	EMERGENCY VOICE ALARM COMMUNICATION SYSTEM SPEAKERS		SPEAKER POWER (W)	TOTAL WATTAGE
15	ELSPST-1/4W	Speaker Strobe Wall, 24 VDC, Multi-Candela, (1/4-Watt), 25/70 Vrms, red	0.2500	3.75
7	ELSPST-1/2W	Speaker Strobe Wall, 24 VDC, Multi-Candela, (1/2-Watt), 25/70 Vrms, red	0.5000	3.50
6	ELSPST-1W	Speaker Strobe Wall, 24 VDC, Multi-Candela, (1-Watt), 25/70 Vrms, red	1.0000	6.00
4	ET-1010-R (2-Watt)	W.P. Speaker, 1/8 to 8 watts, red	2.0000	8.00
TOTAL SPEAKER WATTAGE - AMP #1			=	**21.25 W**
AMPLIFIER WATTAGE (+20% INSERTION LOSS FACTOR)			=	**25.50 W**
SPECIFIED AMPLIFIER WATTAGE			=	**50.00 W**

FIRE ALARM EXPANDER 'FATP-D' BATTERY CALCULATIONS

QTY.	DEVICE	DESCRIPTION	STANDBY CURRENT/ DEVICE	STANDBY CURRENT	ALARM CURRENT/ DEVICE	ALARM CURRENT
1	ILI-S-E3	Intel. Loop Interface, Expansion Board (ILI-S-E3)	0.1180	0.1180	0.1190	0.1190
1	PM-9	120V Power Supply Sub-Assembly (PM-9)	0.0500	0.0500	0.0910	0.0910
1	INI-VGC	Intel. Network Command Center (INI-VGC)	0.1500	0.1500	0.1500	0.1500
2	AM-50	Amplifier Sub-assembly, 50 watt 25V (AM-50)	0.0860	0.1720	2.2060	4.4120
1	RPT-E3-UTP	ARCNET Repeater (RPT-E3)	0.0160	0.0160	0.0170	0.0170
1	FML-E3	Multi-Mode Fiber Loop Module with ST connections	0.0530	0.0530	0.0530	0.0530
0		No Device Selected	0.0000	0.0000	0.0000	0.0000
10	F	Gamewell-FCI #MS-7AF Addressable Pull Station	0.0003	0.0030	0.0030	0.0300
1	SD	Gamewell-FCI #ASD-PL3 Photoelectric Addressable Smoke Sensor (Ceiling)	0.0003	0.0003	0.0045	0.0045
2	AM	Gamewell-FCI #AOM-2RF Addressable Relay Control Module	0.0003	0.0006	0.0003	0.0006
0		No Device Selected	0.0000	0.0000	0.0000	0.0000
0		No Device Selected	0.0000	0.0000	0.0000	0.0000
0		No Device Selected	0.0000	0.0000	0.0000	0.0000
0		No Device Selected	0.0000	0.0000	0.0000	0.0000
0		No Device Selected	0.0000	0.0000	0.0000	0.0000
0		No Device Selected	0.0000	0.0000	0.0000	0.0000
2	ELST-110	Strobe Wall, 24 VDC, Multi-Candela, 110 cd, red	0.0000	0.0000	0.0860	0.1720
		VOICE EVACUATION SYSTEM SPEAKERS	**SPEAKER POWER (W)**			
9	ELSPST-1/4W	Speaker Strobe Wall, 24 VDC, Multi-Candela, (1/4-Watt), 25/70 Vrms, red	0.2500		0.0100	0.0900
2	ELSPST-1/2W	Speaker Strobe Wall, 24 VDC, Multi-Candela, (1/2-Watt), 25/70 Vrms, red	0.5000		0.0200	0.0400
2	ELSPST-1W	Speaker Strobe Wall, 24 VDC, Multi-Candela, (1-Watt), 25/70 Vrms, red	1.0000		0.0400	0.0800
4	ET-1010-R (2-Watt)	W.P. Speaker, 1/8 to 8 watts, red	2.0000		0.0800	0.3200
		TOTALS		0.5629		6.1151

TOTAL ALARM AMP-HOURS (15 MIN.) =	0.25 HR x	6.115 A	=	1.5288 A-H
TOTAL STANDBY AMP-HOURS (24 HRS) =	24 HR x	0.563 A	=	13.5096 A-H
TOTAL REQUIRED AMP-HOURS =			=	**15.0384 A-H**
TOTAL DESIGN AMP-HOURS WITH 20% SAFETY FACTOR =			=	**18.0461 A-H**
BATTERY CAPACITY REQUIREMENTS				**31.000 A-H**

	EMERGENCY VOICE ALARM COMMUNICATION SYSTEM SPEAKERS		SPEAKER POWER (W)	TOTAL WATTAGE
9	ELSPST-1/4W	Speaker Strobe Wall, 24 VDC, Multi-Candela, (1/4-Watt), 25/70 Vrms, red	0.2500	2.25
2	ELSPST-1/2W	Speaker Strobe Wall, 24 VDC, Multi-Candela, (1/2-Watt), 25/70 Vrms, red	0.5000	1.00
2	ELSPST-1W	Speaker Strobe Wall, 24 VDC, Multi-Candela, (1-Watt), 25/70 Vrms, red	1.0000	2.00
4	ET-1010-R (2-Watt)	W.P. Speaker, 1/8 to 8 watts, red	2.0000	8.00
TOTAL SPEAKER WATTAGE - AMP #1			=	**13.25 W**
AMPLIFIER WATTAGE (+20% INSERTION LOSS FACTOR)			=	**15.90 W**
SPECIFIED AMPLIFIER WATTAGE			=	**50.00 W**

FIRE ALARM EXPANDER 'FATP-E' BATTERY CALCULATIONS

QTY.	DEVICE	DESCRIPTION	STANDBY CURRENT/ DEVICE	STANDBY CURRENT	ALARM CURRENT/ DEVICE	ALARM CURRENT
1	ILI-S-E3	Intel. Loop Interface, Expansion Board (ILI-S-E3)	0.1180	0.1180	0.1190	0.1190
1	PM-9	120V Power Supply Sub-Assembly (PM-9)	0.0500	0.0500	0.0910	0.0910
1	INI-VGC	Intel. Network Command Center (INI-VGC)	0.1500	0.1500	0.1500	0.1500
2	AM-50	Amplifier Sub-assembly, 50 watt 25V (AM-50)	0.0860	0.1720	2.2060	4.4120
1	RPT-E3-UTP	ARCNET Repeater (RPT-E3)	0.0160	0.0160	0.0170	0.0170
1	FML-E3	Multi-Mode Fiber Loop Module with ST connections	0.0530	0.0530	0.0530	0.0530
0		No Device Selected	0.0000	0.0000	0.0000	0.0000
6	F	Gamewell-FCI #MS-7AF Addressable Pull Station	0.0003	0.0018	0.0030	0.0180
1	SD	Gamewell-FCI #ASD-PL3 Photoelectric Addressable Smoke Sensor (Ceiling)	0.0003	0.0003	0.0045	0.0045
2	AM	Gamewell-FCI #AOM-2RF Addressable Relay Control Module	0.0003	0.0006	0.0003	0.0006
0		No Device Selected	0.0000	0.0000	0.0000	0.0000
0		No Device Selected	0.0000	0.0000	0.0000	0.0000
0		No Device Selected	0.0000	0.0000	0.0000	0.0000
0		No Device Selected	0.0000	0.0000	0.0000	0.0000
0		No Device Selected	0.0000	0.0000	0.0000	0.0000
0		No Device Selected	0.0000	0.0000	0.0000	0.0000
1	ELST-75	Strobe Wall, 24 VDC, Multi-Candela, 75 cd, red	0.0000	0.0000	0.0600	0.0600
		No Device Selected	0.0000	0.0000	0.0000	0.0000
4	ELSPST-15	Speaker Strobe Wall, 24 VDC, Multi-Candela, 15 cd, red	0.0000	0.0000	0.0220	0.0880
1	ELSPST-30	Speaker Strobe Wall, 24 VDC, Multi-Candela, 30 cd, red	0.0000	0.0000	0.0300	0.0300
4	ELSPST-75	Speaker Strobe Wall, 24 VDC, Multi-Candela, 75 cd, red	0.0000	0.0000	0.0600	0.2400
3	ELSPST-110	Speaker Strobe Wall, 24 VDC, Multi-Candela, 110 cd, red	0.0000	0.0000	0.0860	0.2580
		VOICE EVACUATION SYSTEM SPEAKERS	**SPEAKER POWER (W)**			
5	ELSPST-1/4W	Speaker Strobe Wall, 24 VDC, Multi-Candela, (1/4-Watt), 25/70 Vrms, red	0.2500		0.0100	0.0500
2	ELSPST-1/2W	Speaker Strobe Wall, 24 VDC, Multi-Candela, (1/2-Watt), 25/70 Vrms, red	0.5000		0.0200	0.0400
1	ELSPST-1W	Speaker Strobe Wall, 24 VDC, Multi-Candela, (1-Watt), 25/70 Vrms, red	1.0000		0.0400	0.0400
4	ELSPST-2W	Speaker Strobe Wall, 24 VDC, Multi-Candela, (2-Watt), 25/70 Vrms, red	2.0000		0.0800	0.3200
3	ET-1010-R (2-Watt)	W.P. Speaker, 1/8 to 8 watts, red	2.0000		0.0800	0.2400
		TOTALS		0.5617		6.2311

TOTAL ALARM AMP-HOURS (15 MIN.) =	0.25 HR x	6.231 A	=	1.5578 A-H
TOTAL STANDBY AMP-HOURS (24 HRS) =	24 HR x	0.562 A	=	13.4808 A-H
TOTAL REQUIRED AMP-HOURS =			=	**15.0386 A-H**
TOTAL DESIGN AMP-HOURS WITH 20% SAFETY FACTOR =			=	**18.0463 A-H**
BATTERY CAPACITY REQUIREMENTS				**31.000 A-H**

	EMERGENCY VOICE ALARM COMMUNICATION SYSTEM SPEAKERS		SPEAKER POWER (W)	TOTAL WATTAGE
5	ELSPST-1/4W	Speaker Strobe Wall, 24 VDC, Multi-Candela, (1/4-Watt), 25/70 Vrms, red	0.2500	1.25
2	ELSPST-1/2W	Speaker Strobe Wall, 24 VDC, Multi-Candela, (1/2-Watt), 25/70 Vrms, red	0.5000	1.00
3	ELSPST-1W	Speaker Strobe Wall, 24 VDC, Multi-Candela, (1-Watt), 25/70 Vrms, red	1.0000	3.00
3	ET-1010-R (2-Watt)	W.P. Speaker, 1/8 to 8 watts, red	2.0000	6.00
TOTAL SPEAKER WATTAGE - AMP #1			=	**11.25 W**
AMPLIFIER WATTAGE (+20% INSERTION LOSS FACTOR)			=	**13.50 W**
SPECIFIED AMPLIFIER WATTAGE			=	**50.00 W**

NAC 'F1' VOLTAGE DROP CALCULATION

QTY.	DEVICE	DESCRIPTION	ALARM CURRENT/ DEVICE	TOTAL ALARM CURRENT
8	ELSPST-15	Speaker Strobe Wall, 24 VDC, Multi-Candela, 15 cd, red	0.0220	0.1760
1	ELSPST-30	Speaker Strobe Wall, 24 VDC, Multi-Candela, 30 cd, red	0.0300	0.0300
1	ELSPST-75	Speaker Strobe Wall, 24 VDC, Multi-Candela, 75 cd, red	0.0600	0.0600
1	ELSPST-110	Speaker Strobe Wall, 24 VDC, Multi-Candela, 110 cd, red	0.0860	0.0860
0		No Device Selected	0.0000	0.0000
0		No Device Selected	0.0000	0.0000
0		No Device Selected	0.0000	0.0000
		TOTAL CURRENT ADDED TO CIRCUIT		0.352

LENGTH OF WIRE FROM FACP TO LAST DEVICE (IN FEET) =	**395**
ACTUAL SIZE OF WIRE INSTALLED = **12** AWG **6530** CIRCULAR MILS	
CALCULATED VOLTAGE DROP (IN VDC) =	**0.460**
CIRCUIT VOLTAGE CALCULATED AT LAST DEVICE (IN VDC) =	**23.5 VDC**
PERCENT VOLTAGE DROP (%) =	**1.92 %**

VOLTAGE DROP FORMULA:
VOLTAGE DROP = 2 X 10.8 x LENGTH OF CIRCUIT TO FARTHEST DEVICE x CURRENT / WIRE SIZE IN C.M.
COMPUTED WITH TOTAL CURRENT ON CIRCUIT AT MAXIMUM LENGTH (CLASS A CIRCUIT).

NAC 'F2' VOLTAGE DROP CALCULATION

QTY.	DEVICE	DESCRIPTION	ALARM CURRENT/ DEVICE	TOTAL ALARM CURRENT
2	ELST-15	Strobe Wall, 24 VDC, Multi-Candela, 15 cd, red	0.0220	0.0440
3	ELSPST-15	Speaker Strobe Wall, 24 VDC, Multi-Candela, 15 cd, red	0.0220	0.0660
1	ELSPST-30	Speaker Strobe Wall, 24 VDC, Multi-Candela, 30 cd, red	0.0300	0.0300
2	ELSPST-75	Speaker Strobe Wall, 24 VDC, Multi-Candela, 75 cd, red	0.0600	0.1200
2	ELSPST-110	Speaker Strobe Wall, 24 VDC, Multi-Candela, 110 cd, red	0.0860	0.1720
0		No Device Selected	0.0000	0.0000
		TOTAL CURRENT ADDED TO CIRCUIT		0.260

LENGTH OF WIRE FROM FACP TO LAST DEVICE (IN FEET) =	**280**
ACTUAL SIZE OF WIRE INSTALLED = **12** AWG **6530** CIRCULAR MILS	
CALCULATED VOLTAGE DROP (IN VDC) =	**0.241**
CIRCUIT VOLTAGE CALCULATED AT LAST DEVICE (IN VDC) =	**23.8 VDC**
PERCENT VOLTAGE DROP (%) =	**1 %**

VOLTAGE DROP FORMULA:
VOLTAGE DROP = 2 X 10.8 x LENGTH OF CIRCUIT TO FARTHEST DEVICE x CURRENT / WIRE SIZE IN C.M.
COMPUTED WITH TOTAL CURRENT ON CIRCUIT AT MAXIMUM LENGTH (CLASS A CIRCUIT).

NAC 'F3' VOLTAGE DROP CALCULATION

QTY.	DEVICE	DESCRIPTION	ALARM CURRENT/ DEVICE	TOTAL ALARM CURRENT
2	ELST-15	Strobe Wall, 24 VDC, Multi-Candela, 15 cd, red	0.0220	0.0440
4	ELSPST-15	Speaker Strobe Wall, 24 VDC, Multi-Candela, 15 cd, red	0.0220	0.0880
3	ELSPST-75	Speaker Strobe Wall, 24 VDC, Multi-Candela, 75 cd, red	0.0600	0.1800
3	ELSPST-110	Speaker Strobe Wall, 24 VDC, Multi-Candela, 110 cd, red	0.0860	0.2580
		No Device Selected	0.0000	0.0000
0		No Device Selected	0.0000	0.0000
0		No Device Selected	0.0000	0.0000
		TOTAL CURRENT ADDED TO CIRCUIT		0.570

LENGTH OF WIRE FROM FACP TO LAST DEVICE (IN FEET) =	**485**
ACTUAL SIZE OF WIRE INSTALLED = **12** AWG **6530** CIRCULAR MILS	
CALCULATED VOLTAGE DROP (IN VDC) =	**0.914**
CIRCUIT VOLTAGE CALCULATED AT LAST DEVICE (IN VDC) =	**23.1 VDC**
PERCENT VOLTAGE DROP (%) =	**3.81 %**

VOLTAGE DROP FORMULA:
VOLTAGE DROP = 2 X 10.8 x LENGTH OF CIRCUIT TO FARTHEST DEVICE x CURRENT / WIRE SIZE IN C.M.
COMPUTED WITH TOTAL CURRENT ON CIRCUIT AT MAXIMUM LENGTH (CLASS A CIRCUIT).

FOR BID ONLY

TETER, LLP expressly reserves its common law copyright and other property rights in these plans. This document, the ideas and designs incorporated herein, as an instrument of professional service, is not to be used in whole or in part, for any other project without prior written authorization.

MARK	DATE	DESCRIPTION
	11/1/22	DSA BACKCHECK

TETER, LLP
ARCHITECTS ENGINEERS CONNECTED
FRESNO HEADQUARTERS
VISALIA | BAKERSFIELD | MODESTO | SAN LUIS OBISPO

TULARE CAMPUS CTE
COLLEGE OF THE SEQUOIAS
4999 E. BARDSLEY AVE.
TULARE, CA

DRAWING TITLE
BATTERY AND VOLTAGE DROP CALCULATIONS

PROJECT NO.
21-12032

DRAWING
E711

PLOT DATE: 11/2/2022 9:56:02 AM

\\tet-file1\Users\corey.stone\Documents\12032-E-COS Tulare CTE_corey.stone.rvt

NAC 'E1' VOLTAGE DROP CALCULATION

QTY.	DEVICE	DESCRIPTION	ALARM CURRENT/ DEVICE	TOTAL ALARM CURRENT
2	ELSPST-15	Speaker Strobe Wall, 24 VDC, Multi-Candela, 15 cd, red	0.0220	0.0440
3	ELSPST-75	Speaker Strobe Wall, 24 VDC, Multi-Candela, 75 cd, red	0.0600	0.1800
2	ELSPST-110	Speaker Strobe Wall, 24 VDC, Multi-Candela, 110 cd, red	0.0860	0.1720
0		No Device Selected	0.0000	0.0000
0		No Device Selected	0.0000	0.0000
		TOTAL CURRENT ADDED TO CIRCUIT		0.396

LENGTH OF WIRE FROM FACP TO LAST DEVICE (IN FEET) = **215**
ACTUAL SIZE OF WIRE INSTALLED = **12** AWG **6530** CIRCULAR MILS
CALCULATED VOLTAGE DROP (IN VDC) = **0.282**

CIRCUIT VOLTAGE CALCULATED AT
LAST DEVICE (IN VDC) = **23.7 VDC**

PERCENT VOLTAGE DROP (%) = **1.17 %**

VOLTAGE DROP FORMULA:
VOLTAGE DROP = 2 X 10.8 x LENGTH OF CIRCUIT TO FARTHEST DEVICE x CURRENT
WIRE SIZE IN C.M.
COMPUTED WITH TOTAL CURRENT ON CIRCUIT AT MAXIMUM LENGTH (CLASS A CIRCUIT).

NAC 'E2' VOLTAGE DROP CALCULATION

QTY.	DEVICE	DESCRIPTION	ALARM CURRENT/ DEVICE	TOTAL ALARM CURRENT
1	ELST-75	Strobe Wall, 24 VDC, Multi-Candela, 75 cd, red	0.0600	0.0600
0		No Device Selected	0.0000	0.0000
2	ELSPST-15	Speaker Strobe Wall, 24 VDC, Multi-Candela, 15 cd, red	0.0220	0.0440
1	ELSPST-30	Speaker Strobe Wall, 24 VDC, Multi-Candela, 30 cd, red	0.0300	0.0300
1	ELSPST-75	Speaker Strobe Wall, 24 VDC, Multi-Candela, 75 cd, red	0.0600	0.0600
1	ELSPST-110	Speaker Strobe Wall, 24 VDC, Multi-Candela, 110 cd, red	0.0860	0.0860
0		No Device Selected	0.0000	0.0000
		TOTAL CURRENT ADDED TO CIRCUIT		0.194

LENGTH OF WIRE FROM FACP TO LAST DEVICE (IN FEET) = **170**
ACTUAL SIZE OF WIRE INSTALLED = **12** AWG **6530** CIRCULAR MILS
CALCULATED VOLTAGE DROP (IN VDC) = **0.109**

CIRCUIT VOLTAGE CALCULATED AT
LAST DEVICE (IN VDC) = **23.9 VDC**

PERCENT VOLTAGE DROP (%) = **0.45 %**

VOLTAGE DROP FORMULA:
VOLTAGE DROP = 2 X 10.8 x LENGTH OF CIRCUIT TO FARTHEST DEVICE x CURRENT
WIRE SIZE IN C.M.
COMPUTED WITH TOTAL CURRENT ON CIRCUIT AT MAXIMUM LENGTH (CLASS A CIRCUIT).

dB LINE LOSS CALCULATION - FACP-E

SPEAKER VOLTAGE = 25

SPEAKERS	DEVICE POWER (WATTS)	SIGNAL CKT S1 QTY.	SIGNAL CKT S1 WATTS	SIGNAL CKT S2 QTY.	SIGNAL CKT S2 WATTS	SIGNAL CKT S3 QTY.	SIGNAL CKT S3 WATTS	SPEAKER QTY TOTAL.	MIN. AMPLIFIER SIZE (WATTS)
SPEAKER - 1/4 WATT TAP	0.25	2	0.5	3	0.75	0	0	5	20.7
SPEAKER - 1/2 WATT TAP	0.5	1	0.5	1	0.5	0	0	2	
SPEAKER - 1 WATT TAP	1	0	0	1	1	0	0	1	
SPEAKER - 2 WATT TAP	2	4	8	0	0	3	6	7	
SPEAKER - 4 WATT TAP	4	0	0	0	0	0	0	0	
TOTAL POWER ON CKT (P) WATTS			9		2.25		6		
LOAD RESISTANCE (LR) OHMS			70		278		105		
TOTAL WIRE LENGTH (D) FT			205		125		370		
WIRE SIZE			14 AWG		14 AWG		14 AWG		
TOTAL WIRE RESISTANCE (WR) OHMS			1.3366		0.815		2.4124		
POWER LOSS (PL) dB			**-0.09**		**-0.02**		**-0.1**		

FORMULAS

WIRE RESISTANCE (R) (OHMS/KFT)*		
18 AWG	=	8.08
16 AWG	=	5.08
14 AWG	=	3.26
12 AWG	=	2.05

*VALUES PER NFPA 70

TOTAL WIRE RESISTANCE (WR) = (R / 1000) * D
LOAD RESISTANCE (LR) = (SPEAKER VOLTAGE)^2 / P
POWER LINE LOSS (PL) = 10 * LOG (1- (WR / (WR+LR)))

NAC 'D1' VOLTAGE DROP CALCULATION

QTY.	DEVICE	DESCRIPTION	ALARM CURRENT/ DEVICE	TOTAL ALARM CURRENT
1	ELST-110	Strobe Wall, 24 VDC, Multi-Candela, 110 cd, red	0.0860	0.0860
0		No Device Selected	0.0000	0.0000
3	ELSPST-15	Speaker Strobe Wall, 24 VDC, Multi-Candela, 15 cd, red	0.0220	0.0660
2	ELSPST-75	Speaker Strobe Wall, 24 VDC, Multi-Candela, 75 cd, red	0.0600	0.1200
1	ELSPST-110	Speaker Strobe Wall, 24 VDC, Multi-Candela, 110 cd, red	0.0860	0.0860
0		No Device Selected	0.0000	0.0000
0		No Device Selected	0.0000	0.0000
		TOTAL CURRENT ADDED TO CIRCUIT		0.358

LENGTH OF WIRE FROM FACP TO LAST DEVICE (IN FEET) = **210**
ACTUAL SIZE OF WIRE INSTALLED = **12** AWG **6530** CIRCULAR MILS
CALCULATED VOLTAGE DROP (IN VDC) = **0.249**

CIRCUIT VOLTAGE CALCULATED AT
LAST DEVICE (IN VDC) = **23.8 VDC**

PERCENT VOLTAGE DROP (%) = **1.04 %**

VOLTAGE DROP FORMULA:
VOLTAGE DROP = 2 X 10.8 x LENGTH OF CIRCUIT TO FARTHEST DEVICE x CURRENT
WIRE SIZE IN C.M.
COMPUTED WITH TOTAL CURRENT ON CIRCUIT AT MAXIMUM LENGTH (CLASS A CIRCUIT).

NAC 'D2' VOLTAGE DROP CALCULATION

QTY.	DEVICE	DESCRIPTION	ALARM CURRENT/ DEVICE	TOTAL ALARM CURRENT
1	ELST-110	Strobe Wall, 24 VDC, Multi-Candela, 110 cd, red	0.0860	0.0860
0		No Device Selected	0.0000	0.0000
5	ELSPST-15	Speaker Strobe Wall, 24 VDC, Multi-Candela, 15 cd, red	0.0220	0.1100
1	ELSPST-30	Speaker Strobe Wall, 24 VDC, Multi-Candela, 30 cd, red	0.0300	0.0300
1	ELSPST-110	Speaker Strobe Wall, 24 VDC, Multi-Candela, 110 cd, red	0.0860	0.0860
0		No Device Selected	0.0000	0.0000
0		No Device Selected	0.0000	0.0000
		TOTAL CURRENT ADDED TO CIRCUIT		0.312

LENGTH OF WIRE FROM FACP TO LAST DEVICE (IN FEET) = **305**
ACTUAL SIZE OF WIRE INSTALLED = **12** AWG **6530** CIRCULAR MILS
CALCULATED VOLTAGE DROP (IN VDC) = **0.315**

CIRCUIT VOLTAGE CALCULATED AT
LAST DEVICE (IN VDC) = **23.7 VDC**

PERCENT VOLTAGE DROP (%) = **1.31 %**

VOLTAGE DROP FORMULA:
VOLTAGE DROP = 2 X 10.8 x LENGTH OF CIRCUIT TO FARTHEST DEVICE x CURRENT
WIRE SIZE IN C.M.
COMPUTED WITH TOTAL CURRENT ON CIRCUIT AT MAXIMUM LENGTH (CLASS A CIRCUIT).

dB LINE LOSS CALCULATION - EVAC-D1

SPEAKER VOLTAGE = 25

SPEAKERS	DEVICE POWER (WATTS)	SIGNAL CKT S1 QTY.	SIGNAL CKT S1 WATTS	SIGNAL CKT S2 QTY.	SIGNAL CKT S2 WATTS	SIGNAL CKT S3 QTY.	SIGNAL CKT S3 WATTS	SPEAKER QTY TOTAL.	MIN. AMPLIFIER SIZE (WATTS)
SPEAKER - 1/4 WATT TAP	0.25	3	0.75	6	1.5	0	0	9	15.9
SPEAKER - 1/2 WATT TAP	0.5	2	1	0	0	0	0	2	
SPEAKER - 1 WATT TAP	1	1	1	1	1	0	0	2	
SPEAKER - 2 WATT TAP	2	0	0	0	0	4	8	4	
SPEAKER - 4 WATT TAP	4	0	0	0	0	0	0	0	
TOTAL POWER ON CKT (P) WATTS			2.75		2.5		8		
LOAD RESISTANCE (LR) OHMS			228		250		79		
TOTAL WIRE LENGTH (D) FT			180		305		700		
WIRE SIZE			14 AWG		14 AWG		14 AWG		
TOTAL WIRE RESISTANCE (WR) OHMS			1.1736		1.9886		4.564		
POWER LOSS (PL) dB			**-0.03**		**-0.04**		**-0.25**		

FORMULAS

WIRE RESISTANCE (R) (OHMS/KFT)*		
18 AWG	=	8.08
16 AWG	=	5.08
14 AWG	=	3.26
12 AWG	=	2.05

*VALUES PER NFPA 70

TOTAL WIRE RESISTANCE (WR) = (R / 1000) * D
LOAD RESISTANCE (LR) = (SPEAKER VOLTAGE)^2 / P
POWER LINE LOSS (PL) = 10 * LOG (1- (WR / (WR+LR)))

FOR BID ONLY

Teter, LLP expressly reserves its common law copyright and other property rights in these plans. This document, the ideas and designs incorporated herein, as an instrument of professional service, is not to be used in whole or part, for any other project without prior written authorization.

MARK	DATE	DESCRIPTION
	11/1/22	DSA BACKCHECK

TETER, LLP
FRESNO HEADQUARTERS
VISALIA | BAKERSFIELD | MODESTO | SAN LUIS OBISPO
ARCHITECTS ENGINEERS CONNECTED

TULARE CAMPUS CTE
COLLEGE OF THE SEQUOIAS
4999 E. BARDSLEY AVE.
TULARE, CA

DRAWING TITLE
BATTERY AND VOLTAGE DROP CALCULATIONS

PROJECT NO.
21-12032

DRAWING
E712

PLOT DATE: 11/2/2022 9:56:16 AM

\\tet-file1\Users\corey.stone\Documents\12032-E-COS Tulare CTE_corey.stone.rvt

CODES, RULES & REGULATIONS

ALL WORK SHOWN HEREIN SHALL COMPLY WITH THE CURRENT REGULATIONS OF THE CALIFORNIA STATE FIRE MARSHAL, CALIFORNIA BUILDING CODE, TITLES 8 AND 19 THROUGH 24, SERVING UTILITY RULES AND ALL OTHER APPLICABLE STATE ORDINANCES. NOTHING IN THESE PLANS OR SPECIFICATIONS SHALL BE INTERPRETED AS TO PERMIT ANY WORK NOT IN CONFORMANCE WITH THESE CODES, RULES AND REGULATIONS. WHERE WORK OF A GREATER DEGREE IS INDICATED IN THESE PLANS OR SPECIFICATIONS, THAT REQUIREMENT SHALL GOVERN SUCH WORK.

C.E.C. TITLE 24 COMPLIANCE

THE LIGHTING AND LIGHTING CONTROL SYSTEMS DESIGN DEPICTED HEREIN IS IN COMPLIANCE WITH REQUIREMENTS OF THE CURRENT CALIFORNIA ENERGY COMMISSION EFFICIENCY STANDARDS FOR NONRESIDENTIAL BUILDINGS.

GENERAL NOTES (TYPICAL)

1. REFER TO THE ARCHITECTURAL REFLECTED CEILING PLAN FOR THE EXACT LOCATION OF ALL CEILING MOUNTED ELECTRICAL EQUIPMENT.
2. REFER TO THE MECHANICAL AND PLUMBING PLANS FOR THE EXACT LOCATION OF ALL MECHANICAL, HVAC AND PLUMBING EQUIPMENT.
3. VERIFY THE EXACT LOCATION OF ALL FLOOR BOXES AND ASSOCIATED TRENCH, BACKFILL AND SAWCUTTING REQUIREMENTS WITH THE ARCHITECT PRIOR TO COMMENCEMENT OF ANY ROUGH -IN WORK FOR THIS EQUIPMENT.
4. COORDINATE ELECTRICAL PANEL AND TERMINAL CABINET LOCATIONS AND ROUTING OF UNDERGROUND CONDUITS WITH THE ARCHITECTURAL AND STRUCTURAL DRAWINGS PRIOR TO COMMENCEMENT OF ANY ROUGH-IN WORK FOR THIS EQUIPMENT.
5. COORDINATE ALL ELECTRICAL WORK WITH OTHER TRADES WHOSE WORK WILL IMPACT PLACEMENT OR CONNECTION OF ELECTRICALLY POWERED EQUIPMENT REGARDLESS OF RESPONSIBILITY FOR SUPPLYING EQUIPMENT.

MEP COMPONENT ANCHORAGE NOTE

ALL MECHANICAL, PLUMBING, AND ELECTRICAL COMPONENTS SHALL BE ANCHORED AND INSTALLED PER THE DETAILS ON THE DSA APPROVED CONSTRUCTION DOCUMENTS. THE FOLLOWING COMPONENTS SHALL BE ANCHORED OR BRACED TO MEET THE FORCE AND DISPLACEMENT REQUIREMENTS PRESCRIBED IN THE 2019 CBC, SECTIONS 1617A.1.18 THROUGH 1617A.1.26 AND ASCE 7-16 CHAPTERS 13, 26 AND 30.

1. ALL PERMANENT EQUIPMENT AND COMPONENTS.
2. TEMPORARY, MOVEABLE OR MOBILE EQUIPMENT THAT IS PERMANENTLY ATTACHED (E.G. HARD WIRED) TO THE BUILDING UTILITY SERVICES SUCH AS ELECTRICITY, GAS OR WATER. "PERMANENTLY ATTACHED" SHALL INCLUDE ALL ELECTRICAL CONNECTIONS EXCEPT PLUGS FOR 110/220 VOLT RECEPTACLES HAVING FLEXIBLE CABLE.
3. TEMPORARY, MOVABLE OR MOBILE EQUIPMENT EQUIPMENT WHICH IS HEAVIER THAN 400 POUNDS OR HAS A CENTER OF MASS LOCATED 4 FEET OR MORE ABOVE THE ADJACENT FLOOR OR ROOF LEVEL THAT DIRECTLY SUPPORT THE COMPONENT IS REQUIRED TO BE RESTRAINED IN A MANNER APPROVED BY DSA.

THE FOLLOWING MECHANICAL AND ELECTRICAL COMPONENTS SHALL BE POSITIVELY ATTACHED TO THE STRUCTURE BUT NEED NOT DEMONSTRATE DESIGN COMPLIANCE WITH THE REFERENCES NOTED ABOVE. THESE COMPONENTS SHALL HAVE FLEXIBLE CONNECTIONS PROVIDED BETWEEN THE COMPONENT AND ASSOCIATED DUCTWORK, PIPING, AND CONDUIT. FLEXIBLE CONNECTIONS MUST ALLOW MOVEMENT IN BOTH TRANSVERSE AND LONGITUDINAL DIRECTIONS:

A. COMPONENTS WEIGHING LESS THAN 400 POUNDS AND HAVE A CENTER OF MASS LOCATED 4 FEET OR LESS ABOVE THE ADJACENT FLOOR OR ROOF LEVEL THAT DIRECTLY SUPPORT THE COMPONENT.

B. COMPONENTS WEIGHING LESS THAN 20 POUNDS, OR IN THE CASE OF DISTRIBUTED SYSTEMS, LESS THAN 5 POUNDS PER FOOT, WHICH ARE SUSPENDED FROM A ROOF OR FLOOR OR HUNG FROM A WALL.

THE ANCHORAGE OF ALL MECHANICAL, ELECTRICAL AND PLUMBING COMPONENTS SHALL BE SUBJECT TO THE APPROVAL OF THE DESIGN PROFESSIONAL IN GENERAL RESPONSIBLE CHARGE OR STRUCTURAL ENGINEER DELEGATED RESPONSIBILITY AND ACCEPTANCE BY DSA. THE PROJECT INSPECTOR WILL VERIFY THAT ALL COMPONENTS AND EQUIPMENT HAVE BEEN ANCHORED IN ACCORDANCE WITH THE ABOVE REQUIREMENTS.

PIPING, DUCTWORK, AND ELECTRICAL DISTRIBUTION SYSTEM BRACING NOTE:

PIPING, DUCTWORK, AND ELECTRICAL DISTRIBUTION SYSTEMS SHALL BE BRACED TO COMPLY WITH THE FORCES AND DISPLACEMENTS PRESCRIBED IN ASCE 7-16 SECTION 13.3 AS DEFINED IN ASCE 7-16 SECTION 13.6.5, 13.6.6, 13.6.7, 13.6.8; AND 2019 CBC, SECTIONS 1617A.1.24, 1617A.1.25, AND 1617A.1.26.

THE METHOD OF SHOWING BRACING AND ATTACHMENTS TO THE STRUCTURE FOR THE IDENTIFIED DISTRIBUTION SYSTEM ARE AS NOTED BELOW. WHEN BRACING AND ATTACHMENTS ARE BASED ON A PREAPPROVED INSTALLATION GUIDE (E.G., OSHPD OPM FOR 2013 CBC OR LATER), COPIES OF THE BRACING SYSTEM INSTALLATION GUIDE OR MANUAL SHALL BE AVAILABLE ON THE JOBSITE PRIOR TO THE START OF AND DURING THE HANGING AND BRACING OF THE DISTRIBUTION SYSTEMS. THE STRUCTURAL ENGINEER OF RECORD SHALL VERIFY THE ADEQUACY OF THE STRUCTURE TO SUPPORT THE HANGER AND BRACE LOADS.

ELECTRICAL DISTRIBUTION SYSTEMS:

SHALL COMPLY WITH THE APPLICABLE OSHPD PRE-APPROVAL (OPM#) #OPM-0052-13, "SEISMIC BRACING AND SUPPORT SYSTEMS"

GENERAL NOTES N.T.S.

LIGHTING FIXTURE SCHEDULE

FIXTURE DESIGNATION	FIXTURE VOLTAGE	FIXTURE WATTAGE	MOUNTING	DRIVER & COLOR TEMP	DESCRIPTION	MANUFACTURER	CATALOG #
B1	277 V	25	SURFACE PER 9/E601 OR 14/E601	4000K 80CRI	SURFACE MOUNTED STRIP LED FIXTURE	LITHONIA	ZL1N-L48-3000LM-FST-MVOLT-40K-80CRI
B1E	277 V	25	SURFACE PER 9/E601 OR 14/E601	4000K 80CRI	SURFACE MOUNTED STRIP LED FIXTURE	LITHONIA	ZL1N-L48-3000LM-FST-MVOLT-40K-80CRI-E10WLCP
B2	277 V	34	SURFACE PER 8/E601	4000K 80CRI	SURFACE MOUNTED STRIP LED FIXTURE	LITHONIA	ZL1N-L48-5000LM-FST-MVOLT-40K-80CRI
B2E	277 V	34	SURFACE PER 8/E601	4000K 80CRI	SURFACE MOUNTED STRIP LED FIXTURE	LITHONIA	ZL1N-L48-5000LM-FST-MVOLT-40K-80CRI
B3	277 V	25	SUSPENDED PER 19/E601 OR 24/E601	4000K 80CRI	SUSPENDED CHAIN MOUNTED STRIP LED FIXTURE	LITHONIA	ZL1N-L48-3000LM-FST-MVOLT-40K-80CRI-LBOZU
B3E	277 V	25	SUSPENDED PER 19/E601 OR 24/E601	4000K 80CRI	SUSPENDED CHAIN MOUNTED STRIP LED FIXTURE WITH INTEGRAL BATTERY BACKUP	LITHONIA	ZL1N-L48-3000LM-FST-MVOLT-40K-80CRI-E10WLCP-LBOZU
C1	277 V	10	RECESSED PER 15/E601	4000K 80CRI	6" RECESSED CAN LIGHT	GOTHAM	EVO6 40/10 AR WD LS MVOLT EZ10
C1E	277 V	10	RECESSED PER 15/E601	4000K 80CRI	6" RECESSED CAN LIGHT	GOTHAM	EVO6 40/10 AR WD LS MVOLT EZ10 E10WCP
C2	277 V	15	RECESSED PER 10/E601	4000K 80CRI	6" RECESSED CAN LIGHT	GOTHAM	EVO6LW 40/15 AR LS MVOLT EZ1
C2E	277 V	15	RECESSED PER 10/E601	4000K 80CRI	6" RECESSED CAN LIGHT WITH INTEGRAL EMERGENCY BATTERY BACKUP	GOTHAM	EVO6LW 40/15 AR LS MVOLT EZ1 E10WCPR
C3	277 V	15	RECESSED PER 15/E601	4000K 80CRI	6" RECESSED CAN LIGHT	GOTHAM	EVO6 40/15 AR WD LS MVOLT EZ10
C3E	277 V	15	RECESSED PER 15/E601	4000K 80CRI	6" RECESSED CAN LIGHT WITH INTEGRAL EMERGENCY BATTERY BACKUP	GOTHAM	EVO6 40/15 AR WD LS MVOLT EZ10 E10WCP
DP1	277 V	153	PENDANT PER 5/E601	4000K 80CRI	DECORATIVE PENDANT - CONCENTRIC CIRCLES 5' AND 4'	DELRAY	BG6754-S-LO-W40-CR-D
G1	277 V	46	IN-GRADE PER 3/E601	4000K 80CRI	IN-GRADE LED COLUMN UPLIGHT	HYDREL	M9720C-SS-P3-40K-MVOLT-NFL-FLCSR-34B-GR
L1	277 V	34	SUSPENDED PER 18/E601	4000K 80CRI	48" LINEAR CABLE SUSPENDED LED FIXTURE	LITHONIA	ZL1N-L48-5000LM-FST-MVOLT-40K-80CRI-ZACVHM100
L1E	277 V	34	SUSPENDED PER 18/E601	4000K 80CRI	48" LINEAR CABLE SUSPENDED LED FIXTURE - WITH EMERGENCY BATTERY BACKUP	LITHONIA	ZL1N-L48-5000LM-FST-MVOLT-40K-80CRI-E10WLCP
L2	277 V	24	RECESSED PER 6/E601	4000K 80CRI	4' RECESSED LINEAR FIXTURE	MARK ARCHITECTURAL LIGHTING	SL4L-4FT-FLP-GB-80CRI-40K-600LMF-MIN1-277-2T
L2E	277 V	24	RECESSED PER 6/E601	4000K 80CRI	4' RECESSED LINEAR FIXTURE WITH INTEGRAL EMERGENCY BATTERY BACKUP	MARK ARCHITECTURAL LIGHTING	SL4L-4FT-FLP-GB-80CRI-40K-600LMF-MIN1-277-1E10WLCP-ZT
L3	277 V	24	SUSPENDED PER 18/E601	4000K 80CRI	4' DIRECT PENDANT LINEAR FIXTURE	MARK ARCHITECTURAL LIGHTING	S4LD-LLP- FT-MSL4-80CRI-40K-600LMF-MIN1-MVOLT-*-ZT-F2/144A *=VERIFY FIXTURE FINISH WITH PROJECT ARCHITECT
L3E	277 V	24	SUSPENDED PER 18/E601	4000K 80CRI	4' EMERGENCY DIRECT PENDANT LINEAR FIXTURE	MARK ARCHITECTURAL LIGHTING	S4LD-LLP- FT-MSL4-80CRI-40K-600LMF-MIN1-MVOLT-*-E10WLCP-ZT-F2/144A *=VERIFY FIXTURE FINISH WITH PROJECT ARCHITECT
L4	277 V	24	RECESSED PER 13/E601	4000K 80CRI	4' RECESSED LINEAR FIXTURE MOUNTED IN T-BAR	MARK ARCHITECTURAL LIGHTING	SL4L-4FT-FLP-TG-80CRI-40K-600LMF-MIN1-277-2T
L4E	277 V	24	RECESSED PER 13/E601	4000K 80CRI	4' RECESSED LINEAR FIXTURE MOUNTED IN T-BAR WITH INTEGRAL EMERGENCY BATTERY BACKUP	MARK ARCHITECTURAL LIGHTING	SL4L-4FT-FLP-TG-80CRI-40K-600LMF-MIN1-277-1E10WLCP-ZT
L5	277 V	32	RECESSED PER 13/E601	4000K 80CRI	4' RECESSED LINEAR FIXTURE MOUNTED IN T-BAR	MARK ARCHITECTURAL LIGHTING	SL4L-4FT-FLP-TG-80CRI-40K-800LMF-MIN1-277-2T
L5E	277 V	32	RECESSED PER 13/E601	4000K 80CRI	4' RECESSED LINEAR FIXTURE MOUNTED IN T-BAR WITH INTEGRAL EMERGENCY BATTERY BACKUP	MARK ARCHITECTURAL LIGHTING	SL4L-4FT-FLP-TG-80CRI-40K-800LMF-MIN1-277-1E10WLCP-ZT
L6	277 V	11	SUSPENDED PER 18/E601	4000K 80CRI	48" CABLE SUSPENDED LED FIXTURE	LITHONIA	BLWP4-15L-ADP-EZ1-LP840-BLWPCG72F1
L8	277 V	40	SUSPENDED PER 18/E601	4000K 80CRI	4' PENDANT MOUNTED DIRECT AND INDIRECT LINEAR FIXTURE	MARK ARCHITECTURAL LIGHTING	S4LID-LLP- FT-MSL4-80CRI-40K-600LMF-I80CRI-I40K-I600LMF-MIN1-SCT-MVOLT-*-ZT *=VERIFY FIXTURE FINISH WITH PROJECT ARCHITECT
L8E	277 V	40	SUSPENDED PER 18/E601	4000K 80CRI	4' PENDANT MOUNTED DIRECT AND INDIRECT LINEAR FIXTURE WITH EMERGENCY BATTERY BACKUP	MARK ARCHITECTURAL LIGHTING	S4LID-LLP- FT-MSL4-80CRI-40K-600LMF-I80CRI-I40K-I600LMF-MIN1-SCT-MVOLT-*-E10WLCP-ZT *=VERIFY FIXTURE FINISH WITH PROJECT ARCHITECT
L9	277 V	32	SUSPENDED PER 18/E601	4000K 80CRI	4' PENDANT MOUNTED DIRECT AND INDIRECT LINEAR FIXTURE	MARK ARCHITECTURAL LIGHTING	S4LID-LLP- FT-MSL4-80CRI-40K-400LMF-I80CRI-I40K-I600LMF-MIN1-SCT-MVOLT-*-ZT *=VERIFY FIXTURE FINISH WITH PROJECT ARCHITECT
L9E	277 V	32	SUSPENDED PER 18/E601	4000K 80CRI	4' PENDANT MOUNTED DIRECT AND INDIRECT LINEAR FIXTURE WITH EMERGENCY BATTERY BACKUP	MARK ARCHITECTURAL LIGHTING	S4LID-LLP- FT-MSL4-80CRI-40K-400LMF-I80CRI-I40K-I600LMF-MIN1-SCT-MVOLT-*-E10WLCP-ZT *=VERIFY FIXTURE FINISH WITH PROJECT ARCHITECT
P1	277 V	15	SURFACE PER 18/E601	4000K 80CRI	6" PENDANT STEM CYLINDER	GOTHAM	EVO6PCLW 40/15 AR LS MVOLT EZ1 JBX S8 - VERIFY FIXTURE FINISH WITH PROJECT ARCHITECT
P1E	277 V	15	SURFACE PER 18/E601	4000K 80CRI	6" PENDANT STEM CYLINDER WITH INTEGRAL EMERGENCY BATTERY BACKUP	GOTHAM	EVO6PCLW 40/15 AR LS MVOLT EZ1 JBX S8 E10WCPR - VERIFY FIXTURE FINISH WITH PROJECT ARCHITECT
S1	277 V	163	POLE PER 2/E601	4000K 80CRI	25' SINGLE HEAD POLE LIGHT	LITHONIA	FIXTURE: DSX1 LED-P6-40K-T2M-MVOLT-SPA-DDBXD POLE: SSS-QS-25-4G-DM19AS-DDBXD
S2	277 V	652	POLE PER 1/E601	4000K 80CRI	25' QUAD-HEAD POLE LIGHT	LITHONIA	FIXTURE: DSX1 LED-P6-40K-TFTMMVOLT-SPA-DDBXD POLE: SSS-QS-25-4G-DM49AS-DDBXD
T1	277 V	79	SURFACE PER 7/E601	LED - RGB	17' 8" OUTDOOR RATED RGB TAPE LIGHTING AND REMOTE POWER SUPPLY	TIVOLI	TPL-RGB-M-O-24-XEP LENGTH=17' 8" LEAD LENGTH=20'
V1	277 V	18	SURFACE PER 4/E601	4000K 80CRI	1x4 SURFACE MOUNTED LOW PROFILE VAPOR TIGHT LED FIXTURE	LITHONIA	FEM-L48-3000LM-LPAFL-WD-MVOLT-40K-80CRI
W1	277 V	31	WALL PER PLAN	4000K 80CRI	ARCHITECTURAL WALLPACK	LUMINIS	SY602-L2L15-R30-277V-*-REML2-50 *=VERIFY FIXTURE FINISH WITH ARCHITECT
W1E	277 V	31	WALL PER PLAN	4000K 80CRI	ARCHITECTURAL WALLPACK	LUMINIS	SY602-L2L15-R30-277V-*-REML2-50 *=VERIFY FIXTURE FINISH WITH ARCHITECT
W2	277 V	77	WALL PER PLAN	4000K 80CRI	ARCHITECTURAL WALLPACK	LITHONIA	WDGE4-P1-40K-80CRI-RFT-MVOLT-SRM-AWS-PIR-* *=VERIFY FIXTURE FINISH WITH PROJECT ARCHITECT
W3	277 V	35	WALL PER PLAN	4000K 80CRI	ARCHITECTURAL WALLPACK	LITHONIA	WDGE2-P4-40K-80CRI-VW-MVOLT-SRM-AWS-PIR-* *=VERIFY FIXTURE FINISH WITH PROJECT ARCHITECT
W3E	277 V	35	WALL PER PLAN	4000K 80CRI	ARCHITECTURAL WALLPACK WITH INTEGGRAL EMERGHENCY BATTERY BACKUP	LITHONIA	WDGE2-P4-40K-80CRI-VW-MVOLT-SRM-AWS-E20WH-PIR-* *=VERIFY FIXTURE FINISH WITH PROJECT ARCHITECT
W4	277 V	13	WALL PER PLAN	4000K 80CRI	36" LONG BATHROOM WALL SCONCE	HEALTHCARE LIGHTING	HPST-36LONG-277-40K-MIN1-* *=REFER TO ARCHITECHT FOR FINISH SELECTION
X1	277 V	2	WALL PER PLAN	LED	SINGLE FACE ILLUMINATED EXIT SIGN WITH BATTERY BACKUP (5 LBS.)	LITHONIA	LE-S-1-*-EL N-SD *VERIFY LETTER COLOR WITH AHJ

LIGHTING FIXTURE SCHEDULE N.T.S. 3

TELECOMMUNICATION CABLE SCHEDULE

CABLE DESIGNATION	DESCRIPTION	MANUFACTURER & CATALOG #	OUTER JACKET COLOR	SYSTEM	USE
'D'	4 UTP #23 AWG CATEGORY 6 CMP PLENUM RATED	BERK-TEK LANMARK-1000	BLUE	DATA	HORIZONTAL DATA CABLE - INTERIOR
'DX'	4 UTP #24 AWG CATEGORY 6 FILLED OUTDOOR	COMMSCOPE MEDIA 6 #6NF4+	BLACK	DATA	HORIZONTAL DATA CABLE - OUTDOOR
'FO'	12-STRAND SINGLE-MODE FIBER OPTIC CABLE	CORNING SMF-28e+ OR EQUIVALENT	BLACK	DATA	SITE OPTICAL FIBER DATA NETWORK

TELECOMMUNICATION CABLE SCHEDULE N.T.S. 4

TRANSFORMER SCHEDULE

TRANSFORMER DESIGNATION	PRIMARY VOLTAGE	SECONDARY VOLTAGE	KVA RATING	SUPPLY-SIDE & SYSTEM BONDING JUMPER SIZES	ENCLOSURE	DIMENSIONS HEIGHT	DIMENSIONS WIDTH	DIMENSIONS DEPTH	XFMR WEIGHT	REMARKS
TMV-5	12kV DELTA	277/480V Y 3ϕ	1500	400 KCMIL CU	NEMA 3R	73.00"	89.00"	86.00"	10,300 LBS.	(2)
TBDF	480V DELTA	240V DELTA 3ϕ	112.5	#1/0 CU	NEMA 1	46.00"	31.31"	24.00"	950 LBS.	(1) (4) (6)
TDRD	480V DELTA	120/208V Y 3ϕ	150	#3/0 CU	NEMA 1	49.08"	33.65"	28.45"	1,192 LBS.	(1) (3) (5)
TDRE	480V DELTA	120/208V Y 3ϕ	150	#3/0 CU	NEMA 1	49.08"	33.65"	28.45"	1,192 LBS.	(1) (3) (5)
TDRF	480V DELTA	120/208V Y 3ϕ	300	#3/0 CU	NEMA 1	57.50"	40.07"	32.75"	2,091 LBS.	(1) (3) (5)
TE1E	480V DELTA	240V DELTA 3ϕ	75	#2 CU	NEMA 1	42.00"	30.06"	22.75"	710 LBS.	(1) (4) (6)
TE1F	480V DELTA	240V DELTA 3ϕ	112.5	#1/0 CU	NEMA 1	46.00"	31.31"	24.00"	950 LBS.	(1) (4) (6)
TE2E	480V DELTA	240V DELTA 3ϕ	75	#2 CU	NEMA 1	42.00"	30.06"	22.75"	710 LBS.	(1) (4) (6)
TE3F	480V DELTA	240V DELTA 3ϕ	75	#2 CU	NEMA 1	42.00"	30.06"	22.75"	710 LBS.	(1) (4) (6)
TE4F	480V DELTA	240V DELTA 3ϕ	75	#2 CU	NEMA 1	42.00"	30.06"	22.75"	710 LBS.	(1) (4) (6)
TE5F	480V DELTA	240V DELTA 3ϕ	112.5	#1/0 CU	NEMA 1	46.00"	31.31"	24.00"	950 LBS.	(1) (4) (6)
TED	480V DELTA	240V DELTA 3ϕ	150	#3/0 CU	NEMA 1	49.08"	33.65"	28.45"	1,192 LBS.	(1) (4) (5)
TEY	480V DELTA	120/208V Y 3ϕ	45	#4 CU	NEMA 3R	35.32"	25.52"	21.00"	507 LBS.	(1) (3) (5)

TRANSFORMER SCHEDULE NOTES:

(1) TRANSFORMER SHALL BE COMPLIANT WITH DOE 2016 ENERGY EFFICIENCY STANDARD.
(2) TRANSFORMER GROUND AND MOUNTING PER DETAIL 2/E600.
(3) TRANSFORMER GROUND PER DETAIL 4/E600.
(4) TRANSFORMER GROUND PER DETAIL 25/E600
(5) TRANSFORMER FLOOR MOUNTING PER 3/E600
(6) TRANSFORMER WALL MOUNTING PER 8/E600

TRANSFORMER SCHEDULE N.T.S. 1

ELECTRICAL SYMBOL LEGEND

DIMENSIONS INDICATED ARE MEASURED TO CENTERLINE OF ENCLOSURE, UNLESS OTHERWISE NOTED
NOTE: SOME SYMBOLS SHOWN MAY NOT APPLY TO THIS PROJECT

SYMBOL	DESCRIPTION
E.P.	DENOTES EXPLOSION PROOF CONSTRUCTION
D.T.	DENOTES DUST TIGHT CONSTRUCTION
O.C.	DENOTES SPACING DIMENSION ON CENTER LINE OF DEVICE
R.T.	DENOTES RAIN TIGHT CONSTRUCTION
C.O.	DENOTES CONDUIT ONLY
U.G.	DENOTES UNDERGROUND INSTALLATION
V.P.	DENOTES VAPOR TIGHT CONSTRUCTION
W.P.	DENOTES WEATHERPROOF CONSTRUCTION
W.T.	DENOTES WATER TIGHT CONSTRUCTION
A.F.F.	DENOTES ABOVE FINISHED FLOOR
A.F.G.	DENOTES ABOVE FINISHED GRADE
F.B.O.	DENOTES FURNISHED BY OTHERS
U.O.N.	DENOTES UNLESS OTHERWISE NOTED
(E)	DENOTES EXISTING TO REMAIN, NO WORK U.O.N.
(N)	DENOTES NEW
(1)	ELECTRICAL KEYNOTES: DENOTES KEYNOTE #1 OF NOTES ON SAME SHEET
A-3	CIRCUIT HOME RUN: DENOTES PANEL A, CKT. #3, - 3/4"C. MINIMUM, U.O.N.
F1	CIRCUIT FEEDER: DENOTES FEEDER 'F1' PER SYSTEM FEEDER SCHEDULE
	CONDUIT IN ATTIC/WALL: DENOTES 3/4"C-2#12 AWG CU THWN, 1#12 CU GND, U.O.N.
	CONDUIT IN FLOOR/U.G.: DENOTES 3/4"C-2#12 AWG CU THWN, 1#12 CU GND, U.O.N.
	DENOTES EXISTING CONDUIT RUN TO REMAIN
	CONDUIT RUN - STUBBED, CAPPED AND LABELED.
	CONDUIT RUN: DENOTES 3/4"C - 3-#12 AWG CU THWN + 1 #12 CU GND, U.O.N.
	CONDUIT RUN: DENOTES 3/4"C - 4-#12 AWG CU THWN + 1 #12 CU GND, U.O.N.
	CONDUIT RUN: DENOTES 3/4"C - 5-#12 AWG CU THWN + 1 #12 CU GND, U.O.N.
	CONDUIT RUN: DENOTES 1"C - 6-#12 AWG CU THWN + 1 #12 CU GND, U.O.N.
	TAMPER-RESISTANT SINGLE RECEPTACLE IN WALL @ +18", U.O.N.
	TAMPER-RESISTANT DUPLEX RECEPTACLE IN WALL @ +18", U.O.N.
	TAMPER-RESISTANT DUPLEX GFI RECEPTACLE, IN WALL @ +18", U.O.N.
	TAMPER-RESISTANT DOUBLE-DUPLEX GFI RECEPTACLE, IN WALL @ +18", U.O.N.
	TAMPER-RESISTANT SWITCHED GFCI RECEPTACLE IN WALL @ +18" A.F.F. U.O.N. (OCC. SENSOR OR WALL SWITCH CONTOLLED)
WP	TAMPER-RESISTANT WEATHER RESISTANT (W/R) DUPLEX GFCI RECEPTACLE W/ W.P. COVER @ +18", U.O.N.
	TAMPER-RESISTANT DUPLEX ISOLATED GROUND RECEPTACLE IN WALL @ +18", U.O.N. (7)
	TAMPER-RESISTANT QUADRUPLEX RECEPTACLE IN WALL @ +18", U.O.N.
	SPECIAL PURPOSE ELECTRICAL OUTLET PER PLAN IN WALL @ +18" U.O.N.
	DUPLEX RECEPTACLE FLUSH IN CEILING
	TAMPER-RESISTANT QUADRUPLEX RECEPTACLE IN WALL @ +18" A.F.F., U.O.N. ONE UNSWITCHED RECEPTACLE AND ONE SWITCHED (OCC. SENSOR CONTROLLED) RECEPTACLE
	JUNCTION BOX
	JUNCTION BOX WITH FLEXIBLE CONDUIT CONNECTION TO EQUIPMENT
	NON-FUSIBLE DISCONNECT SWITCH
	FUSIBLE DISCONNECT SWITCH
	FUSIBLE DISCONNECT SWITCH WITH INTEGRAL MAGNETIC STARTER
	ELECTRIC MOTOR
	EXHAUST FAN OR FRACTIONAL HORSEPOWER MOTOR
	SURFACE MOUNTED RACEWAY, MOUNT @ +18" A.F.F. U.ON.
	RECESSED LED LIGHTING FIXTURE
	RECESSED LED LIGHTING FIXTURE WITH EMERGENCY BATTERY BACKUP
	SURFACE MOUNTED LED LIGHTING FIXTURE
	SURFACE MOUNTED LED LIGHTING FIXTURE WITH EMERGENCY BATTERY BACKUP
	SURFACE MOUNTED LED STRIP LIGHT
	SURFACE MOUNTED LED STRIP LIGHT WITH EMERGENCY BATTERY BACKUP
	POST TOP MOUNTED LIGHTING FIXTURE
	WALL MOUNTED LIGHTING FIXTURE
	WALL MOUNTED LIGHTING FIXTURE WITH EMERGENCY BATTERY BACKUP
	CEILING MOUNTED LIGHTING FIXTURE
	CEILING MOUNTED LIGHTING FIXTURE WITH EMERGENCY BATTERY BACKUP
	RECESSED LIGHTING FIXTURE
	RECESSED FIXTURE WITH EMERGENCY BATTERY BACKUP
	SURFACE MOUNTED ROUND LIGHTING FIXTURE
	SURFACE MOUNTED ROUND LIGHTING FIXTURE WITH EMERGENCY BATTERY BACKUP
	ILLUMINATED EXIT SIGN MOUNTED ON CEILING
	ILLUMINATED EXIT SIGN MOUNTED ON WALL
	LOW LEVEL PHOTOLUMINESCENT EXIT SIGN MOUNTED ON WALL
	POLE MOUNTED EXTERIOR LIGHTING FIXTURE
X	DATA OUTLET IN WALL, WITH 'D' CABLES TO IDF OR MDF (SUBSCRIPT INDICATES QUANTITY OF CABLES AND STATION SIDE JACKS) (1) (6)
X	DATA OUTLET IN CEILING, WITH 'D' CABLES TO IDF OR MDF (SUBSCRIPT INDICATES QUANTITY OF CABLES AND STATION SIDE JACKS) (6) (8)
A/V	AUDIO VISUAL OUTLET IN CEILING (6)
A/V	AUDIO VISUAL OUTLET IN WALL @ +18", U.O.N. (1) (3) (6)
S	SPEAKER OUTLET IN WALL @ +18", U.O.N. (1)
IC	INTERCOMMUNICATIONS HANDSET ON WALL @ +48" TO TOP OF BOX U.O.N.
WAP	WIRELESS ACCESS POINT LOCATION, PROVIDE TWO TYPE 'D' CABLES TO IDF OR MDF (6) (8)
$_3$	SINGLE POLE AC SNAP SWITCH @ +48" TO TOP OF BOX, U.O.N. — LOWER CASE SUBSCRIPT INDICATES CONTROLLED SWITCHLEG OF CIRCUIT
$_2$	TWO POLE AC SNAP SWITCH @ +48" TO TOP OF BOX, U.O.N.
$_3$	THREE WAY AC SNAP SWITCH @ +48" TO TOP OF BOX, U.O.N.
$_4$	FOUR WAY AC SNAP SWITCH @ +48" TO TOP OF BOX, U.O.N.
$_M$	HORSEPOWER RATED AC SNAP SWITCH @ +48" TO TOP OF BOX U.O.N.
$_P$	SINGLE POLE AC SNAP SWITCH WITH PILOT LAMP @ +48" TO TOP OF BOX U.O.N.
$_T$	DIGITAL TIMER SWITCH, FLUSH MOUNTED @ +48" TO TOP OF BOX U.O.N.
$_A$	SINGLE POLE AC SNAP SWITCH @ +48" TO TOP OF BOX, U.O.N.
$_K$	KEY OPERATED AC SNAP SWITCH @ +48" TO TOP OF BOX U.O.N.
$_{CS}$	SYSTEM CONTROL SWITCH PER PLANS, @ 48" TO TOP OF BOX U.O.N.
	WALL SWITCH WITH INTEGRAL OCCUPANCY SENSOR @ +48" TO TOP OF BOX, U.O.N.
M	OCCUPANCY SENSOR - CEILING MOUNTED
MW	OCCUPANCY SENSOR - WALL MOUNTED @ +90" TO TOP OF BOX, U.O.N.
P	LIGHTING CONTROL SYSTEM DIMMING/POWER PACK MOUNTED IN ATTIC
RP	LIGHTING CONTROL SYSTEM PLUG LOAD RELAY PACK MOUNTED IN ATTIC
C1	LIGHTING CONTROL SYSTEM 2-BUTTON DIMMING WALL SWITCH @ +48" TO TOP OF BOX, U.O.N.
2A	LIGHTING CONTROL SYSTEM 4-BUTTON DIMMING WALL SWITCH @ +48" TO TOP OF BOX, U.O.N.
CL	LIGHTING CONTROL SYSTEM DIMMING WALL SWITCH WITH LOCKING COVER @ +48" TO TOP OF BOX, U.O.N.
DS	LIGHTING CONTROL SYSTEM DAYLIGHT SENSOR - CEILING MOUNTED
NB	LIGHTING CONTROL SYSTEM NETWORK BRIDGE
NG	LIGHTING CONTROL SYSTEM NETWORK GATEWAY
AD	LIGHTING CONTROL SYSTEM AUTOMATED DEMAND RESPONSE MODULE
TC	LIGHTING CONTROL SYSTEM TIME CLOCK
PC	PHOTOCELL CONTROL MOUNTED ON ROOF
	FLUSH FLOOR BOX WITH CABLE PASS THRU LID INSTALLED PER PLANS (2)
	FLUSH FLOOR BOX WITH SPECIAL PURPOSE RECEPTACLE INSTALLED PER PLANS (2)
	SEPARATE POWER AND DATA FLOOR BOXES (2)
	FLUSH FLOOR BOX WITH DEVICE(S) INSTALLED PER PLANS, U.O.N. (2)
	ELECTRICAL PANELBOARD PER PLANS, FLUSH MOUNTED IN WALL (4)
	ELECTRICAL PANELBOARD PER PLANS, SURFACE MOUNTED ON WALL
	TERMINAL CABINET PER PLANS, FLUSH MOUNTED IN WALL (5)
	TERMINAL CABINET PER PLANS, SURFACE MOUNTED ON WALL
	CONTROL PANEL PER PLANS, FLUSH MOUNTED IN WALL (5)
	CONTROL PANEL PER PLANS, SURFACE MOUNTED ON WALL
	LIGHTING CONTROL PANEL PER PLANS, FLUSH MOUNTED IN WALL (5)
	LIGHTING CONTROL PANEL PER PLANS, SURFACE MOUNTED ON WALL
	FIRE ALARM PANEL PER PLANS, FLUSH MOUNTED IN WALL (5)
	FIRE ALARM PANEL PER PLANS, SURFACE MOUNTED ON WALL
S	EXTERIOR SPEAKER, ELEVATION AS NOTED
S

\\tet-file1\Users\corey.stone\Documents\12032-E-COS Tulare CTE_corey.stone.rvt

Specialty Equipment Schedule

EQUIPMENT ID	ROOM NUMBER - NAME	EQUIPMENT DESCRIPTION	EQUIPMENT VOLTAGE	EQUIPMENT PHASE	EQUIPMENT CURRENT	EQUIPMENT RECEPTACLE TYPE
EQ001		ELECTRIC PRESSURE WASHER	208 V	3ϕ	25 A	N/A
EQ114		PARTS WASHER	208 V	1ϕ	24 A	NEMA L6-30R
EQ115		MIG WELDER	240 V	1ϕ	51 A	NEMA 6-50R
EQ308		MIG WELDER	240 V	1ϕ	51 A	NEMA 6-50R
EQ309		TIG WELDER	240 V	3ϕ	36 A	CS8369
EQ310		STICK WELDER	240 V	3ϕ	36 A	CS8369
EQ321		IRRIGATION PUMP TRAINER	480 V	3ϕ		N/A
EQ500		FUTURE 480V CONNECTION	480 V	3ϕ	16 A	NEMA L16-20R
EQ501		WELDER	208 V	3ϕ	40 A	CS8369
EQ800		EXTERIOR SPECIAL PURPOSE CORD REEL	240 V	1ϕ	50 A	NEMA 6-50R
EQ801		EXTERIOR SPECIAL PURPOSE CORD REEL	240 V	3ϕ	50 A	NEMA 15-50R
EQ105	D6 - DISPLAY SPACE	ENGINE DISPLAY	120 V	1ϕ	4 A	NEMA 5-20R
EQ107	D6 - DISPLAY SPACE	DRIVE TRAIN DISPLAY	120 V	1ϕ	15 A	NEMA 5-20R
EQ108	D7 - STORAGE	TIRE CHANGER	240 V	1ϕ	7 A	NEMA L6-20R
EQ109	D7 - STORAGE	WHEEL ALIGNER	120 V	1ϕ	4 A	NEMA 5-20R
EQ110	D7 - STORAGE	BRAKE LATHE	120 V	1ϕ	16 A	NEMA 5-20R
EQ110a	D7 - STORAGE	FUTURE BRAKE LATHE	240 V	1ϕ	12 A	NEMA L6-20R
EQ111	D7 - STORAGE	TIRE BALANCER	240 V	1ϕ	10 A	NEMA L6-15R
EQ103	D8 - AUTOMOTIVE TECHNOLOGY	VEHICLE LIFT	208 V	1ϕ	12 A	N/A
EQ104	D8 - AUTOMOTIVE TECHNOLOGY	ALIGNMENT RACK	208 V	1ϕ	26 A	N/A
EQ106a	D8 - AUTOMOTIVE TECHNOLOGY	EMISSIONS TEST RACK	240 V	1ϕ	18 A	N/A
EQ115	D8 - AUTOMOTIVE TECHNOLOGY	MIG WELDER	240 V	1ϕ	51 A	NEMA 6-50R
EQ117	D8 - AUTOMOTIVE TECHNOLOGY	PEDESTAL GRINDER	120 V	1ϕ	7 A	NEMA 5-20R
EQ118	D8 - AUTOMOTIVE TECHNOLOGY	DRILL PRESS	120 V	1ϕ	16 A	NEMA 5-20R
EQ106b	D9 - STORAGE	EMISSIONS TEST CART	120 V	1ϕ	2 A	NEMA 5-20R
EQ113	D10 - STORAGE	ELECTRONICS TRAINER	120 V	1ϕ	2 A	NEMA 5-20R
EQ705	E1 - INDUSTRIAL AUTOMATION TECHNOLOGY	TRAINING BOARD	240 V	3ϕ	10 A	NEMA L15-20R
EQ712	E1 - INDUSTRIAL AUTOMATION TECHNOLOGY	AMETRAL CONTROL FOR TEMPERATURE	208 V	3ϕ	12 A	NEMA L21-20R
EQ707	E4 - INDUSTRIAL AUTOMATION ROBOTICS	FANUC LR MATE ROBOT	120 V	1ϕ	13 A	NEMA 5-20R
EQ708	E4 - INDUSTRIAL AUTOMATION ROBOTICS	FANUC ARC MATE ROBOT	240 V	1ϕ	10 A	CS8465C
EQ709	E4 - INDUSTRIAL AUTOMATION ROBOTICS	AMETRAL PEGASUS	120 V	1ϕ	12 A	NEMA 5-20R
EQ710	E4 - INDUSTRIAL AUTOMATION ROBOTICS	FUTURE ROBOT LOCATION	120 V	1ϕ	15 A	NEMA 5-20R
EQ304	E7 - STORAGE	HORIZONTAL BAND SAW	208 V	1ϕ	8 A	NEMA L6-20R
EQ305	E11 - AGRICULTURAL MECHANICS	CUT OFF SAW	240 V	3ϕ	15 A	NEMA L15-20R
EQ306	E11 - AGRICULTURAL MECHANICS	DRILL PRESS	208 V	3ϕ	8 A	NEMA L10-20R
EQ307	E11 - AGRICULTURAL MECHANICS	LATHE	208 V	1ϕ	10 A	NEMA L6-20R
EQ311a	E11 - AGRICULTURAL MECHANICS	PLASMA CUTTER	208 V	3ϕ	41 A	RECEPTACLE: CS6369 PLUG: CS6365C
EQ311b	E11 - AGRICULTURAL MECHANICS	PLASMA CUTTER TABLE	120 V	1ϕ	15 A	NEMA 5-20R
EQ313	E11 - AGRICULTURAL MECHANICS	GRINDING WHEEL	120 V	1ϕ	14 A	NEMA 5-20R
EQ314	E11 - AGRICULTURAL MECHANICS	BUFFING WHEEL	120 V	1ϕ	14 A	NEMA 5-20R
EQ315	E11 - AGRICULTURAL MECHANICS	WIRE WHEEL	120 V	1ϕ	14 A	NEMA 5-20R
EQ316	E11 - AGRICULTURAL MECHANICS	BELT SANDER	120 V	1ϕ	20 A	NEMA 5-20R
EQ317	E11 - AGRICULTURAL MECHANICS	HOIST BEAM AND CRANE	480 V	3ϕ	10 A	N/A
EQ318	E11 - AGRICULTURAL MECHANICS	SHEAR	240 V	3ϕ	10 A	NEMA L15-20R
EQ320	E11 - AGRICULTURAL MECHANICS	HYDROSTATIC TRAINER	480 V	3ϕ	27 A	NEMA L16-30R
EQ201a	F3 - CONSTRUCTION TECHNOLOGY	CNC ROUTER - SPINDLE	208 V	1ϕ	20 A	NEMA L6-20R
EQ201b	F3 - CONSTRUCTION TECHNOLOGY	CNC ROUTER - SPINDLE COOLING PUMP	120 V	1ϕ	6 A	NEMA 5-20R
EQ202	F3 - CONSTRUCTION TECHNOLOGY	LARGE TABLE SAW	240 V	3ϕ	22 A	NEMA L15-20R
EQ203	F3 - CONSTRUCTION TECHNOLOGY	SMALL TABLE SAW	240 V	3ϕ	15 A	NEMA L15-20R
EQ204	F3 - CONSTRUCTION TECHNOLOGY	JOINTER	240 V	1ϕ	10 A	NEMA L6-20R
EQ205	F3 - CONSTRUCTION TECHNOLOGY	THICKNESS PLANAR	240 V	3ϕ	15 A	NEMA L15-30R
EQ206	F3 - CONSTRUCTION TECHNOLOGY	LARGE BAND SAW	240 V	3ϕ	15 A	NEMA L15-30R
EQ207	F3 - CONSTRUCTION TECHNOLOGY	SMALL BAND SAW	120 V	1ϕ	16 A	NEMA 5-20R
EQ208	F3 - CONSTRUCTION TECHNOLOGY	DRUM SANDER	208 V	3ϕ	4 A	NEMA 15-60R
EQ209	F3 - CONSTRUCTION TECHNOLOGY	DISC SANDER	240 V	3ϕ	6 A	NEMA L15-20R
EQ210	F3 - CONSTRUCTION TECHNOLOGY	TWO SIDED BELT SANDER	120 V	1ϕ	0 A	NEMA 5-20R
EQ211	F3 - CONSTRUCTION TECHNOLOGY	COMPOUND MITER SAW	120 V	1ϕ	15 A	NEMA 5-20R
EQ212	F3 - CONSTRUCTION TECHNOLOGY	DRILL PRESS	120 V	1ϕ	8 A	NEMA 5-20R
EQ213	F3 - CONSTRUCTION TECHNOLOGY	SPINDLE SANDER	240 V	3ϕ	4 A	NEMA L15-20R
EQ214	F3 - CONSTRUCTION TECHNOLOGY	SHAPER	240 V	3ϕ	12 A	NEMA L15-30R
EQ215	F3 - CONSTRUCTION TECHNOLOGY	POWER FEED FOR SHAPER EQ216	120 V	1ϕ	6 A	NEMA 5-20R
EQ216	F3 - CONSTRUCTION TECHNOLOGY	LATHE	240 V	1ϕ	7 A	NEMA L6-20R
EQ217	F3 - CONSTRUCTION TECHNOLOGY	SCROLL SAW	120 V	1ϕ	1 A	NEMA 5-20R
EQ218	F3 - CONSTRUCTION TECHNOLOGY	FUTURE EDGE BANDING MACHINE	240 V	1ϕ	40 A	CS8269
EQ219	F3 - CONSTRUCTION TECHNOLOGY	FUTURE MILL	120 V	1ϕ	2 A	NEMA 5-20R
EQ500	F9 - ELECTRICIAN TRAINING	FUTURE 480V CONNECTION	480 V	3ϕ	16 A	NEMA L16-20R
EQ403	F10 - ENVIRONMENTAL CONTROLS	HVAC TRAINER - H-ACT-1	240 V	1ϕ	20 A	NEMA L14-20R
EQ404	F10 - ENVIRONMENTAL CONTROLS	HVAC TRAINER - CARRIER	120 V	1ϕ	20 A	NEMA 5-20R
EQ405	F10 - ENVIRONMENTAL CONTROLS	HVAC TRAINER - TECHNOVATE	120 V	1ϕ	15 A	NEMA 5-20R
EQ406	F10 - ENVIRONMENTAL CONTROLS	BUFFING WHEEL/WIRE WHEEL	120 V	1ϕ	14 A	NEMA 5-20R
EQ407	F10 - ENVIRONMENTAL CONTROLS	GRINDING WHEEL	120 V	1ϕ	14 A	NEMA 5-20R
EQ408	F10 - ENVIRONMENTAL CONTROLS	DRILL PRESS	120 V	1ϕ	16 A	NEMA 5-20R
EQ409	F10 - ENVIRONMENTAL CONTROLS	SPOT WELDER	240 V	1ϕ	0 A	
EQ600	F19 - INDUSTRIAL MAINTENANCE	SPECIAL PURPOSE CORD REEL	240 V	1ϕ	50 A	NEMA 6-50R
EQ605	F19 - INDUSTRIAL MAINTENANCE	MIG WELDER	240 V	1ϕ	50 A	NEMA 6-50R
EQ606	F19 - INDUSTRIAL MAINTENANCE	TIG WELDER	240 V	3ϕ	36 A	CS8369
EQ607	F19 - INDUSTRIAL MAINTENANCE	STICK WELDER	240 V	3ϕ	36 A	CS8369
EQ608	F19 - INDUSTRIAL MAINTENANCE	PEDESTAL GRINDER	120 V	1ϕ	14 A	NEMA 5-20R
EQ609	F19 - INDUSTRIAL MAINTENANCE	BENCHTOP GRINDER	120 V	1ϕ	14 A	NEMA 5-20R
EQ610	F19 - INDUSTRIAL MAINTENANCE	BENCHTOP DRILL PRESS	120 V	1ϕ	8 A	NEMA 5-20R
EQ611	F19 - INDUSTRIAL MAINTENANCE	HORIZONTAL BAND SAW	240 V	3ϕ	15 A	NEMA L15-30R
EQ612	F19 - INDUSTRIAL MAINTENANCE	VERTICAL BAND SAW	240 V	1ϕ	12 A	NEMA L6-20R
EQ613	F19 - INDUSTRIAL MAINTENANCE	LATHE	240 V	3ϕ	15 A	NEMA L15-30R
EQ614	F19 - INDUSTRIAL MAINTENANCE	MILLING MACHINE	240 V	3ϕ	10 A	NEMA L15-20R
EQ615	F19 - INDUSTRIAL MAINTENANCE	WHEEL/BELT SANDER	120 V	1ϕ	16 A	NEMA 5-20R
EQ616a	F19 - INDUSTRIAL MAINTENANCE	PLASMA CUTTER	208 V	3ϕ	41 A	RECEPTACLE: CS6369 PLUG: CS6365C
EQ616b	F19 - INDUSTRIAL MAINTENANCE	PLASMA CUTTER TABLE	120 V	1ϕ	15 A	NEMA 5-20R
EQ617	F19 - INDUSTRIAL MAINTENANCE	MOTOR CONTROL TRAINER	240 V	3ϕ	2 A	NEMA L15-20R
EQ625	F19 - INDUSTRIAL MAINTENANCE	HYDRAULIC TRAINER	240 V	3ϕ	0 A	
EQ626	F19 - INDUSTRIAL MAINTENANCE	PNEUMATIC TRAINER	120 V	1ϕ	0 A	

FEEDER SCHEDULE

FEEDER	ORIGIN	DESTINATION	CONDUIT	CONDUCTORS	CALCULATED VOLTAGE DROP	REMARKS
MV9	(E) MV UNDERGROUND SWITCHGEAR	TRANSFORMER 'TMV-5'	ONE (N) 4"C CONCRETE ENCASED	3#1/0 CU MV-105 15kV 133% SHIELDED + 1#1/0 CU GND	0.09%	15kV FEEDER IN CONCRETE ENCASED DUCT BANK; REFER TO DETAIL 12/E600
MV4	(E) MV UNDERGROUND SWITCHGEAR	TRANSFORMER 'TMV-5'	ONE (E) 3"C CONCRETE ENCASED	3#1/0 CU MV-105 15kV 133% SHIELDED + 1#1/0 CU GND	0.09%	(N) 15kV FEEDER IN (E) CONCRETE ENCASED DUCT BANK
F2	TRANSFORMER 'TMV-5'	MAIN SWITCHGEAR 'MSB-5'	SIX 3"C, SCH. 40 PVC	4#400KCMIL CU XHHW-2, IN EACH CONDUIT	0.20%	GROUNDED NEUTRAL SERVICE FEEDER - SIX PARALLEL FEEDERS
F3	MAIN SWITCHGEAR 'MSB-5'	DISTRIBUTION PANEL 'DPD'	TWO 3"C	4#350KCMIL CU THWN, 1#1 CU GND, IN EACH CONDUIT	0.86%	TWO PARALLEL FEEDERS
F4	MAIN SWITCHGEAR 'MSB-5'	DISTRIBUTION PANEL 'DPE'	TWO 3"C	4#350KCMIL CU THWN, 1#1 CU GND, IN EACH CONDUIT	0.52%	TWO PARALLEL FEEDERS
F5	MAIN SWITCHGEAR 'MSB-5'	DISTRIBUTION PANEL 'DPF'	THREE 3"C	4#400KCMIL CU THWN, 1#2/0 CU GND, IN EACH CONDUIT	0.98%	THREE PARALLEL FEEDERS
F6	DISTRIBUTION PANEL 'DPD'	PANEL 'ACD'	ONE 1 1/2"C	4#1/0 CU THWN, 1#6 CU GND	0.05%	FEEDER
F7	DISTRIBUTION PANEL 'DPD'	TRANSFORMER 'TDRD'	ONE 2 1/2"C	3#4/0 CU THWN, 1#4 CU GND	0.11%	FEEDER
F8	TRANSFORMER 'TDRD'	DISTRIBUTION PANEL 'DRD'	TWO 3"C	4#350KCMIL CU THWN, 1#3/0 CU GND, IN EACH CONDUIT	0.22%	TWO PARALLEL FEEDERS WITH SUPPLY-SIDE BONDING JUMPER
F9	DISTRIBUTION PANEL 'DPD'	TRANSFORMER 'TED'	ONE 2"C	3#4/0 CU THWN, 1#4 CU GND	0.17%	FEEDER
F10	TRANSFORMER 'TED'	PANEL 'ED'	TWO 2"C	4#3/0 CU THWN, 1#2 CU GND IN EACH CONDUIT	1.06%	TWO PARALLEL FEEDERS WITH SUPPLY-SIDE BONDING JUMPER
F11	DISTRIBUTION PANEL 'DPD'	PANEL 'LD'	ONE 2"C	4#2 CU THWN, 1#6 CU GND	0.01%	FEEDER
F12	DISTRIBUTION PANEL 'DRD'	PANEL 'R1D'	ONE 2"C	4#3/0 CU THWN, 1#6 CU GND	0.63%	FEEDER
F13	DISTRIBUTION PANEL 'DRD'	PANEL 'R2D'	ONE 2"C	4#2 CU THWN, 1#6 CU GND	0.10%	FEEDER
F14	DISTRIBUTION PANEL 'DRD'	PANEL 'R3D'	ONE 2"C	4#3/0 CU THWN, 1#6 CU GND	0.44%	FEEDER
F15	DISTRIBUTION PANEL 'DRD'	PANEL 'ITD'	ONE 2"C	4#2 CU THWN, 1#6 CU GND	0.03%	FEEDER
F16	DISTRIBUTION PANEL 'DPE'	PANEL 'ACE'	ONE 2"C	4#1/0 CU THWN, 1#6 CU GND	0.05%	FEEDER
F17	DISTRIBUTION PANEL 'DPE'	TRANSFORMER 'TDRE'	ONE 2 1/2"C	3#4/0 CU THWN, 1#4 CU GND	0.11%	FEEDER
F18	TRANSFORMER 'TDRE'	DISTRIBUTION PANEL 'DRE'	TWO 3"C	4#350KCMIL CU THWN, 1#3/0 CU GND, IN EACH CONDUIT	0.15%	TWO PARALLEL FEEDERS WITH SUPPLY-SIDE BONDING JUMPER
F19	DISTRIBUTION PANEL 'DPE'	TRANSFORMER 'TE1E'	ONE 1 1/4"C	3#1 CU THWN, 1#6 CU GND	0.26%	FEEDER
F20	TRANSFORMER 'TE1E'	PANEL 'E1E'	ONE 2"C	4#3/0 CU THWN, 1#6 CU GND	0.11%	FEEDER WITH SUPPLY-SIDE BONDING JUMPER
F21	DISTRIBUTION PANEL 'DPE'	TRANSFORMER 'TE2E'	ONE 1 1/4"C	3#1 CU THWN, 1#6 CU GND	0.22%	FEEDER
F22	TRANSFORMER 'TE2E'	PANEL 'E2E'	ONE 2"C	4#3/0 CU THWN, 1#6 CU GND	0.12%	FEEDER WITH SUPPLY-SIDE BONDING JUMPER
F23	DISTRIBUTION PANEL 'DPE'	PANEL 'LE'	ONE 2"C	4#2 CU THWN, 1#6 CU GND	0.03%	FEEDER
F24	DISTRIBUTION PANEL 'DRE'	PANEL 'R1E'	ONE 2"C	4#1 CU THWN, 1#6 CU GND	0.26%	FEEDER
F25	DISTRIBUTION PANEL 'DRE'	PANEL 'R2E'	ONE 2"C	4#3/0 CU THWN, 1#6 CU GND	0.64%	FEEDER
F26	DISTRIBUTION PANEL 'DRE'	PANEL 'R3E'	ONE 2"C	4#2 CU THWN, 1#6 CU GND	0.18%	FEEDER
F27	DISTRIBUTION PANEL 'DRE'	PANEL 'ITE'	ONE 2"C	4#2 CU THWN, 1#6 CU GND	0.06%	FEEDER
F28	DISTRIBUTION PANEL 'DPF'	PANEL 'ACF'	ONE 2"C	4#3/0 CU THWN, 1#6 CU GND	0.15%	FEEDER
F29	DISTRIBUTION PANEL 'DPF'	TRANSFORMER 'TDRF'	TWO 2"C	3#4/0 CU THWN, 1#2 CU GND IN EACH CONDUIT	0.07%	TWO PARALLEL FEEDER
F30	TRANSFORMER 'TDRF'	DISTRIBUTION PANEL 'DRF'	THREE 3"C	4#300KCMIL CU THWN, 1#3/0 CU GND, IN EACH CONDUIT	0.13%	THREE PARALLEL FEEDERS WITH SUPPLY-SIDE BONDING JUMPER
F31	DISTRIBUTION PANEL 'DPF'	TRANSFORMER 'TE1F'	ONE 2"C	3#2/0 CU THWN, 1#6 CU GND	0.81%	FEEDER
F32	TRANSFORMER 'TE1F'	PANEL 'E1F'	ONE 3"C	4#350KCMIL CU THWN, 1#2 CU GND	0.14%	FEEDER WITH SUPPLY-SIDE BONDING JUMPER
F33	DISTRIBUTION PANEL 'DPF'	TRANSFORMER 'TE3F'	ONE 2"C	3#1 CU THWN, 1#6 CU GND	0.68%	FEEDER
F34	TRANSFORMER 'TE3F'	PANEL 'E3F'	ONE 2"C	4#2/0 CU THWN, 1#4 CU GND	0.12%	FEEDER WITH SUPPLY-SIDE BONDING JUMPER
F35	DISTRIBUTION PANEL 'DPF'	TRANSFORMER 'TE4F'	ONE 2"C	3#1 CU THWN, 1#6 CU GND	0.67%	FEEDER
F36	TRANSFORMER 'TE4F'	PANEL 'E4F'	ONE 3"C	4#350KCMIL CU THWN, 1#2 CU GND	0.08%	FEEDER WITH SUPPLY-SIDE BONDING JUMPER
F37	DISTRIBUTION PANEL 'DPF'	PANEL 'LF'	ONE 2"C	4#2 CU THWN, 1#6 CU GND	0.06%	FEEDER
F38	DISTRIBUTION PANEL 'DRF'	PANEL 'R7F'	ONE 2"C	4#1 CU THWN, 1#6 CU GND	2.47%	FEEDER
F39	DISTRIBUTION PANEL 'DRF'	PANEL 'R1F'	ONE 2"C	4#3/0 CU THWN, 1#6 CU GND	1.39%	FEEDER
F40	DISTRIBUTION PANEL 'DRF'	PANEL 'R2F'	ONE 2"C	4#1 CU THWN, 1#6 CU GND	0.71%	FEEDER
F41	DISTRIBUTION PANEL 'DRF'	PANEL 'R3F'	ONE 2"C	4#2 CU THWN, 1#6 CU GND	_.__%	FEEDER
F42	DISTRIBUTION PANEL 'DRF'	PANEL 'R4F'	ONE 2"C	4#3/0 CU THWN, 1#6 CU GND	0.06%	FEEDER
F43	DISTRIBUTION PANEL 'DRF'	PANEL 'R5F'	ONE 2"C	4#2 CU THWN, 1#6 CU GND	_.__%	FEEDER
F44	DISTRIBUTION PANEL 'DRF'	PANEL 'R6F'	ONE 2"C	4#1 CU THWN, 1#6 CU GND	1.08%	FEEDER
F45	DISTRIBUTION PANEL 'DRF'	PANEL 'ITF'	ONE 2"C	4#2 CU THWN, 1#6 CU GND	0.13%	FEEDER
F46	PANEL 'E1F'	PANEL 'E2F'	ONE 2"C	4#1/0 CU THWN, 1#6 CU GND	0.07%	FEEDER
F47	DISTRIBUTION PANEL 'DPD'	PANEL 'ACLD'	ONE 2"C	4#1/0 CU THWN, 1#6 CU GND	0.14%	FEEDER
F48	DISTRIBUTION PANEL 'DRE'	PANEL 'ACLE'	ONE 2"C	4#2 CU THWN, 1#6 CU GND	0.18%	FEEDER
F49	DISTRIBUTION PANEL 'DRF'	PANEL 'ACLF'	ONE 2"C	4#3/0 CU THWN, 1#6 CU GND	0.14%	FEEDER
F50	DISTRIBUTION PANEL 'DPF'	TRANSFORMER 'TBDF'	ONE 2"C	3#1 CU THWN, 1#6 CU GND	0.22%	FEEDER
F51	TRANSFORMER 'TBDF'	PANEL 'BDF'	ONE 3"C	3#350KCMIL CU THWN, 1#2 CU GND	0.09%	FEEDER WITH SUPPLY-SIDE BONDING JUMPER
F52	DISTRIBUTION PANEL 'DRD'	PANEL 'FPH'	ONE 2"C	4#2 CU THWN, 1#6 CU GND	0.71%	FEEDER
F53	MAIN SWITCHGEAR 'MSB-5'	TRANSFORMER 'TEY'	ONE 2"C	3#4 CU THWN, 1#8 CU GND	0.10%	FEEDER
F54	TRANSFORMER 'TEY'	PANEL 'EY'	ONE 3"C	4#2/0 CU THWN, 1#4 CU GND	0.10%	FEEDER WITH SUPPLY-SIDE BONDING JUMPER
F55	MAIN SWITCHGEAR 'MSB-5'	IRRIGATION TRAINER 'EQ321'	ONE 1"C	3#12 CU THWN, 1#12 CU GND	0.48%	FEEDER
F56	DISTRIBUTION PANEL 'DPF'	TRANSFORMER 'TE5F'	ONE 2"C	3#2/0 CU THWN, 1#6 CU GND	0.98%	FEEDER
F57	TRANSFORMER 'TE5F'	PANEL 'E5F'	TWO 2"C	4#3/0 CU THWN, 1#2 CU GND IN EACH CONDUIT	0.16%	TWO PARALLEL FEEDERS WITH SUPPLY-SIDE BONDING JUMPER

FOR BID ONLY

Teter, LLP expressly reserves its common law copyright and other property rights in these plans. This document, the ideas and designs incorporated herein, as an instrument of professional service, is not to be used in whole or in part, for any other project without prior written authorization.

MARK	DATE	DESCRIPTION
	11/1/22	DSA BACKCHECK

TETER, LLP
FRESNO HEADQUARTERS
VISALIA | BAKERSFIELD | MODESTO | SAN LUIS OBISPO
ARCHITECTS ENGINEERS CONSULTANTS

TULARE CAMPUS CTE
COLLEGE OF THE SEQUOIAS
4999 E. BARDSLEY AVE.
TULARE, CA

DRAWING TITLE
EQUIPMENT AND FEEDER SCHEDULE

PROJECT NO.
21-12032

DRAWING
E801

PLOT DATE: 11/2/2022 9:56:26 AM

\\tet-file1\Users\corey.stone\Documents\12032-E-COS Tulare CTE_corey.stone.rvt

PANEL: 'MSB-5'

NEW
MAIN SWITCHBOARD

BUS: 2000 AMP BUS
VOLTAGE: 277/480V, 3 PH, 4 W
NEUTRAL: 100% RATED NEUTRAL

MAIN: 2000A CB LSIG
TRIP: ELECTRONIC
A.I.C.: 65000

LOCATION: ELECTRICAL YARD
MOUNTING: PAD PER 13/E600
ENCLOSURE: NEMA 3R

CIRCUIT CKT NO.	CIRCUIT PNL SPACE	BREAKER AMP	BREAKER POLE	SERVES	VOLT-AMPERES LOAD	A	B	C
					116904	116904		
1	1	600	3	BUILDING 'D' PANEL 'DPD'	114580		114580	
					107685			107685
2	2	600	3	BUILDING 'E' PANEL 'DPE'	108077	108077		
					100218		100218	
					83504			83504
3	3	800	3	BUILDING 'F' PANEL 'DPF'	296568	296568		
					285017		285017	
					285432			285432
4	4	15	3	IRRIGATION PUMP TRAINER - 'EQ312'	1801	1801		
					1801		1801	
					1801			1801
5	5	70	3	TRANSFORMER 'TEY' PANEL 'EY'	8816	8816		
					8996		8996	
					9356			9356
6	6		3	SPACE	0	0		
					0		0	
					0			0
7	7		3	SPACE	0	0		
					0		0	
					0			0
8	8		3	SPACE	0	0		
					0		0	
					0			0
				TOTAL CONNECTED LOAD (VA) :		532166	510613	487978
				25% LCL/LML (VA) :		0	0	0
				TOTAL CALCULATED LOAD (VA) :		532166	510613	487978
				TOTAL CALCULATED LOAD (AMPS) :		1921.2	1843.4	1761.7

PANEL: 'DPD'

NEW
BUILDING D DISTRIBUTION PANEL

BUS: 600 AMP BUS
VOLTAGE: 277/480V, 3 PH, 4 W
NEUTRAL: 100% RATED NEUTRAL

MAIN: 600A CB
TRIP: THERMAL-MAGNETIC
A.I.C.: 42000

LOCATION: ELEC. RM. - D11
MOUNTING: SURFACE PER 11/E600
ENCLOSURE: NEMA 1

CIRCUIT CKT NO.	CIRCUIT PNL SPACE	BREAKER AMP	BREAKER POLE	SERVES	VOLT-AMPERES LOAD	A	B	C
					30290	30290		
1	1	150	3	PANEL 'ACD'	30290		30290	
					30290			30290
2	2	225	3	TRANSFORMER 'TDRD' PANEL 'DRD'	40373	40373		
					44852		44852	
					29732			29732
3	3	225	3	TRANSFORMER 'TED' PANEL 'ED'	42069	42069		
					36333		36333	
					44712			44712
4	4	100	3	PANEL 'LD'	4173	4173		
					3105		3105	
					2951			2951
5	5		3	SPACE	0	0		
					0		0	
					0			0
6	6		3	SPACE	0	0		
					0		0	
					0			0
7	7		3	SPACE	0	0		
					0		0	
					0			0
8	8		3	SPACE	0	0		
					0		0	
					0			0
				TOTAL CONNECTED LOAD (VA) :		116904	114580	107685
				25% LCL/LML (VA) :		0	0	0
				TOTAL CALCULATED LOAD (VA) :		116904	114580	107685
				TOTAL CALCULATED LOAD (AMPS) :		422.0	413.6	388.8

PANEL: 'DPE'

NEW
BUILDING E DISTRIBUTION PANEL

BUS: 600 AMP BUS
VOLTAGE: 277/480V, 3 PH, 4 W
NEUTRAL: 100% RATED NEUTRAL

MAIN: 600A CB
TRIP: THERMAL-MAGNETIC
A.I.C.: 42000

LOCATION: ELEC. RM. - E9
MOUNTING: SURFACE PER 11/E600
ENCLOSURE: NEMA 1

CIRCUIT CKT NO.	CIRCUIT PNL SPACE	BREAKER AMP	BREAKER POLE	SERVES	VOLT-AMPERES LOAD	A	B	C
					28142	28142		
1	1	150	3	PANEL 'ACE'	28142		28142	
					28142			28142
2	2	225	3	TRANSFORMER 'TDRE' PANEL 'DRE'	36986	36986		
					31576		31576	
					26402			26402
3	3	125	3	TRANSFORMER 'TE1E' PANEL 'E1E'	15889	15889		
					15889		15889	
					8965			8965
4	4	125	3	TRANSFORMER 'TE2E' PANEL 'E2E'	17828	17828		
					17828		17828	
					16628			16628
5	5	100	3	PANEL 'LE'	9231	9231		
					6783		6783	
					3366			3366
6	6		3	SPACE	0	0		
					0		0	
					0			0
7	7		3	SPACE	0	0		
					0		0	
					0			0
8	8		3	SPACE	0	0		
					0		0	
					0			0
				TOTAL CONNECTED LOAD (VA) :		108077	100218	83504
				25% LCL/LML (VA) :		0	0	0
				TOTAL CALCULATED LOAD (VA) :		108077	100218	83504
				TOTAL CALCULATED LOAD (AMPS) :		390.2	361.8	301.5

PANEL: 'DPF'

NEW
BUILDING F DISTRIBUTION PANEL

BUS: 1200 AMP BUS
VOLTAGE: 277/480V, 3 PH, 4 W
NEUTRAL: 100% RATED NEUTRAL

MAIN: 1000A CB
TRIP: THERMAL-MAGNETIC
A.I.C.: 42000

LOCATION: ELEC. RM. - F18
MOUNTING: PAD PER 14/E600
ENCLOSURE: NEMA 1

CIRCUIT CKT NO.	CIRCUIT PNL SPACE	BREAKER AMP	BREAKER POLE	SERVES	VOLT-AMPERES LOAD	A	B	C
					47486	47486		
1	1	200	3	PANEL 'ACF'	47486		47486	
					47486			47486
2	2	450	3	TRANSFORMER 'TDRF' PANEL 'DRF'	77352	77352		
					79410		79410	
					72927			72927
3	3	175	3	TRANSFORMER 'TE1F' PANEL 'E1F'	31627	31627		
					22027		22027	
					29359			29359
4	4	125	3	TRANSFORMER 'TE3F' PANEL 'E3F'	15233	15233		
					15233		15233	
					13205			13205
5	5	125	3	TRANSFORMER 'TE4F' PANEL 'E4F'	19200	19200		
					16320		16320	
					16320			16320
6	6	175	3	TRANSFORMER 'TE5F' PANEL 'E5F'	35841	35841		
					35841		35841	
					34641			34641
7	7	100	3	PANEL 'LF'	5428	5428		
					4299		4299	
					7293			7293
8	8	225	3	TRANSFORMER 'TBDF' PANEL 'BDF'	64401	64401		
					64401		64401	
					64401			64401
				TOTAL CONNECTED LOAD (VA) :		296568	285017	285632
				25% LCL/LML (VA) :		0	0	0
				TOTAL CALCULATED LOAD (VA) :		296568	285017	285632
				TOTAL CALCULATED LOAD (AMPS) :		1070.6	1028.9	1031.2

PANEL: 'DRD'

NEW
DISTRIBUTION PANEL

BUS: 600 AMP BUS
VOLTAGE: 120/208V, 3 PH, 4 W
NEUTRAL: 100% RATED NEUTRAL

MAIN: 600A CB
TRIP: THERMAL-MAGNETIC
A.I.C.: 22000

LOCATION: ELEC. RM. - D11
MOUNTING: SURFACE PER 11/E600
ENCLOSURE: NEMA 1

CIRCUIT CKT NO.	CIRCUIT PNL SPACE	BREAKER AMP	BREAKER POLE	SERVES	VOLT-AMPERES LOAD	A	B	C
					11212	11212		
1	1	200	3	PANEL 'R1D'	14060		14060	
					9548			9548
2	2	100	3	PANEL 'R2D'	2070	2070		
					2124		2124	
					1764			1764
3	3	200	3	PANEL 'R3D'	9360	9360		
					9180		9180	
					8280			8280
4	4	150	3	PANEL 'ACLD'	14441	14441		
					14571		14571	
					7439			7439
5	5	100	3	PANEL 'FPH'	1650	1650		
					3217		3217	
					2521			2521
6	6		3	SPACE	0	0		
					0		0	
					0			0
7	7		3	SPACE	0	0		
					0		0	
					0			0
8	8	100	3	PANEL 'ITD'	1640	1640		
					1700		1700	
					180			180
				TOTAL CONNECTED LOAD (VA) :		40373	44852	29732
				25% LCL/LML (VA) :		0	0	0
				TOTAL CALCULATED LOAD (VA) :		40373	44852	29732
				TOTAL CALCULATED LOAD (AMPS) :		336.4	373.8	247.8

PANEL: 'ACD'

NEW
PANELBOARD

150 AMP BUS
277/480V, 3 PH, 4 W
100% RATED NEUTRAL

MAIN: 150A CB
TRIP: THERMAL-MAGNETIC
A.I.C.: 22000 A

LOCATION: ELEC. RM. - D11
MOUNTING: SURFACE PER 11/E600
ENCLOSURE: NEMA 1

CIRCUIT CKT NO.	CIRCUIT PNL SPACE	BREAKER AMP	BREAKER POLE	SERVES	VOLT-AMPERES LOAD	A	B	C	LOAD	SERVES	BREAKER AMP	BREAKER POLE	CIRCUIT PNL SPACE	CIRCUIT CKT NO.
1	1				3326	6651			3326				2	2
3	3	20	3	HEATING COOLING UNIT 'HC-D1'	3326		6651		3326	HEATING COOLING UNIT 'HC-D2'	20	3	4	4
5	5				3326			6651	3326				6	6
7	7				3048	6097			3048				8	8
9	9	20	3	EVAPORATIVE COOLER 'EC-D1' BLOWER	3048		6097		3048	EVAPORATIVE COOLER 'EC-D2' BLOWER	20	3	10	10
11	11				3048			6097	3048				12	12
13	13				1330	2217			887				14	14
15	15	15	3	VEHICLE EXHAUST REEL 'ER-D1' & 'ER-D2' & 'ER-D9'	1330		2217		887	VEHICLE EXHAUST REEL 'ER-D3' & 'ER-D4'	15	3	16	16
17	17				1330			2217	887				18	18
19	19				887	2217			1330				20	20
21	21	15	3	VEHICLE EXHAUST REEL 'ER-D5' & 'ER-D6'	887		2217		1330	VEHICLE EXHAUST REEL 'ER-D7'	15	3	22	22
23	23				887			2217	1330				24	24
25	25				1330	10753			9422				26	26
27	27	15	3	VEHICLE EXHAUST REEL 'ER-D8'	1330		10753		9422	COMPRESSOR 'AC-2'	70	3	28	28
29	29				1330			10753	9422				30	30
31	31	20	1	SPARE	0	0			0	SPARE	20	1	32	32
33	33	20	1	SPARE	0		0		0	SPARE	20	1	34	34
35	35	20	1	SPARE	0			0	0	SPARE	20	1	36	36
37	37	20	1	SPARE	0	0			0	SPARE	20	1	38	38
39	39	20	1	SPARE	0		0		0	SPARE	20	1	40	40
41	41	20	1	SPARE	0			0	0	SPARE	20	1	42	42
				TOTAL CONNECTED LOAD (VA) :		27935	27935	27935						
				25% LCL/LML (VA) :		2356	2356	2356						
				TOTAL CALCULATED LOAD (VA) :		30290	30290	30290	TOTAL CALCULATED LOAD FOR PANEL:					
				TOTAL CALCULATED LOAD (AMPS) :		109.4	109.4	109.4	90870 VA					

PANEL: 'ACE'

NEW
PANELBOARD

150 AMP BUS
277/480V, 3 PH, 4 W
100% RATED NEUTRAL

MAIN: 150A CB
TRIP: THERMAL-MAGNETIC
A.I.C.: 22000 A

LOCATION: ELEC. RM. - E9
MOUNTING: SURFACE PER 11/E600
ENCLOSURE: NEMA 1

CIRCUIT CKT NO.	CIRCUIT PNL SPACE	BREAKER AMP	BREAKER POLE	SERVES	VOLT-AMPERES LOAD	A	B	C	LOAD	SERVES	BREAKER AMP	BREAKER POLE	CIRCUIT PNL SPACE	CIRCUIT CKT NO.
1	1				3353	5764			2411				2	2
3	3	20	3	HEATING COOLING UNIT 'HC-E1'	3353		5764		2411	HEATING COOLING UNIT 'HC-E2'	20	3	4	4
5	5				3353			5764	2411				6	6
7	7				3048	3880			831				8	8
9	9	20	3	EVAPORATIVE COOLER 'EC-E1' BLOWER	3048		3880		831	VEHICLE EXHAUST FAN 'VEF-E1'	15	3	10	10
11	11				3048			3880	831				12	12
13	13				582	6402			5820				14	14
15	15	15	3	VEHICLE EXHAUST REEL 'ER-E5'	582		6402		5820	COMPRESSOR 'AC-1'	40	3	16	16
17	17				582			6402	5820				18	18
19	19				2744	10226			7482				20	20
21	21	20	3	HOIST CRANE, EQ317 - AG. MECH. E11	2744		10226		7482	HYDROSTATIC TRAINER, EQ320 - AG. MECH. E11	60	3	22	22
23	23				2744			10226	7482				24	24
25	25	20	1	SPARE	0	0			0	SPARE	20	1	26	26
27	27	20	1	SPARE	0		0		0	SPARE	20	1	28	28
29	29	20	1	SPARE	0			0	0	SPARE	20	1	30	30
31	31	20	1	SPARE	0	0			0	SPARE	20	1	32	32
33	33	20	1	SPARE	0		0		0	SPARE	20	1	34	34
35	35	20	1	SPARE	0			0	0	SPARE	20	1	36	36
37	37	20	1	SPARE	0	0			0	SPARE	20	1	38	38
39	39	20	1	SPARE	0		0		0	SPARE	20	1	40	40
41	41	20	1	SPARE	0			0	0	SPARE	20	1	42	42
				TOTAL CONNECTED LOAD (VA) :		26272	26272	26272						
				25% LCL/LML (VA) :		1871	1871	1871						
				TOTAL CALCULATED LOAD (VA) :		28142	28142	28142	TOTAL CALCULATED LOAD FOR PANEL:					
				TOTAL CALCULATED LOAD (AMPS) :		101.6	101.6	101.6	84427 VA					

PANEL: 'ACF'

NEW
PANELBOARD

200 AMP BUS
277/480V, 3 PH, 4 W
100% RATED NEUTRAL

MAIN: 200A CB
TRIP: THERMAL-MAGNETIC
A.I.C.: 22000 A

LOCATION: ELEC. RM. - F18
MOUNTING: SURFACE PER 11/E600
ENCLOSURE: NEMA 1

CIRCUIT CKT NO.	CIRCUIT PNL SPACE	BREAKER AMP	BREAKER POLE	SERVES	VOLT-AMPERES LOAD	A	B	C	LOAD	SERVES	BREAKER AMP	BREAKER POLE	CIRCUIT PNL SPACE	CIRCUIT CKT NO.
1	1				3326	6651			3326				2	2
3	3	20	3	HEATING COOLING UNIT 'HC-F1'	3326		6651		3326	HEATING COOLING UNIT 'HC-F2'	20	3	4	4
5	5				3326			6651	3326				6	6
7	7				3880	5986			2106				8	8
9	9	25	3	EVAPORATIVE COOLER 'EC-F1' BLOWER	3880		5986		2106	EVAPORATIVE COOLER 'EC-F2' BLOWER	15	3	10	10
11	11				3880			5986	2106				12	12
13	13				3048	6097			3048				14	14
15	15	20	3	EVAPORATIVE COOLER 'EC-F3' BLOWER	3048		6097		3048	EVAPORATIVE COOLER 'EC-F4' BLOWER	20	3	16	16
17	17				3048			6097	3048				18	18
19	19				8369	17792			9422				20	20
21	21	70	3	DUST COLLECTOR 'DC-1'	8369		17792		9422	COMPRESSOR 'AC-2'	70	3	22	22
23	23				8369			17792	9422				24	24
25	25				4434	8868			4434				26	26
27	27	20	3	FUTURE 480V CONNECTION, 'EQ500'	4434		8868		4434	FUTURE 480V CONNECTION, 'EQ500'	20	3	28	28
29	29				4434			8868	4434				30	30
31	31	20	1	SPARE	0	0			0	SPARE	20	1	32	32
33	33	20	1	SPARE	0		0		0	SPARE	20	1	34	34
35	35	20	1	SPARE	0			0	0	SPARE	20	1	36	36
37	37	20	1	SPARE	0	0			0	SPARE	20	1	38	38
39	39	20	1	SPARE	0		0		0	SPARE	20	1	40	40
41	41	20	1	SPARE	0			0	0	SPARE	20	1	42	42
				TOTAL CONNECTED LOAD (VA) :		45394	45394	45394						
				25% LCL/LML (VA) :		2092	2092	2092						
				TOTAL CALCULATED LOAD (VA) :		47486	47486	47486	TOTAL CALCULATED LOAD FOR PANEL:					
				TOTAL CALCULATED LOAD (AMPS) :		171.4	171.4	171.4	142458 VA					

PANEL: 'LD'

NEW
PANELBOARD

100 AMP BUS
277/480V, 3 PH, 4 W
100% RATED NEUTRAL

MAIN: 100A CB
TRIP: THERMAL-MAGNETIC
A.I.C.: 22000 A

LOCATION: ELEC. RM. - D11
MOUNTING: SURFACE PER 11/E600
ENCLOSURE: NEMA 1

CIRCUIT CKT NO.	CIRCUIT PNL SPACE	BREAKER AMP	BREAKER POLE	SERVES	VOLT-AMPERES LOAD	A	B	C	LOAD	SERVES	BREAKER AMP	BREAKER POLE	CIRCUIT PNL SPACE	CIRCUIT CKT NO.
1	1	20	1	LIGHTING - AUTO TECH D8 SOUTH	2116	3188			1072	LIGHTING - EXTERIOR EAST SIDE	20	1	2	2
3	3	20	1	LIGHTING - AUTO TECH D8 NORTH	1872		2484		612	LIGHTING - EXTERIOR WEST SIDE	20	1	4	4
5	5	20	1	LIGHTING - RMS. D1-D7	855			2361	1506	LIGHTING - RMS. D9-D14	20	1	6	6
7	7	20	1	SPARE	150	150			0	SPARE	20	1	8	8
9	9	20	1	SPARE	0		0		0	SPARE	20	1	10	10
11	11	20	1	SPARE	0			0	0	SPARE	20	1	12	12
13	13	20	1	SPARE	0	0			0	SPARE	20	1	14	14
15	15	20	1	SPARE	0		0		0	SPARE	20	1	16	16
17	17	20	1	SPARE	0			0	0	SPARE	20	1	18	18
19	19	20	1	SPARE	0	0			0	SPARE	20	1	20	20
21	21	20	1	SPARE	0		0		0	SPARE	20	1	22	22
23	23	20	1	SPARE	0			0	0	SPARE	20	1	24	24
				TOTAL CONNECTED LOAD (VA) :		3338	2484	2361						
				25% LCL/LML (VA) :		835	621	590						
				TOTAL CALCULATED LOAD (VA) :		4173	3105	2951	TOTAL CALCULATED LOAD FOR PANEL:					
				TOTAL CALCULATED LOAD (AMPS) :		15.1	11.2	10.7	10229 VA					

PANEL: 'LE'

NEW
PANELBOARD

100 AMP BUS
277/480V, 3 PH, 4 W
100% RATED NEUTRAL

MAIN: 100A CB
TRIP: THERMAL-MAGNETIC
A.I.C.: 22000 A

LOCATION: ELEC. RM. - E9
MOUNTING: SURFACE PER 11/E600
ENCLOSURE: NEMA 1

CIRCUIT CKT NO.	CIRCUIT PNL SPACE	BREAKER AMP	BREAKER POLE	SERVES	VOLT-AMPERES LOAD	A	B	C	LOAD	SERVES	BREAKER AMP	BREAKER POLE	CIRCUIT PNL SPACE	CIRCUIT CKT NO.
1	1	20	1	LIGHTING - AG. MECH. E11	2044	2169			125	LIGHTING - MECH. PLATFORM E21	20	1	2	2
3	3	20	1	LIGHTING - RMS. E2-E3, E5-E10	619		1095		476	LIGHTING - EXTERIOR WEST SIDE	20	1	4	4
5	5	20	1	LIGHTING - IND. AUTO. E1 & E4	2148			2407	259	LIGHTING - EXTERIOR EAST SIDE	20	1	6	6
7	7	20	1	EXTERIOR COURTYARD WEST	2608	5216			2608	EXTERIOR COURTYARD EAST	20	1	8	8
9	9	20	1	EXTERIOR PATHWAY POLES	2445		4331		1886	BUILDING FAÇADE UPLIGHTS	20	1	10	10
11	11	20	1	GATE WALL PACKS	286			286	0	SPARE	20	1	12	12
13	13	20	1	SPARE	0	0			0	SPARE	20	1	14	14
15	15	20	1	SPARE	0		0		0	SPARE	20	1	16	16
17	17	20	1	SPARE	0			0	0	SPARE	20	1	18	18
19	19	20	1	SPARE	0	0			0	SPARE	20	1	20	20
21	21	20	1	SPARE	0		0		0	SPARE	20	1	22	22
23	23	20	1	SPARE	0			0	0	SPARE	20	1	24	24
				TOTAL CONNECTED LOAD (VA) :		7385	5426	2693						
				25% LCL/LML (VA) :		1846	1357	673						
				TOTAL CALCULATED LOAD (VA) :		9231	6783	3366	TOTAL CALCULATED LOAD FOR PANEL:					
				TOTAL CALCULATED LOAD (AMPS) :		33.3	24.5	12.2	19380 VA					

PANEL: 'LF'

NEW
PANELBOARD

100 AMP BUS
277/480V, 3 PH, 4 W
100% RATED NEUTRAL

MAIN: 100A CB
TRIP: THERMAL-MAGNETIC
A.I.C.: 22000 A

LOCATION: ELEC. RM. - F18
MOUNTING: SURFACE PER 11/E600
ENCLOSURE: NEMA 1

CIRCUIT CKT NO.	CIRCUIT PNL SPACE	BREAKER AMP	BREAKER POLE	SERVES	VOLT-AMPERES LOAD	A	B	C	LOAD	SERVES	BREAKER AMP	BREAKER POLE	CIRCUIT PNL SPACE	CIRCUIT CKT NO.
1	1	20	1	LIGHTING - IND. MAIN. LAB 'F19'	2314	2314			0	SPARE	20	1	2	2
3	3	20	1	LIGHTING - ENV. CNTRL. LAB 'F10'	2146		3064		918	LIGHTING - EXTERIOR NORTH SIDE	20	1	4	4
5	5	20	1	LIGHTING - F1 - F3	2045			3986	1941	LIGHTING - EXTERIOR SOUTH SIDE	20	1	6	6
7	7	20	1	LIGHTING - F4 - F9	2028	2028			0	SPARE	20	1	8	8
9	9	20	1	LIGHTING - MECHANICAL PLATFORMS	375		375		0	SPARE	20	1	10	10
11	11	20	1	LIGHTING - F11-F18 & F20-F32	1848			1848	0	SPARE	20	1	12	12
13	13	20	1	SPARE	0	0			0	SPARE	20	1	14	14
15	15	20	1	SPARE	0		0		0	SPARE	20	1	16	16
17	17	20	1	SPARE	0			0	0	SPARE	20	1	18	18
19	19	20	1	SPARE	0	0			0	SPARE	20	1	20	20
21	21	20	1	SPARE	0		0		0	SPARE	20	1	22	22
23	23	20	1	SPARE	0			0	0	SPARE	20	1	24	24
				TOTAL CONNECTED LOAD (VA) :		4342	3439	5834						
				25% LCL/LML (VA) :		1086	860	1459						
				TOTAL CALCULATED LOAD (VA) :		5428	4299	7293	TOTAL CALCULATED LOAD FOR PANEL:					
				TOTAL CALCULATED LOAD (AMPS) :		19.6	15.5	26.3	17019 VA					

PANEL: 'DRE'

NEW
DISTRIBUTION PANEL

BUS: 600 AMP BUS
VOLTAGE: 120/208V, 3 PH, 4 W
NEUTRAL: 100% RATED NEUTRAL

MAIN: 600A CB
TRIP: THERMAL-MAGNETIC
A.I.C.: 22000

LOCATION: ELEC. RM. - E9
MOUNTING: SURFACE PER 11/E600
ENCLOSURE: NEMA 1

CIRCUIT CKT NO.	CIRCUIT PNL SPACE	BREAKER AMP	BREAKER POLE	SERVES	VOLT-AMPERES LOAD	A	B	C
					9945	9945		
1	1	125	3	PANEL 'R1E'	8635		8635	
					6375			6375
2	2	200	3	PANEL 'R2E'	15789	15789		
					10153		10153	
					13113			13113
3	3	100	3	PANEL 'R3E'	3240	3240		
					3600		3600	
					3600			3600
4	4	100	3	PANEL 'ACLE'	6552	6552		
					7488		7488	
					3314			3314
5	5		3	SPACE	0	0		
					0		0	
					0			0
6	6		3	SPACE	0	0		
					0		0	
					0			0
7	7		3	SPACE	0	0		
					0		0	
					0			0
8	8	100	3	PANEL 'ITE'	1460	1460		
					1700		1700	
					0			0
				TOTAL CONNECTED LOAD (VA) :		36986	31576	26402
				25% LCL/LML (

\\tet-file1\Users\corey.stone\Documents\12032-E-COS Tulare CTE_corey.stone.rvt

PANEL: 'R1D'

200 AMP BUS | 120/208V, 3 PH, 4 W | 100% RATED NEUTRAL | MAIN: 200A CB | TRIP: THERMAL-MAGNETIC | A.I.C.: 14000 A | LOCATION: AUTOMOTIVE TECHNOLOGY - D8 | MOUNTING: SURFACE PER 11/E600 | ENCLOSURE: NEMA 1

NEW PANELBOARD

CIRCUIT CKT NO.	CIRCUIT PNL SPACE	BREAKER AMP	BREAKER POLE	SERVES	VOLT-AMPERES LOAD	A	B	C	LOAD	SERVES	BREAKER AMP	BREAKER POLE	CIRCUIT PNL SPACE	CIRCUIT CKT NO.
1	1	20	2	VEHICLE LIFT #1 'EQ103'	1248	2496			1248	VEHICLE LIFT #4 'EQ103'	20	2	2	2
3	3				1248		2496		1248				4	4
5	5	20	2	VEHICLE LIFT #2 'EQ103'	1248			2496	1248	VEHICLE LIFT #5 'EQ103'	20	2	6	6
7	7				1248	2496			1248				8	8
9	9	20	2	VEHICLE LIFT #3 'EQ103'	1248		3952		2704	ALIGNMENT RACK 'EQ104'	60	2	10	10
11	11				1248			3952	2704				12	12
13	13	30	1	BRAKE LATHE EQ110	1920	4416			2496	AQUEOUS PARTS WASHER, EQ114	30	2	14	14
15	15	30	1	DRILL PRESS EQ118	1920		4416		2496				16	16
17	17	20	1	PEDESTEL GRINDER EQ117	864			1344	480	WHEEL AUIGNER EQ109	20	1	18	18
19	19	20	1	PEDESTEL GRINDER EQ117	864	1344			480	ENGINE DISPLAY EQ105	20	1	20	20
21	21	20	1	RECPT. - DISPLAY SPACE D6	360		2160		1800	DRIVE TRAIN DISPLAY EQ107	20	1	22	22
23	23	20	1	RECPT. - STORAGE D7	720			900	180	EIS SMOG	20	1	24	24
25	25	20	1	RECPT. WEST WALL - AUTO TECH D8	180	280			100	FIRE RISER ELECTRIC BELL	20	1	26	26
27	27	20	1	RECPT. WEST WALL - AUTO TECH D8	180		180		0	SPARE	20	1	28	28
29	29	20	1	RECPT. WEST WALL - AUTO TECH D8	180			180	0	SPARE	20	1	30	30
31	31	20	1	RECPT. WEST WALL - AUTO TECH D8	180	180			0	SPARE	20	1	32	32
33	33	20	1	RECPT. WEST WALL - AUTO TECH D8	180		180		0	SPARE	20	1	34	34
35	35	20	1	SPARE	0			0	0	SPARE	20	1	36	36
37	37	20	1	SPARE	0	0			0	SPARE	20	1	38	38
39	39	20	1	SPARE	0		0		0	SPARE	20	1	40	40
41	41	20	1	SPARE	0			0	0	SPARE	20	1	42	42
				TOTAL CONNECTED LOAD (VA) :		11212	13384	8872						
				25% LCL/LML (VA) :		0	676	676						
				TOTAL CALCULATED LOAD (VA) :		11212	14060	9548	TOTAL CALCULATED LOAD FOR PANEL:					
				TOTAL CALCULATED LOAD (AMPS) :		93.4	117.2	79.6	34820 VA					

PANEL: 'R2D'

100 AMP BUS | 120/208V, 3 PH, 4 W | 100% RATED NEUTRAL | MAIN: 100A CB | TRIP: THERMAL-MAGNETIC | A.I.C.: 14000 A | LOCATION: AUTOMOTIVE TECHNOLOGY - D8 | MOUNTING: SURFACE PER 11/E600 | ENCLOSURE: NEMA 1

NEW PANELBOARD

CIRCUIT CKT NO.	CIRCUIT PNL SPACE	BREAKER AMP	BREAKER POLE	SERVES	VOLT-AMPERES LOAD	A	B	C	LOAD	SERVES	BREAKER AMP	BREAKER POLE	CIRCUIT PNL SPACE	CIRCUIT CKT NO.
1	1	20	1	CORD REEL - AUTO. TECH. D8	306	612			306	CORD REEL - AUTO. TECH. D8	20	1	2	2
3	3	20	1	CORD REEL - AUTO. TECH. D8	306		612		306	CORD REEL - AUTO. TECH. D8	20	1	4	4
5	5	20	1	CORD REEL - AUTO. TECH. D8	306			612	306	CORD REEL - AUTO. TECH. D8	20	1	6	6
7	7	20	1	CORD REEL - AUTO. TECH. D8	306	612			306	CORD REEL - AUTO. TECH. D8	20	1	8	8
9	9	20	1	CORD REEL - AUTO. TECH. D8	306		612		306	CORD REEL - AUTO. TECH. D8	20	1	10	10
11	11	20	1	CORD REEL - AUTO. TECH. D8	306			612	306	CORD REEL - AUTO. TECH. D8	20	1	12	12
13	13	20	1	CORD REEL - AUTO. TECH. D8	306	576			270	EXTERIOR CORD REEL - BUILDING 'E'	20	1	14	14
15	15	20	1	EXTERIOR CORD REEL - BUILDING 'E'	270		540		270	EXTERIOR CORD REEL - BUILDING 'E'	20	1	16	16
17	17	20	1	EXTERIOR CORD REEL - BUILDING 'E'	270			540	270	EXTERIOR CORD REEL - BUILDING 'E'	20	1	18	18
19	19	20	1	EXTERIOR CORD REEL - BUILDING 'E'	270	270			0	SPARE	20	1	20	20
21	21	20	1	RECPT. LAPTOP CART - COMPUTER LAB D13	360		360		0	SPARE	20	1	22	22
23	23	20	1	SPARE	0			0	0	SPARE	20	1	24	24
25	25	20	1	SPARE	0	0			0	SPARE	20	1	26	26
27	27	20	1	SPARE	0		0		0	SPARE	20	1	28	28
29	29	20	1	SPARE	0			0	0	SPARE	20	1	30	30
31	31	20	1	SPARE	0	0			0	SPARE	20	1	32	32
33	33	20	1	SPARE	0		0		0	SPARE	20	1	34	34
35	35	20	1	SPARE	0			0	0	SPARE	20	1	36	36
37	37	20	1	SPARE	0	0			0	SPARE	20	1	38	38
39	39	20	1	SPARE	0		0		0	SPARE	20	1	40	40
41	41	20	1	SPARE	0			0	0	SPARE	20	1	42	42
				TOTAL CONNECTED LOAD (VA) :		2070	2124	1764						
				25% LCL/LML (VA) :		0	0	0						
				TOTAL CALCULATED LOAD (VA) :		2070	2124	1764	TOTAL CALCULATED LOAD FOR PANEL:					
				TOTAL CALCULATED LOAD (AMPS) :		17.3	17.7	14.7	5958 VA					

PANEL: 'R1E'

200 AMP BUS | 120/208V, 3 PH, 4 W | 100% RATED NEUTRAL | MAIN: 125A CB | TRIP: THERMAL-MAGNETIC | A.I.C.: 14000 A | LOCATION: INDUSTRIAL AUTOMATION TECH. - E1 | MOUNTING: SURFACE PER 11/E600 | ENCLOSURE: NEMA 1

NEW PANELBOARD

CIRCUIT CKT NO.	CIRCUIT PNL SPACE	BREAKER AMP	BREAKER POLE	SERVES	VOLT-AMPERES LOAD	A	B	C	LOAD	SERVES	BREAKER AMP	BREAKER POLE	CIRCUIT PNL SPACE	CIRCUIT CKT NO.
1	1	20	1	CORD REEL - IND AUTO 'E1'	270	540			270	CORD REEL - IND AUTO 'E1'	20	1	2	2
3	3	20	1	CORD REEL - IND AUTO 'E1'	270		540		270	CORD REEL - IND AUTO 'E1'	20	1	4	4
5	5	20	1	CORD REEL - IND AUTO 'E1'	270			540	270	CORD REEL - IND AUTO 'E1'	20	1	6	6
7	7	20	1	CORD REEL - IND AUTO 'E1'	270	540			270	CORD REEL - IND AUTO 'E1'	20	1	8	8
9	9	20	1	CORD REEL - IND AUTO 'E1'	270		540		270	CORD REEL - IND AUTO 'E1'	20	1	10	10
11	11	20	1	CORD REEL - IND AUTO 'E1'	270			540	270	CORD REEL - IND AUTO 'E1'	20	1	12	12
13	13	20	1	FANUC LR MATE ROBOT - EQ707	1560	2280			720	RECPT. SO. WALL - IND. AUTO. ROBOT. E4	20	1	14	14
15	15	20	1	AMETRAL PEGASUS - EQ709	1440		1980		540	RECPT. NO. WALL - IND. AUTO. ROBOT. E4	20	1	16	16
17	17	20	1	FUTURE ROBOT - EQ710	0			360	360	RECPT. - STORAGE E3	20	1	18	18
19	19	20	1	FUTURE ROBOT - EQ710	0	1260			1260	RECPT. - OFFICE E2	20	1	20	20
21	21	20	1	LAPTOP CART - IND. AUTO. E1	360		1080		720	RECPT. TEACH WALL - IND. AUTO. TECH. E1	20	1	22	22
23	23	20	1	EXTERIOR CORD REEL - BUILDING 'E'	540			540	0	SPARE	20	1	24	24
25	25	20	1	EXTERIOR CORD REEL - BUILDING 'E'	540	2005			1465				26	26
27	27	20	1	FIRE RISER ELECTRIC BELL	100		1565		1465	CORD REEL - IND AUTO 'E1'	20	3	28	28
29	29	20	1	SPARE	0			1465	1465				30	30
31	31	20	1	SPARE	0	1465			1465				32	32
33	33	20	1	SPARE	0		1465		1465	CORD REEL - IND AUTO 'E1'	20	3	34	34
35	35	20	1	SPARE	0			1465	1465				36	36
37	37	20	1	SPARE	0	1465			1465				38	38
39	39	20	1	SPARE	0		1465		1465	CORD REEL - IND AUTO 'E1'	20	3	40	40
41	41	20	1	SPARE	0			1465	1465				42	42
				TOTAL CONNECTED LOAD (VA) :		9555	8635	6375						
				25% LCL/LML (VA) :		390	0	0						
				TOTAL CALCULATED LOAD (VA) :		9945	8635	6375	TOTAL CALCULATED LOAD FOR PANEL:					
				TOTAL CALCULATED LOAD (AMPS) :		82.9	72.0	53.1	24956 VA					

PANEL: 'R2E'

200 AMP BUS | 120/208V, 3 PH, 4 W | 100% RATED NEUTRAL | MAIN: 200A CB | TRIP: THERMAL-MAGNETIC | A.I.C.: 14000 A | LOCATION: AGRICULTURAL MECHANICS - E11 | MOUNTING: SURFACE PER 11/E600 | ENCLOSURE: NEMA 1

NEW PANELBOARD

CIRCUIT CKT NO.	CIRCUIT PNL SPACE	BREAKER AMP	BREAKER POLE	SERVES	VOLT-AMPERES LOAD	A	B	C	LOAD	SERVES	BREAKER AMP	BREAKER POLE	CIRCUIT PNL SPACE	CIRCUIT CKT NO.
1	1	15	2	HORIZONTAL BAND SAW, EQ304- AG. MECH. STOR. 'E9'	832	1373			541				2	2
3	3				832		1373		541	DRILL PRESS, EQ306 - AG. MECH. E11	15	3	4	4
5	5	20	1	GRINDING WHEEL, EQ313 - AG. MECH. E11	1656			2197	541				6	6
7	7	20	1	GRINDING WHEEL, EQ313 - AG. MECH. E11	1656	2197			541				8	8
9	9	20	1	BUFFING WHEEL, EQ314 - AG. MECH. E11	1656		2197		541	DRILL PRESS, EQ306 - AG. MECH. E11	15	3	10	10
11	11	20	1	WIRE WHEEL, EQ315- AG. MECH. E11	1656			2197	541				12	12
13	13	40	1	BELT SANDER, EQ316 - AG. MECH. E11	2400	7324			4924				14	14
15	15	20	1	FLOOR BOX - AG. MECH. E11	360		5284		4924	PLASMA CUTTER, EQ311a - AG. MECH. E11	50	3	16	16
17	17	30	2	AQUEOUS PARTS WASHER, EQ114	2496			7420	4924				18	18
19	19				2496	4296			1800	PLASMA CUTTER, EQ311b - AG. MECH. E11	20	1	20	20
21	21	20	1	SPARE	0		1040		1040	LATHE, EQ307 - AG. MECH. E11	20	2	22	22
23	23	20	1	SPARE	0			1040	1040				24	24
25	25	20	1	SPARE	0	0			0	SPARE	20	1	26	26
27	27	20	1	SPARE	0		0		0	SPARE	20	1	28	28
29	29	20	1	SPARE	0			0	0	SPARE	20	1	30	30
31	31	20	1	SPARE	0	0			0	SPARE	20	1	32	32
33	33	20	1	SPARE	0		0		0	SPARE	20	1	34	34
35	35	20	1	SPARE	0			0	0	SPARE	20	1	36	36
37	37	20	1	SPARE	0	0			0	SPARE	20	1	38	38
39	39	20	1	SPARE	0		0		0	SPARE	20	1	40	40
41	41	20	1	SPARE	0			0	0	SPARE	20	1	42	42
				TOTAL CONNECTED LOAD (VA) :		15189	9893	12853						
				25% LCL/LML (VA) :		600	260	260						
				TOTAL CALCULATED LOAD (VA) :		15789	10153	13113	TOTAL CALCULATED LOAD FOR PANEL:					
				TOTAL CALCULATED LOAD (AMPS) :		131.6	84.6	109.3	39056 VA					

PANEL: 'R3E'

200 AMP BUS | 120/208V, 3 PH, 4 W | 100% RATED NEUTRAL | MAIN: 100A CB | TRIP: THERMAL-MAGNETIC | A.I.C.: 14000 A | LOCATION: AGRICULTURAL MECHANICS - E11 | MOUNTING: SURFACE PER 11/E600 | ENCLOSURE: NEMA 1

NEW PANELBOARD

CIRCUIT CKT NO.	CIRCUIT PNL SPACE	BREAKER AMP	BREAKER POLE	SERVES	VOLT-AMPERES LOAD	A	B	C	LOAD	SERVES	BREAKER AMP	BREAKER POLE	CIRCUIT PNL SPACE	CIRCUIT CKT NO.
1	1	20	1	CORD REELS - AG. MECH. 'E11'	270	540			270	CORD REELS - AG. MECH. 'E11'	20	1	2	2
3	3	20	1	CORD REELS - AG. MECH. 'E11'	270		540		270	CORD REELS - AG. MECH. 'E11'	20	1	4	4
5	5	20	1	CORD REELS - AG. MECH. 'E11'	270			540	270	CORD REELS - AG. MECH. 'E11'	20	1	6	6
7	7	20	1	CORD REELS - AG. MECH. 'E11'	540	810			270	CORD REELS - AG. MECH. 'E11'	20	1	8	8
9	9	20	1	CORD REELS - AG. MECH. 'E11'	270		540		270	CORD REELS - AG. MECH. 'E11'	20	1	10	10
11	11	20	1	CORD REELS - AG. MECH. 'E11'	270			540	270	CORD REELS - AG. MECH. 'E11'	20	1	12	12
13	13	20	1	CORD REELS - AG. MECH. 'E11'	270	540			270	CORD REELS - AG. MECH. 'E11'	20	1	14	14
15	15	20	1	CORD REELS - AG. MECH. 'E11'	270		540		270	CORD REELS - AG. MECH. 'E11'	20	1	16	16
17	17	20	1	CORD REELS - AG. MECH. 'E11'	270			540	270	CORD REELS - AG. MECH. 'E11'	20	1	18	18
19	19	20	1	CORD REELS - AG. MECH. 'E11'	270	270			0	SPARE	20	1	20	20
21	21	20	1	SPARE	0		0		0	SPARE	20	1	22	22
23	23	20	1	SPARE	0			0	0	SPARE	20	1	24	24
25	25	20	1	SPARE	0	0			0	SPARE	20	1	26	26
27	27	20	1	SPARE	0		0		0	SPARE	20	1	28	28
29	29	20	1	SPARE	0			0	0	SPARE	20	1	30	30
31	31	20	1	SPARE	0	0			0	SPARE	20	1	32	32
33	33	20	1	RECPT. - STORAGE E7	900		900		0	SPARE	20	1	34	34
35	35	20	1	RECPT. - OFFICE E5	900			900	0	SPARE	20	1	36	36
37	37	20	1	RECPT. - OFFICE E6	900	1080			180	RECPT. NO. WEST - AG. MECH E11	20	1	38	38
39	39	20	1	RECPT. SO. WALL - AG. MECH. E11	540		1080		540	RECPT. EAST WALL - AG. MECH. E11	20	1	40	40
41	41	20	1	RECPT. TEACH WALL - AG. MECH. E11	360			1080	720	RECPT. - ELEC. E9, COMP. E8, MECH. PLAT. E21	20	1	42	42
				TOTAL CONNECTED LOAD (VA) :		3240	3600	3600						
				25% LCL/LML (VA) :		0	0	0						
				TOTAL CALCULATED LOAD (VA) :		3240	3600	3600	TOTAL CALCULATED LOAD FOR PANEL:					
				TOTAL CALCULATED LOAD (AMPS) :		27.0	30.0	30.0	10440 VA					

PANEL: 'R2F'

200 AMP BUS | 120/208V, 3 PH, 4 W | 100% RATED NEUTRAL | MAIN: 125A CB | TRIP: THERMAL-MAGNETIC | A.I.C.: 14000 A | LOCATION: INDUSTRIAL MAINTENANCE LAB - F19 | MOUNTING: SURFACE PER 11/E600 | ENCLOSURE: NEMA 1

NEW PANELBOARD

CIRCUIT CKT NO.	CIRCUIT PNL SPACE	BREAKER AMP	BREAKER POLE	SERVES	VOLT-AMPERES LOAD	A	B	C	LOAD	SERVES	BREAKER AMP	BREAKER POLE	CIRCUIT PNL SPACE	CIRCUIT CKT NO.
1	1	20	1	CORD REELS - IND. MAIN. LAB 'F19'	540	1080			540	CORD REELS - IND. MAIN. LAB 'F19'	20	1	2	2
3	3	20	1	CORD REELS - IND. MAIN. LAB 'F19'	540		810		270	CORD REELS - IND. MAIN. LAB 'F19'	20	1	4	4
5	5	20	1	CORD REELS - IND. MAIN. LAB 'F19'	540			1080	540	CORD REELS - IND. MAIN. LAB 'F19'	20	1	6	6
7	7	20	1	CORD REELS - IND. MAIN. LAB 'F19'	270	540			270	CORD REELS - IND. MAIN. LAB 'F19'	20	1	8	8
9	9	20	1	CORD REELS - IND. MAIN. LAB 'F19'	270		270		0	SPARE	20	1	10	10
11	11	20	1	EXTERIOR CORD REELS	540			1080	540	EXTERIOR CORD REELS	20	1	12	12
13	13	20	1	EXTERIOR CORD REELS	540	540			0	ELECTRIC DRYER - JANITOR 'F24'	30	2	14	14
15	15	20	1	SPARE	0		0		0				16	16
17	17	20	1	FIRE SMOKE DAMPER	50			1490	1440	RECPT. - MEETING, 'F29'	20	1	18	18
19	19	20	1	RECPT. - STORAGE F16	540	900			360	RECPT. - MEETING, 'F29'	20	1	20	20
21	21	20	1	RECPT. - STORAGE F16	540		1620		1080	RECPT. FLOOR BOX - CLASSROOM F26	20	1	22	22
23	23	20	1	RECPT. SO. EAST WALL - IND. MAIN F19	360			1440	1080	RECPT. FLOOR BOX - CLASSROOM F26	20	1	24	24
25	25	20	1	RECPT. TEACH WALL - IND. MAIN. F19	540	1620			1080	RECPT. FLOOR BOX - CLASSROOM F26	20	1	26	26
27	27	20	1	RECPT. - ASSISTANT/PRINT/COPY F28	720		1800		1080	RECPT. FLOOR BOX - CLASSROOM F26	20	1	28	28
29	29	20	1	RECPT. - ASSISTANT/PRINT/COPY F28	180			540	360	RECPT. PRINTER/COPIER - CLSRM F26	20	1	30	30
31	31	20	1	RECPT. - ASSISTANT/PRINT/COPY F28	1080	1440			360	RECPT. LAPTOP CART - CLSRM F26	20	1	32	32
33	33	20	1	RECPT. - ASSISTANT/PRINT/COPY F28	720		1260		540	RECPT. PROJ, AV WALL - CLSRM F26	20	1	34	34
35	35	20	1	RECPT. - DEAN'S OFFICE F27	1440			2160	720	RECPT. NORTH - CLASSROOM F26	20	1	36	36
37	37	20	1	RECPT. - IND. MAIN. LAB F19	720	1620			900	RECPT. - MEN F23 & WOMEN F25	20	1	38	38
39	39	20	1	RECPT. - OFFICE F20	1080		1440		360	RECPT. - JANITOR F24	20	1	40	40
41	41	20	1	RECPT. - OFFICE F21	1080			1620	540	TRP PRMR / SF-F4 / AC-2 TNK DRAIN	20	1	42	42
				TOTAL CONNECTED LOAD (VA) :		7740	7200	9410						
				25% LCL/LML (VA) :		0	0	0						
				TOTAL CALCULATED LOAD (VA) :		7740	7200	9410	TOTAL CALCULATED LOAD FOR PANEL:					
				TOTAL CALCULATED LOAD (AMPS) :		64.5	60.0	78.4	24350 VA					

PANEL: 'R3F'

200 AMP BUS | 120/208V, 3 PH, 4 W | 100% RATED NEUTRAL | MAIN: 100A CB | TRIP: THERMAL-MAGNETIC | A.I.C.: 14000 A | LOCATION: ENVIRONMENTAL CONTROLS LAB - F10 | MOUNTING: SURFACE PER 11/E600 | ENCLOSURE: NEMA 1

NEW PANELBOARD

CIRCUIT CKT NO.	CIRCUIT PNL SPACE	BREAKER AMP	BREAKER POLE	SERVES	VOLT-AMPERES LOAD	A	B	C	LOAD	SERVES	BREAKER AMP	BREAKER POLE	CIRCUIT PNL SPACE	CIRCUIT CKT NO.
1	1	20	1	SPARE	0	360			360	RECPT. FLOOR BOX - ENV. CNTRL F10	20	1	2	2
3	3	20	1	SPARE	0		360		360	RECPT. FLOOR BOX - ENV. CNTRL F11	20	1	4	4
5	5	20	1	SPARE	0			360	360	RECPT. FLOOR BOX - ENV. CNTRL F12	20	1	6	6
7	7	20	1	SPARE	0	1596			1596	GRINDER, EQ407 - ENV. CNTRL F10	20	1	8	8
9	9	20	1	SPARE	0		1596		1596	BUFFER/WIRE, EQ406 - ENV. CNTRL F10	20	1	10	10
11	11	20	1	SPARE	0			1920	1920	DRILL PRESS, EQ408 - ENV. CNTRL F10	20	1	12	12
13	13	20	1	SPARE	0	0			0	SPARE	20	1	14	14
15	15	20	1	SPARE	0		0		0	SPARE	20	1	16	16
17	17	20	1	SPARE	0			0	0	SPARE	20	1	18	18
19	19	20	1	SPARE	0	0			0	SPARE	20	1	20	20
21	21	20	1	SPARE	0		0		0	SPARE	20	1	22	22
23	23	20	1	SPARE	0			0	0	SPARE	20	1	24	24
25	25	20	1	SPARE	0	0			0	SPARE	20	1	26	26
27	27	20	1	SPARE	0		0		0	SPARE	20	1	28	28
29	29	20	1	SPARE	0			0	0	SPARE	20	1	30	30
31	31	20	1	SPARE	0	0			0	SPARE	20	1	32	32
33	33	20	1	SPARE	0		0		0	SPARE	20	1	34	34
35	35	20	1	SPARE	0			0	0	SPARE	20	1	36	36
37	37	20	1	SPARE	0	0			0	SPARE	20	1	38	38
39	39	20	1	SPARE	0		0		0	SPARE	20	1	40	40
41	41	20	1	SPARE	0			0	0	SPARE	20	1	42	42
				TOTAL CONNECTED LOAD (VA) :		1956	1956	2280						
				25% LCL/LML (VA) :		0	0	480						
				TOTAL CALCULATED LOAD (VA) :		1956	1956	2760	TOTAL CALCULATED LOAD FOR PANEL:					
				TOTAL CALCULATED LOAD (AMPS) :		16.3	16.3	23.0	6672 VA					

PANEL: 'R4F'

200 AMP BUS | 120/208V, 3 PH, 4 W | 100% RATED NEUTRAL | MAIN: 200A CB | TRIP: THERMAL-MAGNETIC | A.I.C.: 14000 A | LOCATION: ENVIRONMENTAL CONTROLS LAB - F10 | MOUNTING: SURFACE PER 11/E600 | ENCLOSURE: NEMA 1

NEW PANELBOARD

CIRCUIT CKT NO.	CIRCUIT PNL SPACE	BREAKER AMP	BREAKER POLE	SERVES	VOLT-AMPERES LOAD	A	B	C	LOAD	SERVES	BREAKER AMP	BREAKER POLE	CIRCUIT PNL SPACE	CIRCUIT CKT NO.
1	1	20	1	CORD REELS - ENV. CNTRL LAB 'F10'	270	540			270	CORD REELS - ENV. CNTRL LAB 'F10'	20	1	2	2
3	3	20	1	CORD REELS - ENV. CNTRL LAB 'F10'	270		270		0	SPARE	20	1	4	4
5	5	20	1	CORD REELS - ENV. CNTRL LAB 'F10'	270			540	270	CORD REELS - ENV. CNTRL LAB 'F10'	20	1	6	6
7	7	20	1	CORD REELS - ENV. CNTRL LAB 'F10'	270	540			270	CORD REELS - ENV. CNTRL LAB 'F10'	20	1	8	8
9	9	20	1	CORD REELS - ENV. CNTRL LAB 'F10'	270		270		0	SPARE	20	1	10	10
11	11	20	1	CORD REELS - ENV. CNTRL LAB 'F10'	540			1080	540	CORD REELS - ENV. CNTRL LAB 'F10'	20	1	12	12
13	13	20	1	CORD REELS - ENV. CNTRL LAB 'F10'	270	810			540	CORD REELS - ENV. CNTRL LAB 'F10'	20	1	14	14
15	15	20	1	CORD REELS - ENV. CNTRL LAB 'F10'	540		1080		540	EXTERIOR CORD REELS - BUILDING F	20	1	16	16

\\tet-file1\Users\corey.stone\Documents\12032-E-COS Tulare CTE_corey.stone.rvt

PANEL: 'ED'

NEW PANELBOARD — 600 AMP BUS, 120/240V, 3PH, 4W (DELTA CONNECTED), 100% RATED NEUTRAL — MAIN: 400A CB — TRIP: THERMAL-MAGNETIC — A.I.C.: 22000 A — LOCATION: AUTOMOTIVE TECHNOLOGY - D8 — MOUNTING: SURFACE PER 11/E600 — ENCLOSURE: NEMA 1

CIRCUIT CKT NO.	CIRCUIT PNL SPACE	BREAKER AMP	BREAKER POLE	SERVES	VOLT-AMPERES LOAD	A	B	C	LOAD	SERVES	BREAKER AMP	BREAKER POLE	CIRCUIT PNL SPACE	CIRCUIT CKT NO.
1	1	15	2	COMPRESSOR DRYER 'AC-2'	828	2928			2100	EMISSIONS TEST RACK 'EQ106a'	20	2	2	2
3	3				828		2928		2100				4	4
5	5	70	2	MOBILE WELDER CORD REEL 'EQ115'	6096			12192	6096	MOBILE WELDER CORD REEL 'EQ115'	70	2	6	6
7	7				6096	12192			6096				8	8
9	9	70	2	MOBILE WELDER CORD REEL 'EQ115'	6096		12192		6096	MOBILE WELDER CORD REEL 'EQ115'	70	2	10	10
11	11				6096			12192	6096				12	12
13	13	70	2	MOBILE WELDER CORD REEL 'EQ115'	6096	12192			6096	MOBILE WELDER CORD REEL 'EQ115'	70	2	14	14
15	15				6096		12192		6096				16	16
17	17	70	2	MOBILE WELDER CORD REEL 'EQ115'	6096			6936	840	TIRE CHANGER - EQ108	15	2	18	18
19	19				6096	6936			840				20	20
21	21	20	2	FUTURE BRAKE LATHE - EQ110a	0		1200		1200	TIRE BALANCER - EQ111	15	2	22	22
23	23				0			1200	1200				24	24
25	25	20	1	SPARE	0	1200			1200	TIRE BALANCER - EQ111	15	2	22	26
27	27			"DO NOT USE" (2)	0		1200		1200				24	28
29	29	20	1	SPARE	0			6096	6096	MOBILE WELDER CORD REEL 'EQ115'	70	2	30	30
31	31	20	1	SPARE	0	6096			6096				32	32
33	33			"DO NOT USE" (2)	0		6096		6096	MOBILE WELDER CORD REEL 'EQ115'	70	2	34	34
35	35	20	1	SPARE	0			6096	6096				36	36
37	37	20	1	SPARE	0	0			0	SPARE	20	1	38	38
39	39			"DO NOT USE" (2)	0		0		0	"DO NOT USE" (2)			40	40
41	41	20	1	SPARE	0			0	0	SPARE	20	1	42	42
				TOTAL CONNECTED LOAD (VA) :		41544	35808	44712						
				25% LCL/LML (VA) :		525	525	0						
				TOTAL CALCULATED LOAD (VA) :		42069	36333	44712	TOTAL CALCULATED LOAD FOR PANEL:					
				TOTAL CALCULATED LOAD (AMPS) :		350.6	302.8	372.6	123114 VA					

PANEL SCHEDULE NOTES:

(1) PHASE B IS HIGH-LIGHTED TO INDICATE THAT IT IS THE HIGH-LEG OF A 3-PHASE, 4-WIRE, DELTA-CONNECTED SYSTEM. CONDUCTOR COLOR CODING AND PHASE ARRANGEMENT SHALL BE IN ACCORDANCE WITH 2019 CEC ARTICLES 110.15, 408.3[E][1] & 408.3[F].
(2) SINGLE PHASE LOADS SHALL NOT BE CONNECTED TO THE B-PHASE OF THIS PANEL. FIELD APPLY PERMANENT LABEL INDICATING "CAUTION B-PHASE HAS 208V TO GROUND".

PANEL: 'E1E'

NEW PANELBOARD — 200 AMP BUS, 120/240V, 3PH, 4W (DELTA CONNECTED), 100% RATED NEUTRAL — MAIN: 200A CB — TRIP: THERMAL-MAGNETIC — A.I.C.: 22000 A — LOCATION: AGRICULTURAL MECHANICS - E11 — MOUNTING: SURFACE PER 11/E600 — ENCLOSURE: NEMA 1

CIRCUIT CKT NO.	CIRCUIT PNL SPACE	BREAKER AMP	BREAKER POLE	SERVES	VOLT-AMPERES LOAD	A	B	C	LOAD	SERVES	BREAKER AMP	BREAKER POLE	CIRCUIT PNL SPACE	CIRCUIT CKT NO.
1	1	15	2	COMPRESSOR DRYER 'AC-1'	828	2934			2106				2	2
3	3				828		2934		2106	CUT OFF SAW, EQ305 - AG. MECH. E11	30	3	4	4
5	5	20	2	AG MECH TABLE CORD REEL				2106	2106				6	6
7	7					5002			5002				8	8
9	9	20	2	AG MECH TABLE CORD REEL			5002		5002	EXTERIOR WELDER CORD REEL 'EQ309' & 'EQ310'	50	3	10	10
11	11							5002	5002				12	12
13	13	20	2	AG MECH TABLE CORD REEL		6096			6096	EXTERIOR WELDER CORD REEL 'EQ308'	70	2	14	14
15	15						6096		6096				16	16
17	17	20	2	AG MECH TABLE CORD REEL				1330	1330				18	18
19	19					1330			1330	SHEAR, EQ318 - AG. MECH. E11	20	3	20	20
21	21	20	2	AG MECH TABLE CORD REEL			1330		1330				22	22
23	23							0	0	SPARE	20	1	24	24
25	25	20	2	AG MECH TABLE CORD REEL		0			0	SPARE	20	1	26	26
27	27						0		0	"DO NOT USE" (2)			28	28
29	29	20	2	AG MECH TABLE CORD REEL				0	0	SPARE	20	1	30	30
31	31					0			0	SPARE	20	1	32	32
33	33	20	2	AG MECH TABLE CORD REEL			0		0	"DO NOT USE" (2)			34	34
35	35							0	0	SPARE	20	1	36	36
37	37	20	2	AG MECH TABLE CORD REEL		0			0	SPARE	20	1	38	38
39	39						0		0	"DO NOT USE" (2)			40	40
41	41	20	1	SPARE	0			0	0	SPARE	20	1	42	42
				TOTAL CONNECTED LOAD (VA) :		15363	15363	8439						
				25% LCL/LML (VA) :		527	527	527						
				TOTAL CALCULATED LOAD (VA) :		15889	15889	8965	TOTAL CALCULATED LOAD FOR PANEL:					
				TOTAL CALCULATED LOAD (AMPS) :		132.4	132.4	74.7	40743 VA					

PANEL SCHEDULE NOTES:

(1) PHASE B IS HIGH-LIGHTED TO INDICATE THAT IT IS THE HIGH-LEG OF A 3-PHASE, 4-WIRE, DELTA-CONNECTED SYSTEM. CONDUCTOR COLOR CODING AND PHASE ARRANGEMENT SHALL BE IN ACCORDANCE WITH 2019 CEC ARTICLES 110.15, 408.3[E][1] & 408.3[F].
(2) SINGLE PHASE LOADS SHALL NOT BE CONNECTED TO THE B-PHASE OF THIS PANEL. FIELD APPLY PERMANENT LABEL INDICATING "CAUTION B-PHASE HAS 208V TO GROUND".

PANEL: 'E2E'

NEW PANELBOARD — 200 AMP BUS, 120/240V, 3PH, 4W (DELTA CONNECTED), 100% RATED NEUTRAL — MAIN: 200A CB — TRIP: THERMAL-MAGNETIC — A.I.C.: 22000 A — LOCATION: INDUSTRIAL AUTOMATION TECH. - E1 — MOUNTING: SURFACE PER 11/E600 — ENCLOSURE: NEMA 1

CIRCUIT CKT NO.	CIRCUIT PNL SPACE	BREAKER AMP	BREAKER POLE	SERVES	VOLT-AMPERES LOAD	A	B	C	LOAD	SERVES	BREAKER AMP	BREAKER POLE	CIRCUIT PNL SPACE	CIRCUIT CKT NO.
1	1				1386	2771			1386				2	2
3	3	20	3	TRAINING BOARDS - IND. AUTO. TECH. 'EQ705'	1386		2771		1386	TRAINING BOARDS - IND. AUTO. TECH. 'EQ705'	20	3	4	4
5	5				1386			2771	1386				6	6
7	7				1386	2771			1386				8	8
9	9	20	3	TRAINING BOARDS - IND. AUTO. TECH. 'EQ705'	1386		2771		1386	TRAINING BOARDS - IND. AUTO. TECH. 'EQ705'	20	3	10	10
11	11				1386			2771	1386				12	12
13	13				1386	2771			1386				14	14
15	15	20	3	TRAINING BOARDS - IND. AUTO. TECH. 'EQ705'	1386		2771		1386	TRAINING BOARDS - IND. AUTO. TECH. 'EQ705'	20	3	16	16
17	17				1386			2771	1386				18	18
19	19				1386	2771			1386				20	20
21	21	20	3	TRAINING BOARDS - IND. AUTO. TECH. 'EQ705'	1386		2771		1386	TRAINING BOARDS - IND. AUTO. TECH. 'EQ705'	20	3	22	22
23	23				1386			2771	1386				24	24
25	25				1386	2771			1386				26	26
27	27	20	3	TRAINING BOARDS - IND. AUTO. TECH. 'EQ705'	1386		2771		1386	TRAINING BOARDS - IND. AUTO. TECH. 'EQ705'	20	3	28	28
29	29				1386			2771	1386				30	30
31	31				1386	2771			1386				32	32
33	33	20	3	TRAINING BOARDS - IND. AUTO. TECH. 'EQ705'	1386		2771		1386	TRAINING BOARDS - IND. AUTO. TECH. 'EQ705'	20	3	34	34
35	35				1386			2771	1386				36	36
37	37	20	1	SPARE	0	1200			1200	FANUC ARC MATE ROBOT - IND. AUTO. ROBOTICS - 'EQ708'	20	2	38	38
39	39			"DO NOT USE" (2)	0		1200		1200				40	40
41	41	20	1	SPARE	0			0	0	SPARE	20	1	42	42
				TOTAL CONNECTED LOAD (VA) :		17828	17828	16628						
				25% LCL/LML (VA) :		0	0	0						
				TOTAL CALCULATED LOAD (VA) :		17828	17828	16628	TOTAL CALCULATED LOAD FOR PANEL:					
				TOTAL CALCULATED LOAD (AMPS) :		148.6	148.6	138.6	52283 VA					

PANEL SCHEDULE NOTES:

(1) PHASE B IS HIGH-LIGHTED TO INDICATE THAT IT IS THE HIGH-LEG OF A 3-PHASE, 4-WIRE, DELTA-CONNECTED SYSTEM. CONDUCTOR COLOR CODING AND PHASE ARRANGEMENT SHALL BE IN ACCORDANCE WITH 2019 CEC ARTICLES 110.15, 408.3[E][1] & 408.3[F].
(2) SINGLE PHASE LOADS SHALL NOT BE CONNECTED TO THE B-PHASE OF THIS PANEL. FIELD APPLY PERMANENT LABEL INDICATING "CAUTION B-PHASE HAS 208V TO GROUND".

PANEL: 'E1F'

NEW PANELBOARD — 400 AMP BUS, 120/240V, 3PH, 4W (DELTA CONNECTED), 100% RATED NEUTRAL — MAIN: 300A CB — TRIP: THERMAL-MAGNETIC — A.I.C.: 22000 A — LOCATION: INDUSTRIAL MAINTENANCE LAB - F19 — MOUNTING: SURFACE PER 11/E600 — ENCLOSURE: NEMA 1

CIRCUIT CKT NO.	CIRCUIT PNL SPACE	BREAKER AMP	BREAKER POLE	SERVES	VOLT-AMPERES LOAD	A	B	C	LOAD	SERVES	BREAKER AMP	BREAKER POLE	CIRCUIT PNL SPACE	CIRCUIT CKT NO.
1	1	15	2	COMPRESSOR DRYER 'AC-2'	828	1133			305				2	2
3	3				828		1133		305	MOTOR CONTROL TRAINER, EQ617 - IND. MAIN.LAB F19	15	3	4	4
5	5				305			610	305				6	6
7	7	15	3	MOTOR CONTROL TRAINER, EQ617 - IND. MAIN.LAB F19	305	610			305				8	8
9	9				305		610		305	MOTOR CONTROL TRAINER, EQ617 - IND. MAIN.LAB F19	15	3	10	10
11	11				305			610	305				12	12
13	13	15	3	MOTOR CONTROL TRAINER, EQ617 - IND. MAIN.LAB F19	305	610			305				14	14
15	15				305		610		305	MOTOR CONTROL TRAINER, EQ617 - IND. MAIN.LAB F19	15	3	16	16
17	17				305			610	305				18	18
19	19	15	3	MOTOR CONTROL TRAINER, EQ617 - IND. MAIN.LAB F19	305	305			0				20	20
21	21				305		305		0	HYDRAULIC TRAINER, EQ625 - IND. MAIN.LAB F19	15	3	22	22
23	23	20	1	SPARE	0			0	0				24	24
25	25	20	1	SPARE	0	0			0				26	24
27	27			"DO NOT USE" (2)	0		0		0	HYDRAULIC TRAINER, EQ625 - IND. MAIN.LAB F19	15	3	28	28
29	29	20	1	SPARE	0			0	0				30	30
31	31	20	1	SPARE	0	0			0	SPARE	20	1	32	32
33	33			"DO NOT USE" (2)	0		0		0	"DO NOT USE" (2)			34	34
35	35	20	1	SPARE	0			0	0	SPARE	20	1	36	36
37	37				28970	28970			0	SPARE	20	1	38	38
39	39	300	3	PANEL 'E2F'	19370		19370		0	"DO NOT USE" (2)			40	40
41	41				27530			27530	0	SPARE	20	1	42	42
				TOTAL CONNECTED LOAD (VA) :		31627	22027	29359						
				25% LCL/LML (VA) :		0	0	0						
				TOTAL CALCULATED LOAD (VA) :		31627	22027	29359	TOTAL CALCULATED LOAD FOR PANEL:					
				TOTAL CALCULATED LOAD (AMPS) :		263.6	183.6	244.7	83014 VA					

PANEL SCHEDULE NOTES:

(1) PHASE B IS HIGH-LIGHTED TO INDICATE THAT IT IS THE HIGH-LEG OF A 3-PHASE, 4-WIRE, DELTA-CONNECTED SYSTEM. CONDUCTOR COLOR CODING AND PHASE ARRANGEMENT SHALL BE IN ACCORDANCE WITH 2019 CEC ARTICLES 110.15, 408.3[E][1] & 408.3[F].
(2) SINGLE PHASE LOADS SHALL NOT BE CONNECTED TO THE B-PHASE OF THIS PANEL. FIELD APPLY PERMANENT LABEL INDICATING "CAUTION B-PHASE HAS 208V TO GROUND".

PANEL: 'E2F'

NEW PANELBOARD — 400 AMP BUS, 120/240V, 3PH, 4W (DELTA CONNECTED), 100% RATED NEUTRAL — MAIN: 300A CB — TRIP: THERMAL-MAGNETIC — A.I.C.: 22000 A — LOCATION: INDUSTRIAL MAINTENANCE LAB - F19 — MOUNTING: SURFACE PER 11/E600 — ENCLOSURE: NEMA 1

CIRCUIT CKT NO.	CIRCUIT PNL SPACE	BREAKER AMP	BREAKER POLE	SERVES	VOLT-AMPERES LOAD	A	B	C	LOAD	SERVES	BREAKER AMP	BREAKER POLE	CIRCUIT PNL SPACE	CIRCUIT CKT NO.
1	1				2106	4212			2106				2	2
3	3	30	3	LATHE, EQ613 - IND. MAIN. LAB F19	2106		4212		2106	LATHE, EQ613 - IND. MAIN. LAB F19	30	3	4	4
5	5				2106			4212	2106				6	6
7	7				2106	4212			2106				8	8
9	9	30	3	LATHE, EQ613 - IND. MAIN. LAB F19	2106		4212		2106	LATHE, EQ613 - IND. MAIN. LAB F19	30	3	10	10
11	11				2106			4212	2106				12	12
13	13				2106	4212			2106				14	14
15	15	30	3	LATHE, EQ613 - IND. MAIN. LAB F19	2106		4212		2106	LATHE, EQ613 - IND. MAIN. LAB F19	30	3	16	16
17	17				2106			4212	2106				18	18
19	19				1330	2660			1330				20	20
21	21	20	3	MILLING MACHINE, EQ614 - IND. MAIN. LAB F19	1330		2660		1330	MILLING MACHINE, EQ614 - IND. MAIN. LAB F19	20	3	22	22
23	23				1330			2660	1330				24	24
25	25				2106	2106			0	SPARE	20	1	26	26
27	27	30	3	HORIZONTAL BAND SAW, EQ611 - IND. MAIN. LAB F19	2106		2106		0	"DO NOT USE" (2)			28	28
29	29				2106			6906	4800				30	30
31	31	25	2	VERTICAL BAND SAW, EQ612 - IND. MAIN. LAB F19	1440	6240			4800	CORD REEL - IND. MAIN. LAB F19	50	2	32	32
33	33				1440		1440		0	"DO NOT USE" (2)			34	34
35	35	20	1	SPARE	0			4800	4800				36	36
37	37	20	1	SPARE	0	4800			4800	CORD REEL - IND. MAIN. LAB F19	50	2	38	38
39	39			"DO NOT USE" (2)	0		0		0	"DO NOT USE" (2)			40	40
41	41	20	1	SPARE	0			0	0	SPARE	20	1	42	42
				TOTAL CONNECTED LOAD (VA) :		28444	18844	27004						
				25% LCL/LML (VA) :		527	527	527						
				TOTAL CALCULATED LOAD (VA) :		28970	19370	27530	TOTAL CALCULATED LOAD FOR PANEL:					
				TOTAL CALCULATED LOAD (AMPS) :		241.4	161.4	229.4	75871 VA					

PANEL SCHEDULE NOTES:

(1) PHASE B IS HIGH-LIGHTED TO INDICATE THAT IT IS THE HIGH-LEG OF A 3-PHASE, 4-WIRE, DELTA-CONNECTED SYSTEM. CONDUCTOR COLOR CODING AND PHASE ARRANGEMENT SHALL BE IN ACCORDANCE WITH 2019 CEC ARTICLES 110.15, 408.3[E][1] & 408.3[F].
(2) SINGLE PHASE LOADS SHALL NOT BE CONNECTED TO THE B-PHASE OF THIS PANEL. FIELD APPLY PERMANENT LABEL INDICATING "CAUTION B-PHASE HAS 208V TO GROUND".

PANEL: 'E3F'

NEW PANELBOARD — 200 AMP BUS, 120/240V, 3PH, 4W (DELTA CONNECTED), 100% RATED NEUTRAL — MAIN: 175A CB — TRIP: THERMAL-MAGNETIC — A.I.C.: 22000 A — LOCATION: CONSTRUCTION TECHNOLOGY - F3 — MOUNTING: SURFACE PER 11/E600 — ENCLOSURE: NEMA 1

CIRCUIT CKT NO.	CIRCUIT PNL SPACE	BREAKER AMP	BREAKER POLE	SERVES	VOLT-AMPERES LOAD	A	B	C	LOAD	SERVES	BREAKER AMP	BREAKER POLE	CIRCUIT PNL SPACE	CIRCUIT CKT NO.
1	1				3048	5155			2106				2	2
3	3	45	3	TABLE SAW - CNST. TECH. 'EQ202'	3048		5155		2106	TABLE SAW - CNST. TECH. 'EQ203'	30	3	4	4
5	5				3048			5155	2106				6	6
7	7	20	2	JOINTER - CNST. TECH. 'EQ204'	1200	2028			828	LATHE - CNST. TECH. 'EQ216'	15	2	8	8
9	9				1200		2028		828				10	10
11	11				2106			4212	2106				12	12
13	13	30	3	THICKNESS PLANAR - CNST. TECH. 'EQ205'	2106	4212			2106	BAND SAW - CNST. TECH. 'EQ206'	30	3	14	14
15	15				2106		4212		2106				16	16
17	17				831			1413	582				18	18
19	19	15	3	DISC SANDER - CNST. TECH. 'EQ209'	831	1413			582	SPINDLE SANDER - CNST. TECH. 'EQ213'	15	3	20	20
21	21				831		1413		582				22	22
23	23				1663			1663	0				24	24
25	25	30	3	SHAPER - CNST. TECH. 'EQ214'	1663	1663			0	(FUTURE) EDGE BANDING MACHINE - CNST. TECH. 'EQ218'	40	3	26	26
27	27				1663		1663		0				28	28
29	29	20	1	SPARE	0			0	0	SPARE	20	1	30	30
31	31	20	1	SPARE	0	0			0	SPARE	20	1	32	32
33	33			"DO NOT USE" (2)	0		0		0	"DO NOT USE" (2)			34	34
35	35	20	1	SPARE	0			0	0	SPARE	20	1	36	36
37	37	20	1	SPARE	0				0	SPARE	20	1	38	38
39	39			"DO NOT USE" (2)	0		0		0	"DO NOT USE" (2)			40	40
41	41	20	1	SPARE	0			0	0	SPARE	20	1	42	42
				TOTAL CONNECTED LOAD (VA) :		14471	14471	12443						
				25% LCL/LML (VA) :		762	762	762						
				TOTAL CALCULATED LOAD (VA) :		15233	15233	13205	TOTAL CALCULATED LOAD FOR PANEL:					
				TOTAL CALCULATED LOAD (AMPS) :		126.9	126.9	110.0	43671 VA					

PANEL SCHEDULE NOTES:

(1) PHASE B IS HIGH-LIGHTED TO INDICATE THAT IT IS THE HIGH-LEG OF A 3-PHASE, 4-WIRE, DELTA-CONNECTED SYSTEM. CONDUCTOR COLOR CODING AND PHASE ARRANGEMENT SHALL BE IN ACCORDANCE WITH 2019 CEC ARTICLES 110.15, 408.3[E][1] & 408.3[F].
(2) SINGLE PHASE LOADS SHALL NOT BE CONNECTED TO THE B-PHASE OF THIS PANEL. FIELD APPLY PERMANENT LABEL INDICATING "CAUTION B-PHASE HAS 208V TO GROUND".

PANEL: 'ITD'

NEW PANELBOARD — 100 AMP BUS, 120/208Y, 3 PH, 4 W, 100% RATED NEUTRAL — MAIN: 100A CB — TRIP: THERMAL-MAGNETIC — A.I.C.: 14000 A — LOCATION: COMM. RM. - D12 — MOUNTING: SURFACE PER 11/E600 — ENCLOSURE: NEMA 1

CIRCUIT CKT NO.	CIRCUIT PNL SPACE	BREAKER AMP	BREAKER POLE	SERVES	VOLT-AMPERES LOAD	A	B	C	LOAD	SERVES	BREAKER AMP	BREAKER POLE	CIRCUIT PNL SPACE	CIRCUIT CKT NO.
1	1	20	1	RECPT. - COMM. 'D12'	540	1640			1100	RECPT. - IDF 'D'	20	2	2	2
3	3	20	1	FIRE ALARM CONTROL PANEL	600		1700		1100				4	4
5	5	20	1	SPARE	0			180	180	RECPT. - ELEC. D11	20	1	6	6
7	7	20	1	SPARE	0	0			0	SPARE	20	1	8	8
9	9	20	1	SPARE	0		0		0	SPARE	20	1	10	10
11	11	20	1	SPARE	0			0	0	SPARE	20	1	12	12
13	13	20	1	SPARE	0		0		0	SPARE	20	1	14	14
15	15	20	1	SPARE	0			0	0	SPARE	20	1	16	16
17	17	20	1	SPARE	0			0	0	SPARE	20	1	18	18
19	19	20	1	SPARE	0		0		0	SPARE	20	1	20	20
21	21	20	1	SPARE	0			0	0	SPARE	20	1	22	22
23	23	20	1	SPARE	0			0	0	SPARE	20	1	24	24
25	25	20	1	SPARE	0	0			0	SPARE	20	1	26	26
27	27	20	1	SPARE	0		0		0	SPARE	20	1	28	28
29	29	20	1	SPARE	0			0	0	SPARE	20	1	30	30
31	31	20	1	SPARE	0	0			0	SPARE	20	1	32	32
33	33	20	1	SPARE	0		0		0	SPARE	20	1	34	34
35	35	20	1	SPARE	0			0	0	SPARE	20	1	36	36
37	37	20	1	SPARE	0	0			0	SPARE	20	1	38	38
39	39	20	1	SPARE	0		0		0	SPARE	20	1	40	40
41	41	20	1	SPARE	0			0	0	SPARE	20	1	42	42
				TOTAL CONNECTED LOAD (VA) :		1640	1700	180						
				25% LCL/LML (VA) :		0	0	0						
				TOTAL CALCULATED LOAD (VA) :		1640	1700	180	TOTAL CALCULATED LOAD FOR PANEL:					
				TOTAL CALCULATED LOAD (AMPS) :		13.7	14.2	1.5	3520 VA					

PANEL: 'ITE'

NEW PANELBOARD — 100 AMP BUS, 120/208Y, 3 PH, 4 W, 100% RATED NEUTRAL — MAIN: 100A CB — TRIP: THERMAL-MAGNETIC — A.I.C.: 14000 A — LOCATION: COMM. RM. - E10 — MOUNTING: SURFACE PER 11/E600 — ENCLOSURE: NEMA 1

CIRCUIT CKT NO.	CIRCUIT PNL SPACE	BREAKER AMP	BREAKER POLE	SERVES	VOLT-AMPERES LOAD	A	B	C	LOAD	SERVES	BREAKER AMP	BREAKER POLE	CIRCUIT PNL SPACE	CIRCUIT CKT NO.
1	1	20	1	RECPT. - COMM. 'E10'	360	1460			1100	RECPT. - IDF 'E'	20	2	2	2
3	3	20	1	FIRE ALARM CONTROL PANEL	600		1700		1100				4	4
5	5	20	1	SPARE	0			0	0	SPARE	20	1	6	6
7	7	20	1	SPARE	0	0			0	SPARE	20	1	8	8
9	9	20	1	SPARE	0		0		0	SPARE	20	1	10	10
11	11	20	1	SPARE	0			0	0	SPARE	20	1	12	12
13	13	20	1	SPARE	0	0			0	SPARE	20	1	14	14
15	15	20	1	SPARE	0		0		0	SPARE	20	1	16	16
17	17	20	1	SPARE	0			0	0	SPARE	20	1	18	18
19	19	20	1	SPARE	0	0			0	SPARE	20	1	20	20
21	21	20	1	SPARE	0		0		0	SPARE	20	1	22	22
23	23	20	1	SPARE	0			0	0	SPARE	20	1	24	24
25	25	20	1	SPARE	0	0			0	SPARE	20	1	26	26
27	27	20

\\tet-file1\Users\corey.stone\Documents\12032-E-COS Tulare CTE_corey.stone.rvt

PANEL: 'ACLD'

NEW PANELBOARD — 150 AMP BUS, 120/208V, 3 PH, 4 W, 100% RATED NEUTRAL — MAIN: 150A CB — TRIP: THERMAL-MAGNETIC — A.I.C.: 14000 A — LOCATION: ELEC. RM. - D11 — MOUNTING: SURFACE PER 11/E600 — ENCLOSURE: NEMA 1

CIRCUIT CKT NO.	CIRCUIT PNL SPACE	BREAKER AMP	BREAKER POLE	SERVES	VOLT-AMPERES LOAD	A	B	C	LOAD	SERVES	BREAKER AMP	BREAKER POLE	CIRCUIT PNL SPACE	CIRCUIT CKT NO.
1	1	50	2	OUTDOOR UNIT 'ODU-D1'	3640	7280			3640	OUTDOOR UNIT 'ODU-D2'	50	2	2	2
3	3				3640		7280		3640				4	4
5	5	35	2	OUTDOOR UNIT 'ODU-D3'	1872			1872	0	SPARE	20	1	6	6
7	7				1872	1872			0	SPARE	20	1	8	8
9	9	20	1	SPARE	0		0		0	SPARE	20	1	10	10
11	11	20	1	SPARE	0			0	0	SPARE	20	1	12	12
13	13	25	2	EXHAUST FAN 'EF-D3'	1248	2496			1248	EXHAUST FAN 'EF-D4'	25	2	14	14
15	15				1248		2496		1248				16	16
17	17	15	1	EXHST FAN 'EF-D1', 'EF-D2', SUPPLY FAN 'SF-D1'	327			1647	1320	WTR HTR / TRP PRMR / DRINK FOUNTN	20	1	18	18
19	19	20	1	ROOF RECEPTACLES	720	1188			468	INFRARED RADIANT HEATER	20	1	20	20
21	21	30	1	OVERHEAD DOOR MOTOR	1920		3840		1920	OVERHEAD DOOR MOTOR	30	1	22	22
23	23	30	1	OVERHEAD DOOR MOTOR	1920			3840	1920	OVERHEAD DOOR MOTOR	30	1	24	24
25	25	15	1	EXHAUST FAN 'EF-D6'	95	695			600	WATER HEATER / TRAP PRIMERS	20	1	26	26
27	27	15	1	EXHAUST FAN 'EF-D7'	45		45		0	SPARE	20	1	28	28
29	29	15	1	EXHAUST FAN 'EF-D5'	80			80	0	SPARE	20	1	30	30
31	31	20	1	SPARE	0	0			0	SPARE	20	1	32	32
33	33	20	1	SPARE	0		0		0	SPARE	20	1	34	34
35	35	20	1	SPARE	0			0	0	SPARE	20	1	36	36
37	37	20	1	SPARE	0	0			0	SPARE	20	1	38	38
39	39	20	1	SPARE	0		0		0	SPARE	20	1	40	40
41	41	20	1	SPARE	0			0	0	SPARE	20	1	42	42
				TOTAL CONNECTED LOAD (VA) :		13531	13641	7439						
				25% LCL/LML (VA) :		910	910	0						
				TOTAL CALCULATED LOAD (VA) :		14441	14571	7439	TOTAL CALCULATED LOAD FOR PANEL:					
				TOTAL CALCULATED LOAD (AMPS) :		120.3	121.4	62.0	36451 VA					

PANEL: 'ACLE'

NEW PANELBOARD — 150 AMP BUS, 120/208V, 3 PH, 4 W, 100% RATED NEUTRAL — MAIN: 100A CB — TRIP: THERMAL-MAGNETIC — A.I.C.: 14000 A — LOCATION: ELEC. RM. - E9 — MOUNTING: SURFACE PER 11/E600 — ENCLOSURE: NEMA 1

CIRCUIT CKT NO.	CIRCUIT PNL SPACE	BREAKER AMP	BREAKER POLE	SERVES	VOLT-AMPERES LOAD	A	B	C	LOAD	SERVES	BREAKER AMP	BREAKER POLE	CIRCUIT PNL SPACE	CIRCUIT CKT NO.
1	1	45	2	OUTDOOR UNIT 'ODU-E1'	3120	4992			1872	OUTDOOR UNIT 'ODU-E2'	35	2	2	2
3	3				3120		4992		1872				4	4
5	5	20	1	SPARE	0			0	0	SPARE	20	1	6	6
7	7	20	1	SPARE	0	0			0	SPARE	20	1	8	8
9	9	25	2	EXHAUST FAN 'EF-E1'	1248		1404		156	SUPPLY FAN 'SF-E1'	15	1	10	10
11	11				1248			1394	146	EXHAUST FAN 'EF-E2'	15	1	12	12
13	13	20	1	ROOF RECEPTACLES	360	780			420	WATER HEATER	20	1	14	14
15	15	20	1	SPARE	0		312		312	INFRARED RADIANT HEATER	25	1	16	16
17	17	20	1	SPARE	0			1920	1920	OVERHEAD DOOR MOTOR	30	1	18	18
19	19	20	1	SPARE	0	0			0	SPARE	20	1	20	20
21	21	20	1	SPARE	0		0		0	SPARE	20	1	22	22
23	23	20	1	SPARE	0			0	0	SPARE	20	1	24	24
25	25	20	1	SPARE	0	0			0	SPARE	20	1	26	26
27	27	20	1	SPARE	0		0		0	SPARE	20	1	28	28
29	29	20	1	SPARE	0			0	0	SPARE	20	1	30	30
31	31	20	1	SPARE	0	0			0	SPARE	20	1	32	32
33	33	20	1	SPARE	0		0		0	SPARE	20	1	34	34
35	35	20	1	SPARE	0			0	0	SPARE	20	1	36	36
37	37	20	1	SPARE	0	0			0	SPARE	20	1	38	38
39	39	20	1	SPARE	0		0		0	SPARE	20	1	40	40
41	41	20	1	SPARE	0			0	0	SPARE	20	1	42	42
				TOTAL CONNECTED LOAD (VA) :		5772	6708	3314						
				25% LCL/LML (VA) :		780	780	0						
				TOTAL CALCULATED LOAD (VA) :		6552	7488	3314	TOTAL CALCULATED LOAD FOR PANEL:					
				TOTAL CALCULATED LOAD (AMPS) :		54.6	62.4	27.6	17354 VA					

PANEL: 'ACLF'

NEW PANELBOARD — 200 AMP BUS, 120/208V, 3 PH, 4 W, 100% RATED NEUTRAL — MAIN: 200A CB — TRIP: THERMAL-MAGNETIC — A.I.C.: 14000 A — LOCATION: ELEC. RM. - F18 — MOUNTING: SURFACE PER 11/E600 — ENCLOSURE: NEMA 1

CIRCUIT CKT NO.	CIRCUIT PNL SPACE	BREAKER AMP	BREAKER POLE	SERVES	VOLT-AMPERES LOAD	A	B	C	LOAD	SERVES	BREAKER AMP	BREAKER POLE	CIRCUIT PNL SPACE	CIRCUIT CKT NO.
1	1	45	2	OUTDOOR UNIT 'ODU-F1'	3120	4992			1872	OUTDOOR UNIT 'ODU-F2'	25	2	2	2
3	3				3120		4992		1872				4	4
5	5	15	2	OUTDOOR UNIT 'ODU-F3'	1560			3432	1872	OUTDOOR UNIT 'ODU-F4'	35	2	6	6
7	7				1560	3432			1872				8	8
9	9	25	2	OUTDOOR UNIT 'ODU-F5'	1872		5512		3640	OUTDOOR UNIT 'ODU-F6'	50	2	10	10
11	11				1872			5512	3640				12	12
13	13	25	2	OUTDOOR UNIT 'ODU-F7'	1664	1664			0	SPARE	20	1	14	14
15	15				1664		1664		0	SPARE	20	1	16	16
17	17	15	1	EXHAUST FAN 'EF-F10'	50			590	540	TRP PRMR / SF-F4 / AC-2 TNK DRAIN	20	1	18	18
19	19	20	1	SPARE	0	312			312	SF-F2 / SF - F3	20	1	20	20
21	21	20	1	SPARE	0		1176		1176	EXHAUST FAN 'EF-F2'	20	1	22	22
23	23	20	1	SPARE	0			696	696	EXHAUST FAN 'EF-F3'	15	1	24	24
25	25	20	1	WTR HTR / TRP PRMR / EF-F1 / SF-F1	630	1806			1176	EXHAUST FAN 'EF-F4'	20	1	26	26
27	27	20	1	DRINK FOUNTN / SF-F4 / SF-F5 / EF-F7	1086		2262		1176	EXHAUST FAN 'EF-F5'	20	1	28	28
29	29	20	1	WATER HEATER 'WH-2' / CIRC. PUMP 'CP-1'	627			1323	696	EXHAUST FAN 'EF-F6'	15	1	30	30
31	31	20	1	ROOF RECEPTACLES	1260	2916			1656	EXHAUST FAN 'EF-F8'	25	1	32	32
33	33	20	1	SPARE	0		624		624	INFRARED RADIANT HEATER F10 & F19	20	1	34	34
35	35	20	1	SPARE	0			624	624	INFRARED RADIANT HEATER F3 & F9	20	1	36	36
37	37	20	1	SPARE	0	200			200	DUST COLLECTOR ABORT GATE	20	1	38	38
39	39	20	1	SPARE	0		108		108	EXHAUST FAN 'EF-F9'	15	1	40	40
41	41	20	1	WATER FOUNTAIN 'EDF-1'	370			550	180	RECPT. EMS - ELEC F18	20	1	42	42
				TOTAL CONNECTED LOAD (VA) :		15322	16338	12727						
				25% LCL/LML (VA) :		0	910	910						
				TOTAL CALCULATED LOAD (VA) :		15322	17248	13637	TOTAL CALCULATED LOAD FOR PANEL:					
				TOTAL CALCULATED LOAD (AMPS) :		127.7	143.7	113.6	46207 VA					

PANEL: 'R7F'

NEW PANELBOARD — 200 AMP BUS, 120/208V, 3 PH, 4 W, 100% RATED NEUTRAL — MAIN: 125A CB — TRIP: THERMAL-MAGNETIC — A.I.C.: 14000 A — LOCATION: ELECTRICIAN TRAINING - F9 — MOUNTING: SURFACE PER 11/E600 — ENCLOSURE: NEMA 1

CIRCUIT CKT NO.	CIRCUIT PNL SPACE	BREAKER AMP	BREAKER POLE	SERVES	VOLT-AMPERES LOAD	A	B	C	LOAD	SERVES	BREAKER AMP	BREAKER POLE	CIRCUIT PNL SPACE	CIRCUIT CKT NO.
1	1	80	3	WELDER, EQ501 - EXTERIOR BUILDING 'F'	4804	6004			1201					
3	3				4804		6004		1201	ELECTRICIAN TRAINING BOOTHS, 'F9'	20	3	4	4
5	5				4804			6004	1201				6	6
7	7	20	2	CORD REELS - CONST. TECH. 'F3'	0	1040			1040	ELECTRICIAN TRAINING BOOTHS, 'F9'	20	2	8	8
9	9				0		1040		1040				10	10
11	11	20	1	SPARE	0			0	0	SPARE	20	1	12	12
13	13	20	1	SPARE	0	0			0	SPARE	20	1	14	14
15	15	20	1	SPARE	0		0		0	SPARE	20	1	16	16
17	17	20	1	SPARE	0			0	0	SPARE	20	1	18	18
19	19	20	1	SPARE	0	0			0	SPARE	20	1	20	20
21	21	20	1	SPARE	0		0		0	SPARE	20	1	22	22
23	23	20	1	SPARE	0			0	0	SPARE	20	1	24	24
25	25	20	1	SPARE	0	0			0	SPARE	20	1	26	26
27	27	20	1	SPARE	0		0		0	SPARE	20	1	28	28
29	29	20	1	SPARE	0			0	0	SPARE	20	1	30	30
31	31	20	1	ROOF RECEPTACLES	1260	1260			0	SPARE	20	1	32	32
33	33	30	1	OVERHEAD DOOR MOTOR, 'F3'	1920		1920		0	SPARE	20	1	34	34
35	35	30	1	OVERHEAD DOOR MOTOR, 'F9'	1920			1920	0	SPARE	20	1	36	36
37	37	30	1	OVERHEAD DOOR MOTOR, 'F10'	1920	3180			1260	RECPT. - OFFICE F4	20	1	38	38
39	39	30	1	OVERHEAD DOOR MOTOR, 'F19'	1920		3180		1260	RECPT. - OFFICE F5	20	1	40	40
41	41	20	1	FIRE RISER ELECTRIC BELL	100			1000	900	RECPT. - STORAGE F6, MECH. PLAT F40	20	1	42	42
				TOTAL CONNECTED LOAD (VA) :		11484	12144	8924						
				25% LCL/LML (VA) :		0	480	0						
				TOTAL CALCULATED LOAD (VA) :		11484	12624	8924	TOTAL CALCULATED LOAD FOR PANEL:					
				TOTAL CALCULATED LOAD (AMPS) :		95.7	105.2	74.4	33033 VA					

PANEL: 'FPH'

NEW PANELBOARD — 100 AMP BUS, 120/208V, 3 PH, 4 W, 100% RATED NEUTRAL — MAIN: 100A CB — TRIP: THERMAL-MAGNETIC — A.I.C.: 14000 A — LOCATION: FIRE PUMP HOUSE — MOUNTING: SURFACE PER 21/E600 — ENCLOSURE: NEMA 1

CIRCUIT CKT NO.	CIRCUIT PNL SPACE	BREAKER AMP	BREAKER POLE	SERVES	VOLT-AMPERES LOAD	A	B	C	LOAD	SERVES	BREAKER AMP	BREAKER POLE	CIRCUIT PNL SPACE	CIRCUIT CKT NO.
1	1	20	1	RECEPTACLES - PUMP HOUSE	360	495			135	LIGHTING - PUMP HOUSE	20	2	2	2
3	3	20	1	CONTROLLER	750		1500		750	ELECTRIC BASEBOARD HEATER 'EH-1'	15	1	4	4
5	5	20	1	BATTERY CHARGER	750			1500	750				6	6
7	7	20	1	SPARE	0	100			100	FIRE RISER ELECTRIC BELL	20	1	8	8
9	9	15	1	EXHAUST FAN 'EF-4'	696		696		0	SPARE	20	1	10	10
11	11				817			817	0	SPARE	20	1	12	12
13	13	15	3	JOCKEY PUMP (2HP)	817	817			0	SPARE	20	1	14	14
15	15				817		817		0	SPARE	20	1	16	16
17	17	20	1	SPARE	0			0	0	SPARE	20	1	18	18
19	19	20	1	SPARE	0	0			0	SPARE	20	1	20	20
21	21	20	1	SPARE	0		0		0	SPARE	20	1	22	22
23	23	20	1	SPARE	0			0	0	SPARE	20	1	24	24
				TOTAL CONNECTED LOAD (VA) :		1412	3013	2317						
				25% LCL/LML (VA) :		238	204	204						
				TOTAL CALCULATED LOAD (VA) :		1650	3217	2521	TOTAL CALCULATED LOAD FOR PANEL:					
				TOTAL CALCULATED LOAD (AMPS) :		13.7	26.8	21.0	7387 VA					

PANEL: 'EY'

NEW PANELBOARD — 200 AMP BUS, 120/208V, 3 PH, 4 W, 100% RATED NEUTRAL — MAIN: 175A CB — TRIP: THERMAL-MAGNETIC — A.I.C.: 14000 A — LOCATION: ELECTRICAL YARD — MOUNTING: SURFACE PER 21/E600 — ENCLOSURE: NEMA 3R

CIRCUIT CKT NO.	CIRCUIT PNL SPACE	BREAKER AMP	BREAKER POLE	SERVES	VOLT-AMPERES LOAD	A	B	C	LOAD	SERVES	BREAKER AMP	BREAKER POLE	CIRCUIT PNL SPACE	CIRCUIT CKT NO.
1	1	50	3	ELECTRIC PRESSURE WASHER, EQ001	3038	6076			3038				2	2
3	3				3038		6076		3038	ELECTRIC PRESSURE WASHER, EQ001	50	3	4	4
5	5				3038			6076	3038				6	6
7	7	30	1	ELECTRIC GATE OPERATOR	1440	1620			180	IRRIGATION CONTROLLER	20	1	8	8
9	9	30	1	ELECTRIC GATE OPERATOR	1440		1800		360	RECPT. - ELECTRICAL YARD CABINETS	20	1	10	10
11	11	20	1	RECPT. - EAST POLE LIGHTS	720			1440	720	RECPT. - WEST POLE LIGHTS	20	1	12	12
13	13	20	1	RECPT. - ELECTRICAL YARD	180	360			180	RECPT. - SOUTH SOLAR ARRAY	20	1	14	14
15	15	20	1	RECPT. - HUB CONTROLLER	180		360		180	RECPT. - NORTH SOLAR ARRAY	20	1	16	16
17	17	20	1	SPARE	0			1080	1080	RECPT. - CENTRAL PLAZA	20	1	18	18
19	19	20	1	SPARE	0	0			0	SPARE	20	1	20	20
21	21	20	1	SPARE	0		0		0	SPARE	20	1	22	22
23	23	20	1	SPARE	0			0	0	SPARE	20	1	24	24
25	25	20	1	SPARE	0	0			0	SPARE	20	1	26	26
27	27	20	1	SPARE	0		0		0	SPARE	20	1	28	28
29	29	20	1	SPARE	0			0	0	SPARE	20	1	30	30
31	31	20	1	SPARE	0	0			0	SPARE	20	1	32	32
33	33	20	1	SPARE	0		0		0	SPARE	20	1	34	34
35	35	20	1	SPARE	0			0	0	SPARE	20	1	36	36
37	37	20	1	SPARE	0	0			0	SPARE	20	1	38	38
39	39	20	1	SPARE	0		0		0	SPARE	20	1	40	40
41	41	20	1	SPARE	0			0	0	SPARE	20	1	42	42
				TOTAL CONNECTED LOAD (VA) :		8056	8236	8596						
				25% LCL/LML (VA) :		760	760	760						
				TOTAL CALCULATED LOAD (VA) :		8816	8996	9356	TOTAL CALCULATED LOAD FOR PANEL:					
				TOTAL CALCULATED LOAD (AMPS) :		73.5	75.0	78.0	27168 VA					

BUSWAY: 'BDF'

NEW BUILDING F BUS DUCT — BUS: 300 AMP BUS — VOLTAGE: 240V, 3 PH, 3 W — NEUTRAL: 100% RATED NEUTRAL

A.I.C.: 14000

LOCATION: INDUSTRIAL MAINTENANCE LAB - F19

CIRCUIT CKT NO.	BREAKER AMP	BREAKER POLE	SERVES	VOLT-AMPERES LOAD	A	B	C
1	50	3	STICK WELDER, EQ607 - IND. MAIN. LAB F19	5002	5002		
				5002		5002	
				5002			5002
2	70	2	MIG WELDER, EQ605 - IND. MAIN. LAB F19	6096	6096		
				6096		6096	
3	50	3	STICK WELDER, EQ607 - IND. MAIN. LAB F19	5002			5002
				5002	5002		
				5002		5002	
4	70	2	MIG WELDER, EQ605 - IND. MAIN. LAB F19	6096			6096
				6096	6096		
5	50	3	STICK WELDER, EQ607 - IND. MAIN. LAB F19	5002		5002	
				5002			5002
				5002	5002		
6	70	2	MIG WELDER, EQ605 - IND. MAIN. LAB F19	6096		6096	
				6096			6096
7	50	3	STICK WELDER, EQ607 - IND. MAIN. LAB F19	5002	5002		
				5002			5002
				5002		5002	
8	70	2	MIG WELDER, EQ605 - IND. MAIN. LAB F19	6096	6096		
				6096		6096	
9	50	3	STICK WELDER, EQ607 - IND. MAIN. LAB F19	5002			5002
				5002	5002		
				5002		5002	
10	70	2	MIG WELDER, EQ605 - IND. MAIN. LAB F19	6096			6096
				6096	6096		
11	50	3	STICK WELDER, EQ607 - IND. MAIN. LAB F19	5002		5002	
				5002			5002
				5002	5002		
12	70	2	MIG WELDER, EQ605 - IND. MAIN. LAB F19	6096		6096	
				6096			6096
13	50	3	TIG WELDER, EQ606 - IND. MAIN. LAB F19	5002	5002		
				5002			5002
				5002	5002		
14	50	3	TIG WELDER, EQ606 - IND. MAIN. LAB F19	5002		5002	
				5002			5002
			TOTAL CONNECTED LOAD (VA) :		64401	64401	64401
			25% LCL/LML (VA) :		0	0	0
			TOTAL CALCULATED LOAD (VA) :		64401	64401	64401
			TOTAL CALCULATED LOAD (AMPS) :		536.7	536.7	536.7

PANEL: 'E5F'

NEW PANELBOARD — 400 AMP BUS, 120/240V, 3PH, 4W (DELTA CONNECTED), 100% RATED NEUTRAL — MAIN: 300A CB — TRIP: THERMAL-MAGNETIC — A.I.C.: 22000 A — LOCATION: ELECTRICIAN TRAINING - F9 — MOUNTING: SURFACE PER 11/E600 — ENCLOSURE: NEMA 1

CIRCUIT CKT NO.	CIRCUIT PNL SPACE	BREAKER AMP	BREAKER POLE	SERVES	VOLT-AMPERES LOAD	A	B	C	LOAD	SERVES	BREAKER AMP	BREAKER POLE	CIRCUIT PNL SPACE	CIRCUIT CKT NO.
1	1	20	3	ELECTRICIAN TRAINING BOOTHS, 'F9'	1386	6928			5543				2	2
3	3				1386		6928		5543	EXTERIOR CORD REEL - BUILDING 'F'	50	3	4	4
5	5				1386			6928	5543				6	6
7	7	20	2	ELECTRICIAN TRAINING BOOTHS, 'F9'	1200	6743			5543				8	8
9	9				1200		6743		5543	EXTERIOR CORD REEL - BUILDING 'F'	50	3	10	10
11	11	20	1	SPARE				5543	5543				12	12
13	13	20	1	SPARE		5543			5543				14	14
15	15			"DO NOT USE" (2)			5543		5543	EXTERIOR CORD REEL - BUILDING 'F'	50	3	16	16
17	17	20	1	SPARE				5543	5543				18	18
19	19	20	1	SPARE		5543			5543				20	20
21	21			"DO NOT USE" (2)			5543		5543	EXTERIOR CORD REEL - BUILDING 'F'	50	3	22	22
23	23	20	1	SPARE				5543	5543				24	24
25	25	20	1	SPARE		5543			5543				26	26
27	27			"DO NOT USE" (2)			5543		5543	EXTERIOR CORD REEL - BUILDING 'F'	50	3	28	28
29	29	20	1	SPARE				5543	5543				30	30
31	31	20	1	SPARE		5543			5543				32	32
33	33			"DO NOT USE" (2)			5543		5543	EXTERIOR CORD REEL - BUILDING 'F'	50	3	34	34
35	35	20	1	SPARE				5543	5543				36	36
37	37	20	1	SPARE		0				SPARE	20	1	38	38
39	39			"DO NOT USE" (2)			0			"DO NOT USE" (2)			40	40
41	41	20	1	SPARE	0			0		SPARE	20	1	42	42
				TOTAL CONNECTED LOAD (VA) :		35841	35841	34641						
				25% LCL/LML (VA) :		0	0	0						
				TOTAL CALCULATED LOAD (VA) :		35841	35841	34641	TOTAL CALCULATED LOAD FOR PANEL:					
				TOTAL CALCULATED LOAD (AMPS) :		298.7	298.7	288.7	106323 VA					

PANEL SCHEDULE NOTES:

(1) PHASE B IS HIGH-LIGHTED TO INDICATE THAT IT IS THE HIGH-LEG OF A 3-PHASE, 4-WIRE, DELTA-CONNECTED SYSTEM. CONDUCTOR COLOR CODING AND PHASE ARRANGEMENT SHALL BE IN ACCORDANCE WITH 2019 CEC ARTICLES 110.15, 408.3(E)[1] & 408.3(F).

(2) SINGLE PHASE LOADS SHALL NOT BE CONNECTED TO THE B-PHASE OF THIS PANEL. FIELD APPLY PERMANENT LABEL INDICATING "CAUTION B-PHASE HAS 208V TO GROUND".

LIGHTING CONTROL PANEL 'LCD'

nLIGHT RELAY PANEL MODEL: ARP INTENC08 NLT 4FCR MVOLT 1VB HLK SM

120V - 277V WITH EIGHT 20AMP RELAYS AND

CA TITLE 24 COMPLIANT ASTRONOMIC TIME CLOCK

LOCATION: ELEC. RM. - D11 — MOUNTING: SURFACE PER 11/E600 — ENCLOSURE: NEMA 1

LOW VOLTAGE INPUT CONTROL SCHEME	DEVICE ADDRESS	DEVICE	HIGH VOLTAGE OUTPUT PANEL	CIRCUIT	WATTAGE	DESCRIPTION
ATC*	nRP 1 Relay 1	Relay 1	LD	2	440	LIGHTING - EXTERIOR EAST SIDE
ATC*	nRP 2 Relay 2	Relay 2	LD	4	612	LIGHTING - EXTERIOR WEST SIDE
ATC*	nRP 3 Relay 3	Relay 3	LD	2	632	LIGHTING - EXTERIOR TAPE LIGHT
ATC*	nRP 4 Relay 4	Relay 4				SPARE
ATC*	nRP 5 Relay 5					
ATC*	nRP 6 Relay 6					
ATC*	nRP 7 Relay 7					
ATC*	nRP 8 Relay 8					
	nRP Main (Sensor)	*SPACE*				

NOTES:
* Astronomic Time Clock (ATC) through SensorView software.

LIGHTING CONTROL PANEL 'LCE'

nLIGHT RELAY PANEL MODEL: ARP INTENC08 NLT 8FCR MVOLT 1VB HLK SM

120V - 277V WITH EIGHT 20AMP RELAYS AND

CA TITLE 24 COMPLIANT ASTRONOMIC TIME CLOCK

LOCATION: ELEC. RM. - E9 — MOUNTING: SURFACE PER 11/E600 — ENCLOSURE: NEMA 1

LOW VOLTAGE INPUT CONTROL SCHEME	DEVICE ADDRESS	DEVICE	HIGH VOLTAGE OUTPUT PANEL	CIRCUIT	WATTAGE	DESCRIPTION
ATC*	nRP 1 Relay 1	Relay 1	LE	4	476	LIGHTING - EXTERIOR WEST SIDE
ATC*	nRP 2 Relay 2	Relay 2	LE	6	259	LIGHTING - EXTERIOR EAST SIDE
ATC*	nRP 3 Relay 3	Relay 3	LE	7	2608	EXTERIOR COURTYARD WEST
ATC*	nRP 4

\\tet-file1\Users\corey.stone\Documents\12032-E-COS Tulare CTE_corey.stone.rvt

STATE OF CALIFORNIA
Outdoor Lighting
NRCC-LTO-E (Created 01/21) CALIFORNIA ENERGY COMMISSION

CERTIFICATE OF COMPLIANCE		NRCC-LTO-E
This document is used to demonstrate compliance with requirements in §110.9, §130.0, §130.2, §140.7, and §141.0(b)2L for outdoor lighting scopes using the prescriptive path.		
Project Name: Tulare Campus CTE	Report Page:	Page 1 of 9
Project Address: 4999 E. Bardsley Ave. Tulare, CA	Date Prepared:	6-10-22

A. GENERAL INFORMATION

01	Project Location (city)	Tulare	04 Total Illuminated Hardscape Area (ft²)	137,881.44
02	Climate Zone	13		
03	Outdoor Lighting Zone per Title 24, Part 1 §10-114 or as designated by Authority Having Jurisdiction (AHJ):			

☐ LZ-0: Very Low - Undeveloped Parkland ☐ LZ-2: Moderate - Rural Areas ☐ LZ-4: High - Must be reviewed by CA Energy Commission for Approval
☐ LZ-1: Low - Developed Parkland ☑ LZ-3: Moderately High - Urban Areas

B. PROJECT SCOPE
Table Instructions: Include any outdoor lighting systems that are within the scope of the permit application and are demonstrating compliance using the prescriptive path outlined in §140.7 or §141.0(b)2L for alterations.

My project consists of:

01	02
☑ New Lighting System	Must Comply with Allowances from §140.7.
☐ Altered Lighting System	Is your alteration increasing the connected lighting load (Watts)? ◯ Yes ◯ No

03	04	05
% of Existing Luminaires Being Altered[1]	Sum Total of Luminaires Being Added or Altered	Calculation Method

[1] *FOOTNOTES: % of Existing Luminaires Being Altered = (Sum Total of Luminaires Being Added or Altered / Existing Luminaires within the Scope of the Permit Application) x 100*

C. COMPLIANCE RESULTS
Table Instructions: If any cell on this table says "DOES NOT COMPLY" or "COMPLIES with Exceptional Conditions" refer to Table D. for guidance.

Calculation of Total Allowed Lighting Power (Watts) §140.7 or §141.0(b)2L										Compliance Results		
01		02		03		04		05	06	07	08	09
General Hardscape Allowance §140.7(d)1	+	Per Application §140.7(d)2	+	Sales Frontage §140.7(d)2	+	Ornamental §140.7(d)2	+	Per Specific Area §140.7(d)2	OR Existing Power §141.0(b)2L	= Total Allowed (Watts)	≥	Total Actual (Watts)	07 Must be ≥ 08
(See Table I)		(See Table J)		(See Table K)		(See Table L)		(See Table M)	(See Table N)			(See Table F)	
7,996.83	+		+		+	1,792.45872	+	7,485	OR	17,274.28872	≥	15,472	COMPLIES
Cutoff Compliance (See Table G for Details)												**COMPLIES**	
Controls Compliance (See Table H for Details)												**COMPLIES**	

STATE OF CALIFORNIA
Outdoor Lighting
NRCC-LTO-E (Created 01/21) CALIFORNIA ENERGY COMMISSION

CERTIFICATE OF COMPLIANCE		NRCC-LTO-E
Project Name: Tulare Campus CTE	Report Page:	Page 2 of 9
Project Address: 4999 E. Bardsley Ave. Tulare, CA	Date Prepared:	6-10-22

D. EXCEPTIONAL CONDITIONS
This table is auto-filled with uneditable comments because of selections made or data entered in tables throughout the form.

Table F. Outdoor Lighting Fixture Schedule Permit Applicant Notes:
W2: Building Facade light
Total Hardscape Area in Table A does not match the areas entered in Table I. Please review for compliance.

E. ADDITIONAL REMARKS
This table includes remarks made by the permit applicant to the Authority Having Jurisdiction.

F. OUTDOOR LIGHTING FIXTURE SCHEDULE
Table Instructions: For new or altered lighting systems demonstrating compliance with §140.7 (ie Table I has expanded for input), include all luminaires being installed and any existing luminaires remaining or being moved within the spaces covered by the permit application in the Table below. For altered lighting systems using the Existing Power method per §141.0(b)2L (ie Table N has expanded for input), include only new luminaires being installed and replacement luminaires being installed as part of the project scope (ie, do not include existing luminaires remaining or existing luminaires being moved).

Designed Wattage:

01 Name or Item Tag	02 Complete Luminaire Description	03 Watts per luminaire[1,2]	04 How Wattage is determined	05 Total number luminaires[2]	06 Luminaire Status[3]	07 Excluded per §140.7(a)	08 Design Watts	09 Cutoff Req. ≥ 6,200 initial lumen output §130.2(b)[4]	10 Field Inspector Pass	Fail
B2	Surface Mounted LED ☐ Linear	34	Mfr. Spec[1]	59	New	☐	2,006	NA: <6,200 lumens	☐	☐
C3	Recessed Can Light ☐ Linear	15	Mfr. Spec[1]	69	New	☐	1,035	NA: <6,200 lumens	☐	☐
G1	In-ground Up Light ☐ Linear	46	Mfr. Spec[1]	41	New	☐	1,886	NA: <6,200 lumens	☐	☐
S1	25' Single Head Pole Light ☐ Linear	163	Mfr. Spec[1]	17	New	☐	2,771	Yes	☐	☐
S2	25' Quad Head Pole Light ☐ Linear	652	Mfr. Spec[1]	8	New	☐	5,216	Yes	☐	☐
T1	LED Tape Light ☐ Linear	79	Mfr. Spec[1]	24	New	☐	1,896	NA: <6,200 lumens	☐	☐
W1	Wall Light ☐ Linear	31	Mfr. Spec[1]	13	New	☐	403	NA: <6,200 lumens	☐	☐
W2	Wall Light ☐ Linear	77	Mfr. Spec[1]	2	New	☐	154	Exempt*	☐	☐
W3	Wall Light ☐ Linear	35	Mfr. Spec[1]	3	New	☐	105	NA: <6,200 lumens	☐	☐
					Total Designed Watts:		**15,472**			

Table Continued

STATE OF CALIFORNIA
Outdoor Lighting
NRCC-LTO-E (Created 01/21) CALIFORNIA ENERGY COMMISSION

CERTIFICATE OF COMPLIANCE		NRCC-LTO-E
Project Name: Tulare Campus CTE	Report Page:	Page 3 of 9
Project Address: 4999 E. Bardsley Ave. Tulare, CA	Date Prepared:	6-10-22

01 Name or Item Tag	02 Complete Luminaire Description	03 Watts per luminaire[1,2]	04 How Wattage is determined	05 Total number luminaires[2]	06 Luminaire Status[3]	07 Excluded per §140.7(a)	08 Design Watts	09 Cutoff Req. ≥ 6,200 initial lumen output §130.2(b)[4]	10 Field Inspector Pass	Fail
W2	Building Facade light									

* NOTES: Selections with a * require a note in the space below explaining how compliance is achieved.
EX: Luminaire is lighting a statue; EXCEPTION 2 to §130.2(b).

[1] *FOOTNOTES: Authority Having Jurisdiction may ask for Luminaire cut sheets to confirm wattage used for compliance per §130.0(c)*
[2] *For linear luminaires, wattage should be indicated as W/lf instead of Watts/luminaire. Total linear feet for the luminaire should be indicated in column 05 instead of number of luminaires.*
[3] *Select "New" for new luminaires in a new outdoor lighting project or for added luminaires in an alteration. Select "Altered" for replacement luminaires in an alteration. Select "Existing to Remain" for existing luminaires within the project scope that are not being altered and are remaining. Select "Existing Reinstalled" for existing luminaires which are being removed and reinstalled as part of the project scope*
[4] *Compliance with mandatory cutoff requirements is required for luminaires with initial lumen output ≥ 6,200 unless exempted by §130.2(b).*

G. CUTOFF REQUIREMENTS (BUG)
Table Instructions: Complete this table for fixtures of ≥ 6,200 initial luminaire lumens indicated on Table F as needing to comply with Cutoff Requirements. Maximum lumens can be found in Title 24, Part 11, Section 5.106.8.

01 Name or Item Tag	02 Complete Luminaire Description	03 Backlight Rating[1] Mounting Height from Property Line[1]	04 Max Allowable Backlight Rating[1]	05 Backlight Rating Per Design	06 Uplight Rating[2] Lighting Type	07 Max Allowable Uplight Rating[2]	08 Uplight Rating Per Design	09 Glare Rating[2] Mounting Height from Property Line[1]	10 Max Allowable Glare Rating[2]	11 Glare Rating Per Design	12 Field Inspector Pass	Fail
S1	25' Single Hea	> 2 MH from property line	No Limit	B3	Area Lighting	U0	U0	> 2 MH from property line	G3	G3	☐	☐
S2	25' Quad Hea	> 2 MH from property line	No Limit	B3	Area Lighting	U0	U0	> 2 MH from property line	G3	G3	☐	☐

STATE OF CALIFORNIA
Outdoor Lighting
NRCC-LTO-E (Created 01/21) CALIFORNIA ENERGY COMMISSION

CERTIFICATE OF COMPLIANCE		NRCC-LTO-E
Project Name: Tulare Campus CTE	Report Page:	Page 4 of 9
Project Address: 4999 E. Bardsley Ave. Tulare, CA	Date Prepared:	6-10-22

[1] *FOOTNOTES: Mounting Height is labeled MH in this table*
[2] *Authority having jurisdiction may ask for luminaire cut sheets or other documentation to confirm luminaire type, uplight ratings and glare ratings used for compliance per §130.2(b).*
[3] *BUG ratings with a lower number than the 'Max Allowable' are compliant. Ex. If Max Allowable is Bug Rating is B4, then B0, B1, B2, B3 and B4 are all compliant.*

H. OUTDOOR LIGHTING CONTROLS
Table Instructions: Complete this table demonstrating compliance with controls requirements for all new or altered luminaires installed as part of the permit application. For alteration projects, luminaires which are existing to remain (ie untouched) and luminaires which are removed and reinstalled (wiring only) do not need to be included in this table even if they are within the spaces covered by the permit application.
*When an option having a * is selected, the notes section of this table must be completed. The lighting controls section of the Compliance Summary Table on the first page will show "DOES NOT COMPLY" if the notes are left blank. For each requirement in columns 02 through 04, do not leave the field blank, instead select NA or Exempt* from the dropdown list to indicate not applicable or an exemption.*

Mandatory Controls

01 Area Description	02 Shut-Off §130.2(c)1	03 Auto-Schedule §130.2(c)2	04 Motion Sensor §130.2(c)3	05 Field Inspector Pass	Fail
Out Door Building Walkways	Astronomical Timer	Yes - EMCS	Yes	☐	☐
Parking Lot Lights	Astronomical Timer	Yes - EMCS	NA: Façade, etc. ≥ 24ft	☐	☐
Roadway	Astronomical Timer	Yes - EMCS	NA: Façade, etc. ≥ 24ft	☐	☐

*NOTES: Controls with a * require a note in the space below explaining how compliance is achieved.
EX: Not permitted by health & safety to be turned off; EXCEPTION 1 to §130.2(c).

I. LIGHTING POWER ALLOWANCE (per §140.7)
Table Instructions: Please complete this table for areas using the allowance calculations per §140.7. General Hardscape Allowance is per Table 140.7-A while "Use it or lost it" Allowances are per Table 140.7-B. Indicate which allowances are being used to expand sections for user input. Luminaires that qualify for one of the "Use it or lose it" allowances shall not qualify for another "Use it or lose it" allowance.

	01			
	General Hardscape Allowance	"Use it or lose it" Allowances (select all that apply)		
	☑	☐ Per Application	☐ Sales Frontage	☑ Ornamental	☑ Per Specific Area
	Table I (below)	Table J	Table K	Table L	Table M
Calculated General Hardscape Lighting Power Allowance per Table 140.7-A (LZ 2 & 3)					

Table Continued

STATE OF CALIFORNIA
Outdoor Lighting
NRCC-LTO-E (Created 01/21) CALIFORNIA ENERGY COMMISSION

CERTIFICATE OF COMPLIANCE		NRCC-LTO-E
Project Name: Tulare Campus CTE	Report Page:	Page 5 of 9
Project Address: 4999 E. Bardsley Ave. Tulare, CA	Date Prepared:	6-10-22

02 Area Description	03 Surface Type	04 Area Wattage Allowance (AWA) Illuminated Area (ft²)	05 Allowed Density (W/ft²)	06 Area Allowance (Watts)	07 Linear Wattage Allowance (LWA) Perimeter Length (lf)	08 Allowed Density (W/lf)	09 Linear Allowance (Watts)	10 Total General AWA + LWA (Watts)
Outdoor Walkways/Parking Lot	Concrete	137,881	0.03	4,136.43	8,776	0.4	3,510.4	7,646.83
								0
								0
						Initial Wattage Allowance for Entire Site (Watts):		**350**
						Total General Hardscape Allowance (Watts):		**7,996.83**

J. LIGHTING ALLOWANCE: PER APPLICATION
This Section Does Not Apply

K. LIGHTING ALLOWANCE: SALES FRONTAGE
This Section Does Not Apply

L. LIGHTING ALLOWANCE: ORNAMENTAL
Table Instructions: Please complete this table for areas using the wattage allowance for Hardscape Ornamental Lighting from Table 140.7-B.

01 Area Description	02 CALCULATED ALLOWANCE (Watts) Illuminated Area (ft²)	03 Allowed Density (W/ft²)	04 Extra Allowance (Watts)	05 Luminaire Name or Item Tag	06 DESIGN WATTS Watts per Luminaire[1,2]	07 # of Luminaires[2]	08 Design Watts	09 Additional Allowance (Watts)
Building Facade	137,881.44	0.013	1,792.45872	T1	79	24	1,896	
				G1	46	41	1,886	
				C3	15	69	1,035	
				W1	31	13	403	
				W2	77	2	154	
				W3	35	3	105	
						Total Design Watts for this Area:	5,479	1,792.45872

Table Continued

STATE OF CALIFORNIA
Outdoor Lighting
NRCC-LTO-E (Created 01/21) CALIFORNIA ENERGY COMMISSION

CERTIFICATE OF COMPLIANCE		NRCC-LTO-E
Project Name: Tulare Campus CTE	Report Page:	Page 6 of 9
Project Address: 4999 E. Bardsley Ave. Tulare, CA	Date Prepared:	6-10-22

01 Area Description	02 CALCULATED ALLOWANCE (Watts) Illuminated Area (ft²)	03 Allowed Density (W/ft²)	04 Extra Allowance (Watts)	05 DESIGN WATTS Luminaire Name or Item Tag	06 Watts per Luminaire[1,2]	07 # of Luminaires[2]	08 Design Watts	09 Additional Allowance (Watts)
						Total Allowance (Watts) Ornamental:		**1,792.45872**

[1] *FOOTNOTES: Luminaires qualifying for this allowance shall be rated < 100W and shall be post-top luminaires, lanterns, pendants or chandeliers.*
[2] *For luminaires indicated in Table F as linear, wattage in column 06 is W/lf instead of Watts/luminaire. Total linear feet for the luminaire should be indicated in column 07 instead of number of luminaires.*

M. LIGHTING ALLOWANCE: PER SPECIFIC AREA
Table Instructions: Please complete this table for areas using the wattage allowance per specific area type from Table 140.7-B. More than one specific area allowance may be taken in a single project, if applicable. However, multiple specific area allowances may not be taken for the exact same area on the site.

01 Area Description	02 Specific Area Type per Table 140.7-B	03 CALCULATED ALLOWANCE (Watts) Specific Area (ft²)[1]	04 Allowed Density (W/ft²)	05 Extra Allowance (Watts)	06 DESIGN WATTS Luminaire Name or Item Tag	07 Watts per Luminaire[1,2]	08 # of Luminaires[2]	09 Design Watts	10 Additional Allowance (Watts)
Shade Canopy	Non-sales Canopies/Tunnels	10,190	0.27	2,751.3	B2	34	59	2,006	
							Total Design Watts for this Area:	2,006	2,006
Building Facade	Bldg Façade	137,881.44	0.17	23,439.844	C3	15	69	1,035	
					G1	46	41	1,886	
					T1	79	24	1,896	

Table Continued

STATE OF CALIFORNIA
Outdoor Lighting
NRCC-LTO-E (Created 01/21) CALIFORNIA ENERGY COMMISSION

CERTIFICATE OF COMPLIANCE		NRCC-LTO-E
Project Name: Tulare Campus CTE	Report Page:	Page 7 of 9
Project Address: 4999 E. Bardsley Ave. Tulare, CA	Date Prepared:	6-10-22

01 Area Description	02 Specific Area Type per Table 140.7-B	03 CALCULATED ALLOWANCE (Watts) Specific Area (ft²)[1]	04 Allowed Density (W/ft²)	05 Extra Allowance (Watts)	06 DESIGN WATTS Luminaire Name or Item Tag	07 Watts per Luminaire[2]	08 # of Luminaires[2]	09 Design Watts	10 Additional Allowance (Watts)
					W1	31	13	403	
					W2	77	2	154	
					W3	35	3	105	
							Total Design Watts for this Area:	5,479	5,479
							Total Allowance (Watts) All Areas:		**7,485**

[1] *FOOTNOTES: See Table 140.7-B for the rules for calculating the specific areas (ft²) for these additional lighting allowances.*
[2] *For luminaires indicated in Table F as linear, wattage in column 07 is W/lf instead of Watts/luminaire. Total linear feet for the luminaire should be indicated in column 08 instead of number of luminaires.*

N. EXISTING CONDITIONS POWER ALLOWANCE (alterations only)
This Section Does Not Apply

O. DECLARATION OF REQUIRED CERTIFICATES OF INSTALLATION
Table Instructions: Selections have been made based on information provided in previous tables of this document. If any selection needs to be changed, please explain why in Table E. Additional Remarks. These documents must be provided to the building inspector during construction and can be found online at https://www.energy.ca.gov/title24/2019standards/2019_compliance_documents/Nonresidential_Documents/NRCI/

YES	NO	Form/Title	Field Inspector Pass	Fail
◉	◯	NRCI-LTO-01-E - Must be submitted for all buildings.	☐	☐
◉	◯	NRCI-LTO-02-E - Must be submitted for a lighting control system; or for an Energy Management Control System (EMCS), to be recognized for compliance.	☐	☐

STATE OF CALIFORNIA
Outdoor Lighting
NRCC-LTO-E (Created 01/21) CALIFORNIA ENERGY COMMISSION

CERTIFICATE OF COMPLIANCE		NRCC-LTO-E
Project Name: Tulare Campus CTE	Report Page:	Page 8 of 9
Project Address: 4999 E. Bardsley Ave. Tulare, CA	Date Prepared:	6-10-22

P. DECLARATION OF REQUIRED CERTIFICATES OF ACCEPTANCE
Table Instructions: Selections have been made based on information provided in previous tables of this document. If any selection needs to be changed, please explain why in Table E. Additional Remarks. These documents must be provided to the building inspector during construction and must be completed through an Acceptance Test Technician Certification Provider (ATTCP). For more information visit: http://www.energy.ca.gov/title24/attcp/providers.html

YES	NO	Form/Title	Field Inspector Pass	Fail
◉	◯	NRCA-LTO-02-A - Must be submitted for all outdoor lighting controls except for alterations where controls area added to ≤ 20 luminaires.	☐	☐

STATE OF CALIFORNIA
Outdoor Lighting
NRCC-LTO-E (Created 01/21) CALIFORNIA ENERGY COMMISSION

CERTIFICATE OF COMPLIANCE		NRCC-LTO-E
Project Name: Tulare Campus CTE	Report Page:	Page 9 of 9
Project Address: 4999 E. Bardsley Ave. Tulare, CA	Date Prepared:	6-10-22

DOCUMENTATION AUTHOR'S DECLARATION STATEMENT
I certify that this Certificate of Compliance documentation is accurate and complete

Documentation Author Name:	Corey Stone	Documentation Author Signature:	
Company:	Teter, LLP	Signature Date:	11/02/2022
Address:	7535 N. Palm Ave, Suite 201	CEA/ HERS Certification Identification (if applicable):	
City/State/Zip:	Fresno, CA 93711	Phone:	

RESPONSIBLE PERSON'S DECLARATION STATEMENT
I certify the following under penalty of perjury, under the laws of the State of California:
1. **The information provided on this Certificate of Compliance is true and correct.**
2. **I am eligible under Division 3 of the Business and Professions Code to accept responsibility for the building design or system design identified on this Certificate of Compliance (responsible designer)**
3. **The energy features and performance specifications, materials, components, and manufactured devices for the building design or system design identified on this Certificate of Compliance conform to the requirements of Title 24, Part 1 and Part 6 of the California Code of Regulations.**
4. **The building design features or system design features identified on this Certificate of Compliance are consistent with the information provided on other applicable compliance documents, worksheets, calculations, plans and specifications submitted to the enforcement agency for approval with this building permit application.**
5. **I will ensure that a completed signed copy of this Certificate of Compliance shall be made available with the building permit(s) issued for the building, and made available to the enforcement agency for all applicable inspections. I understand that a completed signed copy of this Certificate of Compliance is required to be included with the documentation the builder provides to the building owner at occupancy.**

Responsible Designer Name:	Corey Stone	Responsible Designer Signature:	
Company :	Teter, LLP	Date Signed:	11/02/2022
Address:	7535 N. Palm Ave., Suite 201	License:	E 22952
City/State/Zip:	Fresno, CA 93711	Phone:	559-437-0887

FOR BID ONLY

Teter, LLP expressly reserves its common law copyright and other property rights in these plans. This document, the ideas and designs incorporated herein, as an instrument of professional service, is not to be used in whole or part, for any other project without prior written authorization.

MARK	DATE	DESCRIPTION
	11/1/22	DSA BACKCHECK

TETER, LLP
ARCHITECTS ENGINEERS CONNECTED
FRESNO HEADQUARTERS
VISALIA | BAKERSFIELD | MODESTO | SAN LUIS OBISPO
TETER

TULARE CAMPUS CTE
COLLEGE OF THE SEQUOIAS
4999 E. BARDSLEY AVE.
TULARE, CA

DRAWING TITLE
CA ENERGY CODE COMPLIANCE FORMS

PROJECT NO.
21-12032

DRAWING
E900

PLOT DATE: 11/2/2022 9:57:04 AM

C:\Users\wacon\Box\Projects 2021\21-048 BFP - College of the Sequoias - CTE Building\21-048 BFP - College of the Sequoias - CTE Building\2_Submittals\Drawings\12032-FP-COS Tulare CTE 2023.rvt

FIRE PROTECTION SHEET INDEX	
SHEET NUMBER	SHEET NAME
FP001	FIRE PROTECTION - GENERAL INFORMATION
FP002	FIRE PROTECTION - SITE PLAN
FP100	FIRE PROTECTION - BUILDING D PIPING PLAN NORTH
FP101	FIRE PROTECTION - BUILDING D PIPING PLAN SOUTH
FP107	FIRE PROTECTION - PUMP HOUSE AND PUMP PLAN
FP110	FIRE PROTECTION - BUILDING E PIPING PLAN
FP120	FIRE PROTECTION - BUILDING F PIPING PLAN WEST
FP121	FIRE PROTECTION - BUILDING F PIPING PLAN EAST
FP200	FIRE PROTECTION - BUILDING D REFLECTED CEILING PLAN NORTH
FP201	FIRE PROTECTION - BUILDING D REFLECTED CEILING PLAN SOUTH
FP210	FIRE PROTECTION - BUILDING E REFLECTED CEILING PLAN
FP220	FIRE PROTECTION - BUILDING F REFLECTED CEILING PLAN WEST
FP221	FIRE PROTECTION - BUILDING F REFLECTED CEILING PLAN EAST
FP400	FIRE PROTECTION - BUILDING D SECTIONS
FP410	FIRE PROTECTION - BUILDING E SECTIONS
FP420	FIRE PROTECTION - BUILDING F SECTIONS
FP501	FIRE PROTECTION - DETAILS

SPRINKLER SCHEDULE								
Sprinkler Symbol	Count	Manufacturer	Model	Orifice Size	K-Factor	Temperature Rating	Sprinkler Orientation	Finish
○	789	VICTAULIC Inc.	V2704	1/2"	5.6	200 °F	UPRIGHT	Brass
◁	11	VICTAULIC Inc.	V2709	1/2"	5.6	200 °F	HORIZONTAL SIDEWALL	White
●	158	VICTAULIC	V3802	1/2"	5.6	155 °F	CONCEALED	White

PIPING SYSTEM SCHEDULE			
PRODUCT	MANUFACTURER	SCHEDULE	MATERIAL TYPE
MAINS	WHEATLAND OR EQUAL	SCH 10	STEEL
BRANCHLINES > 1"	WHEATLAND OR EQUAL	SCH 10	STEEL
BRANCHLINES 1" & LESS	WHEATLAND OR EQUAL	SCH 40	STEEL
GROOVED FITTINGS	VICTAULIC OR EQUAL	175 PSI	DUCTILE IRON
THREADED FITTINGS	ANVIL OR EQUAL	175 PSI	DUCTILE IRON

FIRE PROTECTION ABBREVIATIONS

A.D.	ACCESS DOOR
A.F.F.	ABOVE FINISHED FLOOR
ALP.	ALARM PANEL
A.P.	ACCESS PANEL
B.F.F.	BELOW FINISHED FLOOR
B.F.P.	BACKFLOW PREVENTOR
C.P.	CONTROL PANEL
DCDA	DOUBLE CHECK DETECTOR ASSEMBLY
ELEV	ELEVATION
FD	FLOOR DRAIN
FDC	FIRE DEPARTMENT CONNECTION
FHC	FIRE HOSE VALVE CONNECTION (2-1/2")
FHV	FIRE HOSE VALVE
FLR	FLOOR
FS	FLOW SWITCH NORMALLY CLOSED N.C.
N.I.C	NOT TO SCALE
N.T.S.	NOT IN CONTRACT
OS&Y	OUTSIDE STEM AND YOKE GATE VALVE
PSIG	POUNDS PER SQUARE INCH GAUGE
TS	TAMPER SWITCH
TYP.	TYPICAL THROUGHOUT
PIV	POST INDICATOR VALVE

HYDRAULIC CALCULATION CRITERIA

1. ALL SPRINKLER SYSTEMS THROUGHOUT THE BUILDING SHALL BE HYDRAULICALLY CALCULATED BASED ON COORDINATED SHOP DRAWINGS.

2. SPRINKLER SYSTEM LAYOUT AND CALCULATIONS SHALL COMPLY WITH THE CALIFORNIA BUILDING CODE, NFPA 13, OWNER'S INSURANCE COMPANY REQUIREMENTS AND GOOD ENGINEERING PRACTICE.

3. OCCUPANCY CLASSIFICATION:
   A. LIGHT HAZARD OCCUPANCY: CLASSROOMS, CORRIDORS, COMMON AREAS.
   B. ORDINARY HAZARD GROUP-1 OCCUPANCY: STORAGE, MECHANICAL, ELECTRICAL ROOMS
   C. ORDINARY HAZARD GROUP-2 OCCUPANCY: LABS, VOCATIONAL SHOPS.
   D. EXTRA HAZARD GROUP-2 AUTOMOTIVE TECHNOLOGY LAB, FUEL STORAGE, CHEMICAL STORAGE, INDUSTRIAL MAINTENANCE LAB

4. SPRINKLERS PROTECTING LIGHT HAZARD OCCUPANCY SHALL PROVIDE A MINIMUM DENSITY DISCHARGE OF .10 GPM/SQ.FT. OVER MOST HYDRAULICALLY REMOTE 1,500 SQ.FT., MAXIMUM COVERAGE PER SPRINKLER HEAD- 225 SQ.FT.

5. SPRINKLERS PROTECTING ORDINARY HAZARD GROUP-1 OCCUPANCY SHALL PROVIDE A MINIMUM DENSITY DISCHARGE OF .15 GPM/SQ.FT. OVER MOST HYDRAULICALLY REMOTE 1,500 SQ.FT., MAXIMUM COVERAGE PER SPRINKLER HEAD- 130 SQ.FT.

6. SPRINKLERS PROTECTING ORDINARY HAZARD GROUP-2 OCCUPANCY SHALL PROVIDE A MINIMUM DENSITY DISCHARGE OF .20 GPM/SQ.FT. OVER MOST HYDRAULICALLY REMOTE 1,500 SQ.FT., MAXIMUM COVERAGE PER SPRINKLER HEAD- 130 SQ.FT.

7. SPRINKLERS PROTECTING EXTRA HAZARD GROUP-2 OCCUPANCY SHALL PROVIDE A MINIMUM DENSITY DISCHARGE OF .40 GPM/SQ.FT. OVER MOST HYDRAULICALLY REMOTE 2,500 SQ.FT., MAXIMUM COVERAGE PER SPRINKLER HEAD- 100 SQ.FT.

8. MINIMUM PRESSURE AT ANY SPRINKLER HEAD SHALL BE AS REQUIRED BY HYDRAULIC CALCULATIONS BUT IN NO CASE LESS THEN 7-PSI.

EDUCATIONAL OCCUPANCY DESIGN CRITERIA

- LIGHT HAZARD OCCUPANCY (CLASSROOMS, OFFICES, *AUDITORIUMS, COMMON CORRIDORS, LIBRARY READING AREAS WITHOUT HIGH STACKS)- DENSITY .10 GPM PER SQUARE FOOT OVER THE MOST HYDRAULICALLY REMOTE 1500 SQUARE FEET MAXIMUM COVERAGE PER SPRINKLER HEAD 225 SQUARE FEET.
- ORDINARY HAZARD GP-1 OCCUPANCY (KITCHENS, MULTI-PURPOSE ROOMS, LARGE STORAGE AREAS, STAGES [AS DEFINED IN 2016 CBC 410.3])- DENSITY .15 GPM PER SQUARE FOOT OVER THE MOST HYDRAULICALLY REMOTE 1500 SQUARE FEET MAXIMUM COVERAGE PER SPRINKLER HEAD 130 SQUARE FEET.
- ORDINARY HAZARD GP-2 OCCUPANCY (SCIENCE LABS, VOCATIONAL SHOPS, STAGES 1,000SQFT IN AREA OR >50'-0 IN HEIGHT, LIBRARY READING AREAS WITH HIGH STACKS)- DENSITY .20 GPM PER SQUARE FOOT OVER THE MOST HYDRAULICALLY REMOTE 1500 SQUARE FEET MAXIMUM COVERAGE PER SPRINKLER HEAD 130 SQUARE FEET.
- NFPA 13, A.5.1, A.5.3.1, A.5.3.2 *IF ALSO FUNCTIONS AS MULTI-PURPOSE ROOM, USE ORDINARY HAZARD GROUP 1
- MINIMUM PRESSURE AT SPRINKLER HEAD 7 PSI.
- DISCHARGE FROM EACH SPRINKLER HEAD SHALL NOT BE LESS THAN THAT REQUIRED IN NFPA 13 2016 EDITION.

GENERAL NOTES

1. IT IS THE INTENT OF THESE DRAWINGS AND SPECIFICATIONS FOR THE CONTRACTOR TO FURNISH AND INSTALL A COMPLETE NEW WET FIRE SPRINKLER PROTECTION SYSTEM FOR THE BUILDING IN FULL COMPLIANCE WITH THE STATE OF CALIFORNIA AND BUILDING CODES INCLUDING: VALVES, RISERS, AND ALARMS AS REQUIRED. THIS CONTRACTOR SHALL BE RESPONSIBLE FOR THE FULL INSTALLATION ASPECT OF THE FIRE PROTECTION SYSTEM IN ACCORDANCE WITH APPLICABLE CODES.

2. THE ENTIRE INSTALLATION SHALL BE IN ACCORDANCE WITH THE LATEST RULES AND REGULATIONS OF THE AUTHORITIES HAVING JURISDICTION INCLUDING BUT NOT LIMITED TO, STATE BUILDING AND FIRE CODES AND ALL APPENDICES, THE NATIONAL FIRE PROTECTION ASSOCIATION STANDARD NO. 13, 14 & 20 AS ADOPTED BY THE STATE OF CALIFORNIA, AND THE OWNER'S INSURANCE UNDERWRITERS.

3. IF THERE ARE ANY QUESTIONS CONCERNING WHAT THE INSURANCE UNDERWRITER WILL REQUIRE IN ORDER TO APPROVE THE COMPLETED INSTALLATION (PIPING SIZING, LOCATION OF RISERS, TEST STATIONS, HYDRANTS, ALARMS, ETC.) THE BIDDER SHALL CONSULT WITH THE INSURANCE UNDERWRITER BEFORE SUBMITTING HIS BID. FAILURE TO CONSULT WITH THE INSURANCE UNDERWRITER DOES NOT RELIEVE THIS CONTRACTOR FROM HIS RESPONSIBILITY BY THE COMPLETION OF ANY AND ALL WORK REQUIRED WITH NO EXTRA CHARGES TO THE OWNER.

4. FURNISH ALL MATERIALS, LABOR, TOOLS, EQUIPMENT AND SUPERVISION REQUIRED FOR THE INSTALLATION OF COMPLETE SYSTEMS AND ALL NECESSARY PIPING, SPRINKLER HEADS, TEST CONNECTIONS, VALVES, DRAINS AND SPRINKLER ALARMS, FLOW SWITCHES, HORNS OR GONGS, DETECTOR CHECK VALVES, SIAMESE FIRE DEPARTMENT CONNECTIONS, PRESSURE GAUGES, AND OTHER REQUIRED COMPONENTS.

5. ALL MATERIALS EXPOSED WITHIN PLENUMS SHALL BE NONCOMBUSTIBLE OR SHALL HAVE A FLAME SPREAD INDEX OF NOT MORE THAN 25 AND A SMOKE DEVELOPED INDEX OF NOT MORE THAN 50 WHEN TESTED IN ACCORDANCE WITH ASTM E 84. CONTRACTOR SHALL PROVIDE PROOF OF COMPLIANCE WITH THIS REQUIREMENT UPON REQUEST.

6. ALL SPRINKLER PIPING SHALL BE CONCEALED IN ALL FINISHED AREAS, AVOIDING INTERFERENCE WITH LIGHTS, DUCTS, PIPES, ETC. BALANCE MAY BE RUN EXPOSED. ANY CONFLICTS DURING INSTALLATION SHALL BE BROUGHT TO THE ATTENTION OF THE DESIGN ENGINEER.

7. SPRINKLER HEADS SHALL NOT INTERFERE WITH LIGHTING FIXTURES, SPEAKERS, AIR CONDITIONING DIFFUSERS AND GRILLES, ETC. COORDINATE WITH ARCHITECT'S REFLECTED CEILING PRIOR TO SUBMITTING SHOP DRAWING.

8. EXACT LOCATION OF SPRINKLER HEADS AND PIPING SHALL BE COORDINATED WITH OTHER TRADES AND THE ARCHITECT'S REFLECTED CEILING PLAN BEFORE INSTALLATION.

9. CUTTING AND NOTCHING OF JOISTS IS NOT ACCEPTABLE AND WILL NOT BE PERMITTED. ANY DAMAGE CAUSED TO THE BUILDING STRUCTURE DURING INSTALLATION SHALL BE REPAIRED AT THIS CONTRACTORS EXPENSE.

10. ALL ELECTRICAL REQUIREMENTS FOR FIRE PROTECTION AND SPRINKLER SYSTEM ARE TO BE INCLUDED AS PART OF THIS CONTRACTOR'S RESPONSIBILITY. THIS CONTRACTOR SHALL SUB-CONTRACT FOR ALL WIRING AND RELATED COMPONENT REQUIREMENTS WITH SEPARATE ELECTRICAL CONTRACTOR. ALARM WIRING REQUIREMENTS FOR THE FIRE PROTECTION AND ALARM SYSTEM ARE TO BE INCLUDED IN THIS WORK.

11. WHEN COMPLETED, THE ENTIRE SPRINKLER SYSTEM SHALL BE TESTED IN ACCORDANCE WITH CHAPTER 25 OF NFPA 13 AND AS REQUIRED BY THE RULES AND REGULATIONS OF THE AUTHORITIES HAVING JURISDICTION. ALL SYSTEMS MUST BE FREE OF LEAKS AND ANY OTHER DEFECTS.

12. ALL EQUIPMENT AND WORKMANSHIP SHALL BE GUARANTEED FOR A PERIOD OF ONE(1) YEAR AFTER ACCEPTANCE BY THE OWNER AND ARCHITECT, AGAINST DEFECTIVE MATERIALS AND LABOR AND IMPROPER DESIGN.

13. CONTRACTOR SHALL MAKE AN ALLOWANCE FOR A MINIMUM OF 5% ADDITIONAL SPRINKLER HEADS TO BE INSTALLED AS TO PROVIDE ADEQUATE COVERAGE DUE TO ANY OBSTRUCTIONS, DUCTWORK, PIPING, ETC. INSTALLED DURING CONSTRUCTION WHICH MAY ALTER THE ORIGINAL SPRINKLER DESIGN.

14. FURNISH SPRINKLER CABINETS OF FINISHED STEEL AND HINGED COVER SIMILAR TO POTTER-ROEMER FIG. 6162 WITH SPACE FOR A MINIMUM OF 6 SPARE SPRINKLER HEADS PLUS SPRINKLER WRENCH FOR EACH TYPE, SUITABLE FOR WALL MOUNTING. FURNISH SIX (6) EXTRA SPRINKLER HEADS, WITH A MINIMUM OF (2) OF EACH TYPE. THIS SHALL ALSO INCLUDE ESCUTCHEONS.

15. INSTALL SPRINKLER PIPING TO PROVIDE FOR SYSTEM DRAINAGE IN ACCORDANCE WITH NFPA 13.

16. INSTALL SPRINKLER PIPING ACCORDING TO NFPA 13 VIBRATION ISOLATION AND SEISMIC RESTRAINTS.

17. CONTRACTOR TO PAY FOR AND SUPPLY ALL DUMPSTERS FOR DEBRIS REMOVAL, COORDINATE AND OBTAIN APPROVAL FOR DUMPSTER LOCATIONS ON SITE AND DEBRIS REMOVAL ROUTES WITH THE CONSTRUCTION MANAGER.

18. INSTALL NON-COMBUSTIBLE HOODS OR SHIELDS ABOVE IMPORTANT ELECTRICAL EQUIPMENT FOR PROTECTION FROM SPRINKLER DISCHARGE PER NFPA 13, 8.14.10.2.

19. WHERE WORK BETWEEN THESE DRAWINGS AND ARCHITECTURAL PLANS ARE IN CONFLICT, ADVISE ARCHITECT AND ENGINEER PRIOR TO INSTALLATION OF SPRINKLER WORK.

20. ALL SPRINKLER DRAINS SHALL RUN TO SAFE LOCATIONS TO PREVENT OVERFLOW OF DRAINS.

21. PORTABLE FIRE EXTINGUISHERS, IF REQUIRED (OF REQUIRED CLASS AND CAPACITY) ARE NOT PART OF THIS CONTRACT.

22. ALL PIPING SYSTEMS SHOWN ON THESE DRAWINGS ARE DIAGRAMMATIC AND EVERY ATTEMPT HAS BEEN MADE TO INDICATE OFFSETS AND PIPING ARRANGEMENTS TO SUIT ACTUAL INSTALLATION REQUIREMENTS. HOWEVER, SPRINKLER CONTRACTOR SHALL COORDINATE WITH THE G.C. AND ALL OTHER TRADES WHEN LAYING OUT HIS WORK TO ENSURE CONFLICT AVOIDANCE.

23. AS THE ACTUAL LIFE SPAN OF THE SPRINKLER SYSTEM IS DEPENDENT ON MANY VARIABLES, INCLUDING BUT NOT LIMITED TO WATER QUALITY AND ATMOSPHERIC CONDITIONS, THE ENGINEER ASSUMES NO LIABILITY OR RESPONSIBILITY OF THE LIFE SPAN OF THE SPRINKLER SYSTEM DUE TO MICRO-BIOLOGICALLY INFLUENCED CORROSION (MIC). THE SPRINKLER CONTRACTOR AND/OR THE GENERAL CONTRACTOR SHALL HAVE THE SPRINKLER SYSTEM TESTED AND TREATED (IF NECESSARY) FOR PROTECTION AGAINST MICRO-BIOLOGICALLY INFLUENCED CORROSION (MIC).

24. INSTALLATION OF THE SPRINKLER SYSTEM SHALL NOT BE STARTED UNTIL DRAWINGS, SPECIFICATIONS, CALCULATIONS, ETC. HAVE BEEN APPROVED BY DSA.

25. FUME HOOD DUCTS SHALL BE PROTECTED BY PENDENT SPRINKLERS IN ACCORDANCE WITH CFC 2019 903.2.11.4 AND CMC 2019 506.8. SPRINKLERS SHALL BE INSTALLED AT EACH CHANGE IN DIRECTION AND AT THE TOP OF THE VERTICAL DUCT.

26. THE INSTALLATING CONTRACT SHALL SUBMIT THEIR OWN SHOP DRAWINGS, CALCULATIONS, AND TECHINCAL SUBMITALS FOR REVIEW PRIOR TO INSTALLATION.

27. IN AREAS WITH MECHANICAL PLATFORMS AND/OR CLOUD CEILINGS, THE OVERHEAD IS PROTECTED BY UPRIGHTS WHILE DROPPING DOWN WITH PENDENTS TO PROTECT BELOW THE PLATFORM/CLOUD.

28. ALL PENDENT SPRINKLERS ARE CONNECTED UTILIZING VICTAULIC VICFLEX 31" FLEX HOSES. AB1 BRACKETS SHALL BE USED TO MOUNT IN ACT CEILINGS AND AB5 BRACKETS USED ON ANY FRAMED CEILINGS.

29. ALL UNDERGROUND PIPING SHALL BE C900 OR EQUIVALENT.

PLOT DATE: 11/10/2022 9:30:52 PM

FOR BID ONLY

Teter, LLP expressly reserves its common law copyright and other property rights in these plans. This document, the ideas and designs incorporated herein, as an instrument of professional service, is not to be used in whole or in part, for any other project without prior written authorization.

MARK	DATE	DESCRIPTION
B	11/1/22	DSA BACKCHECK

TETER, LLP
FRESNO HEADQUARTERS
VISALIA | BAKERSFIELD | MODESTO | SAN LUIS OBISPO
ARCHITECTS ENGINEERS CONNECTED

TULARE CAMPUS CTE
COLLEGE OF THE SEQUOIAS
4999 E. BARDSLEY AVE.
TULARE, CA

DRAWING TITLE
FIRE PROTECTION - GENERAL INFORMATION

PROJECT NO.
19-12032

DRAWING
FP001

C:\Users\wacon\Box\Projects 2021\21-048 BFP - College of the Sequoias - CTE Building\21-048 BFP - College of the Sequoias - CTE Building2_Submittals\Drawings\12032-FP-COS Tulare CTE.rvt

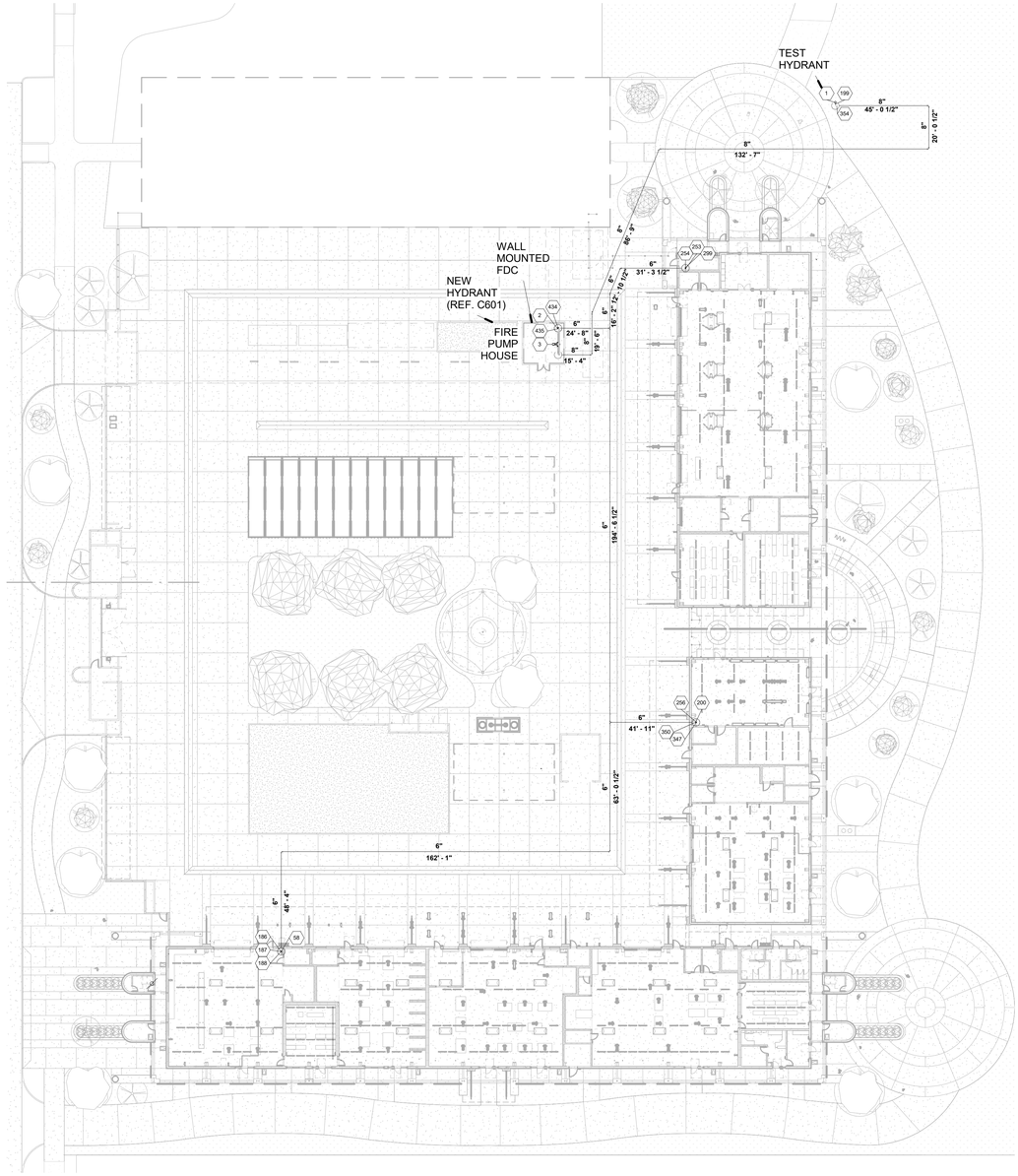

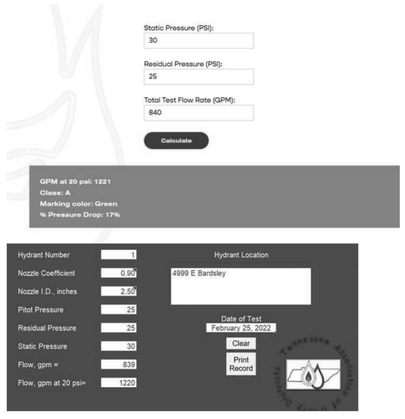

1 FIRE PROTECTION - SITE PLAN

1" = 30'-0"

SITE PLAN NOTES

1. FIRE PROTECTION SERVICE AND ALL ITS APPURTENANCES ARE SHOWN FOR HYDRAULIC CALCULATION PURPOSES ONLY.
2. LOCATION OF LINES AND EQUIPMENT ARE FOR REFERENCE ONLY HOWEVER THE FIRE SERVICE LINE SHALL BE A MINIMUM OF 4" DIAMETER.
3. SITE CIVIL PLANS SHALL BE CONSULTED FOR ALL UNDERGROUND WORK. UNDERGROUND IS NOT IN THE FIRE PROTECTION SCOPE. FP SCOPE BEGINS 1-0" AFF IN THE RISER ROOM.
4. ANY DISCREPANCY BETWEEN THIS SITE PLAN AND THOSE OF THE SITE CIVIL DESIGN SHALL DEFER TO THE SITE CIVIL PLAN IN ALL INSTANCES.
5. DISTANCES SHOWN REFLECT CUT LENGTH DISTANCES AND ACCOUNT FOR FITTING TAKEOUTS. ACTUAL LENGTHS FROM POINT TO POINT SHOULD BE TAKEN FROM CIVIL PLANS.

WATERFLOW TEST INFORMATION	
STATIC	30psi
RESIDUAL	25psi
FLOW	840gpm

FEBCO MASTERSERIES 856 DCDA LOSS CURVE

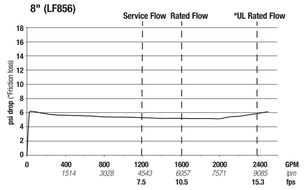

FOR BID ONLY

Teter, LLP expressly reserves its common law copyright and other property rights in these plans. This document, the ideas and designs incorporated herein, as an instrument of professional service, is not to be used in whole or part, for any other project without prior written authorization.

MARK	DATE	DESCRIPTION
B	11/1/22	DSA BACKCHECK

TETER, LLP
FRESNO HEADQUARTERS
VISALIA | BAKERSFIELD | MODESTO | SAN LUIS OBISPO
ARCHITECTS ENGINEERS CONNECTED

TULARE CAMPUS CTE
COLLEGE OF THE SEQUOIAS
4999 E. BARDSLEY AVE.
TULARE, CA.

DRAWING TITLE
FIRE PROTECTION - SITE PLAN

PROJECT NO.
19-12032

DRAWING
FP002

PLOT DATE: 10/27/2022 10:53:02 PM

C:\Users\wacor\Box\Projects 2021\21-048 BFP - College of the Sequoias - CTE Building\21-048 BFP - College of the Sequoias - CTE Building\2_Submittals\Drawings\12032-FP-COS Tulare CTE.rvt

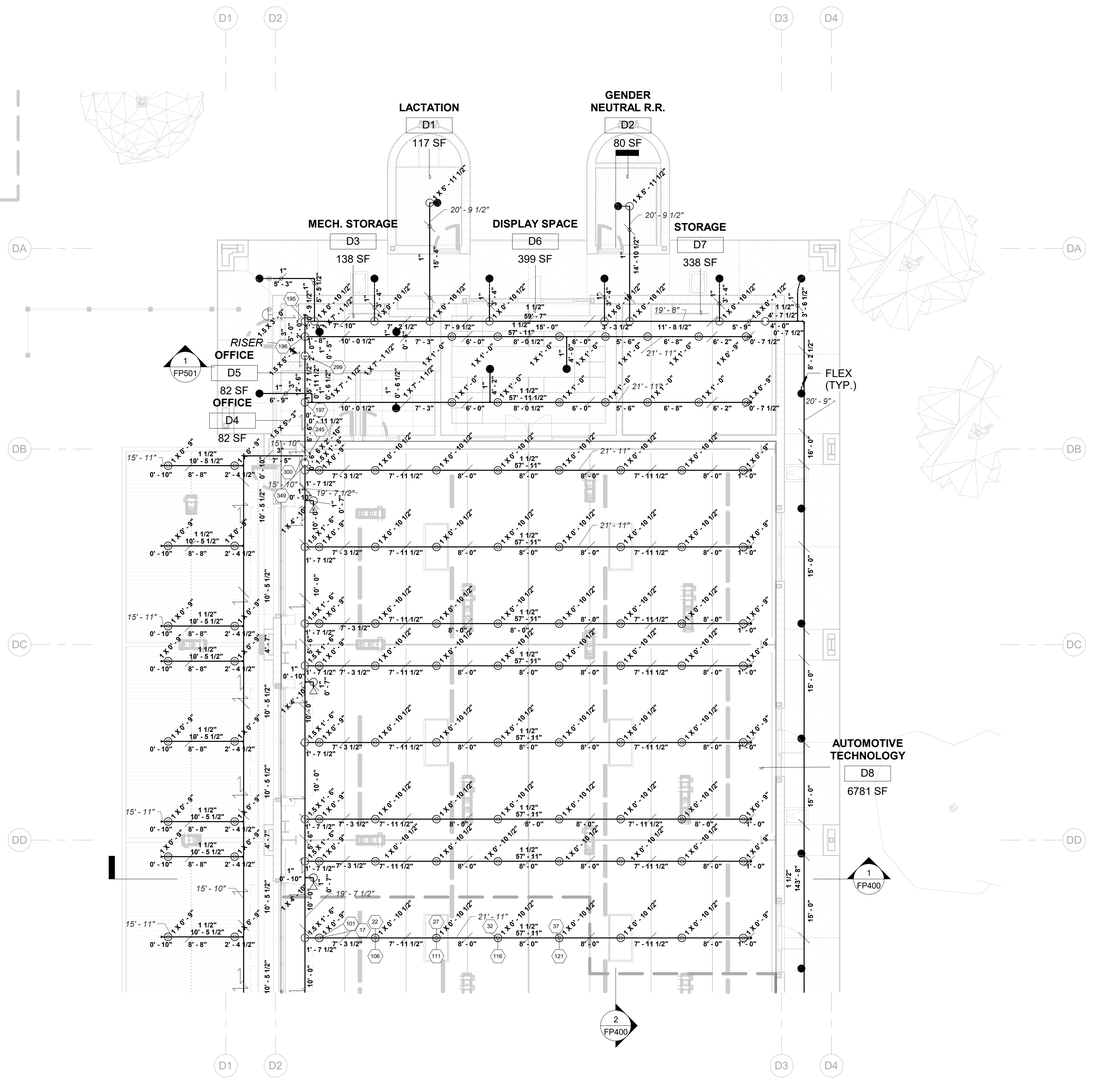

1 FIRE PROTECTION - BUILDING D NORTH

1/8" = 1'-0"

0' 4' 8' 16'

BUILDING NOTES

CONSTRUCTION TYPE: II-B SPRINKLERED
SYSTEM DESIGNED AS PER NFPA #13 2016 EDITION

OCCUPANCY CLASSIFICATION(S) (CBC SECTION 302):
1. 'F-1', VOCATIONAL SHOPS FOR MODERATE HAZARD FABRICATION, ASSEMBLY, REPAIR & FINISHING
2. 'B', BUSINESS/COLLEGE CLASSROOMS AND STAFF OFFICES
3. 'S-1', MODERATE HAZARD STORAGE
4. 'A-3', CLASSROOMS WITH 50 OR MORE OCCUPANTS (ACCESSORY OCCUPANCY)

16,044 SQ. FT. OF TOTAL PROTECTED AREA PER STRUCTURE.

TOTAL FLOORS - 1

CONTRACTOR SHALL:

PROVIDE REQUIRED SIGNS & FLUSHING CONNECTIONS
CONTRACTORS MATERIAL AND TEST CERTIFICATES FOR ABOVE GROUND SHALL BE PROVIDED BY SPRINKLER CONTRACTOR
CONTRACTORS MATERIAL AND TEST CERTIFICATES FOR UNDERGROUND GROUND SHALL BE PROVIDED BY GC.

PIPE MATERIAL:

1" BRANCHLINE PIPE: SCH 40 BLACK STEEL WITH THREADED ENDS
1-1/2"- 6" RISER PIPE & MAINS: SCH 10 BLACK STEEL WITH GROOVED ENDS.

ALL DIMENSIONS & ELEVATIONS ARE CENTERLINE OF PIPE & STEEL UNLESS NOTED OTHERWISE

SYMBOLS LEGEND

6" 21'-0" 6'-0" 12'-0	PIPE DIAMETER, CUT LENGTH, AND SECTION LENGTHS
6" 21'-0	PIPE DIAMETER AND CUT LENGTH
	PIPE HANGER
	PIPE CHANGE IN ELEVATION
	LATERAL SWAY BRACE
	LONGITUDINAL SWAY BRACE
	4-WAY SWAY BRACE
	FLEX DROP
	HYDRAULIC NODE
	ALARM BELL
PAV	POTTER AIR VENT

SPRINKLER SCHEDULE

Sprinkler Symbol	Count	Manufacturer	Model	Orifice Size	K-Factor	Temperature Rating	Sprinkler Orientation	Finish
○	94	VICTAULIC Inc.	V2704	1/2"	5.6	200 °F	UPRIGHT	Brass
◁	3	VICTAULIC Inc.	V2709	1/2"	5.6	200 °F	HORIZONTAL SIDEWALL	White
●	21	VICTAULIC	V3802	1/2"	5.6	155 °F	CONCEALED	White

PLOT DATE: 10/27/2022 10:53:05 PM

FOR BID ONLY

Teter, LLP expressly reserves its statutory law copyright and other property rights in these plans. This document, the ideas and designs incorporated herein, as an instrument of professional service, is not to be used in whole or part, for any other project without prior written authorization.

MARK	DATE	DESCRIPTION
B	11/1/22	DSA BACKCHECK

TETER, LLP
FRESNO HEADQUARTERS
VISALIA | BAKERSFIELD | MODESTO | SAN LUIS OBISPO
ARCHITECTS ENGINEERS CONNECTED

TETER

TULARE CAMPUS CTE
COLLEGE OF THE SEQUOIAS
4999 E. BARDSLEY AVE.
TULARE, CA

DRAWING TITLE
FIRE PROTECTION - BUILDING D PIPING PLAN NORTH

PROJECT NO.
19-12032

DRAWING
FP100

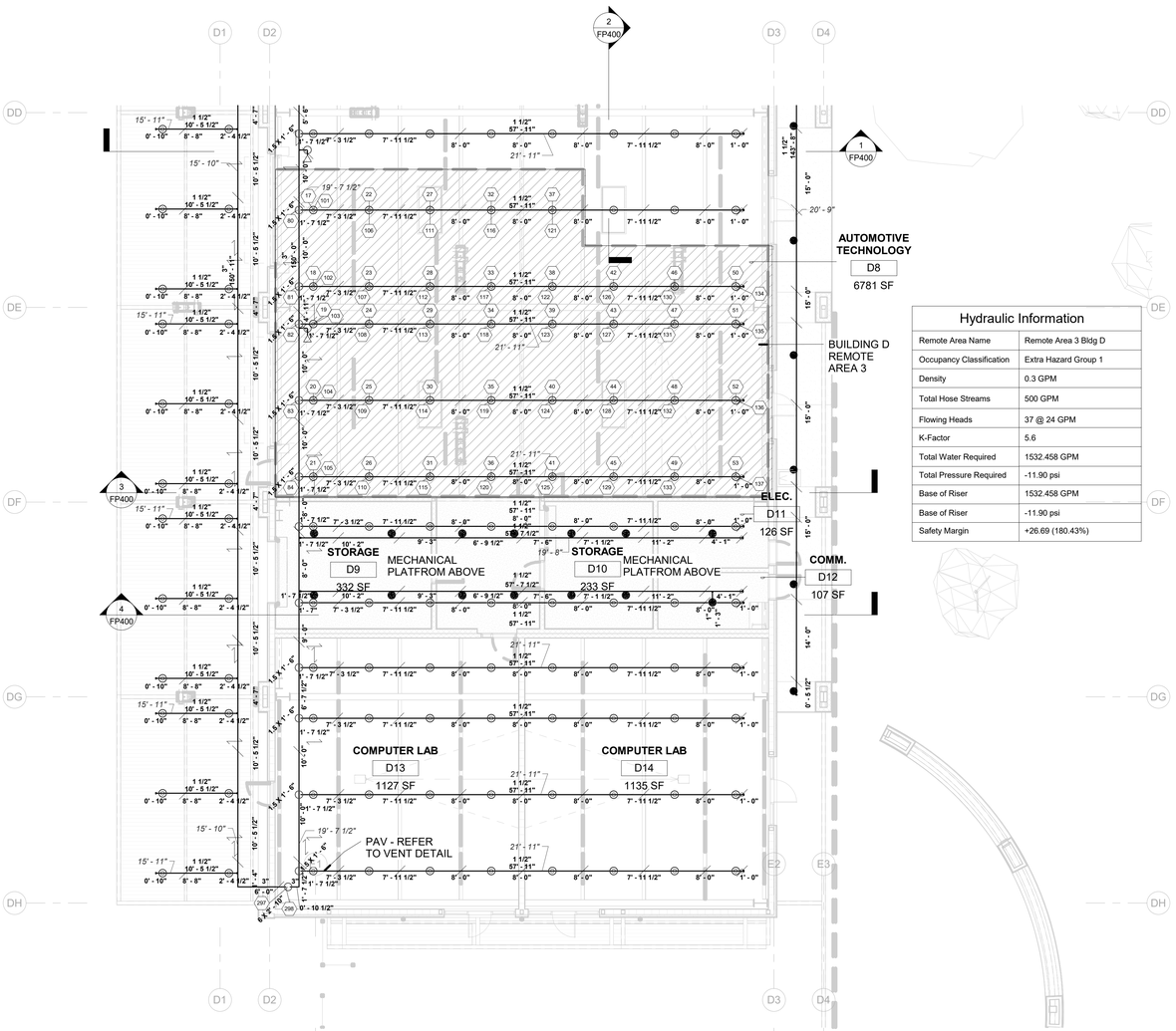

Hydraulic Information	
Remote Area Name	Remote Area 3 Bldg D
Occupancy Classification	Extra Hazard Group 1
Density	0.3 GPM
Total Hose Streams	500 GPM
Flowing Heads	37 @ 24 GPM
K-Factor	5.6
Total Water Required	1532.458 GPM
Total Pressure Required	-11.90 psi
Base of Riser	1532.458 GPM
Base of Riser	-11.90 psi
Safety Margin	+26.69 (180.43%)

1 FIRE PROTECTION - BUILDING D SOUTH

1/8" = 1'-0"

0' 4' 8' 16'

SPRINKLER SCHEDULE

Sprinkler Symbol	Count	Manufacturer	Model	Orifice Size	K-Factor	Temperature Rating	Sprinkler Orientation	Finish
○	120	VICTAULIC Inc.	V2704	1/2"	5.6	200 °F	UPRIGHT	Brass
◁	2	VICTAULIC Inc.	V2709	1/2"	5.6	200 °F	HORIZONTAL SIDEWALL	White
●	20	VICTAULIC	V3802	1/2"	5.6	155 °F	CONCEALED	White

SYMBOLS LEGEND

- PIPE DIAMETER, CUT LENGTH, AND SECTION LENGTHS
- PIPE DIAMETER AND CUT LENGTH
- PIPE HANGER
- PIPE CHANGE IN ELEVATION
- LATERAL SWAY BRACE
- LONGITUDINAL SWAY BRACE
- 4-WAY SWAY BRACE
- FLEX DROP
- HYDRAULIC NODE
- ALARM BELL
- PAV — POTTER AIR VENT

C:\Users\wacor\Box\Projects 2021\21-048 BFP - College of the Sequoias - CTE Building\21-048 BFP - College of the Sequoias - CTE Building\2_Submittals\Drawings\12032-FP-COS Tulare CTE.rvt

PLOT DATE: 10/27/2022 10:53:08 PM

FOR BID ONLY

Teter, LLP expressly reserves its common law copyright and other property rights in these plans. This document, the ideas and designs incorporated herein, as an instrument of professional service, is not to be used in whole or in part, for any other project without prior written authorization.

MARK	DATE	DESCRIPTION
B	11/1/22	DSA BACKCHECK

TETER, LLP
ARCHITECTS ENGINEERS CONNECTED
FRESNO HEADQUARTERS
VISALIA | BAKERSFIELD | MODESTO | SAN LUIS OBISPO

TULARE CAMPUS CTE
COLLEGE OF THE SEQUOIAS
4999 E. BARDSLEY AVE.
TULARE, CA

DRAWING TITLE
FIRE PROTECTION - BUILDING D PIPING PLAN SOUTH

PROJECT NO.
19-12032

DRAWING
FP101

C:\Users\wacor\Box\Projects 2021\21-048 BFP - College of the Sequoias - CTE Building\21-048 BFP - College of the Sequoias - CTE.rvt

PUMP HOUSE SPRINLKER NOTES

- SPRINKLER SYSTEM IN THE PUMP HOUSE IS SUPPLIED BY A STAND ALONE RISER SUPPLIED FROM A TEE ON THE DISCHARGE SIDE OF THE PUMP
- SYSTEM HAS BEEN DESIGNED TO EXTRA HAZARD GROUP 2 DUE TO THE STORAGE OF FUEL.

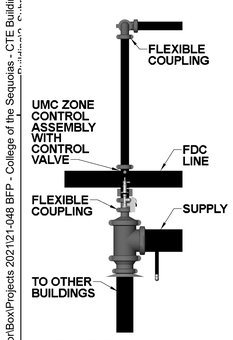

5 PUMP ROOM SPRINKLER RISER

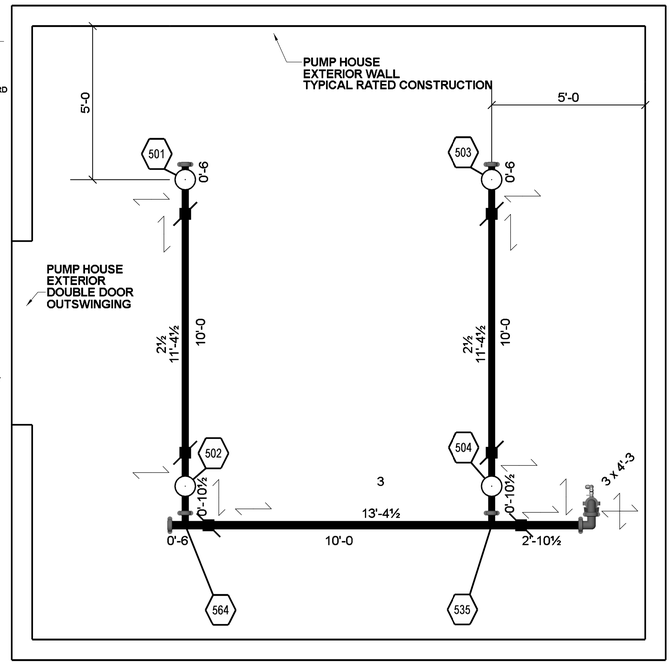

1 PUMP ROOM SPRINKLER LAYOUT
1/2"=1'-0"

SYMBOL LEGEND

DIA / LENGTH	SPRINKLER MAIN PIPING
DIA / LENGTH	SPRINKLER BRANCH PIPING
	PIPE HANGER
	OS&Y GATE VALVE
	SUPERVISED CONTROL VALVE
	GROOVED 90
	PUMP TEST MANIFOLD
	PIPE STAND
	WALL MOUNTED FDC

REFER TO SPRINKLER LEGEND FOR SPRINKLER SYMBOLS

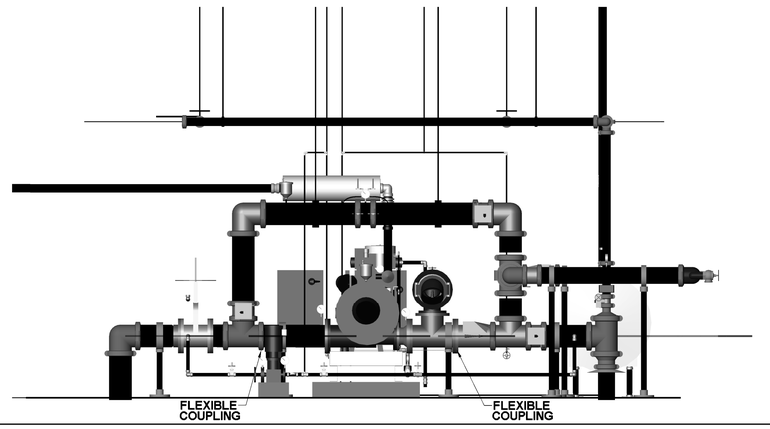

3 PUMP ROOM SECTION
1/2"=1'-0"

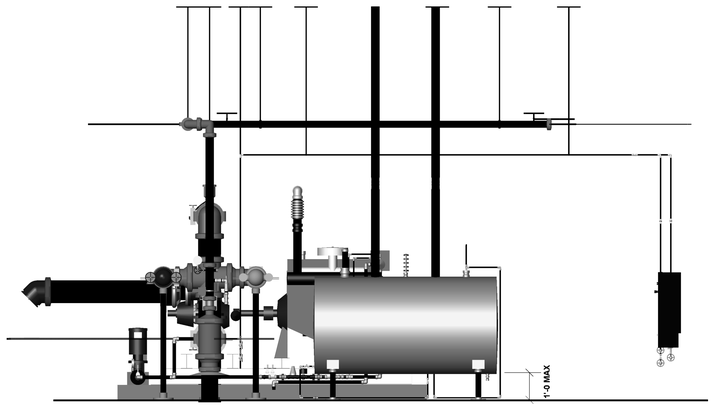

4 PUMP ROOM SECTION
1/2"=1'-0"

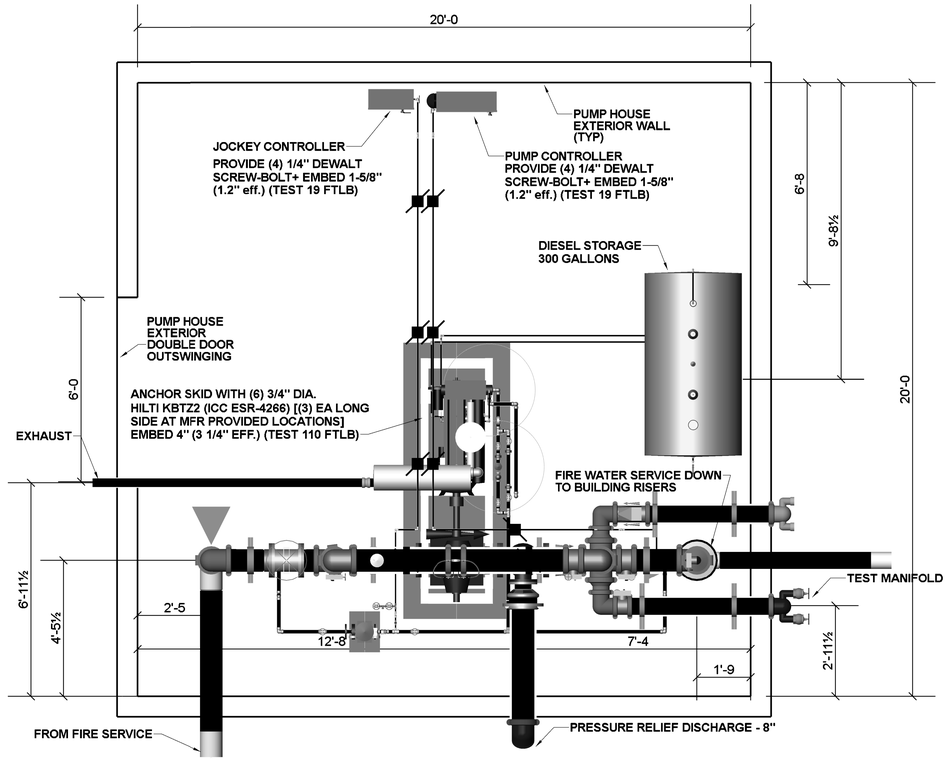

2 PUMP ROOM PUMP EQUIPMENT
1/2"=1'-0"

PUMP HOUSE NOTES

THE FOLLOWING INFORMATION FROM NFPA 20 SHALL BE ADHERED TO DURING CONSTRUCTION AND OPERATION OF THIS PUMP HOUSE:

4.13.3 HEAT.
4.13.3.1 AN APPROVED OR LISTED SOURCE OF HEAT SHALL BE PROVIDED FOR MAINTAINING THE TEMPERATURE OF A PUMP ROOM OR PUMP HOUSE, WHERE REQUIRED, ABOVE 40°F (4°C).
4.13.3.2 THE REQUIREMENTS OF 11.6.5 SHALL BE FOLLOWED FOR HIGHER TEMPERATURE REQUIREMENTS FOR INTERNAL COMBUSTION ENGINES.
4.13.4 NORMAL LIGHTING. ARTIFICIAL LIGHT SHALL BE PROVIDED IN A PUMP ROOM OR PUMP HOUSE.
4.13.5 EMERGENCY LIGHTING.
4.13.5.1 PUMP ROOMS SHALL BE PROVIDED WITH EMERGENCY LIGHTING.
4.13.5.2 THE INTENSITY OF ILLUMINATION IN THE PUMP ROOM(S) SHALL BE 3.0 FT-CANDLES (32.3 LUX), UNLESS OTHERWISE SPECIFIED BY A REQUIREMENT RECOGNIZED BY THE AUTHORITY HAVING JURISDICTION.
4.13.5.3 EMERGENCY LIGHTS SHALL NOT BE CONNECTED TO AN ENGINE-STARTING BATTERY.
4.13.5.4 THE EMERGENCY LIGHTING SHALL BE CAPABLE OF MAINTAINING THE LIGHTING LEVEL FOR A MINIMUM OF 2 HOURS.
4.13.6 VENTILATION. PROVISION SHALL BE MADE FOR VENTILATION OF A PUMP ROOM OR PUMP HOUSE.
4.13.7* DRAINAGE.
4.13.7.1 FLOORS SHALL BE PITCHED FOR ADEQUATE DRAINAGE OF ESCAPING WATER AWAY FROM CRITICAL EQUIPMENT SUCH AS THE PUMP, DRIVER, CONTROLLER, AND SO FORTH.
4.13.7.2 THE PUMP ROOM OR PUMP HOUSE SHALL BE PROVIDED WITH A FOOR DRAIN THAT WILL DISCHARGE TO A FROST-FREE LOCATION.

INCOMING SERVICE PENETRATES THROUGH FLOOR
OUTGOING TO BUILDINGS D, E, AND F, PENETRATES THROUGH FLOOR
FOR ALL WALL AND ROOF PENETRATIONS REFER TO FIRE PUMP HOUSE PLANS

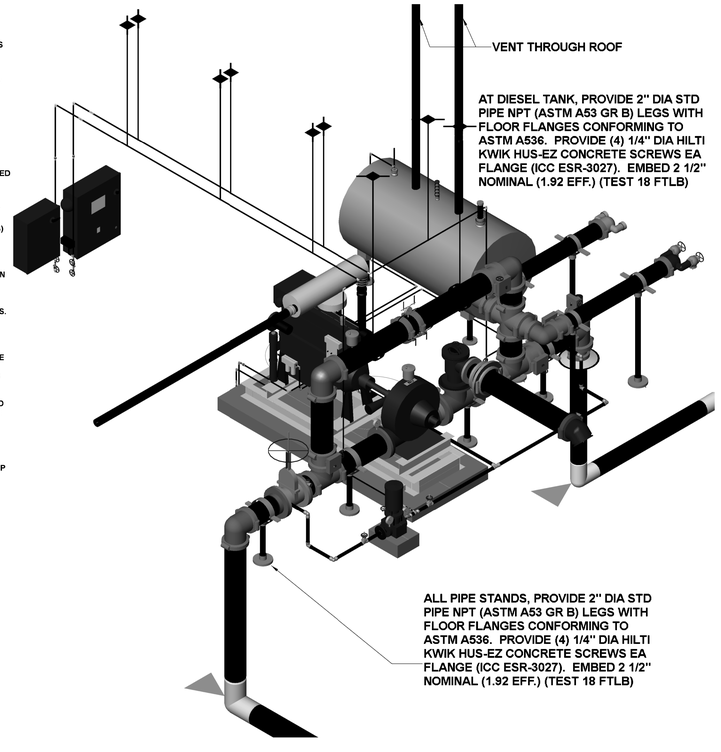

5 PUMP ROOM ISOMETRIC
1/2"=1'-0"

PLOT DATE: 10/27/2022 10:53:08 PM

FOR BID ONLY

Teter, LLP expressly reserves its common law copyright and other property rights in these plans. This document, the ideas and designs incorporated herein, as an instrument of professional service, is not to be used in whole or part, for any other project without prior written authorization.

MARK	DATE	DESCRIPTION
B	11/1/22	DSA BACKCHECK

TETER, LLP
ARCHITECTS ENGINEERS CONNECTED
FRESNO HEADQUARTERS
VISALIA | BAKERSFIELD | MODESTO | SAN LUIS OBISPO

TULARE CAMPUS CTE
COLLEGE OF THE SEQUOIAS
4999 E. BARDSLEY AVE.
TULARE, CA

DRAWING TITLE
FIRE PROTECTION - PUMP HOUSE AND PUMP PLAN

PROJECT NO.
19-12032

DRAWING
FP107

C:\Users\wacor\Box\Projects 2021\21-048 BFP - College of the Sequoias - CTE Building\21-048 BFP - College of the Sequoias - CTE Building\2_Submittals\Drawings\12032-FP-COS Tulare CTE.rvt

BUILDING NOTES

CONSTRUCTION TYPE: II-B SPRINKLERED
SYSTEM DESIGNED AS PER NFPA #13 2016 EDITION

OCCUPANCY CLASSIFICATION(S) (CBC SECTION 302):
1. 'F-1', VOCATIONAL SHOPS FOR MODERATE HAZARD FABRICATION, ASSEMBLY, REPAIR & FINISHING
2. 'B', BUSINESS/COLLEGE CLASSROOMS AND STAFF OFFICES
3. 'S-1', MODERATE HAZARD STORAGE
4. 'A-3', CLASSROOMS WITH 50 OR MORE OCCUPANTS (ACCESSORY OCCUPANCY)

10,204 SQ. FT. OF TOTAL PROTECTED AREA PER STRUCTURE.

TOTAL FLOORS - 1

CONTRACTOR SHALL:

PROVIDE REQUIRED SIGNS & FLUSHING CONNECTIONS
CONTRACTORS MATERIAL AND TEST CERTIFICATES FOR ABOVE GROUND SHALL BE PROVIDED BY SPRINKLER CONTRACTOR
CONTRACTORS MATERIAL AND TEST CERTIFICATES FOR UNDERGROUND GROUND SHALL BE PROVIDED BY GC.

PIPE MATERIAL:

1" BRANCHLINE PIPE: SCH 40 BLACK STEEL WITH THREADED ENDS
1-1/2"- 6" RISER PIPE & MAINS: SCH 10 BLACK STEEL WITH GROOVED ENDS.

ALL DIMENSIONS & ELEVATIONS ARE CENTERLINE OF PIPE & STEEL UNLESS NOTED OTHERWISE

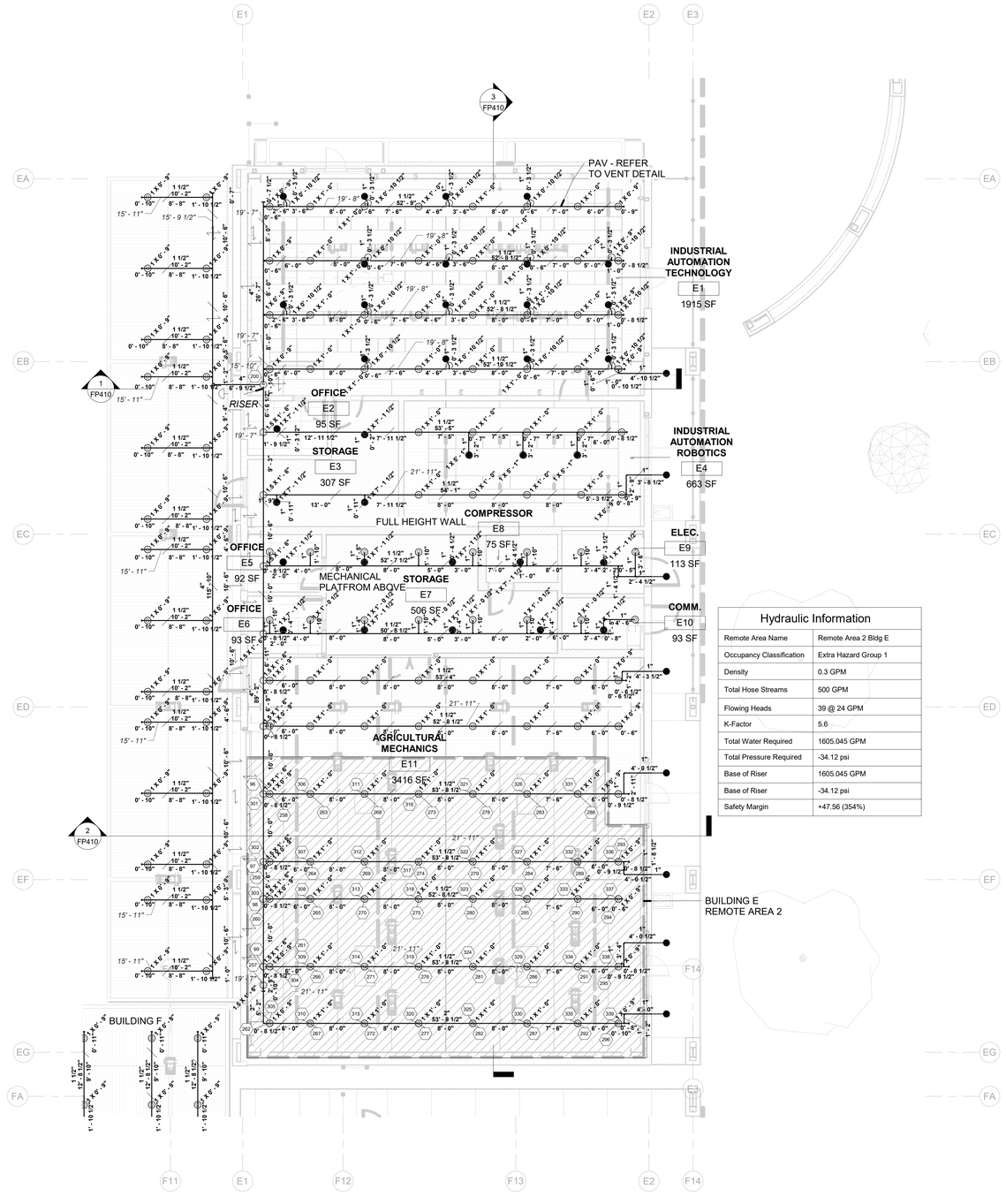

Hydraulic Information	
Remote Area Name	Remote Area 2 Bldg E
Occupancy Classification	Extra Hazard Group 1
Density	0.3 GPM
Total Hose Streams	500 GPM
Flowing Heads	39 @ 24 GPM
K-Factor	5.6
Total Water Required	1605.045 GPM
Total Pressure Required	-34.12 psi
Base of Riser	1605.045 GPM
Base of Riser	-34.12 psi
Safety Margin	+47.56 (354%)

1 FIRE PROTECTION - BUILDING E PIPING PLAN

1/8" = 1'-0"

0' 4' 8' 16'

SYMBOLS LEGEND

- PIPE DIAMETER, CUT LENGTH, AND SECTION LENGTHS
- PIPE DIAMETER AND CUT LENGTH
- PIPE HANGER
- PIPE CHANGE IN ELEVATION
- LATERAL SWAY BRACE
- LONGITUDINAL SWAY BRACE
- 4-WAY SWAY BRACE
- FLEX DROP
- HYDRAULIC NODE
- ALARM BELL
- PAV POTTER AIR VENT

SPRINKLER SCHEDULE

Sprinkler Symbol	Count	Manufacturer	Model	Orifice Size	K-Factor	Temperature Rating	Sprinkler Orientation	Finish
○	148	VICTAULIC Inc.	V2704	1/2"	5.6	200 °F	UPRIGHT	Brass
◁	1	VICTAULIC Inc.	V2709	1/2"	5.6	200 °F	HORIZONTAL SIDEWALL	White
●	42	VICTAULIC	V3802	1/2"	5.6	155 °F	CONCEALED	White

PLOT DATE: 10/27/2022 10:53:16 PM

FOR BID ONLY

Teter, LLP expressly reserves its common law copyright and other property rights in these plans. This document, the ideas and designs incorporated herein, as an instrument of professional service, is not to be used in whole or part, for any other project without prior written authorization.

MARK	DATE	DESCRIPTION
B	11/1/22	DSA BACKCHECK

TETER, LLP
ARCHITECTS ENGINEERS CONNECTED
FRESNO HEADQUARTERS
VISALIA | BAKERSFIELD | MODESTO | SAN LUIS OBISPO

TULARE CAMPUS CTE
COLLEGE OF THE SEQUOIAS
4999 E. BARDSLEY AVE.
TULARE, CA

DRAWING TITLE
FIRE PROTECTION - BUILDING E PIPING PLAN

PROJECT NO.
19-12032

DRAWING
FP110

C:\Users\wacor\Box\Projects 2021\21-048 BFP - College of the Sequoias - CTE Building\21-048 BFP - College of the Sequoias - CTE Building\2_Submittals\Drawings\12032-FP-COS Tulare CTE.rvt

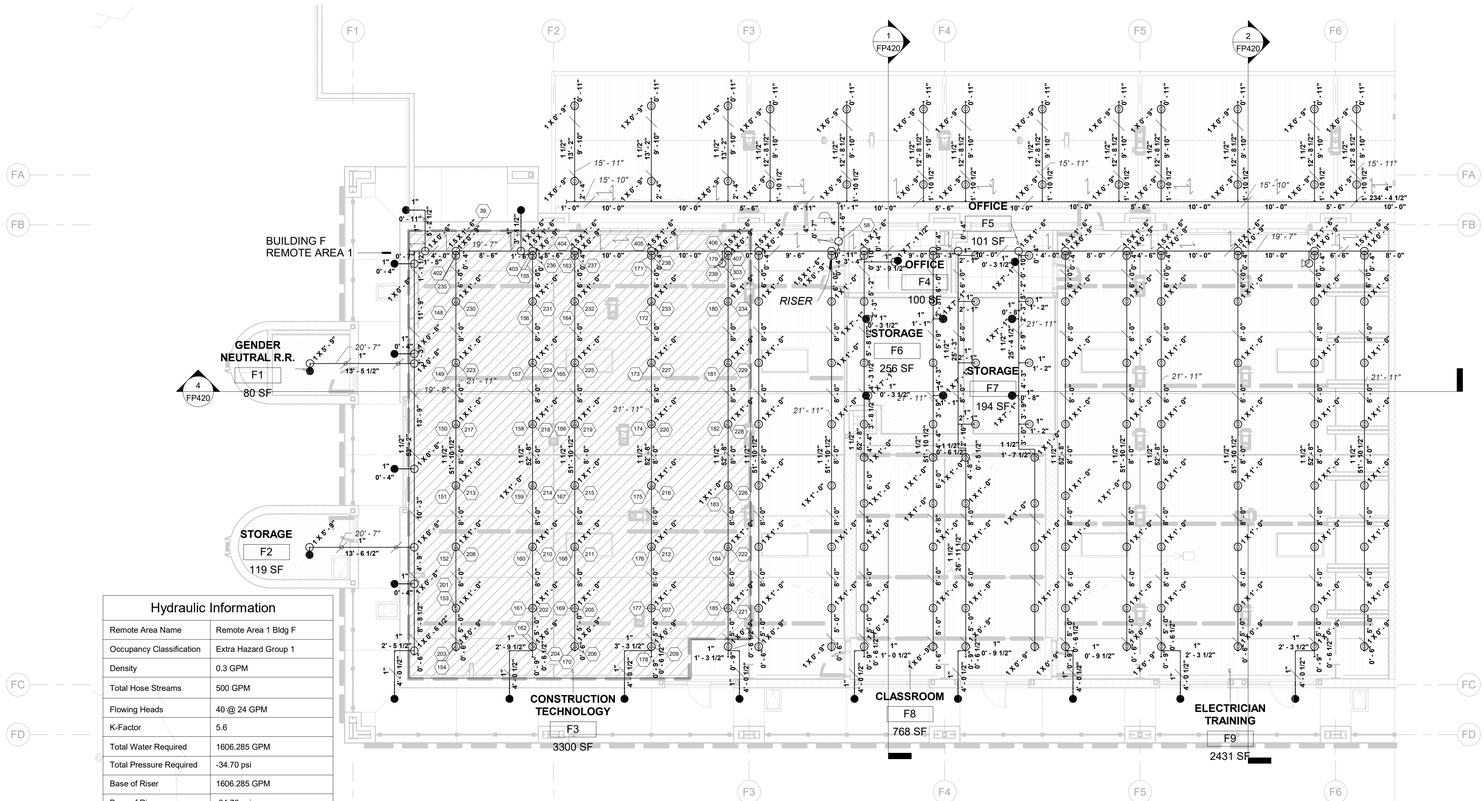

Hydraulic Information	
Remote Area Name	Remote Area 1 Bldg F
Occupancy Classification	Extra Hazard Group 1
Density	0.3 GPM
Total Hose Streams	500 GPM
Flowing Heads	40 @ 24 GPM
K-Factor	5.6
Total Water Required	1606.285 GPM
Total Pressure Required	-34.70 psi
Base of Riser	1606.285 GPM
Base of Riser	-34.70 psi
Safety Margin	+48.12 (358.78%)

1 FIRE PROTECTION - BUILDING F PIPING PLAN WEST

1/8" = 1'-0"

0' 4' 8' 16'

BUILDING NOTES

CONSTRUCTION TYPE: II-B SPRINKLERED
SYSTEM DESIGNED AS PER NFPA #13 2016 EDITION

OCCUPANCY CLASSIFICATION(S) (CBC SECTION 302):
1. 'F-1', VOCATIONAL SHOPS FOR MODERATE HAZARD FABRICATION, ASSEMBLY, REPAIR & FINISHING
2. 'B', BUSINESS/COLLEGE CLASSROOMS AND STAFF OFFICES
3. 'S-1', MODERATE HAZARD STORAGE
4. 'A-3', CLASSROOMS WITH 50 OR MORE OCCUPANTS (ACCESSORY OCCUPANCY)

26,571 SQ. FT. OF TOTAL PROTECTED AREA PER STRUCTURE.

TOTAL FLOORS - 1

CONTRACTOR SHALL:

PROVIDE REQUIRED SIGNS & FLUSHING CONNECTIONS
CONTRACTORS MATERIAL AND TEST CERTIFICATES FOR ABOVE GROUND SHALL BE PROVIDED BY SPRINKLER CONTRACTOR
CONTRACTORS MATERIAL AND TEST CERTIFICATES FOR UNDERGROUND GROUND SHALL BE PROVIDED BY GC.

PIPE MATERIAL:

1" BRANCHLINE PIPE: SCH 40 BLACK STEEL WITH THREADED ENDS
1-1/2"- 6" RISER PIPE & MAINS: SCH 10 BLACK STEEL WITH GROOVED ENDS.

ALL DIMENSIONS & ELEVATIONS ARE CENTERLINE OF PIPE & STEEL UNLESS NOTED OTHERWISE

SYMBOLS LEGEND

- PIPE DIAMETER, CUT LENGTH, AND SECTION LENGTHS
- PIPE DIAMETER AND CUT LENGTH
- PIPE HANGER
- PIPE CHANGE IN ELEVATION
- LATERAL SWAY BRACE
- LONGITUDINAL SWAY BRACE
- 4-WAY SWAY BRACE
- FLEX DROP
- HYDRAULIC NODE
- ALARM BELL
- PAV POTTER AIR VENT

SPRINKLER SCHEDULE

Sprinkler Symbol	Count	Manufacturer	Model	Orifice Size	K-Factor	Temperature Rating	Sprinkler Orientation	Finish
○	166	VICTAULIC Inc.	V2704	1/2"	5.6	200 °F	UPRIGHT	Brass
◁	2	VICTAULIC Inc.	V2709	1/2"	5.6	200 °F	HORIZONTAL SIDEWALL	White
●	25	VICTAULIC	V3802	1/2"	5.6	155 °F	CONCEALED	White

PLOT DATE: 10/27/2022 10:53:29 PM

FOR BID ONLY

Teter, LLP expressly reserves its common law copyright and other property rights in these plans. This document, the ideas and designs incorporated herein, as an instrument of professional service, is not to be used in whole or part, for any other project without prior written authorization.

MARK	DATE	DESCRIPTION
B	11/1/22	DSA BACKCHECK

TETER, LLP
FRESNO HEADQUARTERS
VISALIA | BAKERSFIELD | MODESTO | SAN LUIS OBISPO
ARCHITECTS ENGINEERS CONNECTED

TULARE CAMPUS CTE
COLLEGE OF THE SEQUOIAS
4999 E. BARDSLEY AVE.
TULARE, CA

DRAWING TITLE
FIRE PROTECTION - BUILDING F PIPING PLAN WEST

PROJECT NO.
19-12032

DRAWING
FP120

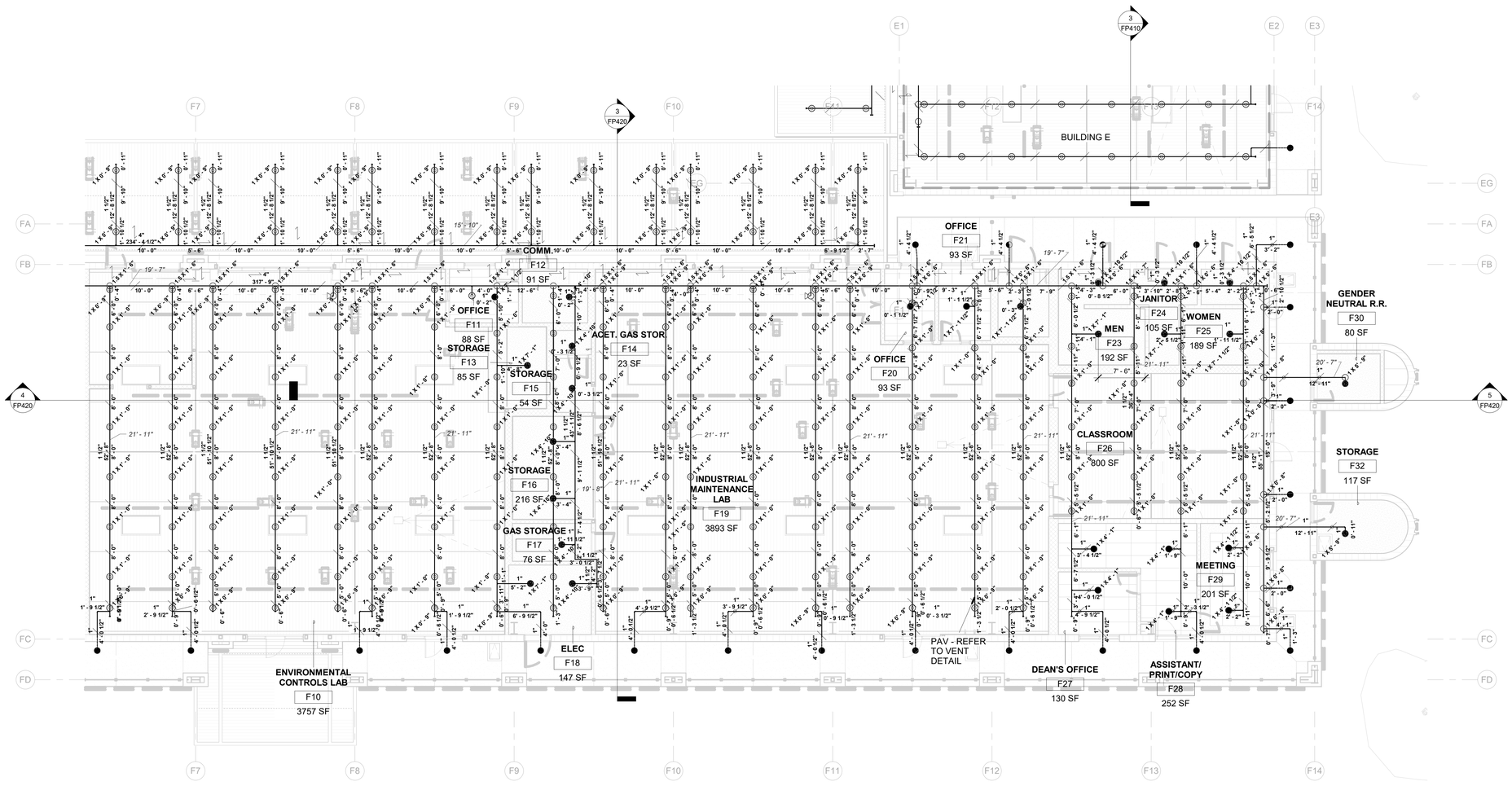

1 FIRE PROTECTION - BUILDING F PIPING PLAN EAST

1/8" = 1'-0"

0' 4' 8' 16'

SPRINKLER SCHEDULE

Sprinkler Symbol	Count	Manufacturer	Model	Orifice Size	K-Factor	Temperature Rating	Sprinkler Orientation	Finish
○	261	VICTAULIC Inc.	V2704	1/2"	5.6	200 °F	UPRIGHT	Brass
◁	2	VICTAULIC Inc.	V2709	1/2"	5.6	200 °F	HORIZONTAL SIDEWALL	White
●	50	VICTAULIC	V3802	1/2"	5.6	155 °F	CONCEALED	White

SYMBOLS LEGEND

- 6" 21'-0" 9'-0" 12'-0" PIPE DIAMETER, CUT LENGTH, AND SECTION LENGTHS
- 6" 21'-0" PIPE DIAMETER AND CUT LENGTH
- PIPE HANGER
- PIPE CHANGE IN ELEVATION
- LATERAL SWAY BRACE
- LONGITUDINAL SWAY BRACE
- 4-WAY SWAY BRACE
- FLEX DROP
- HYDRAULIC NODE
- ALARM BELL
- PAV POTTER AIR VENT

FOR BID ONLY

Teter, LLP expressly reserves its common law copyright and other property rights in these plans. This document, the ideas and designs incorporated herein, as an instrument of professional service, is not to be used in whole or in part, for any other project without prior written authorization.

MARK	DATE	DESCRIPTION
B	11/1/22	DSA BACKCHECK

TETER, LLP
FRESNO HEADQUARTERS
VISALIA | BAKERSFIELD | MODESTO | SAN LUIS OBISPO
ARCHITECTS ENGINEERS CONNECTED

TULARE CAMPUS CTE
COLLEGE OF THE SEQUOIAS
4999 E. BARDSLEY AVE.
TULARE, CA

DRAWING TITLE
FIRE PROTECTION - BUILDING F PIPING PLAN EAST

PROJECT NO.
19-12032

DRAWING
FP121

C:\Users\wacor\Box\Projects 2021\21-048 BFP - College of the Sequoias - CTE Building\21-048 BFP - College of the Sequoias - CTE Building\2_Submittals\Drawings\12032-FP-COS Tulare CTE.rvt

PLOT DATE: 10/27/2022 10:53:46 PM

C:\Users\wacor\Box\Projects 2021\21-048 BFP - College of the Sequoias - CTE Building\21-048 BFP - College of the Sequoias - CTE Building\2_Submittals\Drawings\12032-FP-COS Tulare CTE.rvt

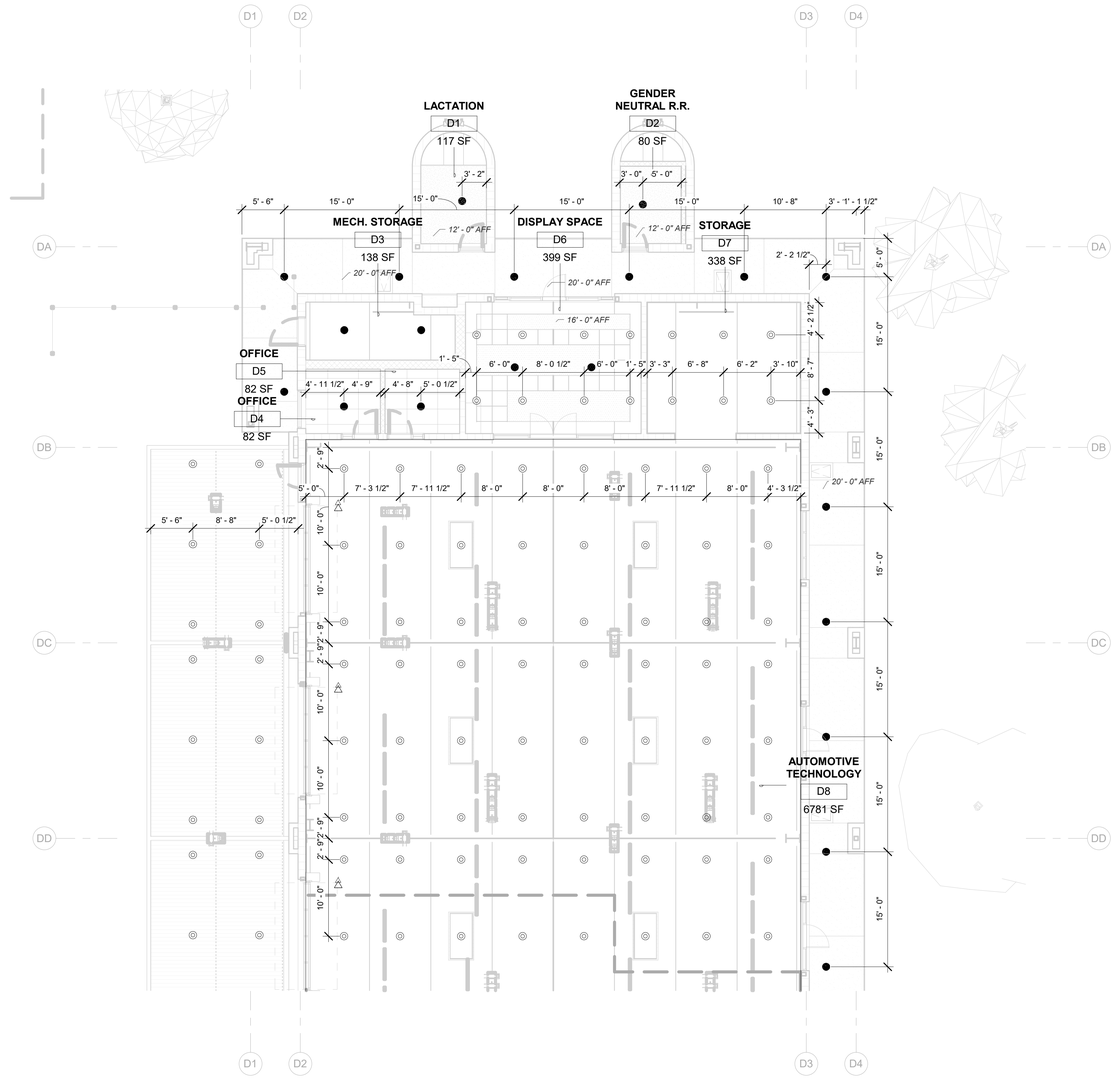

1 FIRE PROTECTION - BUILDING D NORTH RCP

1/8" = 1'-0"

0' 4' 8' 16'

SPRINKLER SCHEDULE

Sprinkler Symbol	Count	Manufacturer	Model	Orifice Size	K-Factor	Temperature Rating	Sprinkler Orientation	Finish
○	94	VICTAULIC Inc.	V2704	1/2"	5.6	200 °F	UPRIGHT	Brass
◁	3	VICTAULIC Inc.	V2709	1/2"	5.6	200 °F	HORIZONTAL SIDEWALL	White
●	21	VICTAULIC	V3802	1/2"	5.6	155 °F	CONCEALED	White

PLOT DATE: 10/27/2022 10:53:49 PM

FOR BID ONLY

Teter, LLP expressly reserves its statutory law copyright and other property rights in these plans. This document, the ideas and designs incorporated herein, as an instrument of professional service, is not to be used in whole or part, for any other project without prior written authorization.

MARK	DATE	DESCRIPTION
B	11/1/22	DSA BACKCHECK

TETER, LLP
FRESNO HEADQUARTERS
VISALIA | BAKERSFIELD | MODESTO | SAN LUIS OBISPO
ARCHITECTS ENGINEERS CONNECTED

TULARE CAMPUS CTE
COLLEGE OF THE SEQUOIAS
4999 E. BARDSLEY AVE.
TULARE, CA

DRAWING TITLE
FIRE PROTECTION - BUILDING D REFLECTED CEILING PLAN NORTH

PROJECT NO.
19-12032

DRAWING
FP200

C:\Users\wacor\Box\Projects 2021\21-048 BFP - College of the Sequoias - CTE Building\21-048 BFP - College of the Sequoias - CTE Building2_Submittals\Drawings\12032-FP-COS Tulare CTE.rvt

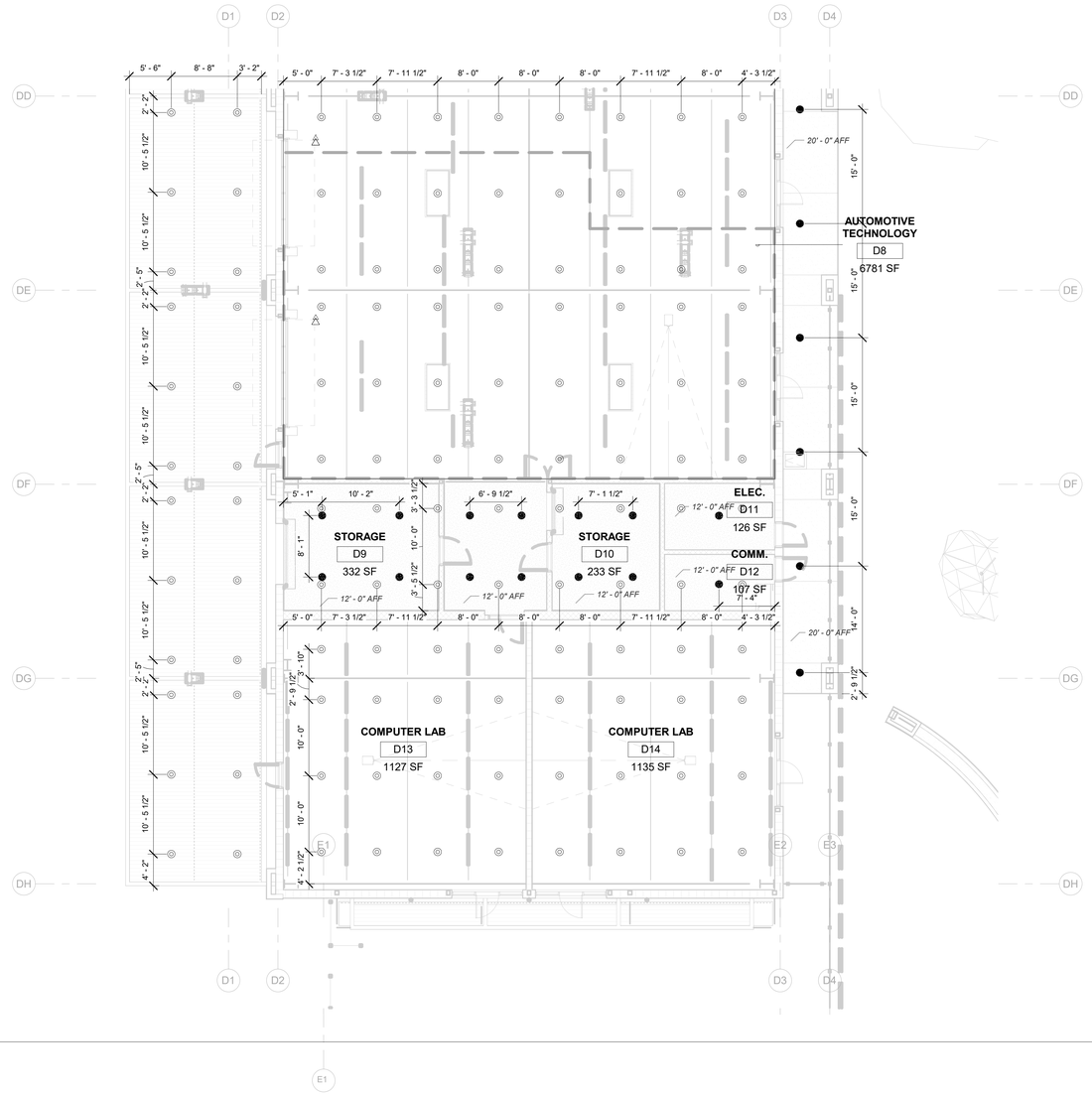

1 FIRE PROTECTION - BUILDING D SOUTH RCP

1/8" = 1'-0"

0' 4' 8' 16'

SPRINKLER SCHEDULE

Sprinkler Symbol	Count	Manufacturer	Model	Orifice Size	K-Factor	Temperature Rating	Sprinkler Orientation	Finish
○	120	VICTAULIC Inc.	V2704	1/2"	5.6	200 °F	UPRIGHT	Brass
◁	2	VICTAULIC Inc.	V2709	1/2"	5.6	200 °F	HORIZONTAL SIDEWALL	White
●	20	VICTAULIC	V3802	1/2"	5.6	155 °F	CONCEALED	White

FOR BID ONLY

Teter, LLP expressly reserves its common law copyright and other property rights in these plans. This document, the ideas and designs incorporated herein, as an instrument of professional service, is not to be used in whole or part, for any other project without prior written authorization.

MARK	DATE	DESCRIPTION
B	11/1/22	DSA BACKCHECK

TETER, LLP
FRESNO HEADQUARTERS
VISALIA | BAKERSFIELD | MODESTO | SAN LUIS OBISPO
ARCHITECTS ENGINEERS CONNECTED

TULARE CAMPUS CTE
COLLEGE OF THE SEQUOIAS
4999 E. BARDSLEY AVE.
TULARE, CA

DRAWING TITLE
FIRE PROTECTION - BUILDING D REFLECTED CEILING PLAN SOUTH

PROJECT NO.
19-12032

DRAWING
FP201

PLOT DATE: 10/27/2022 10:53:50 PM

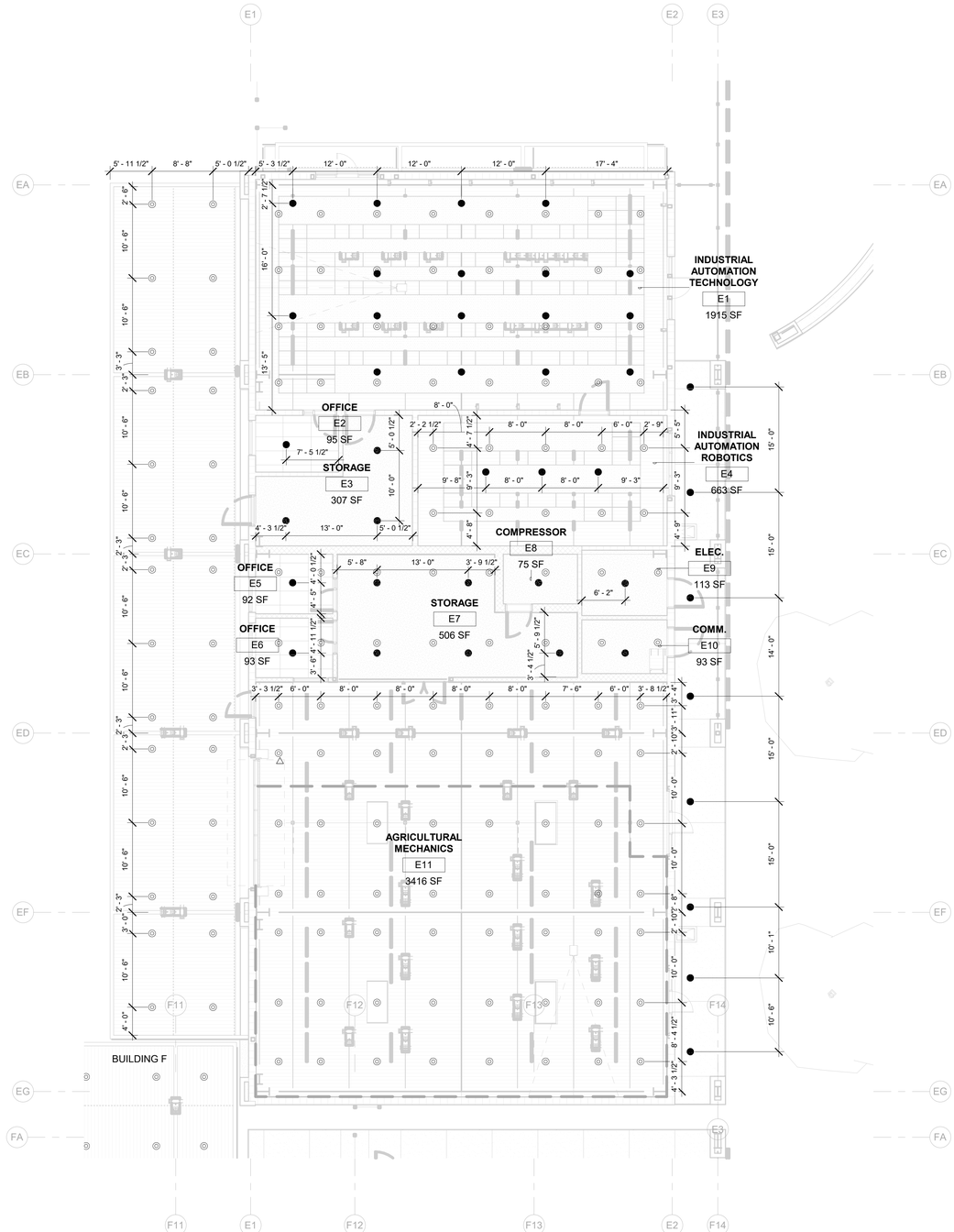

1 FIRE PROTECTION - BUILDING E RCP

1/8" = 1'-0"

0' 4' 8' 16'

SPRINKLER SCHEDULE

Sprinkler Symbol	Count	Manufacturer	Model	Orifice Size	K-Factor	Temperature Rating	Sprinkler Orientation	Finish
○	148	VICTAULIC Inc.	V2704	1/2"	5.6	200 °F	UPRIGHT	Brass
◁	1	VICTAULIC Inc.	V2709	1/2"	5.6	200 °F	HORIZONTAL SIDEWALL	White
●	42	VICTAULIC	V3802	1/2"	5.6	155 °F	CONCEALED	White

C:\Users\wacor\Box\Projects 2021\21-048 BFP - College of the Sequoias - CTE Building\21-048 BFP - College of the Sequoias - CTE Building2_Submittals\Drawings\12032-FP-COS Tulare CTE.rvt

PLOT DATE: 10/27/2022 10:53:52 PM

FOR BID ONLY

Teter, LLP expressly reserves its common law copyright and other property rights in these plans. This document, the ideas and designs incorporated herein, as an instrument of professional service, is not to be used in whole or part, for any other project without prior written authorization.

MARK	DATE	DESCRIPTION
B	11/1/22	DSA BACKCHECK

TETER, LLP
FRESNO HEADQUARTERS
VISALIA | BAKERSFIELD | MODESTO | SAN LUIS OBISPO
ARCHITECTS ENGINEERS CONNECTED

TULARE CAMPUS CTE
COLLEGE OF THE SEQUOIAS
4999 E. BARDSLEY AVE.
TULARE, CA

DRAWING TITLE
FIRE PROTECTION - BUILDING E REFLECTED CEILING PLAN

PROJECT NO.
19-12032

DRAWING
FP210

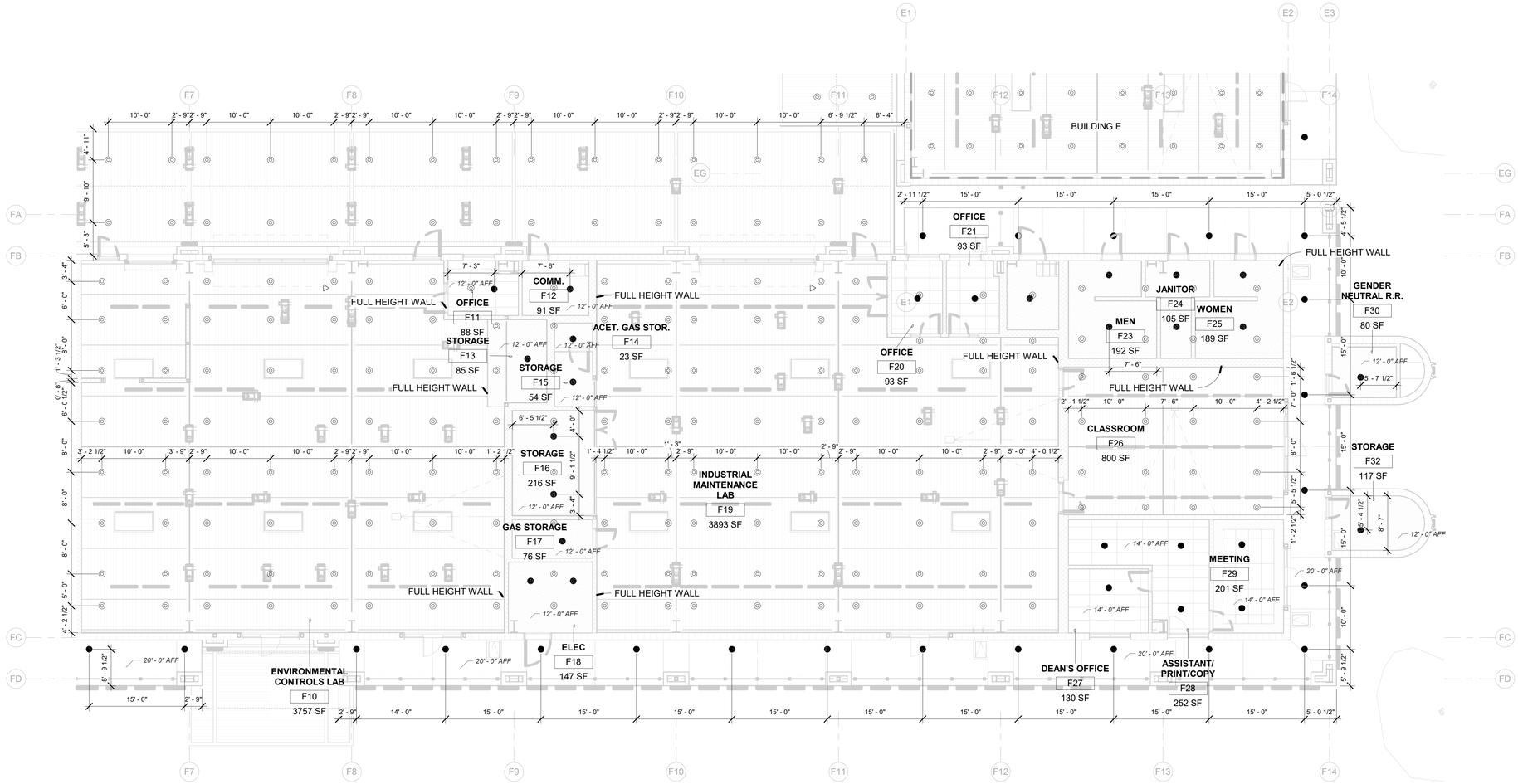

1 FIRE PROTECTION - BUILDING F EAST RCP

1/8" = 1'-0"

0' 4' 8' 16'

SPRINKLER SCHEDULE

Sprinkler Symbol	Count	Manufacturer	Model	Orifice Size	K-Factor	Temperature Rating	Sprinkler Orientation	Finish
○	261	VICTAULIC Inc.	V2704	1/2"	5.6	200 °F	UPRIGHT	Brass
◁	2	VICTAULIC Inc.	V2709	1/2"	5.6	200 °F	HORIZONTAL SIDEWALL	White
●	50	VICTAULIC	V3802	1/2"	5.6	155 °F	CONCEALED	White

FOR BID ONLY

Teter, LLP expressly reserves its common law copyright and other property rights in these plans. This document, the ideas and designs incorporated herein, as an instrument of professional service, is not to be used in whole or in part, for any other project without prior written authorization.

MARK	DATE	DESCRIPTION
B	11/1/22	DSA BACKCHECK

TETER, LLP
FRESNO HEADQUARTERS
VISALIA | BAKERSFIELD | MODESTO | SAN LUIS OBISPO
ARCHITECTS ENGINEERS CONNECTED

TETER

TULARE CAMPUS CTE
COLLEGE OF THE SEQUOIAS
4999 E. BARDSLEY AVE.
TULARE, CA

DRAWING TITLE
FIRE PROTECTION - BUILDING F REFLECTED CEILING PLAN WEST

PROJECT NO.
19-12032

DRAWING
FP220

C:\Users\wacor\Box\Projects 2021\21-048 BFP - College of the Sequoias - CTE Building\21-048 BFP - College of the Sequoias - CTE Building2_Submittals\Drawings\12032-FP-COS Tulare CTE.rvt

PLOT DATE: 10/27/2022 10:53:53 PM

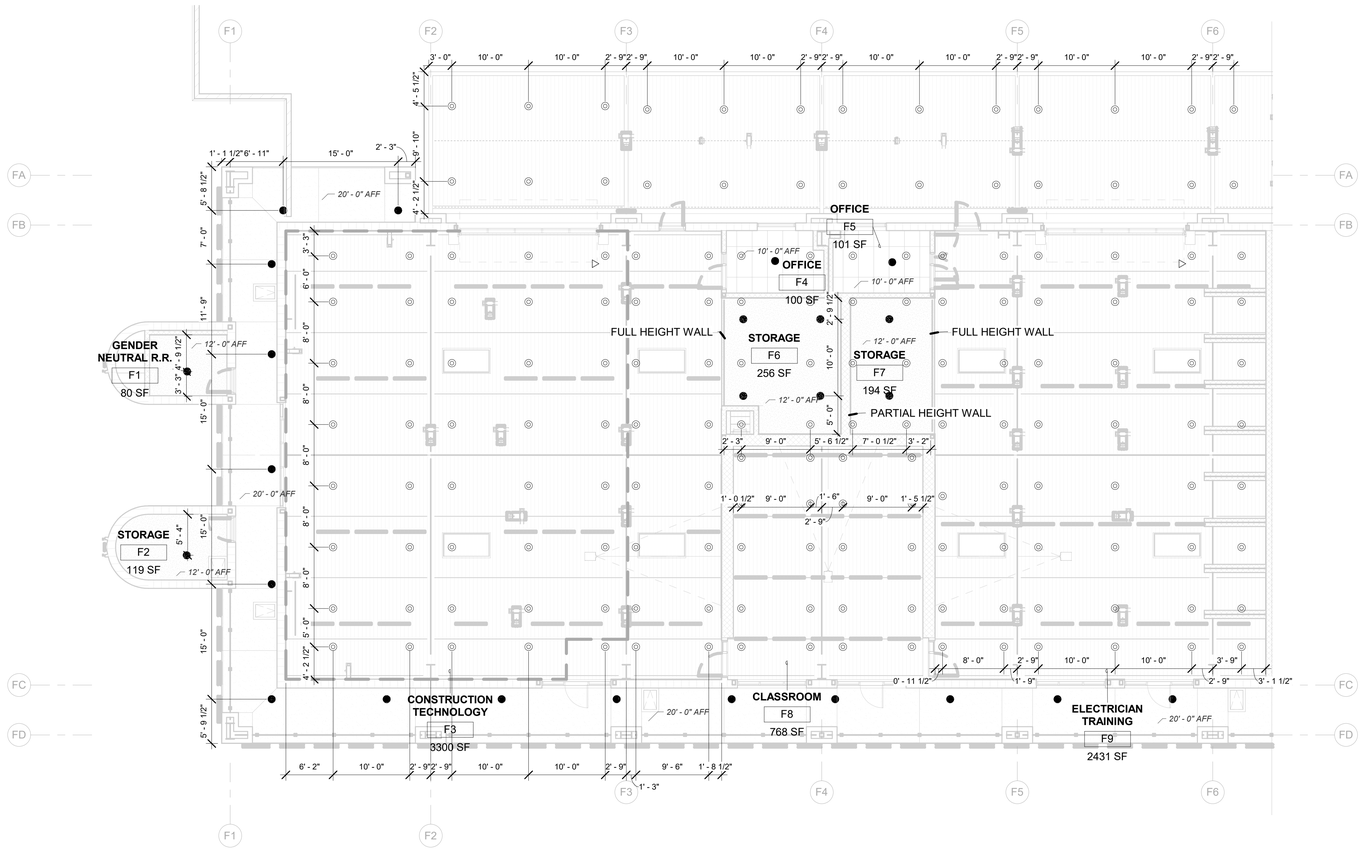

1 FIRE PROTECTION - BUILDING F WEST RCP

1/8" = 1'-0"

0' 4' 8' 16'

SPRINKLER SCHEDULE

Sprinkler Symbol	Count	Manufacturer	Model	Orifice Size	K-Factor	Temperature Rating	Sprinkler Orientation	Finish
○	166	VICTAULIC Inc.	V2704	1/2"	5.6	200 °F	UPRIGHT	Brass
◁	2	VICTAULIC Inc.	V2709	1/2"	5.6	200 °F	HORIZONTAL SIDEWALL	White
●	25	VICTAULIC	V3802	1/2"	5.6	155 °F	CONCEALED	White

Teter, LLP expressly reserves its common law copyright and other property rights in these plans. This document, the ideas and designs incorporated herein, as an instrument of professional service, is not to be used in whole or part, for any other project without prior written authorization.

FOR BID ONLY

MARK	DATE	DESCRIPTION
B	11/1/22	DSA BACKCHECK

TETER, LLP
FRESNO HEADQUARTERS
VISALIA | BAKERSFIELD | MODESTO | SAN LUIS OBISPO
ARCHITECTS ENGINEERS CONNECTED

TULARE CAMPUS CTE
COLLEGE OF THE SEQUOIAS
4999 E. BARDSLEY AVE.
TULARE, CA

DRAWING TITLE
FIRE PROTECTION - BUILDING F REFLECTED CEILING PLAN EAST

PROJECT NO.
19-12032

DRAWING
FP221

C:\Users\wacor\Box\Projects 2021\21-048 BFP - College of the Sequoias - CTE Building\21-048 BFP - College of the Sequoias - CTE Building\2_Submittals\Drawings\12032-FP-COS Tulare CTE.rvt
PLOT DATE: 10/27/2022 10:53:55 PM

C:\Users\wacor\Box\Projects 2021\21-048 BFP - College of the Sequoias - CTE Building\21-048 BFP - College of the Sequoias - CTE Building2_Submittals\Drawings\12032-FP-COS Tulare CTE.rvt

DESIGN NOTES:
- ALL PENDENT SPRINKLERS ARE INSTALLED USING VICFLEX FLEX DROPS
- FLEXDROPS HAVE BEEN DESIGNED AND CALCULATED AS 31" FLEX DROPS (TYPICAL THROUGHOUT)
- UPRIGHTS SHALL BE INSTALLED A MAXIMUM OF 1'-0 BELOW THE FINISHED ROOF DECK
- UPRIGHT SPRINKLERS DO NOT HAVE TO BE ALIGNED TO ROOF PITCH IN ACCORDANCE WITH NFPA 13 2016 EDITION 8.6.4.2.1

NFPA 13 2016 EDITION 8.6.4.2
8.6.4.2.1 UNLESS THE REQUIREMENTS OF 8.6.4.2.2 OR 8.6.4.2.3 ARE MET, DEFLECTORS OF SPRINKLERS SHALL BE ALIGNED PARALLEL TO CEILINGS, ROOFS, HIPS, OR THE INCLINE OF STAIRS.
8.6.4.2.3 ROOFS HAVING A PITCH NOT EXCEEDING 2 IN 12(16.7 PERCENT) ARE CONSIDERED HORIZONTAL IN THE APPLICATION OF 8.6.4.2, AND SPRINKLERS SHALL BE PERMITTED TO BE INSTALLED WITHDEFLECTORS HORIZONTAL.

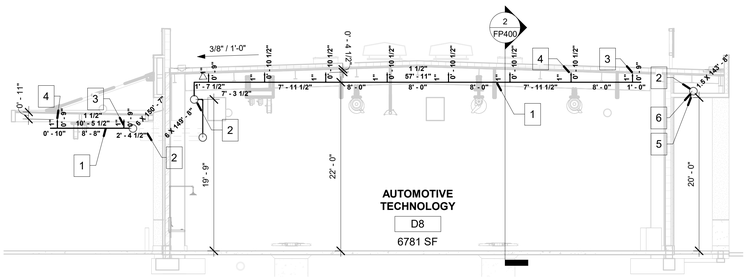

1 BUILDING D NORTH SECTION SOUTH
1/8" = 1'-0"

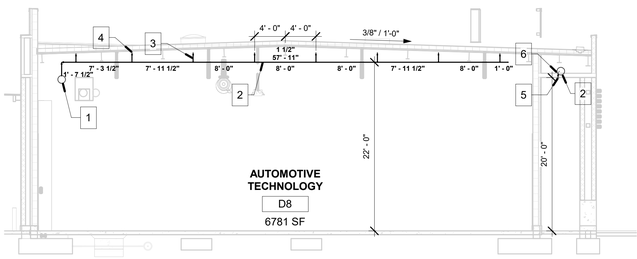

3 BUILDING D SOUTH GRIDLINE DF SOUTH SECTION
1/8" = 1'-0"

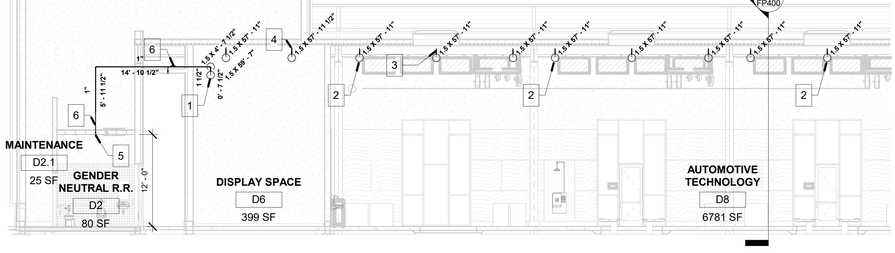

2 BUILDING D NORTH SECTION WEST
1/8" = 1'-0"

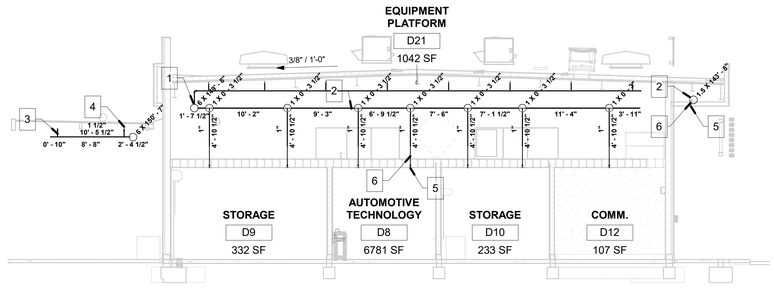

4 BUILDING D SOUTH GRIDLINE DG SOUTH SECTION
1/8" = 1'-0"

KEY NOTES
1. CROSS MAIN (TYPICAL)
2. BRANCHLINE (TYPICAL)
3. SPRIG (TYPICAL)
4. UPRIGHT SPRINKLER (TYPICAL)
5. CONCEALED PENDENT SPRINKLER (TYPICAL)
6. 31" VIC FLEX FLEX DROP (TYPICAL)
7. SYSTEM RISER

PLOT DATE: 10/27/2022 10:54:22 PM

FOR BID ONLY

Teter, LLP expressly reserves its common law copyright and other property rights in these plans. This document, the ideas and designs incorporated herein, as an instrument of professional service, is not to be used in whole or in part, for any other project without prior written authorization.

MARK	DATE	DESCRIPTION
B	11/1/22	DSA BACKCHECK

TETER, LLP
FRESNO HEADQUARTERS
VISALIA | BAKERSFIELD | MODESTO | SAN LUIS OBISPO
ARCHITECTS ENGINEERS CONNECTED

TULARE CAMPUS CTE
COLLEGE OF THE SEQUOIAS
4999 E. BARDSLEY AVE.
TULARE, CA

DRAWING TITLE
FIRE PROTECTION - BUILDING D SECTIONS

PROJECT NO.
19-12032

DRAWING
FP400

C:\Users\wacor\Box\Projects 2021\21-048 BFP - College of the Sequoias - CTE Building\21-048 BFP - College of the Sequoias - CTE Building2_Submittals\Drawings\12032-FP-COS Tulare CTE.rvt

DESIGN NOTES:
- ALL PENDENT SPRINKLERS ARE INSTALLED USING VICFLEX FLEX DROPS
- FLEXDROPS HAVE BEEN DESIGNED AND CALCULATED AS 31" FLEX DROPS (TYPICAL THROUGHOUT)
- UPRIGHTS SHALL BE INSTALLED A MAXIMUM OF 1'-0 BELOW THE FINISHED ROOF DECK
- UPRIGHT SPRINKLERS DO NOT HAVE TO BE ALIGNED TO ROOF PITCH IN ACCORDANCE WITH NFPA 13 2016 EDITION 8.6.4.2.1

NFPA 13 2016 EDITION 8.6.4.2
8.6.4.2.1 UNLESS THE REQUIREMENTS OF 8.6.4.2.2 OR 8.6.4.2.3 ARE MET, DEFLECTORS OF SPRINKLERS SHALL BE ALIGNED PARALLEL TO CEILINGS, ROOFS, HIPS, OR THE INCLINE OF STAIRS.
8.6.4.2.3 ROOFS HAVING A PITCH NOT EXCEEDING 2 IN 12(16.7 PERCENT) ARE CONSIDERED HORIZONTAL IN THE APPLICATION OF 8.6.4.2, AND SPRINKLERS SHALL BE PERMITTED TO BE INSTALLED WITHDEFLECTORS HORIZONTAL.

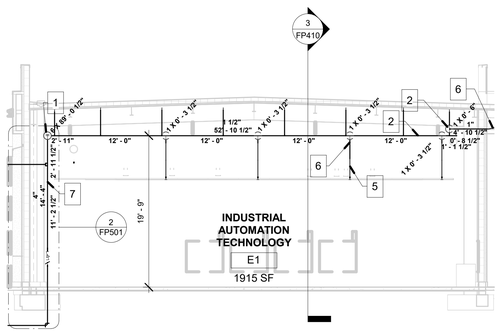

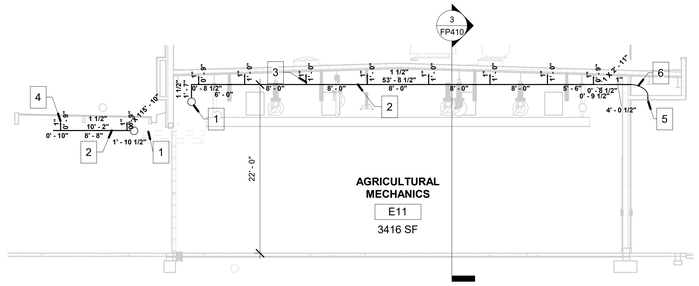

1 BUILDING E GRIDLINE EB SOUTH SECTION
1/8" = 1'-0"

2 BUILDING E GRIDLINE EF SOUTH SECTION
1/8" = 1'-0"

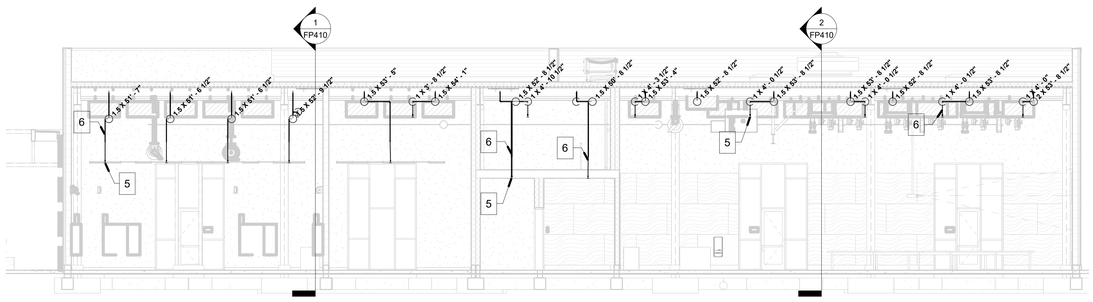

3 BUILDING E SECTION EAST
1/8" = 1'-0"

KEY NOTES
1. CROSS MAIN (TYPICAL)
2. BRANCHLINE (TYPICAL)
3. SPRIG (TYPICAL)
4. UPRIGHT SPRINKLER (TYPICAL)
5. CONCEALED PENDENT SPRINKLER (TYPICAL)
6. 31" VIC FLEX FLEX DROP (TYPICAL)
7. SYSTEM RISER

PLOT DATE: 10/27/2022 10:54:24 PM

FOR BID ONLY

Teter, LLP expressly reserves its common law copyright and other property rights in these plans. This document, the ideas and designs incorporated herein, as an instrument of professional service, is not to be used in whole or in part, for any other project without prior written authorization.

MARK	DATE	DESCRIPTION
B	11/1/22	DSA BACKCHECK

TETER, LLP
ARCHITECTS ENGINEERS CONNECTED
FRESNO HEADQUARTERS
VISALIA | BAKERSFIELD | MODESTO | SAN LUIS OBISPO

TULARE CAMPUS CTE
COLLEGE OF THE SEQUOIAS
4999 E. BARDSLEY AVE.
TULARE, CA

DRAWING TITLE
FIRE PROTECTION - BUILDING E SECTIONS

PROJECT NO.
19-12032

DRAWING
FP410

C:\Users\wacor\Box\Projects 2021\21-048 BFP - College of the Sequoias - CTE Building\21-048 BFP - College of the Sequoias - CTE Building\2_Submittals\Drawings\12032-FP-COS Tulare CTE.rvt

DESIGN NOTES:
- ALL PENDENT SPRINKLERS ARE INSTALLED USING VICFLEX FLEX DROPS
- FLEXDROPS HAVE BEEN DESIGNED AND CALCULATED AS 31" FLEX DROPS (TYPICAL THROUGHOUT)
- UPRIGHTS SHALL BE INSTALLED A MAXIMUM OF 1'-0 BELOW THE FINISHED ROOF DECK
- UPRIGHT SPRINKLERS DO NOT HAVE TO BE ALIGNED TO ROOF PITCH IN ACCORDANCE WITH NFPA 13 2016 EDITION 8.6.4.2.1

NFPA 13 2016 EDITION 8.6.4.2
8.6.4.2.1 UNLESS THE REQUIREMENTS OF 8.6.4.2.2 OR 8.6.4.2.3 ARE MET, DEFLECTORS OF SPRINKLERS SHALL BE ALIGNED PARALLEL TO CEILINGS, ROOFS, HIPS, OR THE INCLINE OF STAIRS.
8.6.4.2.3 ROOFS HAVING A PITCH NOT EXCEEDING 2 IN 12(16.7 PERCENT) ARE CONSIDERED HORIZONTAL IN THE APPLICATION OF 8.6.4.2, AND SPRINKLERS SHALL BE PERMITTED TO BE INSTALLED WITHDEFLECTORS HORIZONTAL.

KEY NOTES
1. CROSS MAIN (TYPICAL)
2. BRANCHLINE (TYPICAL)
3. SPRIG (TYPICAL)
4. UPRIGHT SPRINKLER (TYPICAL)
5. CONCEALED PENDENT SPRINKLER (TYPICAL)
6. 31" VIC FLEX FLEX DROP (TYPICAL)
7. SYSTEM RISER

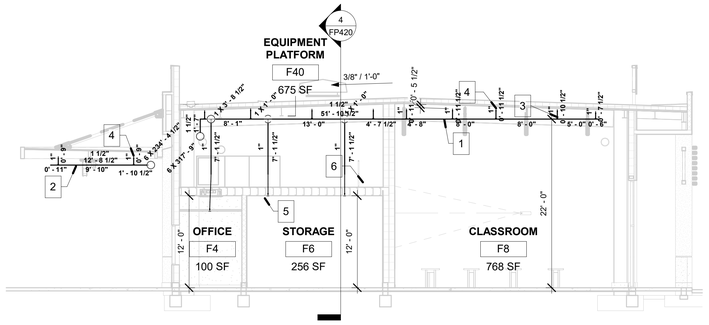

1 BUILDING F GRIDLINE F4 WEST SECTION
1/8" = 1'-0"

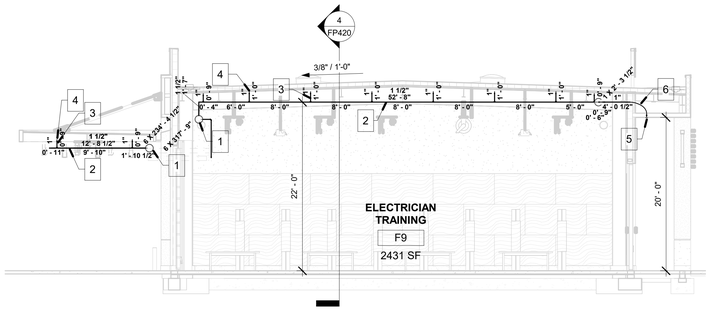

2 BUILDING F GRIDLINE F6 WEST SECTION
1/8" = 1'-0"

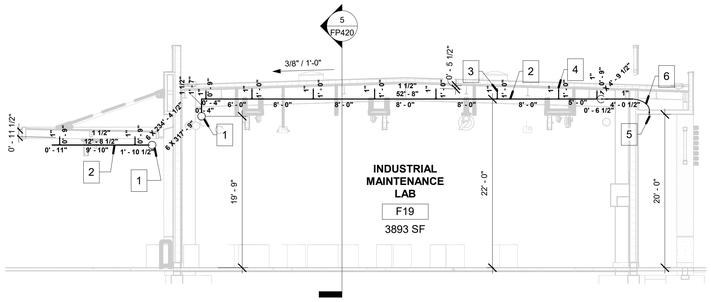

3 BUILDING F GRIDLINE F10 WEST SECTION
1/8" = 1'-0"

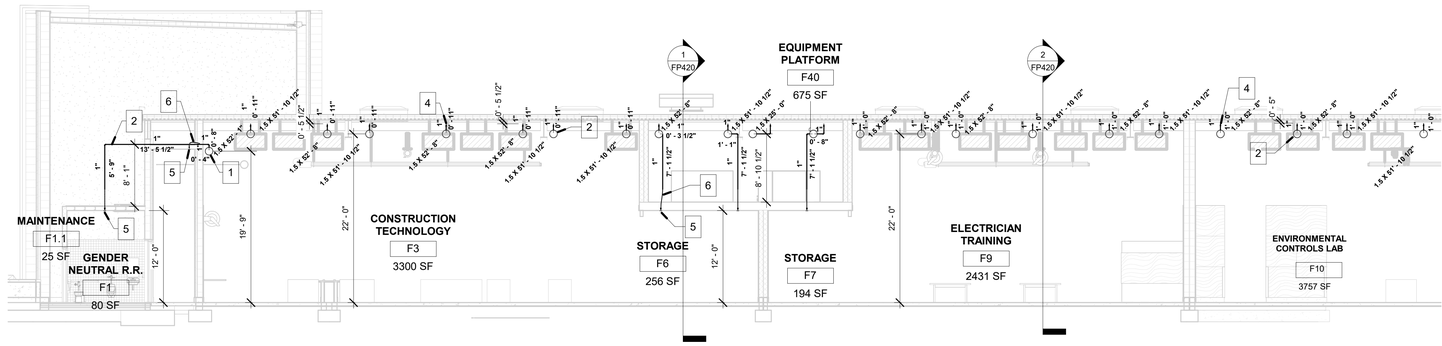

4 BUILDING F SOUTH SECTION WEST
1/8" = 1'-0"

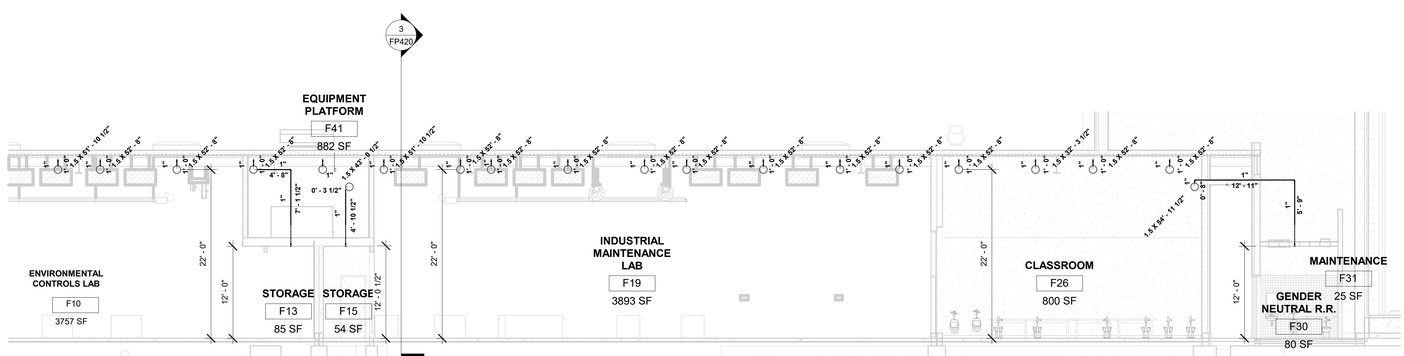

5 BUILDING F SOUTH SECTION EAST
1/8" = 1'-0"

PLOT DATE: 10/27/2022 10:54:28 PM

FOR BID ONLY

Teter, LLP expressly reserves its common law copyright and other property rights in these plans. This document, the ideas and designs incorporated herein, as an instrument of professional service, is not to be used in whole or part, for any other project without prior written authorization.

MARK	DATE	DESCRIPTION
B	11/1/22	DSA BACKCHECK

TETER, LLP
ARCHITECTS ENGINEERS CONNECTED
FRESNO HEADQUARTERS
VISALIA | BAKERSFIELD | MODESTO | SAN LUIS OBISPO

TULARE CAMPUS CTE
COLLEGE OF THE SEQUOIAS
4999 E. BARDSLEY AVE.
TULARE, CA

DRAWING TITLE
FIRE PROTECTION - BUILDING F SECTIONS

PROJECT NO.
19-12032

DRAWING
FP420

C:\Users\wacor\Box\Projects 2021\21-048 BFP - College of the Sequoias - CTE Building\21-048 BFP - College of the Sequoias - CTE Building_central_2_solo.rvt
PLOT DATE: 10/27/2022 10:54:34 PM

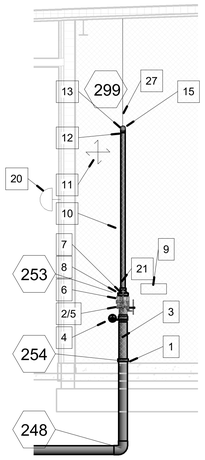

1 BUILDING D RISER DETAIL
1/4" = 1'-0"

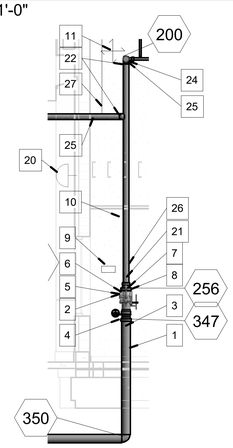

2 BUILDING E RISER DETAIL
1/4" = 1'-0"

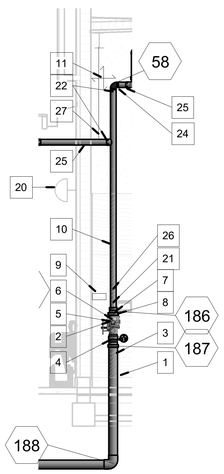

3 BUILDING F RISER DETAIL
1/4" = 1'-0"

1. POINT OF CONNECTION 1'-0 AFF - 6" FLEXIBLE COUPLING
2. 2" MAIN DRAIN PIPING - THREADED BLACK STEEL SCHEDULE 40
3. 6" RISER PIPING - GROOVED BLACK STEEL SCHEDULE 10
4. VICTAULIC 705W SUPERVISED CONTROL VALVE - GROOVED
5. 2" TEST AND DRAIN
6. VICTAULIC UMC UNIVERSAL MANIFOLD RISER
7. 6" x 3" BLDG D, 6" x 4" BLDGS E&F GROOVED CONCENTRIC REDUCER
8. 6" GROOVED FLEXIBLE COUPLING
9. SPARE SPRINKLER BOX - MOUNTED ON EXTERIOR WALL OF EACH RISER ROOM - SHALL CONTAIN (6) SPARE SPRINKLERS (3) OF EACH TYPE AND COMPATIBLE WRENCHES
10. 3" RISER TO SYSTEM BLDG D 4" RISER TO SYSTEM BLDGS E & F - GROOVED BLACK STEEL SCHEDULE 10
11. 4-WAY SWAY BRACE - ATTACHED TO WALL STRUCTURE - REFER TO 4-WAY SWAY BRACE DETAIL
12. 3" GROOVED FLEXIBLE COUPLING
13. 3" GROOVED TEE
14. 3" GROOVED RIGID COUPLING
15. 3" CROSS MAIN TO SYSTEM
16. 0-300 PSI GAUGE - 1/4" NPS
17. 1/4" NPS GAUGE ISOLATION VALVE
18. 3" VANE TYPE WATERFLOW SWITCH
19. 2" MAIN DRAIN DISCHARGE TO EXTERIOR - TO TERMINATE VIA 1/2" OUTLET AND 1/2" SMOOTH TEST OUTLET (BROKEN SPRINKLER)(NOT GRAPHICALLY SHOWN FOR CLARITY)
20. 24V ELECTRIC WATERFLOW BELL TO BE INSTALLED ON EXTERIOR WALL
21. HYDRAULIC PLACARD AND GENERAL INFORMATION SIGN PER NFPA 13 25.5 & 25.6
22. 4" GROOVED FLEXIBLE COUPLING
23. 4" GROOVED RIGID COUPLING
24. 4" GROOVED 90° ELBOW BLDG F AND TEE BLDG E
25. 4" CROSS MAIN TO SYSTEM
26. 4" VANE TYPE WATERFLOW SWITCH
27. HANGER WITHING 24" OF RISER

4 SYSTEM RISER KEY NOTES
N.T.S.

- **WET SYSTEM RISERS SHALL BE A 6" VICTAULIC UMC RISER CONTROL ASSEMBLY WITH 705W SUPERVISED CONTROL VALVE.**
- **FDC IS A REMOTE FREE STANDING FDC. REFER TO CIVIL PLANS FOR INSTALLATION LOCATION.**
- **SUPERVISED CONTROL VALVES AND VANE STYLE WATERFLOW SWITCH SHALL ALL BE SUPERVISED BY THE BASE BUILDING FIRE ALARM SYSTEM**
- **A 24V ALARM BELL SHALL BE INSTALLED ON THE EXTERIOR WALL OF THE RISER LOCATION**
- **SYSTEM INSPECTOR'S TEST AND DRAIN IS ATTACHED TO THE RISER AND SHALL BE PIPED TO THE EXTERIOR OF THE BUILDING VIA A 2" MAIN DRAIN. THIS SHALL TERMINATE OVER A SPLASH BLOCK WITH A 1/2" OUTLET COMPLETED WITH A 1/2" SMOOTH OUTLET (BROKEN SPRINKLER).**

5 RISER NOTES

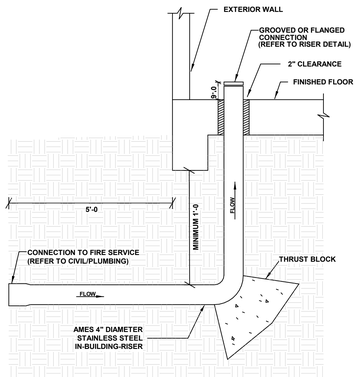

6 AMES STAINLESS STEEL IN-BUILDING RISER
N.T.S

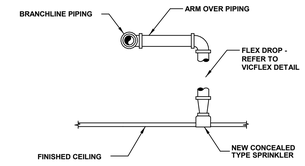

ALL PENDENT AND CONCEALED PENDENTS ON PROJECT SHALL BE INSTALLED USING 31" VIC FLEX FLEXIBLE SPRINKLER DROPS.

TYPICAL PENDANT SPRINKLER HEAD INSTALLATION DETAIL
N.T.S.

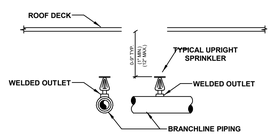

NOTE:
NFPA 13 2016 EDITION 8.6.4.2
8.6.4.2.1 UNLESS THE REQUIREMENTS OF 8.6.4.2.2 OR 8.6.4.2.3 ARE MET, DEFLECTORS OF SPRINKLERS SHALL BE ALIGNED PARALLEL TO CEILINGS, ROOFS, HIPS, OR THE INCLINE OF STAIRS.
8.6.4.2.2 WHERE SPRINKLERS ARE INSTALLED IN THE PEAK BELOW ASLOPED CEILING OR ROOF SURFACE, THE SPRINKLER SHALL BE INSTALLEDWITH THE DEFLECTOR HORIZONTAL.
8.6.4.2.3 ROOFS HAVING A PITCH NOT EXCEEDING 2 IN 12(16.7 PERCENT) ARE CONSIDERED HORIZONTAL IN THE APPLICATION OF 8.6.4.2, AND SPRINKLERS SHALL BE PERMITTED TO BE INSTALLED WITHDEFLECTORS HORIZONTAL.

UPRIGHT SPRINKLER ON BRANCHLINE DETAIL
N.T.S.

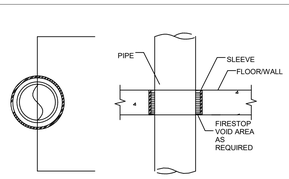

SLEEVE REQUIREMENTS PER
NFPA 13 2016ed

9.3.4.3 WHERE CLEARANCE IS PROVIDED BY A PIPE SLEEVE, A NOMINAL DIAMETER 2 IN. (50
MM) LARGER THAN THE NOMINAL DIAMETER OF THE PIPE SHALL BE ACCEPTABLE FOR PIPE
SIZES 1 IN. (25 MM) THROUGH 3½ IN. (90 MM), AND THE CLEARANCE PROVIDED BY A PIPE SLEEVE OF NOMINAL DIAMETER 4 IN. (100 MM) LARGER THAN THE NOMINAL DIAMETER OF THE PIPE SHALL BE ACCEPTABLE FOR PIPE SIZES 4 IN. (100 MM) AND LARGER.
9.3.4.5 NO CLEARANCE SHALL BE REQUIRED IF FLEXIBLE COUPLINGS ARE LOCATED WITHIN
1 FT (300 MM) OF EACH SIDE OF A WALL OR IF THE REQUIREMENTS OF 9.3.2.3.1(2) ARE MET.

TYPICAL SLEEVE PENETRATION INSTALLATION DETAIL AND REQUIREMENTS
N.T.S.

Install a ball valve in line with the PAV to assist in servicing the strainer without disabling the sprinkler system.

1. Read and understand the instructions provided before you proceed with installation. The PAV shall be installed in accordance with local ordinances and the applicable NFPA13 standard.

2. The Engineer of Record should select the Model PAV, Potter Air Vent installation location. Usually at a point in the system that will vent the most air. Refer to piping plans for location.

3. The location of the PAV must not interfere with the spray pattern of any sprinkler head. The connection point must be off the top of the pipe. (See Fig. 1)

4. The piping must be level or pitch back toward the fire sprinkler system piping and arranged in such a manner that water will not become trapped. The outlet of the PAV contains a 1/2" male NPT threaded connection allowing the device to be piped to a drain or other suitable location if there are concerns about inadvertent water discharge.

5. Immediately after installation and filling of the fire sprinkler system, the PAV should be inspected for leaks and proper operation. The unit should be inspected periodically. Thereafter the manufacturer recommends quarterly or more frequently.

6. Inspection should include removal and cleaning of the strainer screen. Remove the screen and flush with clean water. Use a wire brush if necessary to remove any particles trapped in the screen.

PAV and Shutoff Valve Replacement

The vent used in the PAV is not field replaceable. If the vent should fail, the entire unit must be replaced.

PAV Outline Drawing

Fig 1

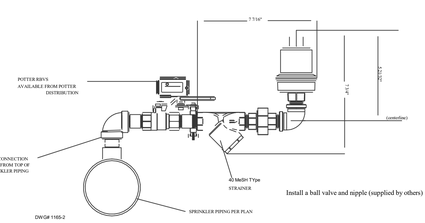

AIR VENT DETAIL
N.T.S.

Potter Electric Signal Company, LLC • St. Louis, MO • Phone: 800-325-3936 • www.pottersignal.com

5401165 - REV E • 2/19

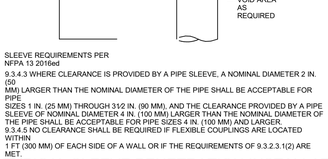

AFCON FIG 700 / 775 ATTACHMENT TO STEEL BEAM FLANGE
N.T.S.

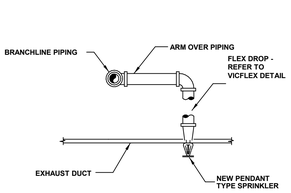

A RELOCATION LABLE OF FLEXIBLE HOSE DROPS SHALL BE PROVIDED ON THE ANCHORING COMPONENT IN A SUSPENDED CEILING

VICTAULIC VIC-FLEX FLEXIBLE SPRINKLER DROP (31" TYPICAL THROUGHOUT)

OUTLET HOSE CLEARANCE CHART						
DIMENSIONS		INCHES	INCHES	INCHES	INCHES	INCHES
R	MINIMUM BEND RADIUS	3	4	5	6	7
A	MINIMUM	9.4	10.4	11.4	12.4	13.4

SPRINKLER HOSE CLEARANCE CHART							
DIMENSIONS		INCHES	INCHES	INCHES	INCHES	INCHES	INCHES
R	MINIMUM BEND RADIUS	2	3	4	5	6	7
A	MINIMUM	10.1	11.1	12.1	13.1	14.1	15.1

ALL PENDENT AND CONCEALED PENDENTS ON PROJECT SHALL BE INSTALLED USING 31" VIC FLEX FLEXIBLE SPRINKLER DROPS.
MAX BENDS - 3
EQUIVALENT LENGTH = 52'-0

VIC-FLEX FLEX HEAD DETAIL
N.T.S.

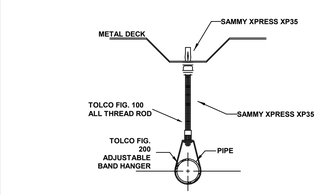

NOTE: DETAIL SHOWN IS FOR 1" ARM OVERS ONLY. FOR ALL OTHER PIPE SIZES SEE DETAIL BELOW

****MAXIMUM SUSPENDED LOAD BASED ON STRUCTURAL REQUIREMENTS IS 30LBS.****

SYMBOL ON PLANS

SAMMY X-PRESS XP35 - 1-1/2" AND GREATER
N.T.S.

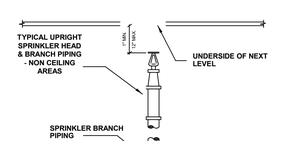

NOTE:
NFPA 13 2016 EDITION 8.6.4.2
8.6.4.2.1 UNLESS THE REQUIREMENTS OF 8.6.4.2.2 OR 8.6.4.2.3 ARE MET, DEFLECTORS OF SPRINKLERS SHALL BE ALIGNED PARALLEL TO CEILINGS, ROOFS, HIPS, OR THE INCLINE OF STAIRS.
8.6.4.2.2 WHERE SPRINKLERS ARE INSTALLED IN THE PEAK BELOW ASLOPED CEILING OR ROOF SURFACE, THE SPRINKLER SHALL BE INSTALLEDWITH THE DEFLECTOR HORIZONTAL.
8.6.4.2.3 ROOFS HAVING A PITCH NOT EXCEEDING 2 IN 12(16.7 PERCENT) ARE CONSIDERED HORIZONTAL IN THE APPLICATION OF 8.6.4.2, AND SPRINKLERS SHALL BE PERMITTED TO BE INSTALLED WITHDEFLECTORS HORIZONTAL.

TYPICAL UPRIGHT SPRINKLER INSTALLATION DETAIL
N.T.S.

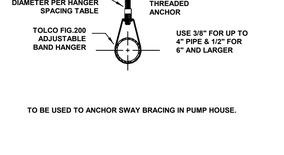

AFCON FIG 700 / 775 ATTACHMENT TO STEEL BAR JOIST
N.T.S.

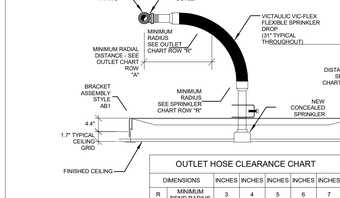

**** WHERE HANGERS OR BRACING ANCHORS/CLAMPS ARE INSTALLED ON THE BOTTOM FLANGE OF A BEAM, BOTTOM FLANGE BRACING ON ONE SIDE OF THE CLAMP MUST BE INSTALLED. ****

TOLCO FIG 200 HAS THE LOWEST MAX LOAD IN LBS. OF ALL HANGER COMPONENTS. THE TABLE BELOW REFLECTS THE MAXIMUM WEIGHT IN LBS. FOR THESE HANGERS.

1"	400
1-1/2"	400
2"	400
4"	1000

REVERSIBLE BEAM C-CLAMP WITH RETAINING STRAP (BEAM)
N.T.S.

SYMBOL FOR BEAM CLAMP IS CONSISTANT THROUGHOUT. REFER TO "TOP BEAM C-CLAMP" DETAIL.

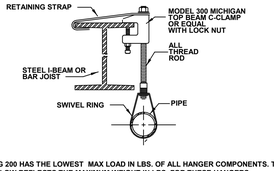

TOLCO FIG 200 HAS THE LOWEST MAX LOAD IN LBS. OF ALL HANGER COMPONENTS. THE TABLE BELOW REFLECTS THE MAXIMUM WEIGHT IN LBS. FOR THESE HANGERS.

1"	400
1-1/2"	400
2"	400
4"	1000

TOP BEAM C-CLAMP WITH RETAINING STRAP (BEAM)
N.T.S.

SYMBOL ON PLANS

TO BE USED TO ANCHOR SWAY BRACING IN PUMP HOUSE.

DRILLED SHALLOW CONCRETE ANCHOR
N.T.S.

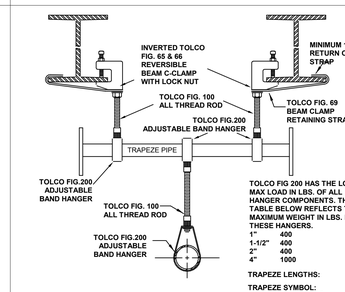

TOLCO FIG 200 HAS THE LOWEST MAX LOAD IN LBS. OF ALL HANGER COMPONENTS. THE TABLE BELOW REFLECTS THE MAXIMUM WEIGHT IN LBS. FOR THESE HANGERS.

1"	400
1-1/2"	400
2"	400
4"	1000

TRAPEZE LENGTHS:

TRAPEZE SYMBOL::
- **4" SCH 10 AT 6'-0**
- **MODULUS = 0.51**
- **MINIMUM TRAPEZE PIPE IS 2" SCH 40**

REVERSIBLE BEAM C-CLAMP WITH PIPE TRAPEZE HANGER
N.T.S.

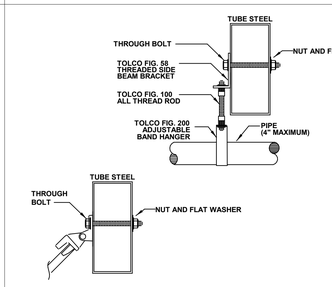

HSS HANGING AND BRACING ATTACHMENT TO STEEL
N.T.S.

TABLE 9.2.2.1(a) MAXIMUM DISTANCE BETWEEN HANGERS (FT-IN.)

NOMINAL PIPE SIZE	3/4"	1"	1-1/4"	1-1/2"	2"	2-1/2"	3"	4"	6"	8"
STEEL PIPE	N/A	12-0	12-0	15-0	15-0	15-0	15-0	15-0	15-0	15-0
THREADED LIGHTWALL	N/A	12-0	12-0	12-0	12-0	12-0	12-0	N/A	N/A	N/A
COPPER TUBE	8-0	8-0	10-0	12-0	12-0	12-0	12-0	N/A	N/A	N/A
CPVC	5-6	6-0	6-6	7-0	8-0	9-0	N/A	N/A	N/A	N/A

FIGURE A.9.2.3.2.2 DISTANCE FROM SPRINKLER TO HANGER

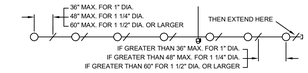

TABLE 9.1.2.1 HANGER ROD SIZE

PIPE SIZE	DIAMETER OF ROD	PIPE SIZE	DIAMETER OF ROD
UP TO AND INCLUDING 4"	3/8"	6" AND 8"	1/2"

NFPA HANGER SPACING TABLE
N.T.S.

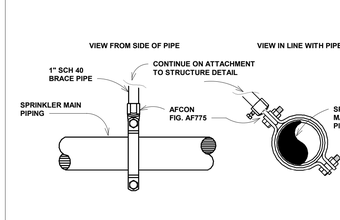

AFCON FIG 700 / 775 4-WAY SWAY BRACE ATTACHMENT
N.T.S.

LATERAL SWAY BRACE ATTACHMENT
N.T.S.

SYMBOL ON PLANS

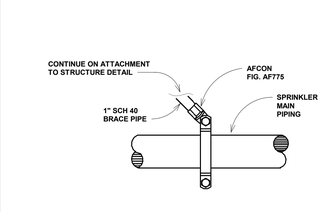

LONGITUDINAL SWAY BRACE ATTACHMENT
N.T.S.

SYMBOL ON PLANS

FOR BID ONLY

Teter, LLP expressly reserves its common law copyright and other property rights in these plans. This document, the ideas and designs incorporated herein, as an instrument of professional service, is not to be used in whole or in part, for any other project without prior written authorization.

MARK	DATE	DESCRIPTION
B	11/1/22	DSA BACKCHECK

TETER, LLP
FRESNO HEADQUARTERS
VISALIA | BAKERSFIELD | MODESTO | SAN LUIS OBISPO
ARCHITECTS ENGINEERS CONNECTED

TULARE CAMPUS CTE
COLLEGE OF THE SEQUOIAS
4999 E. BARDSLEY AVE.
TULARE, CA

DRAWING TITLE
FIRE PROTECTION - DETAILS

PROJECT NO.
19-12032

DRAWING
FP501

STRUCTURECAST

8261 Mc CUTCHEN ROAD BAKERSFIELD, CA 93311

PROJECT NO: 22-105160

FIRE PUMP HOUSE

TULARE CAMPUS CTE

COLLEGE OF THE SEQUOIAS

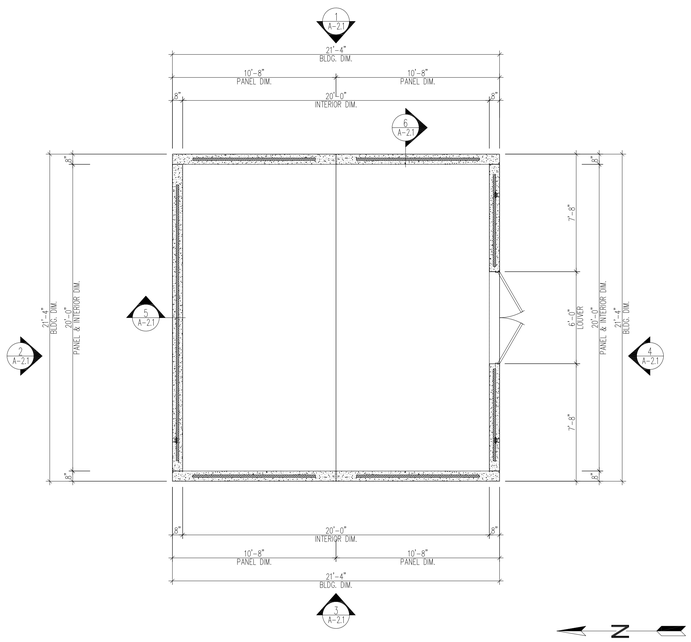

KEY PLAN

N

ARCHITECT:	Teter Architects – Engineers
ENGINEER:	Teter Architects – Engineers
CONTRACTOR:	–

One Hour Fire Rated Construction Justification.

Exrerior Wall Panels:

8" thick Precast Concrete Wall Panels comprised of 2" of Foam Plastic Insulation sandwiched between layers of 3" thick Siliceous Aggregate Concrete.

Wall Assembly complies wiyh CBC Section 722.1.2 for calculated Fire Resistance of Precast Multi-Wythe Walls.

Equation 7-4: $R = (Rn^{0.59} + Rn^{0.59} + \ldots + Rn^{0.59})^{1.7}$

Concrete, Each Wythe: $Rn^{0.59} = 9.5$ (CBC Table 722.2.1.2(1))

Insulation: $Rn^{0.59} = 2.5$ (Foam Plastic Insulation Value per CBC 722.2.1.2.2)

$R = (9.5 + 2.5 + 9.5)^{1.7} = 184$ Minutes > 3 hrs.

Roof/Ceiling Assembly:

Precast Concrete Panels, 11 1/4" Minimum / 1'-7" Maximum Thickness comprised of 3" of Foam Plastic Insulation Sandwiched between a bottom layer of 6" thick concrete and a sloping top layer of 2 1/2" Minimum / 10" Maximum thickness.

1-Hour Fire Resistance Rated Construction per CBC Table 721.1(3), Item 1-1.1 and/or 2-1.1, 3 1/2" concrete provides 1 Hour Rating.

DRAWING INDEX

REV. NO.	DRAWING NUMBER	DESCRIPTION	DRAWING SIZE	ISSUED FOR: APPROVAL	REVISION DATE	ISSUED FOR: FINAL APPROVAL	ISSUED FOR: CONSTRUCTION
0	A-0.0	COVER SHEET	30 x 42	11-01-22			
0	A-0.1	GENERAL NOTES	30 x 42	11-01-22			
0	A-1.1	FLOOR PLAN, ROOF PLAN & ARCHITECTURAL DETAILS	30 x 42	11-01-22			
0	A-2.1	EXTERIOR ELEVATIONS, BUILDING SECTIONS & ARCHITECTURAL DETAILS	30 x 42	11-01-22			
0	A-3.1	CONNECTION DETAILS "C-01" THRU "C-07"	24 x 36	11-01-22			
0	A-3.2	CONNECTION DETAILS "C-08" THRU "C-13"	24 x 36	11-01-22			
0	A-4.1	POST-TENSIONING INSTRUCTION	24 x 36	11-01-22			
0	A-5.1	SITE PREPARATION, BUILDING SHIPPING & HANDLING	24 x 36	11-01-22			
0							
0							
0							
0							
0							
0							
0							
0							

MATERIALS FOR PRECAST CONCRETE PROJECTS

- CONCRETE: Hard Rock 150 pcf; f'c= 5000 psi; f'ci= 2500 psi., typ. u.o.n.
- GROUT: Quikrete Non-Shrink Precision Grout f'c= 5,000 psi min. per ASTM C1107.
- WELDED WIRE FABRIC: ASTM A185, Fy= 65 ksi > W1.2, Fsu= 75 ksi.
- REINFORCING BARS (Non-weldable): A615-60, Fy= 60 ksi, Fu= 90 ksi
- REINFORCING BARS (Weldable): A706, Fy= 60 ksi, Fu= 80 ksi
- PRESTRESSING – 1/2"ø 270 ksi 7 Wire Low Relaxation Strands ASTM A416
  P Jack = 31 Kip Max.
  P Seat = 28.9 Kip
  P Eff = 23.55 Kip
- STEEL PLATE; FLAT BAR, STRUCTURAL SHAPES; ASTM A36 (Fsu= 58 ksi). BLACK IRON
- STEEL TUBES; ASTM A500 GRADE B (Fsu= 46 ksi). BLACK IRON
- MACHINE THREADED RODS ASTM A36. ELECTROPLATED PER ASTM B633, SC3
- NATIONAL COARSE THREAD BOLTS: ASTM A307. ZINC COATED PER ASTM A123
- COIL THREADED RODS ASTM A36 (Fy=36 ksi). ELECTROPLATED PER ASTM B633, SC3
- WELDS PER AWS D1.1 – PREQUALIFIED WELDING PROCESSES ONLY (SMAW; FCAW; GMAW OR SAW) WITH LOW HYDROGEN E70XX
- WELDING SPECIFICATIONS: Welding of Structural Steel AWS D1.1-98; E70XX; Welding of Reinforcing Bars AWS D1.4-98; E70XX; Welding of Sheet Steel AWS D1.3-98; E70XX
  ELECTRODES, PREHEAT ALL STEEL SECTIONS GREATER THAN 3/4" THICK.
- HEADED WELDING STUDS ASTM A496 OR ASTM A108 (Fy= 54 ksi, Fsu= 60 ksi, AWS D1.1, CHAPTER 4, PART F).
- DEFORMED BAR ANCHORS ASTM A496 (Fy= 70 ksi, Fsu= 80 ksi USE 1/2"; 5/8" OR 3/4" SIZES).
- CONCRETE INSERTS (COIL OR FERRULE LOOP): DAYTON-SUPERIOR. ELECTROPLATED PER ASTM B633
- HANDLING INSERTS: BURKE RAPID-LIFT OR DAYTON-RICHMOND. ELECTROPLATED PER ASTM B633
- ERECTION INSERTS: BURKE ERECTION ANCHORS, DAYTON-SUPERIOR B-18 OR B-33 COIL LOOP INSERTS. ELECTROPLATED PER ASTM B633
- LIFT LOOPS FOR HANDLING: 3/8"ø.– 7x19 OR 5/8"ø – 6x19 GALVANIZED AIRCRAFT CABLE LOOPS.
- COIL SLOTTED INSERTS: HALFEN COIL THREAD ANCHOR CHANNELS. GALVANIZED G165
- FIELD INSTALLED EXPANSION ANCHORS POWERS POWER-STUD+SD2 (ESR-2502) OR EQUAL

Specified concrete cover for precast-nonprestressed or prestressed concrete members manufactured under plant conditions

Concrete exposure	Member	Reinforcement	Specified cover, in.
Exposed to weather or in contact with ground	Walls	No. 14 and No. 18 bars; tendons larger than 1-1/2 in diameter	1-1/2
		No. 11 bars and smaller; W31 and D31 wire and smaller; tendons and strands 1-1/2 in diameter and smaller	3/4
	All other	No. 14 and No. 18 bars; tendons larger than 1-1/2 in diameter	2
		No. 6 through No. 11 bars; tendons and strands larger than 5/8 in. diameter through 1-1/2 in diameter	1-1/2
		No. 5 bar, W31 or D31 wire, and smaller; tendons and strands 5/8 in. diameter and smaller	1-1/4
Not exposed to weather or in contact with ground	Slabs, joists, and walls	No. 14 and No. 18 bars; tendons larger than 1-1/2 in diameter	1-1/4
		Tendons and strands 1-1/2 in. diameter and smaller	3/4
		No. 11 bar, W31 or D31 wire, and smaller	5/8
	Beams, columns, pedestals, and tension ties	Primary reinforcement	Greater of db and 5/8 and need not exceed 1-1/2
		Stirrups, ties, spirals, and hoops	3/8

LOAD DESIGN CRITERIA:

The Structural Design is prepared in Compliance with CBC 2019 & IBC 2018 & ASCE 7-16

A. Floor:
   Live Load: 100 psf
   Dead Load: 100 psf
B. Roof:
   Live Load: 20 psf
   Snow Load: 0 psf
C. Wind Load:
   Risk Category IV
   Wind Speed: 104 mph
   Exposure C
   Internal Pressure Coefficient +/-0.18
D. Seismic:
   a. Risk Category IV
      Importance Factor 1.5
   b. Site Classification D
   c. Seismic Design Category D
   d. Mapped Spectral Response Accelerations:
      Ss=0.582g S1=0.227g
   e. Design Spectral Response Accelerations:
      SDs=0.518g SD1=0.325g
   f. Response Modification Factor, R=4
   g. Seismic Force Resisting System(s): Intermediate Precast Shear Walls
   h. System Overstregth Factor, Ω=2.5
   i. Deflection Amp. Factor, Cd=4.0
   j. Analysis Procedure Used: Equivalent Lateral Force Method

TABLE 1705.3
REQUIRED SPECIAL INSPECTIONS AND TESTS OF CONCRETE CONSTRUCTION

TYPE	APPLICATION TO THIS PROJECT	CONTINUOUS SPECIAL INSPECTION	PERIODIC SPECIAL INSPECTION	REFERENCED STANDARD	CBC REFERENCE
1. Inspect and test reinforcement, including prestressing tendons, and verify placement.	SEE BELOW	–	X	ACI 318, Ch. 20, 25.5, 25.3, 26.6.1-26.6.3	1908A.3, 1908A.4, 1910A.2, 1910A.3; (DSA-SS/CC) 1909.2.4, 1909.2.5
2. Reinforcing bar welding: a. Verify weldability of reinforcing bars other than ASTM A706; b. Inspect single-pass fillet welds, maximum 5/16"; and c. Inspect all other welds	SEE BELOW	– – X	X X –	AWS D1.4, ACI 318: 26.6.4	1705A.3.1, 1903A.8
3. Inspect anchors cast in concrete	N/A	–	X	ACI 318, 17.8.2	–
4. Inspect and test anchors post-installed in hardened concrete members. a. Adhesive anchors installed in horizontally or upwardly inclined orientations to resist sustained tension loads. b. Mechanical anchors and adhesive anchors not defined in 4.a.	N/A N/A	X –	– X	ACI 318: 17.8.2.4 ACI 318: 17.8.2	1705A.3.8, 1910A.5 (DSA-SS/CC) 1908.2.7 1705A.3.8, 1910A.5, (DSA-SS/CC) 1909.2.7
5. Verify use of required mix design	SEE BELOW	–	X	ACI 318: Ch. 19, 26.4.3, 26.4.4	1903A.5, 1903A.6, 1903A.7, 1904A.1, 1904A.2, 1908A.2, 1908A.3, 1910A.1, (DSA-SS/CC) 1909.2.1, 1909.2.2, 1909.2.3
6. Prior to concrete placement, fabricate specimens for strength tests, perform slump and air content tests, and determine the temperature of the concrete.	SEE BELOW	X	–	ASTM C172, ASTM C31, ACI 318: 26.5, 26.12	1705A.3.5, 1705A.3.6, 1905A.1.16, 1908A.5, 1908A.10, (DSA/SS/CC) 1908.5, 1909.3.7, 1908.10, 1909.4.1
7. Inspect concrete and shotcrete placement for proper application techniques.	N/A	X	–	ACI 318: 26.5	1908A.5, 1908A.6, 1908A.7, 1908A.8, 1908A.10, 1908A.12, (DSA-SS/CC) 1909.4.5
8. Verify maintenance of specified curing temperature and techniques.	SEE BELOW	–	X	ACI 318: 26.5.3-26.5.5	1908A.9
9. Inspect prestressed concrete for: a. Application of prestressing forces; and b. Grouting of bonded prestressing tendons.	N/A N/A	– –	X X	ACI 318: 26.10	1705A.3.4
10. Inspect erection of precast concrete members.	SEE BELOW	–	X	ACI 318, 26.9	–
11. Verify in-situ concrete strength, prior to stressing of tendons in post-tensioned concrete and prior to removal of shores and forms from beams and structural slabs.	N/A	–	X	ACI 318: 26.10.2, 26.11.2	1911A.1, (DSA-SS/CC) 1909.5
12. Inspect formwork for shape, location and dimensions of the concrete member being formed.	SEE BELOW	–	X	ACI 318, 26.11.1.2 (b)	1908A.11, (DSA-SS/CC) 1909.4.4

1704.2.5.1 Fabricator approval

Special inspections during fabrication are not required where the work is done on the premises of a fabricator approved to perform such work without special inspection. Approval shall be based on review of the fabricator's written fabrication procedures and quality control manuals that provide a basis for control of materials and workmanship, with periodic auditing of fabrication and quality control practices by an approved agency or the building official. At completion of fabrication, the approved fabricator shall submit a certificate of compliance to the owner or the owner's authorized agent for submittal to the building official as specified in Section 1704.5 stating that the work was performed in accordance with the approved construction documents.

Structure Cast is a PCI and NPCA Certified Plant, outside Inspection and Testing by others if required.

PRECAST CONCRETE PANEL MARK NUMBER LEGEND

MARK NO.

S = FLOOR SLAB
R = ROOF SLAB W/ R-19
W = WALL PANEL W/ R-12 INSULATION

W1.08A-12 (MARK NO. / CONTROL NO.)

FOR BID ONLY

Teter, LLP expressly reserves its common law copyright and other property rights in these plans. The ideas and designs incorporated herein, as an instrument of professional service, is not to be used in whole or in part, for any other project without prior written authorization.

MARK	DATE	DESCRIPTION
	11/1/22	DSA BACKCHECK

REGISTERED PROFESSIONAL ENGINEER JONATHAN MARK SCHLEIER No. S-5413 Exp. 5-31-2023 STRUCTURAL STATE OF CALIFORNIA

TETER, LLP
FRESNO HEADQUARTERS
VISALIA | BAKERSFIELD | MODESTO | SAN LUIS OBISPO
ARCHITECTS ENGINEERS CONNECTED

TULARE CAMPUS CTE
COLLEGE OF THE SEQUOIAS
4999 E. BARDSLEY AVE.
TULARE, CA

DRAWING TITLE
COVER SHEET - FIRE PUMP HOUSE

PROJECT NO.
21-12032

DRAWING
A-0.0

Design Aid 6.15.3 Minimum Length of Weld to Develop Full Strength of Bar. Weld Parallel to Bar Length[a,b,c]

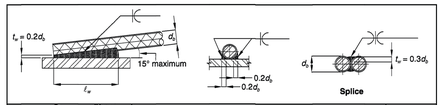

Electrode	Bar size, #	Plate thickness in.	Minimum length of weld, in.[a]					Min. splice length, in.
			1/4	5/16	3/8	7/16	1/2	
E80[c]	3		1 1/4	1 1/4	1 1/2	1 1/2	1 1/2	1
	4		1 1/2	1 1/2	1 1/2	1 1/2	1 1/2	1 1/4
	5		2 1/2	2 1/4	2 1/4	2 1/4	2 1/4	1 1/2
	6		2 1/2	2 1/2	2 1/2	2 1/2	2 1/2	1 1/2
	7		3 1/2	3	3	3	3	2
	8		5	4	3 1/2	3 1/2	3 1/2	2 1/2
	9		6 1/2	5	4 1/2	3 1/2	3 1/2	2 1/2
	10		8	6 1/4	5 1/2	4 1/2	4 1/2	3
	11		9 1/2	7 1/2	6 1/2	5 1/2	4 1/2	3 1/2
E90[c]	3		1 1/4	1 1/4	1 1/2	1 1/2	1 1/2	1
	4		1 1/2	1 1/2	1 1/2	1 1/2	1 1/2	1
	5		2	2	2	2	2	1 1/4
	6		2 1/2	2 1/2	2 1/2	2 1/2	2 1/2	1 1/2
	7		3 1/2	3	2 1/2	2 1/2	2 1/2	1 1/2
	8		5	4	3 1/2	3	3	2
	9		6 1/2	5	4 1/2	3 1/2	3 1/2	2 1/2
	10		8	6 1/4	5 1/2	4 1/2	4	2 1/2
	11		9 1/2	7 1/2	6 1/2	5 1/2	5	2 1/2

a. Lengths above the heavy line are governed by weld strength. Lengths below the heavy line are governed by plate shear.
Basis: bar f_y = 60 ksi; plate F_y = 36 ksi; shear on plate limited to 0.9(0.6)(36) = 19.44 ksi.
b. Weld length listed is the required effective length of weld. Engineer should consider whether weld at start and stop is fully effective.
c. Refer to Design Aid 15.4.2 for specifications of flare bevel groove welds.
d. Refer to AWS D1.1 Table 3.1 – Prequalified Base Metal – Filler Material Combinations for Matching Strength and AWS D1.4 Table 5.1 Matching Filler Metal Requirements. Use E80 Electrodes for ASTM A706 rebar; use E90 electrodes for ASTM A615 rebar.

Design Aid 6.15.4 Size of Fillet Weld Required to Develop Full Strength of Bar. Butt Weld.

BAR PERPENDICULAR TO PLATE, WELDED ONE SIDE

$\ell_w = \pi\left(d_b - \frac{a}{2}\right)$

Plate = F_y = 36 ksi

Plate area = $\pi(d_b + 2_a)t_w$

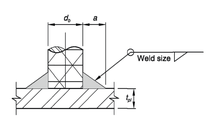

Bar size, #	E70 electrode: Weld size,[b] in.	E70 electrode: Minimum plate thickness,[c] in.	E80 electrode[d]: Weld size,[b] in.	E80 electrode[d]: Minimum plate thickness,[c] in.	E90 electrode[d]: Weld size,[b] in.	E90 electrode[d]: Minimum plate thickness[c] t_{pr} in.
Grade 40 bar						
3	3/16	1/4	3/16	1/4	3/16	1/4
4	1/4	1/4	3/16	1/4	3/16	1/4
5	1/4	1/4	1/4	1/4	1/4	1/4
6	5/16	1/4	1/4	1/4	1/4	1/4
7	5/16	5/16	5/16	5/16	5/16	5/16
8	7/16	5/16	1/8	5/16	5/16	1/8
9	7/16	1/8	7/16	1/8	1/8	1/8
10	1/2	1/8	7/16	7/16	7/16	7/16
11	9/16	7/16	1/2	7/16	7/16	1/2
Grade 60 bar[d]						
3			3/16	1/4	3/16	1/4
4			1/4	1/4	1/4	1/4
5			5/16	1/4	5/16	5/16
6			5/16	5/16	5/16	5/16
7			7/16	5/16	5/16	5/16
8			1/2	7/16	7/16	7/16
9			9/16	1/2	1/2	1/2
10			5/8	1/2	5/16	5/16
11			11/16	5/16	5/16	5/16

a. Refer to AWS D1.1 Table 3.1 – Prequalified Base Metal – Filler Material Combinations for Matching Strength and AWS D1.4 Table 5.1 Matching Filler Metal Requirements. Use E80 Electrodes for ASTM A706 rebar; use E90 electrodes for ASTM A615 rebar.
b. A minimum of 1/16 in. weld size is suggested.
c. Theoretical thickness for shear stress on base metal = 0.9(0.6)(36) ksi. A more practical thickness might be taken as 1/2 d_b as used with headed studs. A minimum of 1/4 in. plate thickness is suggested.
d. E70 electrodes are not permitted for grade 60 reinforcement.

15.3 MATERIAL PROPERTIES — PRESTRESSING STEEL

Design Aid 15.3.1 Properties and Design Strengths of Prestressing Strand and Wire

Seven-wire strand, f_{pu} = 270 ksi						
Nominal diameter, in.	3/8	7/16	1/2	1/2 Special[a]	9/16	0.6
Area, in.^{2}	0.085	0.115	0.153	0.167	0.192	0.217
Weight, lb/ft	0.29	0.40	0.52	0.53	0.65	0.74
$0.7f_{pu}A_{pu}$, kip	16.1	21.7	28.9	31.6	36.3	41.0
$0.75f_{pu}A_{pu}$, kip	17.2	23.3	31.0	33.8	38.9	43.9
$0.8f_{pu}A_{pu}$, kip	18.4	24.8	33.0	36.1	41.5	46.9
$f_{pu}A_{pu}$, kip	23.0	31.1	41.3	45.1	51.8	58.6

Seven-wire strand, f_{pu} = 250 ksi						
Nominal diameter, in.	1/2	9/16	5/8	7/16	1/2	0.6
Area, in.^{2}	0.036	0.058	0.080	0.108	0.144	0.216
Weight, lb/ft	0.12	0.20	0.27	0.37	0.49	0.74
$0.7f_{pu}A_{pu}$, kip	6.3	10.2	14.0	18.9	25.2	37.8
$0.8f_{pu}A_{pu}$, kip	7.2	11.6	16.0	21.6	28.8	43.2
$f_{pu}A_{pu}$, kip	9.0	14.5	20.0	27.0	36.0	54.0

Three- and four-wire strand, f_{pu} = 250 ksi				
Nominal diameter, in.	1/4	5/16	3/8	7/16
Number of wires	3	3	3	4
Area, in.^{2}	0.036	0.058	0.075	0.106
Weight, lb/ft	0.12	0.20	0.26	0.36
$0.7f_{pu}A_{pu}$, kip	6.3	10.2	13.1	18.6
$0.8f_{pu}A_{pu}$, kip	7.2	11.6	15.0	21.2
$f_{pu}A_{pu}$, kip	9.0	14.5	18.8	26.5

Prestressing Wire										
Diameter, in.	0.105	0.120	0.135	0.148	0.162	0.177	0.192	0.196	0.250	0.276
Area, in.^{2}	0.0087	0.0114	0.0143	0.0173	0.0205	0.0246	0.0289	0.0302	0.0491	0.0598
Weight, lb/ft	0.030	0.039	0.049	0.059	0.070	0.083	0.098	0.10	0.17	0.20
Ultimate strength f_{pu}, ksi	279	273	268	263	259	255	250	250	240	235
$0.7f_{pu}A_{pu}$, kip	1.70	2.18	2.68	3.18	3.73	4.39	5.06	5.29	8.25	9.84
$0.8f_{pu}A_{pu}$, kip	1.94	2.49	3.07	3.64	4.27	5.02	5.78	6.04	9.43	11.24
$f_{pu}A_{pu}$, kip	2.43	3.11	3.83	4.55	5.34	6.27	7.23	7.55	11.78	14.05

a. The 1/2 in. special strand has a larger actual diameter than the 1/2 in. regular strand. The table values take this difference into account.

15.4 MATERIAL PROPERTIES — REINFORCING BARS

Design Aid 15.4.1 Reinforcing Bar Data

ASTM standard reinforcing bars						
Bar size designation[a]		Nominal dimensions				
		Diameter		Area		Weight or mass
U.S. customary, #	SI, #	in.	mm	in.^{2}	mm^2	lb/ft	kg/m
3	10	0.375	9.5	0.11	71	0.376	0.560
4	13	0.500	12.7	0.20	129	0.668	0.994
5	16	0.625	15.9	0.31	199	1.043	1.552
6	19	0.750	19.1	0.44	284	1.502	2.235
7	22	0.875	22.2	0.60	387	2.044	3.042
8	25	1.000	25.4	0.79	510	2.670	3.973
9	29	1.128	28.7	1.00	645	3.400	5.060
10	32	1.270	32.3	1.27	819	4.303	6.404
11	36	1.410	35.8	1.56	1006	5.313	7.907
14	43	1.693	43.0	2.25	1452	7.650	11.380
18	57	2.257	57.3	4.00	2581	13.600	20.240

a. Many mills will mark and supply bars only with metric (SI) designation, which is a soft conversion. Soft conversion means that the metric (SI) bars have exactly the same dimensions and properties as the equivalent U.S. customary designation.

Standard hooks

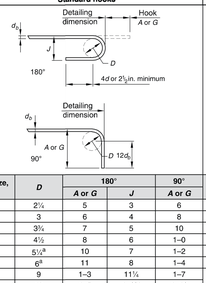

Stirrup and tie-hooks

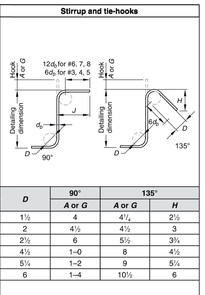

Bar size, #	D	180° A or G	180° J	90° A or G	D	90° A or G	135° A or G	135° H
3	2¼	5	3	6	1½	4	4½	2½
4	3	6	4	8	2	4½	4½	3
5	3½	7	5	10	2½	6	5½	3¾
6	4½	8	6	1–0	4½	1–0	8	4½
7	5½[a]	10	7	1–2	5½	1–2	9	5¼
8	6[a]	11	8	1–4	6	1–4	10½	6
9	9	1–3	11¼	1–7	U.S. customary units: in. or ft-in.			
10	10	1–5	1–0½	1–10				
11	11	1–7	1–1½	2–0				
14	1–5½	2–3	1–9	2–7				
18	1–10½	3–0	2–3	3–5				

a. ASTM A767 requires that bars bent cold **prior to hot-dip galvanizing** must be fabricated to a minimum bend diameter equal to 7 in. for #7 bar and 8 in. for #8 bar.

Design Aid 15.4.4 Required Development Lengths[a] in., for Reinforcing Bars (Grade 60)

Tension development length:

$\ell_d = 2400\frac{d_b}{\sqrt{f'_c}}$; min. 12 in. (#6 and smaller)

$\ell_d = 3000\frac{d_b}{\sqrt{f'_c}}$; min. 12 in. (#7 and larger)

Note: For Grade 40 bars, replace 2400 and 3000 with 1600 and 2000, respectively.

Multiply ℓ_d values by :
(a) 1.3 for lightweight concrete
(b) 1.3 for "top bars"[b]
(c) 1.5 for epoxy-coated bars with cover < $3d_b$ or clear spacing < $6d_b$, otherwise multiply by 1.2
Note: Product of factors (b) and (c) need not exceed 1.7.
(d) 1.5 for bars with less than minimum stirrups or ties, clear spacing less than $2d_b$, or clear cover less than d_b
(e) A_s (required)/A_s (provided) for excess reinforcement unless development of f_y is specifically required. This multiplier is not to be applied to lap splices per ACI 318-05, Section R12.15.1.
(f) For tension lap splices, item (e) does not apply. Lap splice lengths must conform to ACI 318-05, Section 12.15.

Compression development length:

ℓ_{dc} = larger of $\frac{1200d_b}{\sqrt{f'_c}}$ or $18d_b$ but no less than 8 in.

Note: For Grade 40 bars, replace 1200 with 800 and 18 with 12.

Multiply ℓ_d values by:
(a) A_s (required)/A_s (provided) for excess reinforcement
(b) 0.75 for adequate spiral or tie enclosure (see ACI 318-05, Section 12.3.3b)

Compression splice lap length:
Lap length = $30d_b$; min. 12 in. for f_y = 60,000 psi
Lap length = $(0.0009f_y - 24)\,d_b$ for f_y > 60,000 psi

The values of $\sqrt{f'_c}$ used in these equations shall not exceed 100 psi (see ACI 318-05, Section 12.1.2).

Bar size, #	f'_c = 3000 psi: Tension ℓ_d	Tension 1.3/ℓ_d	Tension 1.5/ℓ_d	Compression ℓ_{dc}	f'_c = 4000 psi: Tension ℓ_d	Tension 1.3/ℓ_d	Tension 1.5/ℓ_d	Compression ℓ_{dc}	f'_c = 5000 psi: Tension ℓ_d	Tension 1.3/ℓ_d	Tension 1.5/ℓ_d	Compression ℓ_{dc}	f'_c = 6000 psi: Tension ℓ_d	Tension 1.3/ℓ_d	Tension 1.5/ℓ_d	Compression ℓ_{dc}	Min. comp. splice
3	16	21	25	8	14	18	21	8	13	17	19	8	12	15	17	8	12
4	22	28	33	11	19	25	28	9	17	22	25	9	15	20	23	9	15
5	27	36	41	14	24	31	36	12	21	28	32	11	19	25	29	11	19
6	33	43	49	16	28	37	43	14	25	33	38	14	23	30	35	14	23
7	48	62	72	19	42	54	62	17	37	48	56	16	34	44	51	16	26
8	55	71	82	22	47	62	71	19	42	55	64	18	39	50	58	18	30
9	62	80	93	25	54	70	80	21	48	62	72	20	44	57	66	20	34
10	70	90	104	28	60	78	90	24	54	70	81	23	49	64	74	23	38
11	77	100	116	31	67	87	100	27	60	78	90	25	55	71	82	25	42

Bar size, #	f'_c = 7000 psi: Tension ℓ_d	Tension 1.3/ℓ_d	Tension 1.5/ℓ_d	Compression ℓ_{dc}	f'_c = 8000 psi: Tension ℓ_d	Tension 1.3/ℓ_d	Tension 1.5/ℓ_d	Compression ℓ_{dc}	f'_c = 9000 psi: Tension ℓ_d	Tension 1.3/ℓ_d	Tension 1.5/ℓ_d	Compression ℓ_{dc}	f'_c ≥ 10,000 psi: Tension ℓ_d	Tension 1.3/ℓ_d	Tension 1.5/ℓ_d	Compression ℓ_{dc}	Min. comp. splice
3	12	14	16	8	12	13	15	8	12	12	14	8	9	12	14	8	12
4	14	19	22	9	13	17	20	9	13	16	19	8	12	16	18	8	15
5	18	23	27	11	17	22	25	11	16	21	24	8	15	20	23	8	19
6	22	28	32	14	20	26	30	14	19	25	28	9	18	23	27	9	23
7	31	41	47	16	29	38	44	16	28	36	42	11	26	34	39	11	26
8	36	47	54	18	34	44	50	18	32	41	47	13	30	39	45	12	30
9	40	53	61	20	38	49	57	20	36	46	54	14	34	44	51	14	34
10	46	59	68	23	43	55	64	23	40	52	60	16	38	49	56	15	38
11	61	66	76	25	47	61	71	25	45	58	67	17	41	54	62	17	42

a. For limitations and items related to hooked bars, stirrups or ties in excess of minimum, and spacing of non-contact lap splices, etc., see ACI 318-05, Chapter 12.
b. A top bar is any horizontal reinforcement placed such that more than 12 in. of fresh concrete is cast below the development length.
Note: comp. = compression; min. = minimum.

Design Aid 15.4.4 Required Development Lengths[a] in., for Reinforcing Bars (Grade 60) (Cont.)

Minimum tension embedment lengths ℓ_{dh} for standard hooks, in. General use (non-seismic) [see ACI 318-05, Sections 12.5.2 and 12.5.3(a)]								
Bar size, #	Normalweight concrete, f'_c, psi: 3000	4000	5000	6000	7000	8000	9000	≥ 10,000
3	6	6	6	6	6	6	6	6
4	8	7	6	6	6	6	6	6
5	10	9	8	7	7	6	6	6
6	12	10	9	8	8	7	7	6
7	14	12	11	10	9	9	8	7
8	16	14	12	11	10	10	9	8
9	18	15	14	13	12	11	10	9
10	20	17	15	14	13	12	11	11
11	22	19	17	16	14	14	13	12

Notes: 1. Side cover ≥ 2½ in.
2. End cover (90 deg hooks) ≥ 2 in.
3. When the full ℓ_d cannot be provided, do not prorate A_s provided for interpolation or other means. Use a smaller diameter bar for which ℓ_{dh} can be provided.

Minimum tension embedment lengths ℓ_{dh} for standard hooks, in. Special confinement (non-seismic) [see ACI 318-05, Section 12.5.3(b)]								
Bar size, #	Normalweight concrete, f'_c, psi: 3000	4000	5000	6000	7000	8000	9000	≥ 10,000
3	6	6	6	6	6	6	6	6
4	6	6	6	6	6	6	6	6
5	8	7	6	6	6	6	6	6
6	10	8	7	7	6	6	6	6
7	11	10	9	8	7	7	6	6
8	13	11	10	9	8	8	7	6
9	14	12	11	10	9	9	8	7
10	16	14	12	11	11	10	9	9
11	18	15	14	13	12	12	10	10

Notes: 1. Side cover ≥ 2½ in.
2. End cover (90 deg hooks) ≥ 2 in.
3. When the full ℓ_d cannot be provided, do not prorate A_s provided for interpolation or other means. Use a smaller diameter bar for which ℓ_{dh} can be provided.

Bars with standard hooks

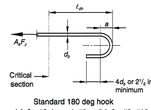

Standard 180 deg hook

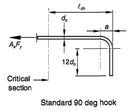

Standard 90 deg hook

Dimension $a = 4d_b$ for #3 through #8, = $5d_b$ for #9, #10, and #11
Modification factors:
Grade 40 bars = 0.67
Lightweight concrete = 1.3
Epoxy-coated reinforcement = 1.2

Design Aid 15.7.2 Typical Welded Joints in Precast Concrete Construction (Cont.)

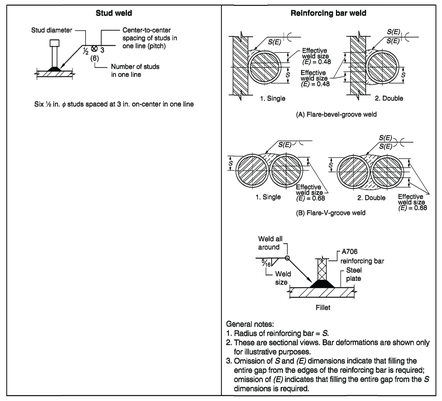

General notes:
1. Radius of reinforcing bar = *S*.
2. These are sectional views. Bar deformations are shown only for illustrative purposes.
3. Omission of *S* and *(E)* dimensions indicate that filling the entire gap from the edges of the reinforcing bar is required; omission of *(E)* indicates that filling the entire gap from the *S* dimensions is required.

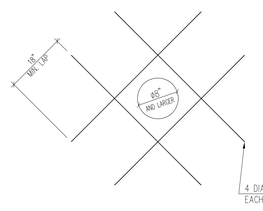

ADDITIONAL REINFORCEMENT AT CIRCULAR OPENING'S 8" OR LARGER

NOTES:

1. ADDITIONAL BARS As_1 AND As_2 TO BE PLACED:
A) AT CENTERLINE OF WALLS OR SLABS WHERE ONE LAYER OF REINFORCEMENT IS PROVIDED.
B) AT EACH FACE OF WALLS OR SLABS WHERE TWO LAYERS OF REINFORCEMENT ARE PROVIDED.

2. THIS DETAIL TO BE USED ONLY WHEN NO OTHER DETAIL IS INDICATED IN THE DRAWINGS.

FOR BID ONLY

Teter, LLP expressly reserves its common law copyright and other property rights in these plans. These plans are not to be changed or copied in any form or manner whatsoever, nor are they to be assigned to any third party, without first obtaining the expressed written permission and consent of Teter, LLP. Any unauthorized use of these plans will be at the user's sole risk and without liability to Teter, LLP and user will hold harmless and indemnify Teter, LLP from any and all claims, damages, losses, and expenses including attorney's fees arising out of or resulting therefrom. Visual contact with these plans shall constitute prima facie evidence of acceptance of these restrictions.

MARK	DATE	DESCRIPTION
	11/1/22	DSA BACKCHECK

REGISTERED PROFESSIONAL ENGINEER JONATHAN MARK TETER Exp. 5-31-2023 STRUCTURAL STATE OF CALIFORNIA

TETER, LLP
FRESNO HEADQUARTERS
VISALIA | BAKERSFIELD | MODESTO | SAN LUIS OBISPO
ARCHITECTS ENGINEERS CONNECTED

TETER

TULARE CAMPUS CTE
COLLEGE OF THE SEQUOIAS
4999 E. BARDSLEY AVE.
TULARE, CA

DRAWING TITLE
GENERAL NOTES - FIRE PUMP HOUSE

PROJECT NO.
21-12032

DRAWING
A-0.1

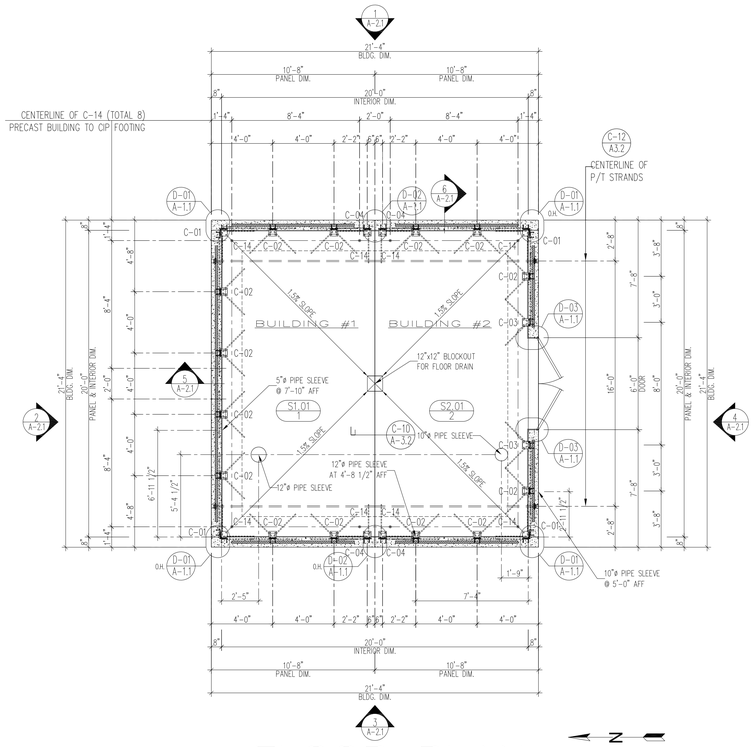

FLOOR PLAN

SCALE: 1/4"=1'-0"

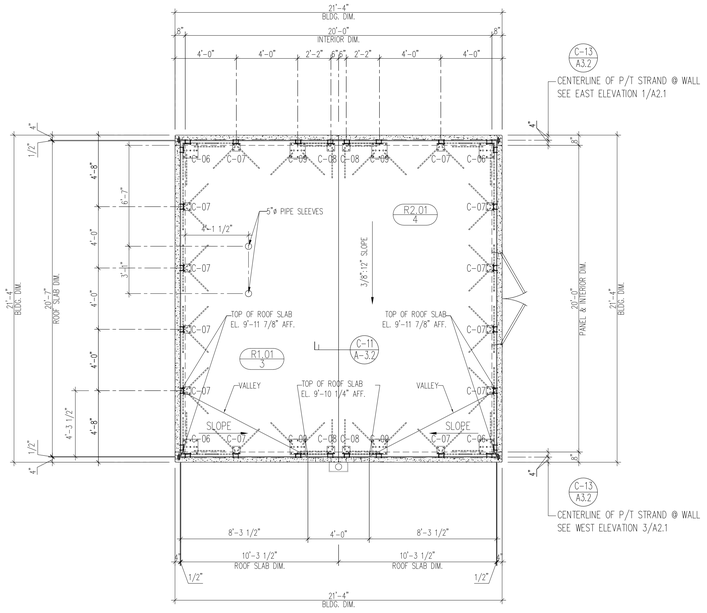

ROOF PLAN

SCALE: 1/4"=1'-0"

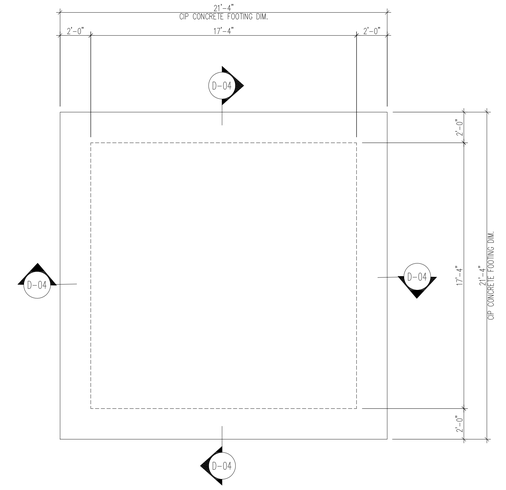

CIP CONCRETE FOOTING PLAN

SCALE: 1/4"=1'-0"

FINISH NOTES:
1. ALL EXTERIOR WALLS SHALL BE LIGHT ETCH FINISH.
2. INTERIOR WALLS & CEILING SHALL BE SMOOTH STEEL TROWEL FINISH, STAINED WHITE.
3. INTERIOR FLOORS SHALL BE SMOOTH STEEL TROWEL FINISH.
4. ROOF SHALL BE SMOOTH STEEL TROWEL FINISH.

BUILDING INSTALLATION POST-TENSIONING:
1. Jacking Force $0.7f_{pu}A_{ps}$=28.9 kips per Strand.
2. 0.5"ø(As=0.153 in^2) f_{pu}=270 ksi 7-Wire, Low-Relaxation PT-Strand per ASTM A416.

NOTES:
1. FOR CONNECTION DETAILS SEE SHEETS "A-3.1" & "A-3.2".

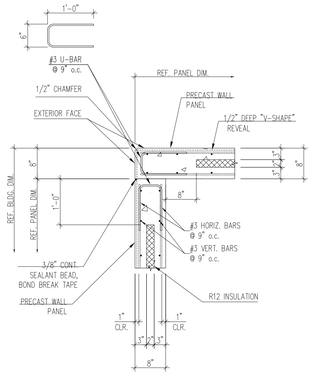

PLAN DETAIL @ CORNER

SCALE: 3/4"=1'-0"

D-01

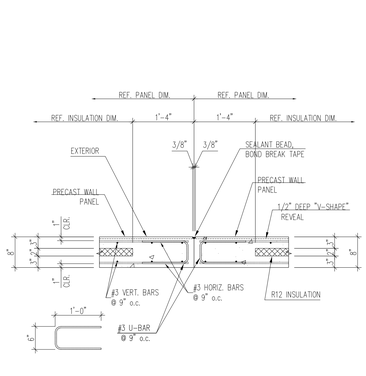

PLAN DETAIL @ PANEL JOINT

SCALE: 3/4"=1'-0"

D-02

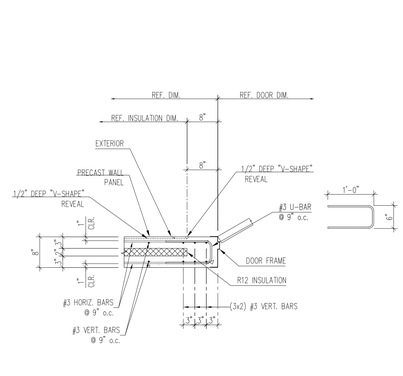

DOOR JAMB DETAIL

SCALE: 3/4"=1'-0"

D-03

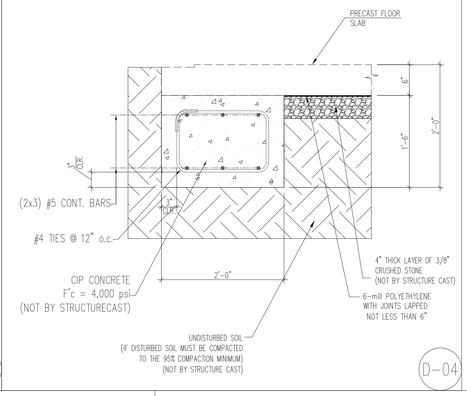

D-04

FOR BID ONLY

Teter, LLP expressly reserves its common law copyright and other property rights in these plans. These plans are not to be changed or copied in any form or manner whatsoever, nor are they to be assigned to any third party, without first obtaining the express written authorization of Teter, LLP.

MARK	DATE	DESCRIPTION
	11/1/22	DSA BACKCHECK

REGISTERED PROFESSIONAL ENGINEER JONATHAN MARK STEER 5-31-2023 STRUCTURAL STATE OF CALIFORNIA

TETER, LLP
FRESNO HEADQUARTERS
VISALIA | BAKERSFIELD | MODESTO | SAN LUIS OBISPO
ARCHITECTS ENGINEERS CONNECTED

TETER

TULARE CAMPUS CTE
COLLEGE OF THE SEQUOIAS
4999 E. BARDSLEY AVE.
TULARE, CA

DRAWING TITLE
FLOOR PLAN, ROOF PLAN & ARCHITECTURAL DETAILS-
FIRE PUMP HOUSE

PROJECT NO.
21-12032

DRAWING
A-1.1

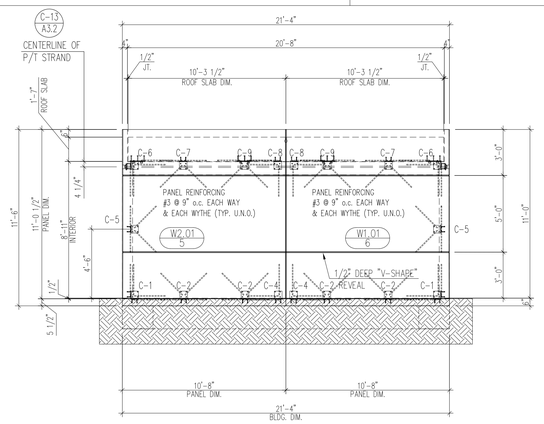

EAST ELEVATION

SCALE: 1/4"=1'-0"

1

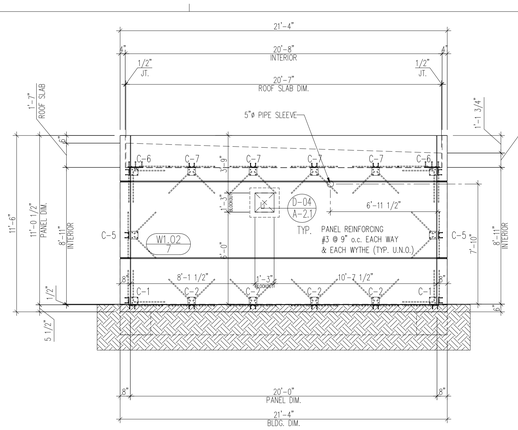

NORTH ELEVATION

SCALE: 1/4"=1'-0"

2

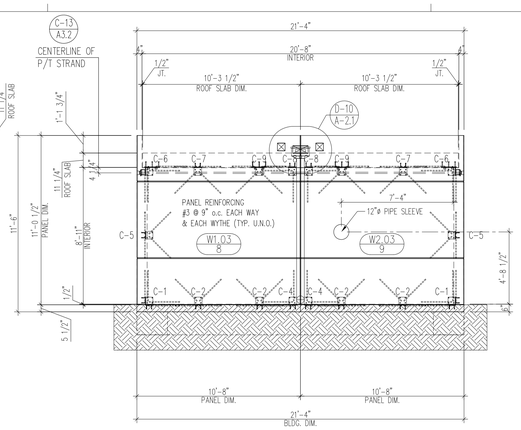

WEST ELEVATION

SCALE: 1/4"=1'-0"

3

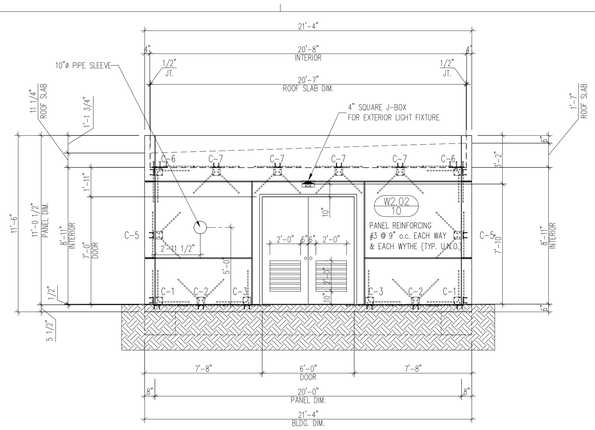

SOUTH ELEVATION

SCALE: 1/4"=1'-0"

4

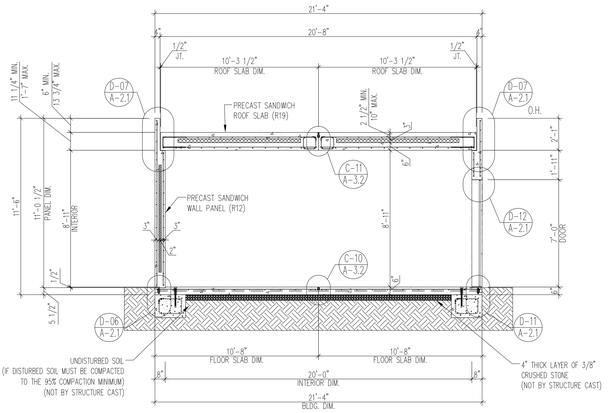

SECTION

SCALE: 1/4"=1'-0"

5

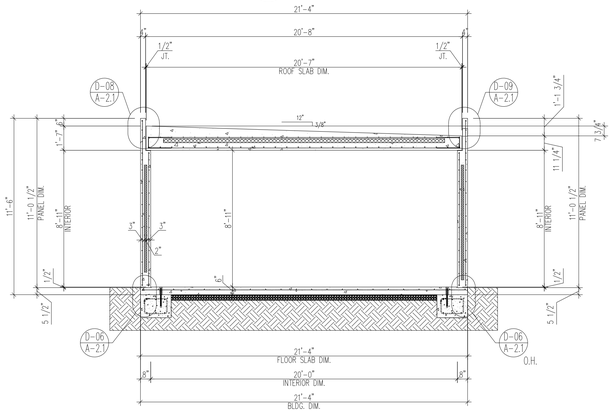

SECTION

SCALE: 1/4"=1'-0"

6

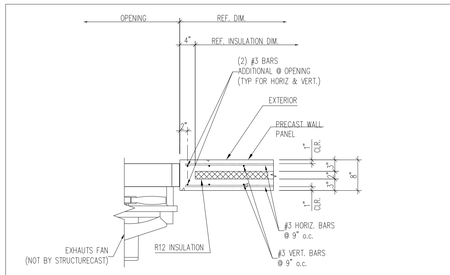

FAN JAMB DETAIL

SCALE: 3/4"=1'-0"

D-04

NOT USED

D-05

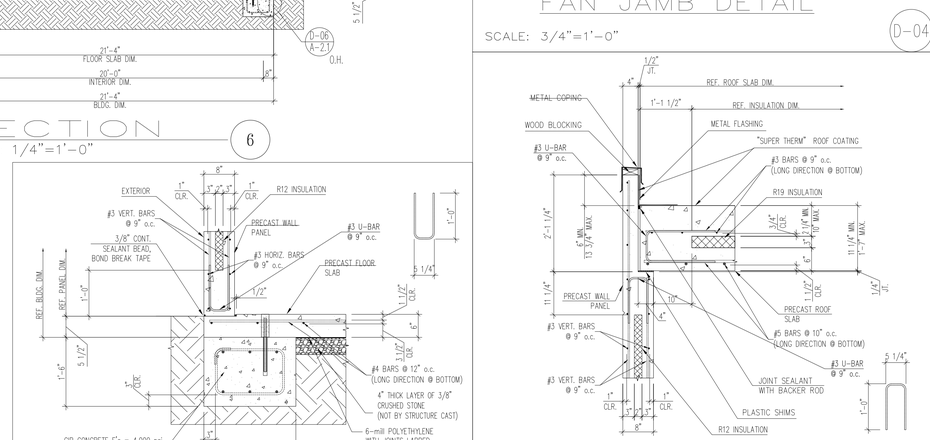

VERTICAL DETAIL @ ROOF SLAB

SCALE: 3/4"=1'-0"

D-07

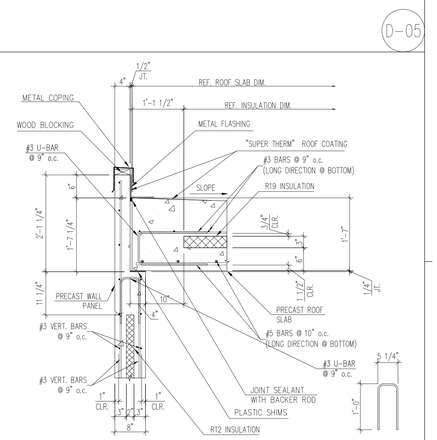

VERTICAL DETAIL @ ROOF SLAB

SCALE: 3/4"=1'-0"

D-08

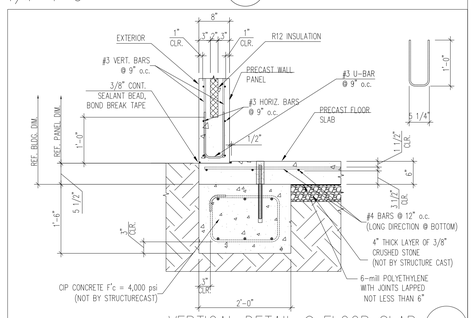

SCALE: 3/4"=1'-0"

VERTICAL DETAIL @ FLOOR SLAB

D-06

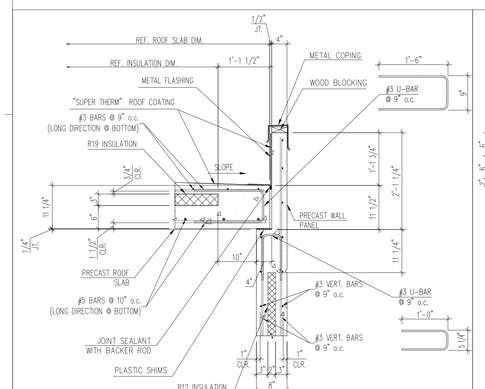

VERTICAL DETAIL @ ROOF SLAB

SCALE: 3/4"=1'-0"

D-09

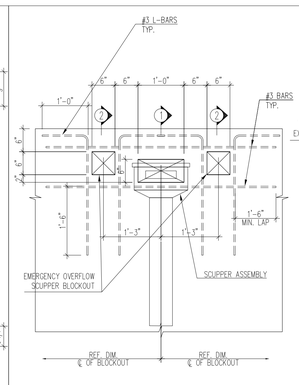

ELEVATION

NOTE:
FOR PRECAST PANELS REINFORCING SEE DETAIL "D-09".

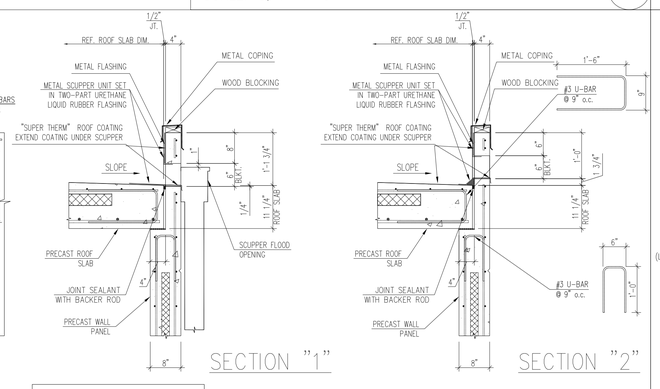

SECTION "1"

SECTION "2"

SCUPPER DETAIL

SCALE: 3/4"=1'-0"

D-10

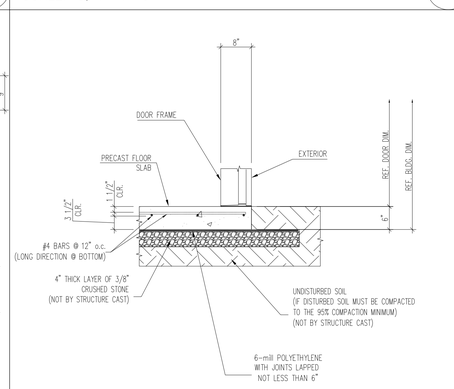

DOOR SILL DETAIL

SCALE: 3/4"=1'-0"

D-11

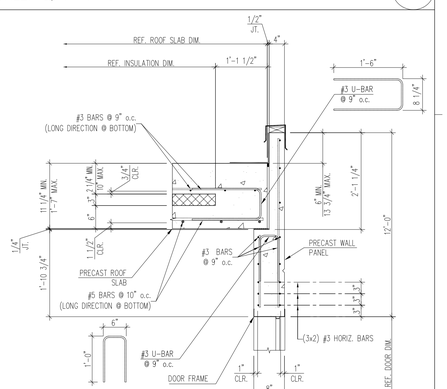

DOOR HEAD DETAIL

SCALE: 3/4"=1'-0"

D-12

FOR BID ONLY

Teter, LLP expressly reserves its common law copyright and other property rights in these plans. These plans are not to be changed or copied in any form or manner whatsoever, nor are they to be assigned to any third party, without first obtaining the express written authorization of Teter, LLP.

MARK	DATE	DESCRIPTION
	11/1/22	DSA BACKCHECK

REGISTERED PROFESSIONAL ENGINEER
JONATHAN MARK SIKES
No. S-5417
Exp. 5-31-2023
STRUCTURAL
STATE OF CALIFORNIA

TETER, LLP
FRESNO HEADQUARTERS
VISALIA I BAKERSFIELD I MODESTO I SAN LUIS OBISPO
ARCHITECTS ENGINEERS CONNECTED

TETER

TULARE CAMPUS CTE
COLLEGE OF THE SEQUOIAS
4999 E. BARDSLEY AVE.
TULARE, CA

DRAWING TITLE
EXTERIOR ELEVATIONS, BUILDING SECTIONS & ARCHITECTURAL DETAILS-
FIRE PUMP HOUSE

PROJECT NO.
21-12032

DRAWING
A-2.1

NOTE:
DEFORMED BAR ANCHORS & HEADED STUDS CONFORM
TO AWS D1.1-08 TABLE 7.1, TYPE C STUDS.

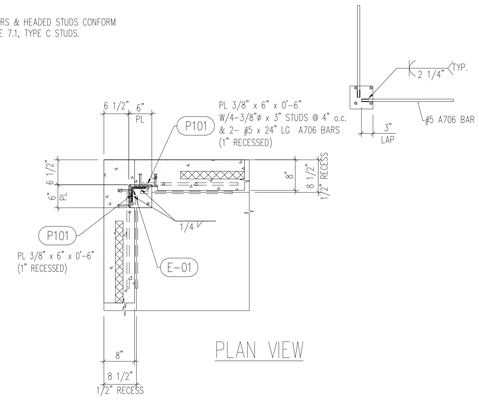

PLAN VIEW

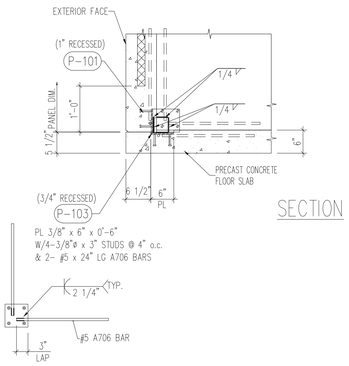

SECTION

MK. NO.	DESCRIPTION	QTY.
E-01	L 4" x 4" x 3/8" x 0'-4"	ONE

PANEL-PANEL
TO FLOOR SLAB

3/4"=1'-0"

C-01

NOTE:
DEFORMED BAR ANCHORS & HEADED STUDS CONFORM
TO AWS D1.1-08 TABLE 7.1, TYPE C STUDS.

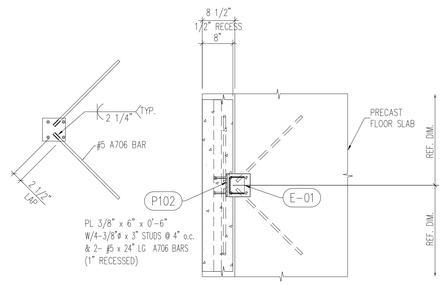

PLAN VIEW

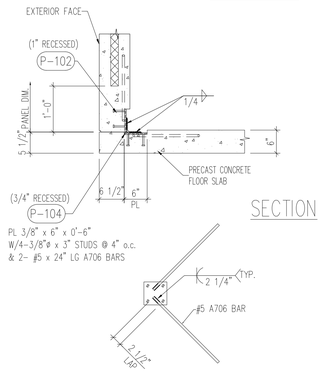

SECTION

MK. NO.	DESCRIPTION	QTY.
E-01	L 4" x 4" x 3/8" x 0'-4"	ONE

PANEL
TO FLOOR SLAB

3/4"=1'-0"

C-02

NOTE:
DEFORMED BAR ANCHORS & HEADED STUDS CONFORM
TO AWS D1.1-08 TABLE 7.1, TYPE C STUDS.

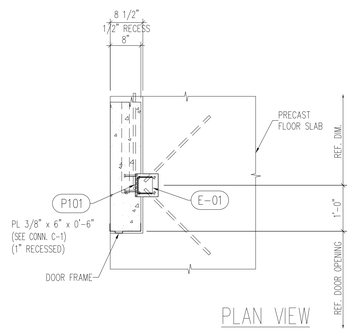

PLAN VIEW

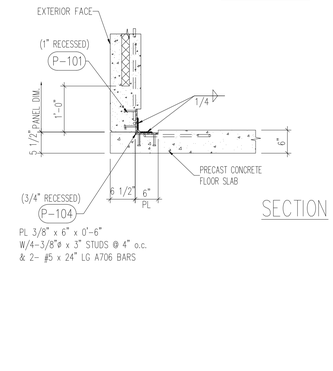

SECTION

MK. NO.	DESCRIPTION	QTY.
E-01	L 4" x 4" x 3/8" x 0'-4"	ONE

PANEL
TO FLOOR SLAB

3/4"=1'-0"

C-03

NOTE:
DEFORMED BAR ANCHORS & HEADED STUDS CONFORM
TO AWS D1.1-08 TABLE 7.1, TYPE C STUDS.

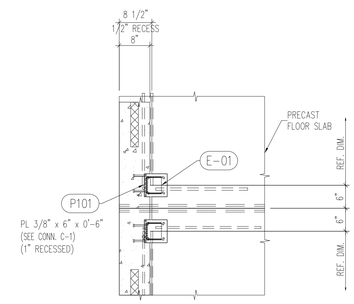

PLAN VIEW

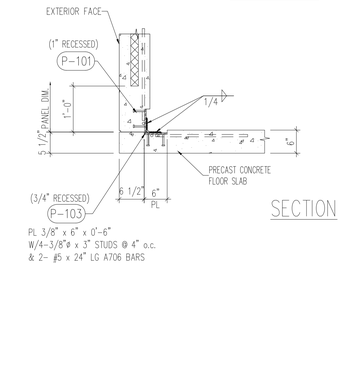

SECTION

MK. NO.	DESCRIPTION	QTY.
E-01	L 4" x 4" x 3/8" x 0'-4"	ONE

PANEL
TO FLOOR SLAB

3/4"=1'-0"

C-04

NOTE:
DEFORMED BAR ANCHORS & HEADED STUDS CONFORM
TO AWS D1.1-08 TABLE 7.1, TYPE C STUDS.

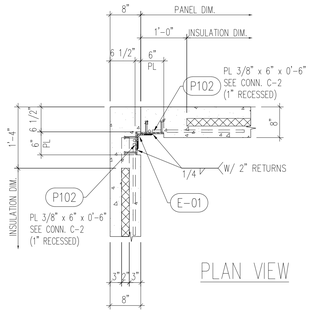

PLAN VIEW

MK. NO.	DESCRIPTION	QTY.
E-01	L 4" x 4" x 3/8" x 0'-4"	ONE

PANEL TO PANEL

3/4"=1'-0"

C-05

NOTE:
DEFORMED BAR ANCHORS & HEADED STUDS CONFORM
TO AWS D1.1-08 TABLE 7.1, TYPE C STUDS.

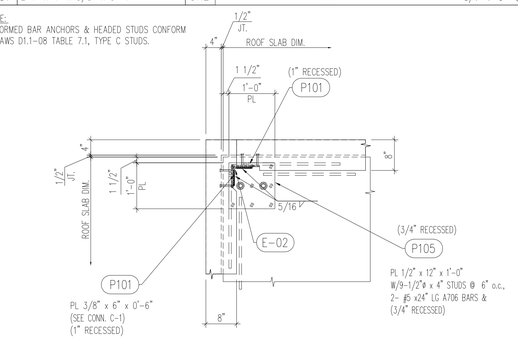

SOFFIT VIEW

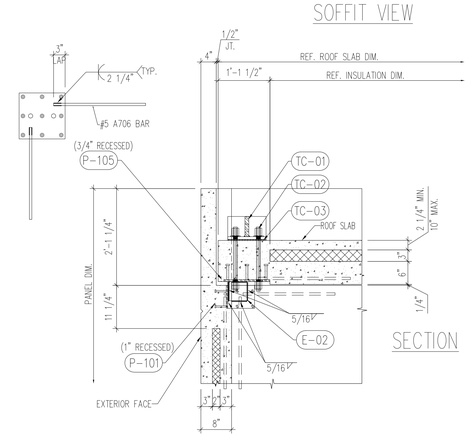

SECTION

MK. NO.	DESCRIPTION	QTY.
E-02	L 5" x 5" x 3/8" x 0'-5"	ONE
TC-01	L 6x6x3/4x0'-10" W/PL 1" & HOLES	ONE
TC-02	1"ø24" LG O.S. B-12 COIL ROD W/ B25 COIL NUTS	2
TC-03	NEOPRENE PAD 6" x 12" (thk. ±1/4")W/ HOLES	ONE

PANEL-PANEL
TO ROOF SLAB

3/4"=1'-0"

C-06

NOTE:
DEFORMED BAR ANCHORS & HEADED STUDS CONFORM
TO AWS D1.1-08 TABLE 7.1, TYPE C STUDS.

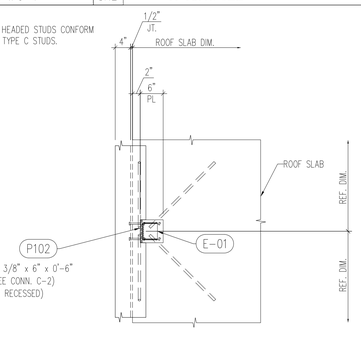

SOFFIT VIEW

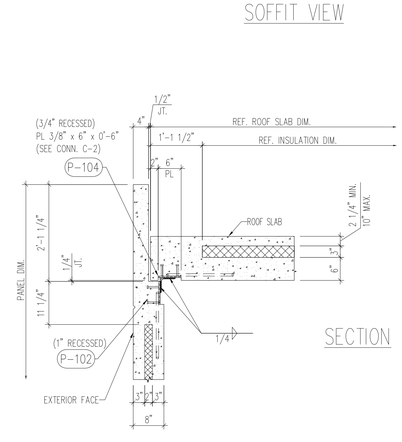

SECTION

MK. NO.	DESCRIPTION	QTY.
E-01	L 4" x 4" x 3/8" x 0'-4"	ONE

PANEL TO ROOF SLAB

3/4"=1'-0"

C-07

FOR BID ONLY

Teter, LLP expressly reserves its common law copyright and other property rights in these plans. The ideas and designs incorporated herein, as an instrument of professional service, is not to be used in whole or in part, for any other project without prior written authorization.

MARK	DATE	DESCRIPTION
	11/1/22	DSA BACKCHECK

REGISTERED PROFESSIONAL ENGINEER
JONATHAN MARK LOEB
No. S-5731
Exp. 5-31-2023
STRUCTURAL
STATE OF CALIFORNIA

TETER, LLP
FRESNO HEADQUARTERS
VISALIA | BAKERSFIELD | MODESTO | SAN LUIS OBISPO
ARCHITECTS ENGINEERS CONNECTED

TETER

TULARE CAMPUS CTE
COLLEGE OF THE SEQUOIAS
4999 E. BARDSLEY AVE.
TULARE, CA

DRAWING TITLE
CONNECTION DETAILS - FIRE PUMP HOUSE

PROJECT NO.
21-12032

DRAWING
A-3.1

NOTE:
DEFORMED BAR ANCHORS & HEADED STUDS CONFORM TO AWS D1.1-08 TABLE 7.1, TYPE C STUDS.

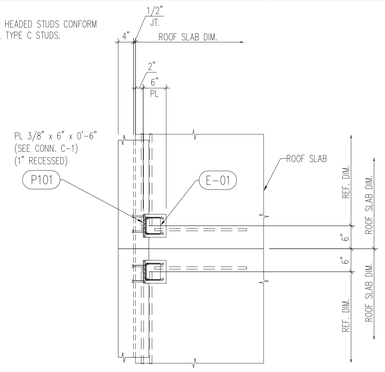

SOFFIT VIEW

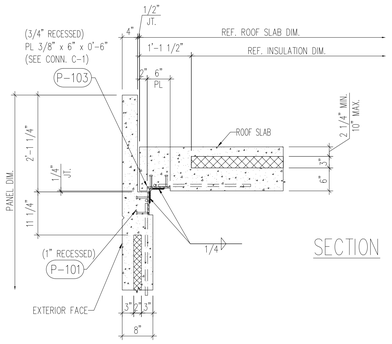

SECTION

MK. NO.	DESCRIPTION	QTY.
E-01	L 4" x 4" x 3/8" x 0'-4"	ONE

PANEL TO ROOF SLAB

3/4"=1'-0"

C-08

NOTE:
DEFORMED BAR ANCHORS & HEADED STUDS CONFORM TO AWS D1.1-08 TABLE 7.1, TYPE C STUDS.

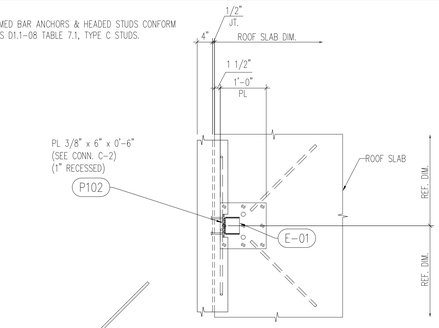

SOFFIT VIEW

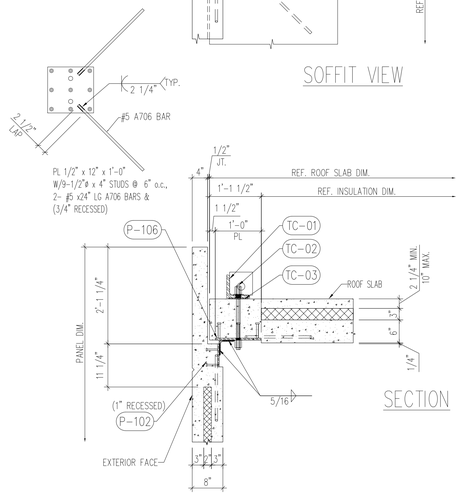

SECTION

MK. NO.	DESCRIPTION	QTY.
E-01	L 4" x 4" x 3/8" x 0'-4"	ONE
TC-01	L 6x6x3/4x0'-10" W/PL 1" & HOLES	ONE
TC-02	1"ø x24" LG D.S. B-12 COIL ROD W/ B25 COIL NUTS	2
TC-03	NEOPRENE PAD 6" x 12" (Thk. ±1/4")W/ HOLES	ONE

PANEL TO ROOF SLAB

3/4"=1'-0"

C-09

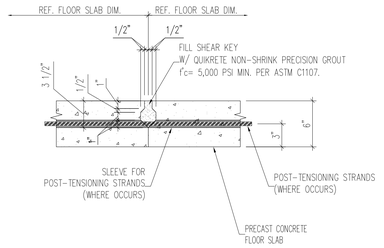

SECTION

- Grout: 8000 psi ASTM C1107.

BUILDING INSTALLATION POST-TENSIONING:
1. Jacking Force $0.7f_{pu}A_{ps}$=28.9 kips per Strand.
2. 0.5"ø(As=0.153 in^2) f_{pu}=270 ksi 7-Wire, Low-Relaxation PT-Strand per ASTM A416.

SHEAR KEY AT FLOOR SLAB

1 1/2"=1'-0"

C-10

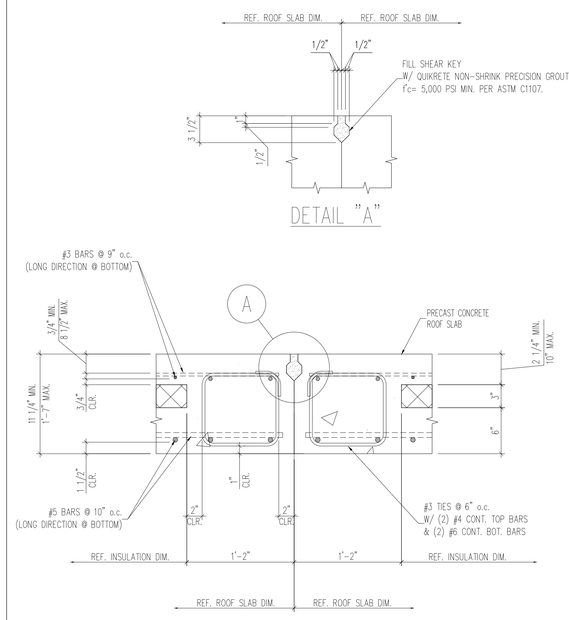

SHEAR KEY AT ROOF SLAB

1 1/2"=1'-0"

C-11

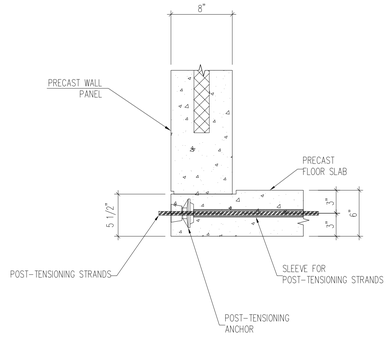

BUILDING INSTALLATION POST-TENSIONING:
1. Jacking Force $0.7f_{pu}A_{ps}$=28.9 kips per Strand.
2. 0.5"ø(As=0.153 in^2) f_{pu}=270 ksi 7-Wire, Low-Relaxation PT-Strand per ASTM A416.

POST-TENSIONING AT FLOOR SLAB

1 1/2"=1'-0"

C-12

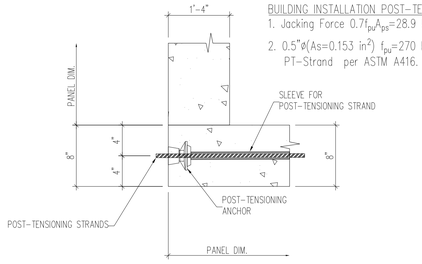

PLAN VIEW AT BUILDING CORNER

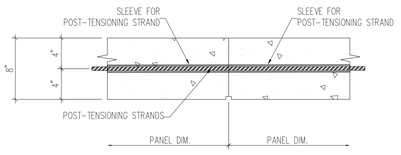

PLAN VIEW AT MIDDLE OF THE BUILDING

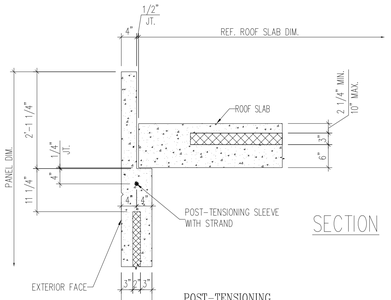

SECTION

POST-TENSIONING AT WALL PANELS

1 1/2"=1'-0"

C-13

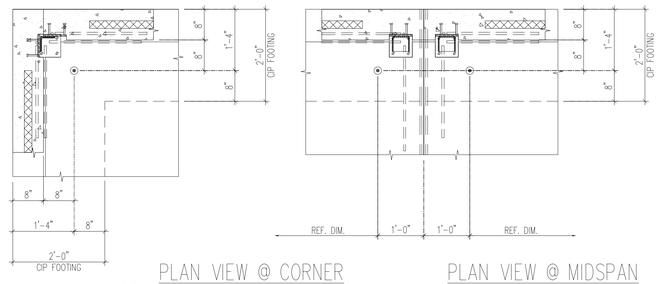

PLAN VIEW @ CORNER

PLAN VIEW @ MIDSPAN

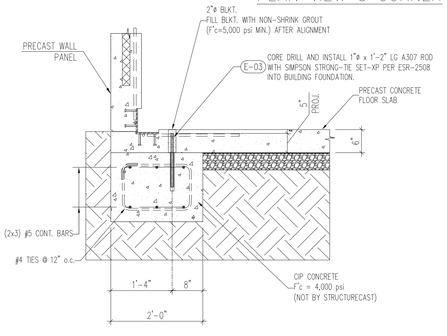

SECTION

MK. NO.	DESCRIPTION	QTY.
E-03	1"ø x 1'-2" LG ALLTHREAD A307 ROD	ONE

1 1/2"=1'-0"

C-14

FOR BID ONLY

Teter, LLP expressly reserves its common law copyright and other property rights in these plans. They are not to be changed or copied in any form or manner whatsoever, nor are they to be assigned to any third party, without first obtaining the express written authorization of Teter, LLP.

MARK	DATE	DESCRIPTION
	11/1/22	DSA BACKCHECK

REGISTERED PROFESSIONAL ENGINEER JONATHAN MARK SHEER No. S-5413 Exp. 5-31-2023 STRUCTURAL STATE OF CALIFORNIA

TETER, LLP
FRESNO HEADQUARTERS
VISALIA | BAKERSFIELD | MODESTO | SAN LUIS OBISPO
ARCHITECTS ENGINEERS CONNECTED

TULARE CAMPUS CTE
COLLEGE OF THE SEQUOIAS
4999 E. BARDSLEY AVE.
TULARE, CA

DRAWING TITLE
CONNECTION DETAILS - FIRE PUMP HOUSE

PROJECT NO.
21-12032

DRAWING
A-3.2

POST-TENSIONING COMPONENTS

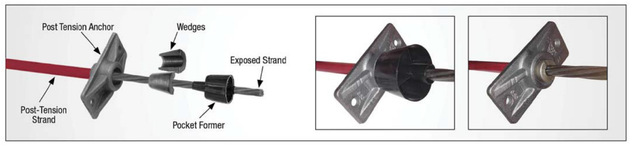

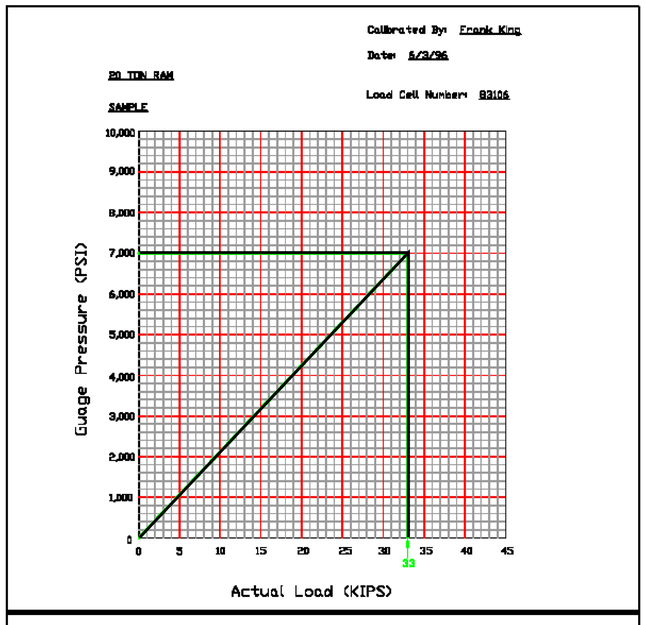

NOTE:
The charts are provided as samples only and that the views may differ from your actual machinery. Always refer to your manufacturer's operation manual and the certified calibration chart provided at time of certification. Tension machinery should be calibrated at least once per year by authorized and certified testing companies and pressure charts updated. Follow all recommended safety instructions and procedures during the operation of tensioning machinery.

5.0 Building Production

5.10 STRESSING PROCEDURES For Roofs.

1. Remove form rails. Verify concrete strength with Schmidt Hammer or cylinder breaks. Concrete shall be a minimum of 3,500 PSI before cable can be stressed.
2. Remove recessed plastic pocket-formers at the post-tensioning anchor.
3. Remove the plastic sheath from the strand all the way from the base of the anchor to the end of the strand. Clean off grease from exposed portion of cable. Use a suitable solvent. Never heat or use flame on the cable.
4. Insure that the tapered holes in the anchors are cleaned and free of any debris or cement paste, which might interfere with proper wedge seating.
5. Install wedge sets around the strand at each anchor. Press the wedges in with the fingers evenly. Tap wedges in securely. Make sure the ends of the wedges are even with each other so that the stress will be evenly distributed over the wires of the strand.
6. Slide the wedge-setter over the cable and place against the wedges installed in the cast-in anchors.
7. Install the temporary reusable anchor on the strand. The plates of the jack will push against this anchor to elongate and, therefore, stress the strand. Set the temporary stressing anchor approximately 5" beyond the rear of the wedge-setter.
8. Install the plates of the twin ram stressing jack over the strand between the wedge-setter and the reusable stressing anchor.
9. Standing back from the jack, using a remote switch for the pump, stress the strands until the pump pressure gauge indicates a pressure listed on the calibration chart of your stressing pump, that corresponds to 33 K required tension on the ½" cable. Whenever stressing be sure to observe safety precautions and operator positioning in anticipation of unexpected failures. NOTE: As a double-check to insure proper elongation of the strand, measure the distance the jack has stretched the cable. This dimension should be in accordance with the following formula:
Length of total cable x .0795 = the length of cable elongation.
10. Release pump pressure slowly and remove the jacking system and temporary stressing anchor. Your post release tension on the cable will be 28.5 K.
11. Repeat stressing operation at other end of cable. To insure that cable is fully tensioned. Line friction may result in lower stress of total length of cable if this procedure is not done.
12. Release pump pressure slowly and remove jack system and temporary anchor.
13. Cut off strand tails at 1" from the wedge and pack the holes with permanent grout.

SAFETY INSTRUCTIONS:
NOTE: Stressing units are calibrated against load cells to determine the gauge pressures for a particular unit which will produce the desired engineering force. Gauge pressure versus actual load calibration should be checked every six months against a load cell. The sample table lists the current equipment in service. Never use equipment which has not been tested in the last 6 months. The Quality Control Department has the responsibility to insure the stressing unit is calibrated semi-annually. See the following sample calibration chart. The calibration chart of your stressing jack is likely to vary from the sample table
ROOF AND FLOOR POST-TENSIONING Stressing System Safety Instructions
This equipment is designed and built to provide safety during equipment operation. It must be operated and maintained by personnel who are trained in and follow safe procedures. Since the forces involved in tendon stressing are in the order of 33 to 46 kips, it is obvious that failure from any cause could be damaging to personnel and property. Accordingly, stressing equipment operators are expected to observe all applicable safety precautions including the following:
1. Before activating the pump, visually check all elastomeric tubing for nicks, cracks, or other damage and repair or replace if required.
2. See that all tubing joints are tightly connected.
3. Be sure that pump is supported in a stable manner and positioned to avoid strain on connection lines.
4. Be sure that protective dunnage and appropriate safety barriers are erected to protect the operator and any others in the area.
5. Observe the gauge pressure that will develop the required tensile force as marked on the tag attached to the pump. Locate this reading on gauge face.
6. Be certain that tensioning twin-rams are positively engaged and correctly aligned.
7. Activate pump and observe gauge. If pressure does not build up promptly, check system for leakage and make sure that anchors and wedges on both ends of the POLYSTRAND® tendons are properly engaged. When pressure reaches approximately 1000 PSI, stop and check for alignment. Make sure that the strand is at the top of the slot provided in the tension jack cylinder connector plates.
8. Continue pumping until final pressure is attained. When stressing long tendons, multiple strokes and resetting the temporary anchor will be required. – – CAUTION – – pressure will build extremely fast if rams are fully extended. Monitor ram extension and gauge readings continuously.
9. When the correct force has been applied to the tendon, stop the pump motor and release the pressure on the pack by opening the hydraulic valve.
10. Use care in moving and storing equipment to insure that gauge and tubing are not damaged.
11. Observe site rules pertaining to frequency of gauge calibration.

FOR BID ONLY

Teter, LLP expressly reserves its common law copyright and other property rights in these plans. These documents, the ideas and designs incorporated herein, as an instrument of professional service, shall not be used in whole or in part, for any other project without prior written authorization.

MARK	DATE	DESCRIPTION
	11/1/22	DSA BACKCHECK

REGISTERED PROFESSIONAL ENGINEER JONATHAN MARK [illegible] Exp. 5-31-2023 STRUCTURAL STATE OF CALIFORNIA

TETER, LLP
FRESNO HEADQUARTERS
VISALIA | BAKERSFIELD | MODESTO | SAN LUIS OBISPO
ARCHITECTS ENGINEERS CONNECTED

TETER

TULARE CAMPUS CTE
COLLEGE OF THE SEQUOIAS
4999 E. BARDSLEY AVE.
TULARE, CA

DRAWING TITLE
POST-TENSIONING INSTRUCTION- FIRE PUMP HOUSE

PROJECT NO.
21-12032

DRAWING
A-4.1

FOUNDATION REQUIREMENTS FOR EASI-SET TRANSPORTABLE PRECAST CONCRETE BUILDINGS

BUILDING DESIGN
EASI-SET TRANSPORTABLE PRECAST CONCRETE BUILDINGS HAVE BEEN DESIGNED TO ELIMINATE THE NEED FOR FOUNDATIONS OR FOOTINGS FOR VIRTUALLY ALL INSTALLATIONS. THE BUILT-IN FLOOR OF THE EASI-SET BUILDINGS IS DESIGNED FOR USE ON FLOATING FOUNDATIONS COMPRISED OF 4" COMPACTED 3/8"-GRAVEL BASE. THIS DESIGN, AND THE USE OF APPROPRIATE FLOATING FOUNDATIONS OF STONE OR SAND, HAVE PROVEN TO BE EFFECTIVE AND PROBLEM FREE IN THE FIELD FOR A WIDE VARIETY OF INSTALLATIONS. THE EFFECTIVENESS OF THE DESIGN HAS NOT BEEN ADVERSELY AFFECTED BY THE SIZE OF THE EASI-SET BUILDING.

CAVEATS
THE FLOATING FOUNDATION OF CRUSHED STONE OR SAND SHOULD BE PLACED ON A WELL-DRAINED AND GRADED AREA, TO PRECLUDE THE RETENTION OF STANDING WATER. ON A WELL-DRAINED AND PROPERLY GRADED SITE, ANY GROUND SWELL SHOULD BE MINIMAL AND LINEAR, WITH NO DAMAGE TO THE EASI-SET BUILDING OR ITS CONTENTS.

IT IS IMPORTANT TO NOTE THAT THE DESIGN OF AN EASI-SET BUILDING ENABLES THE TRANSPORTATION OF THE BUILDING, WHICH MAXIMIZES THE FLEXIBILITY AND LONG-TERM USEFULNESS OF THE STRUCTURE. FURTHERMORE, THE ELIMINATION OF FOUNDATIONS AND FOOTINGS MINIMIZES THE IMPACT ON, AND DAMAGE TO, THE ENVIRONMENT OF THE BUILDING SITE. THE USE OF STANDARD FOUNDATIONS OR FOOTINGS WOULD COUNTER SOME OF THE SIGNIFICANT BENEFITS, WHICH CAN BE ACHIEVED BY INSTALLING EASI-SET BUILDINGS. IN THOSE AREAS WHERE LOCAL BUILDING CODES MAY NOT ACCOMMODATE THE USE OF A FLOATING FOUNDATION FOR AN EASI-SET BUILDING, A VARIANCE TO SUCH CODES MAY BE AVAILABLE.

SITE PREPARATION REQUIREMENTS
(PER GEOTECHNICAL REPORT)

A. EASI-SET BUILDING SHALL BEAR FULLY ON A CRUSHED STONE BASE THAT IS AT LEAST TWO FEET LARGER THAN THE LENGTH AND WIDTH OF BUILDING.

B. STONE SHALL BE A MINIMUM OF 4" THICK OR DOWN TO FIRM SUBGRADE. THE VERTICAL SOIL CAPACITY UNDER STONE SHALL BE COMPACTED TO HAVE MINIMUM BEARING OF 1,500 POUNDS PER SQUARE FOOT. STONE SHALL BE 3/8" OR SMALLER AND MUST BE SCREEDED LEVEL WITHIN ¼" IN BOTH DIRECTIONS. STONE SHALL BE PLACED WITHIN A PERIMETER FORM WITH FLAT AND LEVEL TOP EDGE FOR SCREEDING. FORMING MATERIAL SHALL REMAIN AROUND STONE UNTIL AFTER THE BUILDING IS SET.

C. THE CRUSHED STONE BASE SHALL BE KEPT WITHIN THE CONFINES OF THE SOIL OR PERIMETER FORM. DO NOT ALLOW THE BASE TO BECOME UNCONFINED SO THAT IT MAY WASH, ERODE, OR OTHERWISE BE UNDERMINED.
OR
IF BUILDING IS PLACED ON PAVEMENT OR A CONCRETE SLAB, SUBSTRATE BELOW PAVEMENT OR SLAB MUST HAVE A VERTICAL SOIL CAPACITY OF 1,500 POUNDS PER SQUARE FOOT. PLACE STONE OR SAND TO 1" ABOVE HIGHEST POINT OF AREA WHERE BUILDING WILL BE PLACED AND AT LEAST 1'-0" WIDE ALL AROUND THE BUILDING FOOTPRINT. RETAIN STONE OR SAND WITH A PERIMETER FORM TO PREVENT THE MATERIAL FROM WASHING OUT.

D. PROVIDE POSITIVE DRAINAGE FOR THE FILL, PAD, OR SLAB AS REQUIRED.

ACCESS

A. CONTRACTOR MUST PROVIDE LEVEL UNOBSTRUCTED AREA LARGE ENOUGH FOR A CRANE AND A TRACTOR-TRAILER TO PARK ADJACENT TO THE PAD. CRANE MUST BE ABLE TO PLACE OUTRIGGERS WITHIN 5'-0" OF EDGE OF PAD AND TRUCK AND CRANE MUST BE ABLE TO GET SIDE BY SIDE UNDER THEIR OWN POWER. NO OVERHEAD LINES MAY BE WITHIN 75' RADIUS OF CENTER OF PAD. A MINIMUM OF 24" CLEARANCE IS REQUIRED BETWEEN THIS BUILDING AND ADJACENT BUILDINGS.

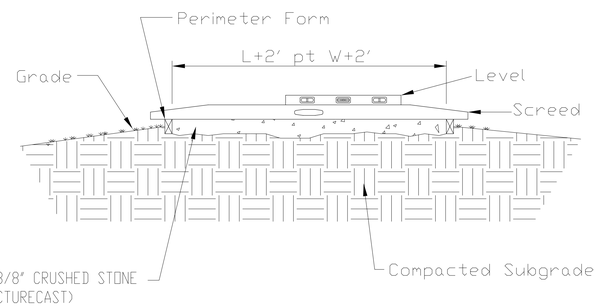

SITE PREPARATION

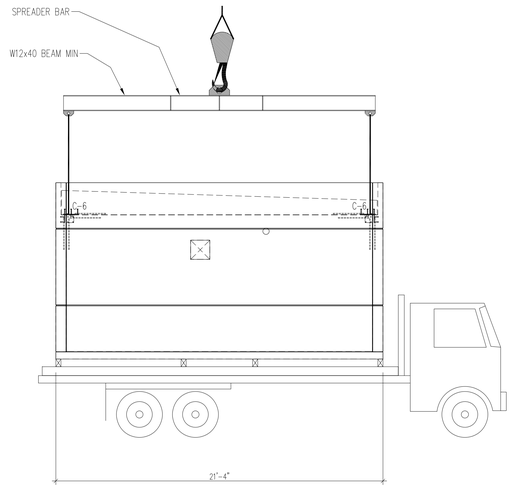

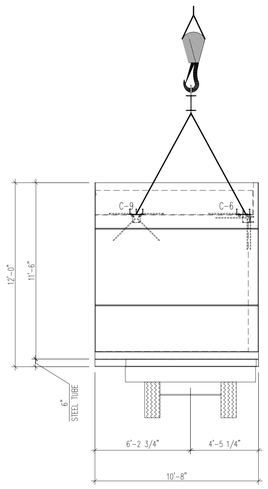

NOTE:
FOR LIFTING SEE DETAILS
"C-06/A-3.1" & "C-09/A-3.2"

Building #1	Weight
FLOOR SLAB	16,800 Lbs.
W1.01 WALL	9,300 Lbs.
W1.02 WALL	16,700 Lbs.
W1.03 WALL	9,250 Lbs.
ROOF SLAB	34,600 Lbs.
MISC	350 Lbs.
Total Bldg.	87,000 Lbs.

BUILDING #1 SHIPPING & HANDLING

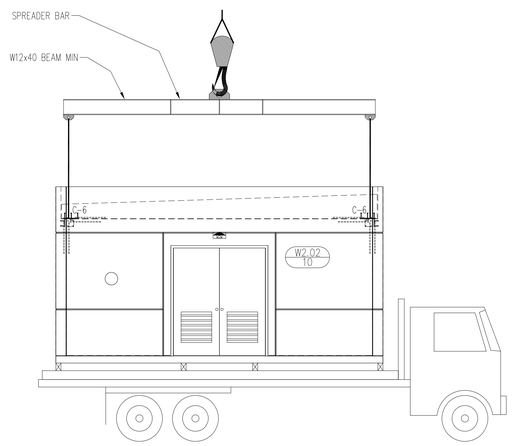

OPTIONAL CABLE RIG

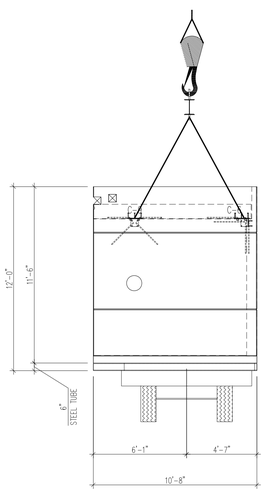

Building #2	Weight
FLOOR SLAB	16,800 Lbs.
W2.01 WALL	9,300 Lbs.
W2.02 WALL	13,850 Lbs.
W2.03 WALL	9,200 Lbs.
ROOF SLAB	34,650 Lbs.
MISC	600 Lbs.
Total Bldg.	84,400 Lbs.

BUILDING #2 SHIPPING & HANDLING

FOR BID ONLY

Teter, LLP expressly reserves its common law copyright and other property rights in these plans. The content, the ideas and designs incorporated herein, as an instrument of professional service, is not to be used in whole or in part, for any other project without prior written authorization.

MARK	DATE	DESCRIPTION
	11/1/22	DSA BACKCHECK

REGISTERED PROFESSIONAL ENGINEER
JONATHAN MARK [illegible]
No. S-5[illegible]
Exp. 5-31-2023
STRUCTURAL
STATE OF CALIFORNIA

TETER, LLP
ARCHITECTS ENGINEERS CONNECTED
FRESNO HEADQUARTERS
VISALIA | BAKERSFIELD | MODESTO | SAN LUIS OBISPO

TETER

TULARE CAMPUS CTE
COLLEGE OF THE SEQUOIAS
4999 E. BARDSLEY AVE.
TULARE, CA

DRAWING TITLE
SITE PREPARATION, BUILDING SHIPPING & HANDLING - FIRE PUMP HOUSE

PROJECT NO.
21-12032

DRAWING
A-5.1

FABRIC SHADE STRUCTURE

DSA P.C. 04-119454

THESE PLANS AND SPECIFICATIONS ARE THE PROPERTY OF USA SHADE AND FABRIC STRUCTURES AND SHALL NOT BE REPRODUCED WITHOUT THEIR WRITTEN

CORPORATE HEADQUARTERS
2580 ESTERS BLVD. SUITE 100
DFW AIRPORT, TX, 75261
800-966-5005

CERTIFICATIONS:

IAS CERTIFICATION No: FA-428

CLARK COUNTY MANUFACTURER CERTIFICATION NUMBER (NEVADA): 355

CUSTOMER:

College of the Sequoias

PROJECT NAME:

Tulare Campus

LOCATION:

4999 E. Bardsley Ave
Tulare, CA 93274

MODEL NUMBER:

APPROVED
DIV. OF THE STATE ARCHITECT
APP: 04-119454 PC
REVIEWED FOR
SS ☑ FLS ☑ ACS ☒ CG ☐
DATE: 03/26/2021

STRUCTURE TYPE:

SCALE : VARIES

DRAWING SIZE: D

PRE-CHECK (PC) DOCUMENT
Code : 2019 CBC
A separate project application for construction is required.

Eng. By :	**DWH**	**10/16/20**
Design By :	**DWH**	**10/16/20**
Approved By :	**DWH**	**10/16/20**

DRAWING DESCRIPTION:

P.C. TITLE SHEET

DWG.

SHEET

P.C. T-1.0

REV.

BUILDING CODE DATA

SITE SPECIFIC APPLICATION TITLE SHEET SHALL INCLUDE:

PARTIAL LIST OF APPLICABLE CODES

- 2019 CALIFORNIA ADMINISTRATIVE CODE (CAC), PART 1, TITLE 24 C.C.R.
- 2019 CALIFORNIA BUILDING CODE (CBC), PART 2, TITLE 24 C.C.R. (2018 INTERNATIONAL BUILDING CODE VOLUMES 1-2 AND 2019 CALIFORNIA AMENDMENTS)
- 2019 CALIFORNIA ELECTRICAL CODE (CEC) , PART 3, TITLE 24 C.C.R. (2017 NATIONAL ELECTRICAL CODE AND 2019 CALIFORNIA AMENDMENTS)
- 2019 CALIFORNIA MECHANICAL CODE (CMC), PART 4, TITLE 24 C.C.R. (2018 IAPMO UNIFORM MECHANICAL CODE AND 2019 CALIFORNIA AMENDMENTS)
- 2019 CALIFORNIA PLUMBING CODE (CPC), PART 5, TITLE 24 C.C.R. (2018 IAPMO UNIFORM PLUMBING CODE AND 2019 CALIFORNIA AMENDMENTS)
- 2019 CALIFORNIA ENERGY CODE (CEC), PART 6, TITLE 24 C.C.R.
- 2019 CALIFORNIA FIRE CODE, PART 9, TITLE 24 C.C.R. (2018 INTERNATIONAL FIRE CODE AND 2019 CALIFORNIA AMENDMENTS)
- 2019 CALIFORNIA EXISTING BUILDING CODE (CEBC), PART 10, TITLE 24 C.C.R. (2018 INTERNATIONAL EXISTING BUILDING CODE AND 2019 CALIFORNIA AMENDMENTS)
- 2019 CALIFORNIA GREEN BUILDING STANDARDS CODE (CALGREEN), PART 11, TITLE 24 C.C.R.
- 2019 CALIFORNIA REFERENCED STANDARDS CODE, PART 12, TITLE 24 C.C.R.
- TITLE 19 C.C.R., PUBLIC SAFETY, STATE FIRE MARSHAL REGULATIONS
- 2016 ASME A17.1/CSA B44-13 SAFETY CODE FOR ELEVATORS AND ESCALATORS (PER 2019 CBC, PART 2, CHAPTER 35)

NOTE: CALOSHA ELEVATOR UNIT ENFORCES C.C.R. TITLE 8 AND USES THE 2004 ASME A17.1 BY ADOPTION

PARTIAL LIST OF APPLICABLE STANDARDS

NFPA 13	STANDARD FOR THE INSTALLATION OF SPRINKLER SYSTEMS (CA AMENDED)	2016 EDITION
NFPA 14	STANDARD FOR THE INSTALLATION OF STANDPIPE AND HOSE SYSTEMS	2016 EDITION
NFPA 17	STANDARD FOR DRY CHEMICAL EXTINGUISHING SYSTEMS	2017 EDITION
NFPA 17A	STANDARD FOR WET CHEMICAL EXTINGUISHING SYSTEMS	2017 EDITION
NFPA 20	STANDARD FOR THE INSTALLATION OF STATIONARY PUMPS FOR FIRE PROTECTION	2016 EDITION
NFPA 22	STANDARD FOR WATER TANKS FOR PRIVATE FIRE PROTECTION	2013 EDITION
NFPA 24	STANDARD FOR THE INSTALLATION OF PRIVATE FIRE SERVICE MAINS AND THEIR APPURTENANCES	2016 EDITION
NFPA 72	NATIONAL FIRE ALARM & SIGNALING CODE (CA AMENDED)	2016 EDITION
NFPA 80	STANDARD FOR FIRE DOORS AND OTHER OPENING PROTECTIVES	2016 EDITION
NFPA 2001	STANDARD ON CLEAN AGENT FIRE EXTINGUISHING SYSTEMS	2015 EDITION
UL 300	STANDARD FOR FIRE TESTING OF FIRE EXTINGUISHING SYSTEMS FOR PROTECTION OF COMMERCIAL COOKING EQUIPMENT	2005 (R2010)
UL 464	AUDIBLE SIGNALING DEVICES FOR FIRE ALARM AND SIGNALING SYSTEMS, INCLUDING ACCESSORIES	2003 EDITION
UL521	STANDARD FOR HEAT DETECTORS FOR FIRE PROTECTIVE SIGNALING SYSTEMS	1999 EDITION
UL 1971	STANDARD FOR SIGNALING DEVICES FOR THE HEARING IMPAIRED	2002 (R2010)
ICC 300	SANDARD FOR BLEACHERS, FOLDING AND TELESCOPIC SEATING AND GRANDSTANDS	2017 EDITION

FOR A COMPLETE LIST OF APPLICABLE NFPA STANDARDS REFER TO 2019 CBC (SFM) CHAPTER 35 AND CALIFORNIA FIRE CODE CHAPTER 80.

SEE CALIFORNIA BUILDING CODE, CHAPTER 35, FOR STATE OF CALIFORNIA AMENDMENTS TO THE NFPA STANDARDS.

SEE INDIVIDUAL STRUCTURAL DRAWINGS FOR SPECIFIC DESIGN NOTES AND LOADING.

ALL WORK SHALL CONFORM TO 2019 EDITION TITLE 24, CALIFORNIA CODE OF REGULATIONS (C.C.R.).

ALL WORK SHALL BE IN COMPLIANCE WITH CFC CHAPTER 33 - FIRE SAFETY DURING CONSTRUCTION AND DEMOLITION.

GENERAL NOTES

SITE SPECIFIC APPLICATION SITE PLAN SHALL INCLUDE:

1. ACTUAL DIMENSIONS OF SHADE STRUCTURES.
2. DIMENSIONS FROM ADJACENT STRUCTURES AND PROXIMITY OF ASSUMED OR ACTUAL PROPERTY LINES.
3. PROVIDE CODE ANALYSIS INCLUDING ACTUAL SHADE STRUCTURE AREA (SQ. FT.), OCCUPANCY TYPE (A-3), AND TYPE OF CONSTRUCTION (V-B). INDICATE OCCUPANT LOAD FACTOR per 2019 CBC, SECTION 1004.
4. INDICATE LOCATIONS OF FIRE EXTINGUISHER WITHIN 75 FEET.
5. SHOW LOCATIONS OF AUDIBLE FIRE ALARM.
6. INDICATE DIMENSIONS FROM THE ROOF TO THE HIGHER STRUCTURE OR TERRAIN FEATURE. MINIMUM DIMENSION OF 20' FOR SNOW LOAD MODEL (ASCE 7-16).
7. ACTUAL SITE ELEVATION (FT.) TO DETERMINE SITE OCCURS AT OR BELOW THE UPPER ELEVATION LIMIT FOR THE GROUND SNOW LOAD SHOWN IN ASCE 7-16 (FOR SNOW LOAD MODEL).
8. FOR RECESSED BASE PLATE (RBP) OPTION: ARCHITECT/ENGINEER OF RECORD TO SPECIFY THE LOWEST ANTICIPATED SERVICE TEMPERATURE (LAST), AS DEFINED IN AISC 341-10 SECTION A.3.4b, A4.1 AND A4.2 PER NOTE ON EACH INDIVIDUAL MODEL ENGINEERING DRAWING WHICH RELATES TO DEMAND CRITICAL WELD AND "L.A.S.T." TEMPERATURE (EITHER STRUCTURAL STEEL NOTE #14).
9. COMPLETE SCOPE OF WORK INCLUDING THE SHADE STRUCTURE MODEL NUMBER, P.C. NUMBER, AND SPECIFIC SIZE OF SHADE STRUCTURE.
10. ALL SADDLES, CLAMPS AND FITTINGS SHALL CONFORM TO THE GUIDELINES AS SPECIFIED IN APPENDICES "A, B & C" RESPECTIVELY IN ASCE 19-16, "STRUCTURAL APPLICATIONS OF STEEL CABLES FOR BUILDINGS."
11. ARCHITECTS OF RECORD TO DETERMINE IF SPECIFIC SITE IS IN MAPPED GEOLOGIC HAZARD ZONE. GEOHAZARD REPORT REQUIREMENTS PER DSA IR A-4.
12. ARCHITECTS OF RECORD TO DETERMINE IF SPECIFIC SITE IS IN A MAPPED FIRE HAZARD SEVERITY ZONE OR WILDLAND INTERFACE AREA.

UNIT SELECTION AND DESCRIPTION

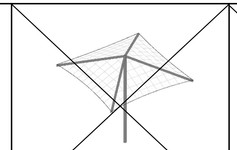

MODEL: DSA1032020-19
STRUCTURE: 20' x 20' x 12' SINGLE POST PYRAMID UNIT
MAX. AREA - 400 SQ. FT.
MAX. OCCUPANCY = 26

MODEL: DSA1241414-19
STRUCTURE: 14' x 14' x 12' SINGLE POST PYRAMID CANTILEVER
MAX. AREA - 196 SQ. FT.
MAX. OCCUPANCY = 13

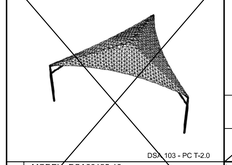

MODEL: DSA30125-19
STRUCTURE: TRIANGLE
MAX. AREA - 271 SQ. FT.
MAX. OCCUPANCY = 18

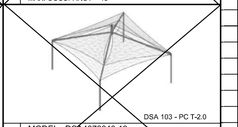

MODEL: DSA4073040-19
STRUCTURE: 30' x 40' x 14' MARINER PEAK
MAX. AREA - 1200 SQ. FT.
MAX. OCCUPANCY = 80

MODEL: DSA4073040-19
STRUCTURE: 30' x 40' x 18' MARINER PEAK
MAX. AREA - 1200 SQ. FT.
MAX. OCCUPANCY = 80

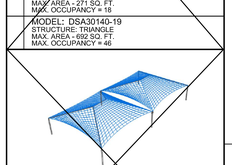

MODEL: DSA30140-19
STRUCTURE: TRIANGLE
MAX. AREA - 692 SQ. FT.
MAX. OCCUPANCY = 46

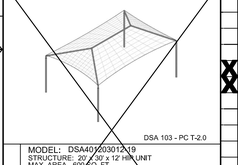

MODEL: DSA4020312-19
STRUCTURE: 20' X 30' x 12' HIP UNIT
MAX. AREA - 600 SQ. FT.
MAX. OCCUPANCY = 40

MODEL: DSA401J-19
STRUCTURE: JOINED HIP
MAX. AREA - VARIES
MAX. OCCUPANCY = VARIES

SEE SHEET 24.1-1000 FOR SELECTION OPTIONS

NUMBER OF UNITS JOINED IS GOVERNED BY TOTAL AREA, OCCUPANCY AND SITE CONDITIONS.

MODEL: DSA401303012-19
STRUCTURE: 30' x 30' x 12' HIP UNIT
MAX. AREA - 900 SQ. FT.
MAX. OCCUPANCY = 60

MODEL: DSA4013040-19
STRUCTURE: 30' x 40' x12' HIP UNIT
MAX. AREA - 1200 SQ. FT.
MAX. OCCUPANCY = 80

MODEL: DSA4014040-19
STRUCTURE: 40' x 40' x 15' HIP UNIT
MAX. AREA - 1600 SQ. FT.
MAX. OCCUPANCY = 106

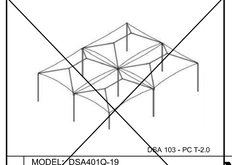

MODEL: DSA401Q-19
STRUCTURE: QUAD JOINED HIP
MAX. AREA - VARIES
MAX. OCCUPANCY = VARIES

SEE SHEET 25.1-1000 FOR SELECTION OPTIONS

NUMBER OF UNITS JOINED IS GOVERNED BY TOTAL AREA, OCCUPANCY AND SITE CONDITIONS.

X MODEL: DSA60340-19
STRUCTURE: 40' Ø HEXAGON
MAX. AREA - 1,040 SQ. FT.
MAX. OCCUPANCY = 69

MODEL: DSA60360-19
STRUCTURE: 60' Ø HEXAGON
MAX. AREA - 2,355 SQ. FT.
MAX. OCCUPANCY = 156

	DRAWING NUMBER	DRAWING DESCRIPTION	STRUCTURE TYPE	MAX SIZE	MODEL NUMBER
X	P.C. T-1.0	P.C. TITLE SHEET			
X	P.C. T-2.0	DSA 103 SAMPLE FORM			
X	P.C. T-2.1	DSA 103 SAMPLE FORM			
	P.C. T-3.0	DSA 103 SAMPLE FORM			
	P.C. T-3.1	DSA 103 SAMPLE FORM			
	16.1-1000	PRODUCT INFORMATION	SINGLE POST PYRAMID	20 X 20	DSA1032020-19
	16.2-2000	REACTIONS	SINGLE POST PYRAMID	20 X 20	DSA1032020-19
	17.1-1000	PRODUCT INFORMATION	SINGLE POST PYRAMID CANTILEVER	14 X 14	DSA1241414-19
	17.2-2000	REACTIONS	SINGLE POST PYRAMID CANTILEVER	14 X 14	DSA1241414-19
	18.1-1000	PRODUCT INFORMATION	TRIANGLE	25 X 25	DSA30125-19
	18.2-2000	REACTIONS	TRIANGLE	25 X 25	DSA30125-19
	19.1-1000	PRODUCT INFORMATION	TRIANGLE	40 X 40	DSA30140-19
	19.2-2000	REACTIONS	TRIANGLE	40 X 40	DSA30140-19
	20.1-1000	PRODUCT INFORMATION	HIP	20 X 30	DSA401203012-19
	20.2-2000	REACTIONS	HIP	20 X 30	DSA401203012-19
	21.1-1000	PRODUCT INFORMATION	HIP	30 X 30	DSA401303012-19
	21.2-2000	REACTIONS	HIP	30 X 30	DSA401303012-19
	22.1-1000	PRODUCT INFORMATION	HIP	30 X 40	DSA401304012-19
	22.2-2000	REACTIONS	HIP	30 X 40	DSA401304012-19
	23.1-1000	PRODUCT INFORMATION	HIP	40 X 40	DSA4014040-19
	23.2-2000	REACTIONS	HIP	40 X 40	DSA4014040-19
	24.1-1000	PRODUCT INFORMATION	JOINED HIPS	VARIES	DSA401J-19
	24.2-1001	DETAILS	JOINED HIPS	VARIES	DSA401J-19
	24.3-2000	REACTIONS	JOINED HIPS	VARIES	DSA401J-19
	25.1-1000	PRODUCT INFORMATION	QUAD JOINED HIPS	VARIES	DSA401Q-19
	25.2-1001	DETAILS	QUAD JOINED HIPS	VARIES	DSA401Q-19
	25.3-2000	REACTIONS	QUAD JOINED HIPS	VARIES	DSA401Q-19
X	26.1-1000	PRODUCT INFORMATION	HEXAGON	40 Ø	DSA60340-19
X	26.2-2000	REACTIONS	HEXAGON	40 Ø	DSA60340-19
	27.1-1000	PRODUCT INFORMATION	HEXAGON	60 Ø	DSA60360-19
	27.2-2000	REACTIONS	HEXAGON	60 Ø	DSA60360-19
	28.1-1000	PRODUCT INFORMATION	MARINER PEAK	30 X 40	DSA4073040-19
	28.2-2000	REACTIONS	MARINER PEAK	30 X 40	DSA4073040-19

TOTAL SHEET COUNT: 33 SHEETS

ARCHITECT

DAVID HIGGINSON, AIA, ARCHITECT
38868 BUTTERFLY DRIVE
YUCAIPA, CA 92399
(909) 499-0058
dhigginson.arch@gmail.com

LICENSED ARCHITECT DAVID HIGGINSON NO.C19788 REN. 10-31-21 STATE OF CALIFORNIA

ENGINEER

MARK LOWE, STRUCTURAL ENGINEER
19471 MISTY RIDGE LANE
TRABUCO CANYON, CA 92367
PH. 949-400-1265
malowe@me.com

REGISTERED PROFESSIONAL ENGINEER MARK ALBERT LOWE No. 3693 STRUCTURAL STATE OF CALIFORNIA

DSA 103-19: LISTING OF STRUCTURAL TESTS & SPECIAL INSPECTIONS, 2019 CBC

Application Number: 04-119454 | **School Name:** TO BE DETERMINED | **School District:** USA SHADE
DSA File Number: | **Increment Number:** | **Date Created:** 2021-03-26 08:15:52

2019 CBC

IMPORTANT: This form is only a summary list of structural tests and some of the special inspections required for the project. Generally, the structural tests and special inspections noted on this form are those that will be performed by the Geotechnical Engineer of Record, Laboratory of Record, or Special Inspector. The actual complete test and inspection program must be performed as detailed on the DSA approved documents. The appendix at the bottom of this form identifies work NOT subject to DSA requirements for special inspection or structural testing. The project inspector is responsible for providing inspection of all facets of construction, including but not limited to, special inspections not listed on this form such as structural wood framing, high-load wood diaphragms, cold-formed steel framing, anchorage of non-structural components, etc., per Title 24, Part 2, Chapter 17A (2019 CBC).

****NOTE:** Undefined section and table references found in this document are from the CBC, or California Building Code.

KEY TO COLUMNS

1. TYPE	2. PERFORMED BY
Continuous – Indicates that a continuous special inspection is required	**GE** – Indicates that the special inspection shall be performed by a registered geotechnical engineer or his or her authorized representative.
Periodic – Indicates that a periodic special inspection is required	**LOR** – Indicates that the test or special inspection shall be performed by a testing laboratory accepted in the DSA Laboratory Evaluation and Acceptance (LEA) Program. See CAC Section 4-335.
Test – Indicates that a test is required	**PI** – Indicates that the special inspection may be performed by a project inspector when specifically approved by DSA.
	SI – Indicates that the special inspection shall be performed by an appropriately qualified/approved special inspector.

DSA 103-19: LISTING OF STRUCTURAL TESTS & SPECIAL INSPECTIONS (SOILS), 2019 CBC

Application Number: 04-119454 | **School Name:** TO BE DETERMINED | **School District:** USA SHADE
DSA File Number: | **Increment Number:** | **Date Created:** 2021-03-26 08:15:52

Geotechnical Reports: Project does NOT have and does NOT require a geotechnical report

	1. GENERAL:	Table 1705A.6		
	Test or Special Inspection	**Type**	**Performed By**	**Code References and Notes**
☑	**a.** Verify that: • Site has been prepared properly prior to placement of controlled fill and/or excavations for foundations. • Foundation excavations are extended to proper depth and have reached proper material. • Materials below footings are adequate to achieve the design bearing capacity.	**See Notes**	**PI**	Refer to specific items identified in the Appendix listing exemptions for limitations. Placement of controlled fill exceeding 12" depth under foundations is not permitted without a geotechnical report.

	2. SOIL COMPACTION AND FILL:	Table 1705A.6		
	Test or Special Inspection	**Type**	**Performed By**	**Code References and Notes**
☑	**a.** Verify use of proper materials, densities and inspect lift thicknesses, placement and compaction during placement of fill.	**Continuous**	**LOR***	* Under the supervision of a geotechnical engineer or LOR's engineering manager. Refer to specific items identified in the Appendix listing exemptions for limitations.
☑	**b.** Compaction testing.	**Test**	**LOR***	* Under the supervision of a geotechnical engineer or LOR's engineering manager. Refer to specific items identified in the Appendix listing exemptions for limitations.

	3. DRIVEN DEEP FOUNDATIONS (PILES):	Table 1705A.7

DSA 103-19: LISTING OF STRUCTURAL TESTS & SPECIAL INSPECTIONS (SOILS), 2019 CBC

Application Number: 04-119454 | **School Name:** TO BE DETERMINED | **School District:** USA SHADE
DSA File Number: | **Increment Number:** | **Date Created:** 2021-03-26 08:15:52

	Test or Special Inspection	Type	Performed By	Code References and Notes
☐	**a.** Verify pile materials, sizes and lengths comply with the requirements.	**Continuous**	**GE***	* By geotechnical engineer or his or her qualified representative.
☐	**b.** Determine capacities of test piles and conduct additional load tests as required.	**Test**	**LOR***	* Under the supervision of the geotechnical engineer.
☐	**c.** Inspect driving operations and maintain complete and accurate records for each pile.	**Continuous**	**GE***	* By geotechnical engineer or his or her qualified representative.
☐	**d.** Verify locations of piles and their plumbness, confirm type and size of hammer, record number of blows per foot of penetration, determine required penetrations to achieve design capacity, record tip and butt elevations and record any pile damage.	**Continuous**	**GE***	* By geotechnical engineer or his or her qualified representative.
☐	**e.** Steel piles.	Provide tests and inspections per STEEL section below.		
☐	**f.** Concrete piles and concrete filled piles.	Provide tests and inspections per CONCRETE section below.		
☐	**g.** For specialty piles, perform additional inspections as determined by the registered design professional in responsible charge.	*	*	* As defined on drawings or specifications.

	4. CAST-IN-PLACE DEEP FOUNDATIONS (PIERS):	Table 1705A.8		
	Test or Special Inspection	**Type**	**Performed By**	**Code References and Notes**

DSA 103-19: LISTING OF STRUCTURAL TESTS & SPECIAL INSPECTIONS (SOILS), 2019 CBC

Application Number: 04-119454 | **School Name:** TO BE DETERMINED | **School District:** USA SHADE
DSA File Number: | **Increment Number:** | **Date Created:** 2021-03-26 08:15:52

☑	**a.** Inspect drilling operations and maintain complete and accurate records for each pier.	**Continuous**	**PI**	Continuous inspection to be provided by project inspector. Refer to specific items identified in the Appendix listing exemptions for limitations.
☑	**b.** Verify pier locations, diameters, plumbness and lengths.Record concrete or grout volumes.	**Continuous**	**PI**	Continuous inspection to be provided by project inspector. Refer to specific items identified in the Appendix listing exemptions for limitations.
☑	**c.** Concrete piers.	Provide tests and inspections per CONCRETE section below.		

	5. RETAINING WALLS:			
	Test or Special Inspection	**Type**	**Performed By**	**Code References and Notes**
☐	**a.** Placement, compaction and inspection of backfill.	**Continuous**	**GE***	**1705A.6.1.** * By geotechnical engineer or his or her qualified representative. (See Section 2 above).
☐	**b.** Placement of soil reinforcement and/or drainage devices.	**Continuous**	**GE***	* By geotechnical engineer or his or her qualified representative.
☐	**c.** Segmental retaining walls; inspect placement of units, dowels, connectors, etc.	**Continuous**	**GE***	* By geotechnical engineer or his or her qualified representative. See DSA IR 16-3.
☐	**d.** Concrete retaining walls.	Provide tests and inspections per CONCRETE section below.		
☐	**e.** Masonry retaining walls.	Provide tests and inspections per MASONRY section below.		

	6. OTHER SOILS:			
	Test or Special Inspection	**Type**	**Performed By**	**Code References and Notes**

DSA 103-19: LISTING OF STRUCTURAL TESTS & SPECIAL INSPECTIONS (SOILS), 2019 CBC

Application Number: 04-119454 | **School Name:** TO BE DETERMINED | **School District:** USA SHADE
DSA File Number: | **Increment Number:** | **Date Created:** 2021-03-26 08:15:52

☐	**a.** Soil Improvements	**Test**	**GE***	Submit a comprehensive report documenting final soil improvements constructed, construction observation and the results of the confirmation testing and analysis to CGS for final acceptance. * By geotechnical engineer or his or her qualified representative.
☐	**b.** Inspection of Soil Improvements	**Continuous**	**GE***	* By geotechnical engineer or his or her qualified representative.
☐	**c.**			

DSA 103-19: LISTING OF STRUCTURAL TESTS & SPECIAL INSPECTIONS (Concrete), 2019 CBC

Table 1705A.3; ACI 318-14 Sections 26.12 & 26.13
Application Number: 04-119454 | **School Name:** TO BE DETERMINED | **School District:** USA SHADE
DSA File Number: | **Increment Number:** | **Date Created:** 2021-03-26 08:15:52

	Test or Special Inspection	Type	Performed By	Code References and Notes
☐	**a.** Sample and test prestressing tendons and anchorages.	**Test**	**LOR**	**1705A.3.4, 1910A.3**
☐	**b.** Inspect placement of prestressing tendons.	**Periodic**	**SI**	**1705A.3.4, Table 1705A.3 Items 1 & 9.**
☐	**c.** Verify in-situ concrete strength prior to stressing of post-tensioning tendons.	**Periodic**	**SI**	**Table 1705A.3 Item 11.** Special inspector to verify specified concrete strength test prior to stressing.
☐	**d.** Inspect application of post-tensioning or prestressing forces and grouting of bonded prestressing tendons.	**Continuous**	**SI**	**1705A.3.4, Table 1705A.3 Item 9;** ACI 318-14 Section 26.13

	9. PRECAST CONCRETE (in addition to Cast-in-Place Concrete tests and inspections):			
	Test or Special Inspection	**Type**	**Performed By**	**Code References and Notes**
☐	**a.** Inspect fabrication of precast concrete members.	**Continuous**	**SI**	ACI 318-14 Section 26.13.
☐	**b.** Inspect erection of precast concrete members.	**Periodic**	**SI***	**Table 1705A.3 Item 10.** * May be performed by PI when specifically approved by DSA.

	10. SHOTCRETE (in addition to Cast-in-Place Concrete tests and inspections):			
	Test or Special Inspection	**Type**	**Performed By**	**Code References and Notes**

DSA 103-19: LISTING OF STRUCTURAL TESTS & SPECIAL INSPECTIONS (Concrete), 2019 CBC

Table 1705A.3; ACI 318-14 Sections 26.12 & 26.13
Application Number: 04-119454 | **School Name:** TO BE DETERMINED | **School District:** USA SHADE
DSA File Number: | **Increment Number:** | **Date Created:** 2021-03-26 08:15:52

☐	**a.** Inspect shotcrete placement for proper application techniques.	**Continuous**	**SI**	**1705A.19, Table 1705A.3 Item 7, 1908A.6, 1908A.7, 1908A.8, 1908A.9, 1908A.11, 1908A.12.** See ACI 506.2-13 Section 3.4, ACI 506R-16.
☐	**b.** Sample and test shotcrete (f'c).	**Test**	**LOR**	**1908A.5, 1908A.10.**

	11. POST-INSTALLED ANCHORS:			
	Test or Special Inspection	**Type**	**Performed By**	**Code References and Notes**
☐	**a.** Inspect installation of post-installed anchors	**See Notes**	**SI***	**1617A.1.19, Table 1705A.3 Item 4a (Continuous) & 4b (Periodic), 1705A.3.8** (See Appendix for exemptions). ACI 318-14 Sections 17.8 & 26.13. * May be performed by the project inspector when specifically approved by DSA.
☐	**b.** Test post-installed anchors.	**Test**	**LOR**	**1910A.5.** (See Appendix for exemptions.)

	12. OTHER CONCRETE:			
	Test or Special Inspection	**Type**	**Performed By**	**Code References and Notes**
☐	**a.**			

DSA 103-19: LISTING OF STRUCTURAL TESTS & SPECIAL INSPECTIONS (Steel and Aluminum), 2019 CBC

1705A.2.1, Table 1705A.2.1; AISC 303-16, AISC 341-16, AISC 358-16, AISC 360-16; AISI S100-16
Application Number: 04-119454 | **School Name:** TO BE DETERMINED | **School District:** USA SHADE
DSA File Number: | **Increment Number:** | **Date Created:** 2021-03-26 08:15:52

☐	**b.** Test high-strength bolts, nuts and washers.	**Test**	**LOR**	**Table 1705A.2.1 Item 1c, 2213A.1;** RCSC 2014 Section 7.2; DSA IR 17-8.
	Inspection of High-Strength Bolt Installation:			
☐	**c.** Bearing-type ("snug tight") connections.	**Periodic**	**SI**	**Table 1705A.2.1 Item 2a, 1705A.2.6, 2204A.2**; AISC 360-16 J3.1, J3.2, M2.5 & N5.6; RCSC 2014 Section 9.1; DSA IR 17-9.
☐	**d.** Pretensioned and slip-critical connections.	*	**SI**	**Table 1705A.2.1 Items 2b & 2c, 1705A.2.6, 2204A.2**; AISC 360-16 J3.1, J3.2, M2.5 & N5.6; RCSC 2014 Sections 9.2 & 9.3; DSA IR 17-9. * "Continuous" or "Periodic" depends on the tightening method used.

	19. WELDING:	1705A.2.5, Table 1705A.2.1 Items 4 & 5; AWS D1.1 and AWS D1.8 for structural steel; AWS D1.2 for Aluminum; AWS D1.3 for cold-formed steel; AWS D1.4 for reinforcing steel; DSA IR 17-3 (See Appendix for exemptions.)		
	Verification of Materials, Equipment, Welders, etc.:			
	Test or Special Inspection	**Type**	**Performed By**	**Code References and Notes**
☑	**a.** Verify weld filler material identification markings per AWS designation listed on the DSA-approved documents and the WPS.	**Periodic**	**SI**	DSA IR 17-3.
☑	**b.** Verify weld filler material manufacturer's certificate of compliance.	**Periodic**	**SI**	DSA IR 17-3.
☑	**c.** Verify WPS, welder qualifications and equipment.	**Periodic**	**SI**	DSA IR 17-3.

DSA 103-19: LISTING OF STRUCTURAL TESTS & SPECIAL INSPECTIONS (Concrete), 2019 CBC

Table 1705A.3; ACI 318-14 Sections 26.12 & 26.13
Application Number: 04-119454 | **School Name:** TO BE DETERMINED | **School District:** USA SHADE
DSA File Number: | **Increment Number:** | **Date Created:** 2021-03-26 08:15:52

☐	**a.** Inspect shotcrete placement for proper application techniques.	**Continuous**	**SI**	**1705A.19, Table 1705A.3 Item 7, 1908A.6, 1908A.7, 1908A.8, 1908A.9, 1908A.11, 1908A.12.** See ACI 506.2-13 Section 3.4, ACI 506R-16.
☐	**b.** Sample and test shotcrete (f'c).	**Test**	**LOR**	**1908A.5, 1908A.10.**

	11. POST-INSTALLED ANCHORS:			
	Test or Special Inspection	**Type**	**Performed By**	**Code References and Notes**
☐	**a.** Inspect installation of post-installed anchors	**See Notes**	**SI***	**1617A.1.19, Table 1705A.3 Item 4a (Continuous) & 4b (Periodic), 1705A.3.8** (See Appendix for exemptions). ACI 318-14 Sections 17.8 & 26.13. * May be performed by the project inspector when specifically approved by DSA.
☐	**b.** Test post-installed anchors.	**Test**	**LOR**	**1910A.5.** (See Appendix for exemptions.)

	12. OTHER CONCRETE:			
	Test or Special Inspection	**Type**	**Performed By**	**Code References and Notes**
☐	**a.**			

DSA 103-19: LISTING OF STRUCTURAL TESTS & SPECIAL INSPECTIONS (Steel and Aluminum), 2019 CBC

1705A.2.1, Table 1705A.2.1; AISC 303-16, AISC 341-16, AISC 358-16, AISC 360-16; AISI S100-16
Application Number: 04-119454 | **School Name:** TO BE DETERMINED | **School District:** USA SHADE
DSA File Number: | **Increment Number:** | **Date Created:** 2021-03-26 08:15:52

	19.1 SHOP WELDING:			
	Test or Special Inspection	**Type**	**Performed By**	**Code References and Notes**
☑	**a.** Inspect groove welds, multi-pass fillet welds, single pass fillet welds > 5/16", plug and slot welds.	**Continuous**	**SI**	**Table 1705A.2.1 Items 5a.1–4;** AISC 360-16 (and AISC 341-16 as applicable); DSA IR 17-3.
☑	**b.** Inspect single-pass fillet welds ≤ 5/16", floor and roof deck welds.	**Periodic**	**SI**	**1705A.2.2, Table 1705A.2.1 Items 5a.5 & 5a.6;** AISC 360-16 (and AISC 341-16 as applicable); DSA IR 17-3.
☐	**c.** Inspect welding of stairs and railing systems.	**Periodic**	**SI**	**1705A.2.1**; AISC 360-16 (and AISC 341-16 as applicable); AWS D1.1 & D1.3; DSA IR 17-3.
☐	**d.** Verification of reinforcing steel weldability other than ASTM A706.	**Periodic**	**SI**	**1705A.3.1**; AWS D1.4; DSA IR 17-3. Verify carbon equivalent reported on mill certificates.
☐	**e.** Inspect welding of reinforcing steel.	**Continuous**	**SI**	**Table 1705A.2.1 Item 5b, 1705A.3.1, Table 1705A.3 Item 2, 1903A.8;** AWS D1.4; DSA IR 17-3.

	19.2 FIELD WELDING:			
	Test or Special Inspection	**Type**	**Performed By**	**Code References and Notes**
☐	**a.** Inspect groove welds, multi-pass fillet welds, single pass fillet welds > 5/16", plug and slot welds.	**Continuous**	**SI**	**Table 1705A.2.1 Items 5a.1–4;** AISC 360-16 (AISC 341-16 as applicable); DSA IR 17-3.
☐	**b.** Inspect single-pass fillet welds ≤ 5/16".	**Periodic**	**SI**	**Table 1705A.2.1 Item 5a.5;** AISC 360-16 (AISC 341-16 as applicable), DSA IR 17-3.

DSA 103-19: LISTING OF STRUCTURAL TESTS & SPECIAL INSPECTIONS (SOILS), 2019 CBC

Application Number: 04-119454 | **School Name:** TO BE DETERMINED | **School District:** USA SHADE
DSA File Number: | **Increment Number:** | **Date Created:** 2021-03-26 08:15:52

	Test or Special Inspection	Type	Performed By	Code References and Notes
☐	**a.** Verify pile materials, sizes and lengths comply with the requirements.	**Continuous**	**GE***	* By geotechnical engineer or his or her qualified representative.
☐	**b.** Determine capacities of test piles and conduct additional load tests as required.	**Test**	**LOR***	* Under the supervision of the geotechnical engineer.
☐	**c.** Inspect driving operations and maintain complete and accurate records for each pile.	**Continuous**	**GE***	* By geotechnical engineer or his or her qualified representative.
☐	**d.** Verify locations of piles and their plumbness, confirm type and size of hammer, record number of blows per foot of penetration, determine required penetrations to achieve design capacity, record tip and butt elevations and record any pile damage.	**Continuous**	**GE***	* By geotechnical engineer or his or her qualified representative.
☐	**e.** Steel piles.	Provide tests and inspections per STEEL section below.		
☐	**f.** Concrete piles and concrete filled piles.	Provide tests and inspections per CONCRETE section below.		
☐	**g.** For specialty piles, perform additional inspections as determined by the registered design professional in responsible charge.	*	*	* As defined on drawings or specifications.

	4. CAST-IN-PLACE DEEP FOUNDATIONS (PIERS):	Table 1705A.8		
	Test or Special Inspection	**Type**	**Performed By**	**Code References and Notes**

DSA 103-19: LISTING OF STRUCTURAL TESTS & SPECIAL INSPECTIONS (Concrete), 2019 CBC

Table 1705A.3; ACI 318-14 Sections 26.12 & 26.13
Application Number: 04-119454 | **School Name:** TO BE DETERMINED | **School District:** USA SHADE
DSA File Number: | **Increment Number:** | **Date Created:** 2021-03-26 08:15:52

	Test or Special Inspection	Type	Performed By	Code References and Notes
☐	**a.** Sample and test prestressing tendons and anchorages.	**Test**	**LOR**	**1705A.3.4, 1910A.3**
☐	**b.** Inspect placement of prestressing tendons.	**Periodic**	**SI**	**1705A.3.4, Table 1705A.3 Items 1 & 9.**
☐	**c.** Verify in-situ concrete strength prior to stressing of post-tensioning tendons.	**Periodic**	**SI**	**Table 1705A.3 Item 11.** Special inspector to verify specified concrete strength test prior to stressing.
☐	**d.** Inspect application of post-tensioning or prestressing forces and grouting of bonded prestressing tendons.	**Continuous**	**SI**	**1705A.3.4, Table 1705A.3 Item 9;** ACI 318-14 Section 26.13

	9. PRECAST CONCRETE (in addition to Cast-in-Place Concrete tests and inspections):			
	Test or Special Inspection	**Type**	**Performed By**	**Code References and Notes**
☐	**a.** Inspect fabrication of precast concrete members.	**Continuous**	**SI**	ACI 318-14 Section 26.13.
☐	**b.** Inspect erection of precast concrete members.	**Periodic**	**SI***	**Table 1705A.3 Item 10.** * May be performed by PI when specifically approved by DSA.

	10. SHOTCRETE (in addition to Cast-in-Place Concrete tests and inspections):			
	Test or Special Inspection	**Type**	**Performed By**	**Code References and Notes**

DSA 103-19: LISTING OF STRUCTURAL TESTS & SPECIAL INSPECTIONS (Steel and Aluminum), 2019 CBC

1705A.2.1, Table 1705A.2.1; AISC 303-16, AISC 341-16, AISC 358-16, AISC 360-16; AISI S100-16
Application Number: 04-119454 | **School Name:** TO BE DETERMINED | **School District:** USA SHADE
DSA File Number: | **Increment Number:** | **Date Created:** 2021-03-26 08:15:52

	17. STRUCTURAL STEEL, COLD-FORMED STEEL AND ALUMINUM USED FOR STRUCTURAL PURPOSES			
	Material Verification and Testing:			
	Test or Special Inspection	**Type**	**Performed By**	**Code References and Notes**
☑	**a.** Verify identification of all materials and: • Mill certificates indicate material properties that comply with requirements. • Material sizes, types and grades comply with requirements.	**Periodic**	*****	**Table 1705A.2.1 Item 3a–3c**, 2202A.1; AISI S100-16 Section A3.1 & A3.2, AISI S240-15 Section A3.1 & A5, AISI S220-15 Sections A4 & A6. * By special inspector or qualified technician when performed off-site.
☑	**b.** Test unidentified materials	**Test**	**LOR**	**2202A.1.**
☑	**c.** Examine seam welds of HSS shapes	**Periodic**	**SI**	DSA IR 17-3.
	Inspection:			
☑	**d.** Verify and document steel fabrication per DSA-approved construction documents.	**Periodic**	**SI**	Not applicable to cold-formed steel light-frame construction, except for trusses (**1705A.2.4**).

	18. HIGH-STRENGTH BOLTS: RCSC 2014			
	Material Verification and Testing of High-Strength Bolts, Nuts and Washers:			
	Test or Special Inspection	**Type**	**Performed By**	**Code References and Notes**
☐	**a.** Verify identification markings and manufacturer's certificates of compliance conform to ASTM standards specified in the DSA-approved documents.	**Periodic**	**SI**	**Table 1705A.2.1 Items 1a & 1b, 2202A.1**; AISC 360-16 Section A3.3, J3.1, and N3.2; RCSC 2014 Section 1.5 & 2.1; DSA IR 17-8 & DSA IR 17-9.

DSA 103-19: LISTING OF STRUCTURAL TESTS & SPECIAL INSPECTIONS (Steel and Aluminum), 2019 CBC

1705A.2.1, Table 1705A.2.1; AISC 303-16, AISC 341-16, AISC 358-16, AISC 360-16; AISI S100-16
Application Number: 04-119454 | **School Name:** TO BE DETERMINED | **School District:** USA SHADE
DSA File Number: | **Increment Number:** | **Date Created:** 2021-03-26 08:15:52

☐	**c.** Inspect end-welded studs (ASTM A-108) installation (including bend test).	**Periodic**	**SI**	**2213A.2**; AISC 360-16 (AISC 341-16 as applicable); AWS D1.1; DSA IR 17-3.
☐	**d.** Inspect floor and roof deck welds.	**Periodic**	**SI**	**1705A.2.2, Table 1705A.2.1 Item 5a.6;** AISC 360-16 (AISC 341-16 as applicable); AWS D1.3; DSA IR 17-3.
☐	**e.** Inspect welding of structural cold-formed steel.	**Periodic**	**SI***	**1705A.2.5; AWS D1.3; DSA IR 17-3.** The quality control provisions of AISI S240-15 Chapter D shall also apply. * May be performed by the project inspector when specifically approved by DSA.
☐	**f.** Inspect welding of stairs and railing systems.	**Periodic**	**SI***	**1705A.2.1**; AISC 360-16 (AISC 341-16 as applicable); AWS D1.1 & D1.3; DSA IR 17-3. * May be performed by the project inspector when specifically approved by DSA.
☐	**g.** Verification of reinforcing steel weldability.	**Periodic**	**SI**	**1705A.3.1**; AWS D1.4; DSA IR 17-3. Verify carbon equivalent reported on mill certificates.
☐	**h.** Inspect welding of reinforcing steel.	**Continuous**	**SI**	**Table 1705A.2.1 Item 5b, 1705A.3.1, Table 1705A.3 Item 2, 1903A.8;** AWS D1.4; DSA IR 17-3.

	20. NONDESTRUCTIVE TESTING: **1705A.2.1, Table 1705A.2.1; AISC 303-16, AISC 341-16, AISC 358-16, AISC 360-16; AISI S100-16**			
	Test or Special Inspection	**Type**	**Performed By**	**Code References and Notes**
☐	**a.** Ultrasonic	**Test**	**LOR**	**1705A.2.1, 1705A.2.5;** AISC 341-16 J6.2, AISC 360-16 N5.5; ANSI/ASNT CP-189, SNT-TC-1A; AWS D1.1, AWS D1.8; DSA IR 17-2.

THE SAMPLE DSA-103 FORM SHOWN ON THIS SHEET IS FOR ILLUSTRATION PURPOSES ONLY TO ASSIST IN THE COMPLETION OF FUTURE PROJECTS SPECIFIC FORM DSA-103. A CURRENT DSA-103 FORM IS TO BE COMPLETED FOR EACH APPLICATION THAT THIS PC IS BEING INCORPORATED INTO AND ALL SAMPLE DSA-103 SHEETS ARE TO BE CROSSED OUT ON THIS DRAWING.

ADDITIONAL TESTING AND INSPECTION NOTES:

1. THE PROJECT INSPECTOR AND TESTING AGENCY SHALL BE SELECTED BY THE SCHOOL DISTRICT AND APPROVED BY DSA AND THE ARCHITECT OF RECORD.
2. THE SITE PROJECT INSPECTOR SHALL BE CLASS 2.
3. THE COSTS OF THE PROJECT INSPECTOR AND TESTING AGENCY SHALL BE BORN BY THE SCHOOL DISTRICT.
4. COPIES OF VERIFIED REPORTS SHALL BE SENT TO DSA, THE ARCHITECT, THE SCHOOL DISTRICT, THE CONTRACTOR, AND THE PROJECT INSPECTOR.
5. THE IN PLANT INSPECTOR SHALL BE WELDING SPECIAL INSPECTOR FOR MATERIAL VERIFICATION AND WELDING.
6. PER 2019 CBC, SECTION 1705A.3.3, BATCH PLANT INSPECTION MAY BE WAIVED WHEN THE FOLLOWING REQUIREMENTS ARE MET:
   - 6.1. A LICENSED WEIGHMASTER SHALL POSITIVELY IDENTIFY QUANTITY OF MATERIALS AND CERTIFY EACH LOAD BY A BATCH TICKET.
   - 6.2. BATCH TICKETS, INCLUDING MATERIAL QUANTITIES AND WEIGHTS SHALL ACCOMPANY THE LOAD, SHALL BE TRANSMITTED TO THE INSPECTOR OF RECORD BY THE TRUCK DRIVER WITH LOAD IDENTIFIED THEREON. THE LOAD SHALL NOT BE PLACED WITHOUT A BATCH TICKET IDENTIFYING THE MIX. THE INSPECTOR OF RECORD SHALL KEEP A DAILY RECORD OF PLACEMENTS, IDENTIFYING EACH TRUCK IT'S LOAD, AND TIME OF RECEIPT AT THE JOBSITE, AND APPROXIMATE LOCATION OF DEPOSIT IN THE STRUCTURE AND SHALL MAINTAIN A COPY OF THE DAILY RECORD AS REQUIRED BY THE ENFORCEMENT AGENCY.

LICENSED ARCHITECT — DAVID HIGGINSON — NO. C19788 — REN 10-31-21 — STATE OF CALIFORNIA

SAMPLE DSA 103 - STATEMENT OF STRUCTURAL TESTS AND INSPECTIONS FORM - FOR ALL UNITS EXCEPT CANTILEVER AND SINGLE POST UNITS

THESE PLANS AND SPECIFICATIONS ARE THE PROPERTY OF USA SHADE AND FABRIC STRUCTURES AND SHALL NOT BE REPRODUCED WITHOUT THEIR WRITTEN

USA SHADE & Fabric Structures
CORPORATE HEADQUARTERS
2580 ESTERS BLVD. SUITE 100
DFW AIRPORT, TX, 75261
800-966-5005

CERTIFICATIONS:
IAS CERTIFICATION No: FA-428
CLARK COUNTY MANUFACTURER CERTIFICATION NUMBER (NEVADA): 355

CUSTOMER:
College of the Sequoias

PROJECT NAME:
Tulare Campus

LOCATION:
4999 E. Bardsley Ave
Tulare, CA 93274

MODEL NUMBER:

APPROVED
DIV. OF THE STATE ARCHITECT
APP: 04-119454 PC
REVIEWED FOR
SS ☑ FLS ☑ ACS ☑ CG ☐
DATE: 03/26/2021

STRUCTURE TYPE:

SCALE : VARIES

DRAWING SIZE: D

PRE-CHECK (PC) DOCUMENT
Code : 2019 CBC
A separate project application for construction is required.

Eng. By :	DWH	10/16/20
Design By :	DWH	10/16/20
Approved By :	DWH	10/16/20

DRAWING DESCRIPTION:
DSA 103 SAMPLE FORM

DWG.

SHEET P.C. T-2.0

REV.

DSA 103-19: LISTING OF STRUCTURAL TESTS & SPECIAL INSPECTIONS (Steel and Aluminum), 2019 CBC

1705A.2.1, Table 1705A.2.1; AISC 303-16, AISC 341-16, AISC 358-16, AISC 360-16; AISI S100-16

Application Number: 04-119454
DSA File Number:
School Name: TO BE DETERMINED
Increment Number:
School District: USA SHADE
Date Created: 2021-03-26 08:15:52

☐	**b.** Magnetic Particle	**Test**	**LOR**	**1705A.2.1, 1705A.2.5;** AISC 341-16 J6.2. AISC 360-16 N5.5; ANSI/ ASNT CP-189, SNT-TC-1A; AWS D1.1, AWS D1.8; DSA IR 17-2.
☐	**c.**	**Test**	**LOR**	

	21. STEEL JOISTS AND TRUSSES: 1705A.2.1, Table 1705A.2.1; AISC 303-16, AISC 341-16, AISC 358-16, AISC 360-16; AISI S100-16			
	Test or Special Inspection	**Type**	**Performed By**	**Code References and Notes**
☐	**a.** Verify size, type and grade for all chord and web members as well as connectors and weld filler material; verify joist profile, dimensions and camber (if applicable); verify all weld locations, lengths and profiles; mark or tag each joist.	**Continuous**	**SI**	**1705A.2.3, Table 1705A.2.3;** AWS D1.1; DSA IR 22-3 for steel joists only. **1705A.2.4;** AWS D1.3 for cold-formed steel trusses.

	22. SPRAY APPLIED FIRE-PROOFING: 1705A.2.1, Table 1705A.2.1; AISC 303-16, AISC 341-16, AISC 358-16, AISC 360-16; AISI S100-16			
	Test or Special Inspection	**Type**	**Performed By**	**Code References and Notes**
☐	**a.** Examine structural steel surface conditions, inspect application, take samples, measure thickness and verify compliance of all aspects of application with DSA-approved documents.	**Periodic**	**SI**	**1705A.14.**
☐	**b.** Test bond strength.	**Test**	**LOR**	**1705A.14.6.**

DSA 103-19: LISTING OF STRUCTURAL TESTS & SPECIAL INSPECTIONS (Steel and Aluminum), 2019 CBC

1705A.2.1, Table 1705A.2.1; AISC 303-16, AISC 341-16, AISC 358-16, AISC 360-16; AISI S100-16

Application Number: 04-119454
DSA File Number:
School Name: TO BE DETERMINED
Increment Number:
School District: USA SHADE
Date Created: 2021-03-26 08:15:52

☐	**c.** Test density.	**Test**	**LOR**	**1705A.14.5.**

	23. ANCHOR BOLTS AND ANCHOR RODS:			
	Test or Special Inspection	**Type**	**Performed By**	**Code References and Notes**
☑	**a.** Anchor Bolts and Anchor Rods	**Test**	**LOR**	Sample and test anchor bolts and anchor rods not readily identifiable per procedures noted in DSA IR 17-11.
☐	**b.** Threaded rod not used for foundation anchorage.	**Test**	**LOR**	Sample and test threaded rods not readily identifiable per procedures noted in DSA IR 17-11.

	Other Steel			
	Test or Special Inspection	**Type**	**Performed By**	**Code References and Notes**
☐	**a.**			

Appendix: Work Exempt from DSA Requirements for Structural Tests / Special Inspections

Application Number: 04-119454
DSA File Number:
School Name: TO BE DETERMINED
Increment Number:
School District: USA SHADE
Date Created: 2021-03-26 08:15:52

Exempt items given in DSA IR A-22 or the 2019 CBC (including DSA amendments) and those items identified below with a check mark by the design professional are NOT subject to DSA requirements for the structural tests / special inspections noted. **Items marked as exempt shall be identified on the approved construction documents**. The project inspector shall verify all construction complies with the approved construction documents.

	SOILS:
☐	1. Deep foundations acting as a cantilever footing designed based on maximum allowable pressures per CBC Table 1806A.2 and having no geotechnical report for the following cases: A) free standing sign or scoreboard, B) cell or antenna towers and poles less than 35'-0" tall (e.g., lighting poles, flag poles, poles supporting open mesh fences, etc.), C) single-story structure with dead load less than 5 psf (e.g., open fabric shade structure), or D) covered walkway structure with an apex height less than 10'-0" above adjacent grade.
☐	2. Shallow foundations, etc. are exempt from special inspections and testing by a Geotechnical Engineer for the following cases: A) buildings without a geotechnical report and meeting the exception item #1 criteria in CBC Section 1803A.2 supported by native soil (any excavation depth) or fill soil (not exceeding 12" depth per CBC Section 1804A.6), B) soil scarification/recompaction not exceeding 12" depth, C) native or fill soil supporting exterior non-structural flatwork (e.g., sidewalks, site concrete ramps, site stairs, parking lots, driveways, etc.), D) unpaved landscaping and playground areas, or E) utility trench backfill.

	CONCRETE/MASONRY:
☐	1. Post-installed anchors for the following: A) exempt non-structural components (e.g., mechanical, electrical, plumbing equipment - see item 7 for "Welding" given in CBC Section 1617A.1.18 (which replaces ASCE 7-16, Section 13.1.4) or B) interior nonstructural wall partitions meeting criteria listed in exempt item 3 for "Welding."
☐	2. Concrete batch plant inspection is not required for items given in CBC Section 1705A.3.3.2 subject to the requirements and limitations in that section.

Appendix: Work Exempt from DSA Requirements for Structural Tests / Special Inspections

Application Number: 04-119454
DSA File Number:
School Name: TO BE DETERMINED
Increment Number:
School District: USA SHADE
Date Created: 2021-03-26 08:15:52

☐	3. Non-bearing non-shear masonry walls may be exempt from certain DSA masonry testing and special inspection items as allowed per DSA IR 21-1.16. Refer to construction documents for specific exemptions accordingly for each applicable wall condition.
☐	4. Epoxy shear dowels in site flatwork and/or other non-structural concrete.
☐	5. Testing of reinforcing bars is not required for items given in CBC Section 1910A.2 subject to the requirements and limitations in that section.

	Welding:
☐	1. Solid-clad and open-mesh gates with maximum leaf span or rolling section for rolling gates of 10' and apex height less than 8'-0" above lowest adjacent grade. When located above circulation or occupied space below, these gates are not located within 1.5x gate/fence height (max 8'-0") to the edge of floor or roof.
☐	2. Handrails, guardrails, and modular or relocatable ramps associated with walking surfaces less than 30" above adjacent grade (excluding post base connections per the 'Exception' language in Section 1705A.2.1); fillet welds shall not be ground flush.
☐	3. Non-structural interior cold-formed steel framing spanning less than 15'-0", such as in interior partitions, interior soffits, etc. supporting only self weight and light-weight finishes or adhered tile, masonry, stone, or terra cotta veneer no more than 5/8" thickness and apex less than 20'-0" in height and not over an exit way. Maximum tributary load to a member shall not exceed the equivalent of that occurring from a 10'x10' opening in a 15' tall wall for a header or king stud.
☐	4. Manufactured support frames and curbs using hot rolled or cold-formed steel (i.e., light gauge) for mechanical, electrical, or plumbing equipment weighing less than 2000# (equipment only) (connections of such frames to superstructure elements using welding will require special inspection as noted in selected item(s) for Sections 19, 19.1 and/or 19.2 of listing above).
☐	5. Manufactured components (e.g., Tolco, B-Line, Aflcon, etc.) for mechanical, electrical, or plumbing hanger support and bracing (connections of such components to superstructure elements using welding will require special inspection as noted in selected item(s) for Sections 19, 19.1 and/or 19.2 of listing above).

Appendix: Work Exempt from DSA Requirements for Structural Tests / Special Inspections

Application Number: 04-119454
DSA File Number:
School Name: TO BE DETERMINED
Increment Number:
School District: USA SHADE
Date Created: 2021-03-26 08:15:52

☐	6. TV Brackets, projector mounts with a valid listing (see DSA IR A-5) and recreational equipment (e.g., playground structures, basketball backstops, etc.) (connections of such elements to superstructure elements using welding will require special inspection as noted in selected item(s) for section 19, 19.1 and/or 19.2 located in the Steel/Aluminum category).
☐	7. Any support for exempt non-structural components given in CBC Section 1617A.1.18 (which replaces ASCE 7-16, Section 13.1.4) meeting the following: A) when supported on a floor/roof, <400# and resulting composite center of mass (including component's center of mass) ≤4' above supporting floor/roof, B) when hung from a wall or roof/floor, <20# for discrete units or <5 plf for distributed systems.

DSA 103-19: LISTING OF STRUCTURAL TESTS & SPECIAL INSPECTIONS(SIGNATURE), 2019 CBC

Application Number: 04-119454
DSA File Number:
School Name: TO BE DETERMINED
Increment Number:
School District: USA SHADE
Date Created: 2021-03-26 08:15:52

Name of Architect or Engineer in general responsible charge:

Name of Structural Engineer (When structural design has been delegated):

Signature of Architect or Structural Engineer: Date:

Note: To facilitate DSA electronic mark-ups and identification stamp application, DSA recommends against using secured electronic or digital signatures.

DSA STAMP

DSA 103-19: LIST OF REQUIRED VERIFIED REPORTS, CBC 2019

Application Number: 04-119454
DSA File Number:
School Name: TO BE DETERMINED
Increment Number:
School District: USA SHADE
Date Created: 2021-03-26 08:15:52

1. Structural Testing and Inspection: Laboratory Verified Report Form DSA 291
2. Concrete Batch Plant Inspection: Laboratory Verified Report Form DSA 291
3. Shop Welding Inspection: Laboratory Verified Report Form DSA 291, or, for independently contracting SI, Special Inspection Verified Report Form DSA 292

THE SAMPLE DSA-103 FORM SHOWN ON THIS SHEET IS FOR ILLUSTRATION PURPOSES ONLY TO ASSIST IN THE COMPLETION OF FUTURE PROJECTS SPECIFIC FORM DSA-103, A CURRENT DSA-103 FORM IS TO BE COMPLETED FOR EACH APPLICATION THAT THIS PC IS BEING INCORPORATED INTO AND ALL SAMPLE DSA-103 SHEETS ARE TO BE CROSSED OUT ON THIS DRAWING.

ADDITIONAL TESTING AND INSPECTION NOTES:

1. THE PROJECT INSPECTOR AND TESTING AGENCY SHALL BE SELECTED BY THE SCHOOL DISTRICT AND APPROVED BY DSA AND THE ARCHITECT OF RECORD.
2. THE SITE PROJECT INSPECTOR SHALL BE CLASS 2.
3. THE COSTS OF THE PROJECT INSPECTOR AND TESTING AGENCY SHALL BE BORN BY THE SCHOOL DISTRICT.
4. COPIES OF VERIFIED REPORTS SHALL BE SENT TO DSA, THE ARCHITECT, THE SCHOOL DISTRICT, THE CONTRACTOR, AND THE PROJECT INSPECTOR.
5. THE IN PLANT INSPECTOR SHALL BE WELDING SPECIAL INSPECTOR FOR MATERIAL VERIFICATION AND WELDING.
6. PER 2019 CBC, SECTION 1705A.3.3, BATCH PLANT INSPECTION MAY BE WAIVED WHEN THE FOLLOWING REQUIREMENTS ARE MET:
   - 6.1. A LICENSED WEIGHMASTER SHALL POSITIVELY IDENTIFY QUANTITY OF MATERIALS AND CERTIFY EACH LOAD BY A BATCH TICKET.
   - 6.2. BATCH TICKETS, INCLUDING MATERIAL QUANTITIES AND WEIGHTS SHALL ACCOMPANY THE LOAD, SHALL BE TRANSMITTED TO THE INSPECTOR OF RECORD BY THE TRUCK DRIVER WITH LOAD IDENTIFIED THEREON. THE LOAD SHALL NOT BE PLACED WITHOUT A BATCH TICKET IDENTIFYING THE MIX. THE INSPECTOR OF RECORD SHALL KEEP A DAILY RECORD OF PLACEMENTS, IDENTIFYING EACH TRUCK IT'S LOAD, AND TIME OF RECEIPT AT THE JOBSITE, AND APPROXIMATE LOCATION OF DEPOSIT IN THE STRUCTURE AND SHALL MAINTAIN A COPY OF THE DAILY RECORD AS REQUIRED BY THE ENFORCEMENT AGENCY.

THESE PLANS AND SPECIFICATIONS ARE THE PROPERTY OF USA SHADE AND FABRIC STRUCTURES AND SHALL NOT BE REPRODUCED WITHOUT THEIR WRITTEN

USA SHADE & Fabric Structures
CORPORATE HEADQUARTERS
2580 ESTERS BLVD. SUITE 100
DFW AIRPORT, TX, 75261
800-966-5005

CERTIFICATIONS:
IAS CERTIFICATION No: FA-428
CLARK COUNTY MANUFACTURER CERTIFICATION NUMBER (NEVADA): 355

CUSTOMER:
College of the Sequoias

PROJECT NAME:
Tulare Campus

LOCATION:
4999 E. Bardsley Ave
Tulare, CA 93274

MODEL NUMBER:

APPROVED
DIV. OF THE STATE ARCHITECT
APP: 04-119454 PC
REVIEWED FOR
SS ☑ FLS ☑ ACS ☑ CG ☐
DATE: 03/26/2021

STRUCTURE TYPE:

SCALE : VARIES

DRAWING SIZE: D

PRE-CHECK (PC) DOCUMENT
Code : 2019 CBC
A separate project application for construction is required.

Eng. By :	**DWH**	**10/16/20**
Design By :	**DWH**	**10/16/20**
Approved By :	**DWH**	**10/16/20**

DRAWING DESCRIPTION:
DSA 103 SAMPLE FORM

DWG.

SHEET P.C. T-2.1

REV.

LICENSED ARCHITECT
DAVID HIGGINSON
NO.C19168
REN. 10-31-21
STATE OF CALIFORNIA

SAMPLE DSA 103 - STATEMENT OF STRUCTURAL TESTS AND INSPECTIONS FORM - FOR ALL UNITS EXCEPT CANTILEVER AND SINGLE POST UNITS

GENERAL NOTES
DESIGN LOADS

BUILDING CODE	CBC 2019 (BASED ON IBC 2018)
LIVE LOADS	5 PSF
SNOW LOAD	5 PSF
WIND LOADS	115 MPH (3-Sec. Gust); EXPOSURE C; TOPOGRAPHIC FACTOR , Kzt = 1.0

1.- SPECIAL INSPECTION REQUIREMENTS SHALL FOLLOW THE ATTACHED SAMPLE TEST AND INSPECTION LIST (T & I LIST) APPROVED BY DSA. THE SHOP WELDING INSPECTION SHALL INCLUDE WELDING OF ALL STEEL MEMBERS AND IDENTIFICATION OF STEEL THROUGH MILL CERTIFICATE OR MATERIAL TESTING, UNCERTIFIED STEEL SHALL BE TESTED TO THE REQUIREMENTS OF CBC 2019 CHAPTER 17A. THE FIELD SPECIAL INSPECTION SHALL INCLUDE COMPRESSION CYLINDER TESTS FOR THE CONCRETE FOUNDATION.

2.- STRUCTURE SHALL BE IN THE LOCATION SHOWN ON THE SITE SPECIFIC DSA APPLICATION DRAWING.

3.- FOUNDATION DESIGN BASED ON CBC 2019, TABLE 1806A.2, SOIL CLASS 5 (ALLOWABLE FOUNDATION PRESSURE 1500 PSF)

4.- DESIGN PER FOLLOWING CODES: CBC 2019, ASCE 7-16, AISC 360-16, AISC 341-16, ACI 318-14, ASCE 55-16 & ASCE 19-16

STRUCTURAL STEEL

1.- FABRICATION OF THE STEEL STRUCTURES SHALL BE PERFORMED BY SHADE STRUCTURES OR AN AUTHORIZED LICENSEE. MATERIAL TESTING (OR MILL CERTIFICATES) AND INSPECTION OF WELDING SHALL BE CONDUCTED PER CBC 2019 SECTIONS 1704A, 1705A, 1705A.2, AND TABLE 1705A.2.1.

2.- ONLY CALIFORNIA LICENSED CONTRACTORS AUTHORIZED BY SHADE STRUCTURES SHALL INSTALL THE SHADE STRUCTURES.

3.- ALL WORK SHALL CONFORM TO CBC 2019 EDITION, TITLE 24, CALIFORNIA CODE OF REGULATIONS (CCR)

4.- ALL GALVANIZED STEEL TUBE PRODUCTS MANUFACTURED BY ALLIED TUBE & CONDUIT FOR THIS STRUCTURE SHALL BE, AND CONFORM TO ASTM A500-16, IN ITS' ENTIRETY.
TYPICAL MECHANICAL PROPERTIES ARE:
ROUND TUBE 42,000 PSI YIELD STRESS MINIMUM / 48,000 PSI TENSILE STRESS MINIMUM

5.- ALL STRUCTURAL SHAPES SHALL BE COLD FORMED HSS ASTM A500 GRADE B, UNLESS OTHERWISE NOTED. TYPICAL MECHANICAL PROPERTIES ACHIEVED FOR HSS PRODUCTS:
SQUARE AND RECTANGULAR 46,000 PSI YIELD STRESS / 58,000 PSI TENSILE STRESS
ROUND PIPE 42,000 PSI YIELD STRESS / 58,000 PSI TENSILE STRESS

6.- ALL PLATES PRODUCTS SHALL COMPLY WITH ASTM A572 GRADE 50.

7.- STRUCTURAL STEEL SHALL BE DETAILED, FABRICATED AND ERECTED IN ACCORDANCE WITH A.I.S.C. SPECIFICATIONS.

8.- ALL WELDING TO CONFORM WITH AMERICAN WELDING SOCIETY STANDARDS AND SHALL BE INSPECTED BY AN AWS/CWI INSPECTOR. AWS D1.1 FOR HOT ROLLED. AWS D1.3 FOR SHEET/COLD FORMED. AWS D1.8 SEISMIC SUPPLEMENT.

9.- ALL FULL PENETRATION WELD SHALL BE CONTINUOUSLY INSPECTED PER AWS D1.1 & D1.8.

10.- SHOP CONNECTIONS SHALL BE WELDED UNLESS NOTED OTHERWISE. FIELD CONNECTIONS SHALL BE AS INDICATED ON THE DRAWINGS (IF REQUIRED). ALL FILLET WELDS SHALL BE A MINIMUM OF 3/16" ER70SX ELECTRODES UNLESS OTHERWISE NOTED. EITHER SMAW OR GMAW IS ACCEPTABLE.

11.- ALL STAINLESS STEEL BOLTS SHALL COMPLY WITH ASTM F-593, YIELD STRENGTH= 65 KSI, TENSILE STRENGTH=100 KSI MINIMUM, ALLOY GROUP 1, CONDITION CW1. ALL NUTS SHALL COMPLY WITH ASTM F-594 ALLOY GROUP 1, CONDITION CW1. REFERRING TO RCSC, ASTM F-593 IS NOT CONSIDERED AS HIGH STRENGTH BOLTS.

12.- ALL STRUCTURAL STEEL (ITEMS FROM NOTE 5) SHALL BE POWDER COATED WITH ONE SHOP COAT (2.5 MILS MIN.) OF ZINC-RICH PRIMER, UNDERCOAT, AND FINISH COAT, OR EQUIVALENT PAINT SYSTEM. THIS COAT IS A WEATHER RESISTANT POWDER COATING BASED ON POLYESTER TGIC (MANUFACTURED BY SHERWIN WILLIAMS, ASKO NOBEL, PPG OR TIGER DRYLAC). TO ACHIEVE OPTIMUM ADHESION, IT IS RECOMMENDED THAT THE PROPER TREATMENT AND DRYING TAKE PLACE BEFORE COATING. POLYESTER POWDER (TGIC) SPECIFICATIONS SHALL BE AS FOLLOWS:
- PENCIL HARDNESS (ASTM D-3363). - HUMIDITY (ASTM D-2247).
- SOLVENT RESISTANCE (PCI METHOD) - 50 DBL RUBS SL. SOFTNESS.

13.- ALL STEEL ROUND TUBING (ITEMS FROM NOTE 4) SHALL BE TRIPLE COATED FOR RUST PROTECTION USING THE IN-LINE ELECTROPLATING COAT PROCESS. TUBING SHALL BE INTERNALLY COATED WITH ZINC AND ORGANIC COATINGS TO PREVENT CORROSION AS MANUFACTURED BY ALLIED TUBE & CONDUIT.

14.- COLD-FORMED STEEL MEMBERS SHALL BE 55% ALUMINUM ZINC ALLOY COATED PER ASTM A792/A792M STANDARD IN ACCORDANCE TO AISI S200 TABLE A4-1, CP 90 COATING DESIGNATION. ALL EXPOSED STEEL FASTENERS SHALL BE STAINLESS STEEL (TYPE 304 MINIMUM), HOT DIP GALVANIZED (ASTM A153, CLASS D MINIMUM OR ASTM F2329), OR PROTECTED WITH CORROSION PREVENTIVE COATING THAT DEMONSTRATED NO MORE THAN 2% OF RED RUST IN MINIMUM 1,000 HOURS OF EXPOSURE IN SALT SPRAY TEST PER ASTM B117. ZINC-PLATED FASTENERS DO NOT COMPLY WITH THIS REQUIREMENT.

CONCRETE SPECIFICATION

1.- CONCRETE SHALL BE SAMPLED AND TESTED PER CBC 2019 SECTION 1903A & SHALL BE INSPECTED PER SECTION 1903A.

2.- CONCRETE TO BE F'c= 4500 PSI, TYPE V CEMENT, WATER/CEMENT RATIO OF 0.45, PER ACI 318-14 CHAPTER 5. REINFORCING STEEL TO BE Fy= 60000 PSI , MIN. GR. 60

3.- ALL ANCHOR BOLTS SET IN NEW CONCRETE (WHEN APPLICABLE) SHALL COMPLY WITH ASTM F-1554 GRADE 55 (GALVANIZED PER ASTM A153, CLASS D MINIMUM OR ASTM F2329).
ANCHOR BOLT'S EMBEDMENT NEEDS TO BE AS FOLLOW:
A) ANCHOR BOLT Ø1 1/4" 30 IN (MINIMUM EMBEDMENT)

4.- CERTIFIED MILL TEST REPORTS ARE TO BE PROVIDED FOR EACH SHIPMENT OF REINFORCEMENT.

5.- ALL NON-SHRINK GROUT SHALL HAVE A MINIMUM 28 DAYS COMPRESSIVE STRENGTH OF 5000 PSI, AND SHALL COMPLY THE REQUIREMENTS OF ASTM C109, ASTM C939, ASTM C1090, ASTM C1107, WHEN APPLICABLE.

FABRIC SPECIFICATION

1.- FABRIC SHALL BE MANUFACTURED BY MULTIKNIT LTD, OR OTHER COMPANY WHO CAN MANUFACTURE FABRIC, WHICH MEETS THE SPECIFICATIONS LISTED ON PAGE 2000, AND SHALL BE FABRICATED FROM POLYETHYLENE MATERIALS.

2.- THE FABRIC SHALL RETAIN 80% OF ITS TENSILE AND TEARING STRENGTH AFTER ULTRAVIOLET EXPOSURE PER ASTM G53 USING A 313 NM LIGHT SOURCE FOR 500 HOURS WHILE MOISTENED FOR 1 HOUR EVERY 12 HOURS.

3.- PROVIDE CERTIFICATION BY MANUFACTURER AND STATE FIRE MARSHAL TO SCHOOL'S DISTRICT INSPECTOR OF RECORD AT SITE SPECIFIC INSTALLATION. COPY OF FIRE CERTIFICATION SHALL BE SENT TO DSA.

4.- FABRIC SHALL REQUIRE ANNUAL INSPECTION AND MAINTENANCE BY THE DISTRICT. FABRICS SAMPLES OF THE SAME MATERIAL WHICH ARE MAINTAINED AT THE PROJECTS SITE SHALL BE TESTED TO BE IN COMPLIANCE WITH ASTM D5034 AND D2261. THE ANNUAL TESTING ON THE APPROVED PLANS SHALL BE COMPARED TO THE FABRIC SPECIFICATIONS INDICATED IN NOTE 1 OF "FABRIC SPECIFICATION" ON THE APPROVED PLANS. THE FABRIC SHALL BE REPLACED WHEN THE TEST RESULTS RETURN LESS THAN 50% OF THE ULTIMATE VALUES IN NOTE 1 OF "FABRIC SPECIFICATION". FIRE TEST ON FABRIC: NFPA 701 TEST 2 AND ASTM E 84 EXTENDED 30 MINUTES TEST. FLAME SPREAD INDEX (FSI): 10. SMOKE DEVELOPED INDEX (SDI): 50. FABRIC IS ACCEPTABLE FOR USE IN WILDLIFE URBAN INTERFACE AREA.

5.- FABRIC TOP NEEDS TO BE REMOVED IF SNOW EXCEEDING 5 PSF ARE ANTICIPATED, FABRIC TOP NEEDS TO BE REMOVED IF WINDS EXCEEDING 115 MPH ARE ANTICIPATED.

6.- A VISUAL INSPECTION LOOKING FOR TEAR AND ABNORMAL WEAR IN FABRIC MATERIAL AND THREAD IS REQUIRED PRIOR TO RE-INSTALLATION. USA SHADE & FABRIC STRUCTURES SHALL BE NOTIFIED IF SIGNIFICANT DAMAGE IS PRESENT BEFORE RE-INSTALLATION.

AIRCRAFT CABLE

1.- FOR FABRIC ATTACHMENT USE 3/8" 7x19 GALV. CABLE PER ASTM A1023A, ASTM 1023M-02, WITH A BREAKING STRENGTH VALUE OF 14,400 LBS. CABLE SHALL BE TENSIONED TO 250 LBS MINIMUM. THE MAXIMUM CALCULATED CABLE ALLOWABLE CAPACITY IS Sa=4909 LB.

2.- CABLES SHALL BE FED THROUGH THE FABRIC SLEEVES AROUND THE PERIMETER OF THE CANOPY AND TENSIONED UNTIL THE FABRIC PANELS (DESIGNED PURPOSELY UNDERSIZED) REACH A TAUT APPEARANCE, ANY LONG TERM CABLE SAG SHALL BE MINIMIZED DURING THE MAINTENANCE RE-TIGHTING VISITS AS REQUIRED.

2019 CBC PC DESIGN NOTES

FLOOR LIVE LOAD	N/A	
ROOF LIVE LOAD	RLL	5 PSF
ALLOWABLE SOIL PRESSURE:		
DL + LL (CONC FTG)		1500 PSF
DL + LL + SEISMIC (CONC FTG)		1500 PSF
LATERAL BEARING DESIGN VALUE		100 PSF/FT BELOW NATURAL GRADE, PER TABLE 1806A.2

TWO TIMES THE TABULAR VALUE IS USED (200 PSF/FT)
PER CBC SECTION 1806A.3.4.
ALLOWABLE PIER FRICTIONAL RESISTANCE 250 PSF MAXIMUM
BASED ON SECTION 1810A.3.3.1.4 (ONE-SIXTH OF THE BEARING VALUE).
UPLIFT FRICTIONAL RESISTANCE HAVE A SAFETY FACTOR OF 3.

ROOF SNOW LOAD		5 PSF
ICE LOAD		ZERO PSF
FLOOD HAZARD AREA		NO

WHEN A SITE SPECIFIC PROJECT IS LOCATED IN A FLOOD ZONE OTHER THAN ZONE X, A LETTER STAMPED AND SIGNED FROM A SOILS ENGINEER IS NEEDED TO VALIDATE THE ALLOWABLE SOIL VALUES SPECIFIED IN THE PC ARE STILL APPLICABLE.

WIND DESIGN DIRECTIONAL PROCEDURE: ASCE 7-16, SECTION 27.3.2

-BASIC DESIGN WIND SPEED (3 SEC GUST)	V	115 MPH
-WIND EXPOSURE FACTOR		C
-TOPOGRAPHIC FACTOR	Kzt	1
-RISK CATEGORY		II
-VELOCITY PRESSURE EXPOSURE COEFFICIENT	Kz	0.88
-VELOCITY PRESSURE	qz	25.32 PSF

SEISMIC DESIGN:

-SITE CLASS		D
	SS	3.00g
	S1	1.389g
-SPECTRAL RESPONSE COEFFICIENTS	SDS	2.00
	SD1	1.39

-LATERAL FORCE RESISTING SYSTEM G.2 ORDINARY CANTILEVERED COLUMN SYSTEM.

-SEISMIC IMPORTANCE FACTOR	I	1.0
-DESIGN BASE SHEAR	V	4014 LB
-SEISMIC RESPONSE COEFFICIENTS	Cs	1.6
-RESPONSE MODIFICATION FACTOR	R	1.25
-ANALYSIS PROCEDURE		EQUIVALENT LATERAL FORCE
-RISK CATEGORY		II
-SEISMIC DESIGN CATEGORY		E
-SITE COEFFICIENT CATEGORY	Fa	1
	Fv	1.5

GEOHAZARD REPORT IS NOT REQUIRED FOR OPEN FABRIC STRUCTURES 1,600 SQF OR LESS COMPLYING WITH THE REQUIREMENTS OF IR A-4 SECTION 3.1.1. OPEN FABRIC SHADE STRUCTURES GREATER THAN 1,600 SQUARE FEET UP TO A MAXIMUM OF 4,000 SQUARE FEET AND COMPLYING WITH THE REQUIREMENTS NOTED IN IR A-4 SECTION 3.1.1 DO NOT REQUIRE A GEOHAZARD REPORT PROVIDED A GEOTECHNICAL REPORT INDICATES THAT NO LIQUEFACTION POTENTIAL EXISTS.

ARCHITECT OF RECORD TO DETERMINE IF SPECIFIC SITE IS IN GEOLOGIC HAZARD ZONE, GEOHAZARD REPORT REQUIREMENTS PER DSA IR A-4.

PC OPTIONS SHALL NOT INCLUDE LIQUEFIABLE SOIL (EXCEPTION: OPEN FABRIC SHADE STRUCTURES 1,600 SQUARE FEET OR LESS COMPLYING WITH REQUIREMENTS OF IR A-4 SECTION 3.1.1). IF STRUCTURE IS LOCATED IN AN AREA WITH LIQUEFIABLE SOIL OR SITE CLASS F, OVER-THE-COUNTER SUBMITTAL IS NOT ALLOWED AND REGULAR PROJECT SUBMITTAL IS REQUIRED. IF SITE IS NOT IN A MAPPED LIQUEFACTION HAZARD ZONE, IT MAY BE PRESUMED THAT NO LIQUEFACTION HAZARD EXISTS ON THAT SITE UNLESS A SITE-SPECIFIC GEOTECHNICAL REPORT IDENTIFIES SUCH HAZARD.

MINIMUM FOUNDATION SETBACK LIMIT IN ADJACENT SLOPE: THE DEPTH OF REQUIRED PIER EMBEDMENT SHALL START FROM AN ELEVATION THAT CORRESPONDS WITH A HORIZONTAL CLEAR DISTANCE OF 14 FEET THAT INTERSECT WITH THE SLOPE (DAYLIGHTING). IF SETBACK LIMITS ARE SMALLER THAN CBC REQUIRES, A SITE-SPECIFIC SOILS REPORT IS REQUIRED.

MINIMUM CLASS 2 PROJECT INSPECTOR REQUIRED.

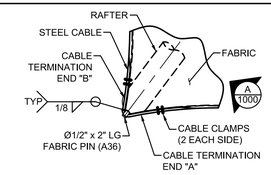

DETAIL 1
REFER TO TOP VIEW

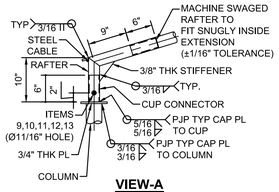

VIEW-A
REFER TO DETAIL-1

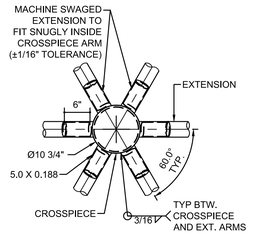

DETAIL-2
REFER TO TOP VIEW

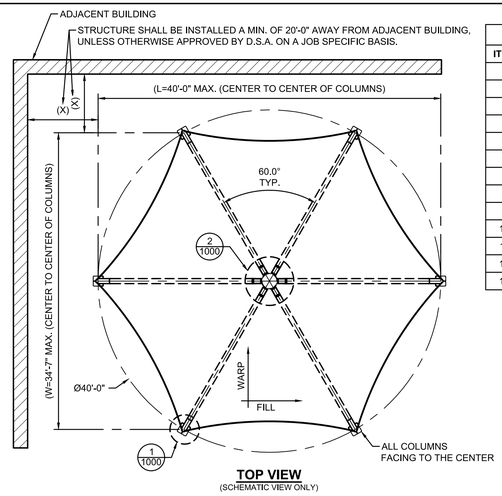

TOP VIEW
(SCHEMATIC VIEW ONLY)

LIST OF MATERIALS			
ITEM	QTY	DESCRIPTION	MATERIAL
1	6	COLUMN	HSS 5.0 x 5.0 x 0.25
2	6	CUP CONNECTOR (6" LG)	HSS 4.5 x 0.375
3	6	RAFTER (GALVANIZED STEEL TUBE)	5.00 GA 7 RD. TUBE (5.0 x 0.188)
4	6	EXTENSION (GALVANIZED STEEL TUBE)	5.00 GA 7 RD. TUBE (5.0 x 0.188)
5	1	CROSSPIECE	HSS 10.75 x 0.375
6	1	FABRIC TOP	FR COLOURSHADE Z25
7	1	Ø3/8" CABLE	GALVANIZED STEEL
8	4	Ø3/8" CABLE CLAMP	GALVANIZED STEEL
9	6	Ø5/8"-11NC x 6 1/2" HEX BOLT	18-8 SS
10	6	Ø5/8"-11NC HEX NUT	18-8 SS
11	12	Ø5/8" FLAT WASHER	18-8 SS
12	12	Ø5/8" FLAT WASHER	DELRIN (ACETAL)
13	6	Ø5/8" SPLIT LOCK WASHER	18-8 SS

CODE ANALYSIS					
BUILDING	OCCUPANCY	CONST. TYPE	AREA (SQ. FT.)	OCCUPANT LOAD FACTOR	OCCUPANT LOAD
SHADE STRUCTURE	A-3	V-B	888 SF	7 SF/OCC.	127

MAXIMUM OCCUPANT LOAD (PER CBC 2019 TABLE 1604A.5)
-K-12: 250 PERSONS
-PUBLIC ASSEMBLY: 300 PERSONS
-EDUCATIONAL OCCUPANCIES ABOVE 12TH GRADE: 500 PERSONS

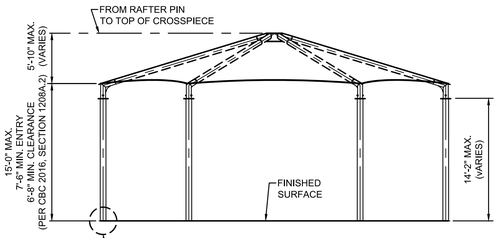

FRONT VIEW
(SCHEMATIC VIEW ONLY)

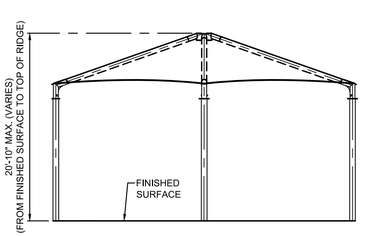

SIDE VIEW
(SCHEMATIC VIEW ONLY)

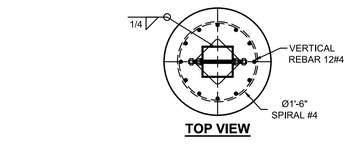

TOP VIEW

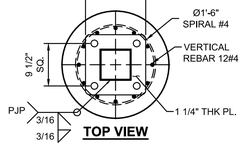

TOP VIEW

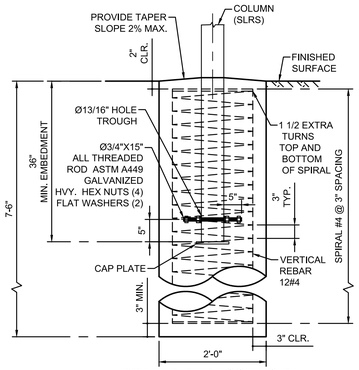

DRILLED PIER FOOTING-PIH
(EMBEDDED, PIH)
(USE FOR NON-CONSTRAINED CASES)

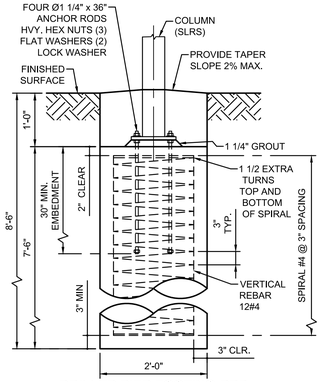

DRILLED PIER FOOTING-RBP
(RECESSED BASE PLATE, RBP)
(USE FOR NON-CONSTRAINED CASES)
(OPTIONAL)

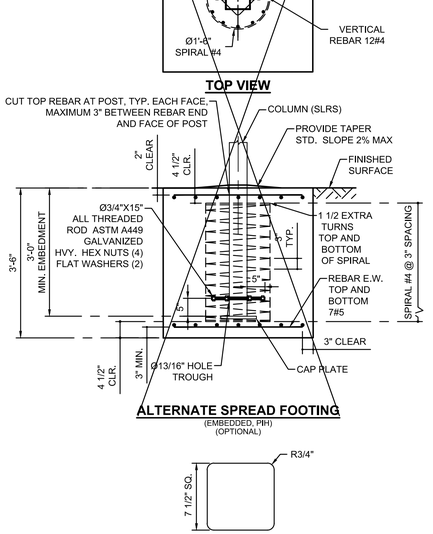

TOP VIEW

ALTERNATE SPREAD FOOTING
(EMBEDDED, PIH)
(OPTIONAL)

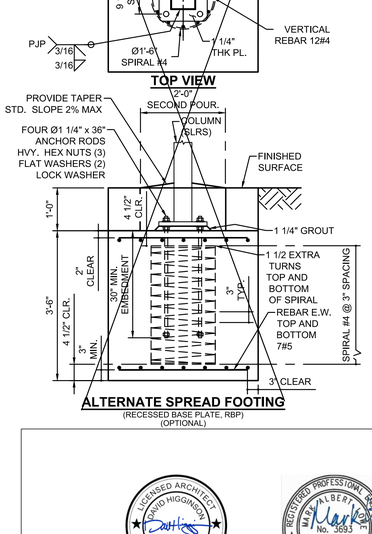

TOP VIEW

ALTERNATE SPREAD FOOTING
(RECESSED BASE PLATE, RBP)
(OPTIONAL)

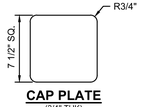

CAP PLATE
(3/4" THK)
(TYP. FOR ALL COLUMNS)
(TOP OF RBP COLUMNS)
(TOP & BOT. OF PIH COLUMNS)

LICENSED ARCHITECT DAVID HIGGINSON NO. C19186 REN. 10-31-21 STATE OF CALIFORNIA

REGISTERED PROFESSIONAL ENGINEER MARK ALBERT LOVE No. 3093 STRUCTURAL STATE OF CALIFORNIA

THESE PLANS AND SPECIFICATIONS ARE THE PROPERTY OF USA SHADE AND FABRIC STRUCTURES AND SHALL NOT BE REPRODUCED WITHOUT THEIR WRITTEN PERMISSION.

USA SHADE & Fabric Structures
CORPORATE HEADQUARTERS
2580 ESTERS BLVD. SUITE 100
DFW AIRPORT, TX, 75261
800-966-5005

CERTIFICATIONS:
IAS CERTIFICATION No: FA-428
CLARK COUNTY MANUFACTURER CERTIFICATION NUMBER (NEVADA): 355

CUSTOMER:
College of the Sequoias

PROJECT NAME:
Tulare Campus

LOCATION:
4999 E. Bardsley Ave
Tulare, CA 93274

MODEL NUMBER:
DSA60340-19

APPROVED
DIV. OF THE STATE ARCHITECT
APP: 04-119454 PC
REVIEWED FOR
SS ☑ FLS ☑ ACS ☒ CG ☐
DATE: 03/26/2021

STRUCTURE TYPE:
HEXAGON
DSA
SIZE: MAXIMUM
Ø40' x 15'e MAX.

SCALE : NONE

DRAWING SIZE:
D

PRE-CHECK (PC) DOCUMENT
Code : 2019 CBC
A separate project application for construction is required.

Eng. By :	JO	08/15/20
Design By :	MP	08/15/20
Approved By :	JO	08/15/20

DRAWING DESCRIPTION:
PRODUCT INFORMATION

DWG. DSA60340-19

SHEET 26.1-1000

REV. NC

ENVELOPE JOINT REACTIONS

Shear resultant = $\sqrt{Px^2 + Py^2 + Pz^2}$ Moment resultant = $\sqrt{Mx^2 + My^2 + Mz^2}$

ASD REACTIONS

Node No.		Support Forces [kip] P_x	P_y	P_z	Support Moments [kipft] M_x	M_y	M_z		Support Forces [kip] SHEAR RESULTANT	Support Moments [kipft] MOMENT RESULTANT	Support Forces [kip] UPLIFT	Support Forces [kip] AXIAL
						MAXIMUM REACTIONS			1.153	10.904	0.866	-2.333
Node No.		Support Forces [kip] P_x	P_y	P_z	Support Moments [kipft] M_x	M_y	M_z					
1	Max	1.121	0.566	0.794	0.003	10.527	0.927					
	Min	-0.256	0.000	-2.333	-7.030	-1.462	-0.694					
	Max P_x	**1.121**	0.000	0.608	-0.001	10.527	0.000	CO 33	1.121	10.527	0.608	
	Min P_x	**-0.256**	0.119	-1.901	-1.108	-1.462	0.661	CO 11	0.282	1.834		-1.901
	Max P_y	0.664	**0.566**	0.794	-7.030	5.587	-0.532	CO 34	0.872	8.980	0.794	
	Min P_y	0.437	**0.000**	-1.976	0.003	6.789	-0.001	CO 31	0.437	6.789		-1.976
	Max P_z	0.664	0.566	**0.794**	-7.030	5.587	-0.532	CO 34	0.872	8.980	0.794	
	Min P_z	0.165	0.000	**-2.333**	0.000	4.037	-0.001	CO 10	0.165	4.037		-2.333
	Max M_x	0.437	0.000	-1.976	**0.003**	6.789	-0.001	CO 31	0.437	6.789		-1.976
	Min M_x	0.664	0.566	0.794	**-7.030**	5.587	-0.532	CO 34	0.872	8.980	0.794	
	Max M_y	1.121	0.000	0.608	-0.001	**10.527**	0.000	CO 33	1.121	10.527	0.608	
	Min M_y	-0.256	0.119	-1.901	-1.108	**-1.462**	0.661	CO 11	0.282	1.834		-1.901
	Max M_z	-0.077	0.150	-1.370	-1.338	-0.121	**0.927**	CO 3	0.169	1.343		-1.370
	Min M_z	0.723	0.502	0.762	-6.238	6.060	**-0.694**	CO 5	0.880	8.697	0.762	
9	Max	0.873	1.110	0.763	1.047	9.494	0.668					
	Min	-0.098	-0.169	-2.225	-10.715	-0.602	-1.237					
	Max P_x	**0.873**	0.478	0.595	-3.416	9.494	0.513	CO 33	0.995	10.090	0.595	
	Min P_x	**-0.098**	-0.169	-1.265	1.038	-0.596	0.000	CO 1	0.195	1.197		-1.265
	Max P_y	0.311	**1.110**	0.763	-10.715	2.020	-0.284	CO 34	1.153	10.904	0.763	
	Min P_y	-0.098	**-0.169**	-1.265	1.038	-0.596	0.000	CO 1	0.195	1.197		-1.265
	Max P_z	0.311	1.110	**0.763**	-10.715	2.020	-0.284	CO 34	1.153	10.904	0.763	
	Min P_z	-0.009	0.077	**-2.225**	-2.465	0.993	0.386	CO 11	0.078	2.657		-2.225
	Max M_x	-0.095	-0.164	-1.065	**1.047**	-0.602	0.000	CO 30	0.190	1.208		-1.065
	Min M_x	0.311	1.110	0.763	**-10.715**	2.020	-0.284	CO 34	1.153	10.904	0.763	
	Max M_y	0.873	0.478	0.595	-3.416	**9.494**	0.513	CO 33	0.995	10.090	0.595	
	Min M_y	-0.095	-0.164	-1.065	1.047	**-0.602**	0.000	CO 30	0.190	1.208		-1.065
	Max M_z	0.806	0.465	0.481	-3.144	8.518	**0.668**	CO 4	0.931	9.080	0.481	
	Min M_z	0.167	0.194	-1.445	-3.322	1.949	**-1.237**	CO 2	0.256	3.852		-1.445
15	Max	0.873	0.651	0.866	3.416	9.496	1.236					
	Min	-0.230	-0.478	-1.959	-6.047	-2.193	-0.668					
	Max P_x	**0.873**	-0.478	0.595	3.416	9.496	-0.513	CO 33	0.995	10.092	0.595	
	Min P_x	**-0.230**	0.540	-1.642	-5.184	-2.180	0.286	CO 11	0.587	5.624		-1.642
	Max P_y	-0.079	**0.651**	-0.712	-6.047	-0.595	0.076	CO 17	0.656	6.076		-0.712
	Min P_y	0.873	**-0.478**	0.595	3.416	9.496	-0.513	CO 33	0.995	10.092	0.595	
	Max P_z	0.429	-0.255	**0.866**	1.335	4.204	-0.318	CO 5	0.499	4.411	0.866	
	Min P_z	0.033	0.043	**-1.959**	1.120	0.907	0.869	CO 10	0.054	1.441		-1.959
	Max M_x	0.873	-0.478	0.595	**3.416**	9.496	-0.513	CO 33	0.995	10.092	0.595	
	Min M_x	-0.079	0.651	-0.712	**-6.047**	-0.595	0.076	CO 17	0.656	6.076		-0.712
	Max M_y	0.873	-0.478	0.595	3.416	**9.496**	-0.513	CO 33	0.995	10.092	0.595	
	Min M_y	-0.200	0.540	-1.197	-5.731	**-2.193**	0.375	CO 7	0.576	6.136		-1.197
	Max M_z	0.167	-0.195	-1.445	3.326	1.951	**1.236**	CO 2	0.257	3.856		-1.445
	Min M_z	0.806	-0.465	0.481	3.143	8.519	**-0.668**	CO 4	0.931	9.080	0.481	
69	Max	0.561	1.110	0.763	2.682	5.343	0.823					
	Min	-0.311	-0.309	-2.225	-10.714	-2.405	-0.707					
	Max P_x	**0.561**	-0.082	-0.635	0.574	5.343	-0.132	CO 16	0.567	5.374		-0.635
	Min P_x	**-0.311**	1.110	0.763	-10.714	-2.019	0.283	CO 34	1.153	10.903	0.763	
	Max P_y	-0.311	**1.110**	0.763	-10.714	-2.019	0.283	CO 34	1.153	10.903	0.763	
	Min P_y	0.359	**-0.309**	-1.568	2.682	3.495	-0.519	CO 10	0.474	4.405		-1.568
	Max P_z	-0.311	1.110	**0.763**	-10.714	-2.019	0.283	CO 34	1.153	10.903	0.763	
	Min P_z	0.009	0.077	**-2.225**	-2.465	-0.992	0.386	CO 11	0.078	2.657		-2.225
	Max M_x	0.359	-0.309	-1.568	**2.682**	3.495	-0.519	CO 10	0.474	4.405		-1.568
	Min M_x	-0.311	1.110	0.763	**-10.714**	-2.019	0.283	CO 34	1.153	10.903	0.763	
	Max M_y	0.561	-0.082	-0.635	0.574	**5.343**	-0.132	CO 16	0.567	5.374		-0.635
	Min M_y	-0.136	0.347	-1.799	-4.994	**-2.405**	-0.551	CO 3	0.373	5.543		-1.799
	Max M_z	0.209	0.673	0.688	-6.569	3.809	**0.823**	CO 4	0.705	7.593	0.688	
	Min M_z	0.355	-0.196	-0.929	2.120	3.812	**-0.707**	CO 2	0.406	4.362		-0.929
75	Max	0.561	0.651	0.866	6.569	5.344	0.707					
	Min	-0.429	-0.673	-1.642	-6.047	-4.203	-0.823					
	Max P_x	**0.561**	0.082	-0.635	-0.574	5.344	0.132	CO 16	0.567	5.375		-0.635
	Min P_x	**-0.429**	-0.255	0.866	1.334	-4.203	0.319	CO 5	0.499	4.410	0.866	
	Max P_y	0.079	**0.651**	-0.712	-6.047	0.595	-0.076	CO 17	0.656	6.076		-0.712
	Min P_y	0.209	**-0.673**	0.688	6.569	3.809	-0.823	CO 4	0.705	7.593	0.688	
	Max P_z	-0.429	-0.255	**0.866**	1.334	-4.203	0.319	CO 5	0.499	4.410	0.866	
	Min P_z	0.230	0.540	**-1.642**	-5.184	2.179	-0.286	CO 11	0.587	5.623		-1.642
	Max M_x	0.209	-0.673	0.688	**6.569**	3.809	-0.823	CO 4	0.705	7.593	0.688	
	Min M_x	0.079	0.651	-0.712	**-6.047**	0.595	-0.076	CO 17	0.656	6.076		-0.712
	Max M_y	0.561	0.082	-0.635	-0.574	**5.344**	0.132	CO 16	0.567	5.375		-0.635
	Min M_y	-0.429	-0.255	0.866	1.334	**-4.203**	0.319	CO 5	0.499	4.410	0.866	
	Max M_z	0.355	0.196	-0.929	-2.119	3.809	**0.707**	CO 2	0.406	4.359		-0.929
	Min M_z	0.209	-0.673	0.688	6.569	3.809	**-0.823**	CO 4	0.705	7.593	0.688	
83	Max	0.710	0.565	0.838	0.002	7.929	0.694					
	Min	-0.723	0.000	-1.901	-7.027	-6.059	-0.927					
	Max P_x	**0.710**	0.000	-1.077	-0.001	7.929	0.000	CO 6	0.710	7.929		-1.077
	Min P_x	**-0.723**	0.502	0.762	-6.236	-6.059	0.694	CO 5	0.880	8.695	0.762	
	Max P_y	-0.664	**0.565**	0.793	-7.027	-5.586	0.532	CO 34	0.872	8.977	0.793	
	Min P_y	-0.059	**0.000**	0.640	0.002	0.668	0.000	CO 33	0.059	0.668	0.640	

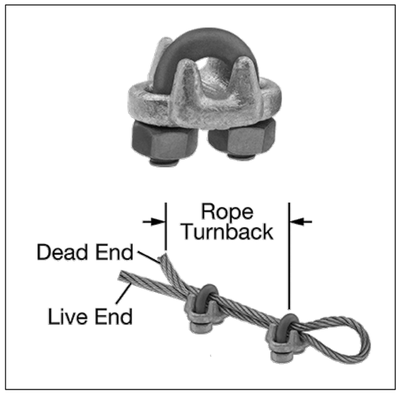

FORGED WIRE ROPE CLAMP

FITTING TYPE ROPE CLAMP
FABRICATION: FORGED
MATERIAL: GALVANIZED STEEL
FOR WIRE ROPE DIAMETER 3/8"
NUMBER OF CLAMPS REQUIRED: 2
ROPE TURNBACK: 6 1/2"
FOR WIRE ROPE CONSTRUCTION 7 × 19
ATTACHMENT TYPE: LOOP
CLAMP-WIDTH 2", HEIGHT 1 15/16", THICKNESS 1 11/16"
REQUIRED INSTALLATION TOOL TORQUE WRENCH
REQUIRED TORQUE 45 FT.-LBS.
CAPACITY 80% OF THE ROPE'S CAPACITY
SPECIFICATIONS MET ASME B30.26, FED. SPEC. FF-C-450

Aircraft Cable

Preformed, made in accordance with commercial specifications military and federal specification rope available.

Carbon Steel (Aircraft Cable) - Galvanized cable has the highest strength and greatest fatigue life of the materials offered. It has good to fair corrosion resistance in rural to industrial atmosphere environments. This material is most widely used for small diameter cables. Tin over galvanized cable offers greater corrosion resistance and reduced friction over pulleys.

7 x 19

7 x 19 Dia. (In)	Approx. Wt 1000 Ft/lbs	Galvanized Min. Breaking Strengths (lbs)
3/32	17.	1,000
1/8	29.	2,000
5/32	45.	2,800
3/16	65.	4,200
7/32	86.	5,600
1/4	110.	7,000
9/32	139.	8,000
5/16	173.	9,800
3/8	243.	14,400

Multiknit INTERNATIONAL

190/F5 Fire rated specifications

Standard range

Revision 0 28-Oct-12

Colour	Shade %	UV Block %	Average GSM	Average Warp break strength kgs	Average Elongation %	Average Weft break strength kgs	Average Elongation %	Average Burst Kpa	Average Burst to Mass ratio
Desert Sand	80	92	185	50	40	72	73	156	0.84
Blue	80	85	185	50	40	72	73	156	0.84
Brown	85		185	50	40	72	73	156	0.84
Green	80	85	185	50	40	72	73	156	0.84
Red	80	86	185	50	40	72	73	156	0.84
Silver	80	81	185	50	40	72	73	156	0.84
Terracotta	75	82	185	50	40	72	73	156	0.84
Yellow	80	89	185	50	40	72	73	156	0.84
				110 LB		159 LB		3258 PSF	

CONVERSION TO IMPERIAL UNITS:
185 GSM = .0378 psf
50 KGS = 110 Lb
72 KGS = 159 Lb
156 Kpa = 3258 psf

Notes:
- 190/F5 conforms to The California State Fire Marshal Title 19 Test for Small scale Fabrics
- Tear tests are done using a 50mm wide strip and a cross head speed of 500mm/min
- This report has been compiled using the mean results from all tests conducted on the given sample by our Quality Control Laboratory. the information provided is considered to be a good reflection of the relevant properties of the fabric tested. These results must only be used as an indication of the quality and characteristics of the fabric tested.
Company cannot be held responsible or liable in any way whatsoever should this information differ to that of a registered testing institution.

pp
Deon Joubert
General Manager - Multiknit (Pty) Ltd

Tommy Rogers
Managing Director - Multiknit (Pty) Ltd

ENVELOPE JOINT REACTIONS

Shear resultant = $\sqrt{Px^2 + Py^2 + Pz^2}$ Moment resultant = $\sqrt{Mx^2 + My^2 + Mz^2}$

ASD REACTIONS

Node No.		Support Forces [kip] P_x	P_y	P_z	Support Moments [kipft] M_x	M_y	M_z		Support Forces [kip] SHEAR RESULTANT	Support Moments [kipft] MOMENT RESULTANT	Support Forces [kip] UPLIFT	Support Forces [kip] AXIAL
						MAXIMUM REACTIONS			1.153	10.904	0.866	-2.333
	Max P_z	-0.314	0.000	**0.838**	0.002	-2.180	0.000	CO 4	0.314	2.180	0.838	
	Min P_z	0.256	0.119	**-1.901**	-1.109	1.462	-0.661	CO 11	0.282	1.835		-1.901
	Max M_x	-0.059	0.000	0.640	**0.002**	0.668	0.000	CO 33	0.059	0.668	0.640	
	Min M_x	-0.664	0.565	0.793	**-7.027**	-5.586	0.532	CO 34	0.872	8.977	0.793	
	Max M_y	0.710	0.000	-1.077	-0.001	**7.929**	0.000	CO 6	0.710	7.929		-1.077
	Min M_x	-0.723	0.502	0.762	-6.236	**-6.059**	0.694	CO 5	0.880	8.695	0.762	
	Max M_z	0.710	0.000	-1.077	-0.001	**7.929**	0.000	CO 6	0.710	7.929		-1.077
	Min M_z	0.077	0.150	-1.370	-1.339	0.121	**-0.927**	CO 3	0.169	1.344		-1.370

BASIC LOAD CASES

DEAD LOAD	0.0378 PSF (FABRIC)
FLOOR LIVE LOAD	N/A
ROOF LIVE LOAD	5 PSF
ROOF SNOW LOAD	5 PSF
SUPERIMPOSED LOADS	N/A
WIND LOAD	
BASIC DESIGN WIND SPEED (3 SEC GUST)	115 MPH
VELOCITY PRESSURE qz	25.32 PSF
COMPONENT AND CLADDING qz (CABLE AND CABLE HARDWARE ONLY)	25.32 PSF
SEISMIC LOAD	
SEISMIC RESPONSE COEFFICIENTS Cs	1.6
DESIGN BASE SHEAR	4014 LB

LICENSED ARCHITECT DAVID HIGGINSON NO.C19188 REN. 10-31-21 STATE OF CALIFORNIA

REGISTERED PROFESSIONAL ENGINEER MARK ALBERICO No. 36933 STRUCTURAL STATE OF CALIFORNIA

THESE PLANS AND SPECIFICATIONS ARE THE PROPERTY OF USA SHADE AND FABRIC STRUCTURES AND SHALL NOT BE REPRODUCED WITHOUT THEIR WRITTEN PERMISSION.

USA SHADE & Fabric Structures
CORPORATE HEADQUARTERS
2580 ESTERS BLVD. SUITE 100
DFW AIRPORT, TX, 75261
800-966-5005

CERTIFICATIONS:
IAS CERTIFICATION No: FA-428
CLARK COUNTY MANUFACTURER CERTIFICATION NUMBER (NEVADA): 355

CUSTOMER:
College of the Sequoias

PROJECT NAME:
Tulare Campus

LOCATION:
4999 E. Bardsley Ave
Tulare, CA 93274

MODEL NUMBER:
DSA60340-19

APPROVED
DIV. OF THE STATE ARCHITECT
APP: 04-119454 PC
REVIEWED FOR
SS ☑ FLS ☑ ACS ☑ CG ☐
DATE: 03/26/2021

STRUCTURE TYPE:
HEXAGON
DSA
SIZE: MAXIMUM
Ø40' x 15'e MAX.

SCALE : NONE

DRAWING SIZE: D

PRE-CHECK (PC) DOCUMENT
Code : 2019 CBC
A separate project application for construction is required.

Eng. By :	JO	08/15/20
Design By :	MP	08/15/20
Approved By :	JO	08/15/20

DRAWING DESCRIPTION:
REACTIONS

DWG. DSA60340-19

SHEET 26.2-2000

REV. NC

GENERAL NOTES

1. ALL DIMENSIONS, CONDITIONS AND ELEVATIONS ARE TO BE FIELD VERIFIED BY THE CONTRACTOR PRIOR TO COMMENCING WORK OR FABRICATION. IF ANY DISCREPANCIES ARE FOUND OR IF ANY CONDITION EXISTS NOT AS SHOWN ON THE DRAWINGS THE ENGINEER SHALL BE NOTIFIED IMMEDIATELY.

2. THE CONTRACTOR WILL HOLD HARMLESS, INDEMNIFY AND DEFEND THE OWNER, THE ENGINEER, AND HIS CONSULTANTS, AND EACH OF THEIR OFFICERS AND EMPLOYEES AND AGENTS, FROM ANY AND ALL LIABILITY CLAIMS, LOSSES OR DAMAGE ARISING OR ALLEGED TO ARISE FROM THE PERFORMANCE OF THE WORK DESCRIBED HEREIN, BUT NOT INCLUDING THE SOLE NEGLIGENCE OF THE OWNER, THE ENGINEER AND HIS CONSULTANTS, AND EACH OF THEIR OFFICERS AND EMPLOYEES AND AGENTS.

3. THE CONTRACT DRAWINGS AND SPECIFICATIONS REPRESENT THE DESIGN INTENT. UNLESS OTHERWISE SHOWN, THEY DO NOT INDICATE THE METHOD OF CONSTRUCTION. THE CONTRACTOR SHALL SUPERVISE AND DIRECT THE WORK AND HE SHALL BE SOLELY RESPONSIBLE FOR ALL CONSTRUCTION MEANS, METHODS, TECHNIQUES, SEQUENCES, AND PROCEDURES.

IN ACCORDANCE WITH GENERALLY ACCEPTED CONSTRUCTION PRACTICES, THE CONTRACTOR WILL BE SOLELY AND COMPLETELY RESPONSIBLE FOR THE CONDITIONS OF THE JOB SITE, INCLUDING SAFETY OF ALL PERSONS AND PROPERTY DURING PERFORMANCE OF THE WORK. THIS REQUIREMENT WILL APPLY CONTINUOUSLY AND NOT BE LIMITED TO NORMAL WORKING HOURS.

ALL WORK SHALL CONFORM TO THE LATEST APPLICABLE CONSTRUCTION SAFETY REQUIREMENTS OF O.S.H.A. AND ANY OTHER GOVERNMENTAL ENTITY HAVING JURISDICTION.

4. THE DUTY OF THE ENGINEER TO CONDUCT CONSTRUCTION REVIEW OF THE CONTRACTOR'S PERFORMANCE IS NOT INTENDED TO INCLUDE REVIEW OF THE ADEQUACY OF THE CONTRACTOR'S SAFETY MEASURES, IN, ON, OR NEAR THE CONSTRUCTION SITE.

5. ANY SUPPORT SERVICES PERFORMED BY THE ENGINEER OR HIS REPRESENTATIVES DURING CONSTRUCTION SHALL BE DISTINGUISHED FROM CONTINUOUS AND DETAILED INSPECTION SERVICES WHICH ARE FURNISHED BY OTHERS. THESE SUPPORT SERVICES PERFORMED BY THE ENGINEER WHETHER OF MATERIAL OR WORK AND WHETHER PERFORMED PRIOR TO, DURING, OR AFTER COMPLETION OF CONSTRUCTION ARE PERFORMED SOLELY FOR THE PURPOSE OF ASSISTING IN QUALITY CONTROL AND IN ACHIEVING CONFORMANCE WITH CONTRACT DRAWINGS AND SPECIFICATION, BUT THEY DO NOT GUARANTEE THE CONTRACTOR'S PERFORMANCE AND SHALL NOT BE CONSTRUED AS SUPERVISION OF CONSTRUCTION.

6. ANY CHANGES TO THE APPROVED SET OF PLANS WITHOUT NOTIFYING THE ENGINEER PRIOR TO SUCH CHANGES ABSOLVES SAID ENGINEER FROM ANY AND ALL RESPONSIBILITY WITH RESPECT TO LIABILITY, DAMAGE OR EXTRA WORK RESULTING FROM SAID CHANGES.

7. NOTES AND DETAILS ON THE DRAWINGS SHALL TAKE PRECEDENCE OVER THESE GENERAL NOTES.

8. THE TYPICAL DETAILS SHOWN ON THESE SHEETS SHALL APPLY IN ALL CASES UNLESS SPECIFICALLY SHOWN OTHERWISE. WHERE NO DETAIL IS SHOWN, CONSTRUCTION SHALL BE AS SHOWN FOR OTHER SIMILAR WORK.

9. DESIGN LOADS: RISK CATEGORY II OR RISK CATEGORY III
ROOF LIVE LOAD: 20 PSF ROOF DEAD LOAD: 3 PSF
SNOW LOAD: $P_g = P_f = 20$ PSF & 30 PSF $C_e = 1.1$ $C_t = 1.2$ $C_s = 1.0$
$I_s = 1.0$ RISK CATEGORY II $I_s = 1.1$ RISK CATEGORY III

SEISMIC: $I_E = 1.0$ AT RISK CATEGORY II $I_E = 1.25$ AT RISK CATEGORY III

SEISMIC DESIGN CATEGORY = E $\rho = 1.3$ FOR OFFSET CONFIGURATION

STRUCTURE IS A STEEL ORDINARY CANTILEVERED COLUMN SYSTEM (G2 PER ASCE7-16)
R = 1.25/0.7 (FOR WORKING STRESS)
$C_o = 1.25$ $C_d = 1.25$
SOIL SITE CLASS = D
FOR 12' COLUMN HEIGHT T = 0.361
FOR 14' COLUMN HEIGHT T = 0.45
FOR 16' COLUMN HEIGHT T = 0.497

BASE SHEAR: V = Cs x W
RISK CATEGORY I V = 0.728W (ASD) FOR S_{DS} = 1.0
LOW SEISMIC & RC III V=0.728W (ASD) FOR S_{DS}=0.8
RISK CATEGORY II V = 1.82W (ASD) FOR S_{DS} = 2.5
HIGH SEISMIC & RC III V=1.82W (ASD) FOR S_{DS}=2.0

WIND LOAD: 135 MPH, EXPOSURE C Kd = 0.85
RISK CATEGORY II OR RISK CATEGORY III Kz = 0.90 Kzt = 1.0 Ke = 1.00

$q_h = 21.42$ ($q_h = 0.00256 \times Kz \times Ke \times Kzt \times Kd \times V^2 \times 0.6$ (FOR WORKING STRESS))

MAXIMUM BASIC WIND LOAD FOR PROJECT LOCATED IN SPECIAL WIND REGIONS SHALL BE EQUAL TO OR LESS THAN 135 mph AND CONFORM WITH THE ADOPTED ORDINANCE OF THE CITY, COUNTY OR CITY AND COUNTY IN WHICH THE PROJECT SITE IS LOCATED AND SHALL BE APPROVED BY DSA-SS.

10. GOVERNING CODE: 2019 CBC

11. ALLOWABLE SOIL BEARING IS BASED ON 1500 PSF & 100 PCF x2 PASSIVE PRESSURE PER CBC TABLE 1806A.2 & SECTION 1806A.3.4. SKIN FRICTION IS PER 1810A.3.3.1.4 & IS EQUAL TO 1500/6=250 PSF. FOR UPLIFT SKIN FRICTION SHALL BE 125 PSF (S.F. OF 2). 1/3 INCREASE WAS NOT USED FOR ANY VALUES.

12. ALL WORK TO BE PERFORMED UNDER THE CONTINUOUS INSPECTION OF A D.S.A. APPROVED INSPECTOR.

13. ALL WORK SHALL CONFORM TO TITLE 24, CALIFORNIA CODE OF REGULATIONS (CCR).

14. CHANGES TO THE APPROVED DRAWINGS AND SPECIFICATIONS SHALL BE MADE BY AN ADDENDA OR A CONSTRUCTION CHANGE DOCUMENT APPROVED BY THE DIVISION OF THE STATE ARCHITECT, AS REQUIRED BY SECTION 4-338, PART 1, TITLE 24, CCR AND THE ENGINEER.

15. A PROJECT INSPECTOR EMPLOYED BY THE DISTRICT (OWNER) AND APPROVED BY THE OFFICE OF THE STATE ARCHITECT SHALL PROVIDE CONTINUOUS INSPECTION OF THE WORK. THE DUTIES OF THE INSPECTOR ARE DEFINED IN SECTION 4-342, PART 1, TITLE 24, CCR.

FOUNDATION NOTES

1. ALL FOOTINGS SHALL EXTEND TO FIRM BEARING IN UNDISTUBED SOIL OR ENGINEERED FILL.

2. NOMINAL TOP OF FLOOR SLAB ELEVATION = DATUM +0'-0" UNLESS OTHERWISE NOTED.

3. ANY EXISTING FILL AT THE BUILDING PAD SHALL MEET THE 92% COMPACTION REQUIREMENTS. ALL ORGANIC MATERIAL, RUBBLE, OR OTHER DELETERIOUS MATERIAL SHALL BE REMOVED FROM THE SITE.

4. SEE ARCHITECTURAL DRAWINGS FOR LOCATION AND EXTENT OF EXTERIOR WALKWAYS.

5. ALL REINFORCING STEEL, ANCHOR BOLTS, AND OTHER EMBEDDED ITEMS SHALL BE SECURELY POSITIONED IN THE FORMS PRIOR TO POURING OF CONCRETE.

6. SHORING AND BRACING: IT SHALL BE THE CONTRACTOR'S RESPONSIBILITY TO DESIGN AND PROVIDE ADEQUATE SHORING, BRACING, AND FORM WORK AS REQUIRED FOR THE CONSTRUCTION OF THIS BUILDING. PROVIDE TEMPORARY BRACING AS REQUIRED TO HOLD THE VARIOUS ELEMENTS IN PLACE UNTIL FINAL SUPPORT IS SECURELY ANCHORED.

7. EXCAVATION: THE CONTRACTOR SHALL BE RESPONSIBLE FOR ALL EXCAVATION PROCEDURES AND FOR PROTECTION OF ADJACENT PROPERTY, STRUCTURES, STREETS, AND UTILITIES IN ACCORDANCE WITH THE LOCAL BUILDING DEPARTMENT.

8. BACKFILL: DO NOT BACKFILL AROUND THE EXTERIOR PERIMETER WALL UNTIL AFTER THE WALLS ARE SUPPORTED BY THE COMPLETION OF INTERIOR FLOOR SYSTEMS. IF THE FLOOR SLABS ARE CONCRETE, DO NOT BACKFILL UNTIL 7 DAYS MINIMUM AFTER COMPLETION OF THE FLOOR SLABS. DO NOT BACKFILL UNTIL AFTER COMPLETION AND INSPECTION OF DAMP-PROOFING.

CONCRETE NOTES

1. ALL MOLDS, ORNAMENTS, GROOVES, ETC. SHOWN ON THE ARCHITECTURAL DRAWINGS SHALL BE PROVIDED FOR IN THE FORM WORK BEFORE THE CONCRETE IS POURED.

2. ALL REINFORCING STEEL, ANCHOR BOLTS, DOWELS AND OTHER EMBEDS SHALL BE IN PLACE AND SECURED TO FORM WORK PRIOR TO POURING OF CONCRETE.

3. REFER TO BOTH ARCHITECTURAL AND MECHANICAL DRAWINGS FOR LOCATION OF PLUMBING FIXTURES.

4. NO PIPES OR DUCTS SHALL BE PLACED IN CONCRETE WALLS OR STRUCTURAL SLABS UNLESS SPECIFICALLY DETAILED.

5. CONSTRUCTION JOINTS NOT INDICATED ON THE DRAWINGS SHALL BE SO MADE AND LOCATED AS NOT TO IMPAIR THE STRENGTH OF THE STRUCTURE. PROVISION SHALL BE MADE FOR TRANSFER OF SHEAR AND OTHER FORCES THROUGHOUT THE JOINTS. THE CONTRACTOR SHALL OBTAIN THE ARCHITECTS APPROVAL OF CONSTRUCTION JOINT LOCATION IN ALL STRUCTURAL SLAB, BEAMS AND SHEAR WALLS.

6. SIDES OF FOOTINGS MAY BE POURED AGAINST STABLE EARTH.

7. THE QUALITY AND DESIGN OF CONCRETE SHALL COMPLY WITH TITLE 24 PART 2 EXCEPT ITEMS NOT SPECIFICALLY COVERED THEREIN SHALL CONFORM TO ACI 318.

8. ALL REINFORCING SHALL BE NEW STOCK DEFORMED BARS CONFORMING TO ASTM A615.

A. #4 BARS AND SMALLER..... GRADE 40 OR 60
B. #5 BARS AND LARGER..... GRADE 60
C. SEPARATE BARS 1-1/2 DIAMETERS CLEAR OR 1-1/2" CLEAR, WHICHEVER IS LARGER.

9. MINIMUM CONCRETE COVER FOR REINFORCING SHALL BE AS FOLLOWS:
CAST AGAINST EARTH (EXCEPT SLABS ON GRADE)..... 3"
SLABS ON GRADE..... 1-1/2"
EXPOSED TO EARTH OR WEATHER
#5 BARS AND SMALLER..... 1-1/2"
#6 BARS AND LARGER..... 2"
NOT EXPOSED TO WEATHER OR IN CONTACT WITH GROUND
SLABS, WALLS, JOISTS
#11 BARS AND SMALLER..... 3/4"
#14 AND #18 BARS..... 1-1/2"
BEAMS, GIRDERS, COLUMNS
PRINCIPAL REINFORCING, TIES
STIRRUPS, OR SPIRALS..... 1-1/2"
SHELLS AND FOLDED PLATE MEMBERS
#5 BARS AND SMALLER..... 1/2"
#6 BARS AND LARGER..... 3/4"

10. CONCRETE SHALL HAVE FOLLOWING MINIMUM REQUIREMENTS.
F0= 3000 PSI AT 28 DAYS & MAXIMUM WATER TO CEMENT RATIO OF 0.5.
F2= 4500 PSI AT 28 DAYS & MAXIMUM WATER TO CEMENT RATIO OF 0.45 & MINIMUM AIR CONTENT OF 7%.

11. THE ENGINEER DOES NOT PROVIDE CONTRACT ADMINISTRATION FOR THE PROJECT, INCLUDING REVIEW OF CONCRETE MIXES.

12. PER ACI SECTION 19.3.2.1. FOOTING SHALL NOT BE EXPOSED TO FREEZING AND THAWING CYCLES, SHALL NOT BE EXPOSED TO WATER-SOLUBLE SULFATE IN SOIL BY PERCENT OF MASS 20.10%, SHALL NOT BE EXPOSED TO EXTERNAL SOURCE OF CHOLORIDES.

STRUCTURAL STEEL NOTES

1. ALL STRUCTURAL STEEL EXCEPT W SHAPES SHALL CONFORM TO ASTM A-36 AND SHALL BE FABRICATED AND ERECTED AS PER AISC SPECIFICATIONS FOR BUILDINGS. W SHAPES SHALL CONFORM TO ASTM A992.

2. STRUCTURAL PIPE SHALL CONFORM TO ASTM A-53 GRADE "B" AND STRUCTURAL TUBING SHALL CONFORM TO ASTM A-500 GRADE "B", F_y=46KSI.

3. ALL LIGHT GAGE STEEL TO CONFORM TO ASTM A653 GRADE 55 FOR ALL STRUCTURAL SHAPES, A653 GRADE 33 FOR ALL BLOCKING, FLASHINGS, MISCELLANEOUS CONNECTION PLATES, AND ANGLES.

4. ALL UNFINISHED BOLTS SHALL BE ASTM A-307 UNLESS NOTED OTHERWISE.

5. USE AISC USUAL GAGES FOR BOLT HOLES IN ALL STEEL SECTIONS UNLESS OTHERWISE NOTED.

6. THE STEEL FABRICATOR SHALL PROVIDE ADEQUATE TEMPORARY BRACING FOR ERECTION.

7. ALL BOLT HOLES ARE TO BE $^1/_{16}$" OVERSIZED. ALL BOLTS SHALL HAVE WASHERS INSTALLED UNDER BOTH HEAD & NUT.

8. ALL STEEL SHALL BE PROTECTED FROM WEATHER AS FOLLOWS: STRUCTURAL STEEL SHALL BE HOT-DIP GALVANIZED (MINIMUM ASTM A123 OR A153, CLASS D) OR PAINTED WITH ZINC-RICH PRIMER, UNDERCOAT, AND FINISH COAT; OR EQUIVALENT PAINT SYSTEM. COLD-FORMED STEEL MEMBERS SHALL BE 55% ALUMINUM-ZINC ALLOY COATED PER ASTM A792/A792M STANDARD IN ACCORDANCE TO AISI S200 TABLE A4-1, CP 90 COATING DESIGNATION.

ALL EXPOSED STEEL FASTENERS, INCLUDING CAST-IN-PLACE ANCHOR BOLTS/RODS, SHALL BE STAINLESS STEEL (TYPE 304 MINIMUM), HOT-DIP GALVANIZED (ASTM A153, CLASS D MINIMUM), OR STAINLESS STEEL (TYPE 304 MINIMUM), HOT-DIP GALVANIZED (ASTM A153, CLASS D MINIMUM), OR PROTECTED WITH CORROSION-PREVENTIVE COATING THAT DEMONSTRATED NO MORE THAN 2% OF RED RUST IN MINIMUM 1,000 HOURS OF EXPOSURE IN SALT SPRAY TEST PER ASTM B117. ZINC-PLATED FASTENERS DO NOT COMPLY WITH THIS REQUIREMENT. (EXAMPLE PROPRIETARY COATINGS THAT DO COMPLY WITH THE 1,000 HOUR REQUIREMENT INCLUDE BUT ARE NOT NECESSARILY LIMITED TO: QUIK GUARD BY SIMPSON, KWIK-COTE BY HILTI, STALGARD BY ELCO, VISTACORR BY SFS INTEC, ETC.)

GOVERNING CODES:

1. 2019 CALIFORNIA BUILDING STANDARDS ADMINISTRATIVE CODE (PART 1, TITLE 24, CCR).
2. 2019 CALIFORNIA BUILDING CODE, VOLUMES 1 & 2 (PART 2, TITLE 24, CCR).
3. 2019 CALIFORNIA ELECTRICAL CODE (PART 3, TITLE 24, CCR).
4. 2019 CALIFORNIA FIRE CODE (PART 9, TITLE 24, CCR).

NOTES

1. COVERS ARE NOT DESIGNED TO BE ENCLOSED OR FOR STORAGE OF COMBUSTIBLE MATERIALS.
2. WALKWAY COVER HAS BEEN CHECKED FOR OBSTRUCTED WIND FLOW CONDITION & CAN BE WITHIN 6" MIN. FROM AN EXISTING BUILDING.
3. WALKWAY PIER FOOTING HAS BEEN CHECKED FOR D.S.A. BULLETIN 09-06 REV..
4. ALL WORK SHALL COMPLY WITH C.F.C. CHAPTER 33 DURING CONSTRUCTION.

TESTING & INSPECTIONS REQUIRMENTS

1. INSPECTOR CLASS (MINIMUM REQUIREMENTS)
CLASS 2
2. SELECTION OF THE PROJECT INSPECTOR AND TESTING AGENCY
BY THE SCHOOL DISTRICT AND APPROVED BY D.S.A., A/E OF RECORD AND STRUCTURAL ENGINEER
3. COST OF THE PROJECT INSPECTOR (CA ADMIN. CODE 4-333(B) AND TESTING AGENCY (CA ADMIN. CODE 4-335)
BY THE SCHOOL DISTRICT
4. COPIES OF THE REPORT TO
ARCHITECT; STRUCTURAL ENGINEER; SCHOOL DISTRICT; D.S.A. (ORIGINAL); IOR; MANUFACTURER

NOTICE OF DISCLAIMER FOR STRUCTURAL ENGINEERING RESPONSIBILITY

1. PER TITLE 24, PART 1, SECTION 4-316 (D & E) OF THE CALIFORNIA CODE OF REGULATIONS, THE DISTRICT SHALL HIRE AN ARCHITECT OR STRUCTURAL ENGINEER TO BE IN GENERAL RESPONSIBLE CHARGE OF SITE SPECIFIC PROJECT.
2. FOR SITE SPECIFIC PROJECT GERARD HOMER & ASSOCIATES IS NOT THE DESIGN PROFESSIONAL IN GENERAL RESPONSIBLE CHARGE.
3. FOR SITE SPECIFIC PROJECT GERARD HOMER & ASSOCIATES RESPONSIBILITY IS LIMITED TO THE PREPARATION OF PLANS AND SPECIFICATIONS FOR A PORTION OF THE PROJECT AS DESIGNED BY THE ARCHITECT FOR INCORPORATION INTO THE PROJECT.
4. STRUCTURAL OBSERVATION OF CONSTRUCTION IS SPECIFICALLY EXCLUDED FROM GERARD HOMER & ASSOCIATES RESPONSIBILITY FOR SITE SPECIFIC PROJECT.

SHADE STRUCTURE TESTING & INSPECTION GUIDELINE

THE EXAMPLE FORM DSA-103 SHOWN ON THIS SHEET IS FOR ILLUSTRATION PURPOSES ONLY TO ASSIST IN THE COMPLETION OF FUTURE PROJECT-SPECIFIC FORM DSA-103. A FORM DSA-103 IS TO BE COMPLETED FOR EACH APPLICATION THAT THIS PC IS BEING INCORPORATED INTO AND THE EXAMPLE FORM DSA-103 IS TO BE CROSSED OUT ON THIS DRAWING.

DSA 103-19 LIST OF STRUCTURAL TESTS & SPECIAL INSPECTIONS - 2019 CBC

IMPORTANT: THIS FORM IS ONLY A SUMMARY LIST OF STRUCTURAL TESTS AND SOME OF THE SPECIAL INSPECTIONS REQUIRED FOR THE PROJECT. GENERALLY, THE STRUCTURAL TESTS AND INSPECTIONS NOTED ON THIS FORM ARE THOSE THAT WILL BE PERFORMED BY THE GEOTECHNICAL ENGINEER OF RECORD, LABORATORY OF RECORD, OR SPECIAL INSPECTOR. THE ACTUAL COMPLETE TEST AND INSPECTION PROGRAM MUST BE PERFORMED AS DETAILED ON THE DSA APPROVED DOCUMENTS. THE APPENDIX AT THE BOTTOM OF THIS FORM IDENTIFIES WORK NOT SUBJECT TO DSA REQUIREMENTS FOR SPECIAL INSPECTION OR STRUCTURAL TESTING. THE PROJECT INSPECTOR IS RESPONSIBLE FOR PROVIDING INSPECTION OF ALL FACETS OF CONSTRUCTION, INCLUDING BUT NOT LIMITED TO, SPECIAL INSPECTIONS NOT LISTED ON THIS FORM SUCH AS STRUCTURAL WOOD FRAMING, HIGH-LOAD WOOD DIAPHRAGMS, COLD-FORMED STEEL FRAMING, ANCHORAGE OF NON-STRUCTURAL COMPONENTS, ETC., PER TITLE 24, PART 2, CHAPTER 17A (2019 CBC).

**NOTE: UNDEFINED SECTION & TABLE REFERENCES FOUND IN THIS DOCUMENT ARE FROM THE CBC, OR CALIFORNIA BUILDING CODE.

NOTE: REFERENCES ARE TO THE 2019 EDITION OF THE CALIFORNIA BUILDING CODE (CBC) UNLESS OTHERWISE NOTED.

TEST OR SPECIAL INSPECTION
SOILS
1. GENERAL:
a. VERIFY THAT: SITE HAS BEEN PREPARED PROPERLY PRIOR TO PLACEMENT OF CONTROLLED FILL AND/OR EXCAVATIONS FOR FOUNDATIONS. FOUNDATION EXCAVATIONS ARE EXTENDED TO PROPER DEPTH AND HAVE REACHED PROPER MATERIAL. MATERIALS BELOW FOOTINGS ARE ADEQUATE TO ACHIEVE THE DESIGN BEARING CAPACITY.
4. CAST-IN-PLACE DEEP FOUNDATIONS (PIERS);
a. INSPECT DRILLING OPERATIONS AND MAINTAIN COMPLETE AND ACCURATE RECORDS FOR EACH PIER.
b. VERIFY PIER LOCATIONS, DIAMETERS, PLUMBNESS & LENGTHS. RECORD CONCRETE OR GROUT VOLUMES.
c. CONCRETE PIERS
CONCRETE
7. CAST IN PLACE CONCRETE
MATERIAL VERIFICATION AND TESTING:
a. VERIFY USE OF REQUIRED DESIGN MIX.
b. IDENTIFY, SAMPLE & TEST REINFORCING STEEL.
c. DURING CONCRETE PLACEMENT, FABRICATE SPECIMENS FOR STRENGTH TESTS, SLUMP & AIR CONTENT TESTS, AND DETERMINE THE TEMPERATURE OF THE CONCRETE.
d. TEST CONCRETE (COMPRESSION), f'c
INSPECTION:
e. BATCH PLANT INSPECTION - PERIODIC, DESIGN COMPLIES WITH 1705A.3.3.1 ITEM 2.
STEEL
17. STRUCTURAL STEEL, COLD-FORMED STEEL & ALUMINUM USED FOR STRUCTURAL PURPOSES
MATERIAL VERIFICATION & TESTING:
a. VERIFY IDENTIFICATION OF ALL MATERIALS AND: - MILL CERTIFICATES INDICATE MATERIAL PROPERTIES THAT COMPLY WITH REQUIREMENTS. - MATERIAL SIZES, TYPES AND GRADES COMPLY WITH REQUIREMENTS.
b. TEST UNIDENTIFIED MATERIALS.
c. EXAMINE SEAM WELDS OF HSS SHAPES
INSPECTION:
d. VERIFY AND DOCUMENT STEEL FABRICATION PER DSA-APPROVED CONSTRUCTION DOCUMENTS.

NOTICE OF DISCLAIMER FOR STRUCTURAL ENGINEERING RESPONSIBILITY

5. ALL CONSTRUCTION ACTIVITIES RELATED TO STRUCTURAL ENGINEERING SHALL BE DELEGATED TO A QUALIFIED ENGINEER BY THE DESIGN PROFESSIONAL IN GENERAL RESPONSIBLE CHARGE. THESE ACTIVITIES INCLUDE, BUT ARE NOT LIMITED TO APPROVAL OF INSPECTOR QUALIFICATIONS, STRUCTURAL OBSERVATION OF CONSTRUCTION, REVIEW OF INSPECTION REPORTS, AND SIGNING OFF THE VERIFIED REPORTS FOR COMPLETED WORK. GERARD HOMER & ASSOCIATES SHALL NOT BE LISTED ON THE DSA 1 OR BE REQUIRED TO SIGN A DSA 1.DEL.
6. GERARD HOMER & ASSOCIATES WILL BE RESPONSIBLE FOR RESPONDING TO QUESTIONS PERTAINING TO THE PLANS AND SPECIFICATIONS FOR THE SHELTER OF THE PC WHICH ARISE DURING PLAN CHECK AND CONSTRUCTION.
7. THE ARCHITECT OR DSA SHALL NOT ADD TO OR CHANGE THIS PC WITHOUT PERMISSION FROM GERARD HOMER & ASSOCIATES.

REVISIONS

NO.	DATE	BY	DESCRIPTION

REGISTERED PROFESSIONAL ENGINEER GERARD HOMER Exp. 3-31-22 S23373 STRUCTURAL STATE OF CALIFORNIA

PRE-CHECK (PC) DOCUMENT
CODE: 2019 C.B.C.
A SEPARATE PROJECT APPLICATION FOR CONSTRUCTION IS REQUIRED.

PROJECT: SINGLE POST WALKWAY COVER VALLEY SCHOOL SHELTERS

SHEET INDEX

S1 FOUNDATION PLANS, GENERAL NOTES, DETAILS
S2 ROOF FRAMING PLANS
S3 SECTION, TYPICAL ELEVATION, DETAILS
S4 SECTION, DETAIL

BUILDING DATA

A-3 OCCUPANCY
II-B CONSTRUCTION
ALLOW. AREA = 1500 SQ.FT. TABLE 503
HEIGHT = 8'-0" MIN. TO 16'-0" MAX. COLUMN HEIGHT

IDENTIFICATION STAMP
DIV. OF THE STATE ARCHITECT
APP: 02-118169 PC
REVIEWED FOR
SS [Z] FLS [Z] ACS [Z] OS [ ]
DATE: 01/07/2021

Gerard Homer and Associates
STRUCTURAL ENGINEERS
16765 SYPERT SCHOOL RD.
HOLLAND, TX. 76534
PH.: (559) 734-6675
Email: ghomerse@gmail.com

DWN BY: B.G.H. | CHKD BY: G.B.H.
DATE: 12/30/20
PROJECT NO: 19246 (19246-24 22111)
DRAWING TITLE
FOUNDATION PLAN
GENERAL NOTES
DETAILS
SHEET NUMBER **S1** OF 4 SHEETS

GENERAL NOTES

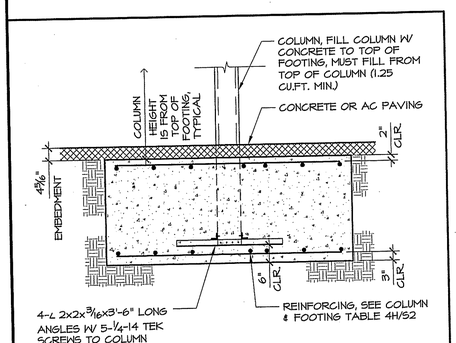

OPTIONAL SPREAD FOOTING @ ADDITIONAL COST — SCALE ½" = 1'-0" — 8B

SHEET INDEX & STRUCTURAL TESTS AND INSPECTIONS SHEET — 4K

SITE SPECIFIC INFORMATION TABLE

0.50	SEISMIC COEFFICIENT, Sds	SELECT OCCUPANT LOAD FACTOR (OLF)		DETERMINATION OF BAY SPACING FOR COVER NEXT TO RISK CATEGORY III & S_{DS} > 2.0
94	WIND SPEED (3 SEC. GUST) @ MPH	[X]	ASSEMBLY-CONCENTRATED (7 SQ. FT./OCCUPANT)	
C	WIND EXPOSURE CATEGORY	[ ]	ASSEMBLY-NONCONCENTRATED (15 SQ. FT. /OCCUPANT)	25' BAYS x 2.0 / ACTUAL S_{DS} x 1.25 = [ ] MAXIMUM BAY SPACING IN FEET **
14	WIDTH OF COVER AREA IN FT.	200	DETERMINE OCCUPANT LOAD = AREA/OLF	
50	LENGTH OF COVERED AREA IN FT.	DETERMINE RISK CATEGORY		** BAY SPACING ON PLAN VIEWS TO BE REVISED TO MATCH & USE HIGHER SEISMIC COLUMNS & FOOTINGS.
700	AREA IN SQ. FT.	[X]	RISK CATEGORY II OCCUPANTS ≤ 300	
2	NUMBER OF BAYS	[ ]	RISK CATEGORY III OCCUPANTS > 300	
14'	MAXIMUM COLUMN HEIGHT IN FT.	[ ]	RISK CATEGORY III ADJACENT TO RISK CATEGORY III BUILDING	
2:12	ROOF SLOPE IN./FT.	NOTE: DUE TO REDUNDANCY FACTOR THERE CAN BE NO REDUCTION IN S_{DS} PER ASCE 7-16 12.8.1.3 FOR COVERS.		
NULL	SEISMIC COEFFICIENT, Sd1			

GEOHAZARD REPORTS				LIQUEFIABLE SOIL OR SITE CLASS F & E			
GEOHAZARD REPORT	[ ] REQUIRED	[X] NOT REQUIRED		LIQUEFIABLE SOILS	[ ] YES	[ ] NO	
GEOHAZARD REPORTS ARE NOT REQUIRED FOR CANTILEVERED COLUMN OPEN STRUCTURES PROVIDED THEY ARE CONSTRUCTED OF METAL, DO NOT EXCEED 4,000 SF. IN PLAN AREA AND ARE NOT LOCATED WITHIN STATE OR LOCAL GEOHAZARD ZONES. THE STRUCTURES MAY BE SPLIT INTO MULTIPLE SEISMICALLY SEPARATED STRUCTURES TO STAY BELOW THE 4,000 SF. TRIGGER.				IF STRUCTURE IS LOCATED IN AN AREA WITH LIQUEFIABLE SOIL OR SITE CLASS F & E, OVER-THE-COUNTER SUBMITTAL IS NOT ALLOWED AND REGULAR PROJECT SUBMITTAL IS REQUIRED. IF SITE IS NOT IN A MAPPED LIQUEFACTION HAZARD ZONE, IT MAY BE PRESUMED THAT NO LIQUEFACTION HAZARD EXISTS ON THAT SITE UNLESS A SITE-SPECIFIC GEOTECHNICAL REPORT IDENTIFIES SUCH HAZARD.			
[ ] CONCRETE EXPOSURE F0		[ ] CONCRETE EXPOSURE F2*					

* F2 IS REQUIRED FOR ANY SNOW LOAD 30 PSF OR GREATER.

IF SITE SPECIFIC PROJECT IS LOCATED IN A FLOOD ZONE OTHER THAN X, A LETTER STAMPED AND SIGNED FROM A SOILS ENGINEER IS REQUIRED TO VALIDATE THE ALLOWABLE SOIL VALUES SPECIFIED ON THIS P.C., SEE GENERAL NOTES NUMBER 11.

* 2 COVERS EACH STRUCTURES @ 1400 SQ. FT EACH

SINGLE POLE WALKWAY OPTIONS TABLE

LOADING	COLUMN HEIGHT	ROOF PANEL OPTION		PROJECTION
[X] 20 PSF LL	12' HEIGHT	[X]	McELROY MEGA-RIB	8'-0"
[ ] 20 PSF SL	14' HEIGHT	[ ]	AEP SPAN HR-96	10'-0"
[ ] 30 PSF SL	16' HEIGHT	[ ]	3 P.S.F.[4] MISC. DEAD LOAD	12'-0"
ROOF PITCH	COLUMN LOCATION	SEISMIC		[X] 14'-0"
[X] 2:12 MAX.	[X] OFF-SET	[X] LOWER *	YES	CONFIGURATION PER 6K/S4
[ ] 4:12 MAX.	[ ] CENTERED	[ ] HIGHER **	[X] NO	[ ] "A" [X] "B" [ ] "C" [ ] "D"
		RC III S_{DS} > 2.0		

NOTES:
1. SEE 6H/S3 FOR ROOF DECK PROFILES & SECTION PROPERTIES.
2. LIVE LOAD, LL = ROOF LIVE LOAD.
3. SNOW LOAD, SL = SNOW LOAD.
4. 3 P.S.F. MISC. DEAD LOAD NOT ALLOWED WITH SNOW LOAD. MISC. DEAD LOAD CAN INCLUDE SPRINKLERS OR SOLAR. BOTH ARE NOT ELIGIBLE FOR OVER THE COUNTER PLAN CHECK. LOADS CAN NOT BE SUPPORTED BY ROOF PANELS. ONLY THE BEAMS & PURLINS CAN SUPPORT MISC. DEAD LOAD.
5. SEE SITE SPECIFIC TABLE.
6. FOR SNOW LOAD: IF THE HORIZONTAL SEPARATION DISTANCE BETWEEN ADJACENT STRUCTURES, a, IS LESS THAN 20 FT. (6.1 M) AND LESS THAN SIX TIMES THE VERTICAL SEPARATION DISTANCE (s-6h), THEN THE REQUIREMENTS FOR THE LEEWARD DRIFT OF SECTION 7.7.1 SHALL BE USED TO DETERMINE THE DRIFT LOAD ON THE LOWER STRUCTURE. IF THE SNOW DRIFT ANALYSIS IS REQUIRED IT SHALL BE PROVIDED BY THE PC APPLICANT & THE SITE APPLICATION IS NOT ELIGIBLE FOR OVER THE COUNTER SUBMITTAL.

* R.C. II Sds ≤ 1.0 & R.C. III Sds ≤ 0.80
** R.C. II Sds ≤ 2.5 & R.C. III Sds ≤ 2.0

OPTIONS TABLE & SITE SPECIFIC INFORMATION TABLE — 8K

COLUMN & FOOTING TABLE (NOTE 6)

COLUMN HEIGHT	ROOF PITCH	LOAD	LOWER SEISMIC (S_{DS} ≤ 1.0 RISK CATEGORY II) (S_{DS} ≤ 0.8 RISK CATEGORY III) ≤ 12'–0" PROJECTION: COLUMN SIZE	PILE FOOTING	ALTERNATE SPREAD FOOTING (8B/S1) 1	LOWER SEISMIC ≤ 14'–0" PROJECTION: COLUMN SIZE	PILE FOOTING	ALTERNATE SPREAD FOOTING (8B/S1) 1	HIGHER SEISMIC (S_{DS} ≤ 2.5 RISK CATEGORY II) (S_{DS} ≤ 2.0 RISK CATEGORY III) (8) ≤ 12'–0" PROJECTION: COLUMN SIZE	PILE FOOTING	ALTERNATE SPREAD FOOTING (8B/S1) 1	HIGHER SEISMIC ≤ 14'–0" PROJECTION: COLUMN SIZE	PILE FOOTING	ALTERNATE SPREAD FOOTING (8B/S1) 1
12' COLUMN HEIGHT	2:12 MAX.	20psf LL/SL	HSS8x8x¼	2'-0"Øx10'-3" DEEP	9'-3"SQ.x2'-6" THICK (4)	HSS10x8x5/16	2'-0"Øx11'-9" DEEP	10'-4"SQ.x2'-6" THICK (4)	HSS8x8x5/16	2'-0"Øx11'-10" DEEP	10'-6"SQ.x2'-6" THICK (4)	HSS10x8x5/16	2'-0"Øx13'-2" DEEP	11'-4"SQ.x2'-6" THICK (5)
		30psf SL										HSS10x8x3/8		
	4:12 MAX.	20psf LL/SL	HSS10x8x5/16	2'-0"Øx12'-2" DEEP	9'-8"SQ.x2'-6" THICK (4)	HSS10x8x3/8	2'-0"Øx13'-0" DEEP	10'-10"SQ.x2'-6" THICK (4)	HSS10x8x5/16	2'-0"Øx12'-2" DEEP				
		30psf SL												
14' COLUMN HEIGHT	2:12 MAX.	20psf LL/SL	HSS8x8x¼	2'-0"Øx10'-8" DEEP	9'-8"SQ.x2'-6" THICK (4)	HSS10x8x5/16	2'-0"Øx12'-2" DEEP	10'-10"SQ.x2'-6" THICK (4)	HSS8x8x5/16	2'-0"Øx12'-3" DEEP	11'-0"SQ.x2'-6" THICK (5)	HSS10x8x3/8	2'-0"Øx13'-6" DEEP	11'-10"SQ.x2'-6" THICK (5)
		30psf SL	HSS8x8x5/16						HSS10x8x5/16	2'-0"Øx12'-6" DEEP				
	4:12 MAX.	20psf LL/SL	HSS10x8x5/16	2'-0"Øx12'-6" DEEP	9'-10"SQ.x2'-6" THICK (4)	HSS10x8x3/8	2'-0"Øx13'-2" DEEP	11'-0"SQ.x2'-6" THICK (5)						
		30psf SL												
16' COLUMN HEIGHT	2:12 MAX.	20psf LL/SL	HSS8x8x5/16	2'-0"Øx11'-0" DEEP	10'-0"SQ.x2'-6" THICK (4)	HSS10x8x5/16	2'-0"Øx12'-6" DEEP	11'-3"SQ.x2'-6" THICK (5)	HSS10x8x5/16	2'-0"Øx12'-8" DEEP	11'-4"SQ.x2'-6" THICK (5)	HSS10x8x½	2'-0"Øx14'-0" DEEP	12'-4"SQ.x2'-6" THICK (5)
		30psf SL								2'-0"Øx12'-8" DEEP				
	4:12 MAX.	20psf LL/SL	HSS10x8x5/16	2'-0"Øx12'-8" DEEP	10'-2"SQ.x2'-6" THICK (4)	HSS10x8x½	2'-0"Øx13'-6" DEEP							
		30psf SL												

NOTES:

1. ALTERNATE SPREAD FOOTINGS ARE OPTIONAL FOOTINGS @ AN ADDITIONAL COST.
2. NO SNOW LOAD ALLOWED W/ 3 P.S.F. MISC. DEAD LOAD.
3. COLUMN EMBEDMENT OF PILE FOOTING TO EXTEND INTO FOOTING 3"–6" MAX. FROM BOTTOM, SEE SECTION 6K/S3.
4. PROVIDE 8–#6 REBARS EACH WAY @ TOP & BOTTOM OF FOOTING.
5. PROVIDE 10–#6 REBARS EACH WAY @ TOP & BOTTOM OF FOOTING.
6. IF SITE SPECIFIC PROJECT IS LOCATED IN A FLOOD ZONE OTHER THAN ZONE X, A LETTER STAMPED AND SIGNED FROM A SOILS ENGINEER IS REQUIRED TO VALIDATE THE ALLOWABLE SOIL VALUES SPECIFIED ON THIS P.C., SEE GENERAL NOTES NUMBER 11.
7. MINIMUM PIER SPACING IS 3 DIAMETERS PER CBC 1810A.2.5. 5ds MAXIMUM OR REDUCE BAY SPACING' SEE SITE SPECIFIC INFORMATION TABLE ON SHEET 5I.

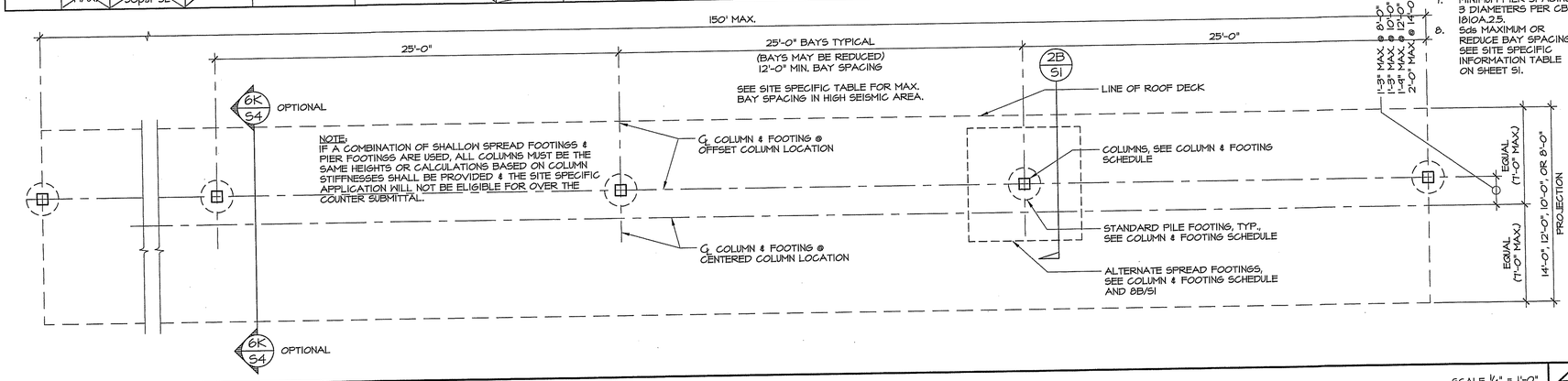

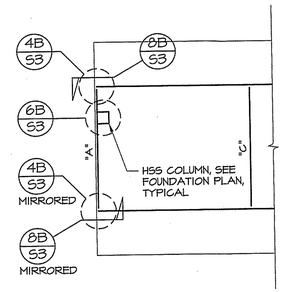

PLAN @ UPPER ROOF WHERE STEP OCCURS

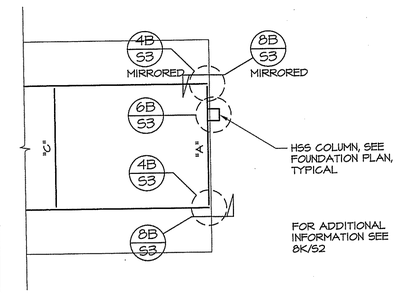

PLAN @ LOWER ROOF WHERE STEP OCCURS

SCALE ¼" = 1'-0" | 4H | ROOF FRAMING PLAN | SCALE ¼" = 1'-0" | 4K

FOUNDATION PLAN

NOTE: SEE 8K/S3 FOR ELEVATION WHERE STEP IN ROOF OCCUR.

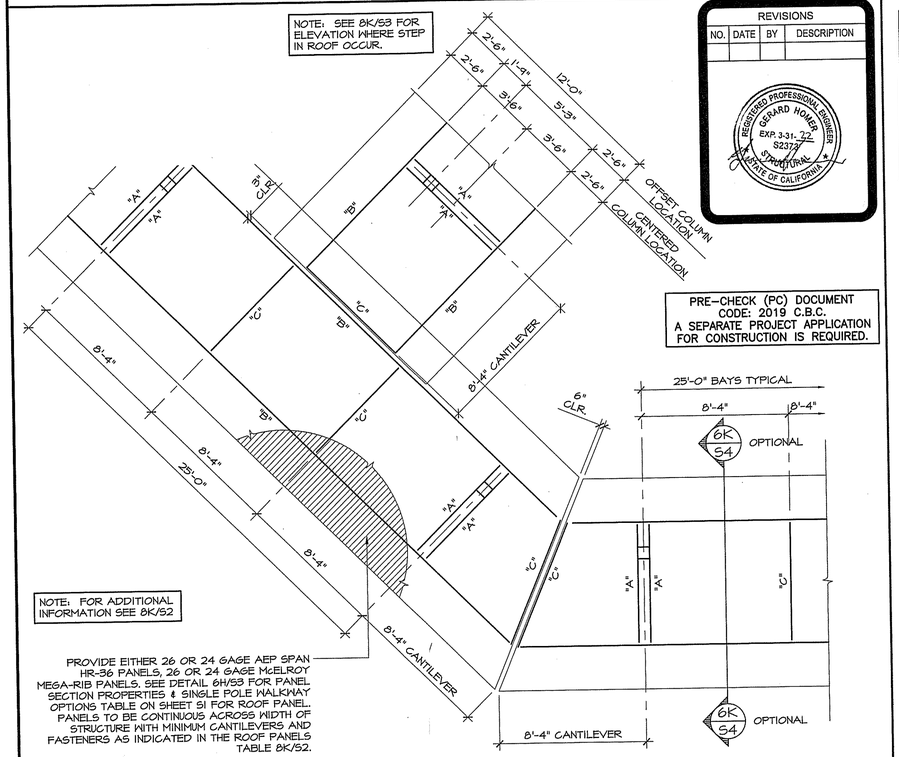

PRE-CHECK (PC) DOCUMENT
CODE: 2019 C.B.C.
A SEPARATE PROJECT APPLICATION FOR CONSTRUCTION IS REQUIRED.

NOTE: FOR ADDITIONAL INFORMATION SEE 8K/S2

PROVIDE EITHER 26 OR 24 GAGE AEP SPAN HR-36 PANELS, 26 OR 24 GAGE McELROY MEGA-RIB PANELS. SEE DETAIL 6H/S3 FOR PANEL SECTION PROPERTIES & SINGLE POLE WALKWAY OPTIONS TABLE ON SHEET 5I FOR ROOF PANEL. PANELS TO BE CONTINUOUS ACROSS WIDTH OF STRUCTURE WITH MINIMUM CANTILEVERS AND FASTENERS AS INDICATED IN THE ROOF PANELS TABLE 8K/S2.

REVISIONS

NO.	DATE	BY	DESCRIPTION

REGISTERED PROFESSIONAL ENGINEER GERARD HOMER EXP. 3-31-21 S2337 STRUCTURAL STATE OF CALIFORNIA

ROOF PANEL TABLE (1, 3, 4, & 6)

ROOF PITCH	LOAD	MINIMUM REQUIRED CANTILEVER LENGTHS @ 6'–0" CENTER SPAN (3)	MINIMUM REQUIRED CANTILEVER LENGTHS @ 7'–0" CENTER SPAN (3)	MINIMUM REQUIRED CANTILEVER LENGTHS @ 8'–0" CENTER SPAN (3 & 5)	SCREWS PER PANEL PER SUPPORT
2:12 MAX.	20psf LL/SL	NO CANTILEVER REQUIRED	1'-0" MIN.	0'-6" MIN.	(4)- #12-14x1" LONG W/ ½"ø TWINSEAL WASHERS
	30psf SL		1'-8" MIN.	1'-8" MIN.	
4:12 MAX.	20psf LL/SL		1'-6" MIN.	1'-4" MIN.	(5)- #12-14x1" LONG W/ ½"ø TWINSEAL WASHERS
	30psf SL	0'-8" MIN.	2'-0" MIN.	2'-0" MIN.	

1. SEE 8K/5I FOR ROOF PANEL OPTIONS AND 6H/S3 FOR PROFILES & PROPERTIES.
2. ¼ IN 12 MINIMUM.
3. WHEN NOT USING STANDARD LAYOUTS SHOW ON ROOF FRAMING PLAN BELOW, THE ROOF PANELS MUST MEET THE MINIMUM REQUIRED CANTILEVER LENGTHS.
4. LENGTHS OF CANTILEVERS MUST BE EQUAL EACH SIDE, TYPICAL.
5. MUST USE 24 GAGE ROOF PANEL OPTIONS @ 8'-0" CENTER SPAN LAYOUT OPTION.
6. MAXIMUM ALLOWABLE CANTILEVER AT 24 GAGE ROOF PANELS IS 3'-0". IN NO CASE SHALL THE ROOF PANEL LENGTH EXCEED THE 14'-0" MAXIMUM ROOF PROJECTION.

BEAM TABLE

PITCH	PROJECTION	LOADING	COLUMN OFFSET	CROSS BEAM "A"	SIDE BEAM "B"	BLOCKING & END CLOSURES
¼:12 MIN. 2:12 MAX.	≤ 12'-0"	20psf LL/SL	0'-0" TO 1'-9"	C14x2½x12 GAGE	C14x2½x12 GAGE	20 GAGE CEE W/ 1½" FLANGES, DEPTH TO MATCH SIDE BEAM DEPTH, SEE 2F & 4F/S3
		30psf SL	0'-0" TO 1'-9"	C14x2½x12 GAGE	C18x2½x12 GAGE	
	> 12'-0", ≤ 14'-0"	20psf LL/SL	0'-0" TO 1'-9"	C14x2½x12 GAGE	C18x2½x12 GAGE	
			1'-10" TO 2'-0"	C16x3½x12 GAGE		
		30psf SL	0'-0" TO 0'-10"	C14x2½x12 GAGE	C18x2½x12 GAGE	
			0'-11" TO 1'-8"	C16x3½x12 GAGE		
			1'-9" TO 2'-0"	C16x3½x10 GAGE		
4:12 MAX.	≤ 12'-0"	20psf LL/SL	0'-0" TO 1'-9"	C14x2½x12 GAGE	C18x2½x12 GAGE	
		30psf SL	0'-0" TO 1'-9"	C14x2½x12 GAGE	C18x2½x12 GAGE	
	> 12'-0", ≤ 14'-0"	20psf LL/SL	0'-0" TO 1'-3"	C14x2½x12 GAGE	C18x2½x12 GAGE	
			1'-4" TO 2'-0"	C16x3½x12 GAGE		
			2'-0"	C16x3½x10 GAGE		
		30psf SL	0'-0" TO 0'-5"	C14x2½x12 GAGE	C18x2½x12 GAGE	
			0'-6" TO 1'-2"	C16x3½x12 GAGE		
			1'-3" TO 2'-0"	C16x3½x10 GAGE		

NO 3 PSF MISC. DEAD LOAD ALLOWED WITH SNOW LOAD

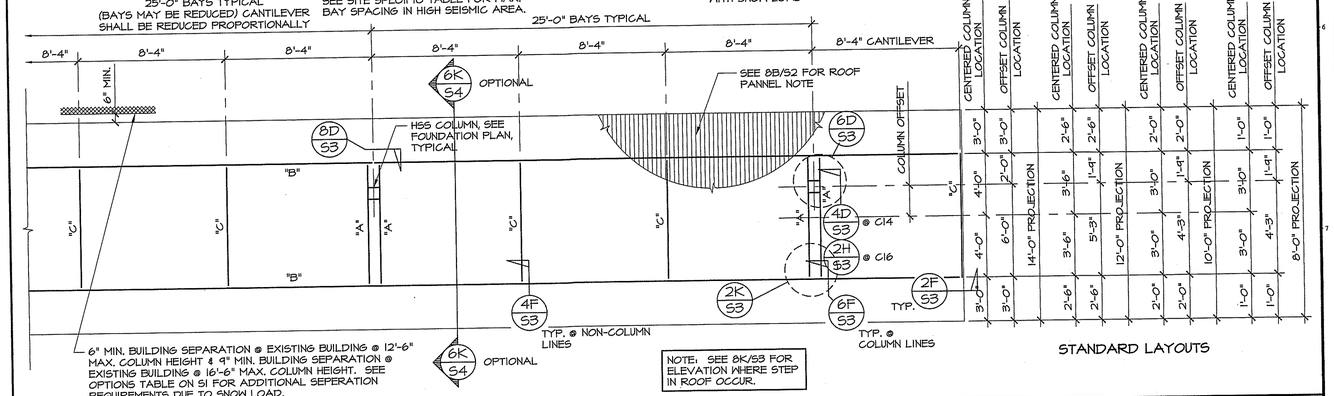

6" MIN. BUILDING SEPARATION @ EXISTING BUILDING @ 12'-6" MAX. COLUMN HEIGHT & 9" MIN. BUILDING SEPARATION @ EXISTING BUILDING @ 16'-6" MAX. COLUMN HEIGHT. SEE OPTIONS TABLE ON 5I FOR ADDITIONAL SEPERATION REQUIREMENTS DUE TO SNOW LOAD.

NOTE: SEE 8K/S3 FOR ELEVATION WHERE STEP IN ROOF OCCUR.

STANDARD LAYOUTS

SCALE ¼" = 1'-0" | 8B | ROOF FRAMING PLAN @ 45° OPTION | SCALE ¼" = 1'-0" | 8K | ROOF FRAMING PLANS

PROJECT: SINGLE POST WALKWAY COVER VALLEY SCHOOL SHELTERS

IDENTIFICATION STAMP
DIV. OF THE STATE ARCHITECT
APP: 02-118169 PC
REVIEWED FOR:
SS ☑ FLS ☑ ACS ☑ CWS ☐
DEPARTMENT OF GENERAL SERVICES
DATE: 01/07/2021

Gerard Homer and Associates
STRUCTURAL ENGINEERS
16765 SYPERT SCHOOL RD.
HOLLAND, TX. 76534
PH.: (559) 734-6675
Email: ghomerse@gmail.com

DWN BY: B.G.H. | CHKD BY: G.B.H.

DATE: 12/30/20

PROJECT NO: 19246 22011

DRAWING TITLE: ROOF FRAMING PLANS

SHEET NUMBER **S2** OF 4 SHEETS

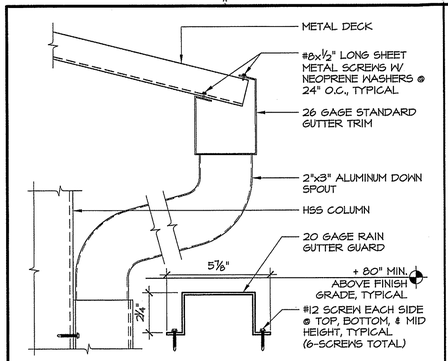

BOX GUTTER SCALE 3" = 1'-0" **2B**

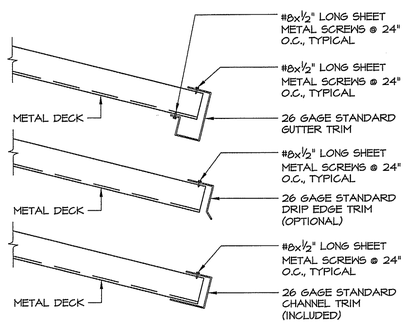

FASCIA OPTIONS SCALE 3" = 1'-0" **2D**

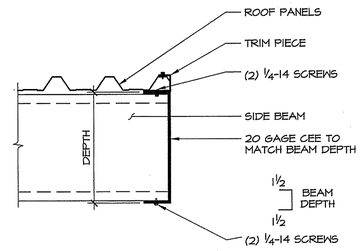

BEAM END SCALE 1½" = 1'-0" **2F**

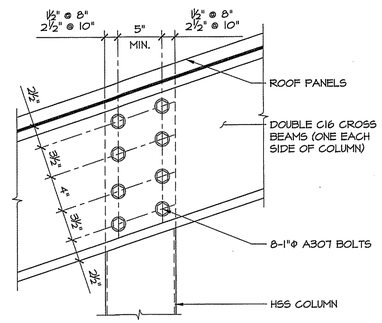

16" CROSS BEAM TO COLUMN SCALE 1½" = 1'-0" **2H**

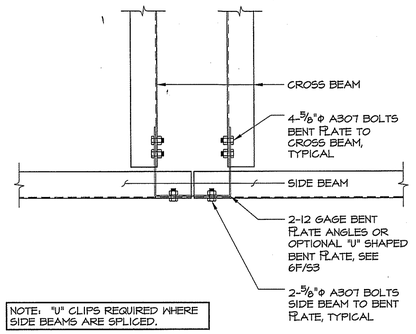

NOTE: "U" CLIPS REQUIRED WHERE SIDE BEAMS ARE SPLICED.

SIDE BEAMS TO CROSS BEAMS SCALE 1½" = 1'-0" **2K**

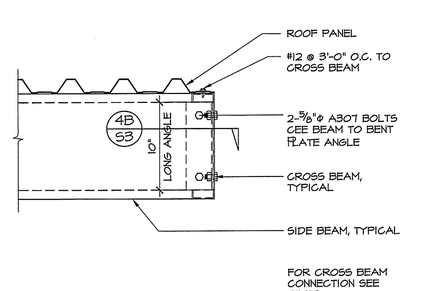

BEAM TO BEAM SCALE 1½" = 1'-0" **4B**

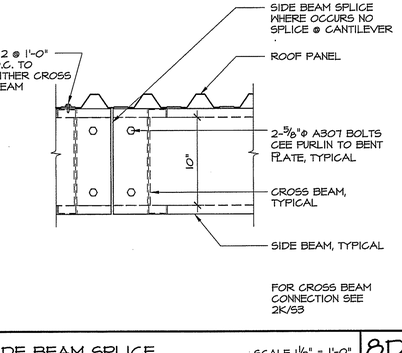

14" CROSS BEAM TO COLUMN SCALE 1½" = 1'-0" **4D**

BRACE TO BEAM SCALE 1½" = 1'-0" **4F**

Fy = 80,000 PSI PER ASTM A653 OR ASTM A792
Fy = 50,000 PSI @ 24 GAUGE PANELS ONLY

AEP SPAN HR-36 SECTION PROPERTIES

GAUGE	Wt. (lbs./ft.²)	I+ (in.⁴/ft.)	S+ (in.³/ft.)	I- (in.⁴/ft.)	S- (in.³/ft.)
24	1.2	0.1116	0.1234	0.1141	0.1156
26	0.98	0.0825	0.0895	0.0838	0.0839

McELROY MEGA-RIB SECTION PROPERTIES

GAUGE	Wt. (lbs./ft.²)	I+ (in.⁴/ft.)	S+ (in.³/ft.)	I- (in.⁴/ft.)	S- (in.³/ft.)
24	1.22	0.1038	0.1228	0.1038	0.1228
26	0.98	0.0761	0.0841	0.0761	0.0841

SECTION PROPERTIES ARE EFFECTIVE SECTION PROPERTIES TYP.

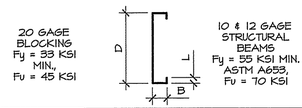

CEE SECTION PROPERTIES

SECTION DxB	GAGE	WEIGHT lb/ft.	Ae in.²	AXIS X-X Ix in.⁴	AXIS X-X Se in.³	AXIS Y-Y Iy in.⁴	AXIS Y-Y Sy in.³	L in.
C14x1½	20	2.05	0.117	7.093	0.742	0.068	0.05	-
C14x2½	12	7.14	1.14	53.354	7.622	1.414	0.715	0.916
C16x1½	20	2.29	0.1172	9.492	0.853	0.069	0.051	-
C16x3½	10	11.02	1.8	112.26	13.517	4.32	1.582	0.989
C18x2½	10	10.59	1.619	118.0	12.233	1.84	0.897	0.916
C18x1½	20	2.54	0.1174	12.261	0.964	0.07	0.051	-
C18x2½	12	8.57	1.149	100.08	9.8	1.49	0.725	0.916

MATERIAL PROPERTIES SCHEDULES **6H**

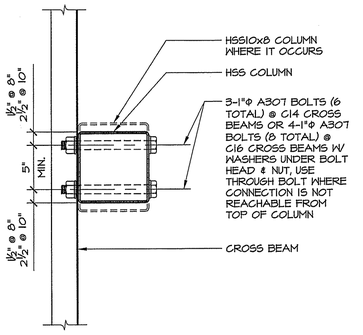

BEAM TO COLUMN SCALE 1½" = 1'-0" **6B**

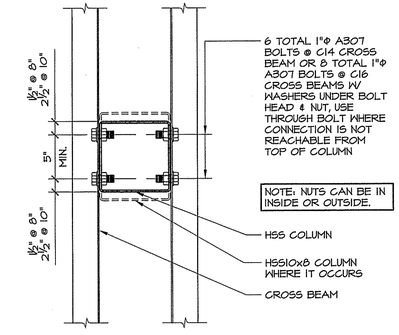

BEAM TO COLUMN SCALE 1½" = 1'-0" **6D**

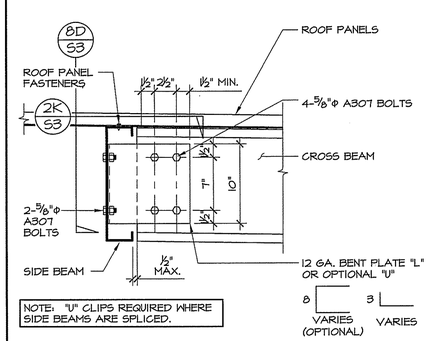

NOTE: "U" CLIPS REQUIRED WHERE SIDE BEAMS ARE SPLICED.

BEAM TO BEAM SCALE 1½" = 1'-0" **6F**

BEAM TO BEAM SCALE 1½" = 1'-0" **8B**

SIDE BEAM SPLICE SCALE 1½" = 1'-0" **8D**

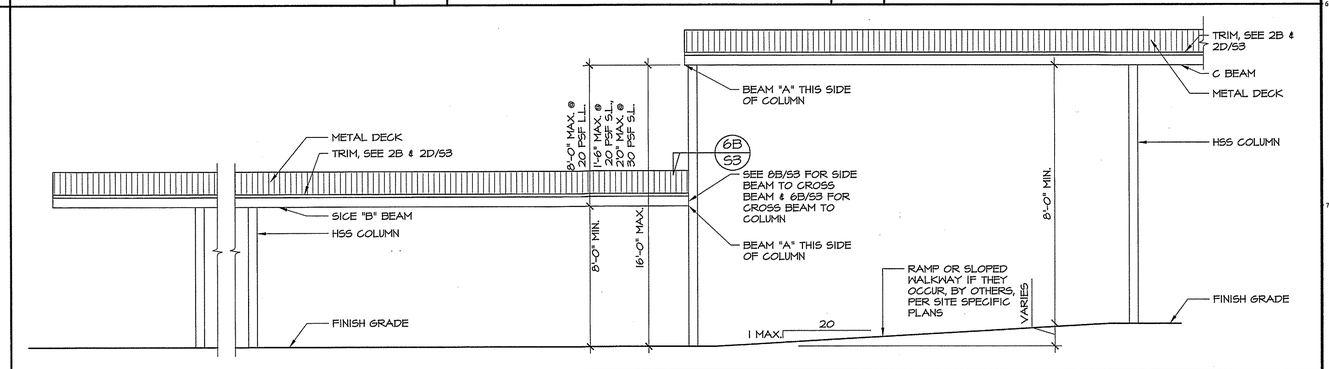

ELEVATION SCALE ¼" = 1'-0" **8K**

PROJECT: SINGLE POST WALKWAY COVER VALLEY SCHOOL SHELTERS

REVISIONS			
NO.	DATE	BY	DESCRIPTION

REGISTERED PROFESSIONAL ENGINEER GERARD HOMER EXP. 3-31-22 82372 STATE OF CALIFORNIA

PRE-CHECK (PC) DOCUMENT
CODE: 2019 C.B.C.
A SEPARATE PROJECT APPLICATION FOR CONSTRUCTION IS REQUIRED.

IDENTIFICATION STAMP
DIV. OF THE STATE ARCHITECT
APP: 02-118169-PC
REVIEWED FOR
SS ☑ FLS ☑ ACS ☑ CASp ☐
DEPARTMENT OF GENERAL SERVICES
DATE: 01/07/2021

16765 SYPERT SCHOOL RD.
HOLLAND, TX. 76534
Gerard Homer and Associates
STRUCTURAL ENGINEERS
PH.: (559) 734-6675
Email: ghomerse@gmail.com

DWN BY: B.S.H.	CHKD BY: G.B.H.
DATE: 12/30/20	
PROJECT NO: 19246	22.111

DRAWING TITLE
SECTION
TYPICAL ELEVATION
DETAILS

SHEET NUMBER
S3
OF 4 SHEETS

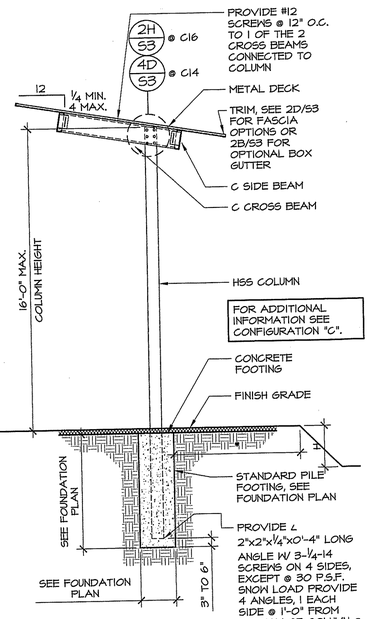

CONFIGURATION "D"

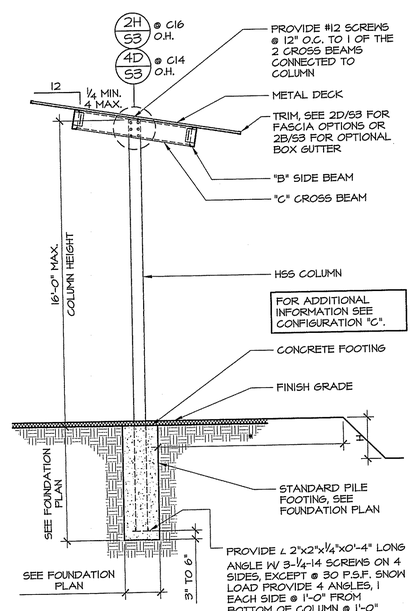

CONFIGURATION "A"

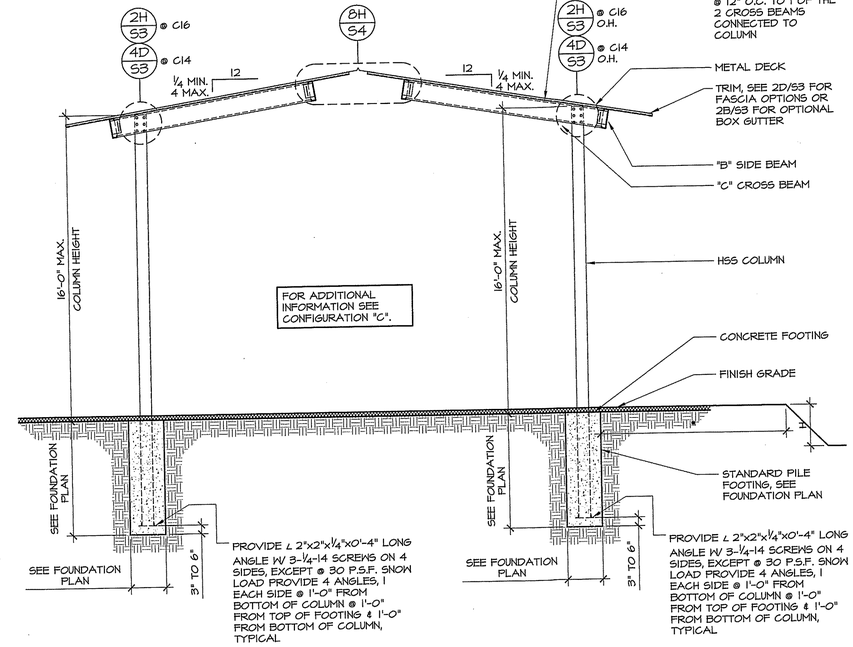

CONFIGURATION "B"

* DISTANCE TO TOP OF SLOPE EQUAL TO THE LEAST OF H/3 OR 40 FEET BUT NOT LESS THAN 7 PIER DIAMETERS.

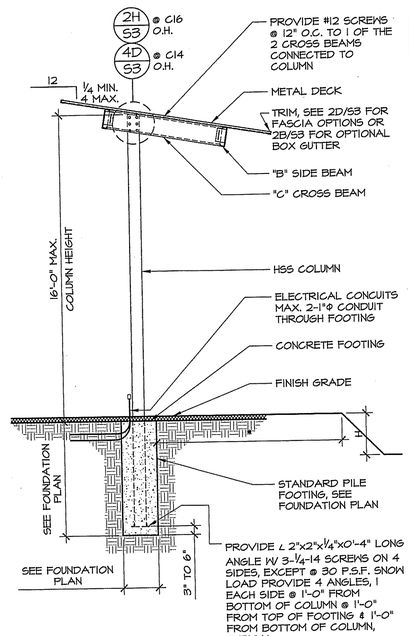

CONFIGURATION "C"

SCALE 1/4" = 1'-0" 6K

SECTIONS

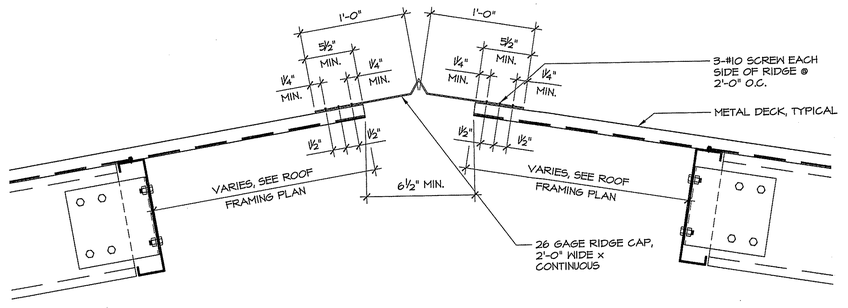

RIDGE CAP

SCALE 1½" = 1'-0" 8H

PRE-CHECK (PC) DOCUMENT
CODE: 2019 C.B.C.
A SEPARATE PROJECT APPLICATION FOR CONSTRUCTION IS REQUIRED.

8K

PROJECT: SINGLE POST WALKWAY COVER
VALLEY SCHOOL SHELTERS

IDENTIFICATION STAMP
DIV. OF THE STATE ARCHITECT
APP: 02-118169-PC
REVIEWED FOR:
SS ☑ FLS ☑ ACS ☑ CG ☐
DEPARTMENT OF GENERAL SERVICES
DATE: 01/07/2021

16765 SYPERT SCHOOL RD.
HOLLAND, TX. 76534
PH.: (559) 734-8675
Email: ghomerse@gmail.com
Gerard Homer and Associates
STRUCTURAL ENGINEERS

REVISIONS			
NO.	DATE	BY	DESCRIPTION

REGISTERED PROFESSIONAL ENGINEER
GERARD HOMER
EXP. 3-31-22
S2372
STRUCTURAL
STATE OF CALIFORNIA

DWN BY: B.G.H.	CHKD BY: G.B.H.
DATE: 12/30/20	
PROJECT NO: 19246 22111	

DRAWING TITLE
SECTION
TYPICAL ELEVATION
DETAILS

SHEET NUMBER
S4
OF 4 SHEETS