12/21/2021 10:01:09 AM

CSU STANISLAUS
CHILD DEVELOPMENT CENTER
PERMIT SET - DSA V2
DECEMBER 15, 2021

ALTERNATES

SITE ALTERNATES:

1. Addition of fire lane extension as shown on C3.1.
2. Alternate fence construction – Replace custom steel fences and gates at all yards with pre-fabricated steel fence shown on callout #17 on Sheets L1.1 and L1.2. Shape and layout of fences and gates to conform to original design.
3. Not used.

BUILDING ALTERNATES:

4. Change Eomac Veneered Linear Plank Wood ceiling to: Armstrong Wood Works Grille Tegular 663008 2x4 for 9/16" tegular, Light Cherry.
5. Increase PV scope from 100kW system to 300kW, see E6.1.
6. Add water meter, see P0.02 Plumbing Fixture Schedule
7. Add 77 SF of dichroic glazing panels at truss of north roof monitor, see 2/A3.11, A6.01, 7/A9.41, & 08 80 00.

VICINITY MAP

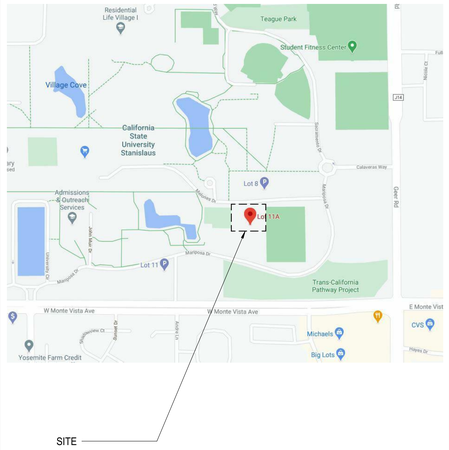

PROJECT TEAM

ARCHITECT

EHDD ARCHITECTURE
PIER 1 BAY 2
THE EMBARCADERO
SAN FRANCISCO, CA 94111
T: (415) 285-9193

CIVIL ENGINEER

NORTHSTAR ENGINEERING GROUP, INC.
620 12TH ST.
MODESTO, CA 95354
T: (209) 524-3525

LANDSCAPE ARCHITECT

KLA, INC.
151 N. NORLIN ST.
SONORA, CA 95370
T: (209) 532-2856

FOOD SERVICE DESIGNER

CINI•LITTLE INTERNATIONAL, INC.
156 2ND STREET
SAN FRANCISCO, CA 94105
T: (415) 922-5900

STRUCTURAL ENGINEER

MAR STRUCTURAL DESIGN
2332 5TH ST., SUITE D
BERKELEY, CA 94710
T: (510) 991-1102

MECHANICAL / PLUMBING / FIRE PROTECTION ENGINEER

NEXUS ENGINEERING
1400-A LONE PALM AVE,
MODESTO, CA 95351
T: (209) 572-7399

ELECTRICAL/ AV / IT / FIRE ALARM ENGINEER

PEZONNI ENGINEERING, INC.
1150 9TH ST., #1415
MODESTO, CA 95354
T: (209) 554-4602

SHEET INDEX

(171 SHEETS TOTAL)

GENERAL
G0.01 COVER SHEET AND INDEX
G0.02 ARCHITECTURAL ABBREVIATIONS AND SYMBOLS
G0.05 PROJECT INFORMATION
G0.06 FIRE LIFE SAFETY PLAN
G0.07 PLUMBING CALCULATIONS
G0.08 LOCKDOWN PROCESS
G0.11 CODE SIGNAGE
G0.12 ACCESSIBLE MOUNTING HEIGHTS

CIVIL
C1.1 COVER SHEET
C1.2 GENERAL NOTES AND SPECIFICATIONS
C1.3 DETAILS AND CROSS SECTIONS
C1.4 DETAILS AND CROSS SECTIONS
C1.5 DETAILS AND CROSS SECTIONS
C1.6 DETAILS AND CROSS SECTIONS
C1.7 PAVEMENT DELINEATION PLAN
C2.1 TOPOGRAPHIC AND DEMOLITION PLAN
C2.2 TOPOGRAPHIC AND DEMOLITION PLAN
C2.3 TOPOGRAPHIC AND DEMOLITION PLAN
C3.1 DIMENSION AND PAVING PLAN
C3.2 DIMENSION AND PAVING PLAN
C3.3 DIMENSION AND PAVING PLAN
C4.1 GRADING AND DRAINAGE PLAN
C5.1 STORM DRAINAGE PLAN
C6.1 SANITARY SEWER PLAN
C7.1 COMPOSITE UTILITY PLAN
C7.2 COMPOSITE UTILITY PLAN
C7.3 COMPOSITE UTILITY PLAN
C8.1 EROSION CONTROL PLAN, NOTES AND DETAILS

LANDSCAPE
L1.0 LANDSCAPE COVER SHEET
L1.1 CONSTRUCTION PLAN
L1.2 CONSTRUCTION PLAN
L2.1 CONSTRUCTION DETAILS
L2.2 CONSTRUCTION DETAILS
L2.3 CONSTRUCTION DETAILS
L2.4 CONSTRUCTION DETAILS
L2.5 CONSTRUCTION DETAILS
L3.1 IRRIGATION PLAN
L3.2 IRRIGATION PLAN
L4.1 PLANTING PLAN
L4.2 PLANTING PLAN
L5.1 SITE INFRASTRUCTURE LANDSCAPE PLAN
L6.1 LANDSCAPE DETAILS
L7.1 WELO NOTES AND CALCULATIONS

ARCHITECTURAL
A0.11 SITE PLAN
A0.31 DOOR TYPES AND SCHEDULES
A2.01 FLOOR PLAN
A2.02 ROOF PLAN
A2.11 SLAB PLAN
A2.21 SIGNAGE PLAN & FINISH PLAN AND SCHEDULE
A2.41 FURNITURE & EQUIPMENT PLAN (FOR REFERENCE ONLY)
A3.01 BUILDING ELEVATIONS
A3.11 BUILDING SECTIONS
A3.12 TRUSS PROFILE
A3.21 ENLARGED ELEVATIONS & SECTIONS
A3.22 ENLARGED ELEVATIONS & SECTIONS
A3.23 ENLARGED ELEVATIONS & SECTIONS
A4.01 ENLARGED RESTROOM PLANS AND ELEVATIONS
A4.02 ENLARGED RESTROOM PLANS AND ELEVATIONS
A4.03a ENLARGED RESTROOM PLANS AND ELEVATIONS
A4.03b ENLARGED RESTROOM ELEVATIONS
A4.04 ENLARGED CHANGING PLANS AND ELEVATIONS
A5.01 INTERIOR ELEVATIONS
A5.02 INTERIOR ELEVATIONS
A5.03 INTERIOR ELEVATIONS
A6.01 REFLECTED CEILING PLAN
A6.02 CEILING SLOPES DIAGRAM
A6.11 ENLARGED REFLECTED CEILING PLAN - EXTERIOR SOFFITS
A6.12 ENLARGED REFLECTED CEILING PLAN - EXTERIOR SOFFITS
A8.01 BELOW GRADE WATERPROOFING DETAILS
A8.11 EXTERIOR WALL DETAILS - CEMENT PLASTER
A8.21 EXTERIOR STOREFRONT DETAILS
A8.22 EXTERIOR WINDOW WALL DETAILS
A8.23 EXTERIOR DETAILS
A8.24 EXTERIOR SOFFIT DETAILS
A8.51 ROOF DETAILS
A9.01 WOOD PARTITION TYPES AND FRAMING DETAILS
A9.02 TYPICAL PARTITION DETAILS
A9.11 TYPICAL CEILING DETAILS
A9.12 CEILING DETAILS
A9.21 INTERIOR GLAZING AND DOOR DETAILS
A9.31 TYPICAL CASEWORK DETAILS
A9.32 CASEWORK DETAILS
A9.33 RECEPTION DESK PLAN AND DETAILS
A9.41 MISC. INTERIOR DETAILS

FOOD SERVICE
QF101 FOOD SERVICE EQUIPMENT - PLAN, SCHEDULE AND SPECIAL CONDITIONS
QF102 FOOD SERVICE EQUIPMENT - MECHANICAL SPOT CONNECTION PLAN
QF103 FOOD SERVICE EQUIPMENT - ELECTRICAL SPOT CONNECTION PLAN

STRUCTURAL
S1.0 STRUCTURUAL ABBREVIATIONS & SHEET INDEX
S1.1 STRUCTUAL ISOMETRIC VIEWS
S1.2 GENERAL NOTES
S2.0 FOUNDATION & 1ST FLOOR PLAN
S2.1 ROOF FRAMING PLAN
S3.0 BUILDING ELEVATIONS
S3.1 BUILDING SECTIONS
S3.10 TRUSS KEY PLAN
S3.11 TRUSS ELEVATIONS
S3.12 TRUSS ELEVATIONS
S3.13 TRUSS ELEVATIONS
S3.14 TRUSS ELEVATIONS
S4.0 TYPICAL CONCRETE DETAILS
S4.1 CONCRETE FOUNDATION DETAILS
S6.0 TYPICAL WOOD FRAMING DETAILS
S6.1 TYPICAL WOOD SHEARWALL DETAILS
S6.2 TYPICAL WOOD FRAMING DETAILS
S6.10 WOOD FRAMING DETAILS
S6.11 TRUSS CONNECTION DETAILS
S6.12 TRUSS CONNECTION & ROOF MONITOR DETAILS
S6.13 ROOF MONITOR DETAILS
S6.14 WOOD FRAMING DETAILS
S6.15 WOOD FRAMING DETAILS
S6.16 WOOD FRAMING DETAILS

MECHANICAL
M0.01 MECHANICAL - SCHEDULES, LEGENDS & NOTES
M0.02 MECHANICAL - SCHEDULES, LEGENDS & NOTES
M0.03 MECHANICAL - GREEN BUILDING NOTES
M1.01 MECHANICAL - SITE PLAN
M2.01 MECHANICAL - OVEREALL HVAC FLOOR PLAN
M2.02 MECHANICAL - ENLARGED HVAC FLOOR PLAN
M2.03 MECHANICAL - ENLARGED HVAC FLOOR PLAN
M3.01 MECHANICAL - OVERALL HVAC PIPING FLOOR PLAN
M3.02 MECHANICAL - ENLARGED HVAC PIPING FLOOR PLAN
M3.03 MECHANICAL - ENLARGED HVAC PIPING FLOOR PLAN
M4.01 MECHANICAL - ROOF PLAN
M5.01 MECHANICAL - DETAILS
M5.02 MECHANICAL - DETAILS
M5.03 MECHANICAL - DETAILS
M5.04 MECHANICAL - DETAILS

TITLE 24
T24.01 ENERGY COMPLIANCE
T24.02 ENERGY COMPLIANCE
T24.03 ENERGY COMPLIANCE
T24.04 ENERGY COMPLIANCE

PLUMBING
P0.01 PLUMBING LEGENDS & NOTES
P0.02 PLUMBING SCHEDULES & GREEN BUILDING NOTES
P1.01 PLUMBING - OVERALL FLOOR PLAN
P1.02 PLUMBING - ENLARGED FLOOR PLAN
P1.03 PLUMBING - ENLARGED FLOOR PLAN
P2.01 PLUMBING - ROOF PLAN
P5.01 PLUMBING - DETAILS
P5.02 PLUMBING - DETAILS

FIRE PROTECTION
FP1.0 FIRE PROTECTION UNDERGROUND & SITE PLAN
FP2.0 FIRE PROTECTION OVERHEAD PIPING PLAN
FP3.0 FIRE PROTECTION REFLECTED CEILING PLAN
FP4.0 FIRE PROTECTION BLDG SECTION

ELECTRICAL
E0.1 GENERAL ELECTRICAL NOTES AND ABBREVIATIONS
E0.2 LIGHTING SCHEDULE
E0.3 NETWORK CABLING SCHEDULE
E1.1 OVERALL ELECTRICAL CAMPUS PLAN
E1.2 ELECTRICAL PROJECT SITE PLAN
E2.1 FLOOR PLAN - POWER
E3.1 FLOOR PLAN - INFORMATION TECH. & AUDIO-VIDEO
E3.2 FLOOR PLAN - ACCESS CONTROL & CCTV
E4.1 FLOOR PLAN - FIRE ALARM
E4.1A CEILING PLAN - FIRE ALARM
E4.2 FIRE ALARM DETAILS
E4.3 FIRE ALARM CALCULATIONS
E5.1 CEILING PLAN - LIGHTING
E5.1E CEILING PLAN - LIGHTING EMERGENCY
E6.1 ROOF PLAN - POWER
E7.1 SINGLE LINE DIAGRAM
E7.2 PANELBOARD SCHEDULES
E8.1 DETAILS
E9.1 DETAILS
E9.2 DETAILS
E9.3 DETAILS
E9.4 DETAILS
E9.5 DETAILS
E10.1 NRCC-ELEC
E10.2 NRCC-LT1
E10.3 NRCC-LT0
E10.4 NRCC-SOLAR
E11.1 OVERALL SITE PHOTOMETRICS
E11.2 INTERIOR PHOTOMETRICS
171

STATE FIRE MARSHAL & DSA STAMP

DSA APPLICATION NO. 02-119316

STATE FIRE MARSHAL PERMIT 21-N-0498-CP-DR

Division of the State Architect

APPROVED
DIV. OF THE STATE ARCHITECT
APP: 02-119316 INC:
REVIEWED FOR
SS ☐ FLS ☐ ACS ☑
DATE: 03/24/2022

Office of the State Fire Marshal

OFFICE OF THE STATE FIRE MARSHAL
APPROVED FIRE AND PANIC ONLY
03/14/22
21-0498
Approval of this plan does not authorize or approve any omission or deviation from applicable regulations. Final approval is subject to field inspection. One set of approved plans shall be available on the project site at all times.

CSUS CHILD DEVELOPMENT CENTER
CALIFORNIA STATE UNIVERSITY, STANISLAUS
ONE UNIVERSITY CIRCLE
TURLOCK, CA 95382

ehdd.

PIER 1, BAY 2
THE EMBARCADERO
SAN FRANCISCO, CA 94111

INFO@EHDD.COM
+1 415-285-9193

Consultant

Stamp

LICENSED ARCHITECT
JENNIFER K. DEVLIN
Ren. 5-31-23
STATE OF CALIFORNIA

Printing	Date
95% CONSTRUCTION DOCUMENTS	06.25.2021
PERMIT SET	08.16.2021
PERMIT SET - DSA V2	12.15.2021
PERMIT SET - SFM	12.21.2021

Revisions and Description	Date

Scale
12" = 1'-0"

Drawn by
Author

EHDD Job Number
20020

Sheet Title
COVER SHEET AND INDEX

Sheet Number
G0.01 V3

C:\Users\ljquinones\OneDrive - EHDD\Documents\20020-A-CSU STANISLAUS CDC- CENTRAL_ljquinones.rvt

12/10/2021 9:42:05 AM

ARCHITECTURAL ABBREVIATIONS

NOTE:
1. Not all abbreviations listed below appear in the documents
2. Abbreviations apply whether or not they contain periods
3. Definitions for abbreviations for particular drawings may appear on those drawings. Abbreviations for engineering drawings may appear on the general information sheets for those disciplines.

&.....And
°.....Angle in Degrees
∠.....Angle
@.....At
X.....By
℄.....Centerline
ø.....Diameter or Round
(E).....Existing
(N).....New
P.....Plate
%.....Percent
#.....Pound or Number
℗.....Property Line
□.....Square

A.C.....Air Conditioning
A/V.....Audio Visual
AB.....Anchor Bolt
ABRSV.....Abrasive
ABV.....Above
ACC.....Accessible
ACOUS.....Acoustic (al)
ACP.....Acoustical Concrete Paving
ACU.....Air Conditioning Unit
AWT.....Acoustical Wall Treatment
AD.....Access Door
AD.....Area Drain
ADC.....Automatic Door Closer
ADDL.....Additional
ADH.....Adhesive
ADJ.....Adjustable
ADJC.....Adjacent
AFF.....Above Finish Floor
AFG.....Above Finished Grade
AFS.....Above Finished Slab
AGGR.....Aggregate
AHR.....Anchor
AHU.....Air Handling Unit
AL.....Aluminum
ALM.....Alarm
ALT.....Alternate
AMT.....Amount
ANN.....Annunciator
ANOD.....Anodized
ANT.....Antenna
AP.....Access Panel
APPROX.....Approximate (ly)
ARCH.....Architect (ural)
ASPH.....Asphalt
ASSN.....Association
ASSY.....Assembly
AC.....Acoustic Ceiling
ATCH.....Attachment
AWG.....American Wire Gage

B.O.F.....Bottom of Footing
B.U.....Built Up
B.U.R.....Built Up Roof
BB.....Bulletin Board
BC.....Bridge Clip
BD.....Board
BETW.....Between
BEV.....Bevel
BITUM.....Bituminous
BLDG.....Building
BLKG.....Blocking
BLW.....Below
BM.....Beam
BM.....Bench Mark
BOH.....Back of House
BOT.....Bottom
BP.....Base Plate
BRDG.....Bridging
BRG.....Bearing
BRKT.....Bracket
BRS.....Brass
BRZ.....Bronze
BS.....Both Sides
BSMT.....Basement

C.....Civil
CAB.....Cabinet
CPT.....Carpet
CAV.....Cavity
C.B.....Catch Basin
CEM.....Cement
CER.....Ceramic
CFM.....Cubic Foot per Minute
CFLG.....Counter Flashing
C & G.....Curb and Gutter
C.G.....Corner Guard
C.H.....Ceiling Height
CHAN.....Channel
CHFR.....Chamfer
CHK BD.....Chalk Board
CIP.....Cast-in-Place
CJ.....Construction Joint
CL.....Center Line
CLG.....Ceiling
CLJ.....Control Joint
CLO.....Closet
CLR.....Clear
CMPST.....Composite
CMU.....Concrete Masonry Unit
CNR.....Corner
CNTR.....Counter
CO.....Cased Opening
C.O.....Clean Out
COL.....Column
COMB.....Combination
COMP.....Compact
COMPL.....Compliance
COMPT.....Compartment
CONC.....Concrete
CONF.....Conference
CONN.....Connection
CONSTR.....Construction
CONT.....Continuous (ation)
CONTR.....Contract (or)
COORD.....Coordinate
CORR.....Corridor
COV PL.....Cover Plate
C.P.....Control Panel
CPT.....Carpet
CRC.....Cold Rolled Channel
CRL.....Carrel
CS.....Cast Stone
C.S.B.....Concrete Splash Block
CSMT.....Casement
CSWK.....Casework
CT.....Ceramic Tile
CTD & R.....Combination Towel Dispenser & Receptacle
CTR.....Center
CTSK.....Countersunk
CU.....Cubic
CUB.....Cubicle
CYL L.....Cylinder Lock

(D).....Demolish
D.....Depth
D.A.....Drainage Area
D.CL.....Door Closer
D.F.....Douglas Fir
D.H.....Double Hung
DBL.....Double
DIA.....Diameter
DEG.....Degree
DEMO.....Demolition
DEPT.....Department
DET.....Detail
DF.....Drinking Fountain
DFR.....Door Frame
DIF.....Difference
DIFF.....Diffuser
DIM.....Dimension
DISP.....Dispenser
DIST.....Distance
DIV.....Divider
DLV.....Door Louver
DMPF.....Dampproofing
DMPR.....Damper
DN.....Down
DOP.....Door Opening
DR.....Door
DS.....Downspout
DSP.....Dry Standpipe
DST.....Door Stop
DT.....Drain Tile
DUPL.....Duplicate
DWG.....Drawing
DWR.....Drawer

(E).....Existing
E.....East
E.....Electrical
EA.....Each
EDF.....Electric Drinking Fountain
EF.....Electric Fan
EJ.....Expansion Joint
EL.....Elevation
ELAST.....Elastomeric
ELEC.....Electrical
ELEV.....Elevator
EMER.....Emergency
EMP.....Electrical Metallic Tubing
ENAM.....Enamel
ENCL.....Enclosure
ENGR.....Engineer
EO.....Electrical Outlet
E.O.S.....Edge of Slab
EP.....Electrical Panel
EQ.....Equal
EQPT.....Equipment
EQUIV.....Equivalent
ERECT.....Erection
ESMT.....Easement
EST.....Estimate
ETR.....Existing to Remain
EWC.....Electric Water Cooler
EXC.....Excavate
EXIST.....Existing
EXP BT.....Expansion Bolt
EXP.....Expanded/Expansion
EXP JT.....Expansion Joint
EXT.....Exterior
EXTN.....Extension
EXTR.....Extrusion, Extruded

F/.....From
F&F.....Furniture and Furnishings
FA.....Fire Alarm
FBD.....Fiberboard
FD.....Floor Drain
FDMPR.....Fire Damper
FDN.....Foundation
FEC.....Fire Extinguisher Cabinet
FEXT.....Fire Extinguisher
FF.....Finish Floor
FGL.....Fiberglass
FH.....Fire Hose
FHC.....Fire Hose Cabinet
FHCS.....Flat Head Counter Sunk
F.H.V.E.C.....Fire Hose Valve and Extinguisher Cabinet
F.H.W.S.....Flat Head Wood Screw
FIN.....Finish
FIN.FL.....Finish Floor
FIN GR.....Finish Grade
FIXT.....Fixture
FL.....Floor
FLDG.....Folding
FLR.....Floor (ing)
FLUOR.....Fluorescent
FOC.....Face of Concrete
FOF.....Face of Finish
FOM.....Face of Masonry
FOS.....Face of Studs
FOSTL.....Face of Steel
FPRF.....Fireproofing
FR.....Fire Rating
FRP.....Fiber Reinforced Panel
F.R.P.T.....Fire Retardant Pressure Treated
F.R.T.....Fire Retardant Treated
FS.....Far Side
F.S.....Full Size
FSH.....Fire Sprinkler Head
FSP.....Fire Standpipe
FSTNR.....Fastener
F.T.....Fire Treated
FT.....Foot or Feet
FTG.....Footing
FURN.....Furniture
FURR.....Furring
FUT.....Future
F.V.C.....Fire Hose Valve Cabinet
FXTR.....Fixture

GA.....Gage or Gauge
GAL.....Gallon
GALV.....Galvanized
GB.....Grab Bar
GDR.....Guard Rail
GEN.....Generator
GENL.....General
G.F.R.C.....Glass Fiber Reinforced Concrete
GL.....Glass
GMKD.....Grand Master Keyed
GND.....Ground
GOVT.....Government
GP.....Gypsum Plaster
GR.....Grade (e)(ing)
GR.LN.....Grade Line
GRL.....Grille
GRP.....Group
GSKT.....Gasket
GRTG.....Grating
GSM.....Galvanized Sheet Metal
GT.....Grout
GUT.....Gutter
GV.....Gravity Vent
GWB.....Gypsum Wall Board
GYP BD.....Gypsum Board
GYP.....Gypsum
GYP PLAS.....Gypsum Plaster

H PLAM.....High Pressure Laminate
HB.....Hose Bib
HCMU.....Hollow Concrete Masonry Unit
HD.....Hand
H.D.....Hand Dryer
HDR.....Header
HDWD.....Hardwood
HDWE.....Hardware
HGR.....Hanger
HM.....Hollow Metal
H.M.D.....Hollow Metal Door
H.M.F.....Hollow Metal Frame
HNDRL.....Hand Rail
HO.....Hold-Open
HORIZ.....Horizontal
HR.....Hour
H.S.B.....High Strength Bolt
HT.....Height
HTG.....Heating
HTR.....Heater
HV.....Hose Valve
HVAC.....Heating, Ventilation and Air Conditioning
HYDR.....Hydraulic

ID.....Inside Diameter
IN.....Inch, Inches
INC.....Inside Corner
INCAND.....Incandescent
INDL.....Industrial
INFO.....Information
INL.....Inlet
INSTL.....Installation
INSUL.....Insulation
INSUL PNL.....Insulated Panel
INT.....Interior
INV.....Invert

JAN.....Janitor
J.B.....Junction Box
JST.....Joist
JT.....Joint

KD.....Kiln Dried
KO.....Knockout
K.O.P.....Knockout Panel
KPL.....Kick Plate

L.....Length
LAB.....Laboratory
LAM.....Lamination
LATL.....Lateral
LAV.....Lavatory
LB.....Pound
LBR.....Lumber
LD.....Linear Diffuser
LDG.....Landing
LDR.....Leader
LF.....Linear Foot
LG.....Length
LH.....Left Hand
LIB.....Library

LIN.....Linear
LIQ.....Liquid
LKR.....Locker
LL.....Live Load
LOC.....Location
LONG.....Longitudinal
LT.....Light
LT. WT.....Light Weight
LTG.....Lighting
LTG. PNL.....Lighting Panel
LVR.....Louver
LW PLAST.....Lightweight Plaster

M.B.....Machine Bolt
MAC RM.....Machine Room
MAINT.....Maintenance
MAN.....Manual
MAS.....Masonry
MATL.....Material
MAX.....Maximum
M.B.H.....Mop/Broom Holder
MECH.....Mechanical
MEP..... Mechanical/Electrical/Plumbing
MEMB.....Membrane
MTL.....Metal
MEZZ.....Mezzanine
MFR.....Manufacturer
MH.....Manhole
MIN.....Minimum
MIR.....Mirror
MISC.....Miscellaneous
MLDG.....Molding
M.O.....Masonry Opening
MOD.....Module (ar)
MTD.....Mounted
MTG.....Mounting
MULT.....Multiple
MWP.....Membrane Waterproofing

N.....North
NA.....Not Applicable
NIC.....Not in Contact
NPRN.....Neoprene
NO.....Number
NOM.....Nominal
NTS.....Not to Scale

O/.....Over
OA.....Overall
O.C.....On Center
OD.....Outside Diameter
OFCI...Owner Furnished, Contractor Installed
OFOI.....Owner Furnished, Owner Installed
OFF.....Office
OPNG.....Opening
OPP.....Opposite
OPP HD.....Opposite Hand
OUC.....Outside Corner
OVC.....Over Current
OVFL.....Overflow
OVHD.....Overhead
PLBG.....Plumbing
PAR.....Parallel
PC, POLYCARB.....Polycarbonate

P.C. CON.....Pre-Cast Concrete
PCP.....Portland Cement Plaster
PED.....Pedestal
PERF.....Perforated
PERIM.....Perimeter
PERM.....Permanent
PERP.....Perpendicular
PL.....Plate
PI.P.....Poured-in-Place
PLAM.....Plastic Laminate
PLAS.....Plaster
PLYWD, PWD.....Plywood
PNL.....Panel
PT, PTD.....Paint
POL.....Polished
POLY.....Polyethylene
POS.....Positive
PREFAB.....Prefabricated
PREFIN.....Prefinished
PR.....Pair
PROJ.....Project
PROP.....Property
P.SH.....Purse Shelf
P.T.....Pressure Treated
PTN.....Partition
P.T.R.....Paper Towel Receptacle
PTD.....Paint
PV.....Photovoltaic
PVC.....Polyvinyl Chloride

QT.....Quart
QT.....Quarry Tile
QTR.....Quarter
QTY.....Quantity
QUAL.....Quality

R.....Riser
RAD.....Radius
RBR.....Rubber
RCP.....Reflected Ceiling Plan
R.D.....Roof Drain
REC.....Recessed
RECMD.....Recommended (ation)
REF.....Refer (ence)
REFR.....Refrigerator
REINF.....Reinforce (d) (ing) (ment)
REM.....Removable
REQD.....Required
REQMTS.....Requirements
RESIL.....Resilient
RFG.....Roofing
RGTR.....Register
RH.....Right Hand
RLG.....Railing
RM.....Room
RND.....Round
R.O.....Rough Opening
R.W.C.....Rain Water Conductor
R.W.L.....Rain Water Leader

S.....South
S.A.D.....See Architectural Drawings
SAN.....Sanitary
SASF.....Self Adhered Sheet Flashing
SAWDF..Self Adhered Window & Door Flashing
S.B.....Splash Block
SC.....Solid Core
S.C.D.....See Civil Drawings
SCHED.....Schedule
S.DET.....Smoke Detector
SD.....Storm Drain
SECT.....Section
S.E.D.....See Electrical Drawings
S.EX.D.....See Exhibit Drawings
SF.....Square Feet
SGL.....Single
SHT.....Sheet (ing)
SHV.....Shelves (ing)
SIM.....Similar
SL.....Slope
S.L.A.D.....See Landscape Drawings
SLV.....Sleeve
S.M.D.....See Mechanical Drawings
SMS.....Sheet Metal Screws
SND.....Sanitary Napkin Dispenser
SNR.....Sanitary Napkin Receptacle
SPC.....Suspended Plaster Ceiling
S.P.D.....See Plumbing Drawings
SPEC.....Specification
SPKLR.....Sprinkler
SPKR.....Speaker
SPLY.....Supply
SQ.....Square
SQ FT.....Square Foot
SQ IN.....Square Inch
SQ YD.....Square Yard
SS.....Sanitary Sewer
S.STL.....Stainless Steel
S.S.M.B.....Stainless Steel Machine Bolt
S.S.D.....See Structural Drawings
STA.....Station
STD.....Standard
STL.....Steel
STOR.....Storage
STRUCT.....Structure (al)
SURF.....Surface
SUSP.....Suspended
SUSP. CLG.....Suspended Ceiling
SVCE.....Service
SVCE.SK.....Service Sink
S.W.....Sidewalk

SYM.....Symbol
SYS.....System

T.....Tee
T.C.S.....Teme-Coated Stainless Steel
T.D.R.....Towel Dispenser/Receptacle
T&G.....Tongue and Groove
TEL.....Telephone
TEMP.....Temperature or Temporary
TER.....Terrazzo
THK.....Thickness
THRES.....Threshold
THRU.....Through
TK BD.....Tack Board
TMPD.....Tempered
T.O.....Top of
T.O.B.....Top of Beam
T.O.C.....Top of Curb
T.O.P.....Top of Pavement
T.O.SL.....Top of Slab
T.O.S.....Top of Steel
T.O.W.....Top of Wall
TPH.....Toilet Paper Holder
TRANS.....Transparent
TRD.....Tread

TS.....Tube Steel
TV.....Television
TYP.....Typical

UFCI...Owner Furnished, Contractor Installed
UFUI.....Owner Furnished, Owner Installed
UNEX.....Unexcavated
UNFIN.....Unfinished
UON.....Unless Otherwise Noted
UTIL.....Utility

VAP.....Vapor
VAP.BAR.....Vapor Barrier
VAP PRF.....Vapor Proof
VAT.....Vinyl Asbestos Tile
VAV.....Variable Air Volume
VB.....Vinyl Base
VCT.....Vinyl Composition Tile
VDT.....Video Display Terminal
VENT.....Ventilator
V.E.J.....Vertical Expansion Joint
VERT.....Vertical
VEST.....Vestibule
VFAT.....Vinyl Faced Acoustic Tile
VIF.....Verify In Field
VIN.....Vinyl
VNR.....Veneer
VTR.....Vent through Roof
VWC.....Vinyl Wall Covering

W.....Water
W.....West
W.....Width
W/.....With
WO.....Where Occurs
W/O.....Without
W/D.....Washer/Dryer
WC.....Water Closet
WD.....Wood
WDW.....Window
W GL.....Wire Glass
W.H.....Wall Hung
WLD.....Welded
WP.....Waterproof (ing)
W P.....Working Point
WP MEMB.....Waterproof Membrane
WR.....Water Resistant
WS.....Weatherstripping
WSCT.....Wainscot
WT.....Weight
WTRPRF.....Waterproofing
WSP.....Wet Stand Pipe

ARCH FLOOR PLAN SYMBOLS

DIMENSION SYMBOLS

10' - 0" — DIMENSION SHOWN TO:
- STRUCTURAL GRID
- LAYOUT GRID
- GRID LINE TYPICAL

10' - 0" — DIMENSION SHOWN TO:
- CENTERLINE OF ASSEMBLY
- CENTER OF OPENING
- CENTER OF EQUIP/ FURN
- CENTER LINE TYPICAL

10' - 0" — DIMENSION SHOWN TO:
- PARTITION ASSEMBLY
- EDGE OF DOOR OPENING
- OTHER BUILDING ELEMENT
- WPT INDICATED ON DETAIL

GENERAL SYMBOLS

- BASE CABINETS
- BASE AND WALL CABINETS
- WALL CABINETS
- TOILET PARTITION AND DOOR
- HANDRAIL
- BUMPER GUARD
- CG CG — CORNER GUARD
- EG — EDGE GUARD
- OVERHEAD ITEMS
- UNDER-COUNTER ITEMS
- NIC — NOT-IN-CONTRACT ITEMS

FEXT — FIRE EXTINGUISHER BRACKET MOUNTED

FEC — FIRE EXTINGUISHER SURFACE MOUNTED

FEC — FIRE EXTINGUISHER CABINET SEMI-RECESSED

FEC — FIRE EXTINGUISHER CABINET RECESSED

PLUMBING SYMBOLS

- TOILET - WALL HUNG
- URINAL - FLOOR/WALL HUNG
- LAVATORY - COUNTERTOP
- LAVATORY - PEDESTAL/WALL HUNG
- UTILITY SINK
- DRINKING FOUNTAIN / EWC
- JANITOR'S RECEPTOR
- BATHTUB
- SHOWER
- FD — FLOOR DRAIN IN SLOPING FLOOR

DOOR AND INTERIOR OPENINGS SYMBOLS

- 122 — DOOR OPENING MARK
- SINGLE OPENING DOOR
- DOUBLE ACTING DOOR
- PAIR DOORS - EQUAL SIZES
- PAIR DOORS - UNEQUAL SIZES
- PAIR DOORS - DOUBLE EGRESS
- DOOR WITH SIDE LIGHT
- SLIDING DOOR - BETWEEN JAMBS
- SLIDING POCKET DOOR
- 2 PANEL BI-FOLD DOOR
- PAIR - BI FOLD DOOR
- OVERHEAD ROLLING DOOR
- INTERIOR GLAZED WINDOW

ARCHITECTURAL REFERENCE SYMBOLS

BUILDING SECTION
X / AX.XX — SIM
- BLDG SECTION NUMBER
- DIRECTION OF VIEW
- SHEET WHERE DRAWN

WALL SECTION
X / AX.XX — SIM
- WALL SECTION NUMBER
- DIRECTION OF VIEW
- SHEET WHERE DRAWN

EXTERIOR ELEVATION
AX.X.X / X
- ELEVATION NUMBER AND DIRECTION
- SHEET WHERE DRAWN

PLAN DETAIL REFERENCE
X / AX.XX — SIM
- DETAIL NUMBER
- SHEET WHERE DRAWN, HYPHEN INDICATES DETAIL ON SAME SHEET.

DETAIL REFERENCE
X / AX.XX — SIM
- DETAIL NUMBER
- SHEET WHERE DRAWN, HYPHEN INDICATES DETAIL ON SAME SHEET.

SECTION DETAIL REFERENCE
X / AX.XX — SIM
- ELEVATION NUMBER
- SHEET WHERE DRAWN

INTERIOR ELEVATION REFERENCE
AX.XX / X
- ELEVATION NUMBER AND DIRECTION OF VIEW
- SHEET WHERE DRAWN

PARTITION TYPE IDENTIFICATION MARK
A3E3 — SEE PARTITION SYMBOL DESCRIPTION ON SHEET A9.X.X

DOOR IDENTIFICATION MARK
A3E3 — DOOR OPENING MARK

WINDOW AND LOUVER TYPE MARK
W-X — WINDOW MARK

LEVEL LINE
SECOND LEVEL +10'-0" — NAME OF LEVEL; INDICATES HEIGHT ABOVE PROJECT DATUM

ROOM NAME AND NUMBER
Room Name
101

REVISION NUMBER AND EXTENT
1 — REVISION NUMBER - SEE REVISION HISTORY ON THE TITLE BLOCK OF EACH SHEET
EXTENT OF CURRENT REVISION

KEYED NOTE MARK
1 — SEE CORRESPONDING NUMBERED KEY NOTE ON SHEET WHERE REFERENCE OCCURS

MATCH LINE REFERENCE
A101 — DRAWING WHERE CONTINUATION IS FOUND; DRAWING SIDE

DRAWING TITLE SYMBOLS
View Name — BASIC DRAWING TITLE
SCALE: 1/8" = 1'-0"

LAYOUT GRID LINES
EXISTING GRID IDENTIFICATION
NEW GRID IDENTIFICATION

NORTH ARROW REFERENCE
PROJECT NORTH

ARCHITECTURAL MATERIAL INDICATIONS

SECTION
- EARTH
- AGGREGATE BASE COURSE
- CONCRETE
- CONCRETE MASONRY UNIT
- BRICK MASONRY
- STEEL, STAINLESS STEEL
- ALUMINUM
- STONE
- SOLID SURFACE
- WOOD FRAMING - CONTINUOUS
- WOOD FRAMING - DISCONTINUOUS
- PLYWOOD
- WOOD
- RIGID INSULATION
- MINERAL FIBER INSULATION
- BATT INSULATION
- PLASTER, MORTAR, SAND, FIREPROOFING,
- GYPSUM BOARD
- COMPOSITE BOARD
- ACOUSTIC CEILING TILE
- ACOUSTIC PANEL
- BUILDING PAPER & FABRIC FLASHING
- EXPANDED METAL LATH
- WIRE MESH

ELEVATION - PLAN - RCP
- PLASTER
- VERTICAL GRAIN WOOD
- HORIZONTAL GRAIN WOOD
- STONE
- TERRAZZO
- GLASS
- PERFORATED METAL
- GYPSUM BOARD CEILING

PROJECT GENERAL NOTES

1. VERIFY ALL DIMENSIONS BEFORE PROCEEDING WITH THE WORK. NOTIFY THE ARCHITECT IMMEDIATELY OF ANY DISCREPANCY OR VARIATION. DO NOT PROCEED WITH AFFECTED WORK UNTIL THE VARIATION OR DISCREPANCY IS RESOLVED.
2. DO NOT SCALE DRAWINGS. IF UNABLE TO LOCATE DIMENSIONS FOR ANY ITEM OF WORK, CONSULT ARCHITECT FOR DIRECTION BEFORE PROCEEDING.
3. PLAN DIMENSIONING: DIMENSIONS ARE TO:
   FACE OF INTERIOR GYPSUM BOARD
   FACE OF EXT. FINISH
   CENTER LINE OF COLUMN GRID
   FACE OF DOOR JAMBS
4. HEIGHTS SHOWN OR NOTED AFF (ABOVE FINISH FLOOR) ARE TO BE MEASURED FROM TOP OF FINISH FLOOR MATERIAL. EXCEPTIONS: AT AREAS THAT RECEIVE CARPET OR RESILIENT FLOORING, HEIGHTS ARE MEASURED FROM TOP OF CONCRETE.
5. IF DRAWING IS LESS THAN 30" X 42", IT HAS BEEN REDUCED FROM ORIGINAL.
6. DETAILS SHOWN ON DRAWINGS SHALL BE INCORPORATED INTO THE PROJECT AT ALL APPROPRIATED LOCATIONS WHETHER SPECIFICALLY REFERENCED AT EACH LOCATION OR NOT.
7. INSTALL NECESSARY BLOCKING, BACKING, FRAMING, HANGERS, AND OTHER SUPPORT FOR FIXTURES, EQUIPMENT, SHELVING AND CASEWORK.
8. PROVIDE GYPSUM WALL BOARD OR PLASTER BEHIND AND AROUND ALL OPENINGS INCLUDING WALL CABINETS, RECESSED FIRE HOSE VALVE AND FIRE EXTINGUISHER CABINETS, ELECTRICAL PANELS AND ELECTRICAL BOXES WHERE REQUIRED BY CODE TO MAINTAIN FIRE RATED CONSTRUCTION SHOWN ON DRAWINGS.
9. THE CONTRACTOR SHALL BE RESPONSIBLE FOR AND SHALL SUPERVISE ALL CUTTING AND PATCHING OF FINISHED WORK ALREADY INSTALLED IF MADE NECESSARY BY ERRORS, CHANGES, OR OTHER REASONS. ALL REPLACEMENT WORK SHALL MATCH ADJOINING SURFACES WITH NO VISIBLE MARKINGS OF REDO/REPAIR WORK.
10. FOR EQUIPMENT WEIGHING MORE THAN 400 LBS AND SUPPORTED DIRECTLY ON THE FLOOR OR ROOF STRUCTURE AND FOR TEMPORARY OR MOVABLE EQUIPMENT AND FOR EQUIPMENT WEIGHING MORE THAN 20 LBS THAT IS SUPPORTED BY VIBRATION DEVICES SUSPENDED FROM THE ROOF, WALL OR FLOOR ANCHORAGE MUST BE ENGINEERED BY A PROFESSIONAL ENGINEER LICENSED IN THE STATE OF CALIFORNIA TO MEET CCR TITLE 24 PART 2. COORDINATE WITH STRUCTURAI DWGS
11. IT SHALL BE THE RESPONSIBILITY OF THE CONTRACTOR TO PROVIDE ALL SUPPORTS, ANCHORS, CLIPS, FASTENERS, BRACES, AND REINFORCEMENTS FOR ALL ASSEMBLIES, SYSTEMS, FIXED EQUIPMENT, ACCESSORIES, AND SO FORTH, THAT ARE A PART OF THE STRUCTURAL SYSTEM, HAVE BEEN SHOWN, SPECIFIED, OR SIZED OR ARE REASONABLY REQUIRED TO COMPLETE THE WORK IN CONFORMANCE WITH THE CONTRACT DOCUMENTS. THE CONTRACTOR SHALL ALSO PROVIDE CALCULATIONS FOR ALL SUCH ITEMS AS REQUIRED BY THE AUTHORITY HAVING JURISDICTION.
12. IF A DISCREPANCY EXISTS BETWEEN DRAWINGS, BETWEEN DRAWINGS AND SPECIFICATIONS OR WITHIN THE SPECIFICATIONS, SUCH DISCREPANCY SHALL BE BROUGHT TO THE ATTENTION OF THE ARCHITECT PRIOR TO INSTALLATION OF SAID WORK. DO NOT PROCEED WITH AFFECTED WORK UNTIL THE VARIATION OR DISCREPANCY IS RESOLVED.
13. THE CONTRACTOR SHALL NOT FABRICATE OR INSTALL ANY WORK WHERE THEY HAVE REASONABLE KNOWLEDGE THAT THE CONTRACT DOCUMENTS MAY BE IN CONFLICT WITH APPLICABLE CODES OR INTERPRETATION OF THE AUTHORITY HAVING JURISDICTION. ANY SUCH INFORMATION SHALL BE IMMEDIATELY BROUGHT TO THE ATTENTION OF THE ARCHITECT WHO SHALL ISSUE A RESOLUTION OF THE CONFLICT.
14. SHOULD ANY CONDITIONS DEVELOP NOT COVERED BY THE CONTRACT DOCUMENTS SUCH THAT THE FINISHED WORK WILL NOT COMPLY WITH TITLE 24 OF THE CALIFORNIA CODE OF REGULATIONS, A CHANGE ORDER DETAILING AND SPECIFYING THE REQ**UIRED WORK SHALL BE SUBMITTED TO AND APPROVED BY THE OWNER BEFORE PROCEEDING WITH THE WORK.**

ARCHITECTURAL GENERAL NOTES

1. THE FOLLOWING GENERAL NOTES APPLY TO ALL A-SERIES DRAWINGS.
2. FOR GENERAL NOTES APPLICABLE TO ALL DRAWINGS REFER TO THE "PROJECT GENERAL NOTES".
3. FOR NON A-SERIES GENERAL NOTES AND SYMBOLS REFER TO APPLICABLE DRAWINGS.
4. THE A-SERIES DRAWINGS ARE A PART OF A LARGER SET OF DRAWINGS. REVIEW AND COORDINATE THE WORK ALL ASPECTS OF THE CONTRACT DOCUMENTS.

MODULAR LAYOUT DETAIL NUMBER

20	16	12	8	4
19	15	11	7	3
18	14	10	6	2
17	13	9	5	1

DETAIL MODULE LAYOUT

DETAILS ARE NUMBERED ACCORDING TO THEIR LOCATION ON EACH SHEET AND ARE NOT NUMBERED CONSECUTIVELY. EACH MODULE MAINTAINS THE NUMBER ASSOCIATED WITH IT

THIS SYSTEM CAN BE APPLIED TO ANY DRAWING THAT CONTAINS MULTIPLE IMAGES. THE IMAGES ARE NUMBERED ACCORDING TO THE MODULE SYSTEM SHOWN ILLUSTRATED TO THE LEFT

EACH DETAIL MAY OCCUPY ONE OR MORE WHOLE MODULES. THE DETAIL MODULE IS USED TO ESTABLISH THE IDENTIFYING LABEL FOR EACH DETAIL, NOT TO LIMIT THE SIZE OF THE DETAIL

20			8	
19	15		7	
		10	6	2
17		9	5	1

DETAIL NUMBERING EXAMPLE

THE NUMBER OF THE MODULE WHICH OCCURS IN THE LOWER LEFT CORNER OF A SINGLE MODULE OR SEVERAL MODULES GROUPED TOGETHER WILL DEFINE THE FINAL DETAIL NUMBER AS SHOWN IN THE ILLUSTRATION TO THE LEFT. ALTHOUGH THE MODULE NUMBERS OCCUR IN CONSECUTIVE ORDER, NOT ALL NUMBERS ARE NECESSARILY USED ON EACH SHEET

Division of the State Architect

APPROVED
DIV. OF THE STATE ARCHITECT
APP: 02-119316 INC:
REVIEWED FOR
SS☐ FLS☐ ACS☑
DATE: 03/24/2022

Office of the State Fire Marshal

OFFICE OF THE STATE FIRE MARSHAL APPROVED FIRE AND PANIC ONLY
03/14/22
21-0498
Approval of this plan does not authorize or approve any omission or deviation from applicable requirements. Final approval is subject to field inspection. One set of approved plans shall be available on the project site at all times.

CSUS CHILD DEVELOPMENT CENTER
CALIFORNIA STATE UNIVERSITY, STANISLAUS
ONE UNIVERSITY CIRCLE
TURLOCK, CA 95382

ehdd.

PIER 1, BAY 2
THE EMBARCADERO
SAN FRANCISCO, CA 94111

INFO@EHDD.COM
+1 415-285-9193

Consultant

Stamp

LICENSED ARCHITECT
JENNIFER K. DEVIN
No. C-17844
Ren. 5-31-23
STATE OF CALIFORNIA

Printing	Date
95% CONSTRUCTION DOCUMENTS	06.25.2021
PERMIT SET	08.16.2021
PERMIT SET - DSA V2	12.15.2021
PERMIT SET - SFM	12.21.2021

Revisions and Description	Date

Scale
As indicated

Drawn by
Author

EHDD Job Number
20020

Sheet Title
ARCHITECTURAL ABBREVIATIONS AND SYMBOLS

Sheet Number
G0.02 V3

C:\Users\l.quinones\OneDrive - EHDD\Documents\20020-A-CSU STANISLAUS CDC- CENTRAL_l.quinones.rvt

12/10/2021 11:08:47 AM

PROJECT INFORMATION

1. SEE G1.06 FOR FIRE LIFE SAFETY PLAN

BUILDING CODE ANALYSIS — **SECTION NO. (CBC, u.o.n.)**

APPLICABLE BUILDING CODE

A. 2019 California Building Code (CBC)

Part 1 – California Administrative Code	
Part 2 - California Building Code	CBC
Part 3 – Electrical Code	CEC
Part 4 – Mechanical Code	CMC
Part 5 – Plumbing Code	CPC
Part 6 – Energy Code	
Part 7 – Not Used: Elevator Code Now will be Title 8 of CCR	
Part 9 – Fire Code	CFC
Part 10 – Building Conservation	
Part 11 – California Green Building Standards Code	CGBSC
Part 12 – Referenced Standards	

B. Americans with Disabilities Act (ADA) Title II, 2010

C. California Code of Regulations, Title 19 Public Safety

State Fire Marshal Regulations 2016 NFPA 13 Installation of Fire Sprinklers
2016 NFPA 24 Installation of Private Fire Service Mains & Their Appurtenances
2013 NFPA 25 California Ed., Inspection Testing & Maintenance of Water Based Fire Protection Systems
2016 NFPA 72 National Fire Alarm and Signaling Code

PROJECT DESCRIPTION

New construction of a child development and research center for higher education which contains offices, research spaces, and various sizes of daycare classrooms for children ages 5 and under. This includes exterior play yard spaces for the children, as well as study and gathering spaces for university students, faculty, staff and parents. The site includes short term drop-off and pick-up parking for parents, and a new fire access lane.

BUILDING ADDRESS Child Development Center
CSU Stanislaus
One University Circle
Turlock CA 95382

BUILDING SUMMARY

	Proposed:	Allowable:	SECTION NO. (CBC, u.o.n.)
Occupancy Groups:	B, E		304.1, 308.5 Exception, 308.5.1
Occ. Classification:	Mixed Use, Non-separated		506.2.2, 508.3.2
Building Height:	23' - 6" to roof monitor	40' (Sprinklered with Area Increase)	504.3, 508.3.2
Building Stories:	1	1 (Sprinklered with Area Increase)	504.4, 508.3.2
Building Area:			
Building SF:	14729		
Roof Overhang SF:	5247		
Total Building SF:	19976	36000 (S1)	506.2, 508.3.2
Construction Type:	VB		602.5
Sprinklered:	Automatic Fully Sprinklered including at Roof Overhang		903
Fire Alarm:	Automatic w/ one manual fire alarm box near Reception		907.2.3

BUILDING CODE ANALYSIS

3 OCCUPANCY — CHAPTER 3

Building Area	Occupancy	
Offices & Higher Education Spaces, Assembly Spaces and Storage with occupant load of 49 or less	Group B	303.1.2, 304.1
Daycare Facility 16 total children served in Infant classrooms (under 2 years of age) 24 total children served in Toddler classrooms (between ages 2-3) 48 total children served in Pre-K classrooms (between ages 3-5)	E	308.5.1

5 GENERAL BUILDING HEIGHTS AND AREAS — CHAPTER 5

5A: BUILDING HEIGHT & AREA

A. Multiple buildings on campus are on the same lot. For code purposes, assumed property lines are used. 503.1.2

5B: ALLOWABLE AREA AND HEIGHT

A. Table 504.3 Allowable building heights above grade plane 504.3, 508.3.2
Occupancy B (sprinklered), Type VB: 60 feet
Most Restrictive: Occupancy E (sprinklered w/ area increase), Type VB: 40 feet

B. Table 504.4 Allowable number of stories 504.4, 508.3.2
Occupancy B, (sprinklered), Type VB: 3 stories
Most Restrictive: Occupancy E (sprinklered w/ area increase), Type VB: 1 stories

C. Table 506.2: Allowable area factor in square feet 506.2, 508.3.2
Most Restrictive: Occupancy B, (S1), Type VB: 36,000 SF
Occupancy E (S1), Type VB: 38,000 SF

D. Mixed occupancy of Group B and E. 506.2.2, 508.3.2

5D: FIRE ACCESS

A. Maximum distance from fire lane to any point along the exterior wall of the building shall not exceed 150'. CFC 503.1.1

B. Fire Flow Requirements: Based upon the building area depicted above and CFC table B105.1(2) for type V-B the required fire flow is 3,750 gpm at 20 psi residual pressure and requires a 3 hour duration. Then applying reductions based upon CFC table B105.2 and compliance with 903.3.1.1. 3,750 x .25 = 938 gpm, minimum is 1,000 gpm at 20 psi for 2-hour CFC Appendix B105.2

C. Hydrants: Based on a building with an automatic sprinkler system, 1 minimum hydrant is required. Average Spacing Between Hydrants: 750 feet; Max distance from street to a hydrant: 375 feet CFC Appendix C and NFPA 13

6 FIRE RESISTIVE REQUIREMENTS FOR BUILDING ELEMENTS — CHAPTER 6

6A: CONSTRUCTION TYPE DESCRIPTION

1. Type VB construction; exterior walls are of any material permitted by this code [2019 CBC]. 602.5

6B: FIRE RESISTIVE REQUIREMENTS, CONSTRUCTION TYPE VB

A. Primary structural Frame:		0-hour	Table 601, g
B. Bearing Walls:	1. Interior:	0-hour	Table 601
	2. Exterior:	0-hour	Table 601
C. Nonbearing Walls:	1. Interior:	Non-rated	Table 601
	2. Exterior: Based on fire separation distance (Table 602, below)		Table 602

Table 602: Fire-Resistance Rating Requirements for Exterior Walls (based on Fire Separation Distance)	
10 ≤ x < 30 feet	0 hour
x ≥ 30 feet	0 hour

D. Floor construction & secondary members:		0-hour	Table 601
E. Roof construction & secondary members:		0-hour	Table 601

7 FIRE RESISTENCE RATED CONSTRUCTION — CHAPTER 7

7A: BUILDING SEPARATIONS (Fire Separation Distance)

A. East	23'-0" min	to assumed property line at edge of path
B. West	10'-0" min	to assumed property line at fire lane
C. North	30'-0" min	to centerline of Melones Drive
D. South	10'-0" min	to assumed property line at fire lane

7B: EXTERIOR WALL OPENINGS

Buildings whose exterior bearing walls, exterior nonbearing walls and exterior primary structural frame are not required to be fire-resistance rated shall be permitted to have unlimited unprotected openings. 705.8.1 Exception 2

8 INTERIOR FINISH — CHAPTER 8

A. Walls and ceilings can be classified in accordance with NFPA 286 803.1.1
B. Wall and ceiling finishes can also be classified by tests in accordance with ASTM E-84 803.1.2
C. Wall and Ceiling Finish Requirements based on Occupancy Table 803.13
There are no interior exit stairways, ramps, or passageways.
There are no corridors, or enclosures for exit access stairways and exit access ramps.

Group	Sprinklered Rooms and enclosed spaces
B	C
E	C

VICINITY PLAN

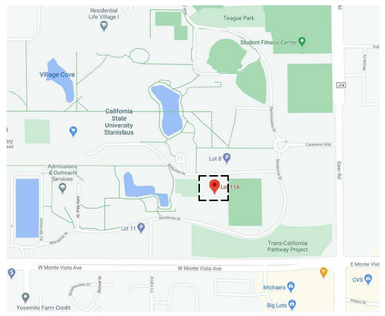

BUILDING CODE ANALYSIS CONTINUED

8 INTERIOR FINISH — CHAPTER 8

D. Interior floor finish 804
Class II 804.4.2

E. Suspended acoustical ceilings to be installed in accordance with ASTM C 635 or ASTM C 636 808.1.1.1

9 FIRE PROTECTION SYSTEMS: AUTOMATIC SPRINKLER SYSTEMS, AND FIRE ALARM SYSTEMS — CHAPTER 9

The most restrictive provisions of Chapter 9 that apply to nonseparated occupancies shall apply to the total nonseparated occupancy areas 508.3.1

9A Automatic Sprinkler Systems

A. Sprinkler system provided throughout the building. 903.2.6
B. Sprinklers installed in accordance with NFPA 13 903.3.1.1
C. Sprinklers required to be monitored by approved supervising station 901.6.1

9B Portable Fire Extinguishers

A. Portable Fire Extinguishers shall be installed. 906.1
B. Maximum distance of travel to extinguisher = 75 ft Table 906.3

9C Fire Alarm Systems 907
A. Group B Educational Facilities: Manual or Automatic fire alarm system shall be provided. 907.2.2.2
B. Group E Daycare: Automatic fire alarm system shall be provided. One additional manual fire alarm box shall be located at the administration office or location approved by the AHJ. This is the most restrictive provision. 907.2.3.10

10 MEANS OF EGRESS — CHAPTER 10

A. Occupant Load Factors

Function of Space	Occupant Load Factor
Assembly with fixed seats: unconcentrated	see section 1004.6
Assembly without fixed seats: unconcentrated	15 net
Business Areas	150 gross
Daycare	35 net
Educational Classroom Area	20 net
Accessory storage areas/Mechanical equipment rooms	300 gross

Table 1004.5

Accessory Storage Rooms are used for educational storage and supplies.
Mechanical Equipment Room houses hydronic HVAC equipment.

Outdoor Play Yards: Occupant Load shall be based on the sum of the two classroom occupant loads that uses each play yard as agreed with OSFM in a project preview meeting. 1004.7

B. Means of Egress Sizing

Egress width per occupant served, in sprinklered buildings

Use Area	Allowance for buildings with sprinklers and EV/ACS	
Other egress components	0.15 inches	1005.3.2 Exception 1

C. Minimum number of exits from each space 1006.2

B Occupancy	
Occupant Load	Number of Exits
1 thru 49	1
50 - 500	2

E Occupancy	
Occupant Load	Number of Exits
1 thru 49	1
50 - 500	2

The number of exits from foyers, lobbies, vestibules or similar spaces need not be based on cumulative occupant loads for areas discharging through such spaces, but the capacity of the exits from such spaces shall be based on applicable cumulative occupant loads 1006.2.1, exception 1

D. Maximum Common Path of Travel, With Sprinkler System 1006.2.1

Occupancy	Travel Distance
B	100 feet
E	75 feet

E. Exit Configuration
Where a building is equipped throughout with an automatic sprinkler system in accordance with Section 903.3.1.1 or 903.3.1.2, the separation distance shall be not less than one-third the length of the maximum overall diagonal dimension of the area served. 1007.1.1 Exception 2

Building has exits on all sides.

F. Accessible spaces shall be provided with not less than one accessible means of egress. Where more than one means of egress are required by Section 1006 or 1022 from any accessible space, each accessible portion of the space shall be served by accessible means of egress in at least the same number as required by Section 1015.1 or 1021.1. In addition to the requirements of this chapter, means of egress, which provide access to, or egress from, buildings for persons with disabilities, shall also comply with the requirements of Chapter 11A or 11B as applicable. 1009.1

G. Travel distance – maximum allowable travel distance from any location to an exit, with sprinkler system: Table 1017.2

Occupancy	Travel Distance
Group B	300 feet
Group E	250 feet

H. Corridors:
In sprinkler protected B: not rated 1020.1
In sprinkler protected E: not rated CFC Table 1020.1

1. Minimum Corridor Width Table 1020.2

Occupancy	Minimum Width (inches)
Any facility not listed in this table	44

2. Dead ends may not exceed 50 feet in Group B and E occupancies 1020.4
Building has exits on all sides, therefore there are no dead ends.

I. Exit Signs
1. Not required in rooms or areas requiring only one exit 1013.1.1
2. Required at exit and exit access doors and other areas so that no place in a corridor is more than 100 feet from an exit sign 1013.1
3. Exit signs may be either internally or externally illuminated 1013.3
4. Illumination required to be on emergency power with 90 minute duration 1013.6.3
5. Emergency evacuation signage required. Title 19

15 ROOF ASSEMBLY AND ROOFTOP STRUCTURES — CHAPTER 15

A. Roofing classification Class C for Type VB Building Table 1505.1

27 EMERGENCY POWER — CHAPTER 27

A. Where required: 2702.2
1. Exit signs 1013, 2702.2.6
2. Means of egress illumination 1008, 2702.2.13

LOCAL FIRE AUTHORITY APPROVAL LETTER

STATE OF CALIFORNIA —NATURAL RESOURCES AGENCY — Gavin Newsom, Governor

DEPARTMENT OF FORESTRY AND FIRE PROTECTION
Office of the State Fire Marshal
P.O. Box 944246 SACRAMENTO, CA 94244-2460 (916) 568-2993
Website: www.osfm.fire.ca.gov

LOCAL FIRE AUTHORITY – ACCESS APPROVAL

Agency & Project Name: CSU Stanislaus - Child Development Center

Address: One University Circle, Turlock, CA 95382

GovMotus Control Number: 21-N-0498-CP-DR

Pursuant to CCR Title 19 §3.00 and §3.05, the California State Fire Marshal is requesting certification from the local fire authority that the above sections are met to their satisfaction.

This form shall be scanned to the accompanying fire access plan reflecting all items under consideration, and wet signed by the local fire authority. Please complete all applicable items based on scope. California State Fire Marshal project approval may be delayed until this form is completed and returned. If you have any questions, please contact the California State Fire Marshal Plan Review Section at (916) 568-2993.

Approved	Yes	No	
Fire Department Access	✓		
Fire Department Connection	✓		
Fire Hydrant	✓		
Fire Alarm Annunciator	✓		
Fire Alarm Control Panel	✓		
Knox Box	✓		
Emergency Responder Radio Coverage		·	NA - single story, primarily wood construction
Medical Emergency Service Elevator			
Fire Service Access Elevator			
Bi-Directional Amplification (BDA) Systems			

Local Fire Authority: Turlock Fire Dept.
Address: 244 N. Broadway
City/State/ZIP: Turlock CA 95380

Approval issued by: Mark Gomez
Rank/Title: Fire Marshal
Phone Number: 209-668-5119
Signature: [signature] Date: 4-19-21

"The Department of Forestry and Fire Protection serves and safeguards the people and protects the property and resources of California."

FIRE WATER ACCOMMODATIONS

```
                HYDRONICS : HYDRANT FLOW TEST 6.0 FOR WINDOWS - REPORT
-------------------------------------------------------------------------------
ENGINEERS : CITY OF TURLOCK FIRE DEPARTMENT. (209) 668-5071.
ADDRESS   : 156 South Broadway, Suite 130, Turlock CA 95380.
-------------------------------------------------------------------------------
File: S:\Fire\Public\HYDRFT42\673.HFT
Test Hydrant: S-53/R-44          Date: 12/07/2021                Time: 11:37
Location: CSUS Campus
Latitude:                        Longitude:
Elevation:  0                    Tester: Gomez
Remarks:

-------------------------------------------------------------------------------
HYDRANT          GAGE          DIAMETER        CORFF        PITOT          FLOW
-------------------------------------------------------------------------------
                    0             2.5   in        0.9          32   Psi      949   Gpm
-------------------------------------------------------------------------------
Gage:       Static :  60 Psi      Residual:  42 Psi     Flow:   949   Gpm
-------------------------------------------------------------------------------
Copyright© 2016, Hydronics Engineering. (800) 845-9819.
```

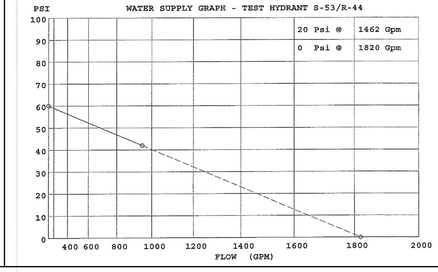

SITE CONTEXT, FIRE ACCESS, HYDRANT LOCATIONS

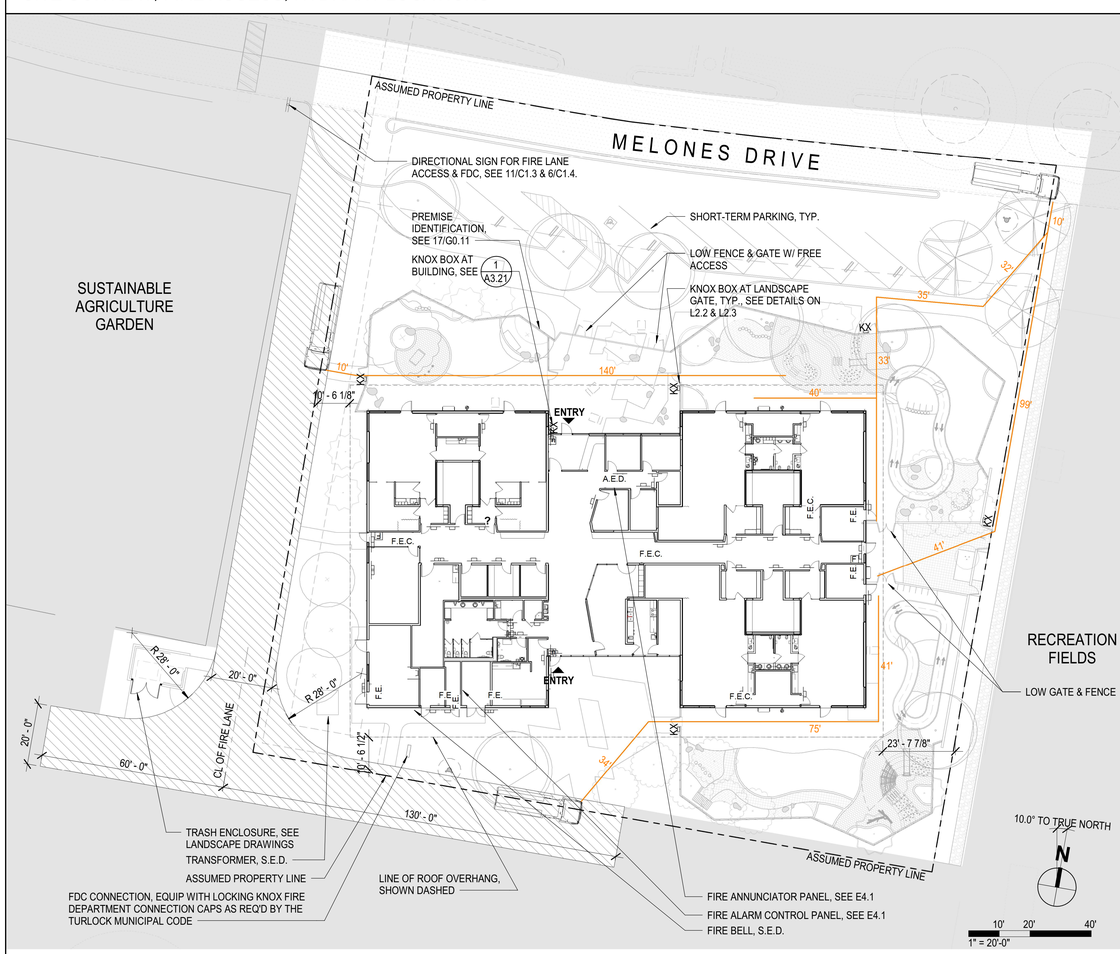

LEGEND

- CHILD DEVELOPMENT CENTER PROJECT SCOPE OF WORK
- CAMPUS UTILITY INFRASTRUCTURE SCOPE
- FIRE ACCESS LANE (13'-6" VERTICAL CLEARANCE TO BE MAINTAINED)
- ASSUMED PROPERTY LINE
- HOSE PULL (150' U.O.N.)
- KX KNOX BOX
- FIRE HYDRANT (W/ 3' CLEARANCE)

PLAN NOTES

1. SEE A0.11 FOR SITE AND BUILDING ACCESSIBLITY
2. ALL FENCES AND GATES ARE 5'-0" MIN. U.O.N.

Division of the State Architect

APPROVED
DIV. OF THE STATE ARCHITECT
APP: 02-119316 INC:
REVIEWED FOR
SS☐ FLS☐ ACS☑
DATE: 03/24/2022

Office of the State Fire Marshal

OFFICE OF THE STATE FIRE MARSHAL APPROVED FIRE AND PANIC ONLY
03/14/22
21-0498
Approval of this plan does not authorize or approve any omission or deviation from applicable regulations. Final approval is subject to field inspection. One set of approved plans shall be available on the project site at all times.

CSUS CHILD DEVELOPMENT CENTER

CALIFORNIA STATE UNIVERSITY, STANISLAUS
ONE UNIVERSITY CIRCLE
TURLOCK, CA 95382

ehdd.

PIER 1, BAY 2
THE EMBARCADERO
SAN FRANCISCO, CA 94111

INFO@EHDD.COM
+1 415-285-9193

Consultant

Stamp

LICENSED ARCHITECT
JENNIFER K DEVER
No. C-34447
Ren. 5-31-23
STATE OF CALIFORNIA

Printing — Date

95% CONSTRUCTION DOCUMENTS	06.25.2021
PERMIT SET	08.16.2021
PERMIT SET - DSA V2	12.15.2021
PERMIT SET - SFM	12.21.2021

Revisions and Description — Date

Scale
1" = 20'-0"

Drawn by
Author

EHDD Job Number
20020

Sheet Title
PROJECT INFORMATION

Sheet Number
G0.05 V3

C:\Users\s.sanchez\Documents\20020-A-CSU STANISLAUS CDC- CENTRAL_ehdd-sjling.rvt

12/10/2021 11:32:52 AM

FIRE LIFE SAFETY SHEET NOTES

1. SEE G0.05 FOR CODE ANALYSIS AND FIRE ACCESS INFORMATION.
2. ROOF OVERHANGS TO BE FULLY-SPRINKLERED.
3. ALL DOORS AND GATES ARE MINIMUM 3'-0" PROVIDING A MINIMUM 32" CLEAR OPENING WIDTH. LARGEST OCCUPANT LOAD IS 103 OCCUPANTS *0.20=20.6" REQUIRED WIDTH. HORIZONTAL EGRESS WIDTHS ARE NOT INDIVIDUALLY NOTED ON FIRE LIFE SAFETY PLANS. SEE DOOR SCHEDULE AND DIMENSIONED FLOOR PLANS TO VERIFY HORIZONTAL WIDTHS AS REQUIRED.
4. SEE A2.01 FLOOR PLAN FOR ALL DIMENSIONS, WALL TYPES, AND DOOR REFERENCES.
5. SEE FURNITURE PLAN FOR OWNER FURNISHED AND INISTALLED EQUIPMENT AND APPLIANCES.
6. SEE A0.11 FOR ADDITIONAL GATE TAGS.

FLOOR OCCUPANCY LOAD

OCCUPANT LOAD SCHEDULE

NAME	AREA	OLF	OCCUPANT LOAD
ASSEMBLY CONCENTRATED	59 SF	5	12
BUSINESS - OFFICES	3,368 SF	150	23
COMMUNICATION	97 SF	300	1
ELECTRICAL	133 SF	300	1
FRONT YARD FIXED SEATS	435 SF	FIXED SEATS	7
INFANT DAYCARE	949 SF	35	28
INFANT DAYCARE	949 SF	35	28
INFANT PLAY YARD	1,885 SF	CLASS SIZE	56
LOBBY ASSEMBLY- UNCONCENTRATED	390 SF	15	26
MAINT. STOR	68 SF	300	1
MECH	382 SF	300	2
MTG - ASSEMBLY UNCONCENTRATED	399 SF	15	27
PRE-K DAYCARE	1,329 SF	35	38
PRE-K DAYCARE	1,035 SF	35	30
PRE-K PLAY YARD	4,304 SF	CLASS SIZE	68
RESEARCH	219 SF	20	11
RESEARCH	91 SF	20	5
RESEARCH	107 SF	20	6
RESEARCH	89 SF	20	5
RESEARCH	252 SF	20	13
RESEARCH	252 SF	20	13
SIDE YARD	625 SF	35	18
STAFF KITCHEN - ASSEMBLY-UNCONCENTRATED	555 SF	15	38
STORAGE	344 SF	300	2
STORAGE	131 SF	300	1
STORAGE	144 SF	300	1
STORAGE	125 SF	300	1
TODDLER DAYCARE	1,131 SF	35	33
TODDLER DAYCARE	893 SF	35	26
TODDLER PLAY YARD	4,120 SF	CLASS SIZE	59
WORKROOM ASSEMBLY-UNCONCENTRATED	296 SF	15	20
Grand total			600

LIFE SAFETY AND EXITING LEGEND

AREA NAME
150 SF — AREA
XX SF/OCC — OCCUPANT LOAD FACTOR
XX OCC — OCCUPANT COUNT

0 — ACCUMULATED LOAD AND TRAVEL DIRECTION
84 — ACCUMULATED LOAD
0 — OCCUPANT LOAD WITHIN INDIVIDUAL SPACE AND TRAVEL DISTANCE
START POINT OF TRAVEL
EXIT SIGN, SINGLE-SIDED
EXIT SIGN, DOUBLE-SIDED
FEC — FIRE EXTINGUISHER CABINET

X' - X" — COMMON PATH OF TRAVEL
X' - X" — EXIT PATH OF TRAVEL
EXTERIOR SITE PATH OF TRAVEL
FULL HEIGHT DOOR OR GATE
42" HIGH GATE

PATTERN — OCCUPANCY GROUP (NON-SEPARATED)
E - EDUCATIONAL
B - BUSINESS

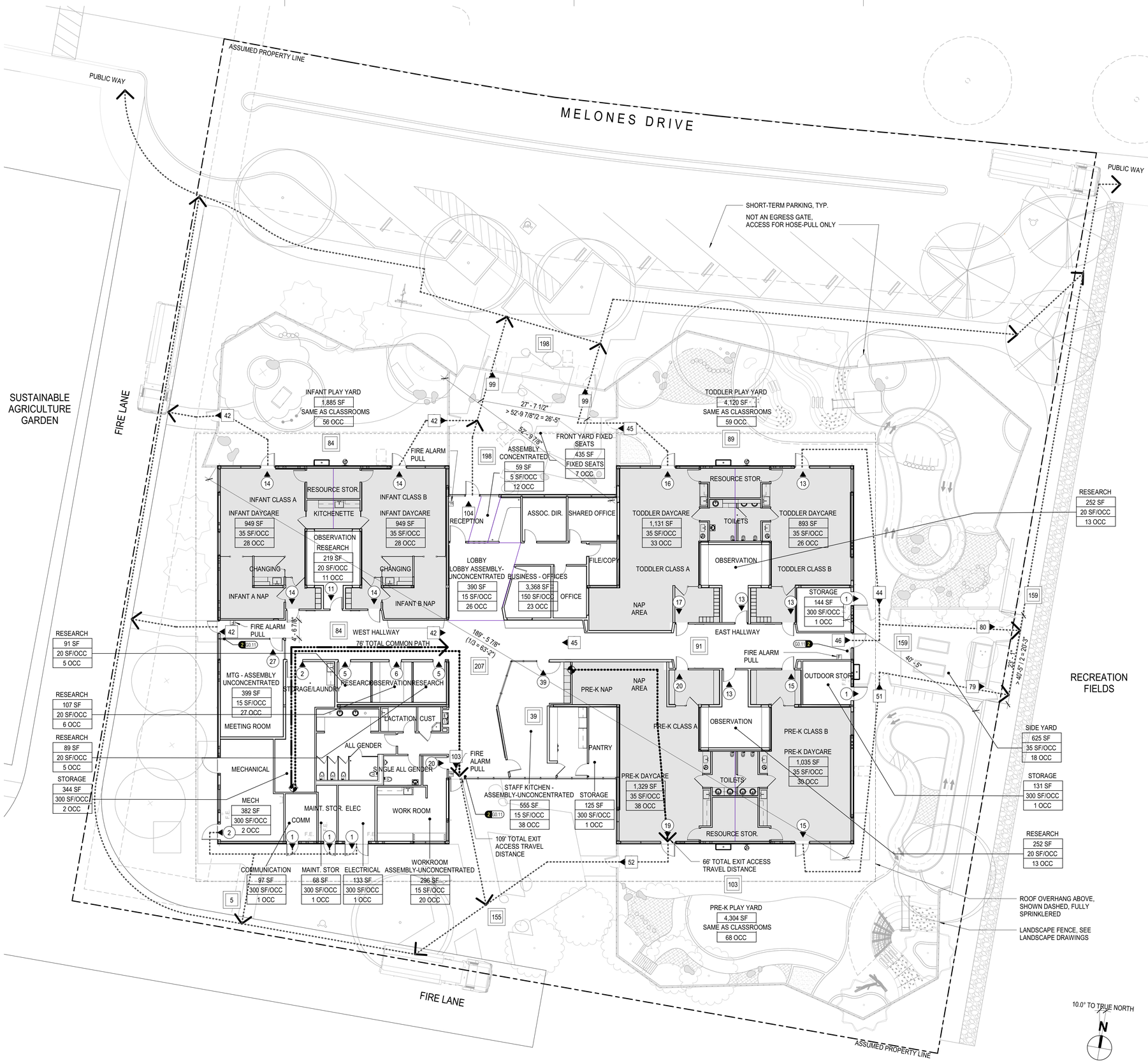

1 / G0.06 FIRE LIFE SAFETY PLAN - LEVEL 1
SCALE: 1" = 10'-0"

C:\Users\s.sanchez\Documents\20020-A-CSU STANISLAUS CDC- CENTRAL_ehdd-sjling.rvt

Division of the State Architect

APPROVED
DIV. OF THE STATE ARCHITECT
APP: 02-119316 INC:
REVIEWED FOR
SS☐ FLS☐ ACS☑
DATE: 03/24/2022

Office of the State Fire Marshal

OFFICE OF THE STATE FIRE MARSHAL APPROVED FIRE AND PANIC ONLY
03/14/22
21-0498
Approval of this plan does not authorize or approve any omission or deviation from applicable requirements. Final approval is subject to field inspection. One set of approved plans shall be available on the project site at all times.

CSUS CHILD DEVELOPMENT CENTER

CALIFORNIA STATE UNIVERSITY, STANISLAUS
ONE UNIVERSITY CIRCLE
TURLOCK, CA 95382

ehdd.
PIER 1, BAY 2
THE EMBARCADERO
SAN FRANCISCO, CA 94111
INFO@EHDD.COM
+1 415-285-9193

Consultant

Stamp

LICENSED ARCHITECT
JENNIFER K DEVLIN
No. C-27341
Ren. 5-31-23
STATE OF CALIFORNIA

Printing	Date
95% CONSTRUCTION DOCUMENTS	06.25.2021
PERMIT SET	08.16.2021
PERMIT SET - DSA V2	12.15.2021
PERMIT SET - SFM	12.21.2021

Revisions and Description	Date

Scale
As indicated

Drawn by
Author

EHDD Job Number
20020

Sheet Title
FIRE LIFE SAFETY PLAN

Sheet Number
G0.06 V3

12/13/2021 10:56:59 AM

PLUMBING CALCULATIONS

FACTORS AND CALCULATIONS									FIXTURE COUNT PER CPC TABLE 422.1							
TYPE OF OCCUPANCY (see CPC Table 422.1)	**TOTAL SQ. FT.** (net, this occupancy, this floor)	**OCCUPANT LOAD FACTOR: Occ's/sq. ft.** (see CPC Table A)	**NUMBER OF FIXED SEATS, GROUP A OCUPANCIES**	**OCCUPANT LOAD FACTOR: Occ's/seat** (see CPC Table A)	**TOTAL OCCUPANT LOAD** (this occupancy, this floor, rounded up)	**GENDER LOAD FACTOR** (half total occ. is women, half is men)	**NUMBER OF WOMEN** (1/2 total occ. Load, not rounded up)	**NUMBER OF MEN** (1/2 total occ. load; not rounded up)	**WOMEN'S WATER CLOSETS**	**MEN'S WATER CLOSETS**	**URINALS**	**WOMEN'S LAVS**	**MEN'S LAVS**	**DRINKING FOUNTAINS** (if any req'd: one high and one low, minimum.)	**SERVICE SINK OR LAUNDRY TRAY** (**only 1 total per building required)	**BATHTUBS OR SHOWERS**
B: Business occupancy, office or public buildings: Areas accessible to the public	2121	1/200	N/A	N/A	11											
B: Higher Education: Colleges, universities, adult centers	1012	1/50	N/A	N/A	21											
TOTAL GROUP B OCCUPANCY					32	0.5	16	16	1.07	0.32	0.16	0.32	0.21	0.21	**	N/A
Group E: Schools for day care, elementary, secondary	3908	1/50	N/A	N/A	79	0.5	39.5	39.5	1.32	0.79	0.40	0.99	0.99	0.53	**	N/A
Group F: Workshops, factories		0.0005 (or 1/2,000)	N/A	N/A	0	0.5	0	0	0.00	0.00	N/A	0.00	0.00	0.00	**	
TOTAL REQUIRED									**3**	**2**	**1**	**2**	**2**	**2**	**1**	**0**
TOTAL PROVIDED (All Gender)										**11**	**1**	**10**	**2**	**1**	**0**	

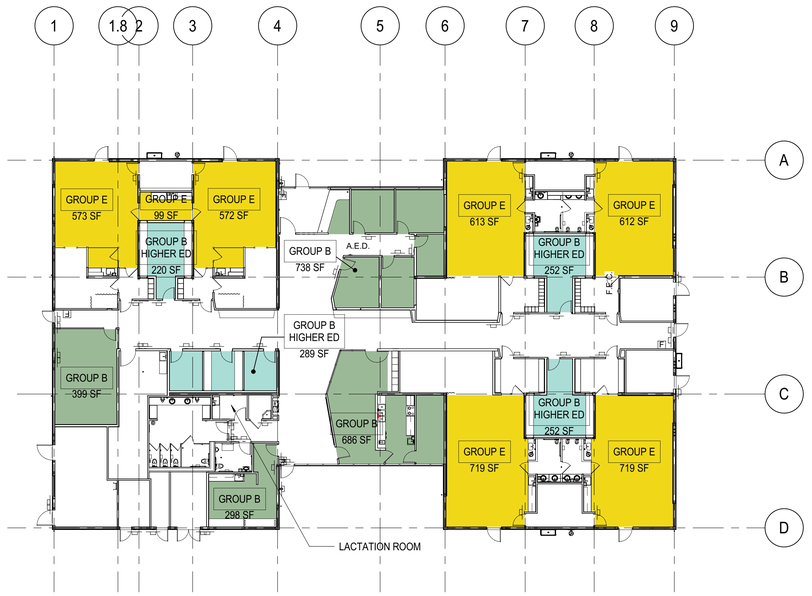

Plumbing Occupant Load Factor

- GROUP B
- GROUP B HIGHER ED
- GROUP E

Plumbing Calc Area Schedule

Level	Name	Area
LEVEL 1	GROUP B	2,121 SF
LEVEL 1	GROUP B HIGHER ED	1,012 SF
LEVEL 1	GROUP E	3,908 SF

10.0° TO TRUE NORTH

N

16' 8' 0' 16' 32'

1 G0.07 PLUMBING CALC - LEVEL 1

SCALE: 1/16" = 1'-0"

C:\Users\l.quinones\OneDrive - EHDD\Documents\20020-A-CSU STANISLAUS CDC- CENTRAL_l.quinones.rvt

Division of the State Architect

APPROVED
DIV. OF THE STATE ARCHITECT
APP: 02-119316 INC:
REVIEWED FOR
SS☐ FLS☐ ACS☑
DATE: 03/24/2022

Office of the State Fire Marshal

OFFICE OF THE STATE FIRE MARSHAL
APPROVED FIRE AND PANIC ONLY
03/14/22
21-0498
Approval of this plan does not authorize or approve any omission or deviation from applicable regulations. Final approval is subject to field inspection. One set of approved plans shall be available on the project site at all times.

CSUS CHILD DEVELOPMENT CENTER

CALIFORNIA STATE UNIVERSITY, STANISLAUS
ONE UNIVERSITY CIRCLE
TURLOCK, CA 95382

ehdd.

PIER 1, BAY 2
THE EMBARCADERO
SAN FRANCISCO, CA 94111

INFO@EHDD.COM
+1 415-285-9193

Consultant

Stamp

Printing	Date
95% CONSTRUCTION DOCUMENTS	06.25.2021
PERMIT SET	08.16.2021
PERMIT SET - DSA V2	12.15.2021
PERMIT SET - SFM	12.21.2021

Revisions and Description	Date

Scale
1/16" = 1'-0"

Drawn by
Author

EHDD Job Number
20020

Sheet Title
PLUMBING CALCULATIONS

Sheet Number
G0.07 V3

12/10/2021 9:42:05 AM

LOCKDOWN PROCESS

1. THE UNIVERSITY POLICE, THE STAFF AND TEACHERS OF THE CHILD DEVELOPMENT CENTER (CDC) ARE AUTHORIZED TO ISSUE A LOCKDOWN ORDER.

2. DURING NORMAL OPERATIONS, THERE ARE NO SECURITY MEASURES THAT COULD ADVERSELY AFFECT EGRESS OR FIRE DEPARTMENT OPERATIONS.

3. THE LOCKDOWN PLAN IS MEANT TO ADDRESS A POTENTIAL LIFE-SAFETY THREAT FROM THE EXTERIOR. IN THE EVENT OF SUCH A THREAT, CDC STAFF AND TEACHERS CAN ADMINISTER A LOCKDOWN AND ALL EXTERIOR DOORS OF THE BUILDING WILL BECOME LOCKED.

4.1 ALL CLASSROOMS, OBSERVATION ROOMS, OFFICES, MEETING ROOM, AND WORK ROOM WILL BE EQUIPPED WITH A PHONE FOR COMMUNICATION DURING A LOCK DOWN. THE PHONE SYSTEM CAN BE PROGRAMMED TO MAKE AN ALL-CALL ANNOUNCEMENT THAT CAN BE SENT FROM DESIGNATED HANDSETS TO ALL PHONES WITHIN THE CDC VIA THE PHONE'S INTERCOM SPEAKER.

4.2 DURING A LOCKDOWN, THE EXTERIOR DOORS WILL BECOME LOCKED. THE INTERIOR DOORS ARE UNAFFECTED AND WILL REMAIN WITH THE SAME OPERATIONAL MANNER AS USUAL.

4.3 THE EXTERIOR DOORS WILL BE LOCKED BY DESIGNATED KEY STAFF AND ABLE TO USE THEIR CARD AT DESIGNATED CARD READERS SHOWN ON SHEET E3.2, PLAN NOTE #5.

4.4 DURING A LOCKDOWN, THE EXTERIOR DOORS CAN STILL BE OPENED FOR EGRESS IN THE SAME OPERATION MANNER AS USUAL. THE INTERIOR DOORS ARE UNAFFECTED AND WILL REMAIN WITH THE SAME OPERATIONAL MANNER AS USUAL.

5. DURING A LOCKDOWN, THE CAMPUS POLICE WILL BE NOTIFIED IF THE LOCKDOWN WAS INITIATED BY THE CDC RATHER THAN BY THE UNIVERSITY, AND THE CAMPUS POLICE WILL NOTIFY THE LOCAL FIRE DEPARTMENT.

6. DURING A LOCKDOWN, CDC TEACHERS AND STAFF WILL COMMUNICATE VIA PHONES IN THEIR ROOMS TO ASSESS AND ACCOUNT FOR ALL OCCUPANTS.

7. DURING A LOCKDOWN, PHONES LISTED IN SECTION 4.1 WILL BE USED TO COMMUNICATE INTERNALLY WITHIN THE BUILDING AND TO THE DIRECTOR'S OFFICE WHICH WILL FUNCTION AS THE CENTRAL LOCATION OF THE BUILDING.

8. TERMINATION OF A LOCKDOWN WILL SIMILARLY BE COMMUNICATED VIA THE PHONE SYSTEM IN EACH ROOM.

9. THE UNIVERSITY POLICE, THE STAFF AND TEACHERS OF THE CHILD DEVELOPMENT CENTER ARE AUTHORIZED TO TERMINATE A LOCKDOWN ORDER.

10. UPON TERMINATION OF A LOCKDWON, THE STAFF AND TEACHERS OF THE CHILD DEVELOPMENT CENTER WILL TEST ALL EXTERIOR DOORS FOR NORMAL OPERATIONS AND WILL NOTIFY UNIVERSITY POLICE AND LOCKSMITH IN THE EVENT OF A MALFUNCTION.

11. THE CHILD DEVELOPMENT CENTER WILL DEVELOP A TRAINING AND PRACTICE DRILL PROCESS WITH THE UNIVERSITY POLICE. FREQUENCY OF TRAINING AND PRACTICE DRILLS ARE ANTICIPATED TO BE ONCE ANNUALLY, AND WILL NOT BE SUBSTITUTED FOR FIRE AND EVACUATION DRILLS.

Division of the State Architect

APPROVED
DIV. OF THE STATE ARCHITECT
APP: 02-119316 INC:
REVIEWED FOR
SS☐ FLS☐ ACS☑
DATE: 03/24/2022

Office of the State Fire Marshal

OFFICE OF THE STATE FIRE MARSHAL
APPROVED FIRE AND PANIC ONLY
03/14/22
21-0498
Approval of this plan does not authorize or approve any omission or deviation from applicable regulations. Final approval is subject to field inspection. One set of approved plans shall be available on the project site at all times.

CSUS CHILD DEVELOPMENT CENTER

CALIFORNIA STATE
UNIVERSITY, STANISLAUS
ONE UNIVERSITY CIRCLE
TURLOCK, CA 95382

ehdd.

PIER 1, BAY 2
THE EMBARCADERO
SAN FRANCISCO, CA 94111

INFO@EHDD.COM
+1 415-285-9193

Consultant

Stamp

LICENSED ARCHITECT
JENNIFER K. DEVLIN
No. 17834
Ren. 5-31-23
STATE OF CALIFORNIA

Printing	Date
95% CONSTRUCTION DOCUMENTS	06.25.2021
PERMIT SET	08.16.2021
PERMIT SET - DSA V2	12.15.2021
PERMIT SET - SFM	12.21.2021

Revisions and Description	Date

Scale

Drawn by
Author

EHDD Job Number
20020

Sheet Title
LOCKDOWN PROCESS

Sheet Number
G0.08 V3

C:\Users\l.quinones\OneDrive - EHDD\Documents\20020-A-CSU STANISLAUS CDC- CENTRAL_l.quinones.rvt

12/10/2021 9:42:05 AM

C:\Users\l.quinones\OneDrive - EHDD\Documents\20020-A-CSU STANISLAUS CDC- CENTRAL_l.quinones.rvt

4 G0.11 TYPICAL SIGNAGE AT BUILDING ACCESSIBLE ENTRY

3"=1'-0"

APPLICABLE CODE: CBC 11B-216.6; 11B-703.7.2.1

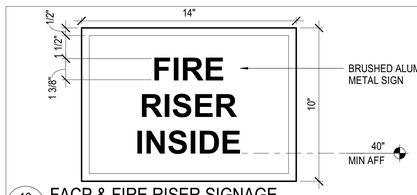

10 G0.11 FACP & FIRE RISER SIGNAGE

3"=1'-0"

APPLICABLE CODE: CFC 509.1; CBC 914.2; 11B-216.3; 11B-703.5

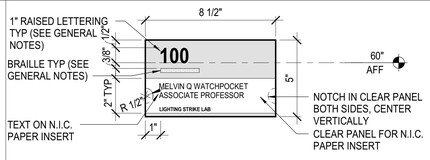

3 G0.11 ROOM NUMBER/NAME SIGNAGE

3"=1'-0"

APPLICABLE CODE: CBC 11B-216.3, 11B-703.1-5

9 G0.11 FACP & FIRE RISER SIGNAGE

3"=1'-0"

APPLICABLE CODE: CFC 509.1; CBC 914.2; 11B-216.3; 11B-703.5

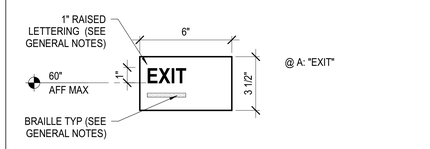

2 G0.11 MEANS OF EGRESS SIGNAGE

3"=1'-0"

APPLICABLE CODE: CBC 1013.4; 11B-703.1-3, 703.5

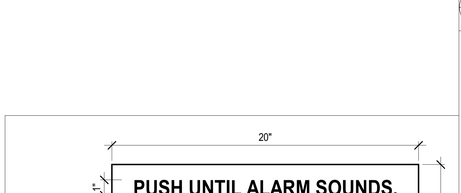

15 G0.11 DELAYED EGRESS DOOR SIGN

3"=1'-0"

APPLICABLE CODE: CBC 1010.1.9.8.1-6, 11B-703.2, 11B-703.3, 11B-703.5

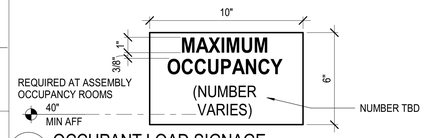

8 G0.11 OCCUPANT LOAD SIGNAGE

3"=1'-0"

APPLICABLE CODE: CBC 1004.3 11B-216.3; 11B-703.5

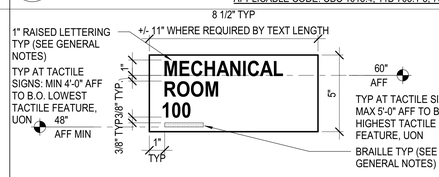

1 G0.11 BACK OF HOUSE ROOM NUMBER/NAME SIGNAGE

3"=1'-0"

APPLICABLE CODE: CBC 914.2, 11B-216.2, 11B-703.1-5

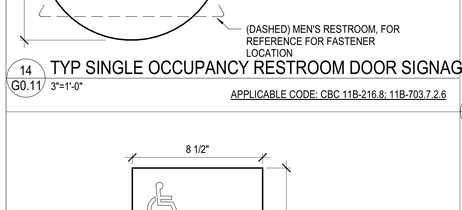

14 G0.11 TYP SINGLE OCCUPANCY RESTROOM DOOR SIGNAGE

3"=1'-0"

APPLICABLE CODE: CBC 11B-216.8; 11B-703.7.2.6

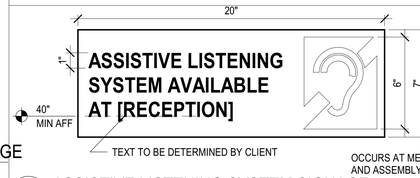

7 G0.11 ASSISTIVE LISTENING SYSTEM SIGNAGE

3"=1'-0"

APPLICABLE CODE: CBC 11B-216.10; 11B-703.5; 11B-703.7.2.4

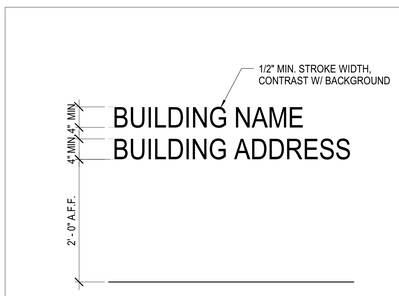

17 G0.11 (G0.11) PREMISE IDENTIFICATION

SCALE: 1" = 1'-0"

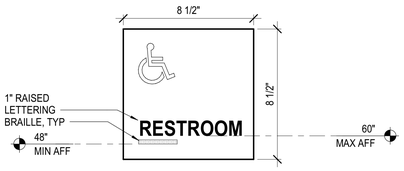

13 G0.11 TYP RESTROOM WALL SIGNAGE

3"=1'-0"

APPLICABLE CODE: CBC 11B-216.8; 11B-703.1-5; 11B-703.7.2.1

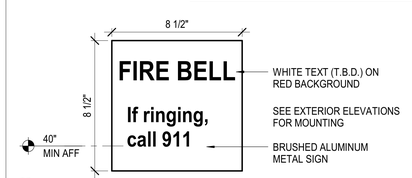

6 G0.11 FIRE BELL EXTERIOR SIGN

3"=1'-0"

APPLICABLE CODE: CBC 11B-216.3; 11B-703.5

GENERAL NOTES

1. SIGNAGE TO BE PROVIDED AT ALL LOCATIONS REQUIRED BY CODE, AND SHALL BE ACCESSIBLE AS REQUIRED BY 2019 CBC 11B-216 AND 11B-703.
2. CBC, 11B.703.5.1. FINISH AND CONTRAST. CHARACTERS, SYMBOLS AND THEIR BACKGROUND SHALL HAVE A NONGLARE FINISH. CHARACTERS AND SYMBOLS SHALL CONTRAST WITH THEIR BACKGROUND, EITHER LIGHT ON A DARK BACKGROUND OR DARK ON A LIGHT BACKGROUND
3. CBC 11B-703.2 RAISED CHARACTERS: 1/32" RAISED LETTERING AND GRAPHICS, WHERE NOTED. LETTERING TO BE SANS SERIF FONT (SEE SPECIFICATIONS) AND UPPERCASE WITH A HEIGHT MINIMUM OF 5/8" AND MAXIMUM 2", UON. CHARACTER PROPORTIONS: WIDTH OF THE LETTER "O" IS 60% MINIMUM AND 110% MAXIMUM OF THE HEIGHT OF THE LETTER "I". STROKE THICKNESS OF THE LETTER "I" SHALL BE 15% MAXIMUM OF THE HEIGHT OF THE CHARACTER. LINE SPACING: SPACING BETWEEN THE BASELINES OF SEPARATE LINES OF RAISED CHARACTERS WITHIN A MESSAGE SHALL BE 135 PERCENT MINIMUM AND 170 PERCENT MAXIMUM OF THE RAISED CHARACTER HEIGHT.
4. CBC 11B-703.3 BRAILLE: RAISED CHARACTERS SHALL BE DUPLICATED IN BRAILLE. BRAILLE TO BE CONTRACTED (GRADE 2), INTEGRAL WITH SIGN, LOCATE BELOW THE CORRESPONDING TEXT. FLUSH LEFT OR CENTERED. IF TEXT IS MULTILINED BRAILLE SHALL BE PLACED BELOW THE ENTIRE TEXT. BRAILLE SHALL BE SEPARATED 3/8" MINIMUM AND 1/2" MAXIMUM FROM ANY OTHER TACTILE CHARACTERS AND 3/8" MINIMUM FROM RAISED BORDERS AND DECORATIVE ELEMENTS. (EXCEPTION: ELEVATOR CONTROLS PER 11B-703.3.2.
5. SIGNS TO RECEIVE VINYL FOAM TAPE FOR TEMPORARY PLACEMENT, AND SILICONE ADHESIVE SPREAD OVER FULL CONTACT AREA FOR FINAL PLACEMENT, UON.
6. FOR TYPICAL MOUNTING HEIGHTS NOT NOTED ON THIS SHEET, SEE G0.12. MOUNTING HEIGHTS TO COMPLY WITH 2019 CBC.
7. SIGNS SHALL BE FIELD-INSPECTED PER CBC 11B-703.1.1.2.

Division of the State Architect

APPROVED
DIV. OF THE STATE ARCHITECT
APP: 02-119316 INC:
REVIEWED FOR
SS☐ FLS☐ ACS☑
DATE: 03/24/2022

Office of the State Fire Marshal

OFFICE OF THE STATE FIRE MARSHAL
APPROVED FIRE AND PANIC ONLY
03/14/22
21-0498
Approval of this plan does not authorize or approve any omission or deviation from applicable regulations. Final approval is subject to field inspection. One set of approved plans shall be available on the project site at all times.

CSUS CHILD DEVELOPMENT CENTER

CALIFORNIA STATE UNIVERSITY, STANISLAUS
ONE UNIVERSITY CIRCLE
TURLOCK, CA 95382

ehdd.

PIER 1, BAY 2
THE EMBARCADERO
SAN FRANCISCO, CA 94111

INFO@EHDD.COM
+1 415-285-9193

Consultant

Stamp

LICENSED ARCHITECT
JENNIFER K. DEVLIN
No. C-27841
Ren. 5-31-23
STATE OF CALIFORNIA

Printing	Date
95% CONSTRUCTION DOCUMENTS	06.25.2021
PERMIT SET	08.16.2021
PERMIT SET - DSA V2	12.15.2021
PERMIT SET - SFM	12.21.2021

Revisions and Description	Date

Scale
As indicated

Drawn by
Author

EHDD Job Number
20020

Sheet Title
CODE SIGNAGE

Sheet Number
G0.11 V3

12/10/2021 9:42:05 AM

ACCESSORIES

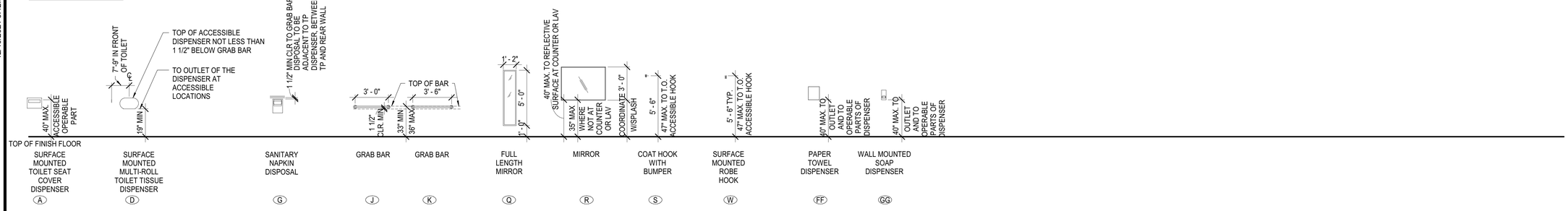

ACCESSIBLE PLUMBING FIXTURES

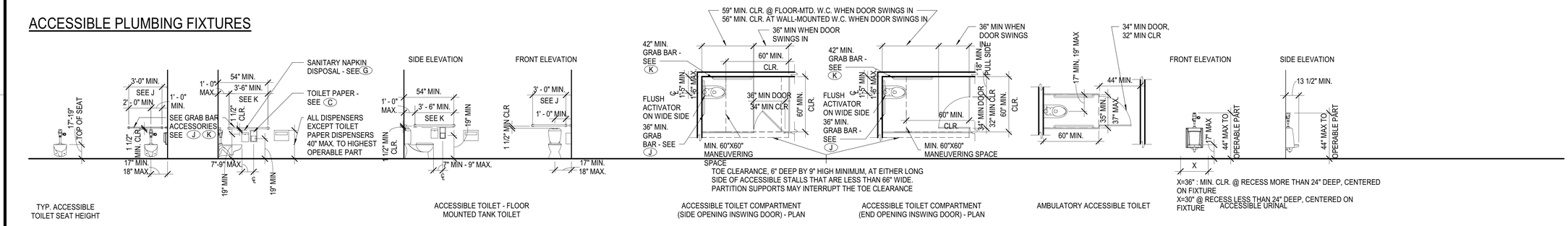

TYP. ACCESSIBLE TOILET SEAT HEIGHT

ACCESSIBLE TOILET - FLOOR MOUNTED TANK TOILET

ACCESSIBLE TOILET COMPARTMENT (SIDE OPENING INSWING DOOR) - PLAN

ACCESSIBLE TOILET COMPARTMENT (END OPENING INSWING DOOR) - PLAN

AMBULATORY ACCESSIBLE TOILET

X=36" : MIN. CLR. @ RECESS MORE THAN 24" DEEP, CENTERED ON FIXTURE
X=30" @ RECESS LESS THAN 24" DEEP, CENTERED ON FIXTURE

ACCESSIBLE URINAL

ACCESSIBLE PLUMBING FIXTURES

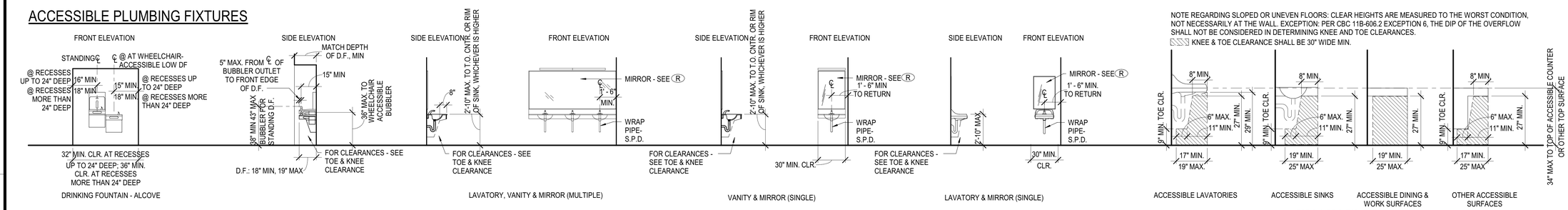

DRINKING FOUNTAIN - ALCOVE

LAVATORY, VANITY & MIRROR (MULTIPLE)

VANITY & MIRROR (SINGLE)

LAVATORY & MIRROR (SINGLE)

ACCESSIBLE LAVATORIES

ACCESSIBLE SINKS

ACCESSIBLE DINING & WORK SURFACES

OTHER ACCESSIBLE SURFACES

CHILDREN'S ACCESSIBLE ACCESSORIES & PLUMBING FIXTURES

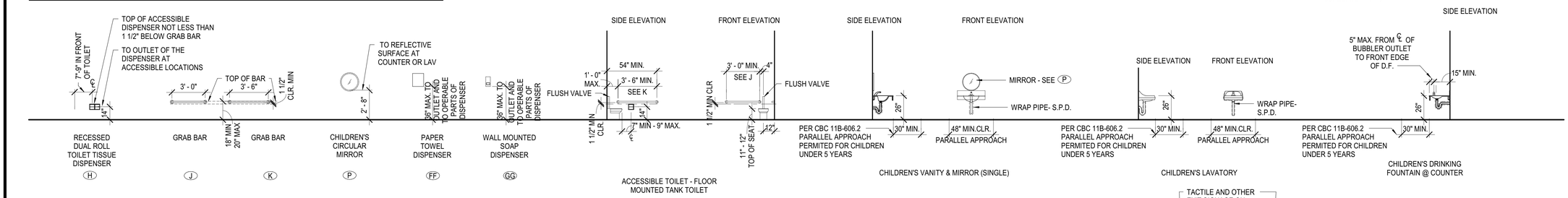

TYPICAL INTERIOR SIGNAGE AND FIXTURES

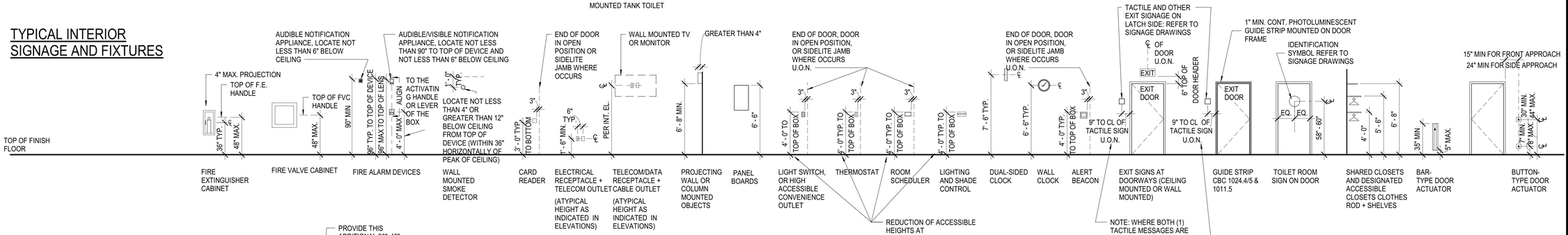

REQUIRED LEVEL MANEUVERING CLEARANCE AT DOORS

CLEAR MANEUVERING SPACE

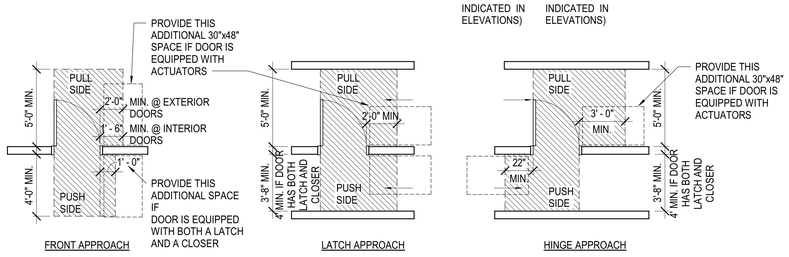

C:\Users\l.quinones\OneDrive - EHDD\Documents\20020-A-CSU STANISLAUS CDC- CENTRAL_l.quinones.rvt

Division of the State Architect

APPROVED
DIV. OF THE STATE ARCHITECT
APP: 02-119316 INC:
REVIEWED FOR
SS☐ FLS☐ ACS☑
DATE: 03/24/2022

Office of the State Fire Marshal

OFFICE OF THE STATE FIRE MARSHAL
APPROVED FIRE AND PANIC ONLY
03/14/22
21-0498
Approval of this plan does not authorize or approve any omission or deviation from applicable requirements. Final approval is subject to field inspection. One set of approved plans shall be available on the project site at all times.

CSUS CHILD DEVELOPMENT CENTER

CALIFORNIA STATE UNIVERSITY, STANISLAUS
ONE UNIVERSITY CIRCLE
TURLOCK, CA 95382

ehdd.

PIER 1, BAY 2
THE EMBARCADERO
SAN FRANCISCO, CA 94111

INFO@EHDD.COM
+1 415-285-9193

Consultant

Stamp

LICENSED ARCHITECT
JENNIFER K DEVLIN
No. C-27344
Ren. 5-31-23
STATE OF CALIFORNIA

Printing	Date
95% CONSTRUCTION DOCUMENTS	06.25.2021
PERMIT SET	08.16.2021
PERMIT SET - DSA V2	12.15.2021
PERMIT SET - SFM	12.21.2021

Revisions and Description	Date

Scale
1/4" = 1'-0"

Drawn by
Author

EHDD Job Number
20020

Sheet Title
ACCESSIBLE MOUNTING HEIGHTS

Sheet Number
G0.12 V3

PERMIT SET REVISION 2 FOR

CSUS CHILD DEVELOPMENT CENTER

TURLOCK, CALIFORNIA

LEGEND

	EXISTING	PROPOSED
BOUNDARY LINE		
CENTERLINE		
RIGHT-OF-WAY		
PARCEL LINE		
MONUMENT		
SAWCUT	N/A	
CURB, GUTTER AND SIDEWALK		
EDGE OF PAVEMENT		
CONCRETE VALLEY GUTTER		
TRENCH DRAIN		
STORM DRAIN (MAIN)	SD 6X12"SD	12"SD
FORCE MAIN	SD 6X8"FM	48"FM
DRAINAGE SWALE		
STORM DRAIN MAINTENANCE HOLE	SD	SD
CURB INLET		
DRAIN INLET		
DRAIN INLET ON MAINTENANCE HOLE		
STORM DRAINAGE FILTER	N/A	
WATER (MAIN)	6"W	8"W
WATER (SERVICE)	1.5"W	8"W
WATER VALVE	WV	WV
WATER BLOW OFF VALVE	BO	BO
BACK FLOW PREVENTER	BFP	BFP
DOUBLE CHECK DETECTOR ASSEMBLY	DCDA	DCDA
POST INDICATOR VALVE (SINGLE)	PIV	PIV
FIRE DEPARTMENT CONNECTION		
FIRE HYDRANT		
WATER METER	WM 3/4"M	WM
SERVICE STUB		
CLEANOUT		
SEWER MAINTENANCE HOLE	SD	SD
GREASE TRAP		
SEWER (MAIN)	SS 6X12"SS	12"SS
JOINT TRENCH (APPROX LOCATION)	JT	N/A
TRANSFORMER (APPROX LOCATION)		
OVER HEAD ELECTRICAL	OHE	N/A
SERVICE POLE	SP	N/A
JOINT POLE	JP	N/A
JOINT POLE WITH LIGHT	JP	N/A
POWER POLE	PP	N/A
TELEPHONE POLE	TP	N/A
GUY		N/A
ELECTRICAL MANHOLE		N/A
ELECTROLIER		100W 150W 200W
UTILITY BOX		N/A
GAS LINE	G	N/A
GAS VALVE	GV	N/A
PAD ELEVATION	N/A	N/A
FINISH FLOOR ELEVATION (PROPOSED)	N/A	FF=100.00
BUILDING PAD	N/A	10.0
TOP OF CURB ELEVATION	8.66 TC	8.66 TC
ORIGINAL GROUND	8.66 EG	N/A
DIRECTION OF FLOW	6.1%	6.1%
CONTOURS	32	32
WALL (SEE LABEL FOR TYPE)		
FENCE (CHAINLINK OR VINYL)		
FENCE (WIRE OR HOGWIRE)		
FENCE (WOOD OR WROUGHT IRON)		
FENCE (SPLIT RAIL)		
TREE OR SHRUB		N/A
TREE STUMP		N/A
IRRIGATION LINE	4"IRR	8"IRR
IRRIGATION VALVE	ICV	ICV
IRRIGATION PRESSURE MANHOLE/VENT		
SIGN		
KEYNOTE SYMBOL	1	X

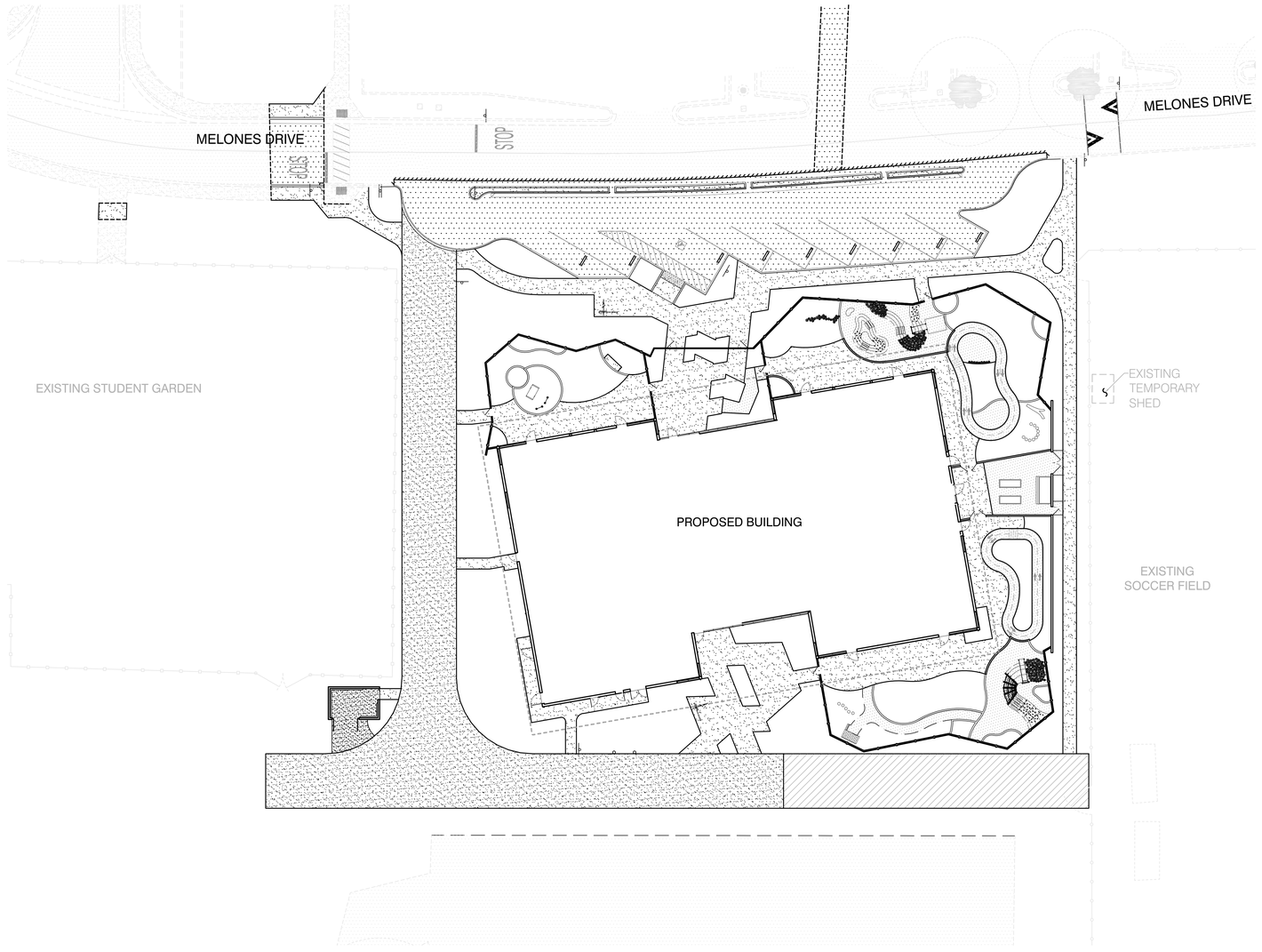

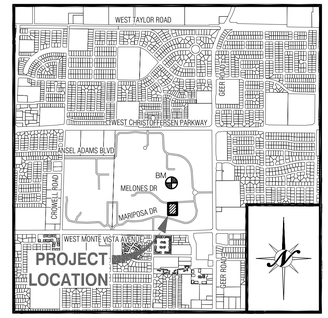

VICINITY MAP

NTS

20 10 0 20

1" = 20'

ABBREVIATIONS

±	PLUS OR MINUS (NOT EXACT)	DIA	DIAMETER	MH	MAINTENANCE HOLE	RD	ROAD
@	AT	DIP	DUCTILE IRON PIPE	MIN	MINIMUM	RET	RETURN
AB	AGGREGATE BASE	(DOM)	DOMESTIC	M.I.D	MODESTO IRRIGATION DISTRICT	RV	RESISTANCE VALVE
AC	ASPHALT CONCRETE	DR	DRIVE	N	NORTH	RP	REDUCED PRESSURE
ACC	ACCESSIBLE	DW	DRIVEWAY	NDS	NDS INC. (MANUFACTURER)	BP	BACKFLOW PREVENTER
ADTT	AVERAGE DAILY TRUCK TRAFFIC	E	EAST	NFPA	NATIONAL FIRE PROTECTION ASSOCIATION	S	SLOPE OR SOUTH
AG	ATRIUM GRATE	EC	END OF CURVE			SC	STANISLAUS COUNTY
ALT	ALTERNATE	ELC	ELECTROLIER	NIC	NOT INCLUDED	SD	STORM DRAIN
APN	ASSESSORS PARCEL NUMBER	ELEV	ELEVATION	NSE	NORTHSTAR ENGINEERING	SG	SUB-GRADE
ASR	AUTOMATIC SPRINKLER RISER	EP	EDGE OF PAVEMENT	NTS	NOT TO SCALE	SHT	SHEET
AVE	AVENUE	ER	END OF RETURN	OC	ON CENTER	SIM	SIMILAR
BC	BEGIN CURVE	ESMT OR EASE	EASEMENT	OF	OFFSET	SNS	STREET NAME SIGN
BDRY	BOUNDARY	EX OR EXIST	EXISTING	OG	ORIGINAL GROUND / GRADE	ST	STREET
BFP	BACK FLOW PREVENTOR	FDC	FIRE DEPARTMENT CONNECTION	OHE	OVER HEAD ELECTRIC	STL	STEEL
BK	BOOK	FES	FLARED END SECTION	OSFM	OFFICE OF THE STATE FIRE MARSHALL	STA	STATION
BM	BENCH MARK	FF	FINISH FLOOR			STD	STANDARD
BW	BACK OF WALK	FG	FINISH GRADE	P OR PAV	PAVEMENT	S/W OR SW	SIDEWALK
BSL	BUILDING SETBACK LINE	FH	FIRE HYDRANT	PCC	POINT OF COMPOUND CURVE OR PORTLAND CEMENT CONCRETE	SS	SANITARY SEWER
BVC	BEGIN VERTICAL CURVE	FL	FLOW LINE			TC	TOP OF CURB
C&G OR C.G.	CURB AND GUTTER	FM	FORCE MAIN	PDSF	PEAK DIVERSION STORMFILTER	TD	TRENCH DRAIN
CB	CATCH BASIN	FS	FIRE SERVICE	PG	PAGE	TDC	TOP OF DRIVE OVER CURB
CDS	CONTINUOUS DEFLECTION SEPARATORS	FSR	FIRE SPRINKLER RISER	PG&E	PACIFIC GAS AND ELECTRIC	TEMP	TEMPORARY
		GB	GRADE BREAK	PIV	PRESSURE INDICATOR VALVE	TG	TOP OF GRATE
CFC	CALIFORNIA FIRE CODE	GR	GRATE, GRADE, OR GROUND	PL	PROPERTY LINE	THRU	THROUGH
CIP	CAST IRON PIPE	GS	GROUND SHOT ELEVATION	PM	PARCEL MAP	TI	TRAFFIC INDEX
℄ OR CL	CENTER LINE	GS@W	GROUND SHOT AT WALL	POC	POINT OF CONNECTION	TW	TOP OF WALL
CMP	CORRUGATED METAL PIPE	GV	GATE VALVE	PP	POWER POLE	TPE	TREE PLANTING EASEMENT
CO	CLEAN OUT	HORIZ	HORIZONTAL	PRC	POINT OF REVERSE CURVATURE	TVC	TOP OF VERTICAL CURB
COT OR C.O.T.	CITY OF TURLOCK	HP	HIGH POINT	PROF	PROFILE	TYP	TYPICAL
COMP.	COMPACTION	HT	HEIGHT	PT	POINT	UON	UNLESS OTHERWISE NOTED
CONC OR CC	CONCRETE	HWY	HIGHWAY	PTDF	PRESSURE TREATED DOUGLAS FIR	VERT	VERTICAL
CR	CURB RETURN	ID	INSIDE DIAMETER	PUE	PUBLIC UTILITY EASEMENT	VCP	VITRIFIED CLAY PIPE
CSUS	CALIFORNIA STATE UNIVERSITY STANISLAUS	INV	INVERT	PVC	POLYVINYL CHLORIDE PIPE	W	WATER OR WEST
		IRR	IRRIGATION	RW	RECLAIMED WATER	WM	WATER METER
CT.	COURT	LF	LINEAL FEET OR LINEAR FEET	R/W	RIGHT-OF-WAY	WS	WATER SERVICE
CV	CHECK VALVE	LN	LANE	R	RADIUS	WY	WAY
DDCV	DOUBLE DETECTOR CHECK VALVE	LP	LOW POINT	RC	RELATIVE COMPACTION	W/	WITH
DI	DRAIN INLET	JT	JOINT TRENC	RCP	REINFORCED CONCRETE PIPE	WWF	WELDED WIRE FABRIC
		MAX	MAXIMUM	R.D.	RELATIVE DENSITY		

PREPARED FOR

CLIENT:
ehdd
PIER 1 THE EMBARCADERO, BAY 2
SAN FRANCISCO, CA 94111
T: (415) 214-7226

PROJECT LOCATION

SITE ADDRESS
CALIFORNIA STATE UNIVERSITY STANISLAUS
ONE UNIVERSITY CIRCLE
TURLOCK, CA 95382

BENCHMARK

ELEVATION: 104.95' (NAD27)

BM: CALIFORNIA STATE UNIVERSITY, STANISLAUS MONUMENT NO. 1, BRASS DISC IN WELL.

SHEET INDEX

GENERAL INFORMATION

1.	C1.1	COVER SHEET
2.	C1.2	GENERAL NOTES AND SPECIFICATIONS
3.	C1.3	DETAILS AND CROSS SECTIONS
4.	C1.4	DETAILS AND CROSS SECTIONS
5.	C1.5	DETAILS AND CROSS SECTIONS
6.	C1.6	DETAILS AND CROSS SECTIONS
7.	C1.7	PAVEMENT DELINEATION PLAN

PERMIT SET DOCUMENTS

8.	C2.1	TOPOGRAPHIC AND DEMOLITION PLAN
9.	C2.2	TOPOGRAPHIC AND DEMOLITION PLAN
10.	C2.3	TOPOGRAPHIC AND DEMOLITION PLAN
11.	C3.1	DIMENSION AND PAVING PLAN
12.	C3.2	DIMENSION AND PAVING PLAN
13.	C3.3	DIMENSION AND PAVING PLAN
14.	C4.1	GRADING AND DRAINAGE PLAN
15.	C5.1	STORM DRAINAGE PLAN
16.	C6.1	SANITARY SEWER PLAN
17.	C7.1	COMPOSITE UTILITY PLAN
18.	C7.2	COMPOSITE UTILITY PLAN
19.	C7.3	COMPOSITE UTILITY PLAN
20.	C8.1	EROSION CONTROL PLAN, NOTES AND DETAILS

CALL BEFORE YOU DIG 811 800-227-2600

Division of the State Archi

APPROVED
DIV. OF THE STATE ARCHITECT
APP: 02-119316 INC:
REVIEWED FOR
SS☐ FLS☐ ACS☑
DATE: 03/24/2022

Office of the State Fire Marshal

OFFICE OF THE STATE FIRE MARSHAL
APPROVED FIRE AND PANIC ONLY
03/14/22
21-0498
Approval of this plan does not authorize or approve any omission or deviation from applicable requirements. Final approval is subject to field inspection. One set of approved plans shall be available on the project site at all times.

CSUS CHILD DEVELOPMENT CENTER

CALIFORNIA STATE
UNIVERSITY, STANISLAUS
ONE UNIVERSITY CIRCLE
TURLOCK, CA 95382

ehdd

PIER 1, BAY 2
THE EMBARCADERO
SAN FRANCISCO, CA 94111

INFO@EHDD.COM
+1 415-285-9193

Consultant

NorthStar Engineering Group, Inc.
* CIVIL ENGINEERING * SURVEYING * PLANNING *
620 12th Street Modesto, CA 95354
(209) 524-3525 Phone (209) 524-3526 Fax

Stamp

REGISTERED PROFESSIONAL ENGINEER
CASEY R. MAYNES
No. C89547
12/31/2022
CIVIL
STATE OF CALIFORNIA

Printing	Date
95% CONSTRUCTION DOCUMENTS	06.25.2021
PERMIT SET	08.16.2021
PERMIT SET - DSA V2	12.15.2021
PERMIT SET - SFM	12.21.2021

Revisions and Description	Date

Scale
As Shown

Drawn by
BEC

EHDD Job Number
20020

Sheet Title
COVER SHEET

Sheet Number
C1.1 **V3**

COPYRIGHT 2021 NORTHSTAR ENGINEERING GROUP, INC

PLOTTED: 12/6/2021 16:05 PLOTTED BY: Cwelker
DWG NAME: T:\20-21\20 CSUS Child Development - Cure\Civil\CD Plans\C1.1 - Cover.dwg

GENERAL NOTES

1. CONTRACTOR SHALL BE AWARE THAT THE FOLLOWING NOTES LISTED BELOW ARE NORTHSTAR ENGINEERING GROUP'S TYPICAL GENERAL NOTES AND SOME NOTES MAY NOT BE APPLICABLE TO THIS PLAN SET.
2. ALL IMPROVEMENTS SHALL BE CONSTRUCTED IN STRICT ACCORDANCE WITH THE FOLLOWING: CALIFORNIA STATE UNIVERSITY STANISLAUS ("UNIVERSITY") AND THE LATEST EDITION OF THE CALIFORNIA BUILDING CODE. WHERE THERE IS A CONFLICT BETWEEN THE PLANS AND THE UNIVERSITY AND/OR CALIFORNIA BUILDING CODE STANDARDS, THE UNIVERSITY AND/OR CALIFORNIA BUILDING CODE STANDARDS SHALL PREVAIL. ALL WORK SHALL BE SUBJECT TO THE INSPECTION OF CALIFORNIA STATE UNIVERSITY STANISLAUS.
3. PRIOR TO ANY WORK BEING PERFORMED, THE CONTRACTOR SHALL CONTACT THE APPROPRIATE REGULATORY AGENCIES FOR A PRE-CONSTRUCTION CONFERENCE. CONTRACTOR SHALL ALSO NOTIFY THE PROJECT CONTACTS LISTED ON THIS SHEET FORTY-EIGHT (48) HOURS IN ADVANCE OF SAID MEETING.
4. IT IS INTENDED THAT THESE PLANS AND SPECIFICATIONS REQUIRE ALL LABOR AND MATERIALS NECESSARY AND PROPER FOR THE WORK CONTEMPLATED AND THAT THE WORK BE COMPLETED IN ACCORDANCE WITH THEIR TRUE INTENT AND PURPOSE. THE CONTRACTOR SHALL NOTIFY NORTHSTAR ENGINEERING GROUP, INC. ("ENGINEER") IMMEDIATELY REGARDING ANY DISCREPANCIES AND AMBIGUITIES WHICH MAY EXIST IN THE PLANS AND SPECIFICATIONS. IF THE PLANS OR SPECIFICATIONS DESCRIBE PORTIONS OF THE WORK IN GENERAL TERMS BUT NOT IN COMPLETE DETAIL, IT IS UNDERSTOOD THAT ONLY THE BEST GENERAL PRACTICE IS TO PREVAIL AND THAT ONLY MATERIALS AND WORKMANSHIP OF THE FIRST QUALITY ARE TO BE USED.
5. IF NORTHSTAR ENGINEERING GROUP, INC. IS TO PERFORM ANY SURVEY STAKING, THEN CONSTRUCTION STAKING FOR GRADING, CURB, GUTTER, SIDEWALK, SANITARY SEWER, STORM DRAIN, AND WATER SHALL BE DONE UNDER THE DIRECTION OF THE ENGINEER. THE CONTRACTOR SHALL NOTIFY THE ENGINEER SEVENTY-TWO (72) HOURS IN ADVANCE OF THIS NEED FOR STAKING. ANY STAKING REQUESTED BY THE CONTRACTOR OR HIS SUBCONTRACTORS THAT IS ABOVE AND BEYOND NORMAL STANDARD STAKING NEEDS AS OUTLINED IN THE CONTRACT, WILL BE SUBJECT TO AN EXTRA BACK CHARGE TO THE CONTRACTOR.
6. THE CONTRACTOR SHALL EXERCISE DUE CAUTION AND SHALL CAREFULLY PRESERVE BENCH MARKS, REFERENCE POINTS AND ALL SURVEY STAKES, AND SHALL BEAR ALL EXPENSE FOR REPLACEMENT AND/OR ERRORS CAUSED BY THEIR UNNECESSARY LOSS OR DISTURBANCE.
7. CONTRACTOR AGREES THAT HE SHALL ASSUME SOLE AND COMPLETE RESPONSIBILITY FOR JOB SITE CONDITIONS DURING THE COURSE OF CONSTRUCTION OF THIS PROJECT, INCLUDING SAFETY OF ALL PERSONS AND PROPERTY; THAT THIS REQUIREMENT SHALL APPLY CONTINUOUSLY AND NOT BE LIMITED TO NORMAL WORKING HOURS; AND THAT THE CONTRACTOR SHALL DEFEND, INDEMNIFY AND HOLD THE OWNER, ENGINEER, UNIVERSITY HARMLESS FROM ANY AND ALL LIABILITY, REAL OR ALLEGED, IN CONNECTION WITH THE PERFORMANCE OF WORK ON THIS PROJECT, EXCEPTING FOR LIABILITY ARISING FROM THE SOLE NEGLIGENCE OF THE OWNER OR THE ENGINEER.
8. THE CONTRACTOR SHALL BE HELD RESPONSIBLE FOR ANY FIELD CHANGES MADE WITHOUT WRITTEN AUTHORIZATION FROM THE ENGINEER.
9. THE CONTRACTOR SHALL PROVIDE ALL LIGHTS, SIGNS, BARRICADES, FLAGMEN, OR OTHER DEVICES NECESSARY FOR PUBLIC SAFETY IN ACCORDANCE WITH THE CURRENT ISSUE OF "MANUAL OF TRAFFIC CONTROLS, WARNING SIGNS, LIGHTS, AND DEVICES FOR USE IN PERFORMANCE OF WORK UPON HIGHWAY" PUBLISHED BY THE STATE OF CALIFORNIA BUSINESS AND TRANSPORTATION AGENCY. CONTRACTOR SHALL COORDINATE WITH THE GOVERNING LOCAL AGENCY TO DETERMINE IF ANY CHANGES TO THE CLASSIFICATION OR OPERATION OF A ROADWAY ARE REQUIRED DUE TO THE IMPROVEMENTS SHOWN ON THESE PLANS (SUCH AS SPEED LIMITS, INTERSECTION TYPE, ETC.) AND SHALL BE RESPONSIBLE FOR PROVIDING ALL NECESSARY INTERIM TRAFFIC MANAGEMENT MEASURES REQUIRED BY THE GOVERNING AGENCY, INCLUDING TRANSITIONAL SIGNAGE AND STRIPING IN PREPARATION OF AND TO BE INSTALLED PRIOR TO COMPLETION AND ACCEPTANCE OF ULTIMATE SIGNAGE AND STRIPING. CONTRACTOR SHALL BE RESPONSIBLE FOR ALL COSTS ASSOCIATED WITH IMPLEMENTING THESE MEASURES.
10. THE OFFICE OF CALIFORNIA STATE UNIVERSITY STANISLAUS SHALL BE NOTIFIED AT LEAST 48 HOURS IN ADVANCE OF ANY WORK.
11. CABLE TV, ELECTRICAL, GAS, AND TELEPHONE UNDERGROUND WORK SHALL BE COMPLETED PRIOR TO CONSTRUCTION OF THE CURB, GUTTER, SIDEWALK AND PAVING.
12. THE CONTRACTOR SHALL OBTAIN AN ENCROACHMENT PERMIT FROM THE CITY OF TURLOCK, DEPARTMENT OF PUBLIC WORKS OR ANY OTHER APPLICABLE AGENCY PRIOR TO COMMENCEMENT OF WORK WITHIN EXISTING CITY RIGHT-OF-WAY. THE CONTRACTOR SHALL BE RESPONSIBLE FOR ALL PERMITS AND LICENSES REQUIRED FOR THE CONSTRUCTION AND COMPLETION OF THE PROJECT.
13. CALIFORNIA STATE UNIVERSITY STANISLAUS OR ASSOCIATED UTILITY COMPANY AND RESIDENCES TO BE AFFECTED SHALL BE NOTIFIED IMMEDIATELY UPON ANY UTILITY SERVICE DISRUPTION OTHER THAN SPECIFIED ON THESE IMPROVEMENT PLANS AND A TWENTY-FOUR (24) HOUR NOTICE SHALL BE GIVEN FOR ANY PLANNED DISRUPTION.
14. STREET SIGNS, TRAFFIC CONTROL SIGNS, AND PAVEMENT MARKINGS SHALL BE PROVIDED AND INSTALLED BY THE CONTRACTOR AT LOCATIONS ESTABLISHED BY THE ENGINEER.
15. THE CONTRACTOR SHALL BE RESPONSIBLE FOR PROTECTING EXISTING IMPROVEMENTS FROM DAMAGE. COST OF REPLACING DAMAGED EXISTING IMPROVEMENTS SHALL BE INCLUDED IN THE UNIT PRICE BID FOR ITEMS REQUIRING REMOVAL AND REPLACEMENT.
16. CONTRACTOR IS RESPONSIBLE FOR COORDINATION OF THE REMOVAL OR RELOCATION OF ALL EXISTING UTILITIES WITH RESPECTIVE UTILITY COMPANIES.
17. ASPHALT CONCRETE SHALL BE PLACED ONLY WHEN THE ATMOSPHERIC TEMPERATURE IS ABOVE 50°F AND RISING.
18. DRAWING NUMBERS SHOWN ON THE PLANS REFER TO DRAWINGS CONTAINED IN THE CITY OF TURLOCK STANDARD SPECIFICATIONS (I.E. DRAWING NO. C-1).
19. ALL TRENCHES IN PAVED AREAS SHALL BE PAVED WITH TEMPORARY PAVING, OR COVERED WITH A STEEL PLATE OF APPROPRIATE SIZE AND STRENGTH, THE SAME DAY THE PAVEMENT CUT IS MADE.
20. WHENEVER PAVEMENT IS BROKEN OR CUT IN THE INSTALLATION OF THE WORK COVERED BY THESE SPECIFICATIONS AND PLANS, THE PAVEMENT SHALL BE REPLACED, AFTER PROPER BACK FILLING, WITH PAVEMENT MATERIALS EQUAL TO OR BETTER THAN THE MATERIALS USED IN THE ORIGINAL PAVING. THE FINISHED PAVEMENT SHALL BE SUBJECT TO THE APPROVAL OF THE REVIEWING AGENCY.
21. PRIOR TO COMMENCING ANY WORK, IT SHALL BE THE CONTRACTORS RESPONSIBILITY TO HAVE EACH UTILITY COMPANY LOCATED, IN THE FIELD, THEIR MAIN AND SERVICE LINES. THE CONTRACTOR SHALL NOTIFY MEMBERS OF THE UNDERGROUND SERVICE ALERT (U.S.A.) FORTY-EIGHT (48) HOURS IN ADVANCE OF PERFORMING ANY EXCAVATION WORK BY CALLING THE TOLL-FREE NUMBER (800) 227-2600. THE CONTRACTOR SHALL RECORD THE U.S.A. ORDER NUMBER. IT SHALL BE THE CONTRACTOR'S SOLE RESPONSIBILITY TO PROTECT ALL EXISTING UTILITIES SO THAT NO DAMAGE RESULTS TO THEM DURING THE PERFORMANCE OF THIS CONTRACT. ANY REPAIRS NECESSARY TO DAMAGED UTILITIES SHALL BE PAID FOR BY THE CONTRACTOR. THE CONTRACTOR SHALL BE REQUIRED TO COOPERATE WITH OTHER CONTRACTORS AND UTILITY COMPANIES INSTALLING NEW STRUCTURES, UTILITIES AND SERVICE TO THE DEVELOPMENT.
22. PAYMENT FOR PAVEMENT WILL BE MADE ONLY FOR AREAS SHOWN ON THE PLANS. REPLACEMENT OF PAVEMENT WHICH IS BROKEN OR CUT DURING THE INSTALLATION OF THE WORK COVERED BY THESE SPECIFICATIONS AND PLANS, AND WHICH LIES OUTSIDE OF SAID AREAS, SHALL BE INDICATED IN THE CONTRACTOR'S UNIT PRICE FOR PAVEMENT, AND NO ADDITIONAL PAYMENT SHALL BE MADE FOR SUCH WORK.
23. EXCAVATIONS OF 5 FEET OR MORE IN DEPTH WILL REQUIRE AN EXCAVATION PERMIT FROM THE STATE OF CALIFORNIA DEPARTMENT OF INDUSTRIAL SAFETY. FOR TRENCHES 5 FEET OR MORE IN DEPTH, THE CONTRACTOR SHALL COMPLY WITH SECTION 5-1.02A OF THE CALTRANS STANDARDS, CHAPTER 9 OF THE STATE OF CALIFORNIA LABOR CODE, AND ANY LOCAL CODES OR ORDINANCES.
24. WE CALL YOUR ATTENTION TO TITLE 8 CALIFORNIA ADMINISTRATION CODE SECTION 1540 (A) (1) OF THE CONSTRUCTION SAFETY ORDERS ISSUED BY THE OCCUPATIONAL SAFETY AND HEALTH STANDARDS BOARD PURSUANT TO THE CALIFORNIA OCCUPATIONS SAFETY AND HEALTH ACT OF 1973 AS AMENDED WHICH STATES: (1) PRIOR TO OPENING AN EXCAVATION EFFORT SHALL BE MADE TO DETERMINE WHETHER UNDERGROUND INSTALLATIONS; I.E. SEWER, WATER, FUEL, ELECTRICAL LINES, ETC., WILL BE ENCOUNTERED AND IF SO, WHERE SUCH UNDERGROUND INSTALLATIONS ARE LOCATED. WHEN THE EXCAVATION APPROACHES THE APPROXIMATE LOCATION OF SUCH INSTALLATION, THE EXACT LOCATION SHALL BE DETERMINED BY CAREFUL PROBING OR HAND DIGGING; AND, WHEN IT IS UNCOVERED, ADEQUATE PROTECTION SHALL BE PROVIDED FOR THE EXISTING INSTALLATION. ALL KNOWN OWNERS OF UNDERGROUND FACILITIES IN THE AREA CONCERNED SHALL BE ADVISED OF PROPOSED WORK AT LEAST FORTY-EIGHT (48) HOURS PRIOR TO THE START OF ACTUAL EXCAVATION.
25. THE CONTRACTOR SHALL MAINTAIN A NEATLY MARKED SET OF FULL-SIZE AS-BUILT RECORD DRAWINGS SHOWING THE FINAL LOCATION AND LAYOUT OF ALL MECHANICAL, ELECTRICAL AND INSTRUMENTATION EQUIPMENT, PIPING AND CONDUITS, STRUCTURES AND OTHER FACILITIES. AS-BUILT RECORD DRAWINGS SHALL REFLECT CHANGE ORDERS, ACCOMMODATIONS, AND ADJUSTMENTS TO ALL IMPROVEMENTS CONSTRUCTED. WHERE NECESSARY, SUPPLEMENTAL DRAWINGS SHALL BE PREPARED AND SUBMITTED BY THE CONTRACTOR TO THE DEVELOPER AND APPROVAL AGENCY.
26. SIGNING, STRIPING AND PAVEMENT MARKINGS SHALL BE IN STRICT CONFORMANCE WITH THE MANUAL OF UNIFORM TRAFFIC CONTROL DEVICES (MUTCD) LATEST EDITION, MUTCD CALIFORNIA SUPPLEMENTS.
27. PRIOR TO ACCEPTANCE OF THE PROJECT, THE CONTRACTOR SHALL DELIVER TO THE ENGINEER, ONE SET OF NEATLY MARKED AS-BUILT RECORD DRAWINGS SHOWING THE INFORMATION REQUIRED ABOVE. AS-BUILT RECORD DRAWINGS SHALL BE REVIEWED AND THE COMPLETE AS-BUILT RECORD DRAWING SET SHALL BE CURRENT WITH ALL CHANGES AND DEVIATIONS REDLINED AS A PRECONDITION TO THE FINAL PROGRESS PAYMENT APPROVAL AND/OR FINAL ACCEPTANCE.
28. AFTER CONSTRUCTION OF ALL IMPROVEMENTS, THE CONTRACTOR SHALL SUBMIT ONE SET OF REPRODUCIBLE PLANS, FINAL INVERT ELEVATIONS FOR SEWER AND STORM DRAIN LINES THAT ARE TO BE EXTENDED FOR FUTURE CONSTRUCTION SHALL ALSO BE SHOWN ON THE "AS-BUILT" PLANS ALL AS PROVIDED BY THE CONTRACTOR.
29. THE CONTRACTOR SHALL NOTIFY NORTHSTAR ENGINEERING AT LEAST 48 HOURS PRIOR TO BACK FILLING OF ANY PIPE WHICH STUBS TO A FUTURE PHASE OF CONSTRUCTION FOR INVERT VERIFICATION. TOLERANCE SHALL BE IN ACCORDANCE WITH THE UNIVERSITY STANDARD SPECIFICATIONS.
30. WHENEVER EXISTING FACILITIES ARE REMOVED, DAMAGED, BROKEN, OR CUT IN THE INSTALLATION OF THE WORK COVERED BY THESE PLANS OR SPECIFICATIONS, SAID FACILITIES SHALL BE REPLACED AT THE CONTRACTOR'S EXPENSE, AFTER PROPER BACKFILLING AND/OR CONSTRUCTION, WITH MATERIALS EQUAL TO OR BETTER THAN THE MATERIALS USED IN THE ORIGINAL EXISTING FACILITIES. THE FINISHED PRODUCT SHALL BE SUBJECT TO THE APPROVAL OF THE OWNER, THE ENGINEER, AND THE RESPECTIVE REGULATORY AGENCY.
31. DUST CONTROL SHALL BE PROVIDED AT ALL TIMES, AT THE CONTRACTORS EXPENSE TO MINIMIZE ANY DUST NUISANCE AND SHALL BE IN ACCORDANCE WITH THE REQUIREMENTS OF THE UNIVERSITY. CONTRACTOR SHALL OBTAIN A PERMIT FROM CALIFORNIA STATE UNIVERSITY STANISLAUS FOR USE OF WATER FROM FIRE HYDRANTS FOR CONSTRUCTION PURPOSES. THE PERMIT SHALL BE APPROVED BY THE UNIVERSITY FIRE DEPARTMENT.
32. CONTRACTOR SHALL PROVIDE THE UNIVERSITY WITH A CERTIFICATE SIGNED BY A REGISTERED CIVIL ENGINEER OR LAND SURVEYOR STATING THAT ALL BUILDING PAD ELEVATIONS ARE IN ACCORDANCE WITH THE APPROVED GRADING PLAN.
33. UNLESS OTHERWISE STATED, ALL STATIONS INDICATED ON THE IMPROVEMENT PLANS ARE REFERENCED TO THE CENTERLINE OF THE STREET. ALL STATIONS OFF CENTER ARE PERPENDICULAR TO OR RADIALLY OPPOSITE CENTERLINE STATIONS, UNLESS OTHERWISE NOTED.
34. DRIVEWAYS ON STREETS TO BE LOCATED IN THE FIELD BY THE ENGINEER AT THE TIME OF CONSTRUCTION. DRIVEWAYS SHALL NOT COINCIDE WITH WHEELCHAIR RAMPS.

GENERAL NOTES (CONT)

35. IF THE PROJECT IS SUBJECT TO THE INDIRECT SOURCE REVIEW (ISR) REQUIREMENT, THE CONTRACTOR IS REQUIRED TO KEEP DAILY RECORDS OF THE TOTAL HOURS OF OPERATION FOR EACH PIECE OF EQUIPMENT GREATER THAN 50-HORSEPOWER BEING USED ON THE PROJECT SITE DURING CONSTRUCTION. WITHIN 30 DAYS OF COMPLETING CONSTRUCTION OF EACH PROJECT PHASE, A REPORT SUMMARIZING TOTAL HOURS OF OPERATION BY EQUIPMENT TYPE, MODEL, YEAR, AND HORSEPOWER FOR EACH PIECE OF CONSTRUCTION EQUIPMENT GREATER THAN 50-HORSEPOWER MUST BE SUBMITTED TO THE AIR DISTRICT. TO ASSIST IN THIS RECORDKEEPING, THE "DETAILED FLEET TEMPLATE" IS AVAILABLE ON THE DISTRICT'S WEBSITE AT HTTP://WWW.VALLEYAIR.ORG/ISR/ISRFORMSANDAPPLICATIONS.HTM. FOR EACH PROJECT PHASE. THE DISTRICT WILL VERIFY THAT THE FLEET DETAILS ACHIEVED THE REQUIRED EMISSION REDUCTIONS. IF THE CONTRACTOR IS NOT GOING TO MEET THE STANDARDS AND/OR RECORD KEEPING REQUIRED BY THE AIR DISTRICT, THE CONTRACTOR SHALL NOTIFY THE AIR BOARD PRIOR TO CONSTRUCTION SO THE NECESSARY MITIGATION FEE SHALL BE PAID. IF THE AIR BOARD IS NOT NOTIFIED PRIOR TO CONSTRUCTION, THE CONTRACTOR SHALL BE REQUIRED TO PAY THE PENALTY TO THE AIR BOARD.
36. PRIOR TO FINALIZING IMPROVEMENTS AND OPENING ROADS THE CONTRACTOR SHALL COORDINATE WITH THE GOVERNING LOCAL AGENCY FOR POTENTIAL TRAFFIC SIGNAGE AND STRIPING MODIFICATIONS (FOR EXAMPLE, SPEED LIMIT CHANGES OR REDUCTIONS) BEYOND THE PROJECT LIMITS THAT ARE NECESSITATED BY THE CONSTRUCTION OF THE IMPROVEMENTS SHOWN ON THESE PLANS. CONTRACTOR SHALL BE RESPONSIBLE FOR ALL COSTS ASSOCIATED WITH SIGNAGE AND STRIPING MODIFICATIONS REQUIRED BY THE GOVERNING AGENCY.
37. ANY ASSUMPTION MADE BY THE CONTRACTOR IS NOT THE RESPONSIBILITY OF THE ENGINEER OR DESIGN CONSULTANT. CONTRACTOR SHALL SUBMIT A PRE-BID REQUEST FOR INFORMATION (RFI) FOR ANY CLARIFICATION NEEDED AND SHALL BE RESPONSIBLE FOR COMPLETING THE PROJECT AT THE CONTRACTOR'S EXPENSE FOR ANY WRONG ASSUMPTIONS MADE.

GRADING NOTES

1. EARTHWORK SHALL BE PERFORMED IN ACCORDANCE WITH THE PROJECT SOILS REPORT AND PROJECT SPECIFICATIONS. ALL FILL AREAS SHALL BE TESTED AS REQUIRED BY CALIFORNIA STATE UNIVERSITY STANISLAUS.
2. THE DEVELOPER SHALL BE RESPONSIBLE FOR COST OF INITIAL TEST FOR MOISTURE DENSITY CURVE. IF THE FIRST TEST FAILS, THE DEVELOPER SHALL BE RESPONSIBLE FOR COST OF ALL SUBSEQUENT TESTS AND CURVES.
3. THE CONTRACTOR SHALL REVIEW SITE PRIOR TO BIDDING. ALL VEGETATION AND DELETERIOUS MATERIALS SHALL BE REMOVED FROM THE SITE AT THE EXPENSE OF THE CONTRACTOR AND SHALL BE INCLUDED IN THE LUMP SUM CLEARING COST.
4. THE CONTRACTOR SHALL PRESERVE ALL STAKES AND POINTS SET FOR LINES, GRADES OR MEASUREMENT OF THE WORK IN THEIR PROPER PLACES UNTIL AUTHORIZED TO REMOVE THEM BY THE ENGINEER. ALL EXPENSES INCURRED IN REPLACING STAKES THAT HAVE BEEN REMOVED WITHOUT PROPER AUTHORITY SHALL BE PAID FOR BY THE CONTRACTOR.
5. CONTRACTOR'S PRICE SHALL INCLUDE COST TO ACHIEVE A BALANCED SITE. IT IS THE CONTRACTOR'S RESPONSIBILITY TO IMPORT AND EXPORT MATERIAL AS REQUIRED TO BALANCE SITE.
6. CONTRACTOR SHALL GRADE ALL LANDSCAPE AREAS TO WITHIN 0.10 FEET OF FINAL GRADE ELEVATIONS WITH APPROPRIATE LANDSCAPE SECTIONS INCLUDED.
7. ALL A.C. PAVING SHALL BE FOG SEALED PER SECTION 37 OF CALTRANS STANDARD SPECIFICATIONS, THE LATEST EDITION.
8. GRADE TAGS LOCATED ON CURBS REFERENCE TOP OF CURB ELEVATION UNLESS OTHERWISE NOTED. ADDITIONAL DESCRIPTIONS ARE PROVIDED TO DENOTE HORIZONTAL AND VERTICAL CHANGES IN ACCORDANCE WITH ABBREVIATIONS DEFINED ON COVER SHEET.
9. THE CONTRACTOR SHALL BE RESPONSIBLE FOR DETERMINING HIS OWN EARTHWORK QUANTITIES FOR BIDDING, CONTRACT AND CONSTRUCTION PURPOSE. IF IT APPEARS THERE WILL BE AN EXCESS OR SHORTAGE OF MATERIAL, THE CONTRACTOR SHALL NOTIFY THE ENGINEER TO DETERMINE IF POSSIBLE GRADE ADJUSTMENTS CAN BE MADE.
10. SITE CONTRACTOR SHALL COORDINATE WITH BUILDING CONTRACTOR TO ACCOMMODATE THE PROPER CLEARANCE BETWEEN THE BOTTOM OF THE STUCCO AND THE TOP OF THE GRADE TREATMENT ALONG THE BUILDING AS APPLICABLE. IN ACCORDANCE WITH SECTION 2512.1.2. OF THE MOST CURRENT CALIFORNIA BUILDING CODE, IF THE SUBJECT BUILDING SIDING TREATMENT IS STUCCO, CONTRACTOR SHALL NOTIFY ENGINEER IF ANY GRADES ARE ADJUSTED. CONTRACTOR SHALL ALSO APPLY FLASHING WHERE APPLICABLE WITHIN AREAS OF GRADE TRANSITION.
11. ALL LANDSCAPE AREAS THAT ABUT ANY PORTION OF THE BUILDING SHALL BE GRADED SUCH THAT THE FINISHED GRADE IN LANDSCAPE AREAS SHALL BE A MINIMUM OF EIGHT INCHES (8") BELOW FINISHED FLOOR OF THE ABUTTING BUILDING AND IN NO CASE SHALL THE LANDSCAPE AREA BE GRADED ON LANDSCAPED SUCH THAT WATER DRAINS TOWARD THE BUILDING.
12. SINCE THE ENGINEER CANNOT CONTROL THE EXACT METHOD OR MEANS USED BY THE CONTRACTOR DURING GRADING OPERATIONS, NOR CAN THE ENGINEER GUARANTEE THE EXACT SOIL CONDITION OVER THE ENTIRE SITE, THE ENGINEER ASSUMES NO RESPONSIBILITY FOR FINAL EARTHWORK QUANTITIES.
13. CONTRACTOR IS RESPONSIBLE FOR THE OFF HAUL AND DISPOSAL OF ANY AND ALL EXCESS DIRT FROM CONSTRUCTION SITE.
14. CONTRACTOR SHALL COORDINATE WITH THE EXISTING ADJOINING PROPERTY OWNERS PRIOR TO ANY WORK BEING STARTED THAT MAY AFFECT THEIR PROPERTY.
15. CONTRACTOR SHALL PROVIDE A SMOOTH TRANSITION FROM THE PROPOSED GRADING TO THE EXISTING FLOWLINE, CURB, CONCRETE, AND OR PAVEMENT ELEVATIONS.
16. ALL EXISTING WELLS AND SEPTIC TANKS SHALL BE REMOVED AND/OR ABANDONED PER THE REQUIREMENTS OF THE COUNTY HEALTH DEPARTMENT AND UNIVERSITY. THIS WORK SHALL BE INCLUDED IN THE LUMP SUM CLEARING COST.
17. CONTRACTOR SHALL VERIFY BUILDING SUBGRADE SECTIONS WITH ARCHITECT PLANS BEFORE CONSTRUCTION. IF A DISCREPANCY EXISTS, CONTRACTOR TO NOTIFY THE ENGINEER IMMEDIATELY.
18. PRIOR TO CONSTRUCTING ANY FLATWORK THE CONTRACTOR SHALL VERIFY THE FINISH FLOOR ELEVATIONS AT ALL DOORS. NOTE THAT FINISH FLOOR ELEVATIONS MAY HAVE BEEN CHANGED DUE TO FOUNDATION ADJUSTMENTS IN FIELD. CONTRACTOR SHALL HOLD ADJUSTED FINISH FLOOR GRADES, ACCOUNT FOR DOOR THRESHOLDS, AND ADJUST GRADES AS NECESSARY TO STAY IN COMPLIANCE WITH CURRENT ADA STANDARDS. CONTRACTOR SHALL NOTIFY NORTHSTAR ENGINEERING IMMEDIATELY IF ANY GRADE ADJUSTMENTS WILL CREATE ADA ACCESSIBILITY ISSUES.
19. THE VALUES SHOWN ON THE GRADING PLAN ARE FOR REFERENCE AND FEE PURPOSES ONLY. SINCE THE ENGINEER CANNOT CONTROL THE EXACT METHOD OR MEANS USED BY THE CONTRACTOR DURING GRADING OPERATIONS, NOR CAN THE ENGINEER GUARANTEE THE EXACT SOIL CONDITION OVER THE ENTIRE SITE, THE ENGINEER ASSUMES NO RESPONSIBILITY FOR FINAL EARTHWORK QUANTITIES.
20. THE VALUES SHOWN ON THE GRADING PLAN ARE TO AID THE CONTRACTOR IN DETERMINING THE QUANTITIES OF DIRT TO BE MOVED. THE CUT AND FILL QUANTITIES SHOWN INDICATE A THEORETICAL YARDAGE FIGURE AND ARE GIVEN ONLY AS A CONVENIENCE TO THE CONTRACTOR. THE QUANTITIES SHOWN SHALL NOT BE USED AS THE BASIS OF BID COSTS.
21. EARTHWORK QUANTITY VALUES SHOWN ON PAVING PLAN REPRESENT THE DIFFERENCE BETWEEN THE ESTIMATED EXISTING GRADES FROM ASBUILT DOCUMENTS COMPARED WITH THE SUBGRADE STRUCTURAL SECTIONS OF THE PROPOSED GRADING DESIGN. SEE STRUCTURAL SECTIONS IN HATCH LEGEND ON PAVING PLAN.
22. EARTHWORK QUANTITY CALCULATIONS DO NOT INCLUDE STRIPPING, SHRINKAGE, SWELL FACTORS OR MATERIAL FROM UTILITY TRENCH SPOILS.

SANITARY SEWER NOTES

1. ALL SANITARY SEWER CONSTRUCTION, MATERIALS AND WORKMANSHIP SHALL BE IN ACCORDANCE WITH THE REQUIREMENTS OF THE CALIFORNIA PLUMBING CODE.
2. THE CONTRACTOR SHALL EXPOSE EXISTING SANITARY SEWER WHERE CONNECTION IS TO BE MADE, SO THAT THE ENGINEER CAN VERIFY EXISTING FLOW LINES AND LOCATIONS BEFORE START OF CONSTRUCTION.
3. SEWER MAINS SHALL BE INSTALLED FROM THE EXISTING FACILITIES UPSTREAM TO THE END OF THE LINE.
4. ALL SANITARY SEWER CONSTRUCTION SHALL BE DONE IN ACCORDANCE WITH THE REQUIREMENTS OF THE UNIVERSITY. MAIN LINES AND LATERAL SHALL BE AIR TESTED FOR LEAKAGE IN CONFORMANCE WITH THE UNIVERSITY STANDARDS.
5. ALL TESTING REQUIRED BY THE UNIVERSITY SHALL BE THE RESPONSIBILITY OF THE CONTRACTOR, INCLUDING THE TELEVISING OF ALL SEWER LINES.
6. THE CONTRACTOR SHALL PROVIDE ALL SHORING, BRACING, SLOPING OR OTHER PROVISIONS NECESSARY TO PROTECT WORKMEN FOR ALL AREAS TO BE EXCAVATED TO A DEPTH OF 5 FEET OR MORE. SAID PROTECTION TO BE IN ACCORDANCE WITH THE REQUIREMENTS OF THE UNIVERSITY AND STATE REGULATIONS.
7. SEWER PIPE SHALL BE IN ACCORDANCE WITH TABLE 701.2 OF THE 2019 CALIFORNIA PLUMBING CODE. CONTRACTOR SHALL HAVE PIPE MANUFACTURER PERFORM CALCULATIONS TO DETERMINE PIPE CLASS PRIOR TO CONSTRUCTION DUE TO EXCESSIVE DEPTH.
8. THE CONTRACTOR SHALL PROVIDE ALL LIGHTS, SIGNS, BARRICADES, FLAGMEN, OR OTHER DEVICES NECESSARY FOR PUBLIC SAFETY.
9. ALL SANITARY SEWER CONSTRUCTION SHALL COMPLY WITH THE REQUIREMENTS OF THE STATE HEALTH DEPARTMENT. WHERE SANITARY SEWER SERVICES AND LATERALS CROSS ABOVE WATER MAINS, A 20 FEET MINIMUM JOINT OF PVC C-900, CLASS 200, OR AN 18 FEET JOINT OF CLASS 50 D.I.P., SHALL BE CENTERED ON THE SEWER MAIN. CONTRACTOR SHALL CONSTRUCT ALL CROSSINGS IN ACCORDANCE WITH THE CALIFORNIA HEALTH DEPARTMENT REQUIREMENTS.
10. SEWER CONTRACTOR SHALL VERIFY LOCATION OF ALL EXISTING UNDERGROUND UTILITIES, AND WILL BE RESPONSIBLE FOR THE PROTECTION OF SAME.
11. MAINTENANCE HOLE CASTINGS AND COVERS SHALL BE ADJUSTED TO FINISH GRADES BY THE PAVING CONTRACTOR AFTER STREET IMPROVEMENTS ARE COMPLETED. COST FOR ADJUSTING FACILITIES TO BE INCLUDED IN THE UNIT PRICE FOR MAINTENANCE HOLES AND CLEANOUTS.
12. THE CONTRACTOR SHALL BE RESPONSIBLE FOR ADEQUATELY MARKING INSTALLED LOCATION OF SERVICE LATERALS. THE CONTRACTOR SHALL STAMP AN "S" AT THE CURB FACE DIRECTLY OVER THE SERVICE.
13. SANITARY SEWER SYSTEM WILL BE PRIVATELY OWNED AND MAINTAINED.

NPDES NOTES

1. STORM DRAIN NPDES PERMIT TO COMPLY WITH THE STATE OF CALIFORNIA'S STATEWIDE GENERAL NPDES PERMIT, REGULATING DISCHARGES OF STORM WATER ASSOCIATED WITH CONSTRUCTION ACTIVITY FROM SOIL DISTURBANCES OF ONE (1) ACRE OR MORE. A NOTICE OF INTENT (NOI) TO COMPLY WITH THE TERMS OF THE GENERAL PERMIT TO DISCHARGE STORM WATER ASSOCIATED WITH CONSTRUCTION ACTIVITY MUST BE FILED AND THE APPROPRIATE FEE PAID PRIOR TO COMMENCEMENT OF CONSTRUCTION. IN ADDITION, AT THE CONCLUSION OF THE PROJECT A NOTICE OF TERMINATION (NOT) MUST ALSO BE FILED. SUBMIT THE FEE, NOI, AND NOT TO THE STATE WATER RESOURCES CONTROL BOARD UTILIZING THE STORM WATER MULTIPLE APPLICATION AND REPORT TRACKING SYSTEM (SMARTS) AT THE FOLLOWING ADDRESS:

   WWW.SMARTS.WATERBOARDS.CA.GOV

   FEES AND PAYMENTS CAN BE MADE TO THE FOLLOWING ADDRESS:

   STATE WATER RESOURCES CONTROL BOARD
   DIVISION OF WATER QUALITY
   ATTN: STORM WATER PERMIT UNIT
   P.O. BOX 1977
   SACRAMENTO, CA 95812-1977

   IF YOU HAVE ANY QUESTIONS CALL JOSEPH HENAO, WATER QUALITY CONTROL ENGINEER, CALIFORNIA REGIONAL WATER QUALITY CONTROL BOARD, AT (916) 255-3028.

THE FOLLOWING MUST BE SUBMITTED TO THE UNIVERSITY PRIOR TO BEGINNING WORK AND PRIOR TO THE ISSUANCE OF AN ENCROACHMENT PERMIT:

A) TRANSMITTAL MEMO THAT INCLUDES:
   * THE NAME AND PHONE NUMBER OF THE PERSON RESPONSIBLE FOR SWPPP IMPLEMENTATION, AND
   * IF APPLICABLE, A LISTING OF THE POST-CONSTRUCTION BEST MANAGEMENT PRACTICES THAT WILL BE INSTALLED TO SATISFY THE REQUIREMENTS OF THE UNIVERSITY.
   * COPY OF SWPPP MUST REMAIN ON SITE DURING CONSTRUCTION AT ALL TIMES.

B) COPY OF A SIGNED NOTICE OF INTENT FORM OR A WASTE DISCHARGE IDENTIFICATION NUMBER.
   WDID#: CONTRACTOR TO PROVIDE PRIOR TO CONSTRUCTION; IF REQUIRED

DEWATERING NOTES

1. THE CONTRACTOR SHALL FURNISH, INSTALL, OPERATE AND MAINTAIN ALL MACHINERY APPLIANCES, AND EQUIPMENT TO MAINTAIN ALL EXCAVATIONS FREE FROM WATER DURING CONSTRUCTION. THE CONTRACTOR SHALL DISPOSE OF THE WATER SO AS NOT TO CAUSE DAMAGE TO PUBLIC OR PRIVATE PROPERTY, OR TO CAUSE A NUISANCE OR MENACE TO THE PUBLIC OR VIOLATE THE LAW. THE DEWATERING SYSTEM SHALL BE INSTALLED AND OPERATED SO THAT THE GROUNDWATER LEVEL OUTSIDE THE EXCAVATION IS NOT REDUCED TO THE EXTENT WHICH WOULD CAUSE DAMAGE OR ENDANGERED ADJACENT STRUCTURES OR PROPERTY. ALL COST FOR DEWATERING SHALL BE INCLUDED IN THE UNIT PRICE BID FOR ALL PIPE CONSTRUCTION. THE STATIC WATER LEVEL SHALL BE DRAWN DOWN A MINIMUM OF 1 FOOT BELOW THE BOTTOM OF EXCAVATIONS TO MAINTAIN THE UNDISTURBED STATE OF NATURAL SOILS AND ALLOW THE PLACEMENT OF ANY FILL TO THE SPECIFIED DENSITY. THE CONTRACTOR SHALL HAVE ON HAND, PUMPING EQUIPMENT AND MACHINERY IN GOOD WORKING CONDITION FOR EMERGENCIES AND SHALL HAVE WORKMEN AVAILABLE FOR ITS OPERATION. DEWATERING SY

NOTES:
1. *SUBGRADE PREPARATION REQUIREMENTS PER GEOTECHNICAL REPORT AND PROJECT SPECIFICATIONS.
2. AT EXPANSION JOINT USE 1/2"x24" SMOOTH DOWELS, 18"OC GREASE 1/2 THE LENGTH BEFORE CONCRETE PLACEMENT. SEE EXPANSION JOINT DETAIL ON THIS SHEET.
3. CONSTRUCT CONTROL AND CONSTRUCTION JOINTS IN ACCORDANCE WITH CURRENT PORTLAND CEMENT ASSOCIATION GUIDELINES.
4. SEE STRUCTURAL SECTIONS ON DIMENSION AND PAVING PLAN.

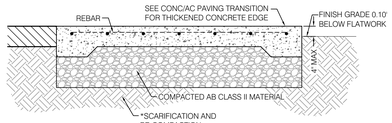

1 CONCRETE FLATWORK
NTS

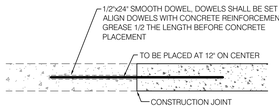

2 CONSTRUCTION JOINT
NTS

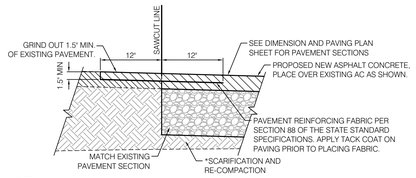

NOTE:
1. *SUBGRADE PREPARATION REQUIREMENTS PER GEOTECHNICAL REPORT AND PROJECT SPECIFICATIONS.

3 LAP JOINT DETAIL
NTS

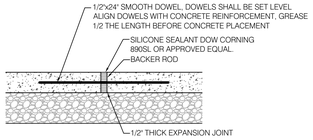

4 EXPANSION JOINT
NTS

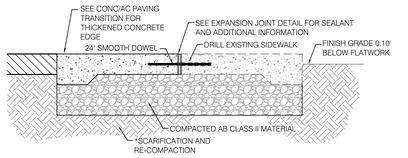

NOTES:
1. *SUBGRADE PREPARATION REQUIREMENTS GEOTECHNICAL REPORT AND PROJECT SPECIFICATIONS.
2. AT EXPANSION JOINT USE 1/2"x24" SMOOTH DOWELS, 18"OC GREASE 1/2 THE LENGTH BEFORE CONCRETE PLACEMENT.
3. CONTRACTOR SHALL EXTEND CONCRETE THICKENED EDGE TO SUBGRADE.

5 CONCRETE FLATWORK AT EXISTING FLATWORK
NTS

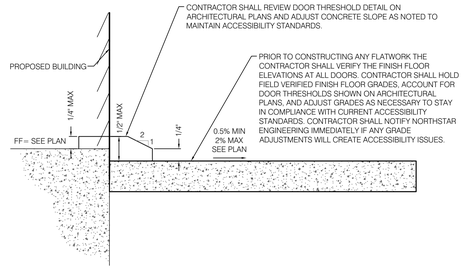

6 TYPICAL DOOR THRESHOLD AT CONCRETE LANDING
NTS

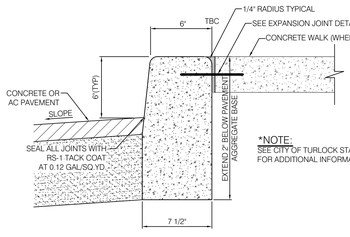

*NOTE:
SEE CITY OF TURLOCK STANDARD NO. C-1 FOR ADDITIONAL INFORMATION.

7 VERTICAL CURB DETAIL
NTS

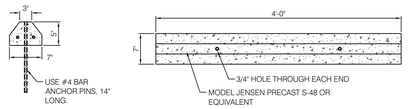

8 4' CONCRETE WHEEL STOP
NTS

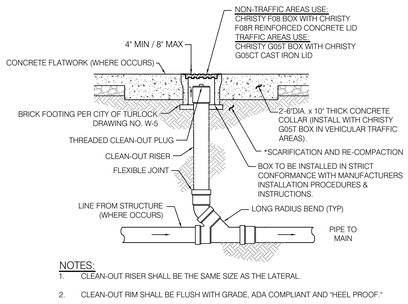

NOTES:
1. CLEAN-OUT RISER SHALL BE THE SAME SIZE AS THE LATERAL.
2. CLEAN-OUT RIM SHALL BE FLUSH WITH GRADE, ADA COMPLIANT AND "HEEL PROOF."
3. *SUBGRADE PREPARATION REQUIREMENTS PER GEOTECHNICAL REPORT AND PROJECT SPECIFICATIONS.

9 TYPICAL STORM DRAIN OR SANITARY SEWER CLEAN OUT RISER
NTS

NOTES:
1. ALL LANDSCAPE DRAINAGE PLANTER AREAS WILL REQUIRE AN ATRIUM GRATE AND ALL TURF AREAS WILL REQUIRE A FLAT GRATE. INSTALL NDS BLACK PLASTIC IN NON-TRAFFIC RATED AREAS. SEE STORM DRAINAGE SHEETS FOR ADDITIONAL INFORMATION.
2. ALL INLETS WITHIN PATH OF TRAVEL SHALL COMPLY WITH SECTION 1113A.5 OF THE CALIFORNIA BUILDING CODE.

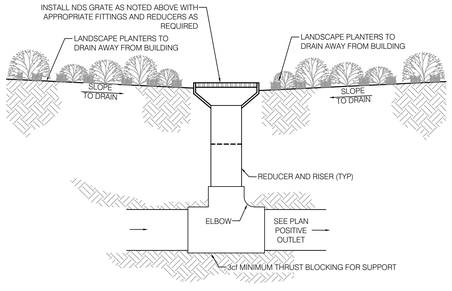

10 TYPICAL NDS LANDSCAPE DRAIN
NTS

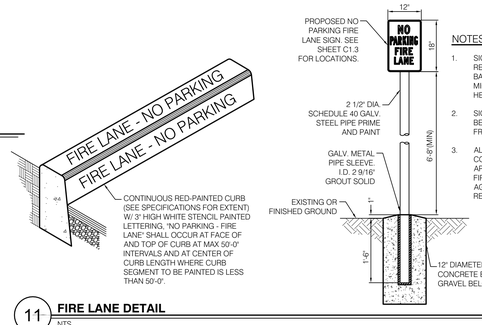

NOTES:
1. SIGN LETTERS SHALL BE RED WITH A WHITE BACKGROUND AND MINIMUM OF 1 INCH IN HEIGHT.
2. SIGN LETTERING SHALL BE CLEARLY VISIBLE FROM VEHICLE.
3. ALL SIGNAGE SHALL COMPLY WITH ALL APPLICABLE NATIONAL FIRE PROTECTION AGENCY (NFPA) REQUIREMENTS.

11 FIRE LANE DETAIL
NTS

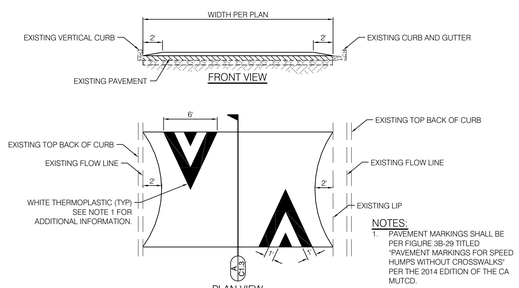

NOTES:
1. PAVEMENT MARKINGS SHALL BE PER FIGURE 3B-29 TITLED "PAVEMENT MARKINGS FOR SPEED HUMPS WITHOUT CROSSWALKS" PER THE 2014 EDITION OF THE CA MUTCD.
2. DO NOT OBSTRUCT FLOW OF DRAINAGE WHEN PLACING SPEED HUMP.
3. MAXIMUM STEP OF TRANSITION FROM PAVEMENT TO RAMP IS 0.5".

12 SPEED HUMP DETAIL
NTS

BUILDING CODE STANDARD DETAIL
REFER TO BUILDING CODE FOR STANDARD DESIGN AND NOTES

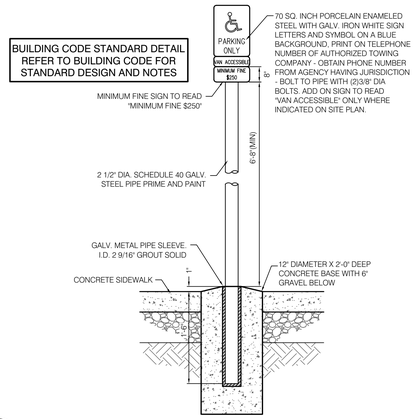

13 ACCESSIBLE PARKING SIGNAGE
NTS

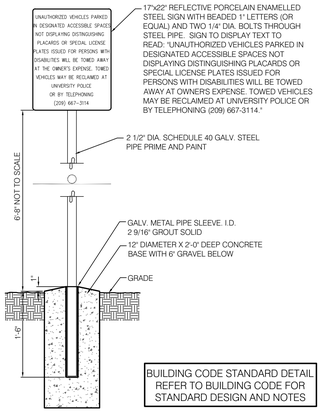

BUILDING CODE STANDARD DETAIL
REFER TO BUILDING CODE FOR STANDARD DESIGN AND NOTES

14 ACCESSIBLE PARKING SIGNAGE
NTS

NOTES:
1. SUBGRADE PREPARATION REQUIREMENTS PER GEOTECHNICAL REPORT AND PROJECT SPECIFICATIONS.
2. FIRE DEPARTMENT APPROVAL MUST BE OBTAINED PRIOR TO THE INSTALLATION OF THE MODIFIED DRIVE-OVER CURB AND GUTTER TO ENSURE THAT FIRE TRUCKS CAN DRIVE OVER AND CLEAR THE VERTICAL HEIGHT OF THE CURB.

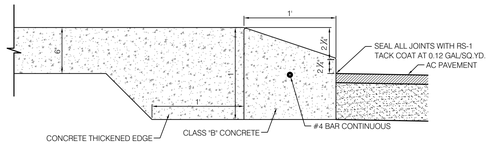

15 MODIFIED DRIVE-OVER CURB DETAIL
NTS

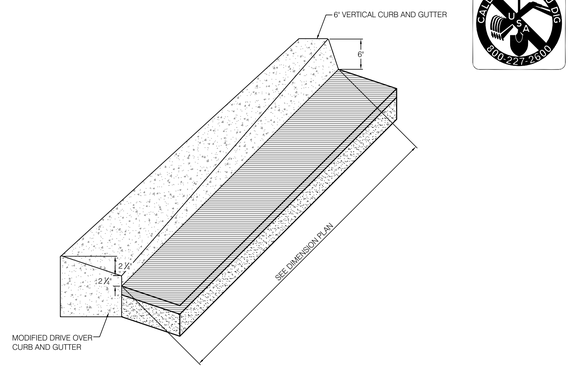

16 MODIFIED DRIVE-OVER CURB TO 6" VERTICAL CURB DETAIL
NTS

BUILDING CODE STANDARD DETAIL
REFER TO BUILDING CODE FOR STANDARD DESIGN AND NOTES

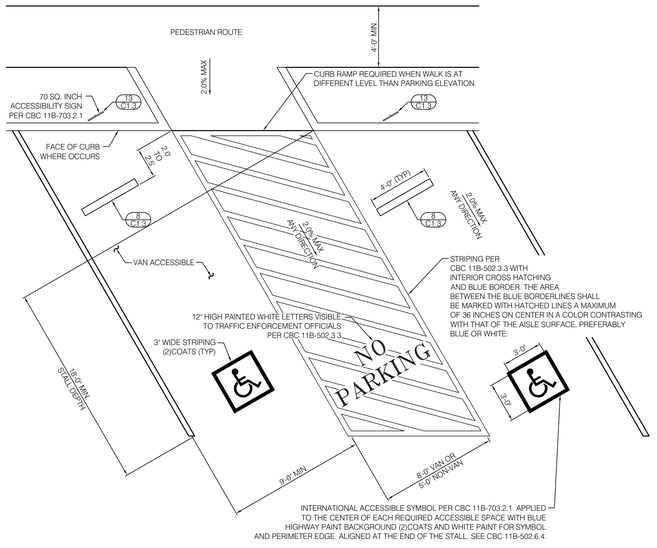

17 ACCESSIBLE PARKING DETAIL
NTS

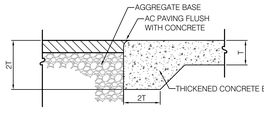

18 CONC / AC PAVING TRANSITION AND THICKENED EDGE
NTS

CALL BEFORE YOU DIG 800-227-2600

APPROVED
DIV. OF THE STATE ARCHITECT
APP: 02-119316 INC:
REVIEWED FOR
SS☐ FLS☐ ACS☑
DATE: 03/24/2022

Division of the State Archi

Office of the State Fire Marshal

OFFICE OF THE STATE FIRE MARSHAL
APPROVED FIRE AND PANIC ONLY
03/14/22
21-0498
Approval of this plan does not authorize or approve any omission or deviation from applicable regulations. Final approval is subject to field inspection. One set of approved plans shall be available on the project site at all times.

CSUS CHILD DEVELOPMENT CENTER

CALIFORNIA STATE UNIVERSITY, STANISLAUS
ONE UNIVERSITY CIRCLE
TURLOCK, CA 95382

ehdd.

PIER 1, BAY 2
THE EMBARCADERO
SAN FRANCISCO, CA 94111

INFO@EHDD.COM
+1 415-285-9193

Consultant

NorthStar Engineering Group, Inc.
* CIVIL ENGINEERING * SURVEYING * PLANNING *
620 12th Street Modesto, CA 95354
(209) 524-3525 Phone (209) 524-3526 Fax

Stamp

REGISTERED PROFESSIONAL ENGINEER CASEY R. MAHER No. C89547 12/06/2021 CIVIL STATE OF CALIFORNIA

Printing	Date
95% CONSTRUCTION DOCUMENTS	06.25.2021
PERMIT SET	08.16.2021
PERMIT SET - DSA V2	12.15.2021
PERMIT SET - SFM	12.21.2021

Revisions and Description	Date

Scale
As Shown

Drawn by
BEC

EHDD Job Number
20020

Sheet Title
DETAILS AND CROSS SECTIONS

Sheet Number
C1.3 **V3**

COPYRIGHT 2021 NORTHSTAR ENGINEERING GROUP, INC

PLOTTED: 12/06/2021 16:06 PLOTTED BY: CaseMaher
DWG NAME: T:\20-21\20 Child Development - Cue\Cad\A20 Plan\C1.3 - Details.dwg

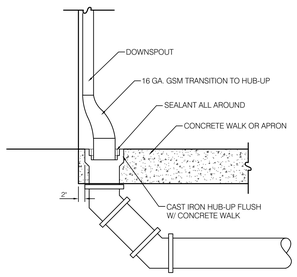

1 DOWNSPOUT CONNECTION TO STORM DRAIN
NTS

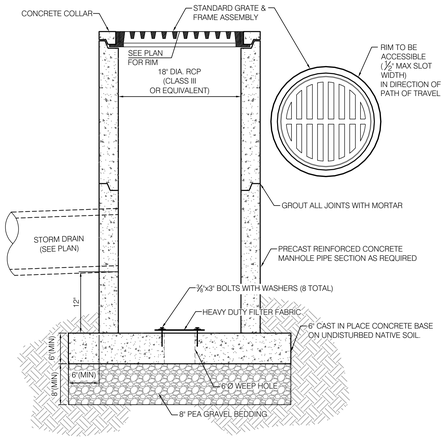

2 18" DIAMETER STORM DRAIN INLET DETAIL
NTS

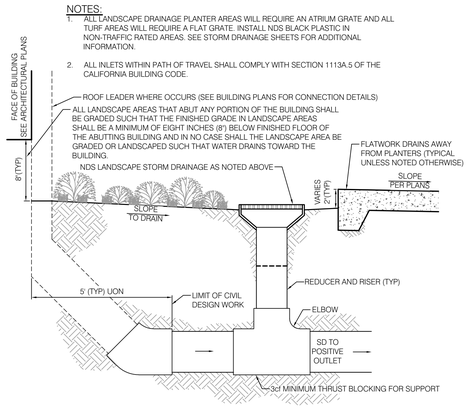

3 TYPICAL PLANTER DRAIN AT BUILDING
NTS

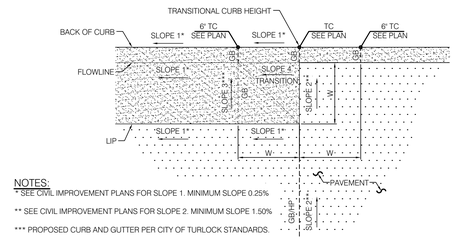

NOTES:
* SEE CIVIL IMPROVEMENT PLANS FOR SLOPE 1. MINIMUM SLOPE 0.25%

** SEE CIVIL IMPROVEMENT PLANS FOR SLOPE 2. MINIMUM SLOPE 1.50%

*** PROPOSED CURB AND GUTTER PER CITY OF TURLOCK STANDARDS.

4 TRANSITION AT GUTTER END - PLAN VIEW
NTS

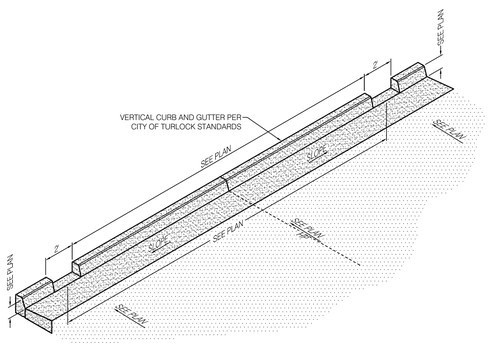

5 TYPICAL CURB CUT DETAIL
NTS

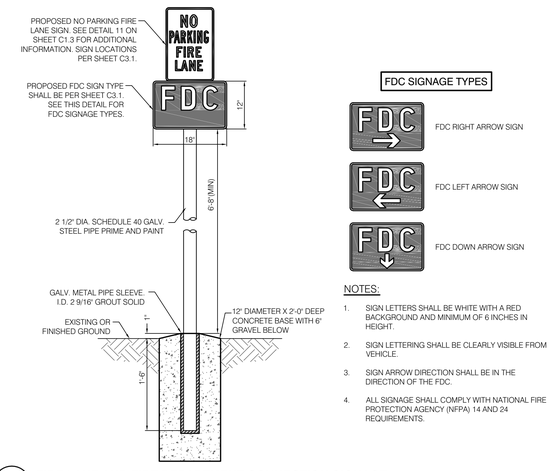

NOTES:
1. SIGN LETTERS SHALL BE WHITE WITH A RED BACKGROUND AND MINIMUM OF 6 INCHES IN HEIGHT.
2. SIGN LETTERING SHALL BE CLEARLY VISIBLE FROM VEHICLE.
3. SIGN ARROW DIRECTION SHALL BE IN THE DIRECTION OF THE FDC.
4. ALL SIGNAGE SHALL COMPLY WITH NATIONAL FIRE PROTECTION AGENCY (NFPA) 14 AND 24 REQUIREMENTS.

6 FIRE LANE AND FIRE DEPARTMENT CONNECTION SIGNAGE
NTS

*NOTE
1. REFERENCE CALIFORNIA BUILDING CODE SECTIONS 11B-406 AND 11B-705 FOR ADDITIONAL DETAILS.
2. SUBGRADE PREPARATION REQUIREMENTS PER GEOTECHNICAL REPORT AND PROJECT SPECIFICATIONS.
3. SEE STRUCTURAL SECTIONS AND SPECIFIC RAMP DIMENSIONS ON DIMENSION AND PAVING PLAN; SHEET C3.1.
4. SEE GRADING AND DRAINAGE PLANS FOR GRADING DETAILS; SHEETS C4.1.

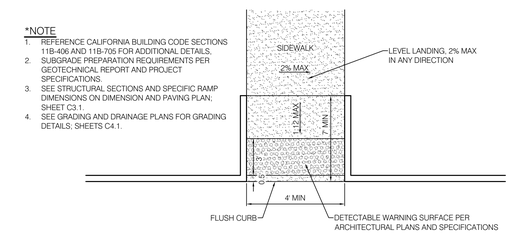

7 ACCESSIBLE RAMP
NTS

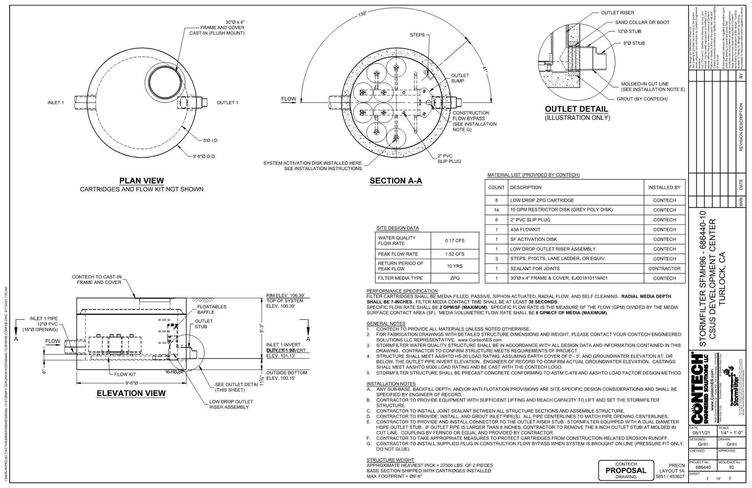

8 CONTECH STORMFILTER MANHOLE
NTS

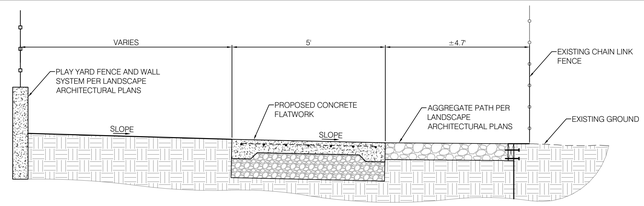

9 EAST CROSS SECTION
NTS

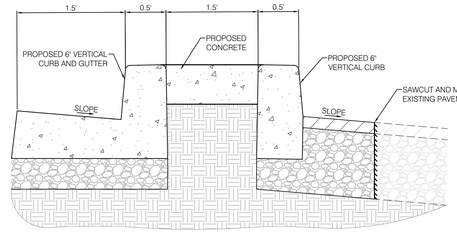

10 NORTH CROSS SECTION
NTS

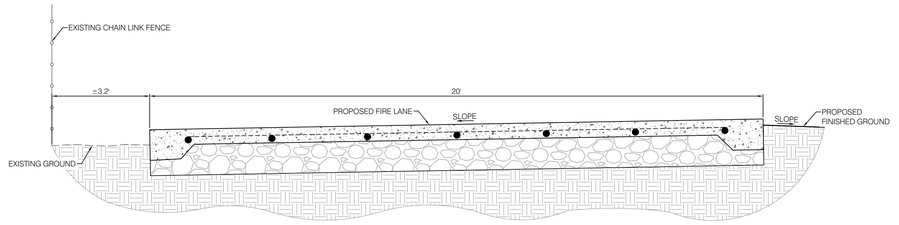

11 WEST CROSS SECTION
NTS

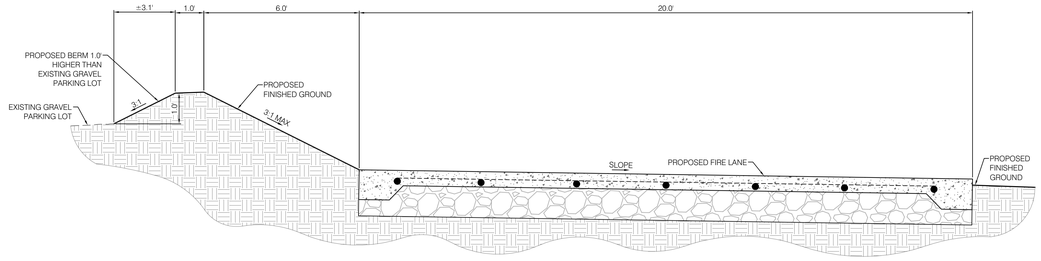

12 SOUTH CROSS SECTION
NTS

COPYRIGHT 2021 NORTHSTAR ENGINEERING GROUP, INC

PLOTTED: 10/6/2021 16:06 PLOTTED BY: Cecilia
DRAWING: P:\20-21\20.12\DO\Development - Civil\Civil\D2\Plans\C1.4 - Details.dwg

CALL BEFORE YOU DIG 800-227-2600

APPROVED
DIV. OF THE STATE ARCHITECT
APP: 02-119316 INC:
REVIEWED FOR
SS☐ FLS☐ ACS☑
DATE: 03/24/2022

Division of the State Archi

Office of the State Fire Marshal

OFFICE OF THE STATE FIRE MARSHAL
APPROVED FIRE AND PANIC ONLY
03/14/22
21-0498
Approval of this plan does not authorize or approve any omission or deviation from applicable regulations. Final approval is subject to field inspection. One set of approved plans shall be available on the project site at all times.

CSUS CHILD DEVELOPMENT CENTER

CALIFORNIA STATE UNIVERSITY, STANISLAUS
ONE UNIVERSITY CIRCLE
TURLOCK, CA 95382

ehdd.

PIER 1, BAY 2
THE EMBARCADERO
SAN FRANCISCO, CA 94111

INFO@EHDD.COM
+1 415-285-9193

Consultant

NorthStar Engineering Group, Inc.
* CIVIL ENGINEERING * SURVEYING * PLANNING *
620 12th Street Modesto, CA 95354
(209) 524-3525 Phone (209) 524-3526 Fax

Stamp

REGISTERED PROFESSIONAL ENGINEER CECILIA R. BOLIVAR No. C85547 12/06/2021 CIVIL STATE OF CALIFORNIA

Printing	Date
95% CONSTRUCTION DOCUMENTS	06.25.2021
PERMIT SET	08.16.2021
PERMIT SET - DSA V2	12.15.2021
PERMIT SET - SFM	12.21.2021

Revisions and Description	Date

Scale
As Shown

Drawn by
BEC

EHDD Job Number
20020

Sheet Title
DETAILS AND CROSS SECTIONS

Sheet Number
C1.4 **V3**

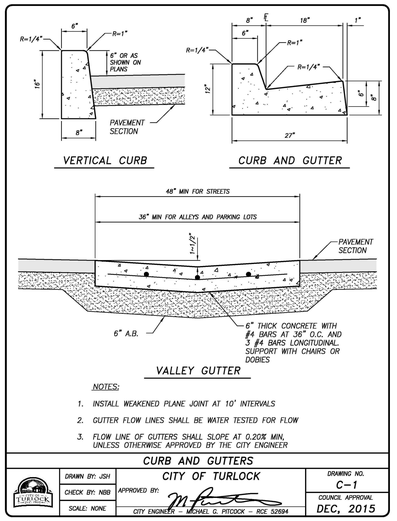

1 CITY OF TURLOCK CURB AND GUTTERS
NTS

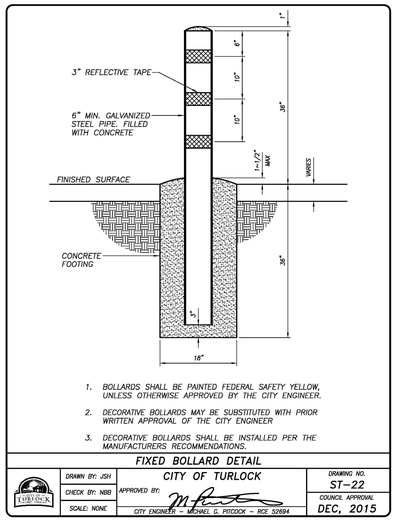

4 CITY OF TURLOCK FIXED BOLLARD
NTS

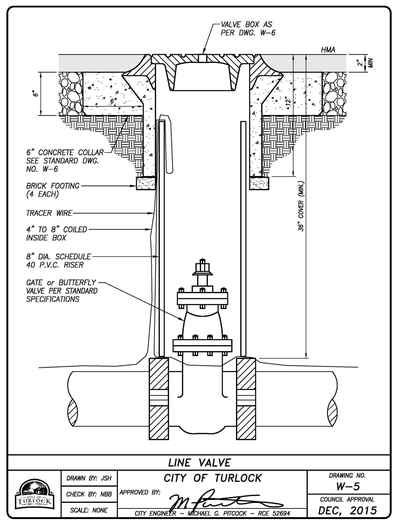

7 CITY OF TURLOCK LINE VALVE
NTS

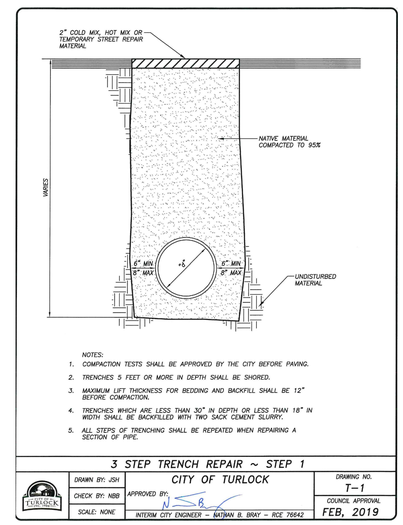

10 CITY OF TURLOCK TRENCH REPAIR STEP 1
NTS

2 CITY OF TURLOCK CROSS WALK LAYOUT
NTS

5 CITY OF TURLOCK FIRE HYDRANT ASSEMBLY
NTS

8 CITY OF TURLOCK BACKFLOW PREVENTER ASSEMBLY
NTS

11 CITY OF TURLOCK TRENCH REPAIR STEP 2
NTS

3 CITY OF TURLOCK STANDARD MANHOLE
NTS

6 CITY OF TURLOCK THRUST BLOCKS
NTS

9 CITY OF TURLOCK FIRE-LINE INSTALLATION
NTS

12 CITY OF TURLOCK TRENCH REPAIR STEP 3
NTS

PLOTTED: 12/6/2021 16:06 PLOTTED BY: CadNet
DWGNAME: T:\20-21\20-20\Cover Sheet\Development - CurrDraw\H2O Prep\S1.5 - Details.dwg

COPYRIGHT 2021 NORTHSTAR ENGINEERING GROUP, INC

CALL BEFORE YOU DIG 800-227-2600

Division of the State Archi

APPROVED
DIV. OF THE STATE ARCHITECT
APP: 02-119316 INC:
REVIEWED FOR
SS☐ FLS☐ ACS☑
DATE: 03/24/2022

Office of the State Fire Marshal

OFFICE OF THE STATE FIRE MARSHAL
APPROVED FIRE AND PANIC ONLY
03/14/22
21-0498
Approval of this plan does not authorize or approve any omission or deviation from applicable regulations. Final approval is subject to field inspection. One set of approved plans shall be available on the project site at all times.

CSUS CHILD DEVELOPMENT CENTER

CALIFORNIA STATE UNIVERSITY, STANISLAUS
ONE UNIVERSITY CIRCLE
TURLOCK, CA 95382

ehdd.
PIER 1, BAY 2
THE EMBARCADERO
SAN FRANCISCO, CA 94111
INFO@EHDD.COM
+1 415-285-9193

Consultant

NorthStar Engineering Group, Inc.
• CIVIL ENGINEERING • SURVEYING • PLANNING •
620 12th Street Modesto, CA 95354
(209) 524-3525 Phone (209) 524-3526 Fax

Stamp

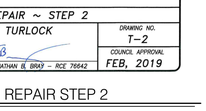

Printing	Date
95% CONSTRUCTION DOCUMENTS	06.25.2021
PERMIT SET	08.16.2021
PERMIT SET - DSA V2	12.15.2021
PERMIT SET - SFM	12.21.2021

Revisions and Description	Date

Scale
As Shown

Drawn by
BEC

EHDD Job Number
20020

Sheet Title
DETAILS AND CROSS SECTIONS

Sheet Number
C1.5 **V3**

NOTE:
1. SEE ARCHITECTURAL PLANS FOR ADDITIONAL DETAILS AND SPECIFICATIONS, INCLUDING HANDRAILS IF APPLICABLE

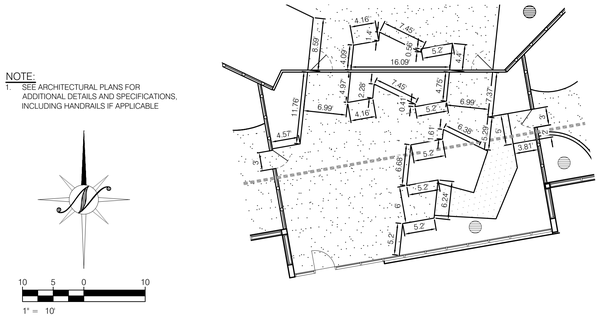

1 DIMENSION DETAIL

NOTE:
1. SEE ARCHITECTURAL PLANS FOR ADDITIONAL DETAILS AND SPECIFICATIONS, INCLUDING HANDRAILS IF APPLICABLE

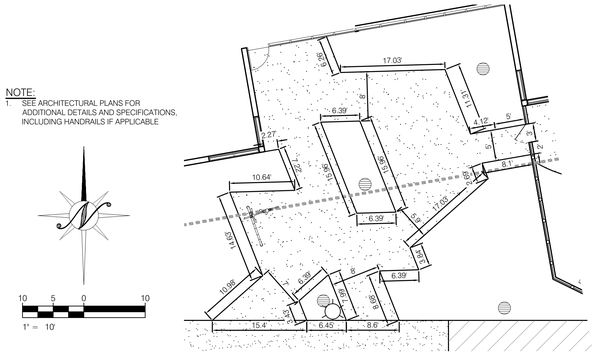

2 DIMENSION DETAIL

NOTE:
1. SEE ARCHITECTURAL PLANS FOR ADDITIONAL DETAILS AND SPECIFICATIONS, INCLUDING HANDRAILS IF APPLICABLE

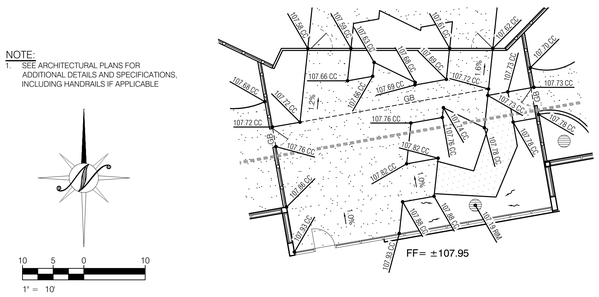

3 GRADING DETAIL

NOTE:
1. SEE ARCHITECTURAL PLANS FOR ADDITIONAL DETAILS AND SPECIFICATIONS, INCLUDING HANDRAILS IF APPLICABLE

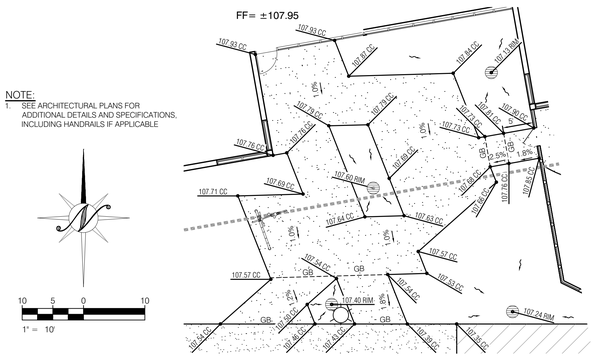

4 GRADING DETAIL

NOTE:
1. SEE ARCHITECTURAL PLANS FOR ADDITIONAL DETAILS AND SPECIFICATIONS, INCLUDING HANDRAILS IF APPLICABLE

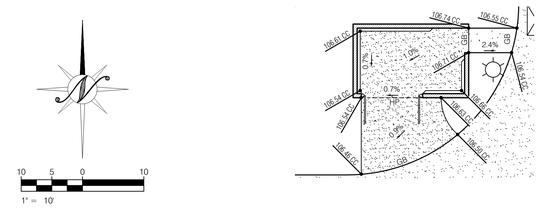

5 GRADING DETAIL

Division of the State Archi

APPROVED
DIV. OF THE STATE ARCHITECT
APP: 02-119316 INC:
REVIEWED FOR
SS☐ FLS☐ ACS☑
DATE: 03/24/2022

Office of the State Fire Marshal

OFFICE OF THE STATE FIRE MARSHAL
APPROVED FIRE AND PANIC ONLY
03/14/22
21-0498
Approval of this plan does not authorize or approve any omission or deviation from applicable regulations. Final approval is subject to field inspection. One set of approved plans shall be available on the project site at all times.

CSUS CHILD DEVELOPMENT CENTER

CALIFORNIA STATE UNIVERSITY, STANISLAUS
ONE UNIVERSITY CIRCLE
TURLOCK, CA 95382

ehdd.

PIER 1, BAY 2
THE EMBARCADERO
SAN FRANCISCO, CA 94111

INFO@EHDD.COM
+1 415-285-9193

Consultant

NorthStar Engineering Group, Inc.
* CIVIL ENGINEERING * SURVEYING * PLANNING *
620 12th Street Modesto, CA 95354
(209) 524-3525 Phone (209) 524-3526 Fax

Stamp

REGISTERED PROFESSIONAL ENGINEER
CASEY R. WALKER
No. C89547
12/06/2021
CIVIL
STATE OF CALIFORNIA

Printing	Date
95% CONSTRUCTION DOCUMENTS	06.25.2021
PERMIT SET	08.16.2021
PERMIT SET - DSA V2	12.15.2021
PERMIT SET - SFM	12.21.2021

Revisions and Description	Date

Scale
As Shown

Drawn by
BEC

EHDD Job Number
20020

Sheet Title
DETAILS AND CROSS SECTIONS

Sheet Number
C1.6 V3

COPYRIGHT 2021 NORTHSTAR ENGINEERING GROUP, INC

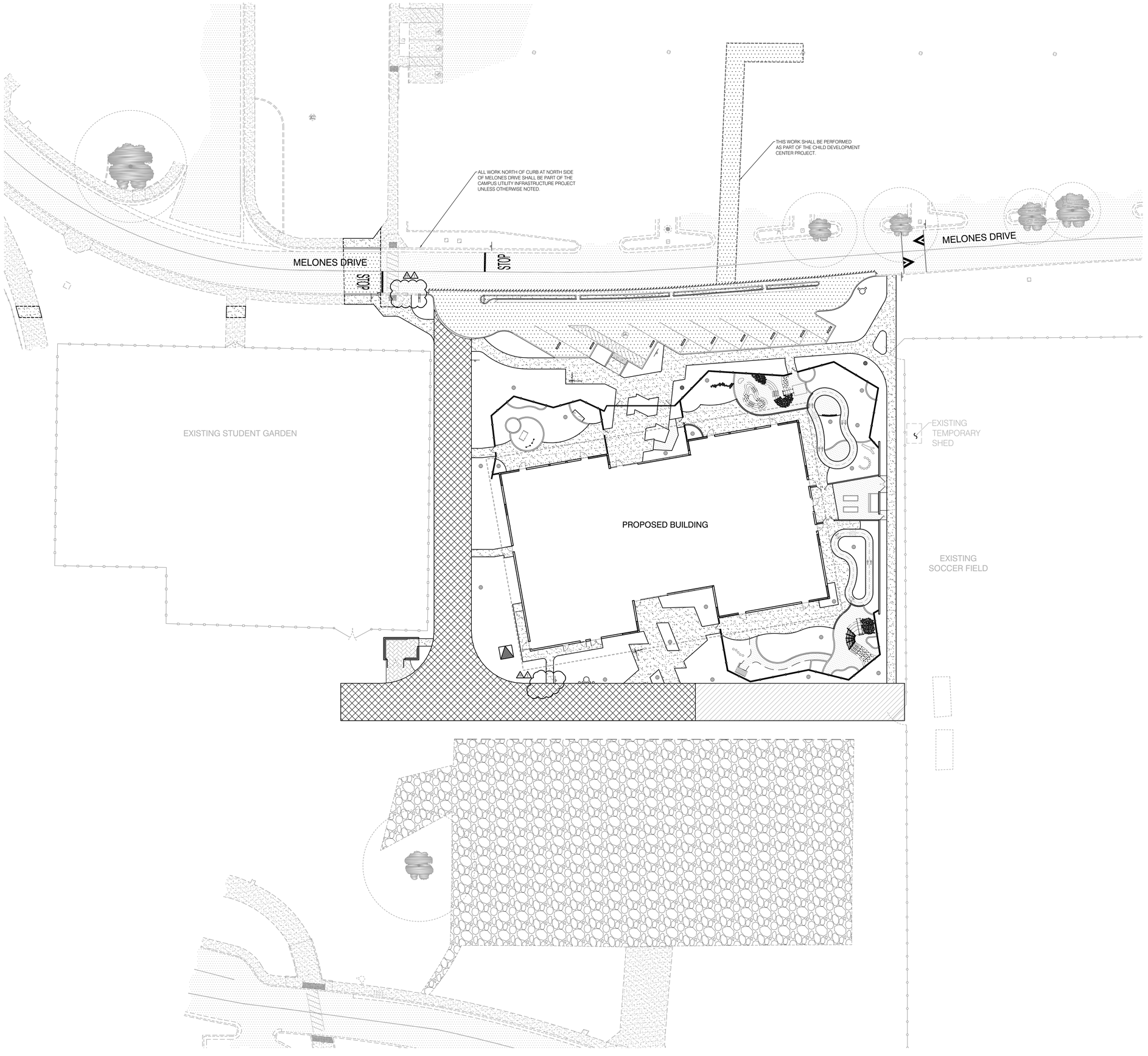

HATCH LEGEND

- EXISTING PAVEMENT
- EXISTING CONCRETE
- EXISTING GRAVEL
- PAVEMENT SECTION* - STANDARD DUTY
  TI = 6, R VALUE = 40, 3.5" AC/6" CLASS II AB/12" COMPACTED SUBGRADE (95%RC)
  SEE GEOTECHNICAL REPORT FOR ADDITIONAL RECOMMENDATIONS
- CONCRETE SECTION** - PEDESTRIAN
  4"PCC/12" COMPACTED SUBGRADE (95%RC)
  W/#4 REBAR @ 24" O.C. BOTH DIRECTIONS
  SEE GEOTECHNICAL REPORT FOR ADDITIONAL RECOMMENDATIONS
- CONCRETE SECTION** - FIRE LANE
  TI = 6.0, 6"PCC/12" COMPACTED SUBGRADE (95%RC)
  W/#4 REBAR @ 24" O.C. BOTH DIRECTIONS
  SEE GEOTECHNICAL REPORT FOR ADDITIONAL RECOMMENDATIONS
- CONCRETE SECTION** - FIRE LANE EXTENSION (ADD ALTERNATIVE)
  ASSUMED TI = 6.0, 6"PCC/12" COMPACTED SUBGRADE (95%RC)
  W/#4 REBAR @ 24" O.C. BOTH DIRECTIONS
  SEE GEOTECHNICAL REPORT FOR ADDITIONAL RECOMMENDATIONS
- IMPERVIOUS LANDSCAPE GROUND COVERING
  SEE LANDSCAPE ARCHITECTURAL PLANS FOR ADDITIONAL INFORMATION
- CONCRETE SECTION** - TRASH ENCLOSURE AND APRON
  SEE ARCHITECTURAL PLANS

*GEOTECHNICAL REPORTS AND/OR ADDENDUMS MAY EXIST, CONTRACTOR SHALL REVIEW DOCUMENTS TO CONFIRM STRUCTURAL SECTIONS.
**SEE ARCHITECTURAL PLANS FOR SCORING, CONTROL JOINTS, PATTERN, COLOR AND ADDITIONAL CONCRETE DETAILS AND SPECIFICATIONS.

COPYRIGHT 2021 NORTHSTAR ENGINEERING GROUP, INC

PLOTTED: 12/06/2021 16:07 PLOTTED BY: CeeBar
DWGNAME: T:\20-21\20-21305 Child Development - Cee\Layout\21 Plans\C1.7 - PDP.dwg

Division of the State Archi

APPROVED
DIV. OF THE STATE ARCHITECT
APP: 02-119316 INC:
REVIEWED FOR
SS☐ FLS☐ ACS☑
DATE: 03/24/2022

Office of the State Fire Marshal

OFFICE OF THE STATE FIRE MARSHAL
APPROVED FIRE AND PANIC ONLY
03/14/22
21-0498
Approval of this plan does not authorize or approve any omission or deviation from applicable regulations. Final approval is subject to field inspection. One set of approved plans shall be available on the project site at all times.

CSUS CHILD DEVELOPMENT CENTER

CALIFORNIA STATE
UNIVERSITY, STANISLAUS
ONE UNIVERSITY CIRCLE
TURLOCK, CA 95382

ehdd.

PIER 1, BAY 2
THE EMBARCADERO
SAN FRANCISCO, CA 94111

INFO@EHDD.COM
+1 415-285-9193

Consultant

NorthStar Engineering Group, Inc.
* CIVIL ENGINEERING * SURVEYING * PLANNING *
620 12th Street Modesto, CA 95354
(209) 524-3525 Phone (209) 524-3526 Fax

Stamp

REGISTERED PROFESSIONAL ENGINEER
CASEY E. WALKER
No. C89547
12/06/2021
CIVIL
STATE OF CALIFORNIA

Printing	Date
95% CONSTRUCTION DOCUMENTS	06.25.2021
PERMIT SET	08.16.2021
PERMIT SET - DSA V2	12.15.2021
PERMIT SET - SFM	12.21.2021

Revisions and Description	Date

Scale
As Shown

Drawn by
BEC

EHDD Job Number
20020

Sheet Title
PAVEMENT DELINEATION PLAN

Sheet Number
C1.7 **V3**

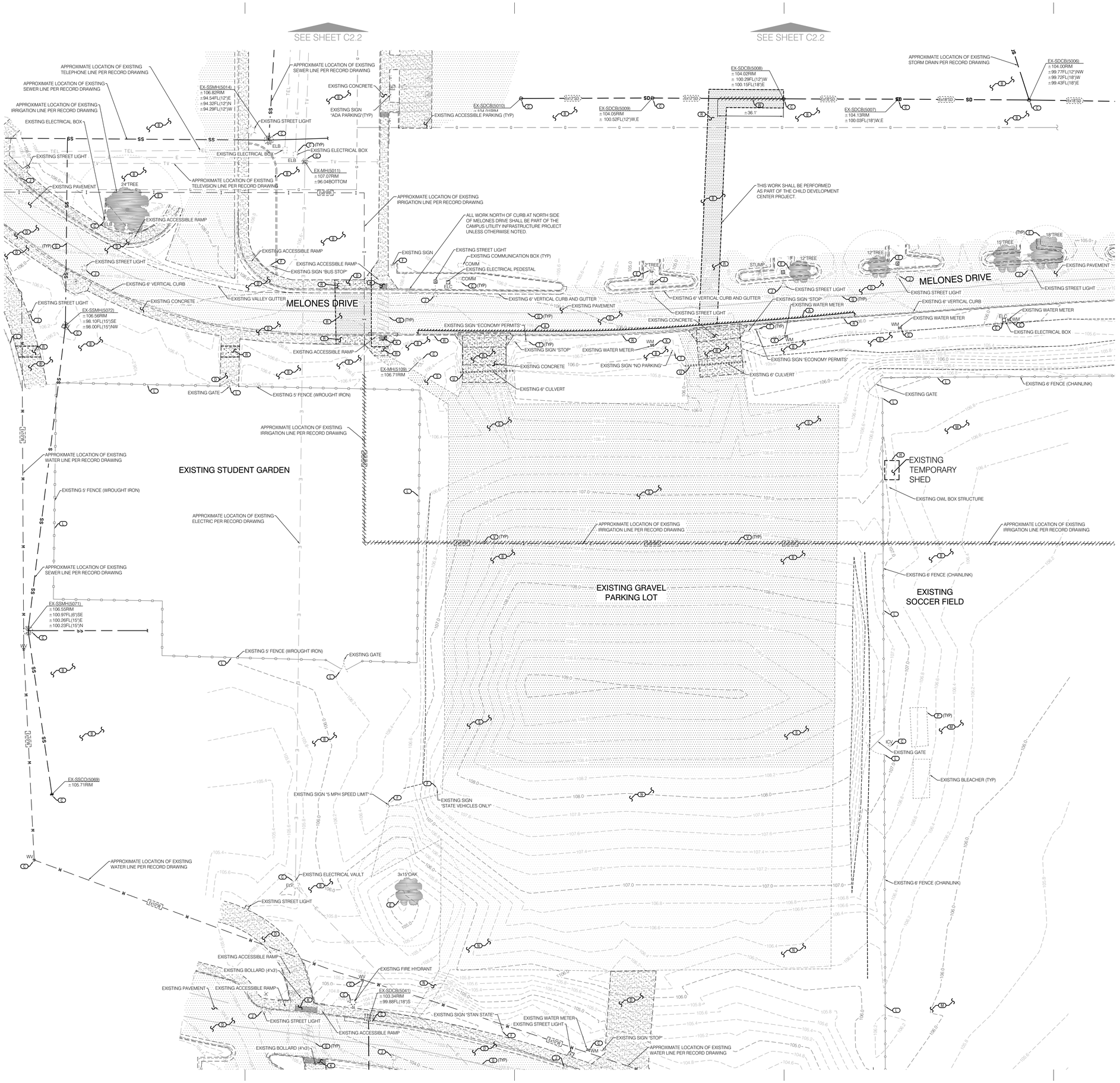

PLOTTED: 12/6/2021 16:07 PLOTTED BY: CreaNor
DWGNAME: I:\20-21\20-21005 Child Development Cam\Dwg\02 Plans\C2.1 - Topo.dwg

HATCH LEGEND

- EXISTING PAVEMENT TO REMAIN
- EXISTING PAVEMENT TO BE REMOVED
- EXISTING CONCRETE TO REMAIN
- EXISTING CONCRETE TO BE REMOVED
- EXISTING GRAVEL TO REMAIN
- EXISTING GRAVEL TO BE REMOVED
- EXISTING PIPE TO BE REMOVED

KEY NOTES

REFER TO APPLICABLE NOTES ON SHEET C1.2 AND APPLICABLE DETAILS ON SHEETS C1.3-C1.5.

A. SAWCUT AND REMOVE EXISTING PAVEMENT STRUCTURAL SECTION, CONCRETE, AND/OR CURB AS REQUIRED PER THESE PLANS. CONTRACTOR MAY NEED TO FIELD ADJUST SAWCUT LINE TO REMOVE THE CONCRETE SECTION AT THE NEAREST JOINT WHILE MAINTAINING ACCESSIBLE TRANSITION TO PROVIDE ACCESSIBILITY COMPLIANCE BASED ON FIELD CONDITIONS. SEE SAWCUT LAP JOINT DETAIL 3 ON SHEET C1.3 WHERE NEW ASPHALT IS PLACED.

B. CONTRACTOR SHALL "USE EXTREME CAUTION" THROUGHOUT THE COURSE OF CONSTRUCTION AS ADDITIONAL UNDERGROUND LINES AND STRUCTURES NOT SHOWN ON THIS PLAN MAY EXIST AND ARE NOT CLEARLY MARKED OR VISIBLE FROM THE SURFACE. ADDITIONALLY CONTRACTOR SHALL USE EXTREME CAUTION WHILE WORKING BY LOW HANGING POWER LINES. IN CONJUNCTION WITH CONTACTING USA TO LOCATE UNDERGROUND UTILITIES WITHIN THE PUBLIC RIGHT-OF-WAY IT IS HIGHLY RECOMMENDED THAT THE CONTRACTOR UTILIZE (GPR) GROUND PENETRATING RADAR UNDERGROUND SERVICES TO IDENTIFY UTILITIES THAT MAY NOT BE VISIBLE FROM THE SURFACE.

C. "USE EXTREME CAUTION" CONTRACTOR SHALL PROTECT EXISTING STRUCTURES, OVERHEAD LINES AND UNDERGROUND UTILITIES THROUGHOUT THE COURSE OF CONSTRUCTION AND REPAIR/REPLACE IF DAMAGED DURING CONSTRUCTION, AT CONTRACTOR'S EXPENSE. COORDINATE WITH APPROPRIATE CONSULTANT AND/OR AGENCY FOR ANY RELOCATION OR REMOVAL. CONTRACTOR SHALL ADJUST TO PROPOSED GRADE AS NECESSARY.

D. CONTRACTOR SHALL PROTECT EXISTING CONCRETE, CURB AND/OR PAVEMENT THROUGHOUT THE COURSE OF CONSTRUCTION AND REPAIR/REPLACE IF DAMAGED DURING CONSTRUCTION, AT CONTRACTOR'S EXPENSE. SEE KEYNOTE "A" ABOVE.

E. CONTRACTOR SHALL PROTECT EXISTING TREE AND ROOTS THROUGHOUT THE COURSE OF CONSTRUCTION. EXCAVATION AND GRADING SHOULD BE KEPT TO A MINIMUM AND NOTIFY THE OWNER IMMEDIATELY SHOULD THE TREE NEED TO BE REMOVED TO COMPLETE IMPROVEMENTS.

F. CONTRACTOR SHALL PROTECT EXISTING SIGNAGE THROUGHOUT THE COURSE OF CONSTRUCTION AND REPAIR/REPLACE IF DAMAGED DURING CONSTRUCTION, AT CONTRACTOR'S EXPENSE.

G. CONTRACTOR SHALL PROTECT EXISTING STRIPING THROUGHOUT THE COURSE OF CONSTRUCTION AND REPAIR/REPLACE IF DAMAGED DURING CONSTRUCTION, AT CONTRACTOR'S EXPENSE.

H. CONTRACTOR SHALL PROTECT EXISTING TEMPORARY SHED AND ASSOCIATED STRUCTURES THROUGHOUT THE COURSE OF CONSTRUCTION AND REPAIR/REPLACE IF DAMAGED DURING CONSTRUCTION, AT CONTRACTOR'S EXPENSE.

J. CONTRACTOR SHALL PROTECT EXISTING LIGHT THROUGHOUT THE COURSE OF CONSTRUCTION AND REPAIR/REPLACE IF DAMAGED DURING CONSTRUCTION, AT CONTRACTOR'S EXPENSE.

K. CONTRACTOR SHALL PROTECT EXISTING TRUNCATED DOMES THROUGHOUT THE COURSE OF CONSTRUCTION AND REPAIR/REPLACE IF DAMAGED DURING CONSTRUCTION, AT CONTRACTOR'S EXPENSE.

L. CONTRACTOR SHALL PROTECT EXISTING FENCE AND/OR GATE THROUGHOUT THE COURSE OF CONSTRUCTION AND REPAIR/REPLACE IF DAMAGED DURING CONSTRUCTION, AT CONTRACTOR'S EXPENSE.

M. CONTRACTOR SHALL PROTECT EXISTING SOCCER FIELD THROUGHOUT THE COURSE OF CONSTRUCTION AND REPAIR/REPLACE IF DAMAGED DURING CONSTRUCTION, AT CONTRACTOR'S EXPENSE.

N. CONTRACTOR SHALL PROTECT EXISTING GRAVEL PARKING LOT THROUGHOUT THE COURSE OF CONSTRUCTION AND REPAIR/REPLACE IF DAMAGED DURING CONSTRUCTION, AT CONTRACTOR'S EXPENSE.

P. CONTRACTOR SHALL PROTECT EXISTING BLEACHERS THROUGHOUT THE COURSE OF CONSTRUCTION AND REPAIR/REPLACE IF DAMAGED DURING CONSTRUCTION, AT CONTRACTOR'S EXPENSE.

R. CONTRACTOR SHALL REMOVE EXISTING CONCRETE, CURB AND/OR PAVEMENT AS SHOWN AND DISPOSE OF OFF-SITE AT THE CONTRACTOR'S EXPENSE. CONTRACTOR MAY NEED TO FIELD ADJUST SAWCUT LINE TO REMOVE THE CONCRETE SECTION AT THE NEAREST JOINT WHILE MAINTAINING ACCESSIBLE TRANSITION TO PROVIDE ACCESSIBILITY COMPLIANCE BASED ON FIELD CONDITIONS. SEE KEYNOTE "A" ABOVE FOR ADDITIONAL INFORMATION.

S. CONTRACTOR SHALL REMOVE EXISTING GRAVEL PARKING LOT AND DISPOSE OF ON CAMPUS AT THE CONTRACTOR'S EXPENSE AT LOCATION TO BE COORDINATED WITH THE UNIVERSITY.

T. CONTRACTOR SHALL REMOVE EXISTING SIGN AND DISPOSE OF OFF-SITE AT THE CONTRACTOR'S EXPENSE.

U. CONTRACTOR SHALL REMOVE EXISTING CULVERT AND DISPOSE OF OFF-SITE AT THE CONTRACTOR'S EXPENSE.

V. APPROXIMATE LOCATION OF IRRIGATION LINE BASED ON RECORD DRAWING. CONTRACTOR SHALL VERIFY EXACT LOCATION. CONTRACTOR SHALL REMOVE AND RELOCATE ANY EXISTING IRRIGATION LINES THAT CONFLICT WITH PROPOSED IMPROVEMENTS. SEE LANDSCAPE ARCHITECTURAL PLANS FOR ADDITIONAL DETAILS.

W. APPROXIMATE LOCATION OF STORM DRAIN LINE BASED ON RECORD DRAWING. CONTRACTOR SHALL VERIFY EXACT LOCATION. CONTRACTOR SHALL REMOVE EXISTING STORM DRAIN PIPE AND DISPOSE OF OFF-SITE AT THE CONTRACTOR'S EXPENSE.

X. CONTRACTOR SHALL REMOVE EXISTING WATER METER BOX AND DISPOSE OF OFF-SITE AT THE CONTRACTOR'S EXPENSE.

COPYRIGHT 2021 NORTHSTAR ENGINEERING GROUP, INC

Division of the State Archi

APPROVED
DIV. OF THE STATE ARCHITECT
APP: 02-119316 INC:
REVIEWED FOR
SS☐ FLS☐ ACS☑
DATE: 03/24/2022

Office of the State Fire Marshal

OFFICE OF THE STATE FIRE MARSHAL
APPROVED FIRE AND PANIC ONLY
03/14/22
21-0498
Approval of this plan does not authorize or approve any omission or deviation from applicable regulations. Final approval is subject to field inspection. One set of approved plans shall be available on the project site at all times.

CSUS CHILD DEVELOPMENT CENTER

CALIFORNIA STATE
UNIVERSITY, STANISLAUS
ONE UNIVERSITY CIRCLE
TURLOCK, CA 95382

ehdd.

PIER 1, BAY 2
THE EMBARCADERO
SAN FRANCISCO, CA 94111

INFO@EHDD.COM
+1 415-285-9193

Consultant

NorthStar Engineering Group, Inc.
* CIVIL ENGINEERING * SURVEYING * PLANNING *
620 12th Street Modesto, CA 95354
(209) 524-3525 Phone (209) 524-3526 Fax

Stamp

REGISTERED PROFESSIONAL ENGINEER
CASEY E. NORTH
No. C89547
12/06/2021
CIVIL
STATE OF CALIFORNIA

Printing	Date
95% CONSTRUCTION DOCUMENTS	06.25.2021
PERMIT SET	08.16.2021
PERMIT SET - DSA V2	12.15.2021
PERMIT SET - SFM	12.21.2021

Revisions and Description	Date

Scale
As Shown

Drawn by
BEC

EHDD Job Number
20020

Sheet Title
TOPOGRAPHIC AND DEMOLITION PLAN

Sheet Number
C2.1 **V3**

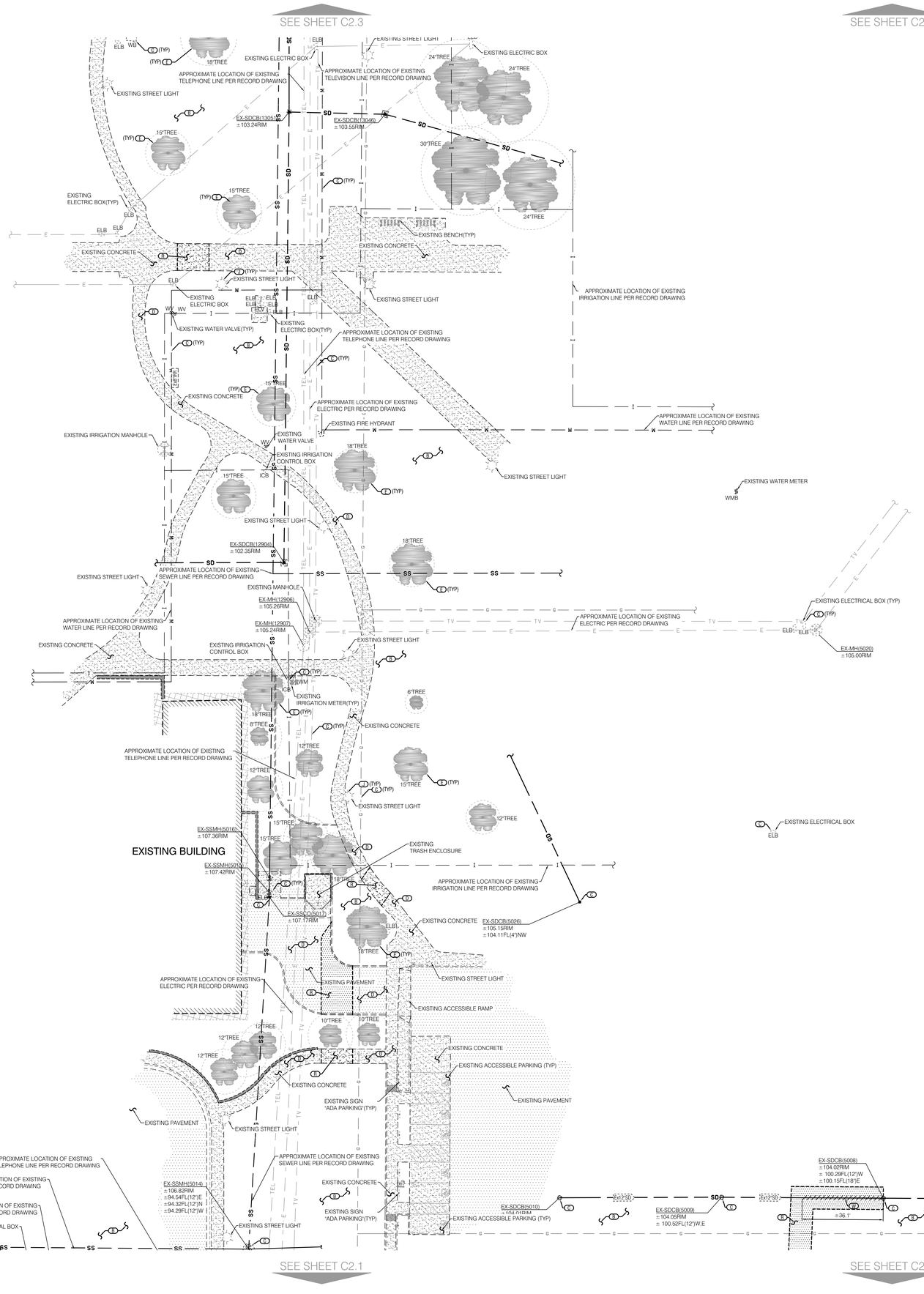

20 10 0 20

1" = 20'

CALL BEFORE YOU DIG 800-227-2600

HATCH LEGEND

- EXISTING PAVEMENT TO REMAIN
- EXISTING PAVEMENT TO BE REMOVED
- EXISTING CONCRETE TO REMAIN
- EXISTING CONCRETE TO BE REMOVED
- EXISTING GRAVEL TO REMAIN
- EXISTING GRAVEL TO BE REMOVED
- EXISTING PIPE TO BE REMOVED

KEY NOTES

REFER TO APPLICABLE NOTES ON SHEET C1.2 AND APPLICABLE DETAILS ON SHEETS C1.3-C1.5.

A SAWCUT AND REMOVE EXISTING PAVEMENT STRUCTURAL SECTION, CONCRETE, AND/OR CURB AS REQUIRED PER THESE PLANS. CONTRACTOR MAY NEED TO FIELD ADJUST SAWCUT LINE TO REMOVE THE CONCRETE SECTION AT THE NEAREST JOINT WHILE MAINTAINING ACCESSIBLE TRANSITION TO PROVIDE ACCESSIBILITY COMPLIANCE BASED ON FIELD CONDITIONS. SEE SAWCUT LAP JOINT DETAIL 3 ON SHEET C1.3 WHERE NEW ASPHALT IS PLACED.

B CONTRACTOR SHALL "USE EXTREME CAUTION" THROUGHOUT THE COURSE OF CONSTRUCTION AS ADDITIONAL UNDERGROUND LINES AND STRUCTURES NOT SHOWN ON THIS PLAN MAY EXIST AND ARE NOT CLEARLY MARKED OR VISIBLE FROM THE SURFACE. ADDITIONALLY CONTRACTOR SHALL USE EXTREME CAUTION WHILE WORKING BY LOW HANGING POWER LINES. IN CONJUNCTION WITH CONTACTING USA TO LOCATE UNDERGROUND UTILITIES WITHIN THE PUBLIC RIGHT-OF-WAY IT IS HIGHLY RECOMMENDED THAT THE CONTRACTOR UTILIZE (GPR) GROUND PENETRATING RADAR UNDERGROUND SERVICES TO IDENTIFY UTILITIES THAT MAY NOT BE VISIBLE FROM THE SURFACE.

C "USE EXTREME CAUTION" CONTRACTOR SHALL PROTECT EXISTING STRUCTURES, OVERHEAD LINES AND UNDERGROUND UTILITIES THROUGHOUT THE COURSE OF CONSTRUCTION AND REPAIR/REPLACE IF DAMAGED DURING CONSTRUCTION, AT CONTRACTOR'S EXPENSE. COORDINATE WITH APPROPRIATE CONSULTANT AND/OR AGENCY FOR ANY RELOCATION OR REMOVAL. CONTRACTOR SHALL ADJUST TO PROPOSED GRADE AS NECESSARY.

D CONTRACTOR SHALL PROTECT EXISTING CONCRETE, CURB AND/OR PAVEMENT THROUGHOUT THE COURSE OF CONSTRUCTION AND REPAIR/REPLACE IF DAMAGED DURING CONSTRUCTION, AT CONTRACTOR'S EXPENSE. SEE KEYNOTE "A" ABOVE.

E CONTRACTOR SHALL PROTECT EXISTING TREE AND ROOTS THROUGHOUT THE COURSE OF CONSTRUCTION. EXCAVATION AND GRADING SHOULD BE KEPT TO A MINIMUM AND NOTIFY THE OWNER IMMEDIATELY SHOULD THE TREE NEED TO BE REMOVED TO COMPLETE IMPROVEMENTS.

F CONTRACTOR SHALL PROTECT EXISTING SIGNAGE THROUGHOUT THE COURSE OF CONSTRUCTION AND REPAIR/REPLACE IF DAMAGED DURING CONSTRUCTION, AT CONTRACTOR'S EXPENSE.

G CONTRACTOR SHALL PROTECT EXISTING STRIPING THROUGHOUT THE COURSE OF CONSTRUCTION AND REPAIR/REPLACE IF DAMAGED DURING CONSTRUCTION, AT CONTRACTOR'S EXPENSE.

H CONTRACTOR SHALL PROTECT EXISTING TEMPORARY SHED AND ASSOCIATED STRUCTURES THROUGHOUT THE COURSE OF CONSTRUCTION AND REPAIR/REPLACE IF DAMAGED DURING CONSTRUCTION, AT CONTRACTOR'S EXPENSE.

I CONTRACTOR SHALL PROTECT EXISTING LIGHT THROUGHOUT THE COURSE OF CONSTRUCTION AND REPAIR/REPLACE IF DAMAGED DURING CONSTRUCTION, AT CONTRACTOR'S EXPENSE.

J CONTRACTOR SHALL PROTECT EXISTING TRUNCATED DOMES THROUGHOUT THE COURSE OF CONSTRUCTION AND REPAIR/REPLACE IF DAMAGED DURING CONSTRUCTION, AT CONTRACTOR'S EXPENSE.

K CONTRACTOR SHALL PROTECT EXISTING FENCE AND/OR GATE THROUGHOUT THE COURSE OF CONSTRUCTION AND REPAIR/REPLACE IF DAMAGED DURING CONSTRUCTION, AT CONTRACTOR'S EXPENSE.

M CONTRACTOR SHALL PROTECT EXISTING SOCCER FIELD THROUGHOUT THE COURSE OF CONSTRUCTION AND REPAIR/REPLACE IF DAMAGED DURING CONSTRUCTION, AT CONTRACTOR'S EXPENSE.

N CONTRACTOR SHALL PROTECT EXISTING GRAVEL PARKING LOT THROUGHOUT THE COURSE OF CONSTRUCTION AND REPAIR/REPLACE IF DAMAGED DURING CONSTRUCTION, AT CONTRACTOR'S EXPENSE.

P CONTRACTOR SHALL PROTECT EXISTING BLEACHERS THROUGHOUT THE COURSE OF CONSTRUCTION AND REPAIR/REPLACE IF DAMAGED DURING CONSTRUCTION, AT CONTRACTOR'S EXPENSE.

Q CONTRACTOR SHALL REMOVE EXISTING CONCRETE, CURB AND/OR PAVEMENT AS SHOWN AND DISPOSE OF OFF-SITE AT THE CONTRACTOR'S EXPENSE. CONTRACTOR MAY NEED TO FIELD ADJUST SAWCUT LINE TO REMOVE THE CONCRETE SECTION AT THE NEAREST JOINT WHILE MAINTAINING ACCESSIBLE TRANSITION TO PROVIDE ACCESSIBILITY COMPLIANCE BASED ON FIELD CONDITIONS. SEE KEYNOTE "A" ABOVE FOR ADDITIONAL INFORMATION.

R CONTRACTOR SHALL REMOVE EXISTING GRAVEL PARKING LOT AND DISPOSE OF ON CAMPUS AT THE CONTRACTOR'S EXPENSE AT LOCATION TO BE COORDINATED WITH THE UNIVERSITY.

S CONTRACTOR SHALL REMOVE EXISTING SIGN AND DISPOSE OF OFF-SITE AT THE CONTRACTOR'S EXPENSE.

U CONTRACTOR SHALL REMOVE EXISTING CULVERT AND DISPOSE OF OFF-SITE AT THE CONTRACTOR'S EXPENSE.

V APPROXIMATE LOCATION OF IRRIGATION LINE BASED ON RECORD DRAWING. CONTRACTOR SHALL VERIFY EXACT LOCATION. CONTRACTOR SHALL REMOVE AND RELOCATE ANY EXISTING IRRIGATION LINES THAT CONFLICT WITH PROPOSED IMPROVEMENTS. SEE LANDSCAPE ARCHITECTURAL PLANS FOR ADDITIONAL DETAILS.

W APPROXIMATE LOCATION OF STORM DRAIN LINE BASED ON RECORD DRAWING. CONTRACTOR SHALL VERIFY EXACT LOCATION. CONTRACTOR SHALL REMOVE EXISTING STORM DRAIN PIPE AND DISPOSE OF OFF-SITE AT THE CONTRACTOR'S EXPENSE.

X CONTRACTOR SHALL REMOVE EXISTING WATER METER BOX AND DISPOSE OF OFF-SITE AT THE CONTRACTOR'S EXPENSE.

COPYRIGHT 2021 NORTHSTAR ENGINEERING GROUP, INC

Division of the State Archi

APPROVED
DIV. OF THE STATE ARCHITECT
APP: 02-119316 INC:
REVIEWED FOR
SS☐ FLS☐ ACS☑
DATE: 03/24/2022

Office of the State Fire Marshal

OFFICE OF THE STATE FIRE MARSHAL
APPROVED FIRE AND PANIC ONLY
03/14/22
21-0498
Approval of this plan does not authorize or approve any omission or deviation from applicable regulations. Final approval is subject to field inspection. One set of approved plans shall be available on the project site at all times.

CSUS CHILD DEVELOPMENT CENTER

CALIFORNIA STATE
UNIVERSITY, STANISLAUS
ONE UNIVERSITY CIRCLE
TURLOCK, CA 95382

ehdd.

PIER 1, BAY 2
THE EMBARCADERO
SAN FRANCISCO, CA 94111

INFO@EHDD.COM
+1 415-285-9193

Consultant

NorthStar Engineering Group, Inc.
* CIVIL ENGINEERING * SURVEYING * PLANNING *
620 12th Street Modesto, CA 95354
(209) 524-3525 Phone (209) 524-3526 Fax

Stamp

REGISTERED PROFESSIONAL ENGINEER
CALVIN R. WITTMAYER
No. C89547
12/06/2021
CIVIL
STATE OF CALIFORNIA

Printing	Date
95% CONSTRUCTION DOCUMENTS	06.25.2021
PERMIT SET	08.16.2021
PERMIT SET - DSA V2	12.15.2021
PERMIT SET - SFM	12.21.2021

Revisions and Description	Date

Scale
As Shown

Drawn by
BEC

EHDD Job Number
20020

Sheet Title
TOPOGRAPHIC AND DEMOLITION PLAN

Sheet Number
C2.2 **V3**

PLOTTED: 12/6/2021 8:36 PLOTTED BY: Cadine
DWG/NAME: P:\3-01-01 CSUS Child Development - Cad\Cad\C2\Plan\C2.2 - Topo.dwg

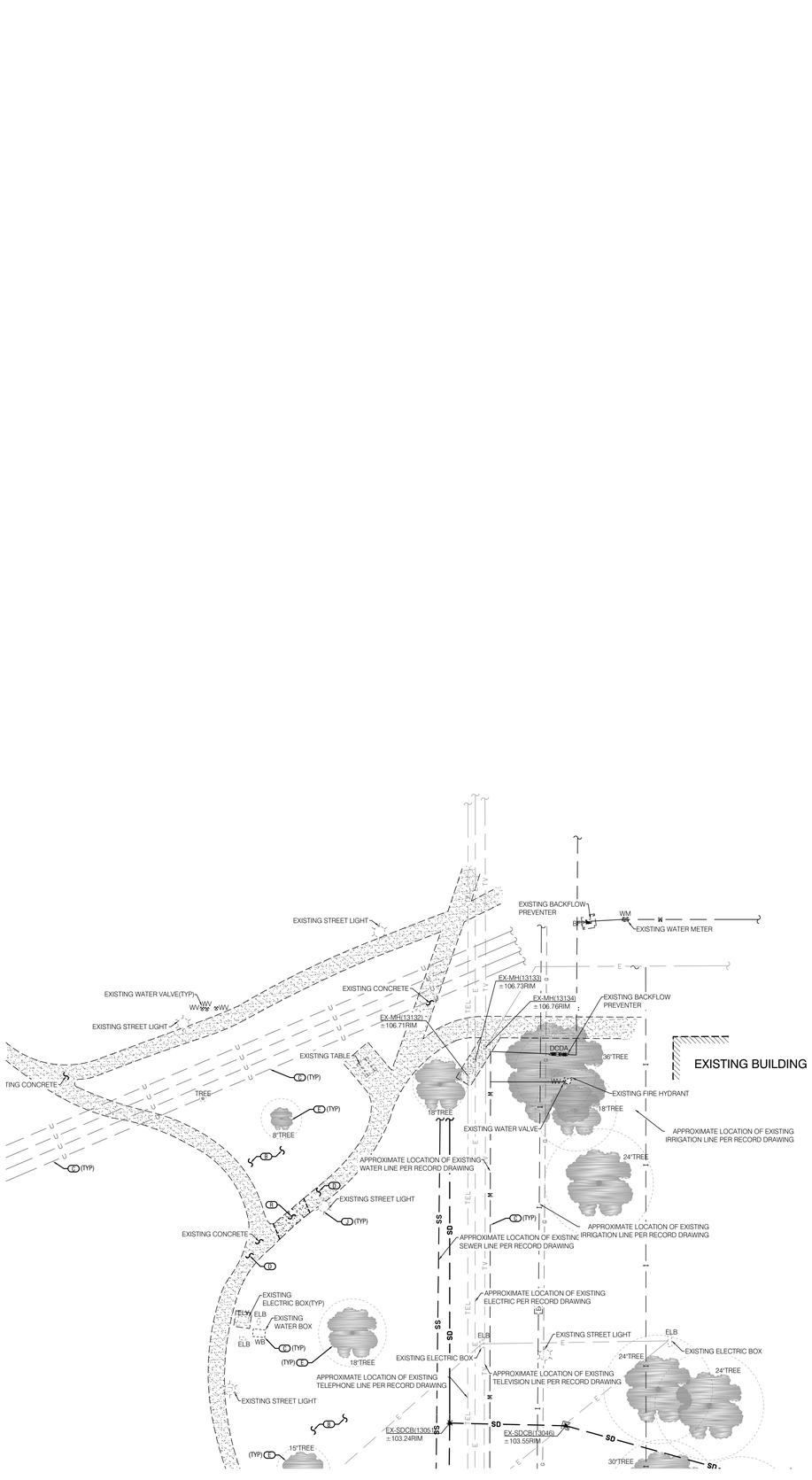

SEE SHEET C2.2

PLOTTED: 12/06/2021 16:08 PLOTTED BY: Keither
DWGNAME: T:\20120\CSUS Child Development - Civil\Civil\C3 Plans\C2.3 - Topo.dwg

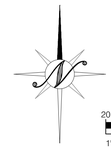

HATCH LEGEND

EXISTING PAVEMENT TO REMAIN	EXISTING PAVEMENT TO BE REMOVED
EXISTING CONCRETE TO REMAIN	EXISTING CONCRETE TO BE REMOVED
EXISTING GRAVEL TO REMAIN	EXISTING GRAVEL TO BE REMOVED
	EXISTING PIPE TO BE REMOVED

KEY NOTES

REFER TO APPLICABLE NOTES ON SHEET C1.2 AND APPLICABLE DETAILS ON SHEETS C1.3-C1.5.

1. SAWCUT AND REMOVE EXISTING PAVEMENT STRUCTURAL SECTION, CONCRETE, AND/OR CURB AS REQUIRED PER THESE PLANS. CONTRACTOR MAY NEED TO FIELD ADJUST SAWCUT LINE TO REMOVE THE CONCRETE SECTION AT THE NEAREST JOINT WHILE MAINTAINING ACCESSIBLE TRANSITION TO PROVIDE ACCESSIBILITY COMPLIANCE BASED ON FIELD CONDITIONS. SEE SAWCUT LAP JOINT DETAIL 3 ON SHEET C1.3 WHERE NEW ASPHALT IS PLACED.
2. CONTRACTOR SHALL "USE EXTREME CAUTION" THROUGHOUT THE COURSE OF CONSTRUCTION AS ADDITIONAL UNDERGROUND LINES AND STRUCTURES NOT SHOWN ON THIS PLAN MAY EXIST AND ARE NOT CLEARLY MARKED OR VISIBLE FROM THE SURFACE. ADDITIONALLY CONTRACTOR SHALL USE EXTREME CAUTION WHILE WORKING BY LOW HANGING POWER LINES. IN CONJUNCTION WITH CONTACTING USA TO LOCATE UNDERGROUND UTILITIES WITHIN THE THE PUBLIC RIGHT-OF-WAY IT IS HIGHLY RECOMMENDED THAT THE CONTRACTOR UTILIZE (GPR) GROUND PENETRATING RADAR UNDERGROUND SERVICES TO IDENTIFY UTILITIES THAT MAY NOT BE VISIBLE FROM THE SURFACE.
3. "USE EXTREME CAUTION" CONTRACTOR SHALL PROTECT EXISTING STRUCTURES, OVERHEAD LINES AND UNDERGROUND UTILITIES THROUGHOUT THE COURSE OF CONSTRUCTION AND REPAIR/REPLACE IF DAMAGED DURING CONSTRUCTION, AT CONTRACTOR'S EXPENSE. COORDINATE WITH APPROPRIATE CONSULTANT AND/OR AGENCY FOR ANY RELOCATION OR REMOVAL, CONTRACTOR SHALL ADJUST TO PROPOSED GRADE AS NECESSARY.
4. CONTRACTOR SHALL PROTECT EXISTING CONCRETE, CURB AND/OR PAVEMENT THROUGHOUT THE COURSE OF CONSTRUCTION AND REPAIR/REPLACE IF DAMAGED DURING CONSTRUCTION, AT CONTRACTOR'S EXPENSE, SEE KEYNOTE "A" ABOVE.
5. CONTRACTOR SHALL PROTECT EXISTING TREE AND ROOTS THROUGHOUT THE COURSE OF CONSTRUCTION. EXCAVATION AND GRADING SHOULD BE KEPT TO A MINIMUM AND NOTIFY THE OWNER IMMEDIATELY SHOULD THE TREE NEED TO BE REMOVED TO COMPLETE IMPROVEMENTS.
6. CONTRACTOR SHALL PROTECT EXISTING SIGNAGE THROUGHOUT THE COURSE OF CONSTRUCTION AND REPAIR/REPLACE IF DAMAGED DURING CONSTRUCTION, AT CONTRACTOR'S EXPENSE.
7. CONTRACTOR SHALL PROTECT EXISTING STRIPING THROUGHOUT THE COURSE OF CONSTRUCTION AND REPAIR/REPLACE IF DAMAGED DURING CONSTRUCTION, AT CONTRACTOR'S EXPENSE.
8. CONTRACTOR SHALL PROTECT EXISTING TEMPORARY SHED AND ASSOCIATED STRUCTURES THROUGHOUT THE COURSE OF CONSTRUCTION AND REPAIR/REPLACE IF DAMAGED DURING CONSTRUCTION, AT CONTRACTOR'S EXPENSE.
9. CONTRACTOR SHALL PROTECT EXISTING LIGHT THROUGHOUT THE COURSE OF CONSTRUCTION AND REPAIR/REPLACE IF DAMAGED DURING CONSTRUCTION, AT CONTRACTOR'S EXPENSE.
10. CONTRACTOR SHALL PROTECT EXISTING TRUNCATED DOMES THROUGHOUT THE COURSE OF CONSTRUCTION AND REPAIR/REPLACE IF DAMAGED DURING CONSTRUCTION, AT CONTRACTOR'S EXPENSE.
11. CONTRACTOR SHALL PROTECT EXISTING FENCE AND/OR GATE THROUGHOUT THE COURSE OF CONSTRUCTION AND REPAIR/REPLACE IF DAMAGED DURING CONSTRUCTION, AT CONTRACTOR'S EXPENSE.
12. CONTRACTOR SHALL PROTECT EXISTING SOCCER FIELD THROUGHOUT THE COURSE OF CONSTRUCTION AND REPAIR/REPLACE IF DAMAGED DURING CONSTRUCTION, AT CONTRACTOR'S EXPENSE.
13. CONTRACTOR SHALL PROTECT EXISTING GRAVEL PARKING LOT THROUGHOUT THE COURSE OF CONSTRUCTION AND REPAIR/REPLACE IF DAMAGED DURING CONSTRUCTION, AT CONTRACTOR'S EXPENSE.
14. CONTRACTOR SHALL PROTECT EXISTING BLEACHERS THROUGHOUT THE COURSE OF CONSTRUCTION AND REPAIR/REPLACE IF DAMAGED DURING CONSTRUCTION, AT CONTRACTOR'S EXPENSE.
15. CONTRACTOR SHALL REMOVE EXISTING CONCRETE, CURB AND/OR PAVEMENT AS SHOWN AND DISPOSE OF OFF-SITE AT THE CONTRACTOR'S EXPENSE. CONTRACTOR MAY NEED TO FIELD ADJUST SAWCUT LINE TO REMOVE THE CONCRETE SECTION AT THE NEAREST JOINT WHILE MAINTAINING ACCESSIBLE TRANSITION TO PROVIDE ACCESSIBILITY COMPLIANCE BASED ON FIELD CONDITIONS. SEE KEYNOTE "A" ABOVE FOR ADDITIONAL INFORMATION.
16. CONTRACTOR SHALL REMOVE EXISTING GRAVEL PARKING LOT AND DISPOSE OF ON CAMPUS AT THE CONTRACTOR'S EXPENSE AT LOCATION TO BE COORDINATED WITH THE UNIVERSITY.
17. CONTRACTOR SHALL REMOVE EXISTING SIGN AND DISPOSE OF OFF-SITE AT THE CONTRACTOR'S EXPENSE.
18. CONTRACTOR SHALL REMOVE EXISTING CULVERT AND DISPOSE OF OFF-SITE AT THE CONTRACTOR'S EXPENSE.
19. APPROXIMATE LOCATION OF IRRIGATION LINE BASED ON RECORD DRAWING. CONTRACTOR SHALL VERIFY EXACT LOCATION. CONTRACTOR SHALL REMOVE AND RELOCATE ANY EXISTING IRRIGATION LINES THAT CONFLICT WITH PROPOSED IMPROVEMENTS. SEE LANDSCAPE ARCHITECTURAL PLANS FOR ADDITIONAL DETAILS.
20. APPROXIMATE LOCATION OF STORM DRAIN LINE BASED ON RECORD DRAWING. CONTRACTOR SHALL VERIFY EXACT LOCATION. CONTRACTOR SHALL REMOVE EXISTING STORM DRAIN PIPE AND DISPOSE OF OFF-SITE AT THE CONTRACTOR'S EXPENSE.
21. CONTRACTOR SHALL REMOVE EXISTING WATER METER BOX AND DISPOSE OF OFF-SITE AT THE CONTRACTOR'S EXPENSE.

COPYRIGHT 2021 NORTHSTAR ENGINEERING GROUP, INC

Division of the State Archi

APPROVED
DIV. OF THE STATE ARCHITECT
APP: 02-119316 INC:
REVIEWED FOR
SS☐ FLS☐ ACS☑
DATE: 03/24/2022

Office of the State Fire Marshal

OFFICE OF THE STATE FIRE MARSHAL
APPROVED FIRE AND PANIC ONLY
03/14/22
21-0498
Approval of this plan does not authorize or approve any omission or deviation from applicable regulations. Final approval is subject to field inspection. One set of approved plans shall be available on the project site at all times.

CSUS CHILD DEVELOPMENT CENTER

CALIFORNIA STATE
UNIVERSITY, STANISLAUS
ONE UNIVERSITY CIRCLE
TURLOCK, CA 95382

ehdd.

PIER 1, BAY 2
THE EMBARCADERO
SAN FRANCISCO, CA 94111

INFO@EHDD.COM
+1 415-285-9193

Consultant

NorthStar
Engineering Group, Inc.
* CIVIL ENGINEERING * SURVEYING * PLANNING *
620 12th Street Modesto, CA 95354
(209) 524-3525 Phone (209) 524-3526 Fax

Stamp

REGISTERED PROFESSIONAL ENGINEER
BRETT R. WALKER
No. C89547
12/06/2021
CIVIL
STATE OF CALIFORNIA

Printing	Date
95% CONSTRUCTION DOCUMENTS	06.25.2021
PERMIT SET	08.16.2021
PERMIT SET - DSA V2	12.15.2021
PERMIT SET - SFM	12.21.2021

Revisions and Description	Date

Scale
As Shown

Drawn by
BEC

EHDD Job Number
20020

Sheet Title
TOPOGRAPHIC AND DEMOLITION PLAN

Sheet Number
C2.3 **V3**

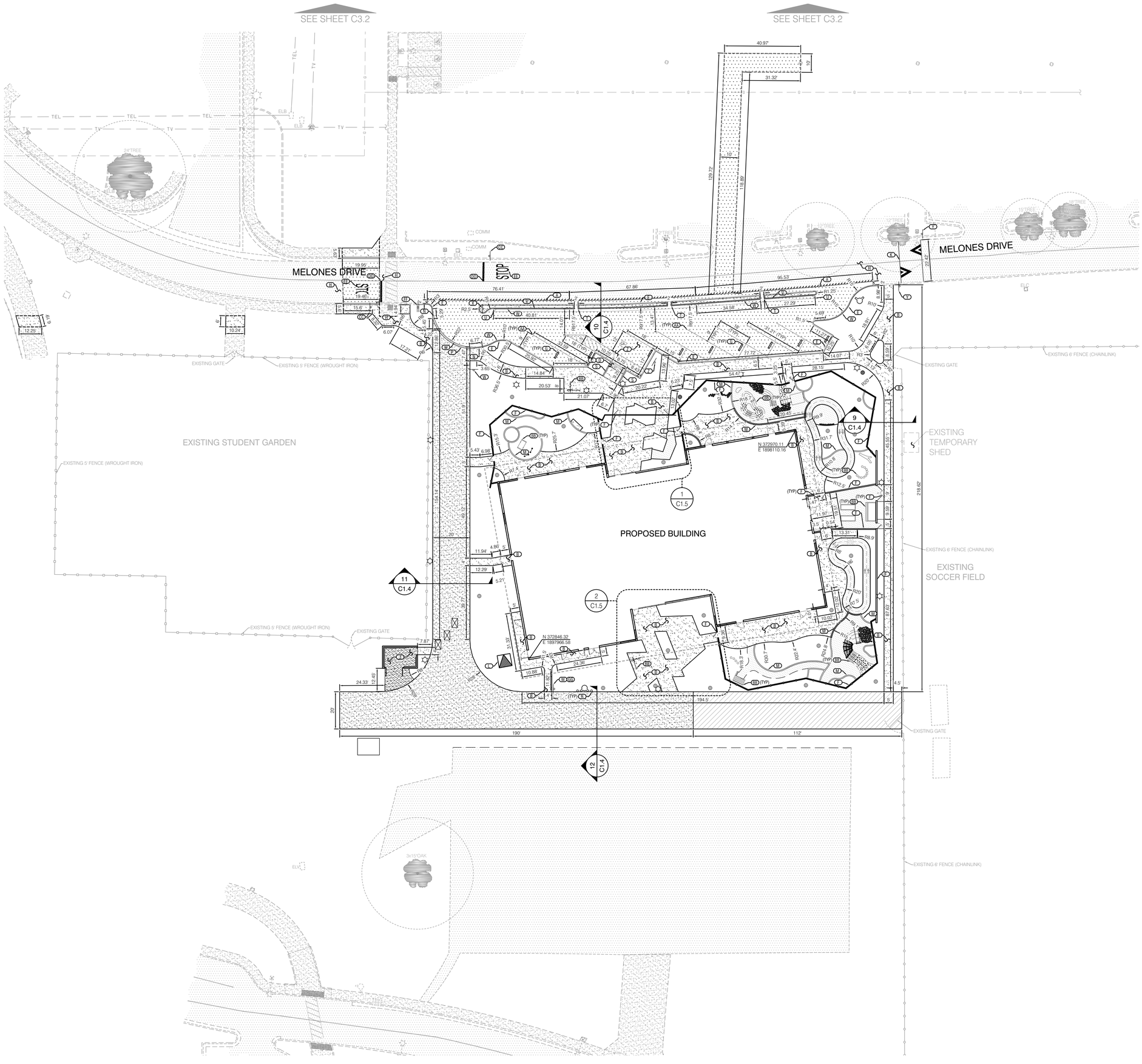

HATCH LEGEND

- EXISTING PAVEMENT
- EXISTING CONCRETE
- EXISTING GRAVEL
- PAVEMENT SECTION* - STANDARD DUTY
  TI = 6, R VALUE = 40, 3.5" AC/6" CLASS II AB/12" COMPACTED SUBGRADE (95%RC)
  SEE GEOTECHNICAL REPORT FOR ADDITIONAL RECOMMENDATIONS
- CONCRETE SECTION** - PEDESTRIAN
  4"PCC/12" COMPACTED SUBGRADE (95%RC)
  W/#4 REBAR @ 24" O.C. BOTH DIRECTIONS
  SEE GEOTECHNICAL REPORT FOR ADDITIONAL RECOMMENDATIONS
- CONCRETE SECTION** - FIRE LANE
  TI = 6.0, 6"PCC/12" COMPACTED SUBGRADE (95%RC)
  W/#4 REBAR @ 24" O.C. BOTH DIRECTIONS
  SEE GEOTECHNICAL REPORT FOR ADDITIONAL RECOMMENDATIONS
- CONCRETE SECTION** - FIRE LANE EXTENSION (ADD ALTERNATIVE)
  ASSUMED TI = 6.0, 6"PCC/12" COMPACTED SUBGRADE (95%RC)
  W/#4 REBAR @ 24" O.C. BOTH DIRECTIONS
  SEE GEOTECHNICAL REPORT FOR ADDITIONAL RECOMMENDATIONS
- IMPERVIOUS LANDSCAPE GROUND COVERING
  SEE LANDSCAPE ARCHITECTURAL PLANS FOR ADDITIONAL INFORMATION
- CONCRETE SECTION** - TRASH ENCLOSURE AND APRON
  SEE ARCHITECTURAL PLANS

*GEOTECHNICAL REPORTS AND/OR ADDENDUMS MAY EXIST, CONTRACTOR SHALL REVIEW DOCUMENTS TO CONFIRM STRUCTURAL SECTIONS.
**SEE ARCHITECTURAL PLANS FOR SCORING, CONTROL JOINTS, PATTERN, COLOR AND ADDITIONAL CONCRETE DETAILS AND SPECIFICATIONS.

KEY NOTES

REFER TO APPLICABLE NOTES ON SHEET C1.2 AND APPLICABLE DETAILS ON SHEETS C1.3-C1.5.

REFER TO SHEET C1.7 FOR PAVEMENT DELINEATIONS.

SEE TOPOGRAPHIC AND DEMOLITION SHEET C2.1 FOR ADDITIONAL REMOVAL, REPLACEMENT AND PROTECTION NOTES.

1. SAWCUT AND REMOVE EXISTING PAVEMENT STRUCTURAL SECTION, CONCRETE, AND/OR CURB AS REQUIRED PER THESE PLANS. CONTRACTOR MAY NEED TO FIELD ADJUST SAWCUT LINE TO REMOVE THE CONCRETE SECTION AT THE NEAREST JOINT WHILE MAINTAINING ACCESSIBLE TRANSITION TO PROVIDE ACCESSIBILITY COMPLIANCE BASED ON FIELD CONDITIONS. SEE SAWCUT LAP JOINT DETAIL 3 ON SHEET C1.3 WHERE NEW ASPHALT IS PLACED.
2. ACCESSIBLE PATH OF TRAVEL NOT TO EXCEED 5.0% MAX RUNNING SLOPE AND 2.0% MAX CROSS SLOPE. PLAZA AREAS AND INTERSECTING WALKWAYS NOT TO EXCEED 2.0% MAX SLOPE IN ANY DIRECTION. ACCESSIBLE PATH OF TRAVEL DETERMINATION, ACCESSIBILITY AND SIGNAGE SHALL BE DETERMINED BY ARCHITECTURAL PLANS. SEE ARCHITECTURAL PLANS FOR DIMENSIONS AND DETAILS, INCLUDING HANDRAILS, WHERE APPLICABLE.
3. ACCESSIBLE RAMP 8.33% MAX SLOPE WITH A 2.0% MAX LEVEL LANDING PER DETAIL 7 ON SHEET C1.4. SEE ARCHITECTURAL PLANS FOR ADDITIONAL INFORMATION.
4. CONTRACTOR SHALL INSTALL DETECTABLE WARNING SURFACE. SEE ARCHITECTURAL PLANS FOR DETAILS AND SPECIFICATIONS.
5. CONTRACTOR SHALL INSTALL 6" VERTICAL CURB PER DETAIL 7 ON SHEET C1.3.
6. CONTRACTOR SHALL INSTALL WALL, FENCE AND/OR GATE PER LANDSCAPE ARCHITECT SPECIFICATIONS. SEE LANDSCAPE ARCHITECTURAL PLANS FOR DETAILS AND SPECIFICATIONS.
7. CONTRACTOR SHALL INSTALL WHEEL STOP PER SEE DETAIL 8 ON SHEET C1.3.
8. CONTRACTOR SHALL TRANSITION GRADE TO MATCH EXISTING.
9. CONTRACTOR SHALL CONSTRUCT TRASH ENCLOSURE. SEE ARCHITECTURAL PLANS FOR DETAILS.
10. CONTRACTOR SHALL INSTALL SPEED HUMP PER DETAIL 12 ON SHEET C1.3.
11. CONTRACTOR SHALL INSTALL ELECTRICAL TRANSFORMER PAD. SEE ELECTRICAL PLANS FOR ADDITIONAL INFORMATION.
12. CONTRACTOR SHALL INSTALL CONCRETE MOW STRIP, CONCRETE CURB OR DOWNTURN EDGE OF SIDEWALK PER LANDSCAPE ARCHITECTURAL PLANS.
13. CONTRACTOR SHALL TRANSITION FROM 4.5" DRIVE-OVER CURB TO 6" VERTICAL CURB. SEE DETAIL 16 ON SHEET C1.3 FOR ADDITIONAL INFORMATION.
14. CONTRACTOR SHALL INSTALL 4.5" DRIVE-OVER CURB PER DETAIL 15 ON SHEET C1.3.
15. CONTRACTOR SHALL INSTALL FIXED BOLLARD PER DETAIL 4 ON SHEET C1.5. BOLLARD LOCATION SHALL NOT OBSTRUCT HOSE CONNECTIONS. *USE EXTREME CAUTION* WHEN INSTALLING FOOTINGS TO AVOID UNDERGROUND UTILITIES.
16. CONTRACTOR SHALL TRANSITION FROM 6" TO 0" CURB.
17. CONTRACTOR SHALL INSTALL 2' WIDE CURB CUT IN STANDARD 6" VERTICAL CURB AND GUTTER PAN. SEE DETAIL 5 ON SHEET C1.4.
18. CONTRACTOR SHALL TRANSITION GUTTER PAN LIP PER DETAIL 4 ON SHEET C1.4.
19. CONTRACTOR SHALL INSTALL 6" VERTICAL CURB AND GUTTER PER DETAIL 1 ON SHEET C1.5.
20. ALL AREAS INDICATED SHALL BE MARKED WITH RED CURB AND WHITE STENCILS "NO PARKING - FIRE LANE" INCLUDING THE PROPER SIGNAGE IN ACCORDANCE WITH THE REQUIREMENTS OF THE OFFICE OF THE STATE FIRE MARSHALL AND FIRE DEPARTMENT. SEE FIRE LANE DETAIL 11 ON SHEET C1.3. IN LIEU OF PAINTING "NO PARKING" RED CURB CONTRACTOR SHALL INSTALL "NO PARKING" SIGNAGE AS DIRECTED BY THE FIRE DEPARTMENT PER DETAIL 11 ON SHEET C1.3. *USE EXTREME CAUTION* WHEN INSTALLING POST AND FOOTINGS TO AVOID UNDERGROUND UTILITIES.
21. CONTRACTOR SHALL INSTALL TEMPORARY PARKING SIGN. *USE EXTREME CAUTION* WHEN INSTALLING POST AND FOOTINGS TO AVOID UNDERGROUND UTILITIES. CONTRACTOR SHALL COORDINATE WITH PROPERTY OWNER FOR PLACEMENT.
22. CONTRACTOR SHALL INSTALL SPEED HUMP SIGN W17-1 PER THE MOST CURRENT EDITION OF THE CALIFORNIA MUTCD.
23. CONTRACTOR SHALL INSTALL ACCESSIBLE SIGNAGE AND STRIPING AS INDICATED BY THE ARCHITECT, PER THE LATEST EDITION OF THE CALIFORNIA BUILDING CODE. SEE DETAIL 17 ON SHEET C1.3. FOR ADDITIONAL DETAILS AND SPECIFICATIONS. *USE EXTREME CAUTION* WHEN INSTALLING SIGN FOOTINGS AS UNDERGROUND UTILITIES MAY EXIST.
24. CONTRACTOR SHALL INSTALL STRIPING INCLUDING CROSSWALKS AS INDICATED BY THE ARCHITECT AND THE LATEST EDITION OF THE CALIFORNIA BUILDING CODE STANDARDS. SEE ARCHITECTURAL PLANS FOR ADDITIONAL DETAILS AND SPECIFICATIONS.
25. CONTRACTOR SHALL INSTALL EQUIPMENT/LANDSCAPE ARCHITECTURAL AMENITY PER LANDSCAPE ARCHITECTURAL PLANS. REFER TO LANDSCAPE ARCHITECTURAL PLANS FOR ADDITIONAL INFORMATION. *USE EXTREME CAUTION* WHEN INSTALLING FOOTINGS TO AVOID UNDERGROUND UTILITIES.
26. CONTRACTOR SHALL INSTALL STOP SIGN R1-1 PER THE MOST CURRENT EDITION OF THE CALIFORNIA MUTCD. *USE EXTREME CAUTION* WHEN INSTALLING POST AND FOOTINGS TO AVOID UNDERGROUND UTILITIES.
27. CONTRACTOR SHALL INSTALL STOP BAR PER THE MOST CURRENT EDITION OF THE CALIFORNIA MUTCD.
28. CONTRACTOR SHALL INSTALL STOP LEGEND PER THE MOST CURRENT EDITION OF THE CALIFORNIA MUTCD.
29. CONTRACTOR SHALL INSTALL LEFT ARROW AND RIGHT ARROW FIRE DEPARTMENT CONNECTION SIGNAGE PER DETAIL 6 ON SHEET C1.4. CONTRACTOR SHALL INSTALL DOUBLE SIDED SIGNAGE TO POINT TOWARDS PROPOSED FIRE DEPARTMENT CONNECTION. *USE EXTREME CAUTION* WHEN INSTALLING POST AND FOOTINGS TO AVOID UNDERGROUND UTILITIES.
30. CONTRACTOR SHALL INSTALL DOWN ARROW FIRE DEPARTMENT CONNECTION SIGNAGE PER DETAIL 6 ON SHEET C1.4. CONTRACTOR SHALL INSTALL SIGNAGE TO POINT TOWARDS PROPOSED FIRE DEPARTMENT CONNECTION. *USE EXTREME CAUTION* WHEN INSTALLING POST AND FOOTINGS TO AVOID UNDERGROUND UTILITIES.

Division of the State Archi
APPROVED
DIV. OF THE STATE ARCHITECT
APP: 02-119316 INC:
REVIEWED FOR
SS☐ FLS☐ ACS☑
DATE: 03/24/2022

Office of the State Fire Marshal
OFFICE OF THE STATE FIRE MARSHAL
APPROVED FIRE AND PANIC ONLY
03/14/22
21-0498
Approval of this plan does not authorize or approve any omission or deviation from applicable regulations. Final approval is subject to field inspection. One set of approved plans shall be available on the project site at all times.

CSUS CHILD DEVELOPMENT CENTER

CALIFORNIA STATE UNIVERSITY, STANISLAUS
ONE UNIVERSITY CIRCLE
TURLOCK, CA 95382

ehdd.
PIER 1, BAY 2
THE EMBARCADERO
SAN FRANCISCO, CA 94111
INFO@EHDD.COM
+1 415-285-9193

Consultant
NorthStar Engineering Group, Inc.
* CIVIL ENGINEERING * SURVEYING * PLANNING *
620 12th Street Modesto, CA 95354
(209) 524-3525 Phone (209) 524-3526 Fax

Stamp

REGISTERED PROFESSIONAL ENGINEER — CASEY B. ROGERS — No. C89547 — 12/06/2021 — CIVIL — STATE OF CALIFORNIA

Printing	Date
95% CONSTRUCTION DOCUMENTS	06.25.2021
PERMIT SET	08.16.2021
PERMIT SET - DSA V2	12.15.2021
PERMIT SET - SFM	12.21.2021

Revisions and Description	Date

Scale
As Shown

Drawn by
BEC

EHDD Job Number
20020

Sheet Title
DIMENSION AND PAVING PLAN

Sheet Number
C3.1 **V3**

COPYRIGHT 2021 NORTHSTAR ENGINEERING GROUP, INC

PLOTTED: 13/06/2021 16:08 PLOTTED BY: Cashier
DWGNAME: P:\20-21\20-CSUS_Child Development - Cash\Cad\C3\Plan\C3.1 - DIM.dwg

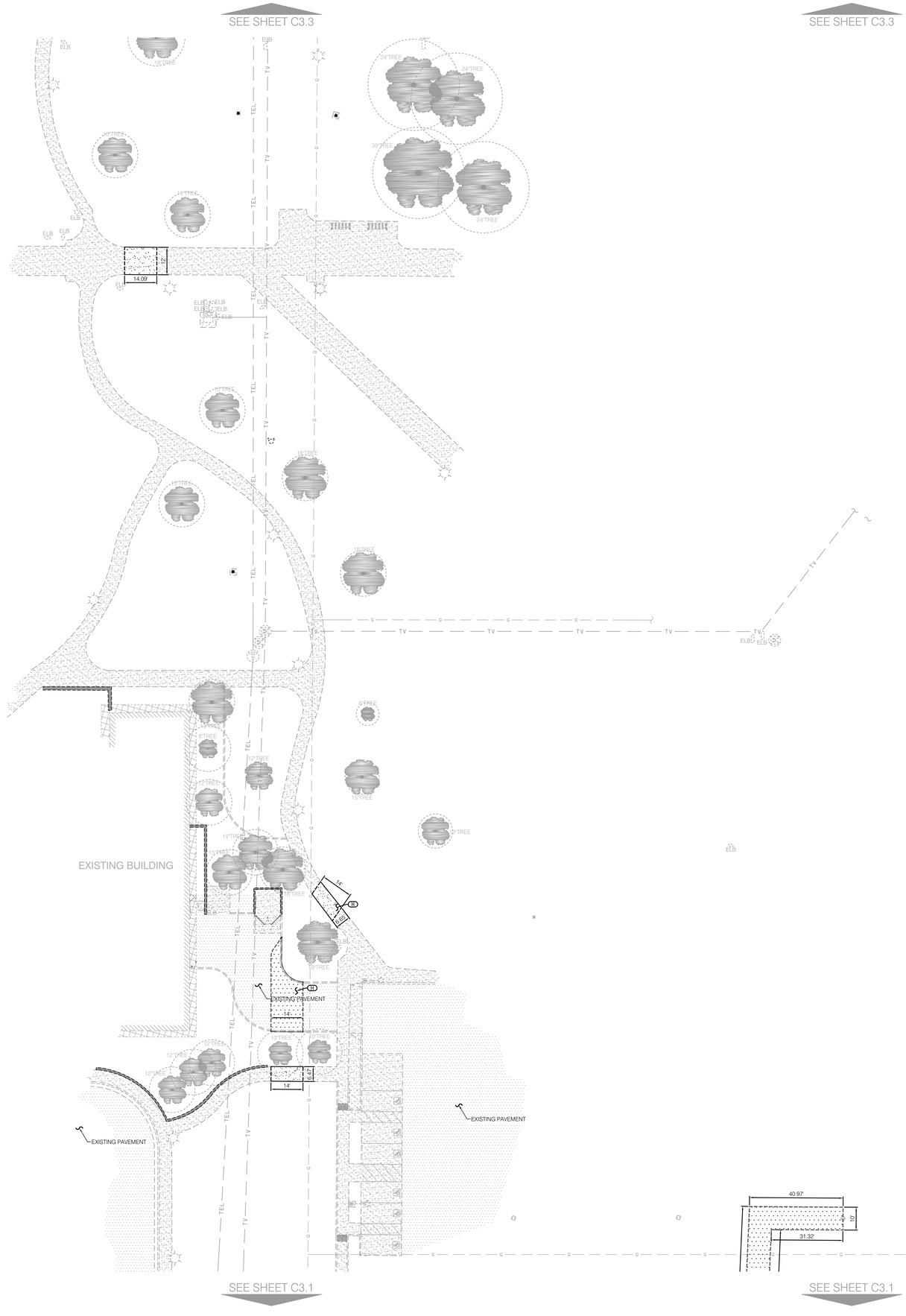

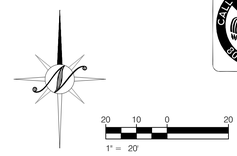

HATCH LEGEND

- EXISTING PAVEMENT
- EXISTING CONCRETE
- EXISTING GRAVEL
- PAVEMENT SECTION* - STANDARD DUTY TI = 6, R VALUE = 40, 3.5" AC/6" CLASS II AB/12" COMPACTED SUBGRADE (95%RC) SEE GEOTECHNICAL REPORT FOR ADDITIONAL RECOMMENDATIONS
- CONCRETE SECTION** - PEDESTRIAN 4"PCC/12" COMPACTED SUBGRADE (95%RC) W/#4 REBAR @ 24" O.C. BOTH DIRECTIONS SEE GEOTECHNICAL REPORT FOR ADDITIONAL RECOMMENDATIONS
- CONCRETE SECTION** - FIRE LANE TI = 6.0, 6"PCC/12" COMPACTED SUBGRADE (95%RC) W/#4 REBAR @ 24" O.C. BOTH DIRECTIONS SEE GEOTECHNICAL REPORT FOR ADDITIONAL RECOMMENDATIONS
- CONCRETE SECTION** - FIRE LANE EXTENSION (ADD ALTERNATIVE) ASSUMED TI = 6.0, 6"PCC/12" COMPACTED SUBGRADE (95%RC) W/#4 REBAR @ 24" O.C. BOTH DIRECTIONS SEE GEOTECHNICAL REPORT FOR ADDITIONAL RECOMMENDATIONS
- IMPERVIOUS LANDSCAPE GROUND COVERING SEE LANDSCAPE ARCHITECTURAL PLANS FOR ADDITIONAL INFORMATION
- CONCRETE SECTION** - TRASH ENCLOSURE AND APRON SEE ARCHITECTURAL PLANS

*GEOTECHNICAL REPORTS AND/OR ADDENDUMS MAY EXIST, CONTRACTOR SHALL REVIEW DOCUMENTS TO CONFIRM STRUCTURAL SECTIONS.
**SEE ARCHITECTURAL PLANS FOR SCORING, CONTROL JOINTS, PATTERN, COLOR AND ADDITIONAL CONCRETE DETAILS AND SPECIFICATIONS.

KEY NOTES

REFER TO APPLICABLE NOTES ON SHEET C1.2 AND APPLICABLE DETAILS ON SHEETS C1.3-C1.5.

REFER TO SHEET C1.7 FOR PAVEMENT DELINEATIONS.

SEE TOPOGRAPHIC AND DEMOLITION SHEET C2.1 FOR ADDITIONAL REMOVAL, REPLACEMENT AND PROTECTION NOTES.

(1) SAWCUT AND REMOVE EXISTING PAVEMENT STRUCTURAL SECTION, CONCRETE, AND/OR CURB AS REQUIRED PER THESE PLANS. CONTRACTOR MAY NEED TO FIELD ADJUST SAWCUT LINE TO REMOVE THE CONCRETE SECTION AT THE NEAREST JOINT WHILE MAINTAINING ACCESSIBLE TRANSITION TO PROVIDE ACCESSIBILITY COMPLIANCE BASED ON FIELD CONDITIONS. SEE SAWCUT LAP JOINT DETAIL 3 ON SHEET C1.3 WHERE NEW ASPHALT IS PLACED.

(2) ACCESSIBLE PATH OF TRAVEL NOT TO EXCEED 5.0% MAX RUNNING SLOPE AND 2.0% MAX CROSS SLOPE. PLAZA AREAS AND INTERSECTING WALKWAYS NOT TO EXCEED 2.0% MAX SLOPE IN ANY DIRECTION. ACCESSIBLE PATH OF TRAVEL DETERMINATION, ACCESSIBILITY AND SIGNAGE SHALL BE DETERMINED BY ARCHITECTURAL PLANS. SEE ARCHITECTURAL PLANS FOR DIMENSIONS AND DETAILS, INCLUDING HANDRAILS, WHERE APPLICABLE.

(3) ACCESSIBLE RAMP 8.33% MAX SLOPE WITH A 2.0% MAX LEVEL LANDING PER DETAIL 7 ON SHEET C1.4. SEE ARCHITECTURAL PLANS FOR ADDITIONAL INFORMATION.

(4) CONTRACTOR SHALL INSTALL DETECTABLE WARNING SURFACE. SEE ARCHITECTURAL PLANS FOR DETAILS AND SPECIFICATIONS.

(5) CONTRACTOR SHALL INSTALL 6" VERTICAL CURB PER DETAIL 7 ON SHEET C1.3.

(6) CONTRACTOR SHALL INSTALL WALL, FENCE AND/OR GATE PER LANDSCAPE ARCHITECT SPECIFICATIONS. SEE LANDSCAPE ARCHITECTURAL PLANS FOR DETAILS AND SPECIFICATIONS.

(7) CONTRACTOR SHALL INSTALL WHEEL STOP PER SEE DETAIL 8 ON SHEET C1.3.

(8) CONTRACTOR SHALL TRANSITION GRADE TO MATCH EXISTING.

(9) CONTRACTOR SHALL CONSTRUCT TRASH ENCLOSURE. SEE ARCHITECTURAL PLANS FOR DETAILS.

(10) CONTRACTOR SHALL INSTALL SPEED HUMP PER DETAIL 12 ON SHEET C1.3.

(11) CONTRACTOR SHALL INSTALL ELECTRICAL TRANSFORMER PAD. SEE ELECTRICAL PLANS FOR ADDITIONAL INFORMATION.

(12) CONTRACTOR SHALL INSTALL CONCRETE MOW STRIP, CONCRETE CURB OR DOWNTURN EDGE OF SIDEWALK PER LANDSCAPE ARCHITECTURAL PLANS.

(13) CONTRACTOR SHALL TRANSITION FROM 4.5" DRIVE-OVER CURB TO 6" VERTICAL CURB. SEE DETAIL 16 ON SHEET C1.3 FOR ADDITIONAL INFORMATION.

(14) CONTRACTOR SHALL INSTALL 4.5" DRIVE-OVER CURB PER DETAIL 15 ON SHEET C1.3.

(15) CONTRACTOR SHALL INSTALL FIXED BOLLARD PER DETAIL 4 ON SHEET C1.5. BOLLARD LOCATION SHALL NOT OBSTRUCT HOSE CONNECTIONS. *USE EXTREME CAUTION* WHEN INSTALLING FOOTINGS TO AVOID UNDERGROUND UTILITIES.

(16) CONTRACTOR SHALL TRANSITION FROM 6" TO 0" CURB.

(17) CONTRACTOR SHALL INSTALL 2' WIDE CURB CUT IN STANDARD 6" VERTICAL CURB AND GUTTER PAN. SEE DETAIL 5 ON SHEET C1.4.

(18) CONTRACTOR SHALL TRANSITION GUTTER PAN LIP PER DETAIL 4 ON SHEET C1.4.

(19) CONTRACTOR SHALL INSTALL 6" VERTICAL CURB AND GUTTER PER DETAIL 1 ON SHEET C1.5.

(20) ALL AREAS INDICATED SHALL BE MARKED WITH RED CURB AND WHITE STENCILS "NO PARKING - FIRE LANE" INCLUDING THE PROPER SIGNAGE IN ACCORDANCE WITH THE REQUIREMENTS OF THE OFFICE OF THE STATE FIRE MARSHALL AND FIRE DEPARTMENT. SEE FIRE LANE DETAIL 11 ON SHEET C1.3. IN LIEU OF PAINTING "NO PARKING" RED CURB CONTRACTOR SHALL INSTALL "NO PARKING" SIGNAGE AS DIRECTED BY THE FIRE DEPARTMENT PER DETAIL 11 ON SHEET C1.3. *USE EXTREME CAUTION* WHEN INSTALLING POST AND FOOTINGS TO AVOID UNDERGROUND UTILITIES.

(21) CONTRACTOR SHALL INSTALL TEMPORARY PARKING SIGN. *USE EXTREME CAUTION* WHEN INSTALLING POST AND FOOTINGS TO AVOID UNDERGROUND UTILITIES. CONTRACTOR SHALL COORDINATE WITH PROPERTY OWNER FOR PLACEMENT.

(22) CONTRACTOR SHALL INSTALL SPEED HUMP SIGN W17-1 PER THE MOST CURRENT EDITION OF THE CALIFORNIA MUTCD.

(23) CONTRACTOR SHALL INSTALL ACCESSIBLE SIGNAGE AND STRIPING AS INDICATED BY THE ARCHITECT, PER THE LATEST EDITION OF THE CALIFORNIA BUILDING CODE. SEE DETAIL 17 ON SHEET C1.3. FOR ADDITIONAL DETAILS AND SPECIFICATIONS. *USE EXTREME CAUTION* WHEN INSTALLING SIGN FOOTINGS AS UNDERGROUND UTILITIES MAY EXIST.

(24) CONTRACTOR SHALL INSTALL STRIPING INCLUDING CROSSWALKS AS INDICATED BY THE ARCHITECT AND THE LATEST EDITION OF THE CALIFORNIA BUILDING CODE STANDARDS. SEE ARCHITECTURAL PLANS FOR ADDITIONAL DETAILS AND SPECIFICATIONS.

(25) CONTRACTOR SHALL INSTALL EQUIPMENT/LANDSCAPE ARCHITECTURAL AMENITY PER LANDSCAPE ARCHITECTURAL PLANS. REFER TO LANDSCAPE ARCHITECTURAL PLANS FOR ADDITIONAL INFORMATION. *USE EXTREME CAUTION* WHEN INSTALLING FOOTINGS TO AVOID UNDERGROUND UTILITIES.

(26) CONTRACTOR SHALL INSTALL STOP SIGN R1-1 PER THE MOST CURRENT EDITION OF THE CALIFORNIA MUTCD. *USE EXTREME CAUTION* WHEN INSTALLING POST AND FOOTINGS TO AVOID UNDERGROUND UTILITIES.

(27) CONTRACTOR SHALL INSTALL STOP BAR PER THE MOST CURRENT EDITION OF THE CALIFORNIA MUTCD.

(28) CONTRACTOR SHALL INSTALL STOP LEGEND PER THE MOST CURRENT EDITION OF THE CALIFORNIA MUTCD.

(29) CONTRACTOR SHALL INSTALL LEFT ARROW AND RIGHT ARROW FIRE DEPARTMENT CONNECTION SIGNAGE PER DETAIL 6 ON SHEET C1.4. CONTRACTOR SHALL INSTALL DOUBLE SIDED SIGNAGE TO POINT TOWARDS PROPOSED FIRE DEPARTMENT CONNECTION. *USE EXTREME CAUTION* WHEN INSTALLING POST AND FOOTINGS TO AVOID UNDERGROUND UTILITIES.

(30) CONTRACTOR SHALL INSTALL DOWN ARROW FIRE DEPARTMENT CONNECTION SIGNAGE PER DETAIL 6 ON SHEET C1.4. CONTRACTOR SHALL INSTALL SIGNAGE TO POINT TOWARDS PROPOSED FIRE DEPARTMENT CONNECTION. *USE EXTREME CAUTION* WHEN INSTALLING POST AND FOOTINGS TO AVOID UNDERGROUND UTILITIES.

COPYRIGHT 2021 NORTHSTAR ENGINEERING GROUP, INC

APPROVED
DIV. OF THE STATE ARCHITECT
APP: 02-119316 INC:
REVIEWED FOR
SS☐ FLS☐ ACS☑
DATE: 03/24/2022

Division of the State Archi

Office of the State Fire Marshal

OFFICE OF THE STATE FIRE MARSHAL
APPROVED FIRE AND PANIC ONLY
03/14/22
21-0498
Approval of this plan does not authorize or approve any omission or deviation from applicable requirements. Final approval is subject to field inspection. One set of approved plans shall be available on the project site at all times.

CSUS CHILD DEVELOPMENT CENTER

CALIFORNIA STATE
UNIVERSITY, STANISLAUS
ONE UNIVERSITY CIRCLE
TURLOCK, CA 95382

ehdd.

PIER 1, BAY 2
THE EMBARCADERO
SAN FRANCISCO, CA 94111

INFO@EHDD.COM
+1 415-285-9193

Consultant

NorthStar Engineering Group, Inc.
* CIVIL ENGINEERING * SURVEYING * PLANNING *
620 12th Street Modesto, CA 95354
(209) 524-3525 Phone (209) 524-3526 Fax

Stamp

REGISTERED PROFESSIONAL ENGINEER
CASEY R. BOYD
No. C89547
12/06/2021
CIVIL
STATE OF CALIFORNIA

Printing	Date
95% CONSTRUCTION DOCUMENTS	06.25.2021
PERMIT SET	08.16.2021
PERMIT SET - DSA V2	12.15.2021
PERMIT SET - SFM	12.21.2021

Revisions and Description	Date

Scale
As Shown

Drawn by
BEC

EHDD Job Number
20020

Sheet Title
DIMENSION AND PAVING PLAN

Sheet Number
C3.2 **V3**

PLOTTED: 12/06/2021 16:09 PLOTTED BY: Cecilia
DWGNAME: P:\20-2732.CSUC.Child Development - Cert\Cert\CD Plans\C3.2 - DIM.dwg

SEE SHEET C3.2

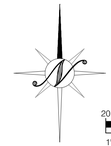

20 10 0 20

1" = 20'

HATCH LEGEND

- EXISTING PAVEMENT
- EXISTING CONCRETE
- EXISTING GRAVEL
- PAVEMENT SECTION* - STANDARD DUTY
  TI = 6, R VALUE = 40, 3.5" AC/6" CLASS II AB/12" COMPACTED SUBGRADE (95%RC)
  SEE GEOTECHNICAL REPORT FOR ADDITIONAL RECOMMENDATIONS
- CONCRETE SECTION** - PEDESTRIAN
  4"PCC/12" COMPACTED SUBGRADE (95%RC)
  W/#4 REBAR @ 24" O.C. BOTH DIRECTIONS
  SEE GEOTECHNICAL REPORT FOR ADDITIONAL RECOMMENDATIONS
- CONCRETE SECTION** - FIRE LANE
  TI = 6.0, 6"PCC/12" COMPACTED SUBGRADE (95%RC)
  W/#4 REBAR @ 24" O.C. BOTH DIRECTIONS
  SEE GEOTECHNICAL REPORT FOR ADDITIONAL RECOMMENDATIONS
- CONCRETE SECTION** - FIRE LANE EXTENSION (ADD ALTERNATIVE)
  ASSUMED TI = 6.0, 6"PCC/12" COMPACTED SUBGRADE (95%RC)
  W/#4 REBAR @ 24" O.C. BOTH DIRECTIONS
  SEE GEOTECHNICAL REPORT FOR ADDITIONAL RECOMMENDATIONS
- IMPERVIOUS LANDSCAPE GROUND COVERING
  SEE LANDSCAPE ARCHITECTURAL PLANS FOR ADDITIONAL INFORMATION
- CONCRETE SECTION** - TRASH ENCLOSURE AND APRON
  SEE ARCHITECTURAL PLANS

*GEOTECHNICAL REPORTS AND/OR ADDENDUMS MAY EXIST, CONTRACTOR SHALL REVIEW DOCUMENTS TO CONFIRM STRUCTURAL SECTIONS.
**SEE ARCHITECTURAL PLANS FOR SCORING, CONTROL JOINTS, PATTERN, COLOR AND ADDITIONAL CONCRETE DETAILS AND SPECIFICATIONS.

KEY NOTES

REFER TO APPLICABLE NOTES ON SHEET C1.2 AND APPLICABLE DETAILS ON SHEETS C1.3-C1.5.

REFER TO SHEET C1.7 FOR PAVEMENT DELINEATIONS.

SEE TOPOGRAPHIC AND DEMOLITION SHEET C2.1 FOR ADDITIONAL REMOVAL, REPLACEMENT AND PROTECTION NOTES.

1. SAWCUT AND REMOVE EXISTING PAVEMENT STRUCTURAL SECTION, CONCRETE, AND/OR CURB AS REQUIRED PER THESE PLANS. CONTRACTOR MAY NEED TO FIELD ADJUST SAWCUT LINE TO REMOVE THE CONCRETE SECTION AT THE NEAREST JOINT WHILE MAINTAINING ACCESSIBLE TRANSITION TO PROVIDE ACCESSIBILITY COMPLIANCE BASED ON FIELD CONDITIONS. SEE SAWCUT LAP JOINT DETAIL 3 ON SHEET C1.3 WHERE NEW ASPHALT IS PLACED.
2. ACCESSIBLE PATH OF TRAVEL NOT TO EXCEED 5.0% MAX RUNNING SLOPE AND 2.0% MAX CROSS SLOPE. PLAZA AREAS AND INTERSECTING WALKWAYS NOT TO EXCEED 2.0% MAX.SLOPE IN ANY DIRECTION. ACCESSIBLE PATH OF TRAVEL DETERMINATION, ACCESSIBILITY AND SIGNAGE SHALL BE DETERMINED BY ARCHITECTURAL PLANS. SEE ARCHITECTURAL PLANS FOR DIMENSIONS AND DETAILS, INCLUDING HANDRAILS, WHERE APPLICABLE.
3. ACCESSIBLE RAMP 8.33% MAX SLOPE WITH A 2.0% MAX LEVEL LANDING PER DETAIL 7 ON SHEET C1.4. SEE ARCHITECTURAL PLANS FOR ADDITIONAL INFORMATION.
4. CONTRACTOR SHALL INSTALL DETECTABLE WARNING SURFACE. SEE ARCHITECTURAL PLANS FOR DETAILS AND SPECIFICATIONS.
5. CONTRACTOR SHALL INSTALL 6" VERTICAL CURB PER DETAIL 7 ON SHEET C1.3.
6. CONTRACTOR SHALL INSTALL WALL, FENCE AND/OR GATE PER LANDSCAPE ARCHITECT SPECIFICATIONS. SEE LANDSCAPE ARCHITECTURAL PLANS FOR DETAILS AND SPECIFICATIONS.
7. CONTRACTOR SHALL INSTALL WHEEL STOP PER SEE DETAIL 8 ON SHEET C1.3.
8. CONTRACTOR SHALL TRANSITION GRADE TO MATCH EXISTING.
9. CONTRACTOR SHALL CONSTRUCT TRASH ENCLOSURE. SEE ARCHITECTURAL PLANS FOR DETAILS.
10. CONTRACTOR SHALL INSTALL SPEED HUMP PER DETAIL 12 ON SHEET C1.3.
11. CONTRACTOR SHALL INSTALL ELECTRICAL TRANSFORMER PAD. SEE ELECTRICAL PLANS FOR ADDITIONAL INFORMATION.
12. CONTRACTOR SHALL INSTALL CONCRETE MOW STRIP, CONCRETE CURB OR DOWNTURN EDGE OF SIDEWALK PER LANDSCAPE ARCHITECTURAL PLANS.
13. CONTRACTOR SHALL TRANSITION FROM 4.5" DRIVE-OVER CURB TO 6" VERTICAL CURB. SEE DETAIL 16 ON SHEET C1.3 FOR ADDITIONAL INFORMATION.
14. CONTRACTOR SHALL INSTALL 4.5" DRIVE-OVER CURB PER DETAIL 15 ON SHEET C1.3.
15. CONTRACTOR SHALL INSTALL FIXED BOLLARD PER DETAIL 4 ON SHEET C1.5. BOLLARD LOCATION SHALL NOT OBESTRUCT HOSE CONNECTIONS. *USE EXTREME CAUTION* WHEN INSTALLING FOOTINGS TO AVOID UNDERGROUND UTILITIES.
16. CONTRACTOR SHALL TRANSITION FROM 6" TO 0" CURB.
17. CONTRACTOR SHALL INSTALL 2' WIDE CURB CUT IN STANDARD 6" VERTICAL CURB AND GUTTER PAN. SEE DETAIL 5 ON SHEET C1.4.
18. CONTRACTOR SHALL TRANSITION GUTTER PAN LIP PER DETAIL 4 ON SHEET C1.4.
19. CONTRACTOR SHALL INSTALL 6" VERTICAL CURB AND GUTTER PER DETAIL 1 ON SHEET C1.5.
20. ALL AREAS INDICATED SHALL BE MARKED WITH RED CURB AND WHITE STENCILS 'NO PARKING - FIRE LANE' INCLUDING THE PROPER SIGNAGE IN ACCORDANCE WITH THE REQUIREMENTS OF THE OFFICE OF THE STATE FIRE MARSHALL AND FIRE DEPARTMENT. SEE FIRE LANE DETAIL 11 ON SHEET C1.3. IN LIEU OF PAINTING 'NO PARKING' RED CURB CONTRACTOR SHALL INSTALL 'NO PARKING' SIGNAGE AS DIRECTED BY THE FIRE DEPARTMENT PER DETAIL 11 ON SHEET C1.3. *USE EXTREME CAUTION* WHEN INSTALLING POST AND FOOTINGS TO AVOID UNDERGROUND UTILITIES.
21. CONTRACTOR SHALL INSTALL TEMPORARY PARKING SIGN. *USE EXTREME CAUTION* WHEN INSTALLING POST AND FOOTINGS TO AVOID UNDERGROUND UTILITIES. CONTRACTOR SHALL COORDINATE WITH PROPERTY OWNER FOR PLACEMENT.
22. CONTRACTOR SHALL INSTALL SPEED HUMP SIGN W17-1 PER THE MOST CURRENT EDITION OF THE CALIFORNIA MUTCD.
23. CONTRACTOR SHALL INSTALL ACCESSIBLE SIGNAGE AND STRIPING AS INDICATED BY THE ARCHITECT. PER THE LATEST EDITION OF THE CALIFORNIA BUILDING CODE. SEE DETAIL 17 ON SHEET C1.3 FOR ADDITIONAL DETAILS AND SPECIFICATIONS. *USE EXTREME CAUTION* WHEN INSTALLING SIGN FOOTINGS AS UNDERGROUND UTILITIES MAY EXIST.
24. CONTRACTOR SHALL INSTALL STRIPING INCLUDING CROSSWALKS AS INDICATED BY THE ARCHITECT AND THE LATEST EDITION OF THE CALIFORNIA BUILDING CODE STANDARDS. SEE ARCHITECTURAL PLANS FOR ADDITIONAL DETAILS AND SPECIFICATIONS.
25. CONTRACTOR SHALL INSTALL EQUIPMENT/LANDSCAPE ARCHITECTURAL AMENITY PER LANDSCAPE ARCHITECTURAL PLANS. REFER TO LANDSCAPE ARCHITECTURAL PLANS FOR ADDITIONAL INFORMATION. *USE EXTREME CAUTION* WHEN INSTALLING FOOTINGS TO AVOID UNDERGROUND UTILITIES.
26. CONTRACTOR SHALL INSTALL STOP SIGN R1-1 PER THE MOST CURRENT EDITION OF THE CALIFORNIA MUTCD. *USE EXTREME CAUTION* WHEN INSTALLING POST AND FOOTINGS TO AVOID UNDERGROUND UTILITIES.
27. CONTRACTOR SHALL INSTALL STOP BAR PER THE MOST CURRENT EDITION OF THE CALIFORNIA MUTCD.
28. CONTRACTOR SHALL INSTALL STOP LEGEND PER THE MOST CURRENT EDITION OF THE CALIFORNIA MUTCD.
29. CONTRACTOR SHALL INSTALL LEFT ARROW AND RIGHT ARROW FIRE DEPARTMENT CONNECTION SIGNAGE PER DETAIL 6 ON SHEET C1.4. CONTRACTOR SHALL INSTALL DOUBLE SIDED SIGNAGE TO POINT TOWARDS PROPOSED FIRE DEPARTMENT CONNECTION. *USE EXTREME CAUTION* WHEN INSTALLING POST AND FOOTINGS TO AVOID UNDERGROUND UTILITIES.
30. CONTRACTOR SHALL INSTALL DOWN ARROW FIRE DEPARTMENT CONNECTION SIGNAGE PER DETAIL 6 ON SHEET C1.4. CONTRACTOR SHALL INSTALL SIGNAGE TO POINT TOWARDS PROPOSED FIRE DEPARTMENT CONNECTION. *USE EXTREME CAUTION* WHEN INSTALLING POST AND FOOTINGS TO AVOID UNDERGROUND UTILITIES.

COPYRIGHT 2021 NORTHSTAR ENGINEERING GROUP, INC

Division of the State Archi

APPROVED
DIV. OF THE STATE ARCHITECT
APP: 02-119316 INC:
REVIEWED FOR
SS☐ FLS☐ ACS☑
DATE: 03/24/2022

Office of the State Fire Marshal

OFFICE OF THE STATE FIRE MARSHAL
APPROVED FIRE AND PANIC ONLY
03/14/22
21-0498
Approval of this plan does not authorize or approve any omission or deviation from applicable regulations. Final approval is subject to field inspection. One set of approved plans shall be available on the project site at all times.

CSUS CHILD DEVELOPMENT CENTER

CALIFORNIA STATE
UNIVERSITY, STANISLAUS
ONE UNIVERSITY CIRCLE
TURLOCK, CA 95382

ehdd.

PIER 1, BAY 2
THE EMBARCADERO
SAN FRANCISCO, CA 94111

INFO@EHDD.COM
+1 415-285-9193

Consultant

NorthStar Engineering Group, Inc.
* CIVIL ENGINEERING * SURVEYING * PLANNING *
620 12th Street Modesto, CA 95354
(209) 524-3525 Phone (209) 524-3526 Fax

Stamp

REGISTERED PROFESSIONAL ENGINEER
CASEY R. WALKER
No. C89547
12/06/2021
CIVIL
STATE OF CALIFORNIA

Printing	Date
95% CONSTRUCTION DOCUMENTS	06.25.2021
PERMIT SET	08.16.2021
PERMIT SET - DSA V2	12.15.2021
PERMIT SET - SFM	12.21.2021

Revisions and Description	Date

Scale
As Shown

Drawn by
BEC

EHDD Job Number
20020

Sheet Title
DIMENSION AND PAVING PLAN

Sheet Number
C3.3 **V3**

PLOTTED: 12/06/2021 14:59 PLOTTED BY: Cwilter
DWGNAME: I:\20\20 CSUS Child Development - Civil\Civil\D Sheets\C3.1 - SIM1.dwg

CALL BEFORE YOU DIG
800-227-2600

20 10 0 20
1" = 20'

Division of the State Archi

APPROVED
DIV. OF THE STATE ARCHITECT
APP: 02-119316 INC:
REVIEWED FOR
SS☐ FLS☐ ACS☑
DATE: 03/24/2022

Office of the State Fire Marshal

OFFICE OF THE STATE FIRE MARSHAL
APPROVED FIRE AND PANIC ONLY
03/14/22
21-0498
Approval of this plan does not authorize or approve any omission or deviation from applicable regulations. Final approval is subject to field inspection. One set of approved plans shall be available on the project site at all times.

CSUS CHILD DEVELOPMENT CENTER

CALIFORNIA STATE
UNIVERSITY, STANISLAUS
ONE UNIVERSITY CIRCLE
TURLOCK, CA 95382

ehdd.

PIER 1, BAY 2
THE EMBARCADERO
SAN FRANCISCO, CA 94111

INFO@EHDD.COM
+1 415-285-9193

Consultant

NorthStar
Engineering Group, Inc.
* CIVIL ENGINEERING * SURVEYING * PLANNING *
620 12th Street Modesto, CA 95354
(209) 524-3525 Phone (209) 524-3526 Fax

KEY NOTES

REFER TO APPLICABLE NOTES ON SHEET C1.2 AND APPLICABLE DETAILS ON SHEETS C1.3-C1.5.

SEE TOPOGRAPHIC AND DEMOLITION SHEET C2.1 FOR ADDITIONAL REMOVAL, REPLACEMENT AND PROTECTION NOTES.

(A) SAWCUT AND REMOVE EXISTING PAVEMENT STRUCTURAL SECTION, CONCRETE, AND/OR CURB AS REQUIRED PER THESE PLANS. CONTRACTOR MAY NEED TO FIELD ADJUST SAWCUT LINE TO REMOVE THE CONCRETE SECTION AT THE NEAREST JOINT WHILE MAINTAINING ACCESSIBLE TRANSITION TO PROVIDE ACCESSIBILITY COMPLIANCE BASED ON FIELD CONDITIONS. SEE SAWCUT LAP JOINT DETAIL 3 ON SHEET C1.3 WHERE NEW ASPHALT IS PLACED.

(B) ACCESSIBLE PATH OF TRAVEL NOT TO EXCEED 5.0% MAX RUNNING SLOPE AND 2.0% MAX CROSS SLOPE. PLAZA AREAS AND INTERSECTING WALKWAYS NOT TO EXCEED 2.0% MAX SLOPE IN ANY DIRECTION. ACCESSIBLE PATH OF TRAVEL DETERMINATION, ACCESSIBILITY AND SIGNAGE SHALL BE DETERMINED BY ARCHITECTURAL PLANS, SEE ARCHITECTURAL PLANS FOR DIMENSIONS AND DETAILS, INCLUDING HANDRAILS, WHERE APPLICABLE.

(C) ACCESSIBLE RAMP 8.33% MAX SLOPE WITH A 2.0% MAX LEVEL LANDING PER DETAIL 7 ON SHEET C1.4. SEE ARCHITECTURAL PLANS FOR ADDITIONAL INFORMATION.

(D) CONTRACTOR SHALL INSTALL DETECTABLE WARNING SURFACE. SEE ARCHITECTURAL PLANS FOR DETAILS AND SPECIFICATIONS.

(E) CONTRACTOR SHALL INSTALL 6" VERTICAL CURB PER DETAIL 7 ON SHEET C1.3.

(F) CONTRACTOR SHALL INSTALL WALL, FENCE AND/OR GATE PER LANDSCAPE ARCHITECT SPECIFICATIONS. SEE LANDSCAPE ARCHITECTURAL PLANS FOR DETAILS AND SPECIFICATIONS.

(G) CONTRACTOR SHALL INSTALL WHEEL STOP PER SEE DETAIL 8 ON SHEET C1.3.

(H) CONTRACTOR SHALL TRANSITION GRADE TO MATCH EXISTING.

(J) CONTRACTOR SHALL CONSTRUCT TRASH ENCLOSURE. SEE ARCHITECTURAL PLANS FOR DETAILS.

(K) CONTRACTOR SHALL INSTALL SPEED HUMP PER DETAIL 12 ON SHEET C1.3.

(L) CONTRACTOR SHALL INSTALL ELECTRICAL TRANSFORMER PAD. SEE ELECTRICAL PLANS FOR ADDITIONAL INFORMATION.

(M) CONTRACTOR SHALL INSTALL CONCRETE MOW STRIP. CONCRETE CURB OR DOWNTURN EDGE OF SIDEWALK PER LANDSCAPE ARCHITECTURAL PLANS.

(N) CONTRACTOR SHALL TRANSITION FROM 4.5" DRIVE-OVER CURB TO 6" VERTICAL CURB. SEE DETAIL 16 ON SHEET C1.3 FOR ADDITIONAL INFORMATION.

(P) CONTRACTOR SHALL INSTALL 4.5" DRIVE-OVER CURB PER DETAIL 15 ON SHEET C1.3.

(R) CONTRACTOR SHALL INSTALL FIXED BOLLARD PER DETAIL 4 ON SHEET C1.5. BOLLARD LOCATION SHALL NOT OBSTRUCT HOSE CONNECTIONS. "USE EXTREME CAUTION" WHEN INSTALLING FOOTINGS TO AVOID UNDERGROUND UTILITIES.

(S) CONTRACTOR SHALL TRANSITION FROM 6" TO 0" CURB.

(T) CONTRACTOR SHALL INSTALL 2' WIDE CURB CUT IN STANDARD 6" VERTICAL CURB AND GUTTER PAN. SEE DETAIL 5 ON SHEET C1.4.

(U) CONTRACTOR SHALL TRANSITION GUTTER PAN LIP PER DETAIL 4 ON SHEET C1.4.

(V) CONTRACTOR SHALL INSTALL 6" VERTICAL CURB AND GUTTER PER DETAIL 1 ON SHEET C1.5.

(W) CONTRACTOR SHALL SWALE AND GRADE LANDSCAPE AREA IN SUCH A WAY THAT NO PONDING WILL OCCUR. CONTRACTOR SHALL GRADE LANDSCAPE AREAS SO THAT ALL RUNOFF IS COLLECTED IN THE STORM DRAIN SYSTEM. ALL LANDSCAPE AREAS THAT ABUT ANY PORTION OF THE BUILDING SHALL BE A MINIMUM OF 8 INCHES (8") BELOW FINISHED FLOOR OF THE ABUTTING BUILDING AND IN NO CASE SHALL THE LANDSCAPE AREA BE GRADED OR LANDSCAPED SUCH THAT WATER DRAINS TOWARD THE BUILDING.

(X) PRIOR TO CONSTRUCTING ANY CONCRETE OR PAVEMENT THE CONTRACTOR SHALL VERIFY THE FINISH FLOOR ELEVATIONS AT ALL DOORS. CONTRACTOR SHALL HOLD FIELD VERIFIED FINISH FLOOR GRADES, ACCOUNT FOR DOOR THRESHOLDS, AND ADJUST GRADES AS NECESSARY TO STAY IN COMPLIANCE WITH CURRENT ACCESSIBLE STANDARDS. CONTRACTOR SHALL NOTIFY NORTHSTAR ENGINEERING IMMEDIATELY IF ANY GRADE ADJUSTMENTS WILL CREATE ANY ACCESSIBILITY ISSUES.

(Y) CONTRACTOR SHALL CONSTRUCT ACCESSIBLE PARKING STALLS AND LOADING/UNLOADING AREAS WITH A MAXIMUM OF 2% SLOPE IN ANY DIRECTION.

(Z) CONTRACTOR SHALL INSTALL WEEP HOLE TO ENSURE CONTINUOUS DRAINAGE FROM TRASH ENCLOSURE.

(AA) PROPOSED LIMITS OF FILL FOR PROPOSED BERM. PROPOSED 3:1 FILL SLOPE FOR BERM NOT TO BE EXCEEDED WHEN DAYLIGHTING INTO EXISTING GROUND. TOP OF BERM TO BE 1' ABOVE EXISTING GRAVEL PARKING LOT. SEE DETAIL 12 ON SHEET C1.4 FOR ADDITIONAL GRADING INFORMATION.

Stamp

REGISTERED PROFESSIONAL ENGINEER
CASEY E. HAINES
No. C89547
12/06/2021
CIVIL
STATE OF CALIFORNIA

Printing	Date
95% CONSTRUCTION DOCUMENTS	06.25.2021
PERMIT SET	08.16.2021
PERMIT SET - DSA V2	12.15.2021
PERMIT SET - SFM	12.21.2021

Revisions and Description	Date

Scale
As Shown

Drawn by
BEC

EHDD Job Number
20020

Sheet Title
GRADING AND DRAINAGE PLAN

Sheet Number
C4.1 **V3**

COPYRIGHT 2021 NORTHSTAR ENGINEERING GROUP, INC

PLOTTED: 12/06/2021 16:10 PLOTTED BY: CaseBar
DWGNAME: T:\20\12\CSUS Child Development\ Civil\Cad\C2 Plans\C4.1 - GRD.dwg

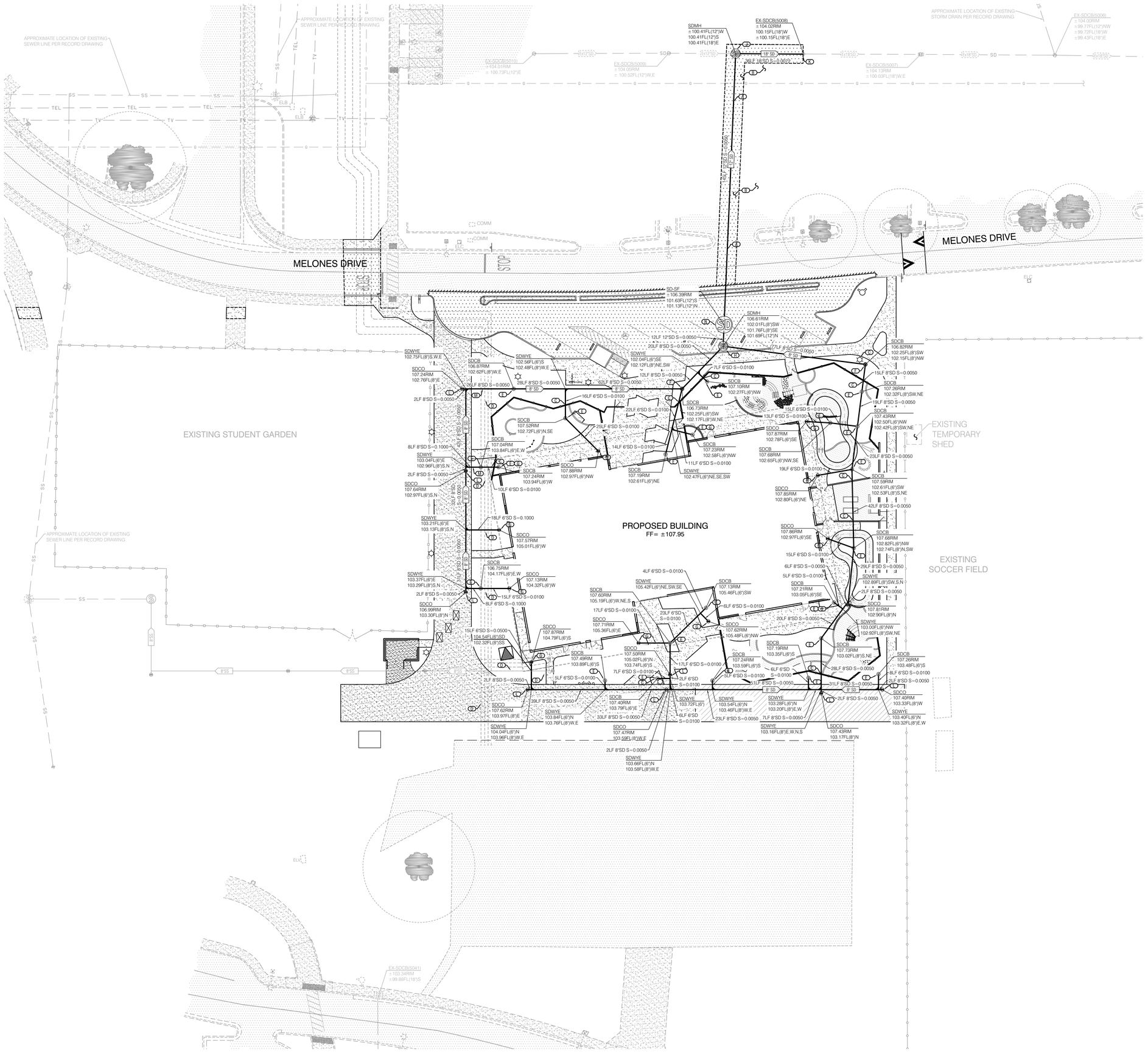

KEY NOTES

REFER TO APPLICABLE NOTES ON SHEET C1.2 AND APPLICABLE DETAILS ON SHEETS C1.3-C1.5.

SEE TOPOGRAPHIC AND DEMOLITION SHEET C2.1 FOR ADDITIONAL REMOVAL, REPLACEMENT AND PROTECTION NOTES.

(8) CONTRACTOR SHALL REPLACE CURB, TRENCH AND PATCH PAVEMENT AND/OR CONCRETE SECTION PER DETAILS 10-12 ON SHEET C1.5 TO ALLOW FOR CONNECTION. DAMAGED CURB, GUTTER AND/OR SIDEWALK SHALL BE REMOVED AND REPLACED TO THE NEAREST SCORE LINE OR CONSTRUCTION JOINT OR AS DETERMINED BY THE CITY ENGINEER.

(9) CONTRACTOR SHALL "USE EXTREME CAUTION" THROUGHOUT THE COURSE OF CONSTRUCTION AS TO AVOID EXISTING UNDERGROUND LINES AND STRUCTURES THAT MAY CONFLICT WITH PROPOSED IMPROVEMENTS.

(10) CONTRACTOR SHALL "USE EXTREME CAUTION" TO AVOID UNDERGROUND UTILITIES WHEN INSTALLING FOOTINGS FOR WALLS AND FENCES AT ALL UTILITY AMENITY/WALL/FENCE CROSSINGS.

(11) APPROXIMATE LOCATION OF MECHANICAL UTILITY TRENCH EDGE SHOWN. CONTRACTOR SHALL REFERENCE MECHANICAL UTILITY PLANS FOR EXACT LOCATION. CONTRACTOR SHALL "USE EXTREME CAUTION" AT ALL UTILITY CROSSINGS AND SHALL COMPLY WITH ALL APPLICABLE STANDARDS. IF A CONFLICT IS FOUND, THE CONTRACTOR SHALL NOTIFY THE ENGINEER IMMEDIATELY. MECHANICAL UTILITY NORTH OF MELONES DRIVE TO BE INSTALLED AS PART OF SITE INFRASTRUCTURE PROJECT.

(1) CONTRACTOR SHALL INSTALL STORM DRAIN CATCH BASIN (SDCB) WITH FLAT GRATED LID FOR SDCB LOCATED IN TURF, AND ATRIUM GRATE FOR SDCB LOCATED IN PLANTER. SEE LANDSCAPE ARCHITECT PLANS FOR TURF LOCATION AND LANDSCAPE DETAILS. SEE DETAIL 10 ON SHEET C1.3 FOR DRAIN DETAIL. CONTRACTOR SHALL UTILIZE NDS BLACK PLASTIC IN NON-TRAFFIC RATED AREAS. CONTRACTOR SHALL SET THE RIM ELEVATION TO FINISH GRADE AND ENSURE THAT NO PONDING OCCURS.

(7) CONTRACTOR SHALL INSTALL 18" CATCH BASIN PER DETAIL 2 ON SHEET C1.4.

(12) APPROXIMATE LOCATION OF ROOF DRAIN SPOUT OR DRAIN CONNECTION. SEE ARCHITECTURAL PLANS FOR EXACT LOCATION AND CONSTRUCTION DETAILS. INSTALL APPROPRIATE REDUCER FITTING TO MATCH PROPOSED BUILDING ROOF DRAIN PIPE SIZE. CONTRACTOR SHALL INSTALL APPROPRIATE LID AS NOTED: INSTALL A SOLID LID FOR CLEANOUT (SDCO), FLAT GRATED LID FOR CATCH BASIN (SDCB) LOCATED IN TURF, AND ATRIUM GRATE FOR SDCB LOCATED IN PLANTER. SEE LANDSCAPE ARCHITECT PLANS FOR TURF LOCATION AND LANDSCAPE DETAILS. SEE DETAIL 1 ON SHEET C1.4 FOR CONNECTION. CONTRACTOR SHALL NOTIFY THE ENGINEER IMMEDIATELY IF ROOF DRAIN CANNOT ACCOMMODATE CONNECTION. CONTRACTOR SHALL SET THE RIM ELEVATION TO FINISH GRADE AND ENSURE THAT NO PONDING OCCURS.

(11) CONTRACTOR SHALL INSTALL STORM DRAIN MANHOLE PER DETAIL 3 ON SHEET C1.5.

(3) CONTRACTOR SHALL CONNECT TO EXISTING STORM DRAIN PIPE AND INSTALL STORM DRAIN MANHOLE PER UNIVERSITY STANDARDS AND SPECIFICATIONS. CONTRACTOR SHALL EXCAVATE EXISTING STORM DRAIN PIPE TO VERIFY THE HORIZONTAL AND VERTICAL ALIGNMENT PRIOR TO THE INSTALLATION OF THE STORM DRAIN PIPE. CONTRACTOR SHALL INFORM THE ENGINEER IF THE ALIGNMENTS ARE DIFFERENT THAN SHOWN.

(4) CONTRACTOR SHALL CONNECT TO EXISTING STORM DRAIN CATCH BASIN PER UNIVERSITY STANDARDS AND SPECIFICATIONS. CONTRACTOR SHALL EXCAVATE EXISTING STORM DRAIN PIPE TO VERIFY THE HORIZONTAL AND VERTICAL ALIGNMENT PRIOR TO THE INSTALLATION OF THE STORM DRAIN PIPE. CONTRACTOR SHALL INFORM THE ENGINEER IF THE ALIGNMENTS ARE DIFFERENT THAN SHOWN.

(5) CONTRACTOR SHALL INSTALL STORM DRAIN CLEANOUT PER DETAIL 9 ON SHEET C1.3.

(13) CONTRACTOR SHALL INSTALL CONCRETE SUPPORT AT ALL UTILITY CROSSINGS THAT DO NOT HAVE AT LEAST 1' OF SEPARATION BETWEEN OUTSIDE DIAMETER OF PIPES.

(6) CONTRACTOR SHALL INSTALL CONTECH STORMFILTER MANHOLE PER MANUFACTURER'S SPECIFICATIONS. CONTRACTOR SHALL COORDINATE WITH THE MANUFACTURER FOR INSTALLATION OF DEVICE. SEE DETAIL 8 ON SHEET C1.4.

COPYRIGHT 2021 NORTHSTAR ENGINEERING GROUP, INC

PLOTTED: 12/6/2021 16:15 PLOTTED BY: CadMaf
DWGNAME: T:\20-21\Ehdd\20020 Child Development - Turlock\CAD\C5 Plan\C5.1 - SD.dwg

Division of the State Archi
APPROVED
DIV. OF THE STATE ARCHITECT
APP: 02-119316 INC:
REVIEWED FOR
SS☐ FLS☐ ACS☑
DATE: 03/24/2022

Office of the State Fire Marshal

OFFICE OF THE STATE FIRE MARSHAL
APPROVED FIRE AND PANIC ONLY
03/14/22
21-0498
Approval of this plan does not authorize or approve any omission or deviation from applicable regulations. Final approval is subject to field inspection. One set of approved plans shall be available on the project site at all times.

CSUS CHILD DEVELOPMENT CENTER

CALIFORNIA STATE UNIVERSITY, STANISLAUS
ONE UNIVERSITY CIRCLE
TURLOCK, CA 95382

ehdd.

PIER 1, BAY 2
THE EMBARCADERO
SAN FRANCISCO, CA 94111

INFO@EHDD.COM
+1 415-285-9193

Consultant

NorthStar Engineering Group, Inc.
* CIVIL ENGINEERING * SURVEYING * PLANNING *
620 12th Street Modesto, CA 95354
(209) 524-3525 Phone (209) 524-3526 Fax

Stamp

REGISTERED PROFESSIONAL ENGINEER CASEY R. WALKER No. C89547 12/06/2021 CIVIL STATE OF CALIFORNIA

Printing	Date
95% CONSTRUCTION DOCUMENTS	06.25.2021
PERMIT SET	08.16.2021
PERMIT SET - DSA V2	12.15.2021
PERMIT SET - SFM	12.21.2021

Revisions and Description	Date

Scale
As Shown

Drawn by
BEC

EHDD Job Number
20020

Sheet Title
STORM DRAINAGE PLAN

Sheet Number
C5.1 **V3**

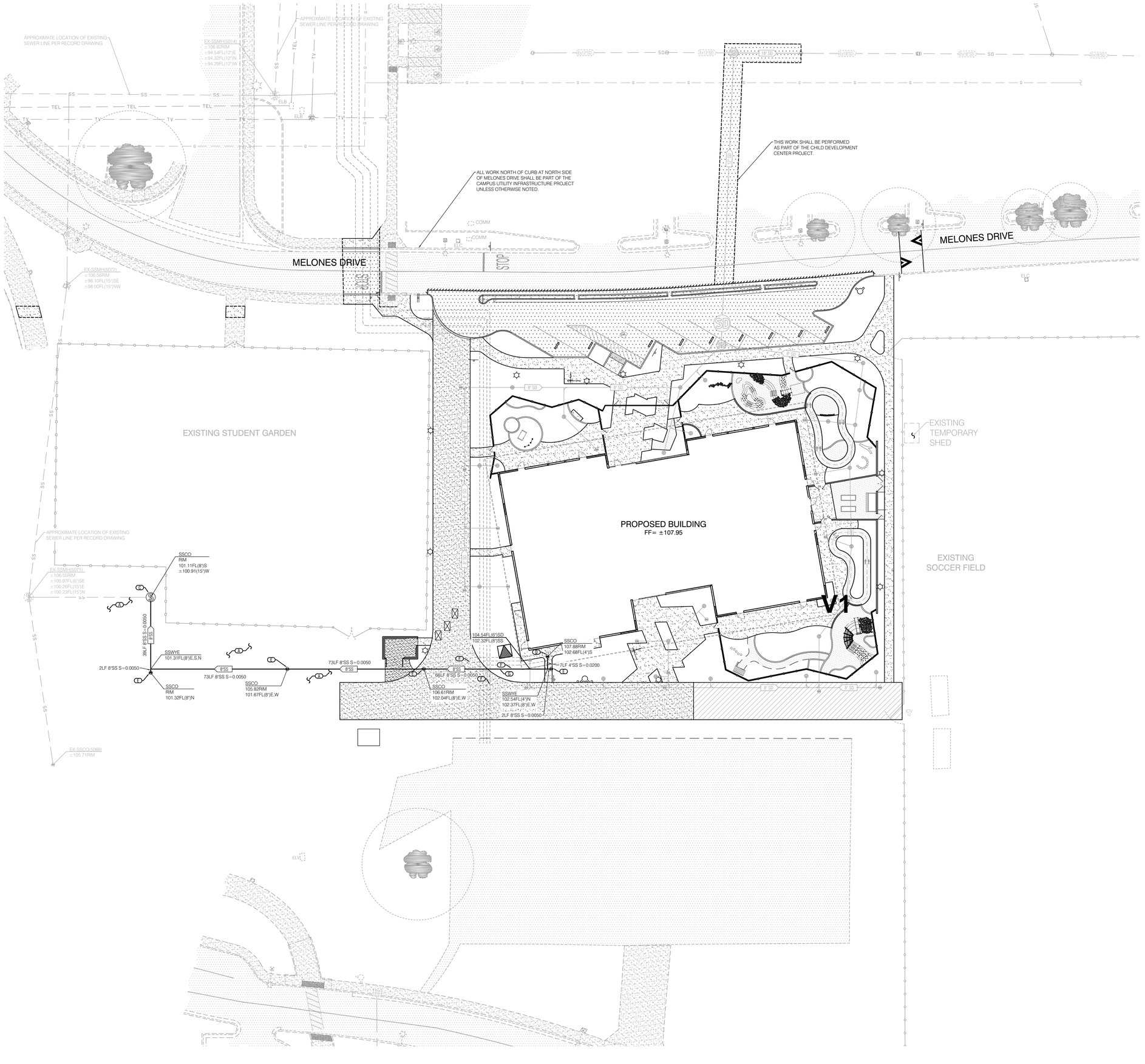

PLOTTED: 12/6/2021 16:10 AUTHOR:BH CreAtor
DWGNAME:T:\20\12\3\05 Child Development - Cad\Land\21PlanSA1 - SS.dwg

Division of the State Archi

APPROVED
DIV. OF THE STATE ARCHITECT
APP: 02-119316 INC:
REVIEWED FOR
SS☐ FLS☐ ACS☑
DATE: 03/24/2022

Office of the State Fire Marshal

OFFICE OF THE STATE FIRE MARSHAL
APPROVED FIRE AND PANIC ONLY
03/14/22
21-0498
Approval of this plan does not authorize or approve any omission or deviation from applicable regulations. Final approval is subject to field inspection. One set of approved plans shall be available on the project site at all times.

CSUS CHILD DEVELOPMENT CENTER

CALIFORNIA STATE
UNIVERSITY, STANISLAUS
ONE UNIVERSITY CIRCLE
TURLOCK, CA 95382

ehdd.

PIER 1, BAY 2
THE EMBARCADERO
SAN FRANCISCO, CA 94111

INFO@EHDD.COM
+1 415-285-9193

Consultant

NorthStar Engineering Group, Inc.
* CIVIL ENGINEERING * SURVEYING * PLANNING *
620 12th Street Modesto, CA 95354
(209) 524-3525 Phone (209) 524-3526 Fax

Stamp

REGISTERED PROFESSIONAL ENGINEER
CASEY T. HAINES
No. C89547
12/06/2021
CIVIL
STATE OF CALIFORNIA

Printing	Date
95% CONSTRUCTION DOCUMENTS	06.25.2021
PERMIT SET	08.16.2021
PERMIT SET - DSA V2	12.15.2021
PERMIT SET - SFM	12.21.2021

Revisions and Description	Date

KEY NOTES

REFER TO APPLICABLE NOTES ON SHEET C1.2 AND APPLICABLE DETAILS ON SHEETS C1.3-C1.5.

SEE TOPOGRAPHIC AND DEMOLITION SHEET C2.1 FOR ADDITIONAL REMOVAL, REPLACEMENT AND PROTECTION NOTES.

A CONTRACTOR SHALL "USE EXTREME CAUTION" THROUGHOUT THE COURSE OF CONSTRUCTION AS TO AVOID EXISTING UNDERGROUND LINES AND STRUCTURES THAT MAY CONFLICT WITH PROPOSED IMPROVEMENTS.

B CONTRACTOR SHALL REPLACE CURB, TRENCH AND PATCH PAVEMENT AND/OR CONCRETE SECTION PER DETAILS 10-12 ON SHEET C1.5 TO ALLOW FOR CONNECTION. DAMAGED CURB, GUTTER AND/OR SIDEWALK SHALL BE REMOVED AND REPLACED TO THE NEAREST SCORE LINE OR CONSTRUCTION JOINT OR AS DETERMINED BY THE CITY ENGINEER.

C CONTRACTOR SHALL CONNECT TO EXISTING SEWER PIPE PER UNIVERSITY STANDARDS AND SPECIFICATIONS. CONTRACTOR SHALL EXCAVATE EXISTING SEWER PIPE TO VERIFY THE HORIZONTAL AND VERTICAL ALIGNMENT PRIOR TO THE INSTALLATION OF THE PROPOSED SEWER SYSTEM. CONTRACTOR SHALL INFORM THE ENGINEER IF THE ALIGNMENTS ARE DIFFERENT THAN SHOWN.

D CONTRACTOR SHALL INSTALL SEWER CLEANOUT PER UNIVERSITY STANDARDS AND SPECIFICATIONS WITH APPROPRIATE FITTINGS AND REDUCER. CONTRACTOR SHALL VERIFY THE LOCATIONS OF THE UTILITY CONNECTIONS WITH THE PLUMBING PLANS PRIOR TO CONSTRUCTION OF PROPOSED STUBS AND STUB 5 FEET FROM THE FACE OF THE BUILDING. SEE PLUMBING PLANS FOR ADDITIONAL INFORMATION.

E CONTRACTOR SHALL INSTALL SEWER CLEANOUT PER DETAIL 9 ON SHEET C1.3.

F APPROXIMATE LOCATION OF MECHANICAL UTILITY TRENCH EDGE SHOWN. CONTRACTOR SHALL REFERENCE MECHANICAL UTILITY PLANS FOR EXACT LOCATION. CONTRACTOR SHALL "USE EXTREME CAUTION" AT ALL UTILITY CROSSINGS AND SHALL COMPLY WITH ALL APPLICABLE STANDARDS. IF A CONFLICT IS FOUND, THE CONTRACTOR SHALL NOTIFY THE ENGINEER IMMEDIATELY. MECHANICAL UTILITY NORTH OF MELONES DRIVE TO BE INSTALLED AS PART OF SITE INFRASTRUCTURE PROJECT.

G CONTRACTOR SHALL INSTALL CONCRETE SUPPORT AT ALL UTILITY CROSSINGS THAT DO NOT HAVE AT LEAST 1' OF SEPARATION BETWEEN OUTSIDE DIAMETER OF PIPES.

Scale
As Shown

Drawn by
BEC

EHDD Job Number
20020

Sheet Title
SANITARY SEWER PLAN

Sheet Number
C6.1 **V3**

COPYRIGHT 2021 NORTHSTAR ENGINEERING GROUP, INC

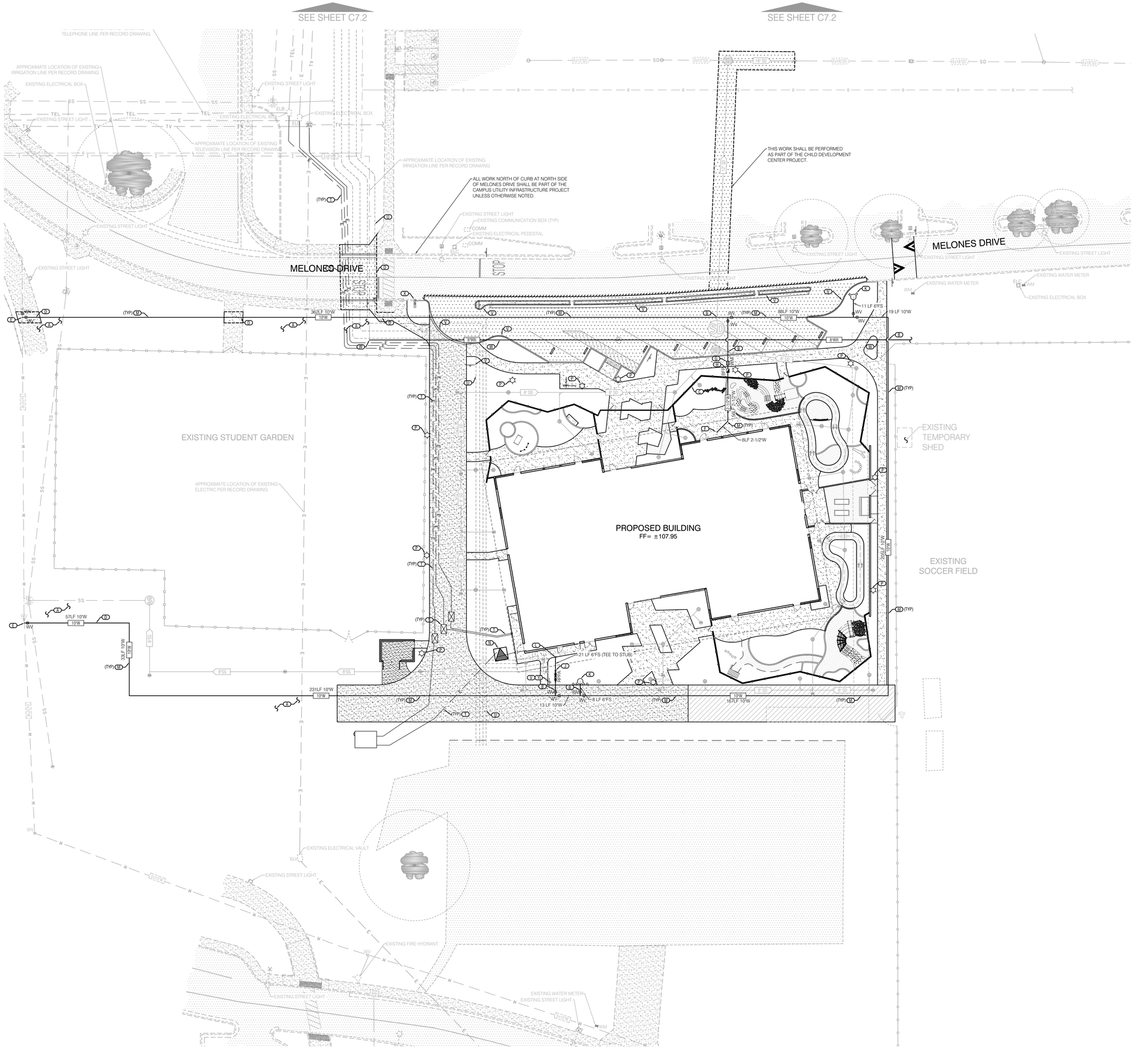

PLOTTED: 12/06/2021 16:11 PLOTTED BY: Cwalker
DWGNAME: P:\20\12\CSUS Child Development - Cwa\Cad\C2 Plans\C7.1 - UTL.dwg

COPYRIGHT 2021 NORTHSTAR ENGINEERING GROUP, INC

KEY NOTES

REFER TO APPLICABLE NOTES ON SHEET C1.2 AND APPLICABLE DETAILS ON SHEETS C1.3-C1.5.

SEE TOPOGRAPHIC AND DEMOLITION SHEET C2.1 FOR ADDITIONAL REMOVAL, REPLACEMENT AND PROTECTION NOTES.

(A) CONTRACTOR SHALL "USE EXTREME CAUTION" THROUGHOUT THE COURSE OF CONSTRUCTION AS TO AVOID EXISTING UNDERGROUND LINES AND STRUCTURES THAT MAY CONFLICT WITH PROPOSED IMPROVEMENTS.

(B) CONTRACTOR SHALL "USE EXTREME CAUTION" AT ALL UTILITY CROSSINGS AND SHALL COMPLY WITH ALL APPLICABLE STANDARDS. IF A CONFLICT IS FOUND, THE CONTRACTOR SHALL NOTIFY THE ENGINEER IMMEDIATELY.

(C) CONTRACTOR SHALL "USE EXTREME CAUTION" TO AVOID UNDERGROUND UTILITIES WHEN INSTALLING FOOTINGS FOR WALLS AND FENCES AT ALL UTILITY WALL/FENCE CROSSINGS.

(D) CONTRACTOR SHALL REPLACE CURB, TRENCH AND PATCH PAVEMENT AND/OR CONCRETE SECTION PER DETAILS 10-12 ON SHEET C1.5 TO ALLOW FOR CONNECTION. DAMAGED CURB, GUTTER AND/OR SIDEWALK SHALL BE REMOVED AND REPLACED TO THE NEAREST SCORE LINE OR CONSTRUCTION JOINT OR AS DETERMINED BY THE CITY ENGINEER.

(E) PROPOSED PRIVATE UNIVERSITY WATER MAIN POINT OF CONNECTION. PER UNIVERSITY STANDARDS CONTRACTOR SHALL EXCAVATE EXISTING WATER PIPE TO VERIFY THE HORIZONTAL AND VERTICAL ALIGNMENT PRIOR TO THE INSTALLATION OF THE WATER PIPE AND REMOVE/EXTEND AS REQUIRED. CONTRACTOR SHALL INFORM THE ENGINEER IF THE ALIGNMENTS ARE DIFFERENT THAN SHOWN. CONTRACTOR SHALL CONNECT TO EXISTING WATER PIPE LINE PER UNIVERSITY STANDARDS AND SPECIFICATIONS. HOT TAP TO BE PERFORMED UNDER SUPERVISION OF UNIVERSITY PERSONNEL. CONTRACTOR TO EXPOSE MAIN AND PROVIDE MATERIALS FEES.

(F) PROPOSED DOMESTIC WATER WITH SHUT OFF VALVE TO BE STUBBED 5 FEET FROM THE FACE OF THE BUILDING. CONTRACTOR SHALL VERIFY THE LOCATIONS OF THE UTILITY CONNECTIONS WITH THE PLUMBING PLANS PRIOR TO CONSTRUCTION OF PROPOSED STUBS.

(G) CONTRACTOR SHALL INSTALL 2-1/2" WATER METER FOR DOMESTIC SERVICE PER UNIVERSITY STANDARDS AND SPECIFICATIONS. "USE EXTREME CAUTION" WHEN INSTALLING DEVICES TO AVOID EXISTING UNDERGROUND UTILITIES THAT MAY EXIST. CONTRACTOR TO FIELD VERIFY PRIOR TO CONSTRUCTION. CITY PERSONNEL WILL DROP METER FOR FEE.

(H) CONTRACTOR SHALL INSTALL 2-1/2" REDUCED PRESSURE BACKFLOW PREVENTER FOR DOMESTIC SERVICE PER DETAIL 8 ON SHEET C1.5 AND UNIVERSITY STANDARDS AND SPECIFICATIONS. "USE EXTREME CAUTION" WHEN INSTALLING DEVICES TO AVOID EXISTING UNDERGROUND UTILITIES THAT MAY EXIST. CONTRACTOR TO FIELD VERIFY PRIOR TO CONSTRUCTION.

(J) CONTRACTOR SHALL INSTALL 6" REDUCED PRESSURE PRINCIPLE ASSEMBLY WITH OS&Y VALVES, TAMPER SWITCH, FDC, AND ASSOCIATED CONDUITS PER UNIVERSITY STANDARDS AND SPECIFICATIONS AND PER FIRE PROTECTION PLANS. SEE DETAIL 9 ON SHEET C1.5. "USE EXTREME CAUTION" WHEN INSTALLING DEVICES TO AVOID EXISTING UNDERGROUND UTILITIES THAT MAY EXIST. CONTRACTOR TO FIELD VERIFY PRIOR TO CONSTRUCTION.

(K) CONTRACTOR SHALL INSTALL FIRE HYDRANT ASSEMBLY PER DETAIL 5 ON SHEET C1.5. MAINTAINING A 3 FEET MINIMUM CLEARANCE SPACE. "USE EXTREME CAUTION" WHEN INSTALLING FOOTINGS TO AVOID UNDERGROUND UTILITIES.

(L) PROPOSED FIRE WATER WITH SHUT OFF VALVE TO BE STUBBED 5 FEET FROM THE FACE OF THE BUILDING. CONTRACTOR SHALL VERIFY THE LOCATIONS OF THE UTILITY CONNECTIONS WITH THE PLUMBING PLANS PRIOR TO CONSTRUCTION OF PROPOSED STUBS.

(M) CONTRACTOR SHALL INSTALL WATER PIPES WITH SUFFICIENT ENOUGH DEPTH TO MAINTAIN 1' MINIMUM VERTICAL CLEARANCE FROM OUTSIDE DIAMETER OF PIPES AND COMPLY WITH THE MOST CURRENT STATE HEALTH CODE AND THE CALIFORNIA BUILDING AND PLUMBING CODE STANDARDS. CONTRACTOR SHALL DEEPEN WATER PIPES AS NECESSARY AND USE EXTREME CAUTION WHEN PLACING THRUST BLOCKS AS TO AVOID CONFLICTS WITH OTHER UTILITY PIPES. CONTRACTOR SHALL INSTALL REDUCERS AS REQUIRED. WATER VALVES SHALL BE INSTALLED ON 4" WATER PIPES OR LARGER AND BALL VALVES/CORP STOPS SHOULD BE INSTALLED ON 3" WATER PIPES OR SMALLER. THRUST BLOCKS SHALL BE INSTALLED AT FIRE HYDRANTS, BLOW-OFFS, TEES, CAPS, BENDS, ENDS, AND CHANGES IN SIZE AND/OR DIRECTION. WATER SEPARATION SHALL BE CONSTRUCTED IN ACCORDANCE WITH SECTION 720.0 AND TABLE 7-7 OF THE CALIFORNIA PLUMBING CODE. SEE DETAIL 6 ON SHEET C1.5 FOR THRUST BLOCK DETAILS AND SPECIFICATIONS.

(N) CONTRACTOR SHALL INSTALL TRANSFORMER PER ELECTRICAL PLANS AND SPECIFICATIONS.

(P) CONTRACTOR SHALL INSTALL LIGHT PER ELECTRICAL PLANS AND SPECIFICATIONS.

(R) CONTRACTOR SHALL INSTALL PAD MOUNTED NETWORK SWITCH PER ELECTRICAL PLANS AND SPECIFICATIONS.

(S) CONTRACTOR SHALL INSTALL VAULTS PER ELECTRICAL PLANS AND SPECIFICATIONS.

(T) CONTRACTOR SHALL INSTALL ELECTRICAL CONDUIT PER ELECTRICAL PLANS AND SPECIFICATIONS. CONTRACTOR SHALL "USE EXTREME CAUTION" AT ALL UTILITY CROSSINGS AND SHALL COMPLY WITH ALL APPLICABLE STANDARDS. IF A CONFLICT IS FOUND, THE CONTRACTOR SHALL NOTIFY THE ENGINEER IMMEDIATELY. ELECTRICAL CONDUIT NORTH OF MELONES DRIVE TO BE INSTALLED AS PART OF SITE INFRASTRUCTURE PROJECT.

(U) APPROXIMATE LOCATION OF MECHANICAL UTILITY TRENCH EDGE SHOWN. CONTRACTOR SHALL REFERENCE MECHANICAL UTILITY PLANS FOR EXACT LOCATION. CONTRACTOR SHALL "USE EXTREME CAUTION" AT ALL UTILITY CROSSINGS AND SHALL COMPLY WITH ALL APPLICABLE STANDARDS. IF A CONFLICT IS FOUND, THE CONTRACTOR SHALL NOTIFY THE ENGINEER IMMEDIATELY. MECHANICAL UTILITY NORTH OF MELONES DRIVE TO BE INSTALLED AS PART OF SITE INFRASTRUCTURE PROJECT.

(V) ALL AREAS INDICATED SHALL BE MARKED WITH RED CURB AND WHITE STENCILS "NO PARKING - FIRE LANE" INCLUDING THE PROPER SIGNAGE IN ACCORDANCE WITH THE REQUIREMENTS OF THE OFFICE OF THE STATE FIRE MARSHALL AND FIRE DEPARTMENT. SEE FIRE LANE DETAIL 11 ON SHEET C1.3. IN LIEU OF PAINTING "NO PARKING" RED CURB CONTRACTOR SHALL INSTALL "NO PARKING" SIGNAGE AS DIRECTED BY THE FIRE DEPARTMENT AND PER DETAIL 11 ON SHEET C1.3. "USE EXTREME CAUTION" WHEN INSTALLING POST AND FOOTINGS TO AVOID UNDERGROUND UTILITIES.

(W) CONTRACTOR SHALL RELOCATE EXISTING IRRIGATION LINE PER LANDSCAPE ARCHITECTURAL PLANS.

(X) CONTRACTOR SHALL INSTALL LEFT ARROW AND RIGHT ARROW FIRE DEPARTMENT CONNECTION SIGNAGE PER DETAIL 6 ON SHEET C1.4. CONTRACTOR SHALL INSTALL DOUBLE SIDED SIGNAGE TO POINT TOWARDS PROPOSED FIRE DEPARTMENT CONNECTION. "USE EXTREME CAUTION" WHEN INSTALLING POST AND FOOTINGS TO AVOID UNDERGROUND UTILITIES.

(Y) CONTRACTOR SHALL INSTALL DOWN ARROW FIRE DEPARTMENT CONNECTION SIGNAGE PER DETAIL 6 ON SHEET C1.4. CONTRACTOR SHALL INSTALL SIGNAGE TO POINT TOWARDS PROPOSED FIRE DEPARTMENT CONNECTION. "USE EXTREME CAUTION" WHEN INSTALLING POST AND FOOTINGS TO AVOID UNDERGROUND UTILITIES.

Division of the State Archi

APPROVED
DIV. OF THE STATE ARCHITECT
APP: 02-119316 INC:
REVIEWED FOR
SS☐ FLS☐ ACS☑
DATE: 03/24/2022

Office of the State Fire Marshal

OFFICE OF THE STATE FIRE MARSHAL
APPROVED FIRE AND PANIC ONLY
03/14/22
21-0498
Approval of this plan does not authorize or approve any omission or deviation from applicable regulations. Final approval is subject to field inspection. One set of approved plans shall be available on the project site at all times.

CSUS CHILD DEVELOPMENT CENTER

CALIFORNIA STATE
UNIVERSITY, STANISLAUS
ONE UNIVERSITY CIRCLE
TURLOCK, CA 95382

ehdd.

PIER 1, BAY 2
THE EMBARCADERO
SAN FRANCISCO, CA 94111

INFO@EHDD.COM
+1 415-285-9193

Consultant

NorthStar Engineering Group, Inc.
* CIVIL ENGINEERING * SURVEYING * PLANNING *
620 12th Street Modesto, CA 95354
(209) 524-3525 Phone (209) 524-3526 Fax

Stamp

REGISTERED PROFESSIONAL ENGINEER
CASEY R. WALKER
No. C89547
12/06/2021
CIVIL
STATE OF CALIFORNIA

Printing	Date
95% CONSTRUCTION DOCUMENTS	06.25.2021
PERMIT SET	08.16.2021
PERMIT SET - DSA V2	12.15.2021
PERMIT SET - SFM	12.21.2021

Revisions and Description	Date

Scale
As Shown

Drawn by
BEC

EHDD Job Number
20020

Sheet Title
COMPOSITE UTILITY PLAN

Sheet Number
C7.1 **V3**

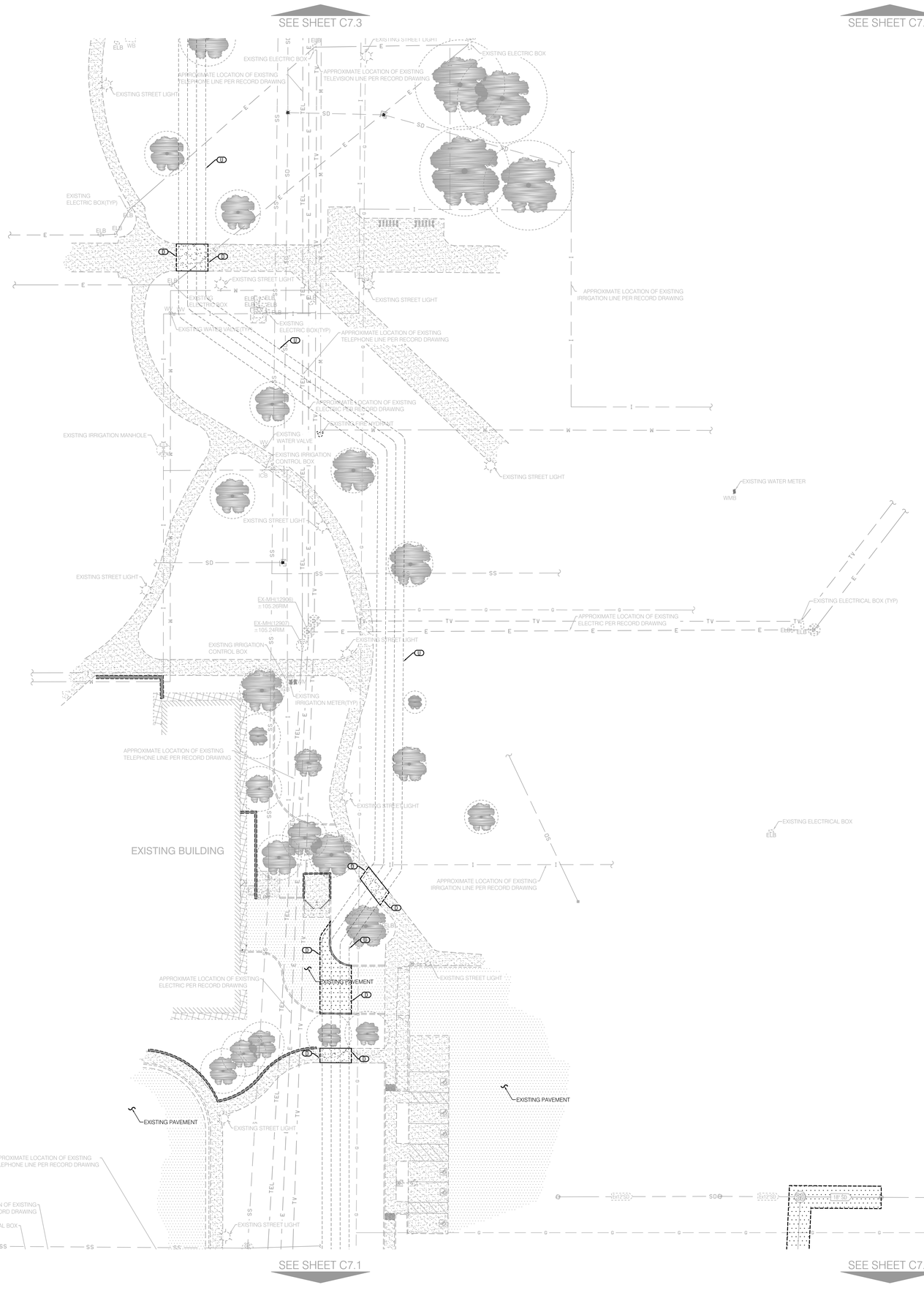

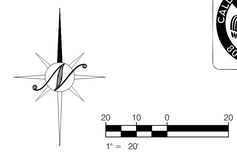

CALL BEFORE YOU DIG 800-227-2600

KEY NOTES

REFER TO APPLICABLE NOTES ON SHEET C1.2 AND APPLICABLE DETAILS ON SHEETS C1.3-C1.5.

SEE TOPOGRAPHIC AND DEMOLITION SHEET C2.1 FOR ADDITIONAL REMOVAL, REPLACEMENT AND PROTECTION NOTES.

(A) CONTRACTOR SHALL "USE EXTREME CAUTION" THROUGHOUT THE COURSE OF CONSTRUCTION AS TO AVOID EXISTING UNDERGROUND LINES AND STRUCTURES THAT MAY CONFLICT WITH PROPOSED IMPROVEMENTS.

(B) CONTRACTOR SHALL "USE EXTREME CAUTION" AT ALL UTILITY CROSSINGS AND SHALL COMPLY WITH ALL APPLICABLE STANDARDS. IF A CONFLICT IS FOUND, THE CONTRACTOR SHALL NOTIFY THE ENGINEER IMMEDIATELY.

(C) CONTRACTOR SHALL "USE EXTREME CAUTION" TO AVOID UNDERGROUND UTILITIES WHEN INSTALLING FOOTINGS FOR WALLS AND FENCES AT ALL UTILITY WALL/FENCE CROSSINGS.

(D) CONTRACTOR SHALL REPLACE CURB, TRENCH AND PATCH PAVEMENT AND/OR CONCRETE SECTION PER DETAILS 10-12 ON SHEET C1.5 TO ALLOW FOR CONNECTION. DAMAGED CURB, GUTTER AND/OR SIDEWALK SHALL BE REMOVED AND REPLACED TO THE NEAREST SCORE LINE OR CONSTRUCTION JOINT OR AS DETERMINED BY THE CITY ENGINEER.

(E) PROPOSED PRIVATE UNIVERSITY WATER MAIN POINT OF CONNECTION. PER UNIVERSITY STANDARDS CONTRACTOR SHALL EXCAVATE EXISTING WATER PIPE TO VERIFY THE HORIZONTAL AND VERTICAL ALIGNMENT PRIOR TO THE INSTALLATION OF THE WATER PIPE AND REMOVE/EXTEND AS REQUIRED. CONTRACTOR SHALL INFORM THE ENGINEER IF THE ALIGNMENTS ARE DIFFERENT THAN SHOWN. CONTRACTOR SHALL CONNECT TO EXISTING WATER PIPE LINE PER UNIVERSITY STANDARDS AND SPECIFICATIONS. HOT TAP TO BE PERFORMED UNDER SUPERVISION OF UNIVERSITY PERSONNEL. CONTRACTOR TO EXPOSE MAIN AND PROVIDE MATERIALS FEES.

(F) PROPOSED DOMESTIC WATER WITH SHUT OFF VALVE TO BE STUBBED 5 FEET FROM THE FACE OF THE BUILDING. CONTRACTOR SHALL VERIFY THE LOCATIONS OF THE UTILITY CONNECTIONS WITH THE PLUMBING PLANS PRIOR TO CONSTRUCTION OF PROPOSED STUBS.

(G) CONTRACTOR SHALL INSTALL 2-1/2" WATER METER FOR DOMESTIC SERVICE PER UNIVERSITY STANDARDS AND SPECIFICATIONS. "USE EXTREME CAUTION" WHEN INSTALLING DEVICES TO AVOID EXISTING UNDERGROUND UTILITIES THAT MAY EXIST. CONTRACTOR TO FIELD VERIFY PRIOR TO CONSTRUCTION. CITY PERSONNEL WILL DROP METER FOR FEE.

(H) CONTRACTOR SHALL INSTALL 2-1/2" REDUCED PRESSURE BACKFLOW PREVENTER FOR DOMESTIC SERVICE PER DETAIL 8 ON SHEET C1.5 AND UNIVERSITY STANDARDS AND SPECIFICATIONS. "USE EXTREME CAUTION" WHEN INSTALLING DEVICES TO AVOID EXISTING UNDERGROUND UTILITIES THAT MAY EXIST. CONTRACTOR TO FIELD VERIFY PRIOR TO CONSTRUCTION.

(I) CONTRACTOR SHALL INSTALL 6" REDUCED PRESSURE PRINCIPLE ASSEMBLY WITH OS&Y VALVES, TAMPER SWITCH, FDC, AND ASSOCIATED CONDUITS PER UNIVERSITY STANDARDS AND SPECIFICATIONS AND PER FIRE PROTECTION PLANS. SEE DETAIL 9 ON SHEET C1.5. "USE EXTREME CAUTION" WHEN INSTALLING DEVICES TO AVOID EXISTING UNDERGROUND UTILITIES THAT MAY EXIST. CONTRACTOR TO FIELD VERIFY PRIOR TO CONSTRUCTION.

(J) CONTRACTOR SHALL INSTALL FIRE HYDRANT ASSEMBLY PER DETAIL 5 ON SHEET C1.5, MAINTAINING A 3 FEET MINIMUM CLEARANCE SPACE. "USE EXTREME CAUTION" WHEN INSTALLING FOOTINGS TO AVOID UNDERGROUND UTILITIES.

(K) PROPOSED FIRE WATER WITH SHUT OFF VALVE TO BE STUBBED 5 FEET FROM THE FACE OF THE BUILDING. CONTRACTOR SHALL VERIFY THE LOCATIONS OF THE UTILITY CONNECTIONS WITH THE PLUMBING PLANS PRIOR TO CONSTRUCTION OF PROPOSED STUBS.

(L) CONTRACTOR SHALL INSTALL WATER PIPES WITH SUFFICIENT ENOUGH DEPTH TO MAINTAIN 1' MINIMUM VERTICAL CLEARANCE FROM OUTSIDE DIAMETER OF PIPES AND COMPLY WITH THE MOST CURRENT STATE HEALTH CODE AND THE CALIFORNIA BUILDING AND PLUMBING CODE STANDARDS. CONTRACTOR SHALL DEEPEN WATER PIPES AS NECESSARY AND USE EXTREME CAUTION WHEN PLACING THRUST BLOCKS AS TO AVOID CONFLICTS WITH OTHER UTILITY PIPES. CONTRACTOR SHALL INSTALL REDUCERS AS REQUIRED. WATER VALVES SHALL BE INSTALLED ON 4" WATER PIPES OR LARGER AND BALL VALVES/CORP STOPS SHOULD BE INSTALLED ON 3" WATER PIPES OR SMALLER. THRUST BLOCKS SHALL BE INSTALLED AT FIRE HYDRANTS, BLOW-OFFS, TEES, CAPS, BENDS, ENDS, AND CHANGES IN SIZE AND/OR DIRECTION. WATER SEPARATION SHALL BE CONSTRUCTED IN ACCORDANCE WITH SECTION 720.0 AND TABLE 7-7 OF THE CALIFORNIA PLUMBING CODE. SEE DETAIL 6 ON SHEET C1.5 FOR THRUST BLOCK DETAILS AND SPECIFICATIONS.

(M) CONTRACTOR SHALL INSTALL TRANSFORMER PER ELECTRICAL PLANS AND SPECIFICATIONS.

(P) CONTRACTOR SHALL INSTALL LIGHT PER ELECTRICAL PLANS AND SPECIFICATIONS.

(S) CONTRACTOR SHALL INSTALL PAD MOUNTED NETWORK SWITCH PER ELECTRICAL PLANS AND SPECIFICATIONS.

(V) CONTRACTOR SHALL INSTALL VAULTS PER ELECTRICAL PLANS AND SPECIFICATIONS.

(T) CONTRACTOR SHALL INSTALL ELECTRICAL CONDUIT PER ELECTRICAL PLANS AND SPECIFICATIONS. CONTRACTOR SHALL "USE EXTREME CAUTION" AT ALL UTILITY CROSSINGS AND SHALL COMPLY WITH ALL APPLICABLE STANDARDS. IF A CONFLICT IS FOUND, THE CONTRACTOR SHALL NOTIFY THE ENGINEER IMMEDIATELY. ELECTRICAL CONDUIT NORTH OF MELONES DRIVE TO BE INSTALLED AS PART OF SITE INFRASTRUCTURE PROJECT.

(U) APPROXIMATE LOCATION OF MECHANICAL UTILITY TRENCH EDGE SHOWN. CONTRACTOR SHALL REFERENCE MECHANICAL UTILITY PLANS FOR EXACT LOCATION. CONTRACTOR SHALL "USE EXTREME CAUTION" AT ALL UTILITY CROSSINGS AND SHALL COMPLY WITH ALL APPLICABLE STANDARDS. IF A CONFLICT IS FOUND, THE CONTRACTOR SHALL NOTIFY THE ENGINEER IMMEDIATELY. MECHANICAL UTILITY NORTH OF MELONES DRIVE TO BE INSTALLED AS PART OF SITE INFRASTRUCTURE PROJECT.

(W) ALL AREAS INDICATED SHALL BE MARKED WITH RED CURB AND WHITE STENCILS "NO PARKING - FIRE LANE" INCLUDING THE PROPER SIGNAGE IN ACCORDANCE WITH THE REQUIREMENTS OF THE OFFICE OF THE STATE FIRE MARSHALL AND FIRE DEPARTMENT. SEE FIRE LANE DETAIL 11 ON SHEET C1.3. IN LIEU OF PAINTING "NO PARKING" RED CURB CONTRACTOR SHALL INSTALL "NO PARKING" SIGNAGE AS DIRECTED BY THE FIRE DEPARTMENT AND PER DETAIL 11 ON SHEET C1.3. "USE EXTREME CAUTION" WHEN INSTALLING POST AND FOOTINGS TO AVOID UNDERGROUND UTILITIES.

(X) CONTRACTOR SHALL RELOCATE EXISTING IRRIGATION LINE PER LANDSCAPE ARCHITECTURAL PLANS.

(Y) CONTRACTOR SHALL INSTALL LEFT ARROW AND RIGHT ARROW FIRE DEPARTMENT CONNECTION SIGNAGE PER DETAIL 6 ON SHEET C1.4. CONTRACTOR SHALL INSTALL DOUBLE SIDED SIGNAGE TO POINT TOWARDS PROPOSED FIRE DEPARTMENT CONNECTION. "USE EXTREME CAUTION" WHEN INSTALLING POST AND FOOTINGS TO AVOID UNDERGROUND UTILITIES.

(Z) CONTRACTOR SHALL INSTALL DOWN ARROW FIRE DEPARTMENT CONNECTION SIGNAGE PER DETAIL 6 ON SHEET C1.4. CONTRACTOR SHALL INSTALL SIGNAGE TO POINT TOWARDS PROPOSED FIRE DEPARTMENT CONNECTION. "USE EXTREME CAUTION" WHEN INSTALLING POST AND FOOTINGS TO AVOID UNDERGROUND UTILITIES.

COPYRIGHT 2021 NORTHSTAR ENGINEERING GROUP, INC

Division of the State Archi

APPROVED
DIV. OF THE STATE ARCHITECT
APP: 02-119316 INC:
REVIEWED FOR
SS☐ FLS☐ ACS☑
DATE: 03/24/2022

Office of the State Fire Marshal

OFFICE OF THE STATE FIRE MARSHAL
APPROVED FIRE AND PANIC ONLY
03/14/22
21-0498
Approval of this plan does not authorize or approve any omission or deviation from applicable requirements. Final approval is subject to field inspection. One set of approved plans shall be available on the project site at all times.

CSUS CHILD DEVELOPMENT CENTER

CALIFORNIA STATE
UNIVERSITY, STANISLAUS
ONE UNIVERSITY CIRCLE
TURLOCK, CA 95382

ehdd.

PIER 1, BAY 2
THE EMBARCADERO
SAN FRANCISCO, CA 94111

INFO@EHDD.COM
+1 415-285-9193

Consultant

NorthStar
Engineering Group, Inc.
* CIVIL ENGINEERING * SURVEYING * PLANNING *
620 12th Street Modesto, CA 95354
(209) 524-3525 Phone (209) 524-3526 Fax

Stamp

REGISTERED PROFESSIONAL ENGINEER
CASEY R. WILLIAMS
No. C89547
12/06/2021
CIVIL
STATE OF CALIFORNIA

Printing	Date
95% CONSTRUCTION DOCUMENTS	06.25.2021
PERMIT SET	08.16.2021
PERMIT SET - DSA V2	12.15.2021
PERMIT SET - SFM	12.21.2021

Revisions and Description	Date

Scale
As Shown

Drawn by
BEC

EHDD Job Number
20020

Sheet Title
COMPOSITE UTILITY PLAN

Sheet Number
C7.2 **V3**

PLOTTED: 12/6/2021 16:11 PLOTTED BY: Cecilia
DWGNAME: P:\20-0712 CSUS Child Development - Cecil\Arch\23 Planset\C7.2 - UPL.dwg

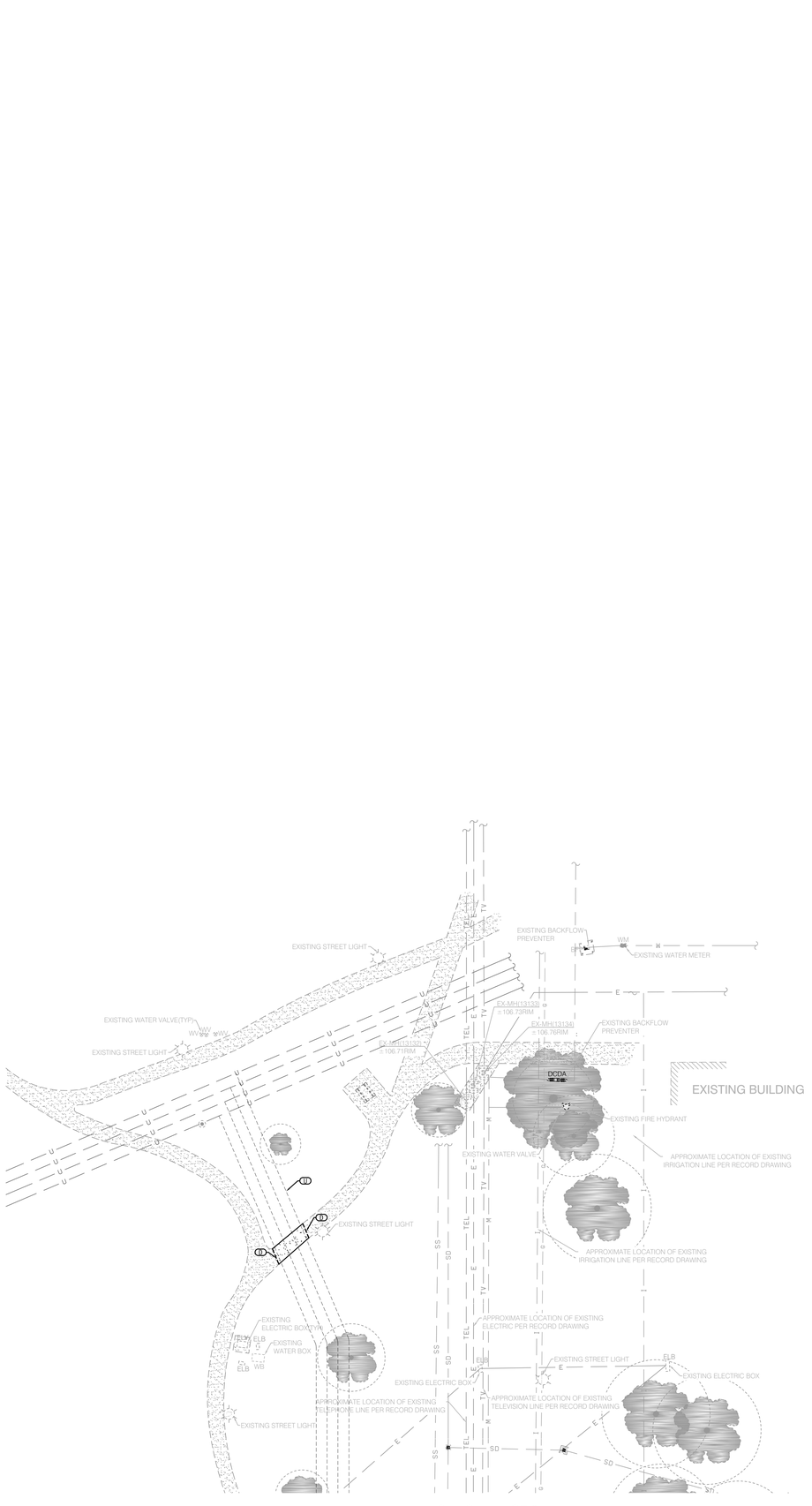

SEE SHEET C7.2

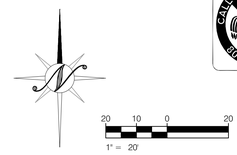

KEY NOTES

REFER TO APPLICABLE NOTES ON SHEET C1.2 AND APPLICABLE DETAILS ON SHEETS C1.3-C1.5.

SEE TOPOGRAPHIC AND DEMOLITION SHEET C2.1 FOR ADDITIONAL REMOVAL, REPLACEMENT AND PROTECTION NOTES.

(A) CONTRACTOR SHALL "USE EXTREME CAUTION" THROUGHOUT THE COURSE OF CONSTRUCTION AS TO AVOID EXISTING UNDERGROUND LINES AND STRUCTURES THAT MAY CONFLICT WITH PROPOSED IMPROVEMENTS.

(B) CONTRACTOR SHALL "USE EXTREME CAUTION" AT ALL UTILITY CROSSINGS AND SHALL COMPLY WITH ALL APPLICABLE STANDARDS. IF A CONFLICT IS FOUND, THE CONTRACTOR SHALL NOTIFY THE ENGINEER IMMEDIATELY.

(C) CONTRACTOR SHALL "USE EXTREME CAUTION" TO AVOID UNDERGROUND UTILITIES WHEN INSTALLING FOOTINGS FOR WALLS AND FENCES AT ALL UTILITY WALL/FENCE CROSSINGS.

(D) CONTRACTOR SHALL REPLACE CURB, TRENCH AND PATCH PAVEMENT AND/OR CONCRETE SECTION PER DETAILS 10-12 ON SHEET C1.5 TO ALLOW FOR CONNECTION. DAMAGED CURB, GUTTER AND/OR SIDEWALK SHALL BE REMOVED AND REPLACED TO THE NEAREST SCORE LINE OR CONSTRUCTION JOINT OR AS DETERMINED BY THE CITY ENGINEER.

(E) PROPOSED PRIVATE UNIVERSITY WATER MAIN POINT OF CONNECTION. PER UNIVERSITY STANDARDS CONTRACTOR SHALL EXCAVATE EXISTING WATER PIPE TO VERIFY THE HORIZONTAL AND VERTICAL ALIGNMENT PRIOR TO THE INSTALLATION OF THE WATER PIPE AND REMOVE/EXTEND AS REQUIRED. CONTRACTOR SHALL INFORM THE ENGINEER IF THE ALIGNMENTS ARE DIFFERENT THAN SHOWN. CONTRACTOR SHALL CONNECT TO EXISTING WATER PIPE LINE PER UNIVERSITY STANDARDS AND SPECIFICATIONS. HOT TAP TO BE PERFORMED UNDER SUPERVISION OF UNIVERSITY PERSONNEL. CONTRACTOR TO EXPOSE MAIN AND PROVIDE MATERIALS FEES.

(F) PROPOSED DOMESTIC WATER WITH SHUT OFF VALVE TO BE STUBBED 5 FEET FROM THE FACE OF THE BUILDING. CONTRACTOR SHALL VERIFY THE LOCATIONS OF THE UTILITY CONNECTIONS WITH THE PLUMBING PLANS PRIOR TO CONSTRUCTION OF PROPOSED STUBS.

(G) CONTRACTOR SHALL INSTALL 2-1/2" WATER METER FOR DOMESTIC SERVICE PER UNIVERSITY STANDARDS AND SPECIFICATIONS. "USE EXTREME CAUTION" WHEN INSTALLING DEVICES TO AVOID EXISTING UNDERGROUND UTILITIES THAT MAY EXIST. CONTRACTOR TO FIELD VERIFY PRIOR TO CONSTRUCTION. CITY PERSONNEL WILL DROP METER FOR FEE.

(H) CONTRACTOR SHALL INSTALL 2-1/2" REDUCED PRESSURE BACKFLOW PREVENTER FOR DOMESTIC SERVICE PER DETAIL 8 ON SHEET C1.5 AND UNIVERSITY STANDARDS AND SPECIFICATIONS. "USE EXTREME CAUTION" WHEN INSTALLING DEVICES TO AVOID EXISTING UNDERGROUND UTILITIES THAT MAY EXIST. CONTRACTOR TO FIELD VERIFY PRIOR TO CONSTRUCTION.

(I) CONTRACTOR SHALL INSTALL 6" REDUCED PRESSURE PRINCIPLE ASSEMBLY WITH OS&Y VALVES, TAMPER SWITCH, FDC, AND ASSOCIATED CONDUITS PER UNIVERSITY STANDARDS AND SPECIFICATIONS AND PER FIRE PROTECTION PLANS. SEE DETAIL 9 ON SHEET C1.5. "USE EXTREME CAUTION" WHEN INSTALLING DEVICES TO AVOID EXISTING UNDERGROUND UTILITIES THAT MAY EXIST. CONTRACTOR TO FIELD VERIFY PRIOR TO CONSTRUCTION.

(J) CONTRACTOR SHALL INSTALL FIRE HYDRANT ASSEMBLY PER DETAIL 5 ON SHEET C1.5, MAINTAINING A 3 FEET MINIMUM CLEARANCE SPACE. "USE EXTREME CAUTION" WHEN INSTALLING FOOTINGS TO AVOID UNDERGROUND UTILITIES.

(K) PROPOSED FIRE WATER WITH SHUT OFF VALVE TO BE STUBBED 5 FEET FROM THE FACE OF THE BUILDING. CONTRACTOR SHALL VERIFY THE LOCATIONS OF THE UTILITY CONNECTIONS WITH THE PLUMBING PLANS PRIOR TO CONSTRUCTION OF PROPOSED STUBS.

(M) CONTRACTOR SHALL INSTALL WATER PIPES WITH SUFFICIENT ENOUGH DEPTH TO MAINTAIN 1' MINIMUM VERTICAL CLEARANCE FROM OUTSIDE DIAMETER OF PIPES AND COMPLY WITH THE MOST CURRENT STATE HEALTH CODE AND THE CALIFORNIA BUILDING AND PLUMBING CODE STANDARDS. CONTRACTOR SHALL DEEPEN WATER PIPES AS NECESSARY AND USE EXTREME CAUTION WHEN PLACING THRUST BLOCKS AS TO AVOID CONFLICTS WITH OTHER UTILITY PIPES. CONTRACTOR SHALL INSTALL REDUCERS AS REQUIRED. WATER VALVES SHALL BE INSTALLED ON 4" WATER PIPES OR LARGER AND BALL VALVES/CORP STOPS SHOULD BE INSTALLED ON 3" WATER PIPES OR SMALLER. THRUST BLOCKS SHALL BE INSTALLED AT FIRE HYDRANTS, BLOW-OFFS, TEES, CAPS, BENDS, ENDS, AND CHANGES IN SIZE AND/OR DIRECTION. WATER SEPARATION SHALL BE CONSTRUCTED IN ACCORDANCE WITH SECTION 720.0 AND TABLE 7-7 OF THE CALIFORNIA PLUMBING CODE. SEE DETAIL 6 ON SHEET C1.5 FOR THRUST BLOCK DETAILS AND SPECIFICATIONS.

(N) CONTRACTOR SHALL INSTALL TRANSFORMER PER ELECTRICAL PLANS AND SPECIFICATIONS.

(P) CONTRACTOR SHALL INSTALL LIGHT PER ELECTRICAL PLANS AND SPECIFICATIONS.

(R) CONTRACTOR SHALL INSTALL PAD MOUNTED NETWORK SWITCH PER ELECTRICAL PLANS AND SPECIFICATIONS.

(S) CONTRACTOR SHALL INSTALL VAULTS PER ELECTRICAL PLANS AND SPECIFICATIONS.

(T) CONTRACTOR SHALL INSTALL ELECTRICAL CONDUIT PER ELECTRICAL PLANS AND SPECIFICATIONS. CONTRACTOR SHALL "USE EXTREME CAUTION" AT ALL UTILITY CROSSINGS AND SHALL COMPLY WITH ALL APPLICABLE STANDARDS. IF A CONFLICT IS FOUND, THE CONTRACTOR SHALL NOTIFY THE ENGINEER IMMEDIATELY. ELECTRICAL CONDUIT NORTH OF MELONES DRIVE TO BE INSTALLED AS PART OF SITE INFRASTRUCTURE PROJECT.

(U) APPROXIMATE LOCATION OF MECHANICAL UTILITY TRENCH EDGE SHOWN. CONTRACTOR SHALL REFERENCE MECHANICAL UTILITY PLANS FOR EXACT LOCATION. CONTRACTOR SHALL "USE EXTREME CAUTION" AT ALL UTILITY CROSSINGS AND SHALL COMPLY WITH ALL APPLICABLE STANDARDS. IF A CONFLICT IS FOUND, THE CONTRACTOR SHALL NOTIFY THE ENGINEER IMMEDIATELY. MECHANICAL UTILITY NORTH OF MELONES DRIVE TO BE INSTALLED AS PART OF SITE INFRASTRUCTURE PROJECT.

(V) ALL AREAS INDICATED SHALL BE MARKED WITH RED CURB AND WHITE STENCILS "NO PARKING - FIRE LANE" INCLUDING THE PROPER SIGNAGE IN ACCORDANCE WITH THE REQUIREMENTS OF THE OFFICE OF THE STATE FIRE MARSHALL AND FIRE DEPARTMENT. SEE FIRE LANE DETAIL 11 ON SHEET C1.3. IN LIEU OF PAINTING "NO PARKING" RED CURB CONTRACTOR SHALL INSTALL "NO PARKING" SIGNAGE AS DIRECTED BY THE FIRE DEPARTMENT AND PER DETAIL 11 ON SHEET C1.3. *USE EXTREME CAUTION* WHEN INSTALLING POST AND FOOTINGS TO AVOID UNDERGROUND UTILITIES.

(W) CONTRACTOR SHALL RELOCATE EXISTING IRRIGATION LINE PER LANDSCAPE ARCHITECTURAL PLANS.

(X) CONTRACTOR SHALL INSTALL LEFT ARROW AND RIGHT ARROW FIRE DEPARTMENT CONNECTION SIGNAGE PER DETAIL 6 ON SHEET C1.4. CONTRACTOR SHALL INSTALL DOUBLE SIDED SIGNAGE TO POINT TOWARDS PROPOSED FIRE DEPARTMENT CONNECTION. *USE EXTREME CAUTION* WHEN INSTALLING POST AND FOOTINGS TO AVOID UNDERGROUND UTILITIES.

(Y) CONTRACTOR SHALL INSTALL DOWN ARROW FIRE DEPARTMENT CONNECTION SIGNAGE PER DETAIL 6 ON SHEET C1.4. CONTRACTOR SHALL INSTALL SIGNAGE TO POINT TOWARDS PROPOSED FIRE DEPARTMENT CONNECTION. *USE EXTREME CAUTION* WHEN INSTALLING POST AND FOOTINGS TO AVOID UNDERGROUND UTILITIES.

COPYRIGHT 2021 NORTHSTAR ENGINEERING GROUP, INC

Division of the State Archi

APPROVED
DIV. OF THE STATE ARCHITECT
APP: 02-119316 INC:
REVIEWED FOR
SS☐ FLS☐ ACS☑
DATE: 03/24/2022

Office of the State Fire Marshal

OFFICE OF THE STATE FIRE MARSHAL
APPROVED FIRE AND PANIC ONLY
03/14/22
21-0498
Approval of this plan does not authorize or approve any omission or deviation from applicable regulations. Final approval is subject to field inspection. One set of approved plans shall be available on the project site at all times.

CSUS CHILD DEVELOPMENT CENTER

CALIFORNIA STATE
UNIVERSITY, STANISLAUS
ONE UNIVERSITY CIRCLE
TURLOCK, CA 95382

ehdd.

PIER 1, BAY 2
THE EMBARCADERO
SAN FRANCISCO, CA 94111

INFO@EHDD.COM
+1 415-285-9193

Consultant

NorthStar Engineering Group, Inc.
* CIVIL ENGINEERING * SURVEYING * PLANNING *
620 12th Street Modesto, CA 95354
(209) 524-3525 Phone (209) 524-3526 Fax

Stamp

REGISTERED PROFESSIONAL ENGINEER
CASEY R. WALKER
No. C89547
12/06/2022
CIVIL
STATE OF CALIFORNIA

Printing	Date
95% CONSTRUCTION DOCUMENTS	06.25.2021
PERMIT SET	08.16.2021
PERMIT SET - DSA V2	12.15.2021
PERMIT SET - SFM	12.21.2021

Revisions and Description	Date

Scale
As Shown

Drawn by
BEC

EHDD Job Number
20020

Sheet Title
COMPOSITE UTILITY PLAN

Sheet Number
C7.3 **V3**

PLOTTED: 12/6/2021 16:12 PLOTTED BY: Cwalker
DWG NAME: T:\20-20\CAD\Sitedevelopment - Civil\Civil\C7\Plan\C7.3 - UTL.dwg

EROSION CONTROL NOTES

1. THESE PLANS DEPICT APPROPRIATE MEASURES TO CONTROL EROSION ON THE SITE TO BE GRADED AS SHOWN ON THE PLANS THE NATIVE VEGETATION WILL BE REMOVED ONLY FROM THOSE AREAS TO BE GRADED. AREAS OUTSIDE OF AND DOWNSLOPE OF THE LIMITS OF GRADING WILL BE PROTECTED FROM SILT LADEN RUNOFF BY PERIMETER SILT FENCES AS DEPICTED ON THIS PLAN. SLOPED AREAS WHICH HAVE BEEN STRIPPED OF VEGETATION AND NEW SLOPES OVER FOUR FEET HIGH CREATED DURING THE GRADING OPERATION WILL BE TRACKWALKED & HYDROSEEDED.
2. ALL EROSION SEDIMENT STRUCTURES SHALL BE INSPECTED AFTER EACH RAINSTORM AND SHALL BE CLEANED OUT AS NECESSARY.
3. A STABILIZED CONSTRUCTION ENTRANCE SHALL BE INSTALLED PRIOR TO COMMENCEMENT OF GRADING. THE LOCATION IS SHOWN ON THESE PLANS. ALL CONSTRUCTION TRAFFIC ENTERING THE PAVED ROAD MUST CROSS THE ENTRANCE.
4. THE CONTRACTOR IS RESPONSIBLE FOR ALL ASPECTS OF EROSION CONTROL FOR THE LIFE OF THE PROJECT AND SHALL INSTALL AND MAINTAIN ANY DEVICES AND MEASURES NECESSARY TO THE SATISFACTION OF THE CITY ENGINEER, DURING CONSTRUCTION ACTIVITIES.
5. TO MINIMIZE EROSION OF GRADED BANKS, ALL GRADED BANKS AND STOCKPILE AREAS SHALL BE HYDROSEEDED, LANDSCAPED OR SEALED.
6. STRAW BALES, PIECES OF WOOD, FABRIC OR OTHER SUITABLE MATERIALS SHALL BE USED TO PREVENT SEDIMENT LADEN RUNOFF FROM ENTERING ANY COMPLETED STORM DRAIN INLETS. THESE PROTECTION MEASURES SHALL BE MAINTAINED UNTIL THE PROJECT IS COMPLETED.
7. WHEN TEMPORARY STRUCTURES HAVE SERVED THEIR INTENDED PURPOSE AND THE CONTRIBUTING DRAINAGE AREA HAS BEEN PROPERLY STABILIZED. THE EMBANKMENT AND RESULTING SEDIMENT DEPOSITS ARE TO BE LEVELED OR OTHERWISE DISPOSED OF BY THE CONTRACTOR AS RECOMMENDED BY THE SOILS ENGINEER.
8. GRADED AREAS MUST DRAIN AWAY FROM THE FACE OF SLOPES AT THE CONCLUSION OF EACH WORKING DAY. DRAINAGE SHALL BE DIRECTED TOWARDS DRAINAGE INLETS.
9. TEMPORARY EROSION CONTROL DEVICES SHOWN ON THIS PLAN WHICH INTERFERE WITH THE WORK SHALL BE RELOCATED OR MODIFIED AS AND WHEN THE INSPECTOR SO DIRECTS AS THE WORK PROGRESSES.
10. ALL LOOSE SOIL AND DEBRIS SHALL BE REMOVED FROM THE STREET AREAS UPON STARTING OPERATIONS AND PERIODICALLY THEREAFTER AS DIRECTED BY THE INSPECTOR.
11. HYDROMULCHING OF SLOPES OVER 5' IN HEIGHT SHALL BE COMPLETED BETWEEN SEPTEMBER 1 AND OCTOBER 1 OF THE YEAR IN WHICH THEY ARE CONSTRUCTED OR IMMEDIATELY AFTER THEIR CONSTRUCTION IF THEY ARE COMPLETED AFTER OCTOBER 1ST. APPLICATION RATES SHALL BE AS FOLLOWS AS REQUIRED BY CITY OF TURLOCK:

HYDROSEED MIX: BOTANICAL NAME	(COMMON NAME)	MIN. % PURITY	MIN. % GERMINATION		LB/ACRE
ARISTIDA TERNIPES VAR. HAMULOSA		(THREE-AWN)	90%	85%	2
BROMUS CARINATUS	(CALIFORNIA BROME)	90%	85%	2	
ELYMUS GLAUCUS	(BLUE WILD RYE)	90%	85%	4	
ELYMUS TRACHYCAULUS SSP. TRACHYCAULUS	(SLENDER WHEATGRASS)	90%	85%	3	
MELICA CALIFORNICA	(CALIFORNIA ONION GRASS)	90%	85%	2	
MUHLENBERGIA RIGENS	(DEER GRASS)	90%	85%	4	
NASSELLA LEPIDA	(FOOTHILL NEEDLEGRASS)	90%	85%	6	
TRIFOLIUM HIRTUM	(HYKON' ROSE CLOVER)	90%	85%	10	
CELLULOSE FIBER MULCH				2000	
ORGANIC BINDER WITH HYDROSEED SLURRY				50	
16-20-0-S FERTILIZER				300	

12. WHEN DIRECTED BY THE INSPECTOR, A 12-INCH BERM SHALL BE MAINTAINED ALONG THE TOP OF THE SLOPE OF THOSE FILLS ON WHICH GRADING IS NOT IN PROGRESS.
13. STAND-BY CREWS SHALL BE ALERTED BY THE PERMITTEE OR CONTRACTOR FOR EMERGENCY WORK DURING RAINSTORMS.
14. SEWER OR STORM DRAIN TRENCHES THAT DRAIN THROUGH BASIN DIKES SHALL BE PLUGGED WITH SANDBAGS FROM TOP OF PIPE TO TOP OF DIKE.
15. ALL UTILITY TRENCHES SHALL BE BLOCKED WHEN DIRECTED BY THE DESIGN ENGINEER AT THE PRESCRIBED INTERVALS FROM THE BOTTOM TO TOP WITH DOUBLE ROW OF SANDBAGS PRIOR TO BACKFILL. SANDBAGS ARE TO BE PLACED WITH ALTERNATE HEADER AND STRETCHER COURSES. THE INTERVALS PRESCRIBED BETWEEN SANDBAG BLOCKING SHALL DEPEND ON THE SLOPE OF THE GROUND SURFACE, BUT NOT TO EXCEED THE FOLLOWING:

GRADE OF GROUND SURFACE OR STREET	INTERVAL
LESS THAN 2%	AS REQUIRED
2% TO 4%	100 FEET
4% TO 10%	50 FEET
OVER 10%	25 FEET

16. PROVIDE VELOCITY CHECK DAMS IN ALL UNPAVED STREET AREAS AT THE INTERVALS INDICATED ABOVE. VELOCITY CHECK DAMS MAY BE CONSTRUCTED OF SANDBAGS, TIMBER, OR OTHER EROSION RESISTANT MATERIALS APPROVED BY THE INSPECTOR, AND SHALL EXTEND COMPLETELY ACROSS THE STREET OR CHANNEL AT RIGHT ANGLES TO THE CENTERLINE. EARTH DIKES MAY NOT BE USED AS VELOCITY CHECK DAMS.
17. AFTER SEWER AND UTILITY TRENCHES ARE BACKFILLED AND COMPACTED, THE SURFACES OVER SUCH TRENCHES SHALL BE MOUNDED SLIGHTLY TO PREVENT CHANNELING OF WATER IN THE TRENCH AREA. CARE SHOULD BE EXERCISED TO PROVIDE FOR CROSS-FLOW AT FREQUENT INTERVALS WHERE TRENCHES ARE NOT ON THE CENTERLINE OF A CROWNED STREET. REMOVE ALL CHECK DAMS PRIOR TO BACKFILL.
18. TO CONTROL SEDIMENT ENTERING FIELD INLETS, PLACE TWO STRAW BALES IN THE CONCRETE V-DITCH AT THE SIDE OPENING OF THE FIELD INLET AT THE LOCATIONS SHOWN ON THIS PLAN.
19. EXCEPT AS OTHERWISE DIRECTED BY THE INSPECTOR, ALL DEVICES SHOWN SHALL BE IN PLACE AT THE END OF EACH WORKING DAY OR WHEN DIRECTED BY THE INSPECTOR.
20. ALL BASINS AND CHECK DAMS SHALL HAVE BEEN PUMPED DRY, AND ALL DEBRIS AND SILT REMOVED WITHIN 24 HOURS AFTER EACH STORM.
21. SANDBAGS SHALL BE STOCKPILED ON-SITE, READY TO BE PLACED IN POSITION WHEN RAIN FORECAST IS 40% CHANCE OR GREATER
22. EXPOSED SLOPES SHALL BE PROTECTED BY VEGETATION COVER OR FABRIC COVER AS APPROVED BY THE CITY ENGINEER.
23. WHEN PAD ELEVATION OF ADJACENT LOTS OR ELEVATION BETWEEN STREET AND LOT ARE SEPARATED BY MORE THAN 6 FEET, A MINIMUM 12" BERM SHALL BE MAINTAINED ALONG THE PROPERTY LINE SEPARATING THE LOTS; AND THE BERM SHALL DIRECT THE WATER TO THE OUTLET. VELOCITY CHECK DAMS SHALL BE INSTALLED BETWEEN THE OUTLET ON THE LOT AND THE STREET.
24. ALL EROSION CONTROL MEASURES SHALL BE IN COMPLIANCE WITH THE LATEST EDITION OF THE CASQA STORMWATER MANAGEMENT HANDBOOK.
25. ALL FINISHED PADS SHALL BE PROTECTED.
26. THE FOLLOWING PLANS ARE ACCURATE FOR EROSION CONTROL PURPOSES ONLY.
27. THE INFORMATION ON THIS PLAN IS INTENDED TO BE USED AS A GUIDELINE FOR THE CONTRACTOR AND SUBCONTRACTORS TO COMPLY WITH THE REQUIREMENTS OF THE STATE WATER RESOURCES CONTROL BOARD. FIELD CONDITIONS MAY NECESSITATE MODIFICATIONS TO THIS PLAN.
28. NO ONSITE FUELING SHALL TAKE PLACE.
29. SEAL OR SKIRT BETWEEN TRAILER & GRADING TO PREVENT EXPOSURE TO DRAIN.
30. STRAW WATTLES INSTALLED ON A SLOPE SHALL CONFORM TO THE GUIDELINES SPECIFIED BY THE UNITED STATES ENVIRONMENTAL PROTECTION AGENCY NATIONAL POLLUTANT DISCHARGE ELIMINATION SYSTEM BEST MANAGEMENT PRACTICES.
31. EROSION RESISTANT VEGETATION SHOULD BE MAINTAINED ON THE FACE OF ALL SLOPES.
32. CONTRACTOR SHALL REFER TO THE PROJECT STORM WATER POLLUTION PLAN (SWPPP) FOR ALL PRE AND POST CONSTRUCTION EROSION CONTROL MEASURES AND BEST MANAGEMENT PRACTICES (BMPs).
33. ALL BASINS SHALL BE HYDROSEEDED IN ACCORDANCE TO THE PROJECT SWPPP.
34. CONTRACTOR SHALL INSTALL DRAIN INLET PROTECTION FOR ALL CATCH BASINS LOCATED IN THE VICINITY OF WORK. THIS INCLUDES ANY CATCH BASINS LOCATED IN THE PUBLIC RIGHT-OF-WAY, AS WELL AS ANY ONSITE CATCH BASINS.
35. CONTRACTOR SHALL ENSURE THAT CONSTRUCTION ACTIVITIES DO NOT DEPOSIT SEDIMENT ON TO THE PUBLIC ROADWAY, SIDEWALKS AND GUTTERS.
36. CONTRACTOR SHALL USE STREET SWEEPING OR OTHER DRY SWEEPING METHODS, AS NECESSARY, TO REMOVE CONSTRUCTION RELATED SEDIMENT FROM PAVEMENT IN THE PROJECT AREA AND PROJECT ROADWAY.
37. CONTRACTOR SHALL SCHEDULE WORK FOR DRY WEATHER DAYS WHEN NO RAIN IS IN THE IMMEDIATE FORECAST.

PLOTTED: 12/6/2021 16:12 AUTHOR:BH CadApr
DRAWING: T:\20-21\20-20\Cad Development Cad\Cad\C2 Plans\C8.1 - ESC.dwg

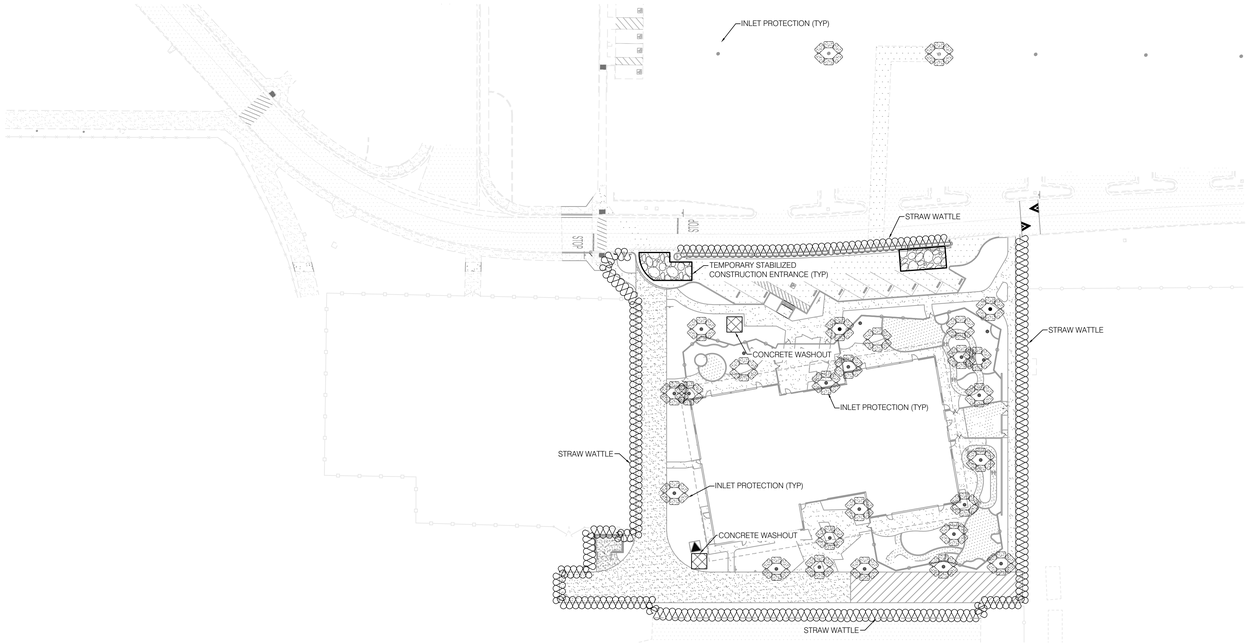

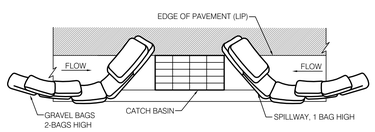

A TYPICAL PROTECTION FOR INLET ON SUMP
NTS

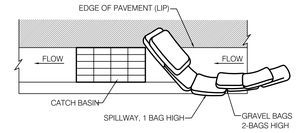

B TYPICAL PROTECTION FOR INLET ON GRADE
NTS

NOTES:

1. INTENDED FOR SHORT-TERM USE.
2. USE TO INHIBIT NON-STORM WATER FLOW.
3. ALLOW FOR PROPER MAINTENANCE AND CLEAN UP.
4. BAGS MUST BE REMOVED AFTER ADJACENT OPERATION IS COMPLETED.
5. NOT APPLICABLE IN AREAS WITH HIGH SILTS AND CLAYS WITHOUT FILTER FABRIC.

DI PROTECTION TYPE 3 - GRAVEL BAG

THE GRAVEL BAG BARRIER (TYPE 3) IS SHOWN IN THE FIGURES. FLOW FROM A SEVERE STORM SHOULD NOT OVERTOP THE CURB. IN AREAS OF HIGH CLAY AND SILTS, USE FILTER FABRIC AND GRAVEL AS ADDITIONAL FILTER MEDIA. GRAVEL BAGS SHOULD BE USED DUE TO THEIR HIGH PERMEABILITY.

1. USE SAND BAG MADE OF GEOTEXTILE FABRIC (NOT BURLAP) AND FILL WITH 0.75 IN. ROCK OR 0.25 IN. PEA GRAVEL.
2. CONSTRUCT ON GENTLY SLOPING STREET.
3. LEAVE ROOM UPSTREAM OF BARRIER FOR WATER TO POND AND SEDIMENT TO SETTLE.
4. PLACE SEVERAL LAYERS OF SAND BAGS - OVERLAPPING THE BAGS AND PACKING THEM TIGHTLY TOGETHER.
5. LEAVE GAP OF ONE BAG ON THE TOP ROW TO SERVE AS A SPILLWAY. FLOW FROM A SEVERE STORM (E.G., 10 YEAR STORM) SHOULD NOT OVERTOP THE CURB.
6. THIS DETAIL IS TO BE USED ON EXISTING STREETS WHERE SILTED FLOW IS TO BE INTERCEPTED (CAUGHT) PRIOR TO ENTERING THE STORM DRAIN SYSTEM. SANDBAGS CAN ALSO BE USED WHEN THE ROUGH GRADED STREETS HAVE POURED INPLACE CONCRETE SURROUNDING THE INLET TO CREATE A 'FLOW LINE' WHERE A DAM CAN BE ACHIEVED TO PROTECT THE STORM SYSTEM FROM THE INFLOW OF SEDIMENT.

C DI PROTECTION - TYPE 3
NTS

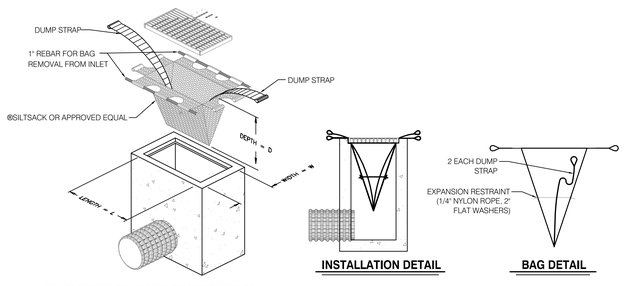

INSTALLATION DETAIL

BAG DETAIL

D TYPICAL SILTSACK CONSTRUCTION
NTS

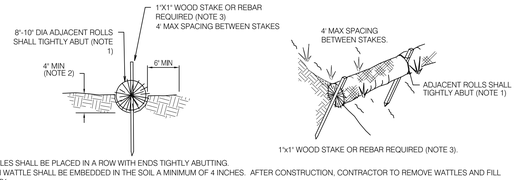

NOTES:

1. WATTLES SHALL BE PLACED IN A ROW WITH ENDS TIGHTLY ABUTTING.
2. EACH WATTLE SHALL BE EMBEDDED IN THE SOIL A MINIMUM OF 4 INCHES. AFTER CONSTRUCTION, CONTRACTOR TO REMOVE WATTLES AND FILL CAVITY.
3. WATTLES SHALL BE SECURELY ANCHORED IN PLACE BY TWO STAKES OR REBARS DRIVEN THROUGH THE WATTLES. THE FIRST STAKE IN EACH WATTLE SHALL BE DRIVEN TOWARD THE PREVIOUSLY LAID WATTLE TO FORCE THE WATTLES TOGETHER.
4. THE DIKE SHALL BE INSPECTED AFTER EACH STORM, AND REPAIR OR REPLACEMENT SHALL BE MADE PROMPTLY AS NEEDED. THE WATTLES SHALL BE REMOVED ONCE THEY HAVE SERVED THEIR PURPOSE SO AS NOT TO BLOCK OR IMPEDE STORM FLOW OR DRAINAGE.

E STRAW WATTLE DETAIL
NTS

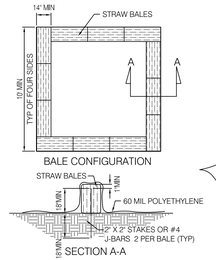

BALE CONFIGURATION

SECTION A-A

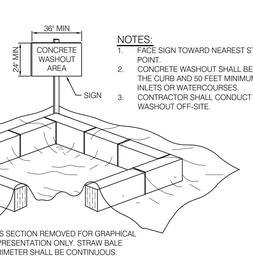

NOTES:
1. FACE SIGN TOWARD NEAREST STREET OR ACCESS POINT.
2. CONCRETE WASHOUT SHALL BE LOCATED BEHIND THE CURB AND 50 FEET MINIMUM FROM DRAINAGE INLETS OR WATERCOURSES.
3. CONTRACTOR SHALL CONDUCT ALL CONCRETE WASHOUT OFF-SITE.

THIS SECTION REMOVED FOR GRAPHICAL REPRESENTATION ONLY. STRAW BALE PERIMETER SHALL BE CONTINUOUS.

F CONCRETE WASHOUT
NTS

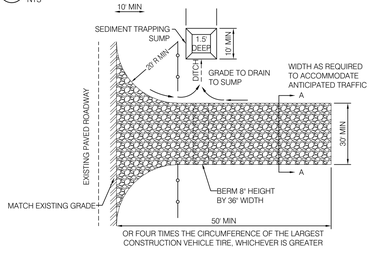

NOTE:
CONSTRUCT SEDIMENT BARRIER AND CHANNELIZE RUNOFF TO SEDIMENT TRAPPING DEVICE

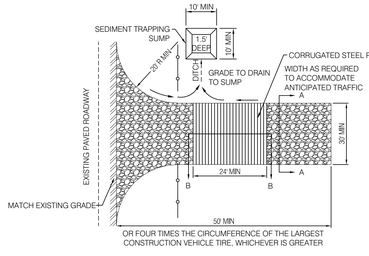

NOTE:
CONSTRUCT SEDIMENT BARRIER AND CHANNELIZE RUNOFF TO SEDIMENT TRAPPING DEVICE

G1 PLAN (OPTION 1)
NTS

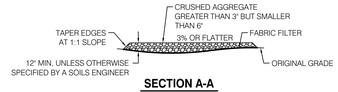

SECTION A-A
NTS

G2 PLAN (OPTION 2)
NTS

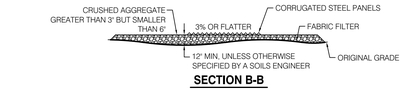

SECTION B-B
NTS

TEMPORARY STABILIZED CONSTRUCTION ENTRANCE

DESIGN AND CONSTRUCTION SPECIFICATIONS:

1. THE TEMPORARY STABILIZED CONSTRUCTION ENTRANCE SHALL BE CONSTRUCTED IN STRICT ACCORDANCE WITH THE PLANS AND SPECIFICATIONS OF THE LATEST EDITION OF THE CALIFORNIA STORMWATER HANDBOOK, DETAIL TC-1. WHERE THERE IS A DISCREPANCY BETWEEN THIS DETAIL AND THE CALIFORNIA STORMWATER HANDBOOK, THE HANDBOOK SHALL GOVERN.
2. CONTRACTOR SHALL CONSTRUCT A STABILIZED CONSTRUCTION ENTRANCE AT EACH ENTRANCE TO THE PROJECT SITE AND SHALL BE CONSTRUCTED ON LEVEL GROUND.
3. THE MATERIAL FOR CONSTRUCTION OF THE PAD SHALL BE 3 TO 6 INCH DIA. STONE.
4. THE THICKNESS FOR THE PAD SHALL NOT BE LESS THAN 12 INCHES OR AS RECOMMENDED BY SOILS ENGINEER.
5. THE WIDTH OF THE PAD SHALL NOT BE LESS THAN 30' OR THE FULL WIDTH OF ALL POINTS OF INGRESS OR EGRESS, WHICHEVER IS GREATER.
6. THE LENGTH OF THE PAD SHALL BE AS REQUIRED, BUT NOT LESS THAN 50 FEET.
7. THE ENTRANCE SHALL BE MAINTAINED IN A CONDITION THAT WILL PREVENT TRACKING OR FLOWING OF SEDIMENT ONTO PUBLIC RIGHT-OF-WAY. THIS MAY REQUIRE PERIODIC TOP DRESSING WITH ADDITIONAL STONE AS CONDITIONS DEMAND, AND REPAIR AND/OR CLEAN OUT ANY MEASURES USED TO TRAP SEDIMENT. ALL SEDIMENT SPILLED, DROPPED, WASHED OR TRACKED ONTO PUBLIC RIGHT-OF-WAY SHALL BE REMOVED IMMEDIATELY.
8. WHEN NECESSARY, WHEELS SHALL BE CLEANED TO REMOVE SEDIMENT PRIOR TO ENTRANCE ONTO PUBLIC RIGHT-OF-WAY. WHEN WASHING IS REQUIRED, IT SHALL BE DONE ON AN AREA STABILIZED WITH CRUSHED STONE THAT DRAINS INTO AN APPROVED SEDIMENT TRAP, SEDIMENT BASIN, OR SEDIMENT SWALE. ALL SEDIMENT SHALL BE PREVENTED FROM ENTERING ANY STORM DRAIN, DITCH, OR WATERCOURSE THROUGH USE OF GRAVEL BAGS, GRAVEL BOARDS, OR OTHER APPROVED METHODS.
9. CONTRACTOR TO REMOVE AND DISPOSE OF STABILIZED CONSTRUCTION ENTRANCE UPON COMPLETION OF CONSTRUCTION.
10. CONSTRUCTION AND MAINTENANCE SHALL BE IN ACCORDANCE WITH THE 2003 CALIFORNIA STORMWATER BMP HANDBOOK.

G TEMPORARY STABILIZED CONSTRUCTION ENTRANCE
NTS

COPYRIGHT 2021 NORTHSTAR ENGINEERING GROUP, INC

Division of the State Archi
APPROVED
DIV. OF THE STATE ARCHITECT
APP: 02-119316 INC:
REVIEWED FOR
SS☐ FLS☐ ACS☑
DATE: 03/24/2022

Office of the State Fire Marshal

OFFICE OF THE STATE FIRE MARSHAL
APPROVED FIRE AND PANIC ONLY
03/14/22
21-0498
Approval of this plan does not authorize or approve any omission or deviation from applicable regulations. Final approval is subject to field inspection. One set of approved plans shall be available on the project site at all times.

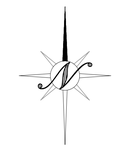

LEGEND

	STRAW WATTLE (SEE DETAIL "E")
	CONCRETE WASHOUT AREA (SEE DETAIL "F")
	INLET PROTECTION (SEE DETAILS "A", "B", C, AND "D") SHALL BE PLACED AROUND ALL CATCH BASINS WITHIN THE PROJECT DRAINAGE LIMITS, INCLUDING BUT NOT LIMITED TO ALL LANDSCAPE DRAINAGE. ALSO, INLET PROTECTION SHALL BE PLACED AT THE FIRST INLET DOWNSTREAM FROM THE PROJECT SITE (ON EITHER DIRECTION).
	TEMPORARY STABILIZED CONSTRUCTION ENTRANCE (SEE DETAIL "G") TO BE DETERMINED BY CONTRACTOR IN FIELD.

CSUS CHILD DEVELOPMENT CENTER

CALIFORNIA STATE UNIVERSITY, STANISLAUS
ONE UNIVERSITY CIRCLE
TURLOCK, CA 95382

ehdd.

PIER 1, BAY 2
THE EMBARCADERO
SAN FRANCISCO, CA 94111

INFO@EHDD.COM
+1 415-285-9193

Consultant

NorthStar Engineering Group, Inc.
* CIVIL ENGINEERING * SURVEYING * PLANNING *
620 12th Street Modesto, CA 95354
(209) 524-3525 Phone (209) 524-3526 Fax

Stamp

Printing

	Date
95% CONSTRUCTION DOCUMENTS	06.25.2021
PERMIT SET	08.16.2021
PERMIT SET - DSA V2	12.15.2021
PERMIT SET - SFM	12.21.2021

Revisions and Description | Date

Scale
As Shown

Drawn by
BEC

EHDD Job Number
20020

Sheet Title
EROSION CONTROL PLAN, NOTES AND DETAILS

Sheet Number
C8.1 V3

CHILD DEVELOPMENT CENTER

California State University Stanislaus — Turlock, CA

Landscape Plans

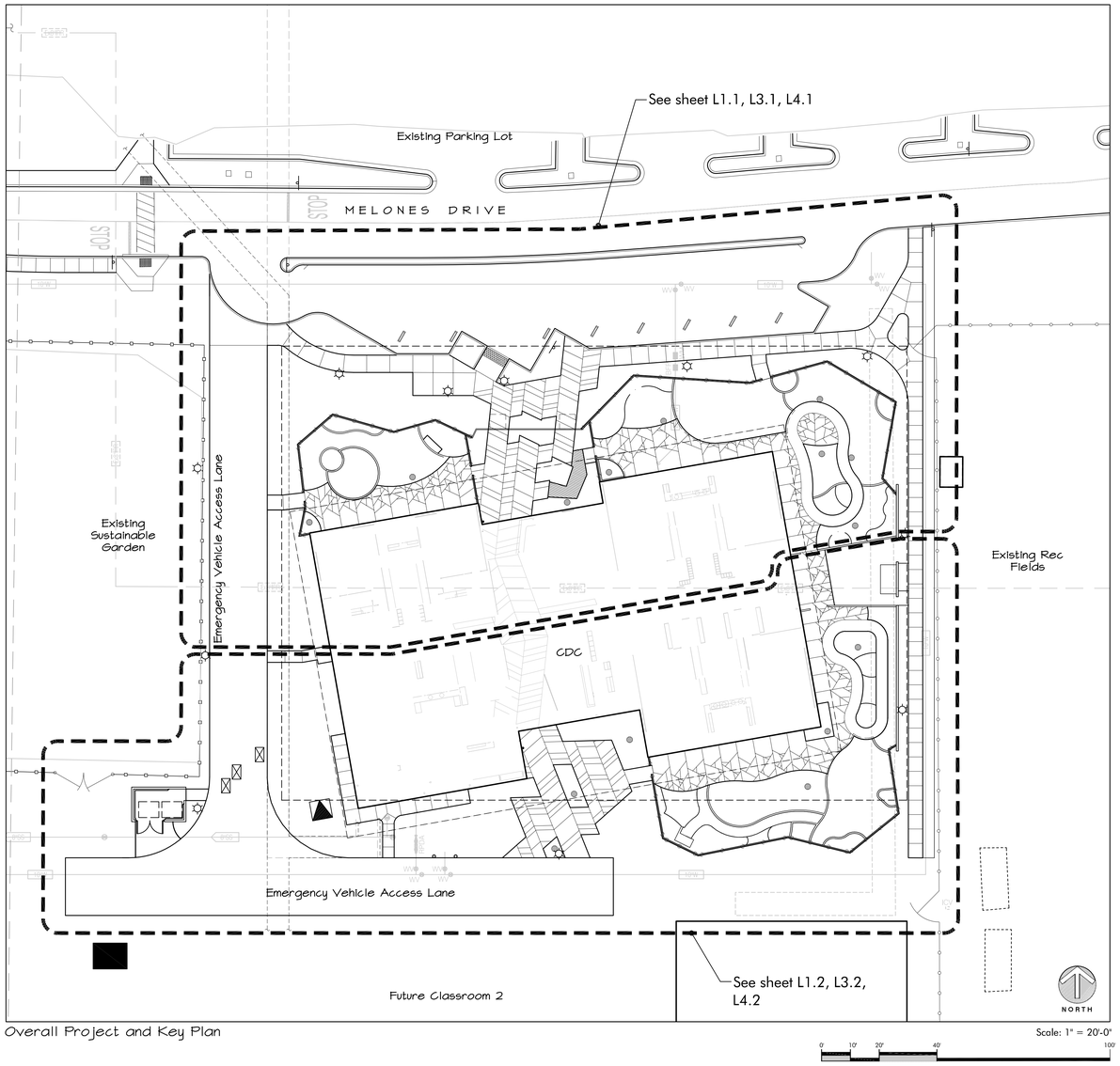

Overall Project and Key Plan

Scale: 1" = 20'-0"

0' 10' 20' 40' 100'

Sheet Index

L1.0	Landscape Cover Sheet
L1.1	Construction Plan
L1.2	Construction Plan
L2.1	Construction Details
L2.2	Construction Details
L2.3	Construction Details
L2.4	Construction Details
L2.5	Construction Details
L3.1	Irrigation Plan
L3.2	Irrigation Plan
L4.1	Planting Plan
L4.2	Planting Plan
L6.1	Landscape Details
L7.1	WELO Notes and Calculations

Abbreviation List

ADA	American with Disabilities Act
CJ	Control Joint
CMU	Concrete masonry unit
CYRD	Cubic yard
EJ	Expansion Joint
EQ	Equal
FT	Foot (Feet)
GAL	Gallon
GPM	Gallons per minute
IN	Inch
LB	Pound
MAX	Maximum
MIN	Minimum
NCN	No Common Name
OC	On Center
PA	Planting Area
PSI	Pounds per square inch
PT	Pressure Treated
R	Radius
SCH	Schedule
SF	Square feet
TYP	Typical
VIF	Verify in Field
WWM	Welded wire mesh

811 Know what's below. Call before you dig. Dial 811 or 800-227-2600

Project Location

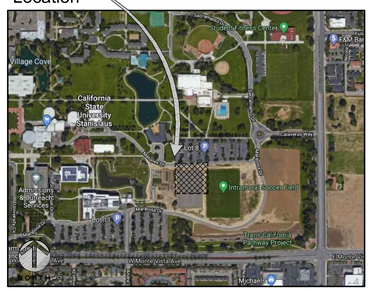

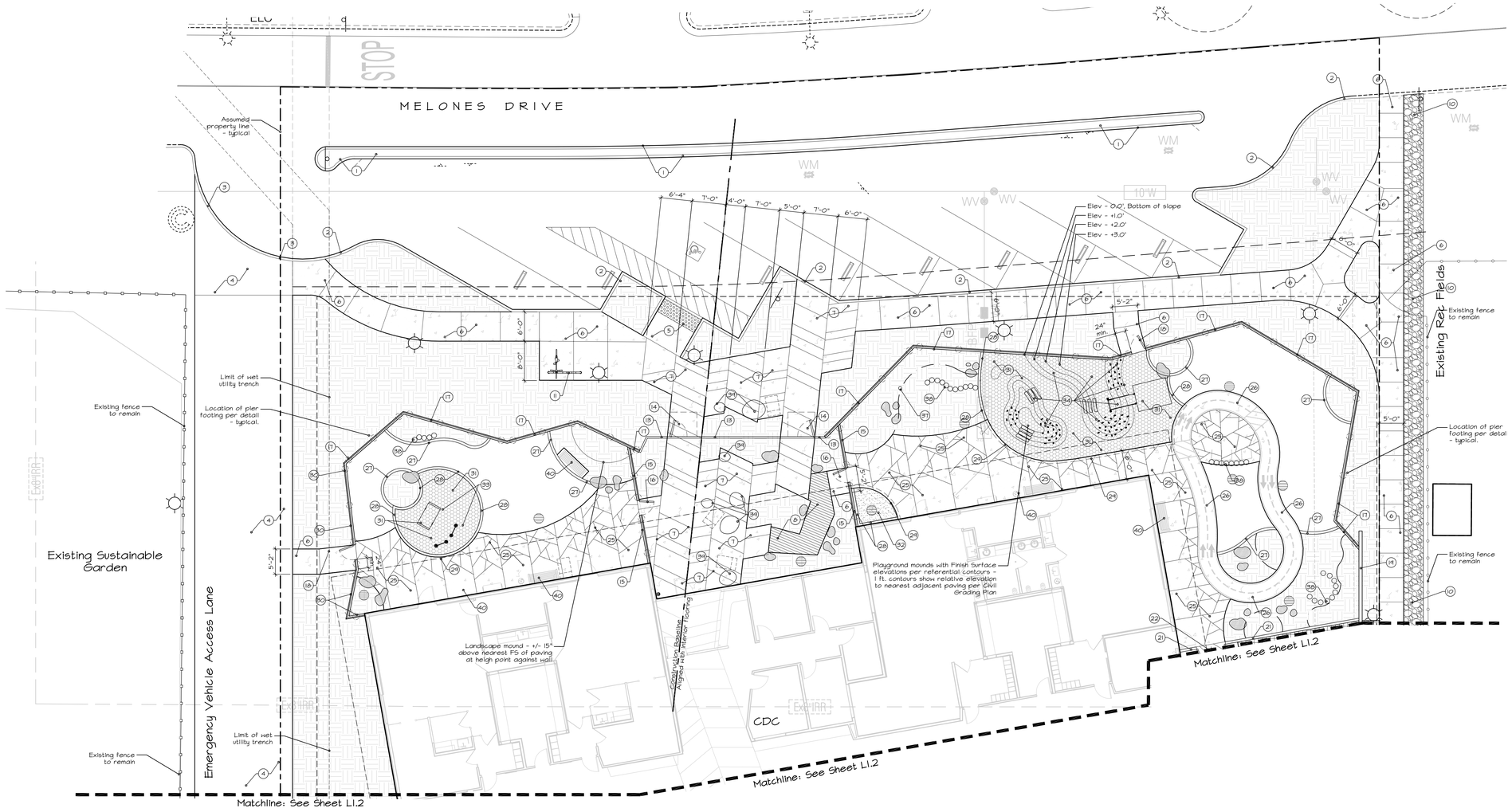

Wood Structure Notes

1. Wood structures such as fences, colonnades, trellis, etc. shall be installed to meet the design intent of the plans and details. The contractor shall submit shop drawings for review and approval by the owner and/or landscape architect.
2. Sizes of components as shown on the plans and details are referential and shall be installed in commonly avail. sizes.
3. Wood assemblies shall not be attached to buildings unless specifically shown on the landscape or architectural plans.
4. Contractor shall include all posts, beams, joists, rafters, rails, pickets, brackets, fasteners, etc. (whether shown on the details or not) as needed to install the elements per the intent of the plans and details.
5. Fasteners shall be ornamental iron or countersunk and painted as shown on the plans and details. No fasteners shall be located where they can catch or injure someone.
6. All components shall be completely painted with one coat primer and min. two coats final exterior grade paint or stain as specified. Color coat to completely cover all visible portions of wood structure. Ornamental fasteners may be left in their standard color, or painted a different color. Coordinate with Landscape Architect prior to painting. Color and finish per the plans or to be selected by the owner and/or landscape architect.
7. Attachment at footing to be installed per the plan or details with secure connection to meet CBC and local building codes.

Tubular Steel Notes

1. Contractor shall install the fence, handrails, guard rails, gates, etc. per the design intent of the plans. Contractor shall review the details and plans and shall notify the landscape architect if any modifications are needed for structural reasons.
2. Amenities shall meet all codes and requirements of specific use such as pool fence, guardrail, handrail, etc. If codes conflict with the plans and details, the codes shall take precedence; notify the landscape architect immediately in each case.
3. Contractor shall include all posts, rails, pickets, brackets, fasteners, gate hardware, etc. (whether shown on the details or not) as needed to install the fence per the intent of the plans and details.
4. Sizes of components as shown on the plans and details are referential and shall be installed in commonly avail. sizes. Use prefabricated components to meet the design intent wherever possible unless specifically stated otherwise.
5. Tubular steel amenities shall not be attached to buildings unless specifically shown on the landscape or architectural plans.
6. All welds shall be ground smooth. No fasteners shall be located where they can catch or injure someone.
7. Exposed ends of pipes/tubes and hollow sections shall be sealed with a cap plate and ground smooth unless noted otherwise.
8. All components shall be completely painted with two coats rust-resistant primer and minimum one coat finish semi-gloss rust-resistant enamel. All galvanized metal to receive a vinegar or diluted muriatic acid wash prior to priming. Color coat to completely cover all visible portions, including underside of railings. Color per the plans or to be selected by the owner and/or landscape architect.
9. Gates to meet ADA and Code exit requirements including exit bar ("panic bar") hardware, self-closing hinges and kick-plate. Exit bar shall be for exterior use equal to model V40NM by Detex and shall include all accessory hardware for a complete installation. Hinges shall be for exterior use equal to Tru-Close self-closing hinges use, TruClose.net, size as required by gate weight and use.
10. For projects with gate operators the gate operator installer shall be properly licensed and in good-standing with the State of California (license C-61, D-28).

General Construction Notes

1. All dimensions are taken from curb face, building face, or edge of paving, unless otherwise noted on the plan. The dimensions are shown for approximate line and all radii and curves are to have continuous and smooth transitions without abrupt changes or bends.
2. All forms and alignment of paving shall be reviewed and approved by the landscape Architect and/or owner prior to pouring (provide a minimum of 48 hours notice).
3. For site grading see Civil Engineer's plans.
4. Contractor shall verify location of all utilities prior to construction and shall be liable for all damages incurred.
5. Contractor shall note and install all sleeve locations as noted on the Irrigation Plans prior to installation of paving.
6. All construction and workmanship shall conform to the applicable edition of the California Building Code and all other governing codes, ordinances, and laws.
7. These notes shall be used in conjunction with the plans and any discrepancies shall be brought to the attention of the Landscape Architect.
8. The contractor must check all dimensions, framing conditions, and the condition of the site prior to commencing with work. The Landscape Architect is to be notified immediately of any discrepancies or deficiencies.
9. Conditions not specifically shown shall be constructed similar to the details for the respective materials.
10. The drawings and specifications represent the finished structure. All bracing, temporary supports, shoring, etc. is the sole responsibility of the contractor.
11. Observation visits to the job site by the Landscape Architect do not include inspection of Construction methods and safety conditions of the worksite. These visits shall not be construed as continuous and detailed inspections.
12. Design, materials, equipment, and products other than those described on the drawings or in the specifications may be considered for use, provided prior approval has been obtained from the owner, Landscape Architect, and applicable governing authority.

Construction Callouts

No.	Detail	Item Description
1	Per Civil	Concrete median per Civil Engineer's plans.
2	Per Civil	Concrete vertical curb per Civil Engineer's plans.
3	Per Civil	Concrete rolled curb per Civil Engineer's plans.
4	Per Civil	Emergency vehicle access lane paving per Civil Engineer's Plans.
5	Per Civil	Curb ramp and truncated domes per Civil Engineer's plans and applicable CBC accessibility code requirements.
6	A and B, Sheet L2.1	Natural gray medium broom finish concrete paving. Install saw cut score joints in enhanced pattern as shown on plans. Provide expansion joints as shown on plans. Expansion joints shall be maximum 20' on center.
7	A-C, Sheet L2.1	Colored concrete with light sandblast finish by means of top-surface finish retarder such as Topcast or approved equal. Color to be integrally mixed pigment by Davis Colors. Two colors to be provided in random pattern as shown in detail. Colors to be selected. Provide product cut sheets and mix ratio for approval. Install saw cut score joints in enhanced pattern as shown on plans. Provide expansion joints as shown on plans. Expansion joints shall be maximum 20' on center.
8	D, Sheet L2.1	At grade wood deck to be installed flush with adjacent paving.
9	E, Sheet L2.1	Install stabilized decomposed granite paving. 'Stabilizer' soil binder by Stabilizer Solutions, (800)336-2468, www.stabilizersolutions.com. Mix ratio shall be per manufacturer's recommendations. Install per manufacturer's recommendations. Granite color: tan. Submit product information and stabilizer mix ratio for approval.
10	F, Sheet L2.1	3" layer of 3/4" chip aggregate at maintenance pathway.
11	G, Sheet L2.1	Surface mount bike rack.
12	H-N, Sheet L2.1	Split Face GMU trash enclosure with corrugated steel access doors.
13	O, Sheet L2.1	Low ornamental fence at entry. Tube steel post and frame with laser cut architectural metal panels
14	A, Sheet L2.2	Entry gate at low entry fence. Gate to match fence.
15	B and C, Sheet L2.2	Play yard enclosure fence and wall system at North entrance. Uniform base wall height to match building wall below window.
16	D, Sheet L2.2	Single leaf egress gate at north entrance play yard enclosure fence.
17	F, Sheet L2.2 and A-C, Sheet L2.3	Play yard enclosure fence and wall system. Tube steel fence system on top to be consistent 48" height, base wall varies from 12"-60". Portions at play mounds have retaining condition. ALTERNATE: Provide Alternate pricing for tube steel fence portion of fence system - Base wall has no alternate. Provide line item in bid to replace tube steel fence and pickets with pre-manufactured fence system by Fortress Building Products - Architectural fence - Flat Top/Flat Bottom two rail panels with manufacturer's 2.5" posts and pressed dome caps. Install per manufacturer's specifications
18	D and E, Sheet L2.2	Single leaf egress and Fire access gate at play yard enclosure fence.
19	H, L2.2	5'-6" tall CMU wall with precast concrete cap and stucco veneer to match the building.
20	F, L2.3	Double leaf maintenance access and egress gate at full height wall. Gate design to match tube steel fence with vertical pickets - see Detail G L2.2 for reference
21	E, Sheet L2.3	Low tube steel separation fence at shared garden.
22	F, Sheet L2.3	Double leaf gate at low tube steel separation fence. Gate to match fence design. Single leaf to be equipped with proper egress hardware. Second leaf to have heavy duty cane bolt to be used for maintenance access.
23	G, Sheet L2.3	8" tall raised garden bed
24	A, Sheet 12.4	12" tall raised garden bed with built in bench
25	A and B, Sheet L2.1	Natural gray medium broom finish concrete paving. Install saw cut score joints in enhanced pattern as shown on plans. Provide expansion joints as shown on plans. Expansion joints shall be maximum 20' on center.
26	A and B, Sheet L2.1 and B, Sheet L2.4	Colored concrete bike path with medium sandblast finish by means of top-surface finish retarder such as Topcast or approved equal. Color to be integrally mixed pigment by Davis Colors. Color to be selected. Provide product cut sheets and mix ratio for approval. Provide troweled score joints at 5' on center and expansion joints at 20' on center. Striping as shown in plan and per typical striping detail
27	G, Sheet L2.4	Concrete mow curb.
28	D or E, Sheet L2.4	Concrete curb edging at play area and sand pit
29	D, Sheet L2.4	Downturn edge of sidewalk around play area.
30	I, Sheet L2.2	Tube steel play yard enclosure fence.
31	D, Sheet L2.4	Poured in place playground surfacing. Surfacing to be Corksen product supplied by SPEC Play - see also detail A-C, Sheet L2.3.
32	E, Sheet L2.4	Play sand. Contractor to provide custom fabric cover with eye hooks in perimeter curb
33	A, Sheet L2.5	Infant Play Yard - Poured in place play surface and equipment by SPEC play equipment. Contact Caroline O'Neal - 650.769.0761.
34	B, Sheet L2.5	Toddler Play Yard - poured in place play surface playground mounds and equipment by SPEC play equipment. Contact Caroline O'Neal - 650.769.0761.
35	C, Sheet L2.5	Preschool Play Yard - poured in place play surface playground mounds and equipment by SPEC play equipment. Contact Caroline O'Neal - 650.769.0761.
36	F, Sheet L2.4	Play hut. Product to be Kompan Robinia Play hut model NRO-custom 8'6"x6'6".
37	G, Sheet L2.4	Farm pump by Boric play. Provide switch for faculty to turn on/off water supply - See Irrigation for water supply
38	H, Sheet L2.4	Natural wood log steps by Columbia Cascade or approved equal
39	I, Sheet L2.4	Precast concrete seating stones - Soma Stones by Concreteworks or approved equal.
40	No Detail	Location for surface mount bench. Bench shown for reference only - FFE
		Landscape Area - see Planting and Irrigation Plans
		Boulders - see Planting Plan

Concrete Joints

- Score joint - see detail A, L2.1
- Expansion joint - see detail A, L2.1
- Cold joint - see detail A, L2.1

NOTE:
Contractor to provide min. 36" square mock-ups of each type of paving color and texture. Sample to be approved by Owner and Landscape Architect prior to pour. Sample to remain on-site as approved standard of quality.

NORTH
Scale: 1" = 10'-0"
0 5' 10' 20'

811 Know what's below. Call before you dig.
Dial 811 or 800-227-2600

Division of the State Architect

APPROVED
DIV. OF THE STATE ARCHITECT
APP: 02-119316 INC:
REVIEWED FOR
SS☐ FLS☐ ACS☑
DATE: 03/24/2022

Office of the State Fire Marshal

OFFICE OF THE STATE FIRE MARSHAL
APPROVED FIRE AND PANIC ONLY
03/14/22
21-0498
Approval of this plan does not authorize or approve any omission or deviation from applicable regulations. Final approval is subject to field inspection. One set of approved plans shall be available on the project site at all times.

CSUS CHILD DEVELOPMENT CENTER

CALIFORNIA STATE UNIVERSITY, STANISLAUS
ONE UNIVERSITY CIRCLE
TURLOCK, CA 95382

ehdd.

PIER 1, BAY 2
THE EMBARCADERO
SAN FRANCISCO, CA 94111

INFO@EHDD.COM
+1 415-285-9193

Consultant

KLA, Inc.
151 N. Norlin St.,
Sonora Ca, 95370
(209)532-2856
www.kla-ca.com

Stamp

LICENSED LANDSCAPE ARCHITECT
M. B. HARRIS
03.31.2023
Renewal Date
12.06.2021
Date
STATE OF CALIFORNIA

Printing	Date
95% CONSTRUCTION DOCUMENTS	06.25.2021
PERMIT SET	08.16.2021
PERMIT SET - DSA V2	12.15.2021
PERMIT SET - SFM	12.21.2021

Revisions and Description	Date

Scale
1" = 10'-0"

Drawn by
MBH

EHDD Job Number
KLA 20-2266

Sheet Title
Construction Plan

Sheet Number
L1.1 V3

Play Area and Equipment Notes

1. The plans, notes, and details shall in no way supersede play warranty or code requirements. Code and manufacturer requirements shall always take precedence over these plans.
2. The play equipment shall comply with the manufacturer and model number as specifically called out on the plans. Play equipment has been specified per the specific size of the play area. No substitutions shall be made without the express approval of the owner and/or landscape architect.
3. The contractor shall verify, prior to installation, that the play equipment and required fall zones fit within the play area surfacing and depth of surfacing (for cushioning) has been met. Utilities shall be clear of all footings and supports.
4. The contractor shall use a licensed play ground installation company with experience in similar installations and familiar with the unique requirements of play areas. The contractor shall be responsible for ensuring that the play equipment, surfacing, and edging are installed per the project and local code requirements (contractor to verify).
5. The play area surfacing shall be installed per the specifications of the manufacturer. Installation must be certified correct by the manufacturer to ensure that the warranty and insurances are valid. Verify depth of material as needed for specific fall-zones associated with the play equipment.
6. Color combinations shall be selected or approved by the owner and/or landscape architect prior to ordering.
7. Paving shall drain away from play surfacing unless specifically noted on the plans. Floor surfacing shall be installed with a drain at the bottom.
8. ADA access to play surface shall be installed per the plans or local code requirements.
9. Ground Surfaces on accessible routes, clear floor or ground spaces, and turning spaces shall comply with CBC Section 11B-1008.2.6

   11B-1008.2.6.1 Accessibility. Ground surfaces shall comply with ASTM F 1951. Ground surfaces shall be inspected and maintained regularly and frequently to ensure continued compliance with ASTM F 1951.

   11B-1008.2.6.2 Use zones. Ground surfaces located within use zones shall comply with ASTM F 1292 (1999 edition or 2004 edition).

Construction Callouts

No.	Detail	Item Description
1	Per Civil	Concrete median per Civil Engineer's plans.
2	Per Civil	Concrete vertical curb per Civil Engineer's plans.
3	Per Civil	Concrete rolled curb per Civil Engineer's plans.
4	Per Civil	Emergency vehicle access lane paving per Civil Engineer's Plans.
5	Per Civil	Curb ramp and truncated domes per Civil Engineer's plans and applicable CBC accessibility code requirements.
6	A and B, Sheet L2.1	Natural gray medium broom finish concrete paving. Install troweled score joints and expansion joints as shown on plans. Expansion joints shall be maximum 20' on center.
7	A-C, Sheet L2.1	Colored concrete with light sandblast finish by means of top-surface finish retarder such as Topcast or approved equal. Color to be integrally mixed pigment by Davis Colors. Two colors to be provided in random pattern as shown in detail. Colors to be selected. Provide product cut sheets and mix ratio for approval. Install saw cut score joints in enhanced pattern as shown on plans. Provide expansion joints as shown on plans. Expansion joints shall be maximum 20' on center.
8	D, Sheet L2.1	At grade wood deck to be installed flush with adjacent paving.
9	E, Sheet L2.1	Install stabilized decomposed granite paving. 'Stabilizer' soil binder by Stabilizer Solutions, (800)336-2468, www.stabilizersolutions.com. Mix ratio shall be per manufacturer's recommendations. Install per manufacturer's recommendations. Granite color: tan. Submit product information and stabilizer mix ratio for approval.
10	F, Sheet L2.1	3" layer of 3/4" chip aggregate at maintenance pathway.
11	G, Sheet L2.1	Surface mount bike rack.
12	H-N, Sheet L2.1	Split Face CMU trash enclosure with corrugated steel access doors.
13	O, Sheet L2.1	Low ornamental fence at entry. Tube steel post and frame with laser cut architectural metal panels
14	A, Sheet L2.2	Entry gate at low entry fence. Gate to match fence.
15	B and C, Sheet L2.2	Play yard enclosure fence and wall system at North entrance. Uniform base wall height to match building wall below window.
16	D, Sheet L2.2	Single leaf egress gate at north entrance play yard enclosure fence.
17	F, Sheet L2.2 and A-C, Sheet L2.3	Play yard enclosure fence and wall system. Tube steel fence system on top to be consistent 48" height, base wall varies from 12"-60". Portions at play mounds have retaining condition. ALTERNATE: Provide Alternate pricing for tube steel fence portion of fence system - Base wall has no alternate. Provide line item in bid to replace tube steel fence and pickets with pre-manufactured fence system by Fortress Building Products - Architectural fence - Flat Top/Flat Bottom two rail panels with manufacturer's 2.5" posts and pressed dome caps. Install per manufacturer's specifications
18	D and E, Sheet L2.2	Single leaf egress and fire access gate at play yard enclosure fence.
19	H, L2.2	5'-6" tall CMU wall with precast concrete cap and stucco veneer to match the building.
20	F, L2.3	Double leaf maintenance access and egress gate at full height wall. Gate design to match tube steel fence with vertical pickets - see Detail G L2.2 for reference
21	E, Sheet L2.3	Low tube steel separation fence at shared garden.
22	F, Sheet L2.3	Double leaf gate at low tube steel separation fence. Gate to match fence design. Single leaf to be equipped with proper egress hardware. Second leaf to have heavy duty cane bolt to be used for maintenance access.
23	G, Sheet L2.3	8" tall raised garden bed
24	A, Sheet L2.4	12" tall raised garden bed with built in bench
25	A and B, Sheet L2.1	Natural gray medium broom finish concrete paving. Install saw cut score joints in enhanced pattern as shown on plans. Provide expansion joints as shown on plans. Expansion joints shall be maximum 20' on center.
26	A and B, Sheet L2.1 and B, Sheet L2.4	Colored concrete bike path with medium sandblast finish by means of top-surface finish retarder such as Topcast or approved equal. Color to be integrally mixed pigment by Davis Colors. Color to be selected. Provide product cut sheets and mix ratio for approval. Provide troweled score joints at 5' on center and expansion joints at 20' on center. Striping as shown in plan and per typical striping detail
27	G, Sheet L2.4	Concrete mow curb.
28	D or E, Sheet L2.4	Concrete curb edging at play area and sand pit
29	D, Sheet L2.4	Downturn edge of sidewalk around play area.
30	I, Sheet L2.2	Tube steel play yard enclosure fence.
31	D, Sheet L2.4	Poured in place playground surfacing. Surfacing to be Corkeen product supplied by SPEC Play - see also detail A-C, Sheet L2.3.
32	E, Sheet L2.4	Play sand. Contractor to provide custom fabric cover with eye hooks in perimeter curb
33	A, Sheet L2.5	Infant Play Yard - Poured in place play surface and equipment by SPEC play equipment. Contact Caroline O'Neal - 650.769.0761.
34	B, Sheet L2.5	Toddler Play Yard - poured in place play surface playground mounds and equipment by SPEC play equipment. Contact Caroline O'Neal - 650.769.0761.
35	C, Sheet L2.5	Preschool Play Yard - poured in place play surface playground mounds and equipment by SPEC play equipment. Contact Caroline O'Neal - 650.769.0761.
36	F, Sheet L2.4	Play hut. Product to be Kompan Robinia Play hut model NBO-Custom 8X16x16.
37	G, Sheet L2.4	Farm pump by Goric play. Provide switch for faculty to turn on/off water supply - See Irrigation for water supply
38	H, Sheet L2.4	Natural wood log steps by Columbia Cascade or approved equal
39	I, Sheet L2.4	Precast concrete seating stones - Soma Stones by Concreteworks or approved equal.
40	No Detail	Location for surface mount bench. Bench shown for reference only - FFE
		Landscape Area - see Planting and Irrigation Plans
		Boulders - see Planting Plan

Division of the State Architect

APPROVED
DIV. OF THE STATE ARCHITECT
APP: 02-119316 INC:
REVIEWED FOR
SS☐ FLS☐ ACS☑
DATE: 03/24/2022

Office of the State Fire Marshal

OFFICE OF THE STATE FIRE MARSHAL
APPROVED FIRE AND PANIC ONLY
03/14/22
21-0498
Approval of this plan does not authorize or approve any omission or deviation from applicable regulations. Final approval is subject to field inspection. One set of approved plans shall be available on the project site at all times.

CSUS CHILD DEVELOPMENT CENTER

CALIFORNIA STATE UNIVERSITY, STANISLAUS
ONE UNIVERSITY CIRCLE
TURLOCK, CA 95382

ehdd.

PIER 1, BAY 2
THE EMBARCADERO
SAN FRANCISCO, CA 94111

INFO@EHDD.COM
+1 415-285-9193

Consultant

KLA, Inc.
151 N. Norlin St.,
Sonora Ca, 95370
(209)532-2856
www.kla-ca.com

Stamp

LICENSED LANDSCAPE ARCHITECT
03.31.2023
Renewal Date
12.06.2021
Date
STATE OF CALIFORNIA

Printing	Date
95% CONSTRUCTION DOCUMENTS	06.25.2021
PERMIT SET	08.16.2021
PERMIT SET - DSA V2	12.15.2021
PERMIT SET - SFM	12.21.2021

Revisions and Description	Date

Scale
1" = 10'-0"

Drawn by
MBH

EHDD Job Number
KLA 20-2266

Sheet Title
Construction Plan

Sheet Number
L1.2 V3

NORTH
Scale: 1" = 10'-0"
0 5' 10' 20'

811 Know what's below. Call before you dig.
Dial 811 or 800-227-2600

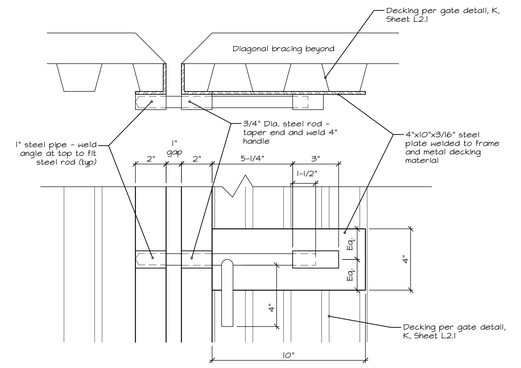

Scale: 3" = 1'-0"
20-2266 SlideLatch.dwg

Slide Latch Detail | M

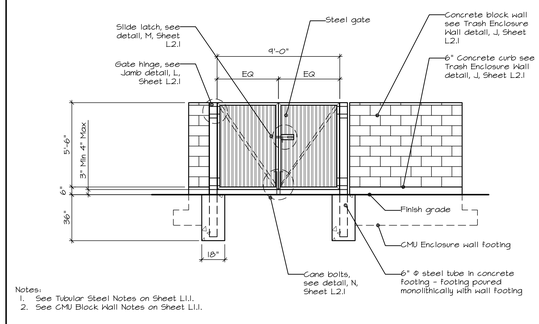

Notes:
1. See Tubular Steel Notes on Sheet L1.1.
2. See CMU Block Wall Notes on Sheet L1.1.

Scale: 1/4" = 1'-0"
20-2266 Trash-ElevationR1.dwg

Trash Enclosure - Elevation | I

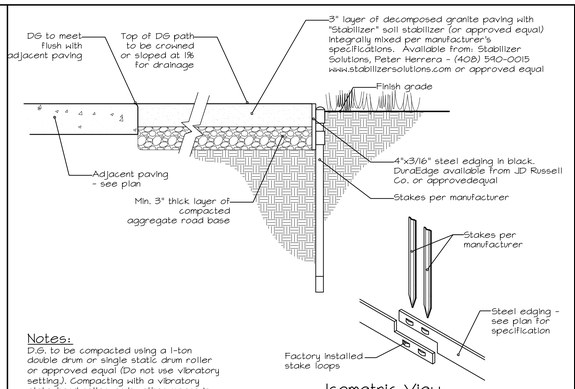

Notes:
D.G. to be compacted using a 1-ton double drum or single static drum roller or approved equal (Do not use vibratory setting). Compacting with a vibratory plate, hand roller, or by other means is not acceptable.

Isometric View
Not to Scale

Scale: 1-1/2" = 1'-0"
20-2266 DecomposedGranite.dwg

Decomposed Granite (DG) Pathway | E

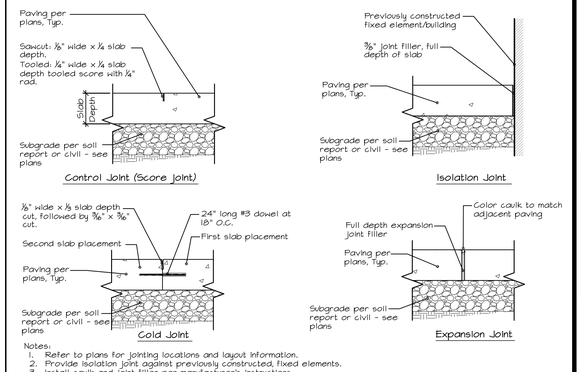

Notes:
1. Refer to plans for jointing locations and layout information.
2. Provide isolation joint against previously constructed, fixed elements.
3. Install caulk and joint filler per manufacturer's instructions.
4. Stone base may occur under paving, see specific paving details.

Scale: 1-1/2" = 1'-0"
05-M3400

Typical Joints | A

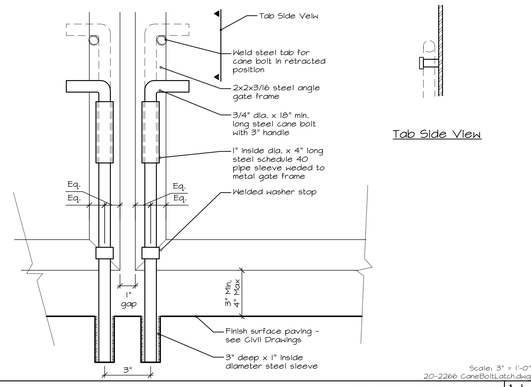

Tab Side View

Scale: 3" = 1'-0"
20-2266 CaneBoltLatch.dwg

Cane Bolt Latch Detail | N

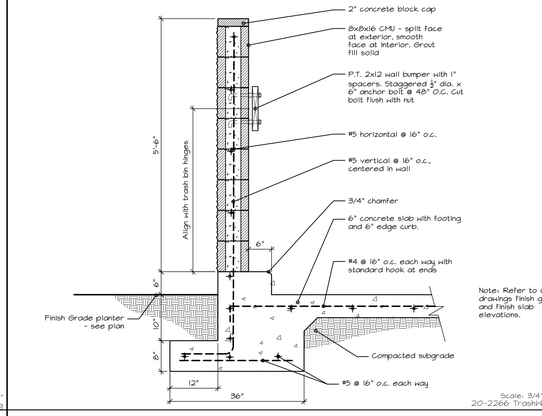

Note: Refer to Civil drawings finish grade and finish slab elevations.

Scale: 3/4" = 1'-0"
20-2266 TrashWall.dwg

Trash Enclosure Wall | J

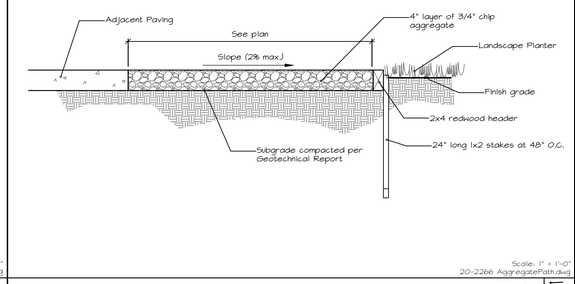

Scale: 1" = 1'-0"
20-2266 AggregatePath.dwg

Aggregate Path | F

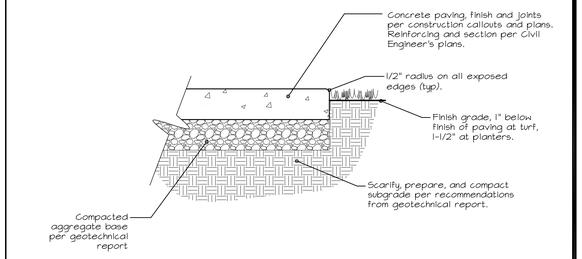

Notes:
1. Color, finish, and texture per construction callouts or finish schedule.
2. See Typical Joint Detail for joints.

Scale: 1-1/2" = 1'-0"
20-2266 PedConcrete.dwg

Pedestrian Concrete | B

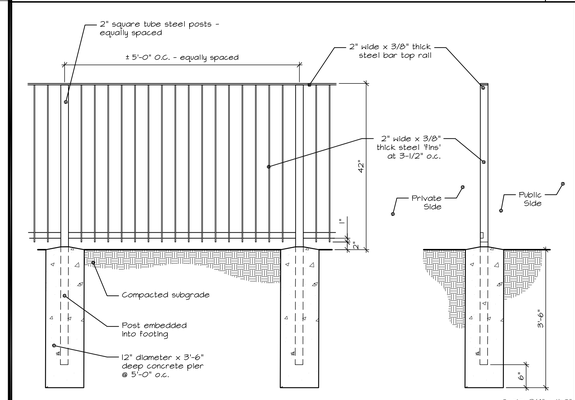

Scale: 3/4" = 1'-0"
20-2266 LowEntryFence.dwg

Low Entry Fence | O

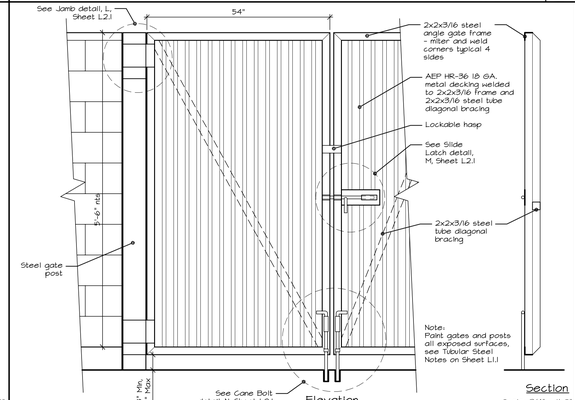

Scale: 3/4" = 1'-0"
20-2266 TrashGate.dwg

Trash Enclosure Gate | K

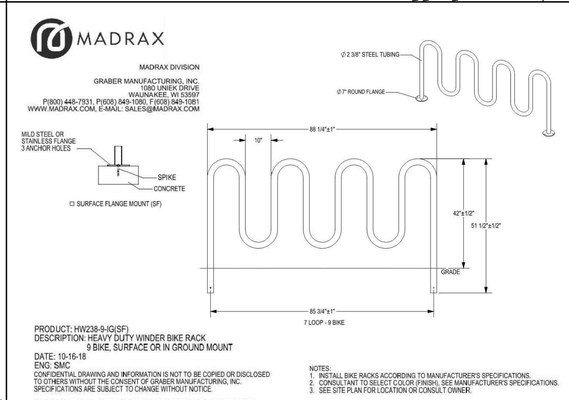

Scale: 3/4" = 1'-0"
20-2266 BikeRack.dwg

Surface Mount Bike Rack | G

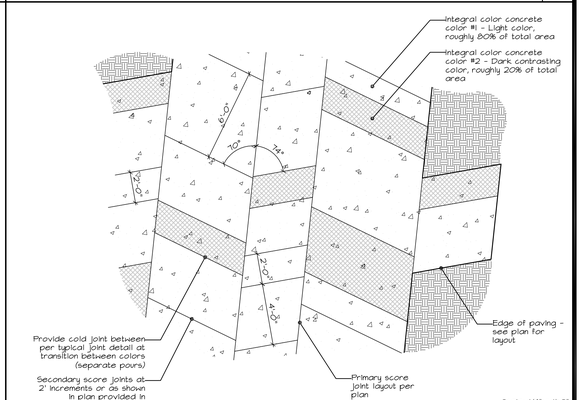

Scale: 1/4" = 1'-0"
20-2266 EnhancedPaving.dwg

Enhanced Paving at Entry | C

Not Used | P

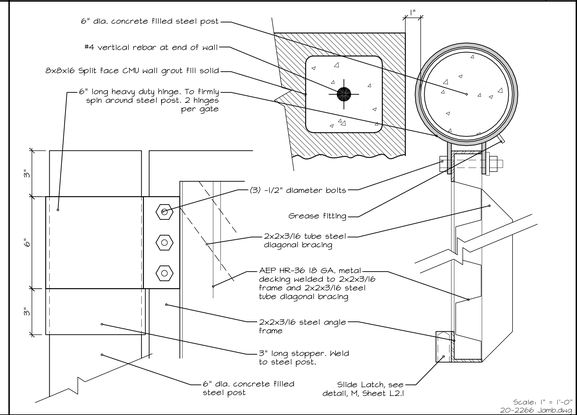

Scale: 1" = 1'-0"
20-2266 Jamb.dwg

Jamb | L

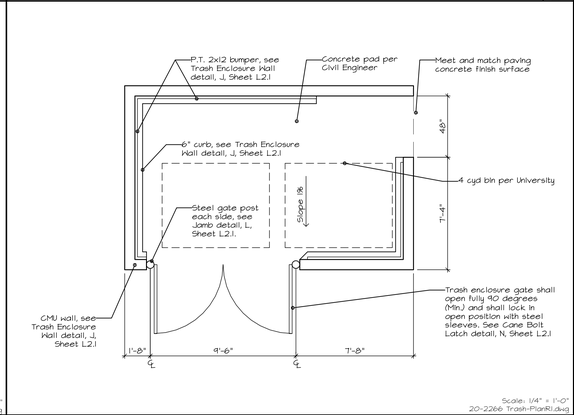

Scale: 1/4" = 1'-0"
20-2266 Trash-PlanR1.dwg

Trash Enclosure - Floor Plan | H

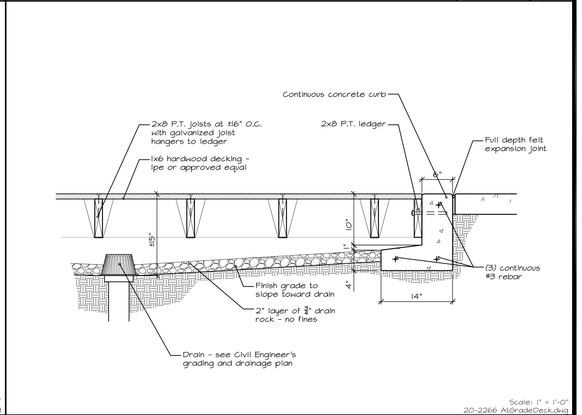

Scale: 1" = 1'-0"
20-2266 AtGradeDeck.dwg

At Grade Wood Deck | D

APPROVED
DIV. OF THE STATE ARCHITECT
APP: 02-119316 INC:
REVIEWED FOR
SS☐ FLS☐ ACS☒
DATE: 03/24/2022

Division of the State Architect

Office of the State Fire Marshal

OFFICE OF THE STATE FIRE MARSHAL
APPROVED FIRE AND PANIC ONLY
03/14/22
21-0498
Approval of this plan does not authorize or approve any omission or deviation from applicable regulations. Final approval is subject to field inspection. One set of approved plans shall be available on the project site at all times.

CSUS CHILD DEVELOPMENT CENTER

CALIFORNIA STATE UNIVERSITY, STANISLAUS
ONE UNIVERSITY CIRCLE
TURLOCK, CA 95382

ehdd.

PIER 1, BAY 2
THE EMBARCADERO
SAN FRANCISCO, CA 94111

INFO@EHDD.COM
+1 415-285-9193

Consultant

KLA LANDSCAPE ARCHITECTURE PLANNING
KLA, Inc.
151 N. Norlin St.,
Sonora Ca, 95370
(209)532-2856
www.kla-ca.com

Stamp

LICENSED LANDSCAPE ARCHITECT
MARK B. HOUSER
03.31.2023
Renewal Date
12.06.2021
Date
STATE OF CALIFORNIA

Printing	Date
95% CONSTRUCTION DOCUMENTS	06.25.2021
PERMIT SET	08.16.2021
PERMIT SET - DSA V2	12.15.2021
PERMIT SET - SFM	12.21.2021

Revisions and Description	Date

Scale
See Details
Drawn by
MBH
EHDD Job Number
KLA 20-2266

Sheet Title
Construction Details

Sheet Number
L2.1 **V3**

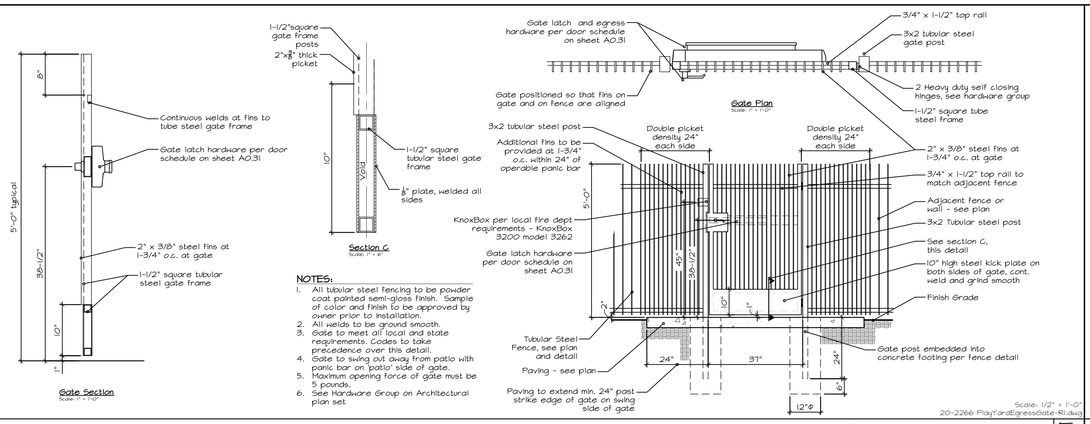

Scale: 1/2" = 1'-0"
20-2266 PlayYardEgressGate-R1.dwg

Play Yard Egress Gate | E

NOTES:
1. All tubular steel fencing to be powder coat painted semi-gloss finish. Sample of color and finish to be approved by owner prior to installation.
2. All welds to be ground smooth.
3. Gate to meet all local and state requirements. Codes to take precedence over this detail.
4. Gate to swing out away from patio with panic bar on 'patio' side of gate.
5. Maximum opening force of gate must be 5 pounds.
6. See Hardware Group on Architectural plan set

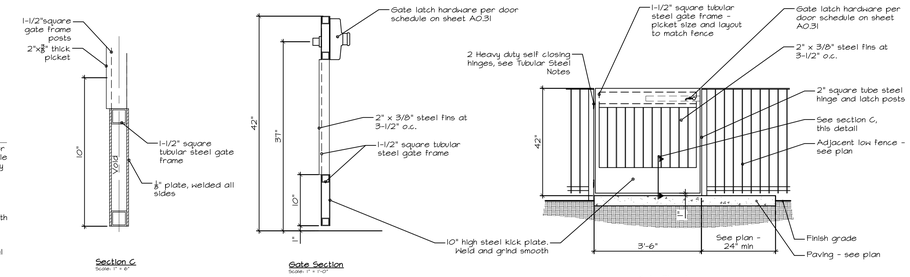

Scale: 1/2" = 1'-0"
20-2266 LowEntryGate.dwg

Low Entry Gate | A

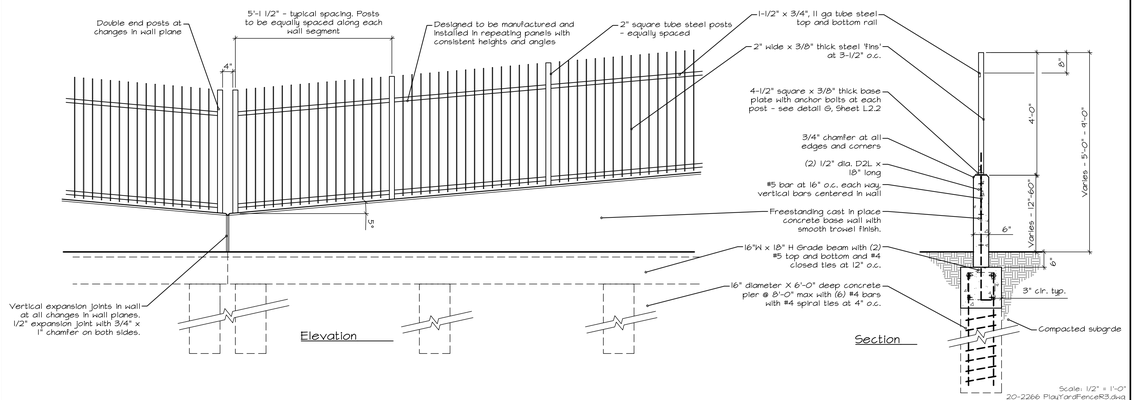

Scale: 1/2" = 1'-0"
20-2266 PlayYardFenceR3.dwg

Play Yard Fence and Wall System | F

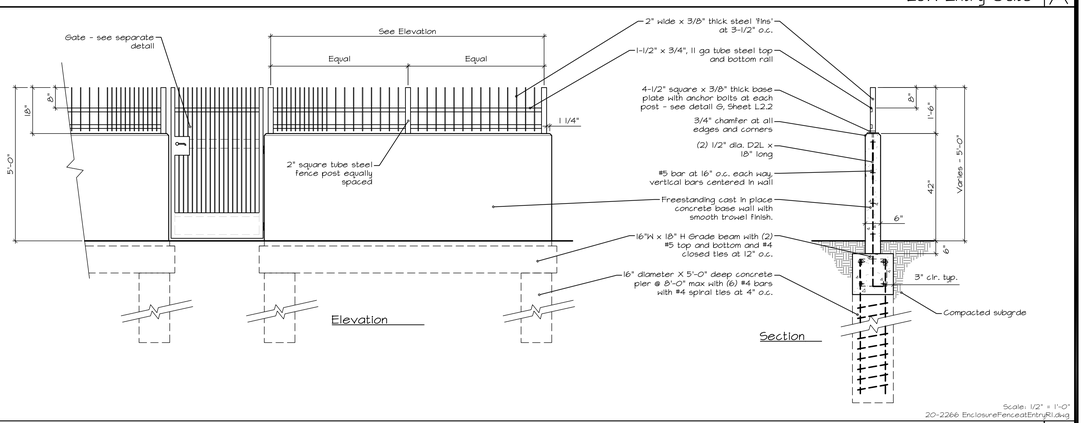

Scale: 1/2" = 1'-0"
20-2266 EnclosureFenceatEntryR1.dwg

Play Yard Fence and Wall System at North Entry | B

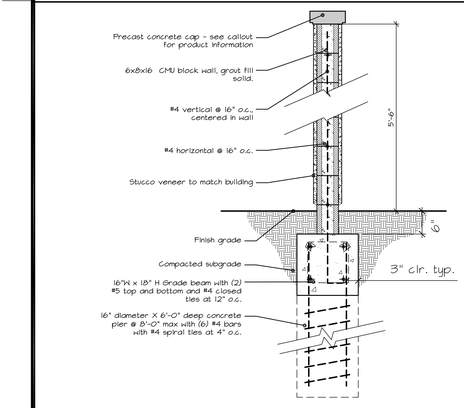

Scale: 3/4" = 1'-0"
20-2266 CMU StuccoR1.dwg

CMU Wall with Stucco Veneer | H

| G

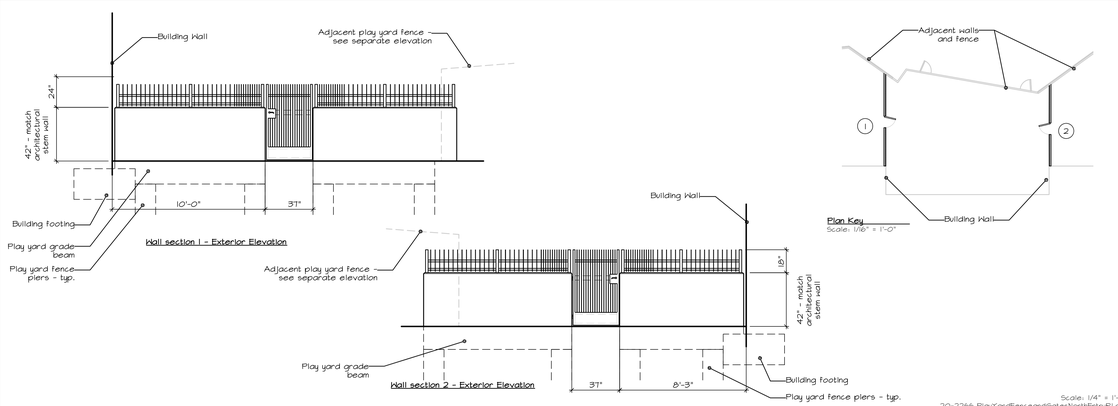

Scale: 1/4" = 1'-0"
20-2266 PlayYardFenceandGatesNorthEntryR1.dwg

Play Yard Fence and Gates North Entry | C

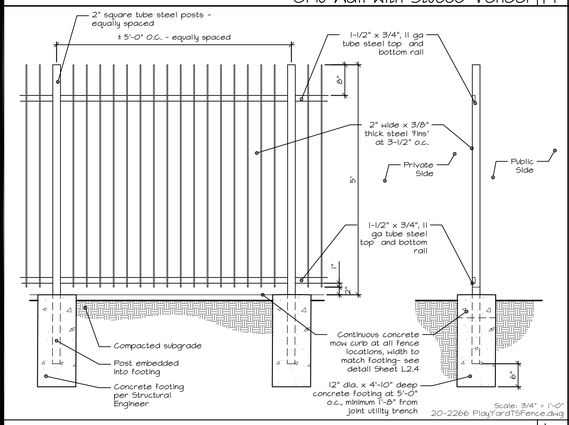

Scale: 3/4" = 1'-0"
20-2266 PlayYardTSFence.dwg

Play Yard Tube Steel Enclosure Fence | I

No Detail

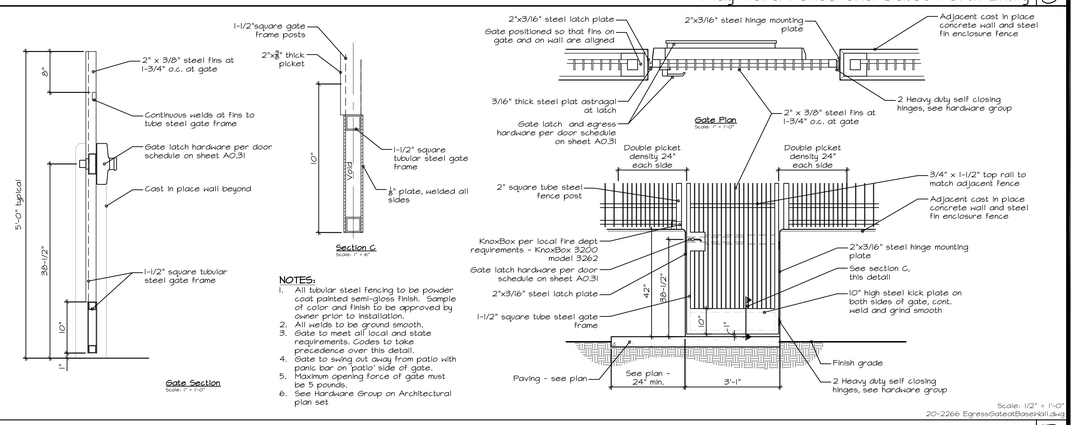

Scale: 1/2" = 1'-0"
20-2266 EgressGateatBaseWall.dwg

Egress Gate at Play Yard Fence with Base Wall Condition | D

Division of the State Architect

APPROVED
DIV. OF THE STATE ARCHITECT
APP: 02-119316 INC:
REVIEWED FOR
SS☐ FLS☐ ACS☒
DATE: 03/24/2022

Office of the State Fire Marshal

OFFICE OF THE STATE FIRE MARSHAL APPROVED FIRE AND PANIC ONLY

03/14/22
21-0498

Approval of this plan does not authorize or approve any omission or deviation from applicable regulations. Final approval is subject to field inspection. One set of approved plans shall be available on the project site at all times.

CSUS CHILD DEVELOPMENT CENTER

CALIFORNIA STATE UNIVERSITY, STANISLAUS
ONE UNIVERSITY CIRCLE
TURLOCK, CA 95382

ehdd.

PIER 1, BAY 2
THE EMBARCADERO
SAN FRANCISCO, CA 94111

INFO@EHDD.COM
+1 415-285-9193

Consultant

KLA LANDSCAPE ARCHITECTURE PLANNING
KLA, Inc.
151 N. Norlin St.,
Sonora Ca, 95370
(209)532-2856
www.kla-ca.com

Stamp

LICENSED LANDSCAPE ARCHITECT
KEVIN L. HARRIS
03.31.2023
Renewal Date
12.06.2021
Date
STATE OF CALIFORNIA

Printing	Date
95% CONSTRUCTION DOCUMENTS	06.25.2021
PERMIT SET	08.16.2021
PERMIT SET - DSA V2	12.15.2021
PERMIT SET - SFM	12.21.2021

Revisions and Description	Date

Scale
See Details
Drawn by
MBH
EHDD Job Number
KLA 20-2266

Sheet Title
Construction Details

Sheet Number
L2.2 V3

Note:
Elevations are provided to communicate overall design intent. This detail is not to be used for member sizing, spacing, etc. Refer to specific details of the various elements included in these elevations for detailed information.

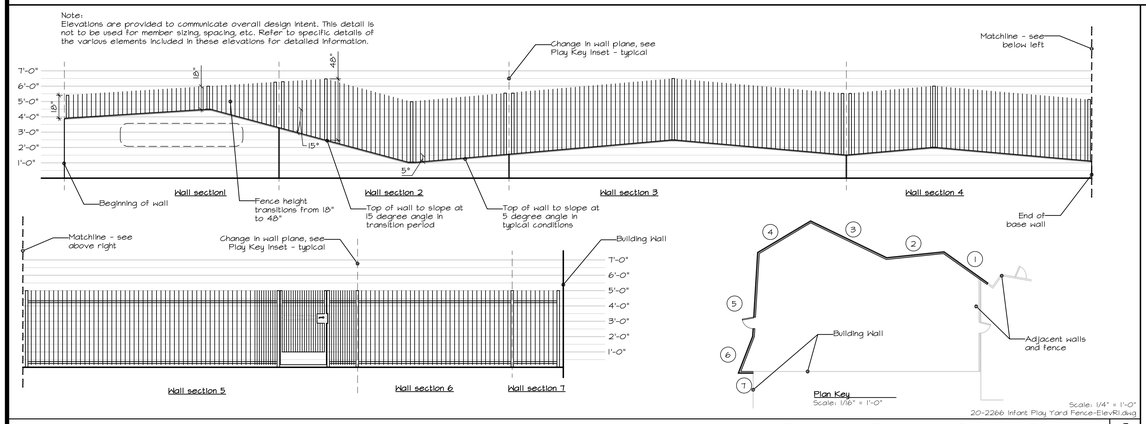

Scale: 1/4" = 1'-0"
20-2266 Infant Play Yard Fence-ElevR1.dwg

Infant Play Yard Enclosure Fence - Elevation | C

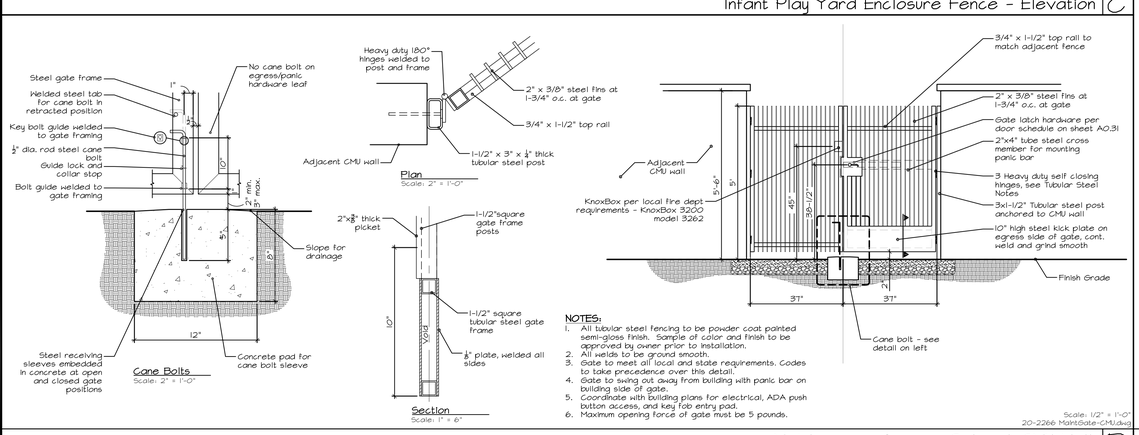

NOTES:
1. All tubular steel fencing to be powder coat painted semi-gloss finish. Sample of color and finish to be approved by owner prior to installation.
2. All welds to be ground smooth.
3. Gate to meet all local and state requirements. Codes to take precedence over this detail.
4. Gate to swing out away from building with panic bar on building side of gate.
5. Coordinate with building plans for electrical, ADA push button access, and key fob entry pad.
6. Maximum opening force of gate must be 5 pounds.

Scale: 1/2" = 1'-0"
20-2266 MaintGate-CMU.dwg

Maintenance Access Gate at CMU Wall | D

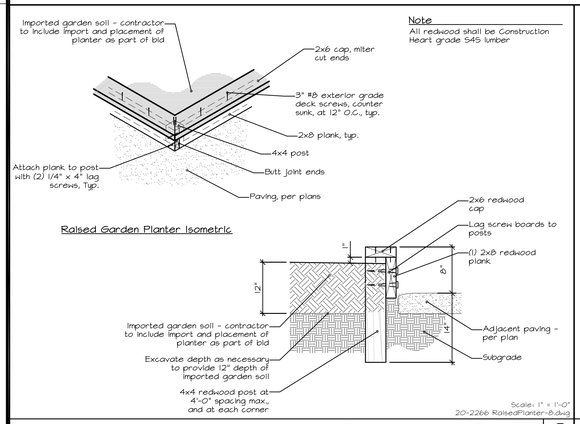

Note
All redwood shall be Construction Heart grade 545 lumber

Scale: 1" = 1'-0"
20-2266 RaisedPlanter-B.dwg

Raised Garden Planter | G

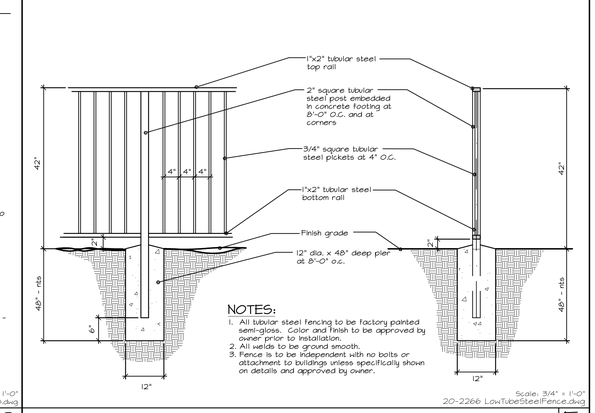

NOTES:
1. All tubular steel fencing to be factory painted semi-gloss. Color and finish to be approved by owner prior to installation.
2. All welds to be ground smooth.
3. Fence is to be independent with no bolts or attachment to buildings unless specifically shown on details and approved by owner.

Scale: 3/4" = 1'-0"
20-2266 LowTubeSteelFence.dwg

Low Tubular Steel Fence | E

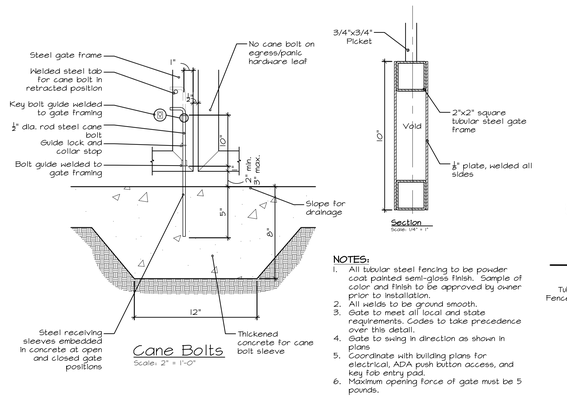

NOTES:
1. All tubular steel fencing to be powder coat painted semi-gloss finish. Sample of color and finish to be approved by owner prior to installation.
2. All welds to be ground smooth.
3. Gate to meet all local and state requirements. Codes to take precedence over this detail.
4. Gate to swing in direction as shown in plans
5. Coordinate with building plans for electrical, ADA push button access, and key fob entry pad.
6. Maximum opening force of gate must be 5 pounds.

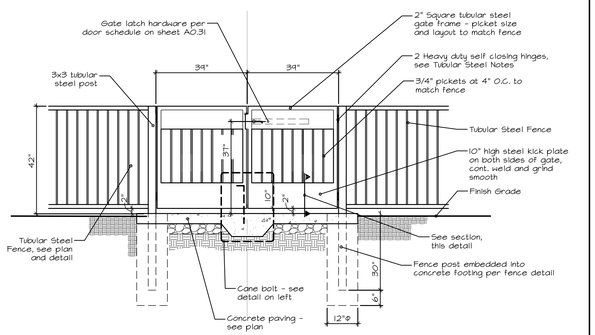

Scale: 1/2" = 1'-0"
20-2266 TSgateatSepFence.dwg

Tube Steel Double Leaf Pedestrian Gate at Separation Fence | F

Note:
Elevations are provided to communicate overall design intent. This detail is not to be used for member sizing, spacing, etc. Refer to specific details of the various elements included in these elevations for detailed information.

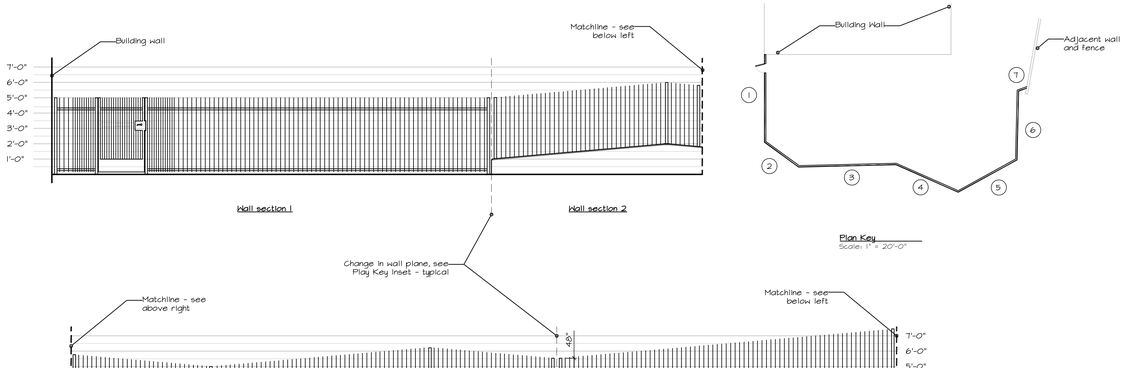

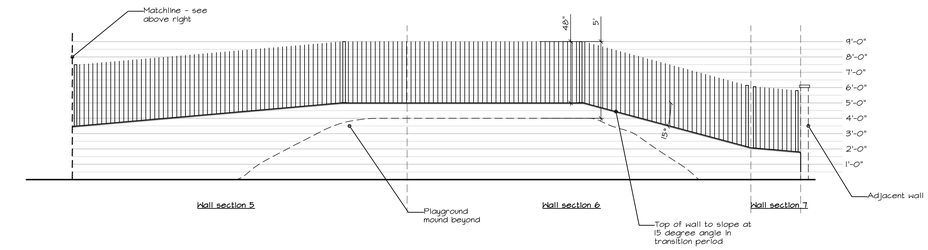

Scale: 1/4" = 1'-0"
20-2266 Preschool Play Yard Fence-ElevR1.dwg

Preschool Play Yard Fence-Elev | A

Note:
Elevations are provided to communicate overall design intent. This detail is not to be used for member sizing, spacing, etc. Refer to specific details of the various elements included in these elevations for detailed information.

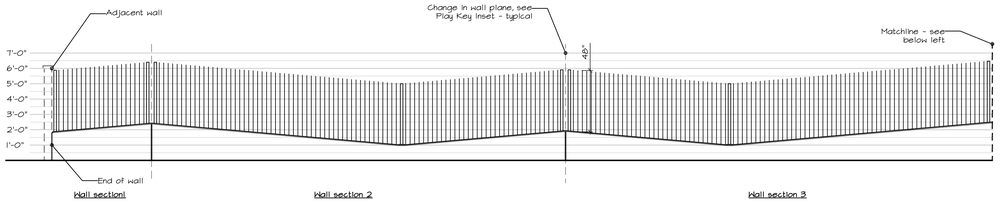

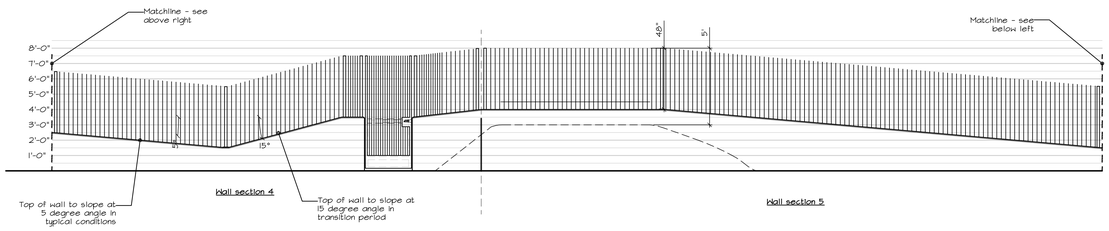

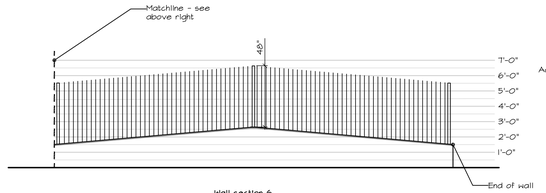

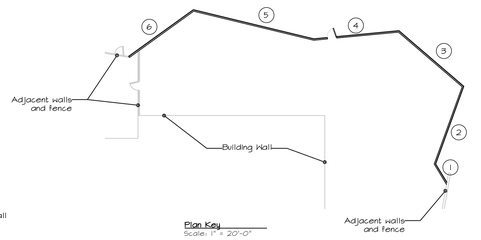

Scale: 1/4" = 1'-0"
20-2266 Toddler Play Yard Fence-ElevR1.dwg

Toddler Play Yard Enclosure Fence - Elevation | B

Division of the State Architect

APPROVED
DIV. OF THE STATE ARCHITECT
APP: 02-119316 INC:
REVIEWED FOR
SS☐ FLS☐ ACS☒
DATE: 03/24/2022

Office of the State Fire Marshal

OFFICE OF THE STATE FIRE MARSHAL
APPROVED FIRE AND PANIC ONLY
03/14/22
21-0498
Approval of this plan does not authorize or approve any omission or deviation from applicable regulations. Final approval is subject to field inspection. One set of approved plans shall be available on the project site at all times.

CSUS CHILD DEVELOPMENT CENTER

CALIFORNIA STATE UNIVERSITY, STANISLAUS
ONE UNIVERSITY CIRCLE
TURLOCK, CA 95382

ehdd.

PIER 1, BAY 2
THE EMBARCADERO
SAN FRANCISCO, CA 94111

INFO@EHDD.COM
+1 415-285-9193

Consultant

KLA LANDSCAPE ARCHITECTURE PLANNING
KLA, Inc.
151 N. Norlin St.,
Sonora Ca, 95370
(209)532-2856
www.kla-ca.com

Stamp

LICENSED LANDSCAPE ARCHITECT
KEVIN L. HARRIS
03.31.2023
Renewal Date
12.06.2021
Date
STATE OF CALIFORNIA

Printing	Date
95% CONSTRUCTION DOCUMENTS	06.25.2021
PERMIT SET	08.16.2021
PERMIT SET - DSA V2	12.15.2021
PERMIT SET - SFM	12.21.2021

Revisions and Description	Date

Scale
See Details
Drawn by
MBH
EHDD Job Number
KLA 20-2266

Sheet Title
Construction Details

Sheet Number
L2.3 V3

Not Used | L

Natural Wood Stumps | H

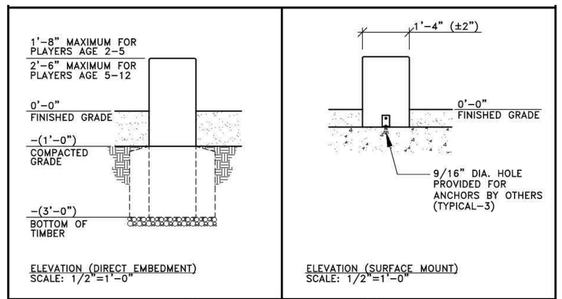

This drawing reveals the copyrighted intellectual property of Columbia Cascade Company. Not for use by others without our express, written authorization.

Authorization for use is hereby granted to architects, landscape architects and similar design professionals solely for the purpose of specifying TimberForm products.

COLUMBIA CASCADE COMPANY
Makers of TimberForm®, PipeLine® RePlay® TimberForm®-2, IsherPlay® CycLoops® and CycLocker® Products.
1300 S.W. Sixth Avenue, Suite 310 Portland, Oregon 97201-3464 U.S.A.
Telephone 503/223-1157 Facsimile 503/223-4530
WWW.TIMBERFORM.COM

Title: TIMBERFORM MODEL NO. 1501 TIMBERCRAFT FULL ROUND STEPPER

Scale	Drawn by: AT	02-26-19
NOTED	O.K'd by: RK	02-26-19

Drawing No. W-1501 | Sheet 1 of 1

Poured in Place Play Surfacing & Curbing | D

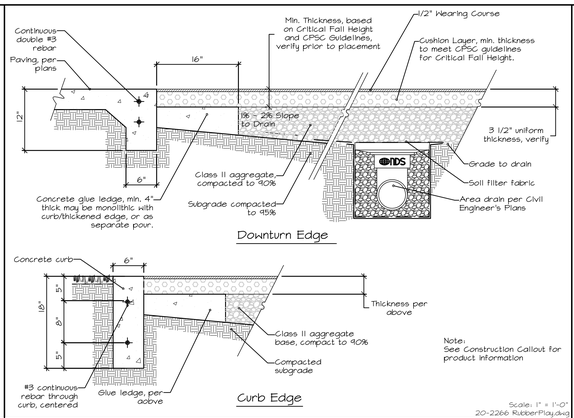

Scale: 1" = 1'-0"
20-2266 RubberPlay.dwg

Not Used | M

Soma Stone Seating Element | I

The SoMA Stones were designed with the aid of 3D scanning technology. Using small stones collected in Northern California, we captured the sensual shapes formed over time, creating bold, expressive seating.

For more detailed product information, please contact us at products@concreteworks.com.

SPECIFICATIONS	SIZE	XSMALL	SMALL	MEDIUM	LARGE
	DIMENSIONS	25" x 30" x 14"	31" x 42" x 13"	42"x 51" x 15"	47" x 60" x 16"
	WEIGHT	100 lbs.	160 lbs.	250 lbs.	310 lbs.
	THICKNESS	3/4"			
	COLORS	Any of our 18 standard colors			
	LEADTIME	Contact us for current lead times: products@concreteworks.com			

Concreteworks

Made in California est. 1991 530.534.7141 concreteworks.com

Play Sand Box and Edging | E

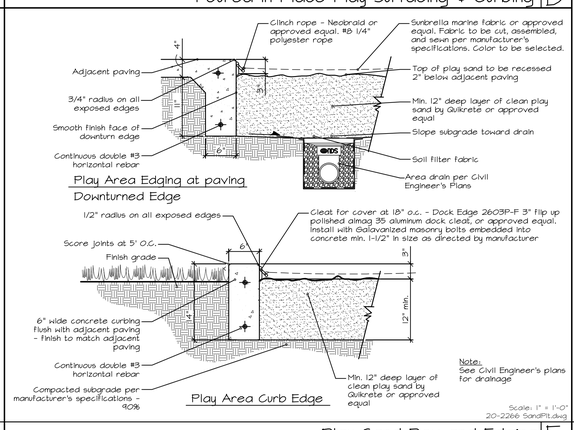

Scale: 1" = 1'-0"
20-2266 SandPit.dwg

Not Used | N

Not Used | J

Play Hut | F

KOMPAN - NRO-Custom: 897616 - variant of NRO414-1001

Raised Garden Planter with Built in Bench | A

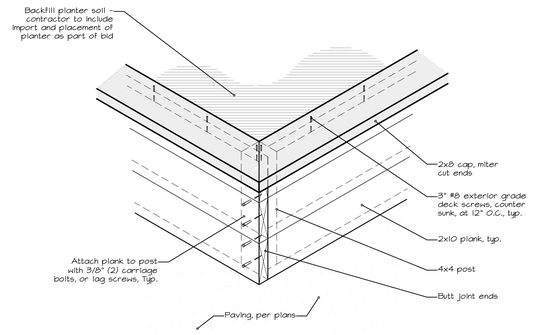

Raised Garden Planter Corner Construction

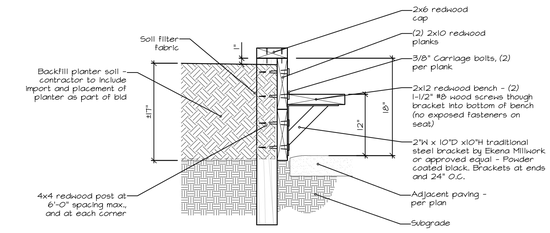

Raised Garden Planter - Section

Note
All redwood shall be Construction Heart grade 545 lumber

Scale: 1" = 1'-0"
20-2266 RaisedPlanter-12.dwg

Not Used | O

Not Used | K

Farm Pump | G

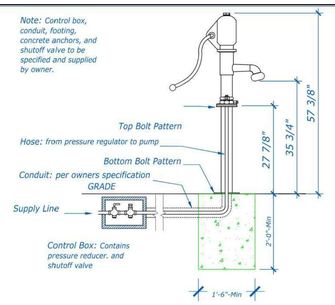

Farm Pump w/o Platform

goric
P.O. Box 410205 Cambridge, MA 02141
phone 617-499-3393 fax 617-499-3394
www.goric.com

DATE: 2/2015
SCALE: NTS
DRAWING BY: GORIC
ITEM #: GP46014
PAGE #'s: 2 OF 5

Tricycle Track Typical Striping | B

Notes
1. All tricycle track paint to be white water based traffic paint.

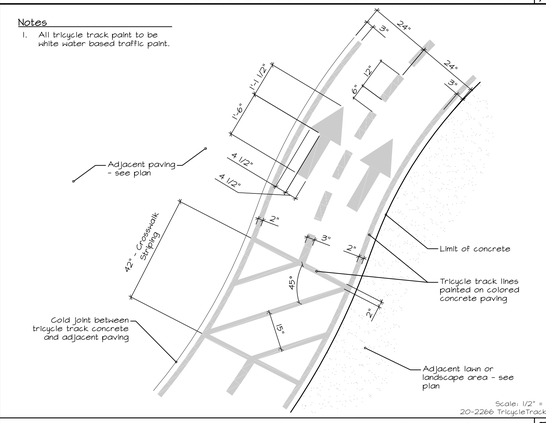

Scale: 1/2" = 1'-0"
20-2266 TricycleTrack.dwg

Not Used | C

Division of the State Architect

APPROVED
DIV. OF THE STATE ARCHITECT
APP: 02-119316 INC:
REVIEWED FOR
SS☐ FLS☐ ACS☒
DATE: 03/24/2022

Office of the State Fire Marshal

OFFICE OF THE STATE FIRE MARSHAL
APPROVED FIRE AND PANIC ONLY
03/14/22
21-0498
Approval of this plan does not authorize or approve any omission or deviation from applicable regulations. Final approval is subject to field inspection. One set of approved plans shall be available on the project site at all times.

CSUS CHILD DEVELOPMENT CENTER

CALIFORNIA STATE UNIVERSITY, STANISLAUS
ONE UNIVERSITY CIRCLE
TURLOCK, CA 95382

ehdd.

PIER 1, BAY 2
THE EMBARCADERO
SAN FRANCISCO, CA 94111

INFO@EHDD.COM
+1 415-285-9193

Consultant

KLA
LANDSCAPE ARCHITECTURE PLANNING
KLA, Inc.
151 N. Norlin St.,
Sonora Ca, 95370
(209)532-2856
www.kla-ca.com

Stamp

LICENSED LANDSCAPE ARCHITECT
MARK B. HAMILTON
03.31.2023
Renewal Date
12.06.2021
Date
STATE OF CALIFORNIA

Printing	Date
95% CONSTRUCTION DOCUMENTS	06.25.2021
PERMIT SET	08.16.2021
PERMIT SET - DSA V2	12.15.2021
PERMIT SET - SFM	12.21.2021

Revisions and Description	Date

Scale
See Details
Drawn by
MBH
EHDD Job Number
KLA 20-2266

Sheet Title
Construction Details

Sheet Number
L2.4 V3

Infant Yard - Play Equipment | C

CSU Stanislaus_Combined_4-7-21.dwg

PLAY AREA: 670 sf

MAXIMUM FALL HEIGHT: 4'

DESIGNED FOR CHILDREN AGES:
☐0–2 YEARS
☐2–3 YEARS
☒4–5 YEARS

WARNING!
ACCESSIBLE SAFETY SURFACING MATERIAL IS RECOMMENDED BENEATH AND AROUND THIS EQUIPMENT

ALTHOUGH ATTEMPTS HAVE BEEN MADE TO PROVIDE AN ACCURATE SITE, IT MAY NOT TRULY REPRESENT THE AREA WHERE THIS STRUCTURE IS TO BE PLACED.

THE USE AND LAYOUT OF THESE COMPONENTS CONFORM TO THE REQUIREMENTS OF ASTM F1487.

PROPRIETARY STATEMENT
THIS DOCUMENT CONTAINS CONFIDENTIAL AND PROPRIETARY INFORMATION AND CANNOT BE REPRODUCED OR DIVULGED, IN WHOLE OR IN PART, WITHOUT WRITTEN AUTHORIZATION OF SPECIFIED PLAY EQUIPMENT CO.

Poured in Place
Lawn
Landscape Area
Pathway
Start of Mound

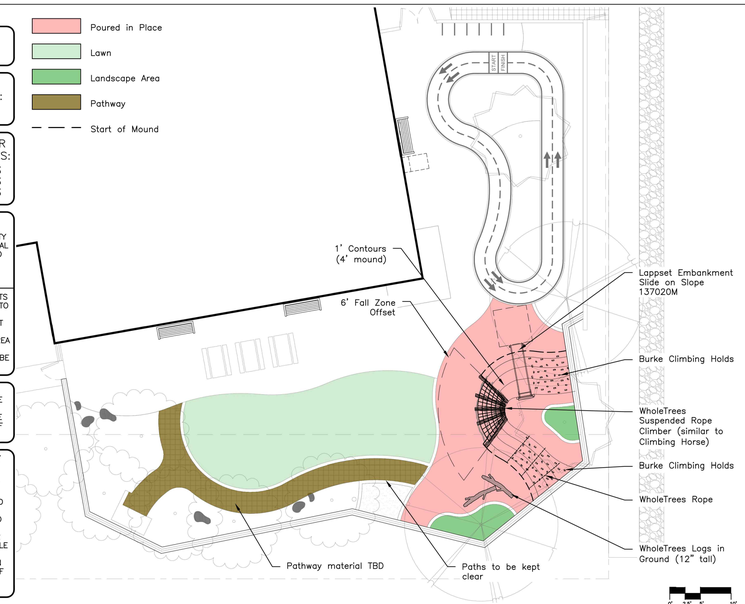

SPEC
SPECIFIED PLAY EQUIPMENT CO.
121 #1 INDUSTRIAL RD.
BELMONT, CA 94002

Seal
Signature
Name Date
License No.

CSU Stanislaus
Preschool Area
Turlock, CA

Project Stage: DD

Drawn By: KMR Date: 4/7/21
Checked By: Date

No.	Revision/Issue	

Sheet Title: PRESCHOOL PLAY AREA

Project: SP-000 Sheet: 05
Date: 4/7/21
Scale: 1"=10'

Infant Yard - Play Equipment | A

CSU Stanislaus_Combined_4-7-21.dwg

PLAY AREA: 214 sf

MAXIMUM FALL HEIGHT: 2'

DESIGNED FOR CHILDREN AGES:
☒0–2 YEARS
☐2–3 YEARS
☐4–5 YEARS

WARNING!
ACCESSIBLE SAFETY SURFACING MATERIAL IS RECOMMENDED BENEATH AND AROUND THIS EQUIPMENT

ALTHOUGH ATTEMPTS HAVE BEEN MADE TO PROVIDE AN ACCURATE SITE, IT MAY NOT TRULY REPRESENT THE AREA WHERE THIS STRUCTURE IS TO BE PLACED.

THE USE AND LAYOUT OF THESE COMPONENTS CONFORM TO THE REQUIREMENTS OF ASTM F1487.

PROPRIETARY STATEMENT
THIS DOCUMENT CONTAINS CONFIDENTIAL AND PROPRIETARY INFORMATION AND CANNOT BE REPRODUCED OR DIVULGED, IN WHOLE OR IN PART, WITHOUT WRITTEN AUTHORIZATION OF SPECIFIED PLAY EQUIPMENT CO.

SPEC
SPECIFIED PLAY EQUIPMENT CO.
121 #1 INDUSTRIAL RD.
BELMONT, CA 94002

Seal
Signature
Name Date
License No.

CSU Stanislaus
Infant Play Area
Turlock, CA

Project Stage: DD

Drawn By: KMR Date: 4/7/21
Checked By: Date

No.	Revision/Issue	

Sheet Title: INFANT PLAY AREA

Project: SP-000 Sheet: 01
Date: 4/7/21
Scale: 1"=10'

Not Used | F

Not Used | D

Not Used | G

Not Used | E

Toddler Yard - Play Equipment | B

CSU Stanislaus_Combined_4-7-21.dwg

PLAY AREA: 730 sf

MAXIMUM FALL HEIGHT: 3'

DESIGNED FOR CHILDREN AGES:
☐0–2 YEARS
☒2–3 YEARS
☐4–5 YEARS

WARNING!
ACCESSIBLE SAFETY SURFACING MATERIAL IS RECOMMENDED BENEATH AND AROUND THIS EQUIPMENT

ALTHOUGH ATTEMPTS HAVE BEEN MADE TO PROVIDE AN ACCURATE SITE, IT MAY NOT TRULY REPRESENT THE AREA WHERE THIS STRUCTURE IS TO BE PLACED.

THE USE AND LAYOUT OF THESE COMPONENTS CONFORM TO THE REQUIREMENTS OF ASTM F1487.

PROPRIETARY STATEMENT
THIS DOCUMENT CONTAINS CONFIDENTIAL AND PROPRIETARY INFORMATION AND CANNOT BE REPRODUCED OR DIVULGED, IN WHOLE OR IN PART, WITHOUT WRITTEN AUTHORIZATION OF SPECIFIED PLAY EQUIPMENT CO.

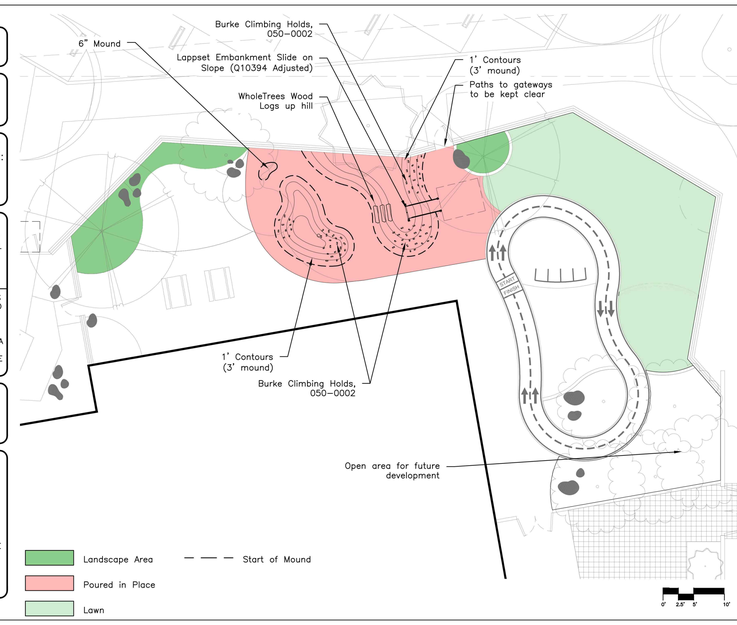

SPEC
SPECIFIED PLAY EQUIPMENT CO.
121 #1 INDUSTRIAL RD.
BELMONT, CA 94002

Seal
Signature
Name Date
License No.

CSU Stanislaus
Toddler Play Area
Turlock, CA

Project Stage: DD

Drawn By: KMR Date: 4/7/21
Checked By: Date

No.	Revision/Issue	

Sheet Title: TODDLER PLAY AREA

Project: SP-000 Sheet: 03
Date: 4/7/21
Scale: 1"=10'

Division of the State Architect

APPROVED
DIV. OF THE STATE ARCHITECT
APP: 02-119316 INC:
REVIEWED FOR
SS☐ FLS☐ ACS☑
DATE: 03/24/2022

Office of the State Fire Marshal

OFFICE OF THE STATE FIRE MARSHAL
APPROVED FIRE AND PANIC ONLY
03/14/22
21-0498
Approval of this plan does not authorize or approve any omission or deviation from applicable requirements. Final approval is subject to field inspection. One set of approved plans shall be available on the project site at all times.

CSUS CHILD DEVELOPMENT CENTER

CALIFORNIA STATE UNIVERSITY, STANISLAUS
ONE UNIVERSITY CIRCLE
TURLOCK, CA 95382

ehdd.

PIER 1, BAY 2
THE EMBARCADERO
SAN FRANCISCO, CA 94111

INFO@EHDD.COM
+1 415-285-9193

Consultant

KLA LANDSCAPE ARCHITECTURE PLANNING
KLA, Inc.
151 N. Norlin St.,
Sonora Ca, 95370
(209)532-2856
www.kla-ca.com

Stamp

LICENSED LANDSCAPE ARCHITECT
KEVIN L. HARVEY
03.31.2023
Renewal Date
12.06.2021
Date
STATE OF CALIFORNIA

Printing	Date
95% CONSTRUCTION DOCUMENTS	06.25.2021
PERMIT SET	08.16.2021
PERMIT SET - DSA V2	12.15.2021
PERMIT SET - SFM	12.21.2021

Revisions and Description	Date

Scale
See Details
Drawn by
MBH
EHDD Job Number
KLA 20-2266

Sheet Title
Construction Details

Sheet Number
L2.5 V3

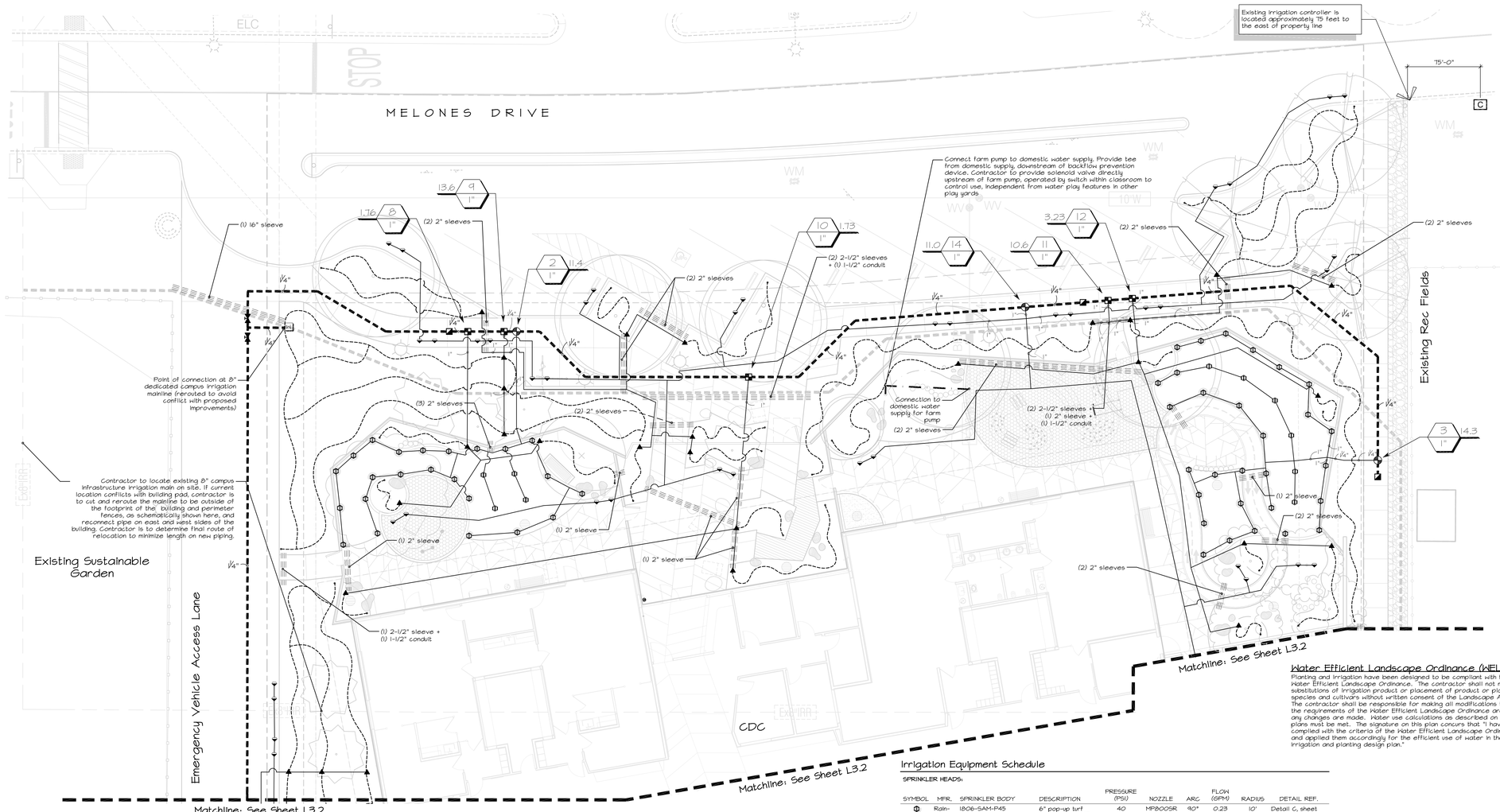

Any irrigation equipment or piping shown off-site, in paved areas or within building footprint is shown schematically for graphic clarity. All equipment and piping shall be located in planter beds wherever possible and always within the project limits.

Tree bubblers and associated lateral piping is shown schematically for graphic clarity. Bubblers shall be located at the actual tree location and per the details.

All drip tubing shall be buried 3" under the soil unless otherwise noted. Drip tubing placed on the surface under the mulch is not acceptable.

Non-Potable Water Notes

The landscape irrigation system for this project is serviced by non-potable water source. Irrigation Contractor shall adhere to the following requirements regarding the use of non-potable water:

1. Piping. All piping shall be buried to the depths noted in the plans and details. All piping, including lateral and mainlines, shall be identified by the use of integrally colored purple pipe that is specifically manufactured for Non-Potable application.
2. All above ground irrigation facilities shall be purple colored (Pantone #522):
   a. Valve boxes and other at-grade boxes: integral purple color
   b. Backflow devices: Painted with two coats of purple enamel
   c. Sprinkler heads: Integral purple color
3. All valves and other below grade equipment shall be tagged with permanent waterproof tags (T. Christy Enterprises or approved equal) in both English and Spanish that identify the use of recycled water ("Non-Potable - Do not Drink"). Tags shall be attached with stainless steel wire or plastic zip ties.
4. All irrigation controllers shall have a permanent waterproof warning sign marked with the words "Non-Potable Water - Do Not Drink".
5. Quick coupling valves shall be manufactured specifically for non-potable water use and shall include a permanently attached purple rubber vinyl cover with the words "Non-Potable" printed on the cover.
6. Remote control valves shall be equipped with purple flow-control handles.
7. Spray heads shall be equipped with purple covers.
9. Irrigation system shall be installed per all local and CBC codes and regulations regarding the use of non-potable water. Codes shall take precedence over these plans, notes, and specifications.

Sleeving Notes

1. All mainline piping and control wires under paving shall be installed in separate sleeves. Sleeves to be 4" minimum size and shall be installed at the size as indicated on the plans. If not specified, piping shall be installed in sleeves that are twice the diameter of the pipe.
2. The sleeves shown on this plan are based on mainline and lateral line routing as anticipated by the landscape architect. Irrigation contractor shall verify that sleeve locations and quantities are sufficient based on actual routing prior to installation.
3. All irrigation wires under pavement shall be sleeved in separate Schedule 40 PVC gray electrical conduits.
4. One extra (empty) sleeve shall be provided at all driveway and street crossings in the event of sleeve failure. Extra sleeve shall match the size of the largest sleeve in the grouping.
5. Sleeving sizes and quantities shown are the minimum sizes required. Contractor may install larger sleeves at their discretion.
6. For ease of irrigation system installation, it is highly recommended that all piping that occurs inside of the sleeves be installed concurrently with the sleeves.

Sub-surface Dripline Notes

1. Subsurface irrigation system shall be installed per the manufacturer's recommendations. It is the responsibility of the landscape contractor to ensure that layout is done properly and effective spacing is maintained so that all plant material receives adequate water. The layout as shown on the plan is to be used as a guide. Trees, utilities, and other items may require an adjustment of the layout, but effective coverage and spacing must be maintained.
2. All tubing shall be installed 3" below finish grade and 12" on center.
3. The contractor shall install a minimum of one (1) Air Vacuum Relief Valve per subsurface circuit. An additional Air Vacuum Relief Valve is to be installed at every individual high point within the circuit to ensure that air does not hinder the flow of irrigation water.
4. An automatic flush valve shall be located at the end of all subsurface line runs, min. two (2) flush valves per circuit.
5. Contractor shall include in the base bid any necessary hand watering or temporary irrigation needed to establish turf within the subsurface dripline areas (also see Add/Alternate Bid notes).

General Irrigation Notes

1. The Irrigation Contractor shall examine the site to verify that there are no discrepancies between the site conditions and the plans prior to commencement of any work. In the event that any discrepancies are discovered, the Irrigation Contractor shall notify the Landscape Architect or Owner immediately to obtain a directive. Failure to report any such discrepancies without a directive from the Landscape Architect or Owner implies that the Irrigation Contractor has accepted the site as-is and that any changes deemed necessary will be at the sole cost of the Irrigation Contractor.
2. The irrigation system is being supplied by a non-potable water source. Refer to Non-Potable Water Notes and adhere to all details requiring the use of non-potable irrigation equipment.
3. Any irrigation piping or equipment shown in paved areas, within building footprints or off-site is shown schematically for graphic clarity. All piping and equipment shall always be located within the site boundaries and within landscape areas wherever possible.
4. See Sleeving Notes for requirements for irrigation sleeving.
5. All valves shall be grouped in planter beds wherever possible (not in turf areas or decomposed granite areas).
6. All piping shall be installed per the sizes shown on the plans. The sizes shown are the minimum sizes required; larger pipe may be substituted at the Irrigation Contractor's discretion and expense. PVC piping shall be minimum 1" size.
7. Connections between the automatic controllers and the electric control valves shall be made with #14-1 AWG UF 600-volt direct-burial wire. Pilot wires shall be red. Common wires shall be white. Irrigation Contractor shall run two (2) spare wires along the entire length of the mainline, looped into each valve box and terminated into the controller cabinet. Spare wires shall be blue.
8. Control valve wiring shall occupy the same trench as the mainline wherever possible. Any wire not installed in the mainline trench shall be installed in Schedule 40 gray PVC conduit.
9. Electrical service, meter and all associated line voltage connections for irrigation controllers, booster pumps and any other equipment requiring power shall be provided by the Electrical Contractor.
10. Irrigation Contractor shall verify the proposed controller location with Owner or General Contractor prior to installation of controller or any associated wiring or conduits.
11. The irrigation system has been designed to operate at a minimum static pressure of 55 PSI at 16 GPM at the point of connection. Irrigation Contractor shall verify pressure prior to commencing with any work and shall notify the Landscape Architect immediately of any discrepancies.
12. Where applicable, all irrigation heads shall be set perpendicular to finish grade unless otherwise specified.
13. All irrigation equipment shall be installed per the manufacturer's specifications. Irrigation Contractor shall notify the Landscape Architect immediately in the event there are any discrepancies between the plans and the manufacturer's specifications.
14. All drip tubing shall be installed 3" below grade. Emitters to be located 3" to 6" from the trunk of shrubs and equipped with a bug guard and galvanized tie-down stake.
15. Weather sensor shall be installed on an exposed wall or soffit adjacent to the controller in a location that will receive unimpeded rainfall. Weather sensor shall also be installed in a location where the device is not susceptible to theft or vandalism.
16. Prior to turnover of project, the irrigation contractor shall flush and adjust all irrigation heads and valves for optimum coverage with minimal over spray onto hardscape elements.
17. Irrigation Contractor shall submit an Irrigation Audit Report with the Certificate of Completion to the governing agency that may include, but is not limited to: inspection, system tune-up, system test with distribution uniformity (if applicable), reporting overspray or run off that causes overland flow, and preparation of an irrigation schedule. Irrigation Audit shall be conducted by a Certified Landscape Irrigation Auditor.

Irrigation Equipment Schedule

SPRINKLER HEADS:

SYMBOL	MFR.	SPRINKLER BODY	DESCRIPTION	PRESSURE (PSI)	NOZZLE	ARC	FLOW (GPM)	RADIUS	DETAIL REF.
	Rain-Bird	1806-SAM-P45	6" pop-up turf sprinkler with 45 PSI regulator	40	MP8005R	90°	0.23	10'	Detail G, sheet L6.1
					MP8005R	180°	0.42	10'	
					MP8005R	210°	0.43	10'	
					MP8005R	360°	0.78	10'	

SHRUB AREA DRIP SYSTEM COMPONENTS:

SYMBOL	MANUFACTURER	MODEL NO.	DESCRIPTION	DETAIL REFERENCE
	RainBird		XT-700 5/8" (0.700" O.D.) polyethylene commercial-grade drip supply tubing with Xeri-Bug barbed point-source emitters, per the following schedule: 1-gallon shrubs (1) XB-20 (2 GPH) emitter 2 and 5-gallon shrubs (2) XB-20 (2 GPH) emitters 15-gallon shrubs (3) XB-20 (2 GPH) emitters 15-gallon trees (4) XB-20 (2 GPH) emitters 24" box trees (6) XB-20 (2 GPH) emitters 36" box trees (8) XB-20 (2 GPH) emitters	Details A-C, sheet L6.1
▲	Approved		Drip supply tubing to PVC connection	Detail A, sheet L6.1
●	NDS	CEP-700	Compression flush cap in 6" round purple valve box with Hunter ECO-ID pop-up drip system operation indicator	Detail C, sheet L6.1
			Indicates separation between drip zones	

TREE IRRIGATION:

SYMBOL	MANUFACTURER	MODEL NO.	DESCRIPTION	DETAIL REFERENCE
	RainBird	RWS-M-B-G-1401 & 1401	0.25 GPM root zone watering system with RWS-GRATE-P purple grate (one per tree) and 0.25 GPM supplemental surface bubbler on PVC IPS flex riser (one per tree)	Detail J, sheet L6.1

VALVES:

SYMBOL	MANUFACTURER	MODEL NO.	DESCRIPTION	DETAIL REFERENCE
	RainBird	XCZ-100-PRBR	1" drip control zone kit with scrubber valve and 200 mesh pressure-regulating basket filter	Detail K, sheet L6.1
	RainBird	100-PESB-R	1" remote control scrubber valve	Detail L, sheet L6.1
	RainBird	33-DNP	3/4" quick coupler valve with purple locking rubber cover	Detail M, sheet L6.1
	Nibco	T-113	Threaded bronze gate valve (line size)	Detail N, sheet L6.1
	Buckner/Superior	B401	3/4" garden valve at vegetable garden planters	Detail O, Sheet L6.1

P.O.C. EQUIPMENT:

SYMBOL	MANUFACTURER	MODEL NO.	DESCRIPTION	DETAIL REFERENCE
POC	N/A	N/A	Point of connection at existing 8" irrigation mainline	

CONTROL EQUIPMENT:

SYMBOL	MANUFACTURER	MODEL NO.	DESCRIPTION	DETAIL REFERENCE
C	RainMaster (Existing)	DX2 Evolution	Existing controller with 24 available stations. Contractor to connect all new control valves to existing controller.	

PIPING:

SYMBOL	MANUFACTURER	DESCRIPTION	DETAIL REFERENCE
	Approved	Schedule 40 Purple pressurized PVC mainline - schematic location (size per plan)	Detail P, sheet L6.1
	Approved	Schedule 40 Purple PVC lateral line (size per plan - 1" minimum size)	Detail P, sheet L6.1
	Approved	Schedule 40 PVC sleeve (size and quantity per plan - 4" minimum size)	Detail Q, sheet L6.1
	Approved	3/4" PVC SCH 40 Potable water supply line from domestic service provided on Civil Engineers plans to service water play fixtures in play yards and hose bibs at vegetable gardens	Detail P, sheet L6.1

Water Efficient Landscape Ordinance (WELO)

Planting and Irrigation have been designed to be compliant with the Water Efficient Landscape Ordinance. The contractor shall not make substitutions of irrigation product or placement of product or plant species and cultivars without written consent of the Landscape Architect. The contractor shall be responsible for making all modifications to ensure the requirements of the Water Efficient Landscape Ordinance are met if any changes are made. Water use calculations as described on these plans must be met. The signature on this plan concurs that "I have complied with the criteria of the Water Efficient Landscape Ordinance and applied them accordingly for the efficient use of water in the irrigation and planting design plan."

IRRIGATING WITH RECYCLED WATER DO NOT DRINK

NO BEBER AGUA PROCESADA PARA SISTEMA DE RIEGO

NORTH

Scale: 1" = 10'-0"

0 5' 10' 20

811 Know what's below. Call before you dig. Dial 811 or 800-227-2600

Division of the State Architect

APPROVED
DIV. OF THE STATE ARCHITECT
APP: 02-119316 INC:
REVIEWED FOR
SS☐ FLS☐ ACS☑
DATE: 03/24/2022

Office of the State Fire Marshal

OFFICE OF THE STATE FIRE MARSHAL
APPROVED FIRE AND PANIC ONLY
03/14/22
21-0498
Approval of this plan does not authorize or approve any omission or deviation from applicable regulations. Final approval is subject to field inspection. One set of approved plans shall be available on the project site at all times.

CSUS CHILD DEVELOPMENT CENTER

CALIFORNIA STATE UNIVERSITY, STANISLAUS
ONE UNIVERSITY CIRCLE
TURLOCK, CA 95382

ehdd.

PIER 1, BAY 2
THE EMBARCADERO
SAN FRANCISCO, CA 94111

INFO@EHDD.COM
+1 415-285-9193

Consultant

KLA LANDSCAPE ARCHITECTURE PLANNING
KLA, Inc.
151 N. Norlin St.
Sonora Ca, 95370
(209)532-2856
www.kla-ca.com

Stamp

LICENSED LANDSCAPE ARCHITECT
03.31.2023
Renewal Date
12.06.2021
Date
STATE OF CALIFORNIA

Printing	Date
95% CONSTRUCTION DOCUMENTS	06.25.2021
PERMIT SET	08.16.2021
PERMIT SET - DSA V2	12.15.2021
PERMIT SET - SFM	12.21.2021

Revisions and Description	Date

Scale
1" = 10'-0"

Drawn by
MBH

EHDD Job Number
KLA 20-2266

Sheet Title
Irrigation Plan

Sheet Number
L3.1 V3

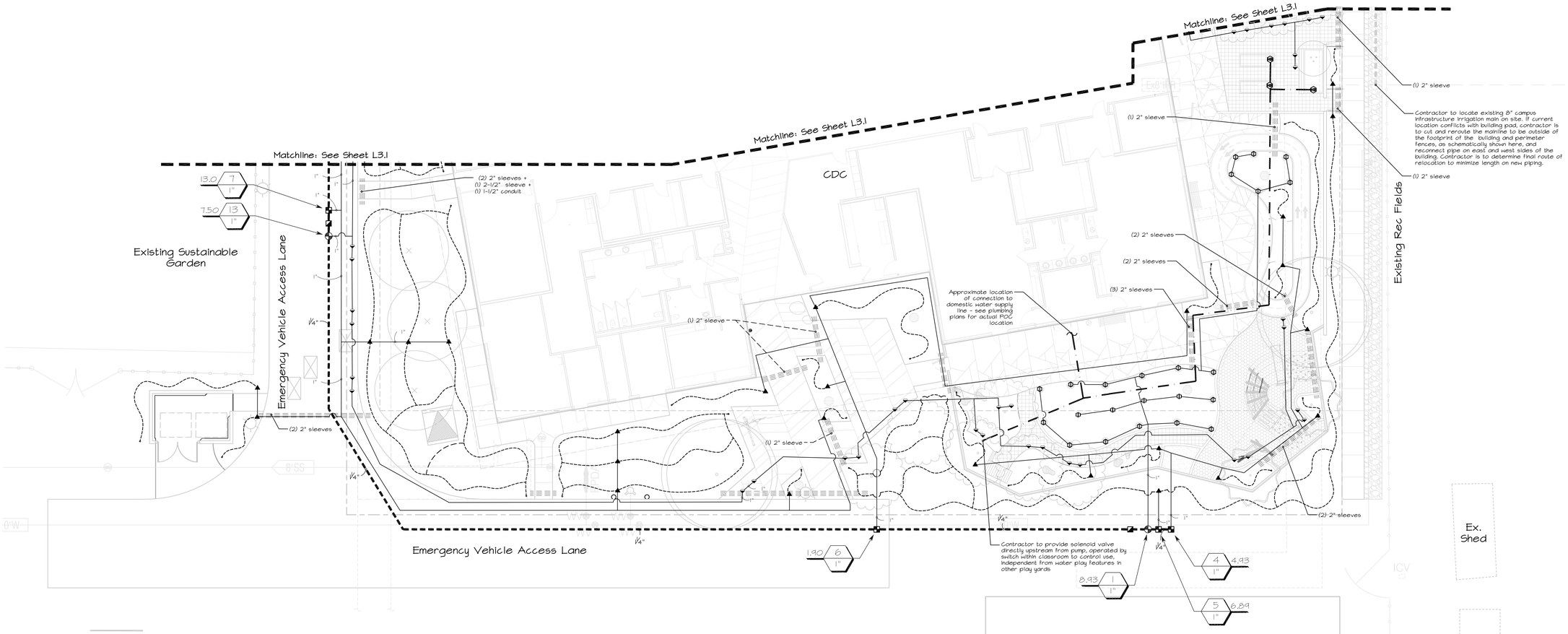

Irrigation Equipment Schedule

SPRINKLER HEADS:

SYMBOL	MFR.	SPRINKLER BODY	DESCRIPTION	PRESSURE (PSI)	NOZZLE	ARC	FLOW (GPM)	RADIUS	DETAIL REF.
	Rain-Bird	1806-SAM-P45	6" pop-up turf sprinkler with 45 PSI regulator	40	MP8005R	90°	0.23	10'	Detail G, sheet L6.1
					MP8005R	180°	0.42	10'	
					MP8005R	210°	0.43	10'	
					MP8005R	360°	0.78	10'	

SHRUB AREA DRIP SYSTEM COMPONENTS:

SYMBOL	MANUFACTURER	MODEL NO.	DESCRIPTION	DETAIL REFERENCE
	RainBird		XT-700 5/8" (0.700" O.D.) polyethylene commercial-grade drip supply tubing with Xeri-Bug barbed point-source emitters, per the following schedule: 1-gallon shrubs (1) XB-20 (2 GPH) emitter 2 and 5-gallon shrubs (2) XB-20 (2 GPH) emitters 15-gallon shrubs (3) XB-20 (2 GPH) emitters 15-gallon trees (4) XB-20 (2 GPH) emitters 24" box trees (6) XB-20 (2 GPH) emitters 36" box trees (8) XB-20 (2 GPH) emitters	Details A-C, sheet L6.1
▲	Approved		Drip supply tubing to PVC connection	Detail A, sheet L6.1
●	NDS	CEP-700	Compression flush cap in 6" round purple valve box with Hunter ECO-ID pop-up drip system operation indicator	Detail C, sheet L6.1
			Indicates separation between drip zones	

TREE IRRIGATION:

SYMBOL	MANUFACTURER	MODEL NO.	DESCRIPTION	DETAIL REFERENCE
	RainBird	RWS-M-B-C-1401 & 1401	0.25 GPM root zone watering system with RWS-GRATE-P purple grate (one per tree) and 0.25 GPM supplemental surface bubbler on PVC IPS flex riser (one per tree)	Detail J, sheet L6.1

VALVES:

SYMBOL	MANUFACTURER	MODEL NO.	DESCRIPTION	DETAIL REFERENCE
	RainBird	XCZ-100-PRBR	1" drip control zone kit with scrubber valve and 200 mesh pressure-regulating basket filter	Detail K, sheet L6.1
	RainBird	100-PESB-R	1" remote control scrubber valve	Detail L, sheet L6.1
	RainBird	33-DNP	3/4" quick coupler valve with purple locking rubber cover	Detail M, sheet L6.1
	Nibco	T-113	Threaded bronze gate valve (line size)	Detail N, sheet L6.1
	Buckner/Superior	B401	3/4" garden valve at vegetable garden planters	Detail O, Sheet L6.1

P.O.C. EQUIPMENT:

SYMBOL	MANUFACTURER	MODEL NO.	DESCRIPTION	DETAIL REFERENCE
[M]	N/A	N/A	Point of connection at existing 8" irrigation mainline	

CONTROL EQUIPMENT:

SYMBOL	MANUFACTURER	MODEL NO.	DESCRIPTION	DETAIL REFERENCE
C	RainMaster (Existing)	DX2 Evolution	Existing controller with 24 available stations. Contractor to connect all new control valves to existing controller.	

PIPING:

SYMBOL	MANUFACTURER	DESCRIPTION	DETAIL REFERENCE
	Approved	Schedule 40 Purple pressurized PVC mainline - schematic location (size per plan)	Detail P, sheet L6.1
	Approved	Schedule 40 Purple PVC lateral line (size per plan - 1" minimum size)	Detail P, sheet L6.1
	Approved	Schedule 40 PVC sleeve (size and quantity per plan - 4" minimum size)	Detail Q, sheet L6.1
	Approved	3/4" PVC SCH 40 Potable water supply line from domestic service provided on Civil Engineers plans to service water play fixtures in play yards and hose bibs at vegetable gardens	Detail P, sheet L6.1

For General Irrigation Notes, see Sheet L3.1

IRRIGATING WITH RECYCLED WATER
DO NOT DRINK

NO BEBER
AGUA PROCESADA
PARA SISTEMA DE
RIEGO

Water Efficient Landscape Ordinance (WELO)

Planting and Irrigation have been designed to be compliant with the Water Efficient Landscape Ordinance. The contractor shall not make substitutions of irrigation product or placement of product or plant species and cultivars without written consent of the Landscape Architect. The contractor shall be responsible for making all modifications to ensure the requirements of the Water Efficient Landscape Ordinance are met if any changes are made. Water use calculations as described on these plans must be met. The signature on this plan concurs that "I have complied with the criteria of the Water Efficient Landscape Ordinance and applied them accordingly for the efficient use of water in the irrigation and planting design plan."

NORTH
Scale: 1" = 10'-0"
0 5' 10' 20'

811 Know what's below. Call before you dig.
Dial 811 or 800-227-2600

Division of the State Architect

APPROVED
DIV. OF THE STATE ARCHITECT
APP: 02-119316 INC:
REVIEWED FOR
SS☐ FLS☐ ACS☑
DATE: 03/24/2022

Office of the State Fire Marshal

OFFICE OF THE STATE FIRE MARSHAL
APPROVED FIRE AND PANIC ONLY
03/14/22
21-0498
Approval of this plan does not authorize or approve any omission or deviation from applicable regulations. Final approval is subject to field inspection. One set of approved plans shall be available on the project site at all times.

CSUS CHILD DEVELOPMENT CENTER

CALIFORNIA STATE UNIVERSITY, STANISLAUS
ONE UNIVERSITY CIRCLE
TURLOCK, CA 95382

ehdd.

PIER 1, BAY 2
THE EMBARCADERO
SAN FRANCISCO, CA 94111

INFO@EHDD.COM
+1 415-285-9193

Consultant

KLA LANDSCAPE ARCHITECTURE PLANNING
KLA, Inc.
151 N. Norlin St.,
Sonora Ca, 95370
(209)532-2856
www.kla-ca.com

Stamp

LICENSED LANDSCAPE ARCHITECT
MATTHEW B. HARDY
STATE OF CALIFORNIA
03.31.2023
Renewal Date
12.06.2021
Date

Printing	Date
95% CONSTRUCTION DOCUMENTS	06.25.2021
PERMIT SET	08.16.2021
PERMIT SET - DSA V2	12.15.2021
PERMIT SET - SFM	12.21.2021

Revisions and Description	Date

Scale
1" = 10'-0"
Drawn by
MBH
EHDD Job Number
KLA 20-2266

Sheet Title
Irrigation Plan

Sheet Number
L3.2 V3

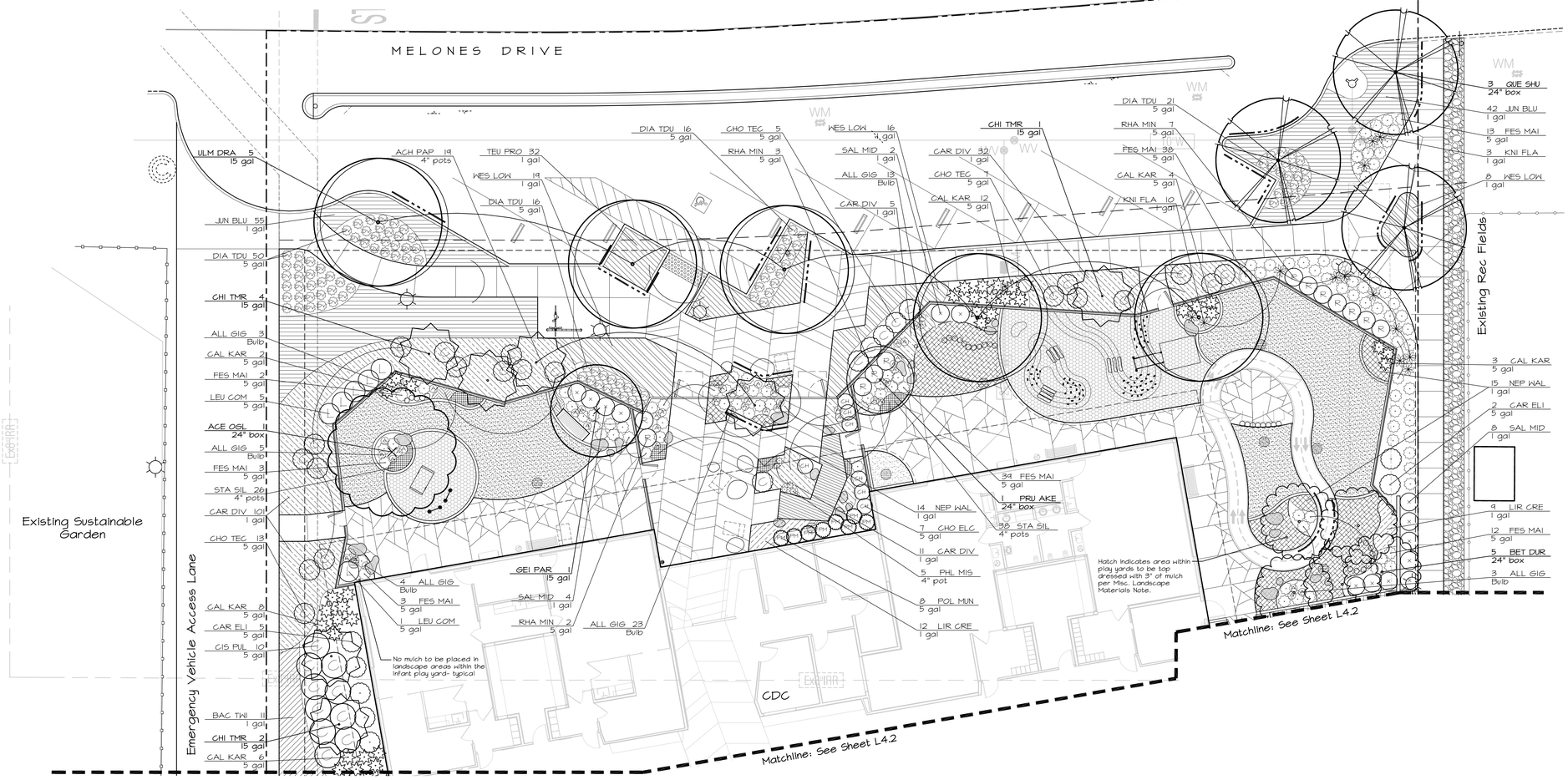

General Planting Notes

1. The contractor shall examine the conditions of the site prior to commencement of work. Any conditions that differ from what is shown on the plans that will affect the installation process shall be brought to the attention of the Owner or Land. Arch. prior to work. Commencement of work implies acceptance of the conditions of the site.
2. The contractor shall verify all plant quantities prior to installation. Plant quantities are listed for the convenience of the contractor, number of symbols and groundcover spacing shall have priority over quantity given.
3. The contractor shall be responsible for the purchasing of all material to meet the specifications of the plans including plants, soil, fertilizer, stakes, and sod. The contractor shall also be responsible for the protection of these materials until the project has been completely turned over to the owner.
4. All plant material shall be subject to approval or rejection by the Landscape Architect or Owner's Representative prior to installation. Installed and then rejected material shall be replaced by the contractor at his/her expense.
5. The contractor shall include in the bid for a continued maintenance period of sixty (60) days after completion and acceptance of the project by the Owner or Owner's Rep.
6. Trees to be planted a min. of 5'-0" from edge of paving or walls (unless otherwise stated on plan). All trees in a formal group or in a row shall be matching in size and shape.
7. All trees provided in the Planting Schedule/Legend are to be installed as single "Standard Form" trees unless specifically otherwise noted in the Planting Schedule/Legend. "Multi-Trunk" and "Low-Branching" trees delivered to the site will not be accepted unless specifically noted to be installed as such.
8. All vines shall be installed with the nursery stakes removed and runners espaliered to the adjacent wall.
9. The following soil amendments specified are for bidding purposes only. The Landscape Contractor shall provide for a Soil Agronomy Report from an approved soils laboratory and/or any additional specifications provided by the Land. Arch. prior to installation of the plant material. The following amendments shall be incorporated into all planting pits and broadcast into soil to depth of 12" by means of a rototiller or equal per 1000 square feet.
   - 4 cyds nitrogen stabilized organic amendment derived from redwood sawdust, fir sawdust or cedar sawdust.
   - 15 lbs. soil sulfur
   - 15 lbs. 15-15-15 fertilizer
10. All soil preparation shall be installed per the soil agronomy report to be provided and paid for by the Landscape Contractor. The report is to be immediately forwarded to the Land. Arch. upon completion.
11. A nitrogen stabilized commercial-grade mulch with maximum 3/4" dia. chip size shall be uniformly broadcast over all shrub areas (not turf) to a depth as specified on the Planting Legend.
12. The planting pits for trees shall be excavated per the detail on the Landscape Details sheet. The backfill mix for use in all tree and shrub pits shall consist of the following:
    - 6 parts 'on-site' soil
    - 4 parts organic amendment (above)
    - 1 lb/yd. of mix 12-12-12 commercial fertilizer
    - 2 lbs./cu. yd. of mix Iron Sulfate
    - 10 lbs./cu. yd. of mix Agricultural Gypsum
13. Fertilizer tablets shall be BEST, 21 gram fertilizer tablets (20-10-5) placed in all planting pits in quantities as follows:

1 gallon	1 tablet
5 gallon	3 tablets
15 gallon	9 tablets
24"-Box	9 tablets
36"-Box	15 tablets

14. All annual color is to be blooming and locally available and adapted to the area. Plant from 4" pot size with plants touching (approx. 8" O.C.). Species to be placed in masses (min. 18" width) according to the color and height of the species.
15. Thirty (30) days after installation all landscape shall be fertilized with 16-6-8 Fertilizer applied at the rate of 6 lbs./1000 sf. Fertilizer application shall be continued thereafter at bi-monthly intervals.
16. For weed control prior to planting, the Landscape Contractor shall thoroughly irrigate the site to promote germination of weed seeds that may be in the soil. After germination has taken place spray the site with Round-Up (or equal) in the amount, and let sit for the time specified by the manufacturer. Reapply Round-Up if needed. After all green weeds have been eradicated, apply Ronstar-G (or equal) Pre-Emergent weed control in the amounts specified by the manufacturer.
17. All plant material to be nursery grown in similar climate. All plant material shall be vigorous and of normal habit of growth and shall be free of girdling roots, sun scald, abrasions, disease, insects, insect eggs and larvae. Plants shall equal or exceed the standards as outlined by the American Standards for Nursery Stock and to applicable California Agriculture Code.

PLANT SCHEDULE

	TREES	BOTANICAL NAME	COMMON NAME	CONT	QTY	Water Use
	ACE OGL	Acer rubrum 'October Glory'	October Glory Red Maple	24" box	1	Medium
	BET DUR	Betula nigra 'BNMTF' TM	Dura Heat River Birch	24" box	11	Medium
	CER OKL	Cercis canadensis texensis 'Oklahoma'	Oklahoma Texas Redbud	24" box	2	Medium
	CHI TMR	Chilopsis linearis 'Timeless Beauty'	Desert Willow	15 gal	7	Low
	CIT XCL	Citrus x clementina	Clementine Orange	15 gal	1	Medium
	GEI PAR	Geijera parviflora	Australian Willow	15 gal	4	Medium
	PRU AKE	Prunus x yedoensis 'Akebono'	Akebono Yoshino Cherry	24" box	1	Medium
	QUE SHU	Quercus shumardii	Shumard Oak	24" box	3	Medium
	ULM DRA	Ulmus parvifolia 'Drake'	Drake Lacebark Elm	15 gal	7	Medium
A	SHRUBS ALL GIG	BOTANICAL NAME Allium giganteum	COMMON NAME Giant Allium	SIZE Bulb	QTY 71	Water Use Low
	CAL KAR	Calamagrostis x acutiflora 'Karl Foerster'	Karl Foerster Feather Reed Grass	5 gal	103	Low
	CAL LIN	Callistemon viminalis 'Little John'	Little John Weeping Bottlebrush	5 gal	8	Low
*	CAR ELI	Carpenteria californica 'Elizabeth'	Elizabeth Bush Anemone	5 gal	37	Low
C	CHO TEC	Chondropetalum tectorum	Small Cape Rush	5 gal	32	Low
GH	CHO ELC	Chondropetalum tectorum 'El Campo'	El Campo Small Cape Rush	5 gal	27	Low
C	CIS PUL	Cistus x pulverulentus 'Sunset'	Sunset Rockrose	5 gal	20	Low
DIA	DIA TDU	Dianella revoluta 'Little Rev'	Dianella	5 gal	103	Low
	FES MAI	Festuca mairei	Atlas Fescue	5 gal	171	Low
	KNI FLA	Kniphofia uvaria 'Flamenco'	Flamenco Red Hot Poker	1 gal	16	Low
L	LEU COM	Leucophyllum frutescens 'Compacta'	Compact Texas Ranger	5 gal	8	Low
	PHL MIS	Phlox maculata 'Miss Lingard'	Miss Lingard Meadow Phlox	4" pot	5	Low
POL	POL MUN	Polystichum munitum	Western Sword Fern	5 gal	8	Low
R	RHA MIN	Rhaphiolepis umbellata 'Minor'	Yedda Hawthorn	5 gal	27	Low
X	SAL MID	Salvia leucantha 'Midnight'	Mexican Bush Sage	1 gal	32	Low
	VINES FIC PUM	BOTANICAL NAME Ficus pumila	COMMON NAME Creeping Fig	SIZE 5 gal	QTY 7	Water Use Medium
	GROUND COVERS ACH PAP	BOTANICAL NAME Achillea millefolium 'Paprika'	COMMON NAME Paprika Common Yarrow	CONT 4" pots	SPACING 12" o.c.	QTY 41 sf	Water Use Low
	BAC TWI	Baccharis pilularis 'Twin Peaks#2'	Twin Peaks #2 Coyote Brush	1 gal	48" o.c.	1,313 sf	Low
	CAR DIV	Carex divulsa	European Grey Sedge	1 gal	36" o.c.	1,926 sf	Low
	JUN BLU	Juniperus conferta 'Blue Pacific'	Blue Pacific Shore Juniper	1 gal	42" o.c.	1,236 sf	Low
	LIR CRE	Liriope spicata	Creeping Lilyturf	1 gal	24" o.c.	208 sf	Medium
	NEP WAL	Nepeta x faassenii 'Walkers Low'	Walkers Low Catmint	1 gal	20" o.c.	99 sf	Low
	STA SIL	Stachys byzantina 'Silver Carpet'	Silver Carpet Lamb's Ears	4" pots	12" o.c.	68 sf	Low
	TEU PRO	Teucrium chamaedrys 'Prostratum'	Prostrate Germander	1 gal	30" o.c.	260 sf	Low
	WES LOW	Westringia fruticosa 'Low Horizon'	Low Horizon Coast Rosemary	1 gal	36" o.c.	561 sf	Low
	TURF TUR BOL	BOTANICAL NAME Turf Sod Bolero Plus	COMMON NAME Fescue blend	CONT Sod	SPACING	QTY 2,100 sf	Water Use Medium

Misc. Landscape Materials

All shrub and groundcover areas shall be top-dressed with a 3" layer of mulch derived from recycled wood chips or arbor chips from tree trimming. Mulch shall be 2" minus in length and not greater than 3/8" in thickness, and shall be dark brown in color. Contractor shall provide sample for approval prior to installation. Shredded redwood or cedar bark ("Gorilla-Hair") is not acceptable.

Boulders — Varied size (12"-48") moss rock boulders placed in loose random groups to appear as natural rock outcroppings. Boulders to be approved by Landscape Architect prior to installation. Install per Detail W on Sheet L6.1.

Bark Mulch Only Area — Bark mulch only areas to receive mulch treatment per Misc. Landscape materials note above.

Tree Root Barriers

All trees denoted with the root barrier symbol and/or within five (5) feet of hardscape are to have DeepRoot Model #UB 18-2 root barriers installed along the inside edge of the adjacent sidewalk or curb. Length of linear root barrier shall be 16 linear feet (8 panels) and shall be centered on tree.

Root Solutions RS-18 may be used as an alternate. Use the same quantities per tree sizes as listed above. 1(800)554-0914

See detail V, sheet L6.1

Planting Detail References

For Trees, refer to Detail R, sheet L6.1
For Shrubs, refer to Detail S, Sheet L6.1
For Groundcovers, refer to Detail T, Sheet L6.1 for layout and Detail S, Sheet L6.1 for installation

Note:

Contractor to include in the bid (as separate line item) for the purchase and installation of the following plant quantities. Plants will be selected by Landscape Architect and installed by contractor after substantial completion of the landscape planting. Plant species will be commonly available nursery stock. These plants are in addition to the symbols shown on the plans.

10 - 15 Gallon Shrubs
50 - 5 Gallon Shrubs
75 - 1 Gallon Shrubs

Water Efficient Landscape Ordinance (WELO)

Planting and irrigation have been designed to be compliant with the Water Efficient Landscape Ordinance. The contractor shall not make substitutions of irrigation product or placement of product or plant species and cultivars without written consent of the Landscape Architect. The contractor shall be responsible for making all modifications to ensure the requirements of the Water Efficient Landscape Ordinance are met. If any changes are made, Water use calculations as described on these plans must be met. The signature on this plan conurs that "I have complied with the criteria of the Water Efficient Landscape Ordinance and applied them accordingly for the efficient use of water in the irrigation and planting design plan."

NORTH
Scale: 1" = 10'-0"
0 5' 10' 20'

811 Know what's below. Call before you dig.
Dial 811 or 800-227-2600

Division of the State Architect
APPROVED
DIV. OF THE STATE ARCHITECT
APP: 02-119316 INC:
REVIEWED FOR
SS☐ FLS☐ ACS☒
DATE: 03/24/2022

Office of the State Fire Marshal

OFFICE OF THE STATE FIRE MARSHAL
APPROVED FIRE AND PANIC ONLY
03/14/22
21-0498
Approval of this plan does not authorize or approve any omission or deviation from applicable regulations. Final approval is subject to field inspection. One set of approved plans shall be available on the project site at all times.

CSUS CHILD DEVELOPMENT CENTER

CALIFORNIA STATE UNIVERSITY, STANISLAUS
ONE UNIVERSITY CIRCLE
TURLOCK, CA 95382

ehdd.
PIER 1, BAY 2
THE EMBARCADERO
SAN FRANCISCO, CA 94111
INFO@EHDD.COM
+1 415-285-9193

Consultant

KLA LANDSCAPE ARCHITECTURE PLANNING
KLA, Inc.
151 N. Norlin St.,
Sonora Ca, 95370
(209)532-2856
www.kla-ca.com

Stamp

LICENSED LANDSCAPE ARCHITECT
S. HARRIS
03.31.2023 Renewal Date
12.06.2021 Date
STATE OF CALIFORNIA

Printing	Date
95% CONSTRUCTION DOCUMENTS	06.25.2021
PERMIT SET -	08.16.2021
PERMIT SET - DSA V2	12.15.2021
PERMIT SET - SFM	12.21.2021

Revisions and Description	Date

Scale
1" = 10'-0"
Drawn by
MBH
EHDD Job Number
KLA 20-2266

Sheet Title
Planting Plan

Sheet Number
L4.1 V3

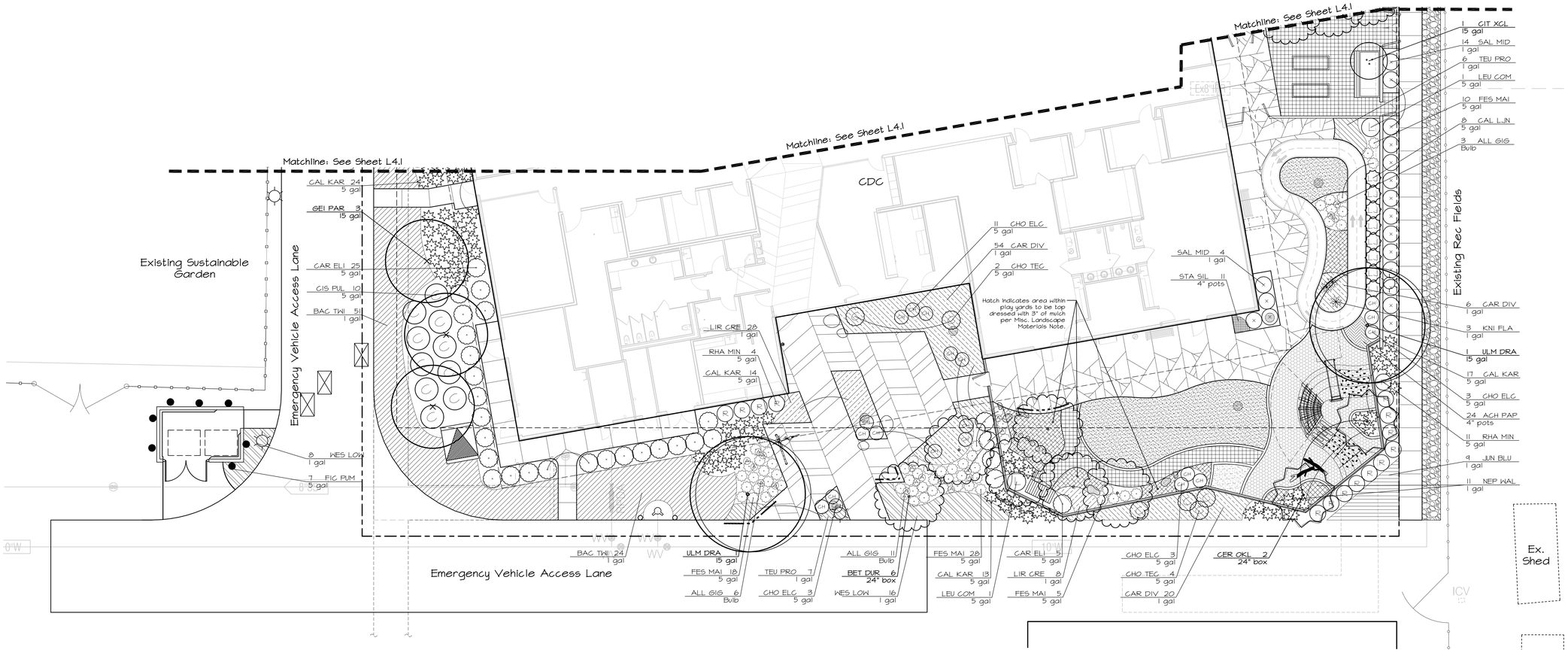

PLANT SCHEDULE

	TREES	BOTANICAL NAME	COMMON NAME	CONT		QTY	Water Use
	ACE OGL	Acer rubrum 'October Glory'	October Glory Red Maple	24" box		1	Medium
	BET DUR	Betula nigra 'BNMTF' TM	Dura Heat River Birch	24" box		11	Low
	CER OKL	Cercis canadensis texensis 'Oklahoma'	Oklahoma Texas Redbud	24" box		2	Medium
	CHI TMR	Chilopsis linearis 'Timeless Beauty'	Desert Willow	15 gal		7	Low
	CIT XCL	Citrus x clementina	Clementine Orange	15 gal		1	Medium
	GEI PAR	Geijera parviflora	Australian Willow	15 gal		4	Medium
	PRU AKE	Prunus x yedoensis 'Akebono'	Akebono Yoshino Cherry	24" box		1	Medium
	QUE SHU	Quercus shumardii	Shumard Oak	24" box		3	Medium
	ULM DRA	Ulmus parvifolia 'Drake'	Drake Lacebark Elm	15 gal		7	Medium
	SHRUBS	BOTANICAL NAME	COMMON NAME	SIZE		QTY	Water Use
A	ALL GIG	Allium giganteum	Giant Allium	Bulb		71	Low
	CAL KAR	Calamagrostis x acutiflora 'Karl Foerster'	Karl Foerster Feather Reed Grass	5 gal		103	Low
LJN	CAL LJN	Callistemon viminalis 'Little John'	Little John Weeping Bottlebrush	5 gal		8	Low
	CAR ELI	Carpenteria californica 'Elizabeth'	Elizabeth Bush Anemone	5 gal		37	Low
C	CHO TEC	Chondropetalum tectorum	Small Cape Rush	5 gal		32	Low
CH	CHO ELC	Chondropetalum tectorum 'El Campo'	El Campo Small Cape Rush	5 gal		27	Low
C	CIS PUL	Cistus x pulverulentus 'Sunset'	Sunset Rockrose	5 gal		20	Low
DV	DIA TDU	Dianella revoluta 'Little Rev'	Dianella	5 gal		103	Low
	FES MAI	Festuca mairei	Atlas Fescue	5 gal		171	Low
	KNI FLA	Kniphofia uvaria 'Flamenco'	Flamenco Red Hot Poker	1 gal		16	Low
L	LEU COM	Leucophyllum frutescens 'Compacta'	Compact Texas Ranger	5 gal		8	Low
	PHL MIS	Phlox maculata 'Miss Lingard'	Miss Lingard Meadow Phlox	4" pot		5	Low
PM	POL MUN	Polystichum munitum	Western Sword Fern	5 gal		8	Low
R	RHA MIN	Rhaphiolepis umbellata 'Minor'	Yedda Hawthorn	5 gal		27	Low
X	SAL MID	Salvia leucantha 'Midnight'	Mexican Bush Sage	1 gal		32	Low
	VINES	BOTANICAL NAME	COMMON NAME	SIZE		QTY	Water Use
	FIC PUM	Ficus pumila	Creeping Fig	5 gal		7	Medium
	GROUND COVERS	BOTANICAL NAME	COMMON NAME	CONT	SPACING	QTY	Water Use
	ACH PAP	Achillea millefolium 'Paprika'	Paprika Common Yarrow	4" pots	12" o.c.	41 sf	Low
	BAC TWI	Baccharis pilularis 'Twin Peaks#2'	Twin Peaks #2 Coyote Brush	1 gal	48" o.c.	1,313 sf	Low
	CAR DIV	Carex divulsa	European Grey Sedge	1 gal	36" o.c.	1,926 sf	Low
	JUN BLU	Juniperus conferta 'Blue Pacific'	Blue Pacific Shore Juniper	1 gal	42" o.c.	1,236 sf	Low
	LIR CRE	Liriope spicata	Creeping Lilyturf	1 gal	24" o.c.	208 sf	Medium
	NEP WAL	Nepeta x faassenii 'Walkers Low'	Walkers Low Catmint	1 gal	20" o.c.	99 sf	Low
	STA SIL	Stachys byzantina 'Silver Carpet'	Silver Carpet Lamb's Ears	4" pots	12" o.c.	68 sf	Low
	TEU PRO	Teucrium chamaedrys 'Prostratum'	Prostrate Germander	1 gal	30" o.c.	260 sf	Low
	WES LOW	Westringia fruticosa 'Low Horizon'	Low Horizon Coast Rosemary	1 gal	36" o.c.	561 sf	Low
	TURF	BOTANICAL NAME	COMMON NAME	CONT	SPACING	QTY	Water Use
	TUR BOL	Turf Sod Bolero Plus	Fescue blend	Sod		2,100 sf	Medium

Misc. Landscape Materials

All shrub and groundcover areas shall be top-dressed with a 3" layer of mulch derived from recycled wood chips or arbor chips from tree trimming. Mulch shall be 2" minus in length and not greater than 3/8" in thickness, and shall be dark brown in color. Contractor shall provide sample for approval prior to installation. Shredded redwood or cedar bark ("Gorilla-Hair") is not acceptable.

Boulders — Varied size (12"-48") moss rock boulders placed in loose random groups to appear as natural rock outcroppings. Boulders to be approved by Landscape Architect prior to installation. Install per Detail W on Sheet L6.1.

Bark Mulch Only Area — Bark mulch only areas to receive mulch treatment per Misc. Landscape materials note above.

Tree Root Barriers

All trees denoted with the root barrier symbol and/or within five (5) feet of hardscape are to have DeepRoot Model #UB 18-2 root barriers installed along the inside edge of the adjacent sidewalk or curb. Length of linear root barrier shall be 16 linear feet (8 panels) and shall be centered on tree.

Root Solutions RS-18 may be used as an alternate. Use the same quantities per tree sizes as listed above. 1(800)554-0414

See detail V, sheet L6.1

Planting Detail References

For Trees, refer to Detail R, sheet L6.1
For Shrubs, refer to Detail S, Sheet L6.1
For Groundcovers, refer to Detail T, Sheet L6.1 for layout and Detail S, Sheet L6.1 for installation

Note:

Contractor to include in the bid (as separate line item) for the purchase and installation of the following plant quantities. Plants will be selected by Landscape Architect and installed by contractor after substantial completion of the landscape planting. Plant species will be commonly available nursery stock. These plants are in addition to the symbols shown on the plans.

10 - 15 Gallon Shrubs
50 - 5 Gallon Shrubs
75 - 1 Gallon Shrubs

Water Efficient Landscape Ordinance (WELO)

Planting and irrigation have been designed to be compliant with the Water Efficient Landscape Ordinance. The contractor shall not make substitutions of irrigation product or placement of product or plant species and cultivars without written consent of the Landscape Architect. The contractor shall be responsible for making all modifications to ensure the requirements of the Water Efficient Landscape Ordinance are met if any changes are made. Water use calculations as described on these plans must be met. The signature on this plan concurs that "I have complied with the criteria of the Water Efficient Landscape Ordinance and applied them accordingly for the efficient use of water in the irrigation and planting design plan."

NORTH
Scale: 1" = 10'-0"
0 5' 10' 20

811 Know what's below. Call before you dig.
Dial 811 or 800-227-2600

Division of the State Architect

APPROVED
DIV. OF THE STATE ARCHITECT
APP: 02-119316 INC:
REVIEWED FOR
SS☐ FLS☐ ACS☑
DATE: 03/24/2022

Office of the State Fire Marshal

OFFICE OF THE STATE FIRE MARSHAL
APPROVED FIRE AND PANIC ONLY
03/14/22
21-0498
Approval of this plan does not authorize or approve any omission or deviation from applicable regulations. Final approval is subject to field inspection. One set of approved plans shall be available on the project site at all times.

CSUS CHILD DEVELOPMENT CENTER

CALIFORNIA STATE UNIVERSITY, STANISLAUS
ONE UNIVERSITY CIRCLE
TURLOCK, CA 95382

ehdd.

PIER 1, BAY 2
THE EMBARCADERO
SAN FRANCISCO, CA 94111

INFO@EHDD.COM
+1 415-285-9193

Consultant

KLA LANDSCAPE ARCHITECTURE PLANNING
KLA, Inc.
151 N. Norlin St.,
Sonora Ca, 95370
(209)532-2856
www.kla-ca.com

Stamp

LICENSED LANDSCAPE ARCHITECT
Mark Hankins
03.31.2023
Renewal Date
12.06.2021
Date
STATE OF CALIFORNIA

Printing	Date
95% CONSTRUCTION DOCUMENTS	06.25.2021
PERMIT SET	08.16.2021
PERMIT SET - DSA V2	12.15.2021
PERMIT SET - SFM	12.21.2021

Revisions and Description	Date

Scale
1" = 10'-0"
Drawn by
MBH
EHDD Job Number
KLA 20-2266

Sheet Title
Planting Plan

Sheet Number
L4.2 V3

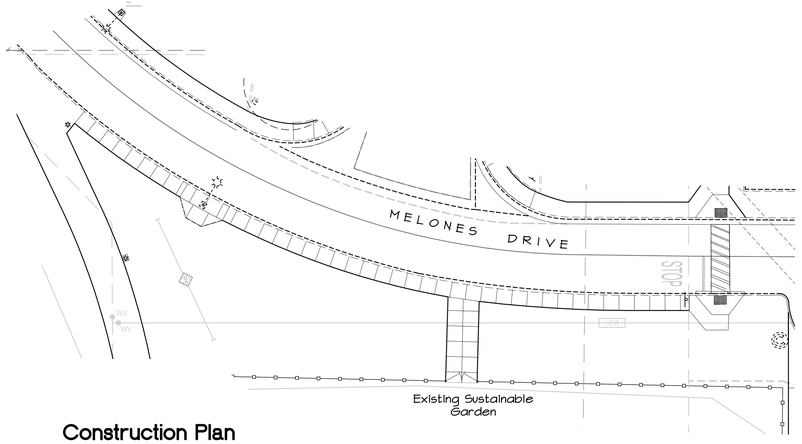

Construction Plan

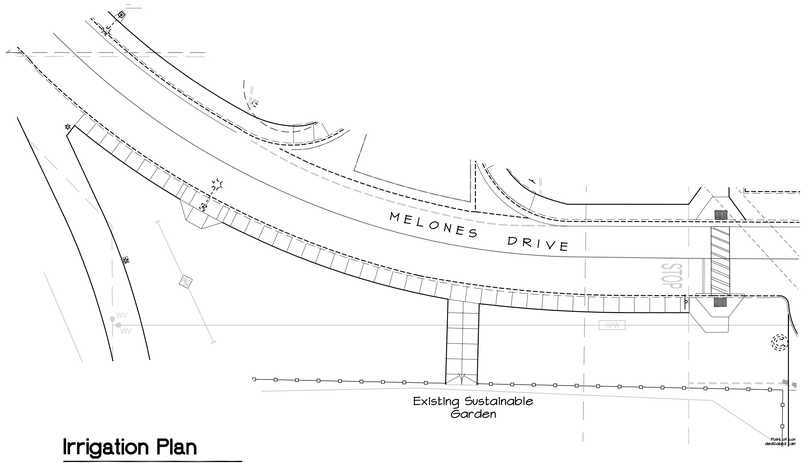

Irrigation Plan

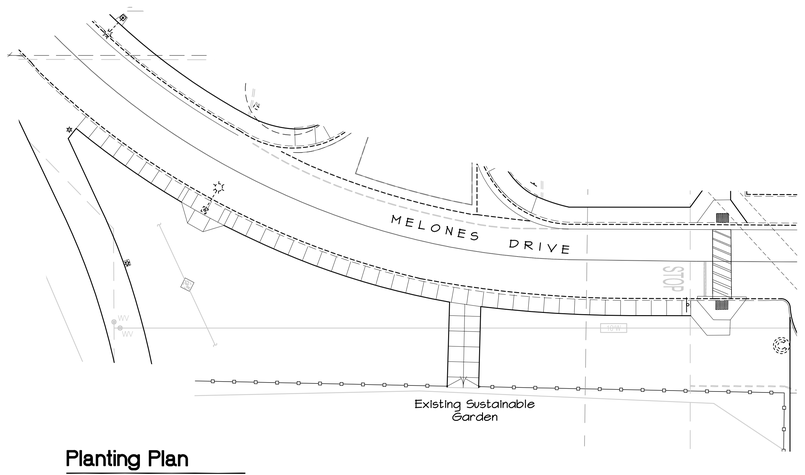

Planting Plan

Construction Callouts

No.	Detail	Item Description
6	A and B, Sheet L2.1	Natural gray medium broom finish concrete paving. Install troweled score joints and expansion joints as shown on plans. Expansion joints shall be maximum 20' on center.

See L1 series for additional notes

Irrigation Legend

Shrub and Groundcover Area Irrigation: Point-source drip irrigation with 5/8" dia. (0.700 O.D.) polyethylene supply tubing and 1/4" vinyl distribution tubing (see Irrigation Equipment Schedule for manufacturer and model)

See L4 series for additional notes

Preliminary Planting Palette

Trees

Deciduous Parking Lot/Street Shade Trees - 15 gallon.

Pistacia chinensis 'Keith Davey'	Chinese Pistache
Platanus x acerfolia	London Plane Tree
Quercus coccinea	Scarlet Oak
Ulmus parvifolia	Chinese Elm

Groundcover

Spreading Low Groundcovers - 1 gal @ 48" o.c.

Archtostaphylus 'Emerald Carpet'	Manzanita
Baccharis pilularis	Dwarf Coyote Bush
Cotoneaster dammeri 'Lowfast'	Cotoneaster
Dymondia margaretae	Silver Carpet
Juniperus sabina 'Cultivars'	Juniper
Myoporum parvifolia	Myoporum
Verbena spp.	Verbena

This plan represents the design style and theme of the landscape design and planting. These plans are preliminary and may change through the design process. The final planting plan may not contain all of the above plants in the sizes as shown. Additionally some new plant species may be used in the final design. This plan does however indicate the quantity of trees and the overall level of landscape development that will be carried through with the final design.

See L5 series for additional notes

Water Efficient Landscape Ordinance (WELO)

Planting and Irrigation have been designed to be compliant with the Water Efficient Landscape Ordinance. The contractor shall not make substitutions of irrigation product or placement of product or plant species and cultivars without written consent of the Landscape Architect. The contractor shall be responsible for making all modifications to ensure the requirements of the Water Efficient Landscape Ordinance are met if any changes are made. Water use calculations as described on these plans must be met. The signature on this plan concurs that "I have complied with the criteria of the Water Efficient Landscape Ordinance and applied them accordingly for the efficient use of water in the irrigation and planting design plan."

NORTH
Scale: 1" = 20'-0"
0' 10' 20' 40'

Division of the State Architect

APPROVED
DIV. OF THE STATE ARCHITECT
APP: 02-119316 INC:
REVIEWED FOR
SS☐ FLS☐ ACS☑
DATE: 03/24/2022

Office of the State Fire Marshal

OFFICE OF THE STATE FIRE MARSHAL
APPROVED FIRE AND PANIC ONLY
03/14/22
21-0498
Approval of this plan does not authorize or approve any omission or deviation from applicable regulations. Final approval is subject to field inspection. One set of approved plans shall be available on the project site at all times.

CSUS CHILD DEVELOPMENT CENTER

CALIFORNIA STATE UNIVERSITY, STANISLAUS
ONE UNIVERSITY CIRCLE
TURLOCK, CA 95382

ehdd.

PIER 1, BAY 2
THE EMBARCADERO
SAN FRANCISCO, CA 94111

INFO@EHDD.COM
+1 415-285-9193

Consultant

KLA, Inc.
151 N. Norlin St.,
Sonora Ca, 95370
(209)532-2856
www.kla-ca.com

Stamp

LICENSED LANDSCAPE ARCHITECT
MARK B. HANNA
03.31.2023
Renewal Date
12.06.2021
Date
STATE OF CALIFORNIA

Printing	Date
95% CONSTRUCTION DOCUMENTS	06.25.2021
PERMIT SET	08.16.2021
PERMIT SET - DSA V2	12.15.2021
PERMIT SET - SFM	12.21.2021

Revisions and Description	Date

Scale
1" = 20'-0"
Drawn by
MBH
EHDD Job Number
KLA 20-2266

Sheet Title
Site Infrastructure Landscape Plan
Sheet Number
L5.1 **V3**

Groundcover Planting with Triangular Spacing | T

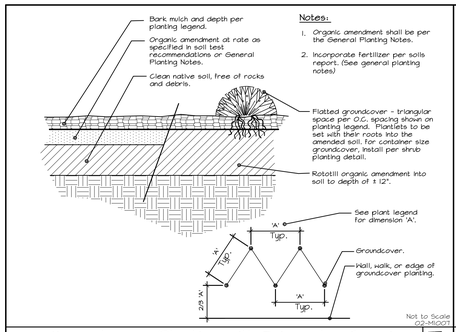

Notes:

1. Organic amendment shall be per the General Planting Notes.
2. Incorporate fertilizer per soils report. (See general planting notes)

Non-Potable Remote Control Drip Valve | K

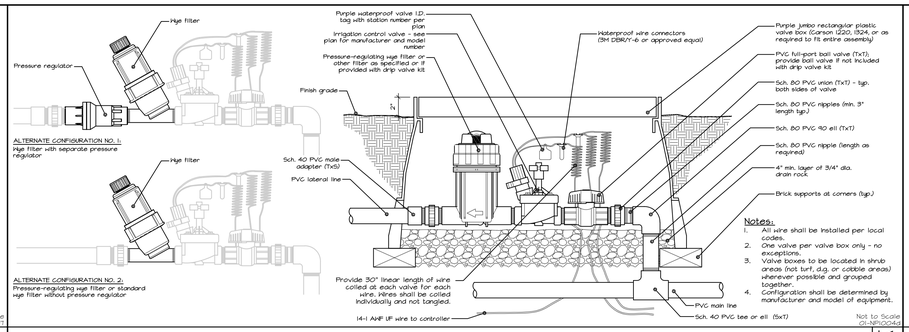

Notes:

1. All wire shall be installed per local codes.
2. One valve per valve box only - no exceptions.
3. Valve boxes to be located in shrub areas (not turf, d.g. or cobble areas) wherever possible and grouped together.
4. Configuration shall be determined by manufacturer and model of equipment.

No Detail | F

Drip Tubing and Emitter Connections | A

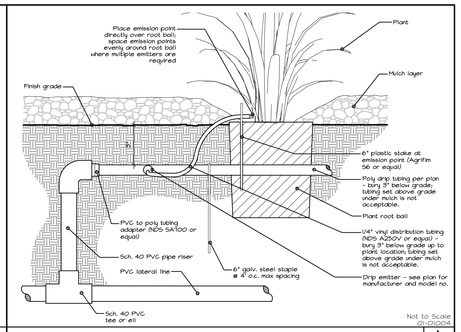

Vine Planting | U

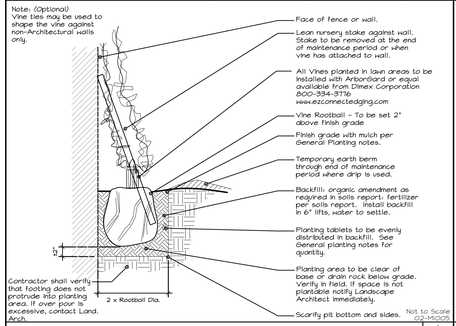

Piping and Wiring | P

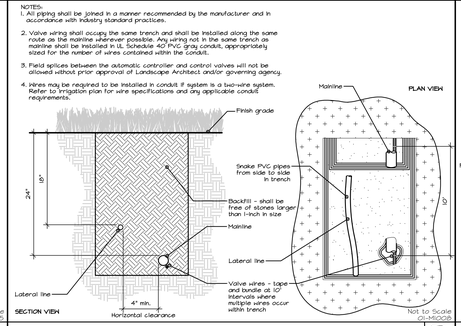

Non-Potable Irrigation Control Valve | L

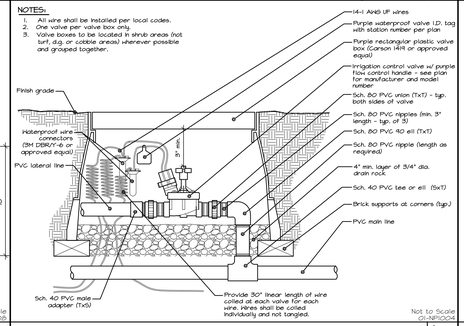

No Detail | G

Drip Emitter Placement | B

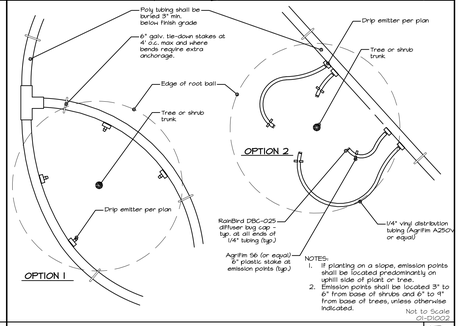

Trunk Protection and Linear Root Barrier | V

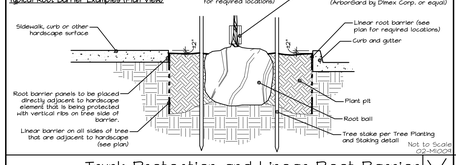

Irrigation Sleeve | Q

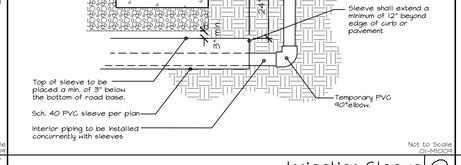

Quick Coupler Valve (Non-Potable) | M

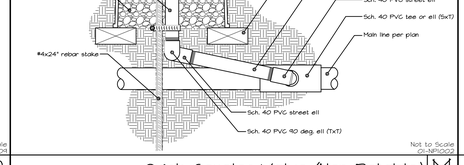

No Detail | H

Turf and Shrub Pop-Up Spray Head | C

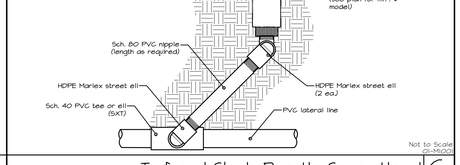

Boulder Placement | W

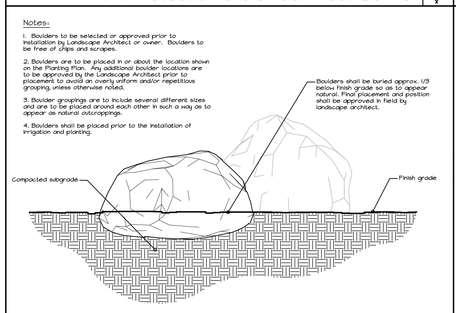

Broadleaf Tree Planting and Staking | R

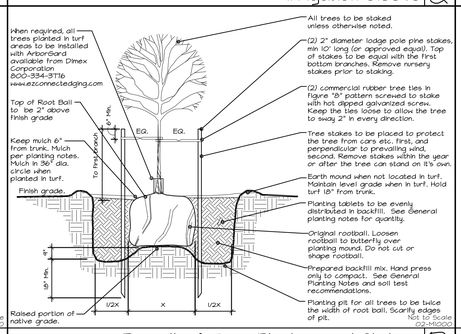

Gate valve - 3" and smaller (Non-Potable) | N

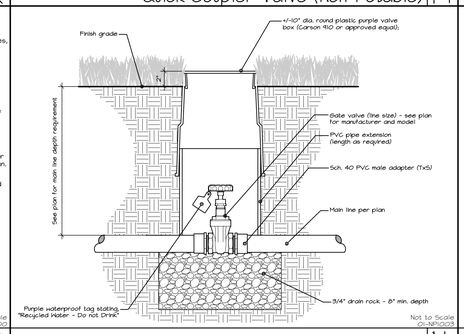

No Detail | I

No Detail | D

No Detail | X

Shrub Planting | S

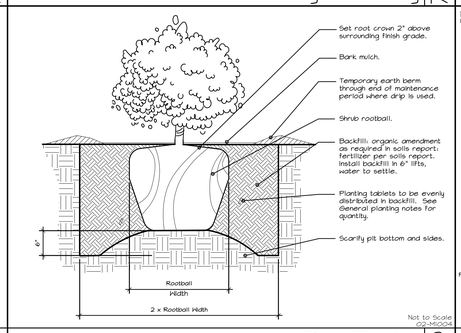

Garden Valve in Raised Planter | O

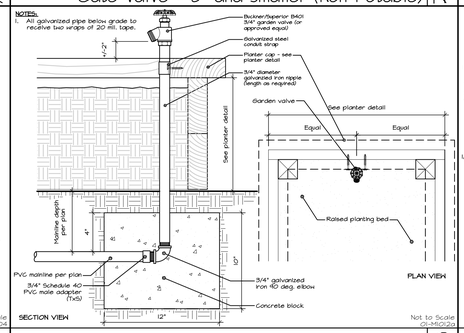

Root Watering System with Supplemental Bubbler | J

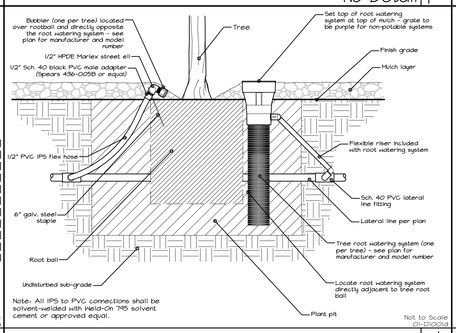

No Detail | E

Division of the State Architect

APPROVED
DIV. OF THE STATE ARCHITECT
APP: 02-119316 INC:
REVIEWED FOR
SS☐ FLS☐ ACS☒
DATE: 03/24/2022

Office of the State Fire Marshal

OFFICE OF THE STATE FIRE MARSHAL
APPROVED FIRE AND PANIC ONLY
03/14/22
21-0498
Approval of this plan does not authorize or approve any omission or deviation from applicable regulations. Final approval is subject to field inspection. One set of approved plans shall be available on the project site at all times.

CSUS CHILD DEVELOPMENT CENTER

CALIFORNIA STATE UNIVERSITY, STANISLAUS
ONE UNIVERSITY CIRCLE
TURLOCK, CA 95382

ehdd.

PIER 1, BAY 2
THE EMBARCADERO
SAN FRANCISCO, CA 94111

INFO@EHDD.COM
+1 415-285-9193

Consultant

KLA LANDSCAPE ARCHITECTURE PLANNING
KLA, Inc.
151 N. Norlin St.,
Sonora Ca, 95370
(209)532-2856
www.kla-ca.com

Stamp

LICENSED LANDSCAPE ARCHITECT
C. HARVEY
STATE OF CALIFORNIA
03.31.2023
Renewal Date
12.06.2021
Date

Printing	Date
95% CONSTRUCTION DOCUMENTS	06.25.2021
PERMIT SET	08.16.2021
PERMIT SET - DSA V2	12.15.2021
PERMIT SET - SFM	12.21.2021

Revisions and Description	Date

Scale
1" = 20'-0"
Drawn by
MBH
EHDD Job Number
KLA 20-2266

Sheet Title
Landscape Details

Sheet Number
L6.1 **V3**

Water Efficient Landscape Ordinance (WELO) Notes:

1. These plans have been prepared to be in compliance with the State-mandated Water Efficient Landscape Ordinance (WELO), which went into effect on December 1, 2015. The following notes reference the requirements of the ordinance and the responsibility of the contractor to install the landscape per the plans, details, and notes; provide the required documentation to the local agency; and provide follow-up correction as required to meet the water efficiency requirements.

2. The landscape contractor shall coordinate with the local jurisdiction to determine who will review and receive the WELO documentation that is required to be provided by the contractor.

Landscape Documentation Package

1. Project Information and signatures - The signature of the landscape architect on these landscape plans is applicable to the statement - "I agree to the best of my ability to comply with the requirements of the water efficient landscape ordinance and submit a complete Landscape Document Package".
2. Water Efficient Landscape Worksheet - See MAWA and ETWU, as well as hydrozone information table on this sheet.
3. Soil management report - See Notes requirements as described below.
4. Landscape Design Plan - See Planting Plans and Details contained within this set of documents.
5. Irrigation Design Plan - See Irrigation Plans and Details contained within this set of documents.
6. Grading Design Plan - To be provided by the civil engineer - See civil engineer's plans.

Soil Management Report

1. After mass grading the contractor shall provide for a soil analysis that shall comply with the requirements provided below. The analysis report is to be forwarded to the landscape architect, owner, and governing jurisdiction.
2. Soil samples shall be collected in accordance with laboratory protocol including adequate sampling depth.
3. At least one sample shall be provided for each 20,000 sf of landscape unless otherwise noted by the landscape architect. Samples shall be taken from different areas of the site as directed by the landscape architect. For multiple landscape installations (i.e. production home developments) a soil sampling rate of 1 in 7 lots or approximately 15%. Large landscape projects shall sample at a rate equivalent to 1 in 7 lots.
4. The Soil Analysis shall include the following:
   - Soil texture
   - Infiltration Rate (determined by lab test or soil texture infiltration rate table).
   - pH
   - Total soluble salts
   - Sodium
   - Percent organic mater
   - Recommendations for soil amendments, fertilizer, etc. for the type of landscape planting proposed.
5. Soil Analysis shall be conducted by an approved soil testing lab. The following are acceptable (but not required) labs:
   Sunland Analytical, 11149 Sunrise Gold Circle, Suite 10, Rancho Cordova, CA 95742, (916)852-8557, www.sunland-analytical.com.
   Soil and Plant Lab, 1101 S. Winchester Blvd., Suite G-173, San Jose, CA 95128, (408)727-0330, www.soilandplantlaboratory.com.
   Soil and Plant Lab, 4741 East Hunter Ave., Suite A, Anaheim, CA 92807, (714)282-8777, www.soilandplantlaboratory.com.
6. The recommendations of the soil analysis are to be implemented in the landscape soil preparation. The contractor shall provide documentation, prior to planting, verifying that recommendations have been implemented to the landscape architect and the governing jurisdiction.

Landscape Design (Planting)

1. The landscape has been designed and plants selected to be compliant with the requirements of the WELO. The contractor shall not make changes without written approval by the landscape architect. If the contractor deviates from the plan and it is not acceptable to the landscape architect, the contractor will be required to make changes at his/her expense to bring the landscape into compliance.
2. Plants have been placed in 'hydrozones' of similar water use requirements. The extent of the hydrozones are delineated by the groups of irrigation circuits as listed in the Hydrozone Table, included with these plans.
3. Turf is not allowed on slopes greater than 25% (4:1).
4. Mulch is required in all planting area except for turf, creeping or rooting groundcovers, direct seeding applications, cobble areas, or other areas specifically noted on the plans. The mulch shall be a minimum of 3", but the depth as listed in the planting legend shall take priority.
5. Stabilizing mulches shall be used on all slopes exceeding 4:1. See plan or coordinate with landscape architect.
6. Soil amendments shall be incorporated per the soil report. Compost must be applied at a rate of 4 yards per 1,000 square feet of permeable area. Compacted soils must be transformed to a friable condition.
7. The signature on the landscape plans is applicable to the statement - "I have complied with the criteria of the ordinance and applied them for the efficient use of water in the landscape design plan."

Irrigation Design

1. The irrigation water service shall be on a separate meter or submeter than the domestic service, this is required for residential landscapes over 5,000 square feet and non-residential landscapes over 1,000 square feet.
2. The irrigation controller (clock) shall be a 'smart' controller using evapotranspiration or soil moisture sensor data to automatically adjust run times based on landscape area water needs.
3. The irrigation system has been designed for each emission device to operate within the manufacturer's recommended pressure range for optimal performance. If the water pressure at the service connection is different than what is shown on the plans the contractor shall notify the landscape architect prior to installation of the irrigation system. Contractor shall check available water pressure before any irrigation installation. Pressure regulation is required to ensure correct and efficient operation.
4. Pressure regulators or booster pumps shall be installed if needed to modify available pressure for the optimal performance of the irrigation emission devices. All emission devices must meet the American National Standards Institute Standard. See specifications on the plans and refer to note #3 above.
5. A rain sensor shall be installed and tied to the controller - See plan for selection.
6. Gate valve(s) shall be installed directly downstream of the service connection(s).
7. An approved backflow preventer shall be installed at the irrigation service connection. See plan.
8. Check valves shall be installed in all heads at the low points of a circuit where water within the piping may drain out of the head when the system is done operating - See plan.
9. Flow sensors shall be installed to detect and report high flow conditions for landscape areas greater than 5,000 square feet.
10. Master Valves shall be installed to prevent water waste in the event of breakage or vandalism to the irrigation system, except where sprinklers can be individually controlled.
11. The irrigation circuits have been designed to correspond to the planting hydrozones. Changes to the irrigation layout and types of emission devices are not to be made without the written consent of the landscape architect.
12. The overall irrigation system has been designed to be a minimum of 75% efficient. Total water demand of established landscape has been designed to use less water than the Maximum Applied Water Allowance (MAWA). See Irrigation Schedule and Irrigation Water Audit Notes.
13. The irrigation system has been designed so that each circuit has matched precipitation rates within the circuit and high distribution uniformity. The contractor shall not substitute without written consent of the landscape architect.
14. Swing joints shall be installed on all pop-up heads per the plans and details.
15. Areas less than 10' in width have been irrigated with subsurface, drip, or low volume irrigation. If construction site modifications reduce spray irrigated planter areas less than 10' contact the landscape architect.
16. Overhead spray irrigation heads and nozzles are not allowed within 24" of non-permeable paving. This requirement does not apply to irrigation that is adjacent to permeable paving or non-permeable paving that drains into landscape before entering the storm drain system.
17. Sloped planting areas greater than 25% (4:1) have been designed with irrigation whose precipitation rate does not exceed .75"/hour, or another means has been employed and described on the plans.
18. Trees may be designed with a separate deep root bubbler system - See the plans.
19. The signature on the irrigation plans is applicable to the statement - "I have complied with the criteria of the ordinance and applied them accordingly for the efficient use of water in the irrigation design plan."

Grading Design

1. See the grading and drainage plan as prepared by the civil engineer. The landscape contractor shall maintain the drainage patterns as specified in the grading plans.
2. The site has been graded so that irrigation and normal run-off remains within the property lines, unless otherwise noted on the grading plans.
3. The landscape areas may include bioswales or filtration swales. The landscape contractor shall install these per the requirements of the civil engineer's plans and details with the planting per these plans. Any modifications must be approved in writing by the civil engineer and the landscape architect.

Irrigation Schedule

1. See the irrigation base schedule as included with the irrigation plans and notes. This is a guide - The landscape contractor may need to make modifications based on actual site and landscape conditions. Revised schedule shall be submitted with the Certificate of Completion.
2. Overhead irrigation shall be scheduled between 8:00PM and 10:00AM unless otherwise noted on the plans or more strict watering hours are required by the local jurisdiction.
3. The irrigation run times, length of run, and frequency of run times may need to be adjusted based on infiltration rate of the soil, slope, etc. to avoid run-off.
4. The specific parameters of the site conditions are to be input into the 'smart' controller.

Irrigation Audit

1. All irrigation audits shall be conducted by a certified landscape irrigation auditor or local agency landscape irrigation auditor.
2. The irrigation system shall be audited after it has been installed and 'fine-tuned'. The audit report is to be included with the Certificate of Completion and shall include, but not be limited to:
   - System test for distribution uniformity.
   - Recommendations for any adjustments that may be needed.
   - Preparation of an irrigation schedule.
3. The contractor shall make the adjustments as recommended in the irrigation audit.

Certificate of Completion

1. The contractor shall provide to the governing jurisdiction and the landscape architect a Certificate of Completion that at a minimum includes the following:
   - Date of completion and date of the Certificate.
   - Project Name and Address (or specific location).
   - Project Applicant name, telephone number, and mailing address.
   - Property owner name, telephone number, and mailing address.
2. The landscape contractor shall sign a statement that says the landscape and irrigation has been installed per the approved Landscape Document Package (plans, details, notes, calculations as contained within this plan set.
3. If there have been modifications to the layout and/or design of the landscape and irrigation, the contractor shall include with the Certificate of Completion a set of as-built plans or record drawings that reflect the modifications. The modified landscape and irrigation must remain in compliance with the WELO.
4. The Certificate of Completion shall include the initial irrigation audit that shows the irrigation is in compliance with the irrigation efficiency requirements of WELO (see audit information within this set of notes). The soil analysis report and recommendations and verification that the recommendations have been implemented shall also be submitted, if not included with the Landscape Documentation Package.

Maintenance Schedule

A regular maintenance schedule shall be set up for this project to provide for the health and growth of the plant material as well as the efficiency of the irrigation system. The following is a minimum list of items that are to be addressed and maintained on a regular basis.

1. The irrigation system shall be maintained on a regular basis to ensure efficiency. All heads, valves, and other equipment shall be checked and adjusted to avoid overspray. All leaks are to be repaired as soon as possible. Replaced and repaired irrigation equipment is to be done with originally specified equipment or equipment with matching precipitation rates.

2. Irrigation emission devices are to be checked and repaired as needed to ensure minimal overspray, no leaks, and efficient operation. Drip emission devices (emitters) may need to be adjusted as the planting matures and the water needs change. Emitters are to be reviewed annually (at a minimum) with replacements provided for plants that may be getting to much or too little water.

3. The controller is to be checked and adjusted as needed to ensure there is minimal run-off while meeting the water requirements of the plants.

4. Turf is to be mowed on a regular basis to keep the height at an appropriate level. Turf areas are also to be de-thatched and aerated approximately every two years.

5. Shrubs and trees are to be pruned to maintain form and remove dead or dying branches. Trees are to be pruned for form and safety and suckering is to be removed on a regular basis.

6. A regular program of weed and pest control is to be established and followed. Pesticides and herbicides are to be applied only when needed and by a state licensed professional.

7. Bark mulch is to be reapplied as needed to ensure full coverage to maintain water retention in the soil and deter weed growth - see plan for depth of mulch.

Water Efficient Landscape Ordinance (WELO)

Planting and Irrigation have been designed to be compliant with the Water Efficient Landscape Ordinance. The contractor shall not make substitutions of irrigation product or placement of product or plant species and cultivars without written consent of the Landscape Architect. The contractor shall be responsible for making all modifications to ensure the requirements of the Water Efficient Landscape Ordinance are met if any changes are made. Water use calculations as described on these plans must be met. The signature on this plan concurs that "I have complied with the criteria of the Water Efficient Landscape Ordinance and applied them accordingly for the efficient use of water in the irrigation and planting design plan."

Hydrozone Table and ETWU

Reference ETo for Turlock 50.2

ESTIMATED TOTAL WATER USE (ETWU)

Ornamental Landscape

Hydro-zone No.	Zone(s)	Hydrozone Description	Water Use Classification	Plant Factor	Irrigation Method	Hydrozone Area (Square Feet)	Percentage of Landscape	ETAF	ETAF x Area (Square Feet)	Irrigation Efficiency	ETWU
2	6,10	Shrubs	Medium	0.4	Drip Emitters	853.00	6.1%	0.49	421.2	0.81	13110.50
3	4, 5, 7-9, 11, 12	Shrubs	Low	0.3	Drip Emitters	10,051.00	72.2%	0.37	3722.6	0.81	115861.97
4	13, 14	Trees	Medium	0.4	Bubblers	925.00	6.6%	0.4938	456.8	0.81	14217.14
Ornamental Landscape Area Totals						**11,829.00**	**84.9%**		4,600.62		143,189.61

Special Landscape Area (SLA)

Hydro-zone No.	Zone(s)	Hydrozone Description	Water Use Classification	Plant Factor	Irrigation Method	Hydrozone Area (Square Feet)	Percentage of Landscape	ETAF	ETAF x Area (Square Feet)	Irrigation Efficiency	ETWU
1	1-3	Turf - SLA	High	1	Rotary Nozzles	2,100.00	15.1%	1.00	2,100	1	65,360.4
SLA Totals						**2,100.00**	**15.1%**		2,100		65,360.40
Ornamental and SLA Combined Totals						**13,929.00**	**100%**		**6,701**		**208,550.01**

Estimated Total Water Use (ETWU) Summary

Total Ornamental Landscape Area	**11,829.00**	square feet
ETAF x Area	**4,600.62**	square feet
Total SLA	**2,100.00**	square feet
Ornamental Landscape Irrigation Efficiency	**0.81**	efficient
Estimated Total Water Use (ETWU)	**208,550.01**	**gallons**
Maximum Applied Water Allowance (MAWA)	**231,035.01**	gallons

MAWA= (ETo)(0.62)(0.45*LA)+(0.55*SLA)

MAWA= 231,035.01

ETWU is less than MAWA, therefore the system meets the requirements of the Water Efficient Landscape Ordinance (WELO)

Establishment Period Irrigation Schedule

This schedule is based on providing irrigation to keep the soil extra moist as needed to promote root growth for plant establishment. Specific microclimate conditions and observed water needs, soil, slope, sun exposure, etc. will require adjustment of this schedule in the field to meet the unique needs of each circuit. Controller is to be connected to weather sensor and will adjust schedule (run times) automatically after the optimal schedule has been set.

Hydrozone	Circuits	Plant Material	Winter Nov, Dec, Jan, Feb, March	Spring/Fall April, May, Oct	Summer June, July, Aug, Sept
1	1-3	Turf-Rotary Nozzles	4 cycles/month of 20 minutes each	30 cycles/month of 40 minutes each	30 cycles/month of 75 minutes each
2	6, 10	Shrubs-Drip Medium Water Use	4 cycles/month of 20 minutes each	15 cycles/month of 35 minutes each	30 cycles/month of 40 minutes each
3	4, 5, 7-9, 11, 12	Shrubs-Drip Low Water Use	0 cycles/month of 0 minutes each	15 cycles/month of 30 minutes each	30 cycles/month of 25 minutes each
4	13, 14	Trees-Root Bubblers	0 cycles/month of 0 minutes each	5 cycles/month of 10 minutes each	10 cycles/month of 10 minutes each

Established Landscape Irrigation Schedule

This schedule is based on typical seasonal weather conditions. Specific microclimate conditions and observed water needs, soil, slope, sun exposure, etc. will require adjustment of this schedule in the field to meet the unique needs of each circuit. Controller is to be connected to weather sensor and will adjust schedule (run times) automatically after the optimal schedule has been set.

Hydrozone	Circuits	Plant Material	Winter Nov, Dec, Jan, Feb, March	Spring/Fall April, May, Oct	Summer June, July, Aug, Sept
1	1-3	Turf-Rotary Nozzles	0 cycles/month of 0 minutes each	15 cycles/month of 60 minutes each	30 cycles/month of 60 minutes each
2	6, 10	Shrubs-Drip Medium Water Use	0 cycles/month of 0 minutes each	10 cycles/month of 45 minutes each	15 cycles/month of 60 minutes each
3	4, 5, 7-9, 11, 12	Shrubs-Drip Low Water Use	0 cycles/month of 0 minutes each	10 cycles/month of 30 minutes each	15 cycles/month of 40 minutes each
4	13, 14	Trees-Root Bubblers Medium Water Use	0 cycles/month of 0 minutes each	5 cycles/month of 7 minutes each	10 cycles/month of 7 minutes each

Irrigation Valve Table

Valve #	Hydro-zone	Size	Planting Type	Irrigation Type	Irrig. effic.	Precip. Rate	GPM	Pressure
1	1	1"	Turf (SLA)	Rotary Nozzles	.75	NA	8.93	40
2	1	1"	Turf (SLA)	Rotary Nozzles	.75	NA	11.4	40
3	1	1"	Turf (SLA)	Rotary Nozzles	.75	NA	14.3	40
4	3	1"	Shrubs	Drip Emitters	.81	NA	4.93	20
5	3	1"	Shrubs	Drip Emitters	.81	NA	6.89	20
6	2	1"	Shrubs	Drip Emitters	.81	NA	1.90	20
7	3	1"	Shrubs	Drip Emitters	.81	NA	12.79	20
8	3	1"	Shrubs	Drip Emitters	.81	NA	1.76	20
9	3	1"	Shrubs	Drip Emitters	.81	NA	13.6	20
10	2	1"	Shrubs	Drip Emitters	.81	NA	1.73	20
11	3	1"	Shrubs	Drip Emitters	.81	NA	10.59	20
12	3	1"	Shrubs	Precision Spray	.81	NA	3.23	20
13	4	1"	Trees	Bubblers	.81	NA	7.5	20
14	4	1"	Trees	Bubblers	.81	NA	11.0	20

Division of the State Architect

APPROVED
DIV. OF THE STATE ARCHITECT
APP: 02-119316 INC:
REVIEWED FOR
SS☐ FLS☐ ACS☒
DATE: 03/24/2022

Office of the State Fire Marshal

OFFICE OF THE STATE FIRE MARSHAL
APPROVED FIRE AND PANIC ONLY
03/14/22
21-0498
Approval of this plan does not authorize or approve any omission or deviation from applicable regulations. Final approval is subject to field inspection. One set of approved plans shall be available on the project site at all times.

CSUS CHILD DEVELOPMENT CENTER

CALIFORNIA STATE UNIVERSITY, STANISLAUS
ONE UNIVERSITY CIRCLE
TURLOCK, CA 95382

ehdd.

PIER 1, BAY 2
THE EMBARCADERO
SAN FRANCISCO, CA 94111

INFO@EHDD.COM
+1 415-285-9193

Consultant

KLA LANDSCAPE ARCHITECTURE PLANNING
KLA, Inc.
151 N. Norlin St.,
Sonora Ca, 95370
(209)532-2856
www.kla-ca.com

Stamp

LICENSED LANDSCAPE ARCHITECT
03.31.2023
Renewal Date
12.06.2021
Date
STATE OF CALIFORNIA

Printing	Date
95% CONSTRUCTION DOCUMENTS	06.25.2021
PERMIT SET	08.16.2021
PERMIT SET - DSA V2	12.15.2021
PERMIT SET - SFM	12.21.2021

Revisions and Description	Date

Scale
1" = 20'-0"
Drawn by
MBH
EHDD Job Number
KLA 20-2266

Sheet Title
WELO Notes and Calculations

Sheet Number
L7.1 **V3**

12/10/2021 9:25:40 AM

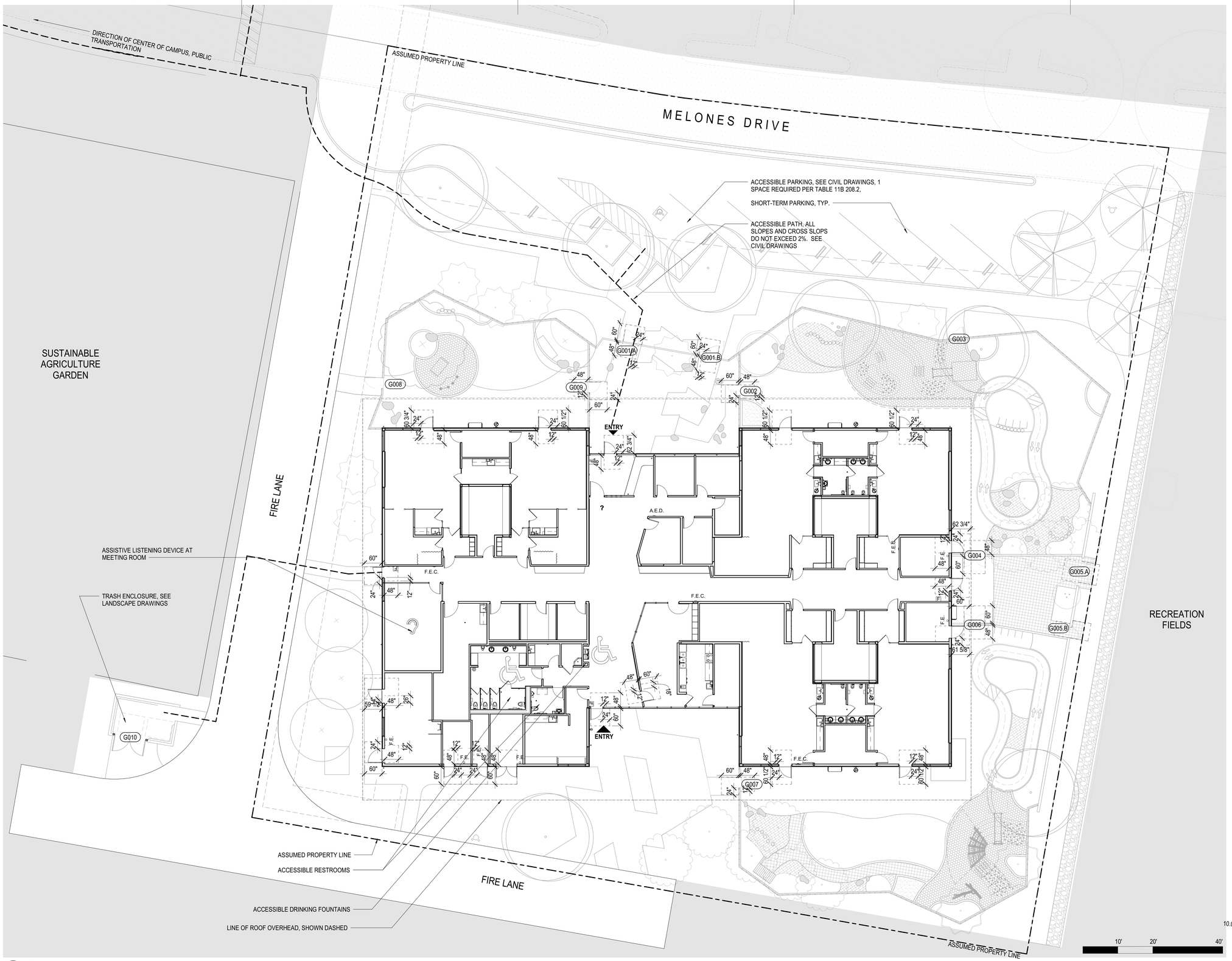

1 A0.11 SITE PLAN
SCALE: 3/32" = 1'-0"

SITE PLAN & ACCESSIBILITY LEGEND

- ▲ ACCESSIBLE BUILDING ENTRANCES
- ACCESSIBLE PATH OF TRAVEL
- ACCESSIBLE FEATURE
- ASSISTIVE LISTENING DEVICE
- G100 GATE TAG
- CHILD DEVELOPMENT CENTER SCOPE OF WORK
- CAMPUS UTLITY INFRASTRUCTURE SCOPE OF WORK

SITE PLAN SHEET NOTES

1. SEE A2.X SERIES FOR BUILDING INFORMATION
2. SEE CIVIL PLANS FOR SITE AND BUILDING LOCATION INFORMATION
3. SEE LANDSCAPE PLANS FOR ADDITIONAL SITE INFORMATION
4. SEE G0.05 FOR FIRE ACCESS INFORMATION
5. ALL ITEMS OUTSIDE OF CHILD DEVELOPMENT CENTER SCOPE OF WORK SHALL BE CONSIDERED PART OF THE CAMPUS INFRASTRUCTURE SCOPE U.O.N.
6. ALL ITEMS WITHIN THE CHILD DEVELOPMENT CENTER SCOPE OF WORK SHALL BE CONSIDERED PART OF THE PROJECT SCOPE U.O.N.

C:\Users\l.quinones\OneDrive - EHDD\Documents\20020-A-CSU STANISLAUS CDC- CENTRAL_l.quinones.rvt

Division of the State Architect

APPROVED
DIV. OF THE STATE ARCHITECT
APP: 02-119316 INC:
REVIEWED FOR
SS☐ FLS☐ ACS☑
DATE: 03/24/2022

Office of the State Fire Marshal

OFFICE OF THE STATE FIRE MARSHAL
APPROVED FIRE AND PANIC ONLY
03/14/22
21-0498
Approval of this plan does not authorize or approve any omission or deviation from applicable requirements. Final approval is subject to field inspection. One set of approved plans shall be available on the project site at all times.

CSUS CHILD DEVELOPMENT CENTER

CALIFORNIA STATE UNIVERSITY, STANISLAUS
ONE UNIVERSITY CIRCLE
TURLOCK, CA 95382

ehdd.

PIER 1, BAY 2
THE EMBARCADERO
SAN FRANCISCO, CA 94111

INFO@EHDD.COM
+1 415-285-9193

Consultant

Stamp

LICENSED ARCHITECT
JENNIFER K DEVLIN
No. 17341
Ren. 5-31-23
STATE OF CALIFORNIA

Printing	Date
95% CONSTRUCTION DOCUMENTS	06.25.2021
PERMIT SET	08.16.2021
PERMIT SET - DSA V2	12.15.2021
PERMIT SET - SFM	12.21.2021

Revisions and Description	Date

Scale
As indicated

Drawn by
Author

EHDD Job Number
20020

Sheet Title
SITE PLAN

Sheet Number
A0.11 V3

12/15/2021 11:06:56 PM

DOOR SCHEDULE

DOOR NUMBER	FUNCTION	DOOR SIZE WIDTH	DOOR SIZE HEIGHT	DOOR TYPE	FRAME TYPE	FRAME FINISH	FRAME DETAILS HEAD	FRAME DETAILS JAMB	FRAME DETAILS THRESHOLD	HARDWARE SET	COMMENTS	ACCESS CONTROL
100	Exterior	3' - 6"	7' - 0"	FG-AL	2	PT-4	7/A8.22	6/A8.22	5/A8.22	3.0	PANIC HARDWARE, AUTO OPERATOR	CARD READER ACCESS, LOCKDOWN
101	Interior	3' - 0"	7' - 0"	FG-WD		PT-1	2/A9.21	2/A9.21	-	9.0	WIN-2	CARD READER ACCESS
102	Interior	3' - 0"	7' - 0"	FG-WD		PT-1	2/A9.21	2/A9.21	-	9.0	WIN-2	CARD READER ACCESS
104	Interior	3' - 0"	7' - 0"	FG-WD		PT-1	2/A9.21	2/A9.21	-	9.0	WIN-2	CARD READER ACCESS
105	Interior	3' - 0"	7' - 0"	FG-WD		PT-1	2/A9.21	2/A9.21	-	9.0	WIN-2	CARD READER ACCESS
106	Interior	3' - 0"	7' - 0"	FG-WD		PT-1	2/A9.21	2/A9.21	-	9.0		CARD READER ACCESS
107	Exterior	3' - 6"	7' - 0"	FG-AL	2	PT-4	7/A8.21	6/A8.21	5/A8.21	2.0	HOLD OPEN, WIN-2	CARD READER ACCESS, LOCKDOWN
107	Exterior	3' - 6"	7' - 0"	FG-AL	2	PT-4	7/A8.21	6/A8.21	5/A8.21	2.0	HOLD OPEN, WIN-2	CARD READER ACCESS, LOCKDOWN
107A	Interior	3' - 0"	7' - 0"	FG-WD		PT-2	2/A9.21	2/A9.21	-	10.0	WIN-2	CARD READER ACCESS
108A	Interior	3' - 0"	7' - 0"	F-WD		PT-1	2/A9.21	2/A9.21	-	13.0		
108B	Interior	3' - 0"	7' - 0"	F-WD		PT-1	2/A9.21	2/A9.21	-	13.0		
110	Interior	3' - 0"	7' - 0"	FG-WD		PT-2	2/A9.21	2/A9.21	10/A9.21	10.0	WIN-2	CARD READER ACCESS
111	Exterior	3' - 6"	7' - 0"	FG-AL	2	PT-4	7/A8.21	6/A8.21	5/A8.21	2.0	HOLD OPEN, WIN-2	CARD READER ACCESS, LOCKDOWN
111A	Interior	3' - 0"	7' - 0"	FG-WD		PT-2	2/A9.21	2/A9.21	-	10.0	WIN-2	CARD READER ACCESS
112	Exterior	3' - 6"	7' - 0"	F-HM	2	PT-4	2/A8.23	2/A8.23		7.0		CARD READER ACCESS
113	Exterior	3' - 6"	7' - 0"	FG-AL	2	PT-4	7/A8.21	6/A8.21	5/A8.21	1.0	PANIC HARDWARE W/ DELAYED EGRESS	CARD READER ACCESS, LOCKDOWN, ALARM
114	Exterior	3' - 6"	7' - 0"	F-HM	2	PT-4	2/A8.23	2/A8.23		7.0		CARD READER ACCESS
115	Exterior	3' - 6"	7' - 0"	FG-AL	2	PT-4	7/A8.21	6/A8.21	5/A8.21	2.0	HOLD OPEN, WIN-2	CARD READER ACCESS, LOCKDOWN
115A	Interior	3' - 0"	7' - 0"	FG-WD		PT-2	2/A9.21	2/A9.21	-	10.0	WIN-2	CARD READER ACCESS
116A	Interior	3' - 0"	7' - 0"	F-WD		PT-1	2/A9.21	2/A9.21	-	13.0		
116B	Interior	3' - 0"	7' - 0"	F-WD		PT-1	2/A9.21	2/A9.21	-	13.0		
118	Interior	3' - 0"	7' - 0"	FG-WD		PT-2	2/A9.21	2/A9.21	10/A9.21	10.0	WIN-2	CARD READER ACCESS
119	Exterior	3' - 6"	7' - 0"	FG-AL	2	PT-4	7/A8.21	6/A8.21	5/A8.21	2.0	HOLD OPEN, WIN-2	CARD READER ACCESS, LOCKDOWN
119A	Interior	3' - 0"	7' - 0"	FG-WD		PT-2	2/A9.21	2/A9.21	-	10.0	WIN-2	CARD READER ACCESS
120	Interior	3' - 0"	7' - 0"	GT-EX9						10.0		CARD READER ACCESS
120A	Interior	3' - 0"	7' - 0"	N-WD		PT-1	2/A9.21	2/A9.21	-	13.0		
120B	Interior	3' - 0"	7' - 0"	FG-WD						10.0		
121	Exterior	3' - 6"	7' - 0"	FG-AL	2	PT-4	7/A8.22	6/A8.22	5/A8.22	3.0	PANIC HARDWARE W/ DELAYED EGRESS, AUTO OPERATOR	CARD READER ACCESS, LOCKDOWN, ALARM
122	Interior	3' - 0"	7' - 0"	FG-WD		PT-1	2/A9.21	2/A9.21	-	10.0		CARD READER ACCESS
123A	Interior	3' - 0"	7' - 0"	F-WD		PT-1	2/A9.21	2/A9.21	11/A9.21	14.0	PRIVACY LATCH	
123B	Interior	3' - 0"	7' - 0"	F-WD		PT-1	2/A9.21	2/A9.21	11/A9.21	16.0	AUTO OPERATOR	
124	Interior	3' - 0"	7' - 0"	F-WD		PT-1	2/A9.21	2/A9.21	11/A9.21	14.0	PRIVACY LATCH	
125	Interior	3' - 0"	7' - 0"	F-WD		PT-1	2/A9.21	2/A9.21	9/A9.21	11.0		CARD READER ACCESS
126	Interior	3' - 0"	7' - 0"	N-WD		PT-1	2/A9.21	2/A9.21	10/A9.21	10.0		CARD READER ACCESS
127	Interior	3' - 0"	7' - 0"	N-WD		PT-1	2/A9.21	2/A9.21	10/A9.21	10.0		CARD READER ACCESS
128	Interior	3' - 0"	7' - 0"	N-WD		PT-1	2/A9.21	2/A9.21	10/A9.21	10.0		CARD READER ACCESS
129	Interior	4' - 0"	7' - 0"	F-WD		PT-1	2/A9.21	2/A9.21	-	12.0		CARD READER ACCESS
130	Exterior	6' - 0"	7' - 0"	F-HM2		PT-4	2/A8.23	2/A8.23	1/A8.23	4.0	PANIC HARDWARE	CARD READER ACCESS
131	Exterior	3' - 0"	7' - 0"	F-HM		PT-4	2/A8.23	2/A8.23	1/A8.23	7.0		CARD READER ACCESS
132	Exterior	3' - 0"	7' - 0"	F-HM		PT-4	2/A8.23	2/A8.23	1/A8.23	7.0		CARD READER ACCESS
133A	Exterior	4' - 0"	7' - 0"	L-HM		PT-4	2/A8.23	2/A8.23	1/A8.23	7.0	4SF FREE AREA LOUVER	CARD READER ACCESS
133B	Exterior	4' - 0"	7' - 0"	L-HM		PT-4	2/A8.23	2/A8.23	1/A8.23	7.0	4SF FREE AREA LOUVER	CARD READER ACCESS
134	Interior	3' - 2"	7' - 0"	FG-WD	2	PT-1	5/A9.21	5/A9.21, 12/A9.21	10/A9.21	10.0		CARD READER ACCESS
135	Exterior	3' - 6"	7' - 0"	FG-AL	2	PT-4	7/A8.21	6/A8.21	5/A8.21	2.0	HOLD OPEN, WIN-2	CARD READER ACCESS, LOCKDOWN
135A	Interior	3' - 0"	7' - 0"	FG-WD		PT-2	2/A9.21	2/A9.21	-	10.0	WIN-2	CARD READER ACCESS
136A	Interior	3' - 0"	7' - 0"	F-WD		PT-1	2/A9.21	2/A9.21	-	13.0		
136B	Interior	3' - 0"	7' - 0"	F-WD		PT-1	2/A9.21	2/A9.21	-	13.0		
138	Interior	3' - 0"	7' - 0"	FG-WD		PT-2	2/A9.21	2/A9.21	10/A9.21	10.0	WIN-2	CARD READER ACCESS
139	Exterior	3' - 6"	7' - 0"	FG-AL	2	PT-4	7/A8.21	6/A8.21	5/A8.21	2.0	HOLD OPEN, WIN-2	CARD READER ACCESS, LOCKDOWN
139A	Interior	3' - 0"	7' - 0"	FG-WD		PT-2	2/A9.21	2/A9.21	-	10.0	WIN-2	CARD READER ACCESS
140	Exterior	3' - 0"	7' - 0"	FG-AL	2	PT-4	7/A8.21	6/A8.21	5/A8.21	1.0	PANIC HARDWARE W/ DELAYED EGRESS	CARD READER ACCESS, LOCKDOWN, ALARM
G001.A	Exterior	3' - 6"	3' - 6"	GT-EX		PT-4	A/L2.2	A/L2.2	A/L2.2	6.0	PANIC HARDWARE	
G001.B	Exterior	3' - 6"	3' - 6"	GT-EX		PT-4	A/L2.2	A/L2.2	A/L2.2	6.0	PANIC HARDWARE	
G002	Exterior	3' - 1"	5' - 0"	GT-EX		PT-4	D/L2.2	D/L2.2	D/L2.2	6.1	PANIC HARDWARE	CARD READER ACCESS, ALARM, KNOX BOX ACCESS
G003	Exterior	3' - 1"	5' - 0"	GT-EX		PT-4	D/L2.2	D/L2.2	D/L2.2	6.0	SEE B/L2.3 FOR HEIGHT	ALARM, KNOX BOX ACCESS
G004	Exterior	6' - 6"	3' - 6"	GT-EX18		PT-4	F/L2.3	F/L2.3	F/L2.3	5.0	PANIC HARDWARE	
G005.A	Exterior	6' - 2"	5' - 0"	GT-EX2		PT-4	D/L2.3	D/L2.3	D/L2.3	5.1	PANIC HARDWARE	CARD READER ACCESS, KNOX BOX ACCESS
G005.B	Exterior	3' - 1"	5' - 0"	GT-EX		PT-4	E/L2.2	E/L2.2	E/L2.2	6.0	PANIC HARDWARE	
G006	Exterior	6' - 6"	3' - 6"	GT-EX18		PT-4	F/L2.3	F/L2.3	F/L2.3	5.0	PANIC HARDWARE	
G007	Exterior	3' - 1"	5' - 0"	GT-EX		PT-4	E/L2.2	E/L2.2	E/L2.2	6.0	PANIC HARDWARE	ALARM, KNOX BOX ACCESS
G008	Exterior	3' - 1"	5' - 0"	GT-EX		PT-4	E/L2.2	E/L2.2	E/L2.2	6.0	PANIC HARDWARE	KNOX BOX ACCESS
G009	Exterior	3' - 1"	5' - 0"	GT-EX		PT-4	D/L2.2	D/L2.2	D/L2.2	6.1	PANIC HARDWARE	CARD READER ACCESS
G010	Exterior	9' - 0"	6' - 0"	GT-EX2		PT-4	K/L2.1	K/L2.1	K/L2.1	18.0	TRASH ENCLOSURE	
G100	Interior	4' - 0"	2' - 10"	GT-WD			19/A9.21	19/A9.21		8.0	PANIC HARDWARE	
G107	Interior	3' - 0"	2' - 8"	GT-WD				17/A9.21		17.0		
G109A	Interior	3' - 0"	2' - 8"	GT-PH				12/A9.21		17.0		
G109B	Interior	3' - 0"	2' - 8"	GT-PH				12/A9.21		17.0		
G109C	Interior	3' - 0"	2' - 8"	GT-PH				12/A9.21		17.0		
G111	Interior	3' - 0"	2' - 8"	GT-WD				17/A9.21		17.0		
G115	Interior	3' - 0"	2' - 8"	GT-WD				17/A9.21		17.0		
G117A	Interior	3' - 0"	2' - 8"	GT-PH				12/A9.21		17.0		
G117B	Interior	3' - 0"	2' - 8"	GT-PH				12/A9.21		17.0		
G117C	Interior	3' - 0"	2' - 8"	GT-PH				12/A9.21		17.0		
G119	Interior	3' - 0"	2' - 8"	GT-WD				17/A9.21		17.0		
G120B	Interior	3' - 0"	2' - 8"	GT-WD				17/A9.21		17.0		
G135A	Interior	3' - 0"	2' - 8"	GT-WD				17/A9.21		17.0		
G135B	Interior	3' - 0"	2' - 8"	GT-WD				17/A9.21	10/A9.21	17.0		
G135C	Interior	3' - 0"	2' - 8"	GT-WD				17/A9.21		17.0		
G137A	Interior	3' - 0"	2' - 8"	GT-WD				17/A9.21		17.0		
G137B	Interior	3' - 0"	2' - 8"	GT-WD				17/A9.21		17.0		
G139A	Interior	3' - 0"	2' - 8"	GT-WD				17/A9.21		17.0		
G139B	Interior	3' - 0"	2' - 8"	GT-WD				17/A9.21	10/A9.21	17.0		
G139C	Interior	3' - 0"	2' - 8"	GT-WD				17/A9.21		17.0		

Grand total: 83

GENERAL DOOR NOTES

1. LATCHING AND LOCKING DOORS THAT ARE HAND ACTIVATED AND WHICH ARE IN A PATH OF PANIC-BARS, PUSH-PULL ACTIVATING BARS, OR OTHER HARDWARE DESIGNED TO PROVIDE PASSAGE WITHOUT REQUIRING THE ABILITY TO GRASP THE OPENING HARDWARE. LOCKED EXIT DOORS SHALL OPERATE AS ABOVE IN EGRESS DIRECTION.
2. HAND-ACTIVATED DOOR OPENING HARDWARE SHALL BE 37" AFF.
3. MAXIMUM EFFORT TO OPERATE DOORS SHALL NOT EXCEED 5 POUNDS, SUCH PULL OR PUSH EFFORT BEING APPLIED AT RIGHT ANGLES TO HINGED DOORS AND AT THE CENTER PLANE OF SLIDING OR FOLDING DOORS. COMPENSATING DEVICES OR AUTOMATIC DOOR OPERATORS MAY BE UTILIZED TO MEET THE ABOVE STANDARDS. WHEN FIRE DOORS ARE REQUIRED, THE MAXIMUM EFFORT TO OPERATE THE DOOR MAY BE INCREASED TO THE MAXIMUM ALLOWABLE BY THE APPROPRIATE FLS ADMINISTRATIVE AUTHORITY, NOT TO EXCEED 15 POUNDS.
4. VERIFY AND COORDINATE PARTITION TYPES AND DOOR FRAME THROAT DIMENSIONS.
5. VISIBLE CLEARANCES BETWEEN DOOR FRAME AND WALL SHALL BE CAULKED FOR TIGHT FIT.
6. SEE PLANS FOR DOOR SWING AND HINGING.
7. PAINTED ALUMINUM DOORS AND FRAMES SHALL BE PER SPECIFICATIONS SECTION 08 44 13.
8. WOOD TO BE CLEAR FINISHED, UON.
9. ALUMINUM & HOLLOW METAL TO BE PAINTED, UON.
10. FRAME TYPE AT DOORS TO BE TYPE 1, UON., FRAME TYPE AT GATES TO BE TYPE 3, UON.
11. GL12T TYPE GLAZING AT ALL INTERIOR DOORS, TYP. UON., FOR GLAZING AT EXTERIOR DOORS SEE A3 SERIES.
12. ALL ACCESS READERS TO BE HARDWIRED.
13. SEE SHEET A2.21 FOR DOOR SIGNAGE LOCATIONS.
14. DOORS AND GATES WITH DELAYED EGRESS SHALL BE SET FOR 5 SECONDS, TYP., AND SHALL HAVE DELAYED EGRESS SIGN PER 15/G0.11.
15. INSTALL WINDOW SHADES, WIN-2, ON INTERIOR SIDE OF DOOR, WO.
16. LOCKDOWN DENOTES DOORS AND GATES THAT SHALL BE INTEGRATED INTO THE BUILDING'S LOCKDOWN SYSTEM.
17. PROVIDE ACCESSIBLE DOOR OR GATE LEAF WIDTH, MINIMUM 36" WIDE AND CAPABLE OF MAXIMUM 5LB. FORCE OPERATION PER 11B-404.2.9. (NOTE THAT THE MAXIMUM ALLOWED WIDTH FOR A SWINGING EGRESS DOOR OR GATE IS 48" NOMINAL PER CBC 1010.1.1.)
18. PROVIDE HARDWARE WITH 5LB. MAXIMUM UNLATCHING FORCE PER 11B-404.2.7 AND 11B-309.4. THIS REQUIREMENT APPLIES TO ALL DOOR HARDWARE, INCLUDING EXIT DEVICES.
19. UNLATCHING OF ANY DOOR SHALL NOT REQUIRE MORE THAN ONE OPERATION. SEE CBC 1010.1.9.6 FOR EXCEPTIONS.
20. STOREROOM OR SIMILAR HARDWARE FUNCTION TYPES REQUIRE TWO-HAND OPERATION AND DO NOT COMPLY WITH 11B-404.2.7. (NOTE THAT ACCESSIBLE HARDWARE IS NOT REQUIRED TO MECHANICAL, ELECTRICAL OR SIMILAR ROOMS AS EXCEPTED IN 11B-203.5.)
21. ON THE PUSH-SIDE OF THE DOOR, PROVIDE SMOOTH SURFACE WITHIN 10" OF FINISH FLOOR OR GROUND, FOR FULL WIDTH OF DOOR PER 11B-404.2.10.
22. HARDWARE SHALL COMPLY WITH SFM STANDARD 12-10-3, SECTION 12-10-302:-CROSS BARS FOR EXIT DEVICES SHALL EXTEND ACROSS NOT LESS THAN HALF OF THE DOOR OR GATE WIDTH.-ENDS OF CROSS BARS SHALL BE CURVED, GUARDED OR OTHERWISE DESIGNED TO PREVENT CATCHING ON CLOTHING DURING EGRESS.
23. DOOR CLOSERS AND GATE CLOSERS TO COMPLY WITH 11B-404.2.8.1. DOOR CLOSERS AND GATE CLOSERS SHALL BE ADJUSTED SO THAT FROM AN OPEN POSITION OF 90 DEGREES, THE TIME REQUIRED TO MOVE THE DOOR TO A POSITION OF 12 DEGREES FROM THE LATCH IS 5 SECONDS MINIMUM.
24. SPRING HINGES TO COMPLY WITH 11B-404.2.8.2. DOOR AND GATE SPRING HINGES SHALL BE ADJUSTED SO THAT FROM THE OPEN POSITION OF 70 DEGREES, THE DOOR OR GATE SHALL MOVE TO THE CLOSED POSITION IN 1.5 SECONDS MINIMUM.

DOOR SCHEDULE ABBREVIATIONS

AL	ALUMINUM (PAINTED, U.O.N.)	HM	HOLLOW METAL (PAINTED, U.O.N.)	REQ'D	REQUIRED
CLR	CLEAR FINISH	MAT	MATERIAL	SS	STAINLESS STEEL
FIN	FINISH	PH	PHENOLIC	WD	WOOD (CLEAR FINISH, U.O.N.)
GL	GLAZING	PT	PAINTED		
		PT-#	PAINT COLOR (SEE SPEC SECTION 09 00 00 FOR DETAILS)		

DOOR TYPES

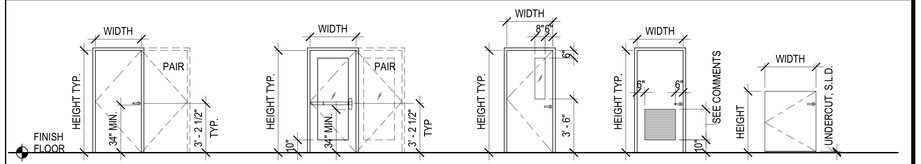

TYPE F-WD (SOLID CORE FLUSH WOOD)
TYPE F-WD2 (PAIR)
TYPE F-HM (FLUSH HOLLOW METAL)
TYPE F-HM2 (PAIR)

TYPE FG-WD (FULLY-GLAZED WOOD)
TYPE FG-WD2 (PAIR)
TYPE FG-AL (FULLY-GLAZED ALUMINUM)

TYPE N-WD (NARROW-LITE WOOD)

TYPE L-HM (LOUVERED HOLLOW METAL)

TYPE GT-WD ((INTERIOR WOOD GATE)
TYPE GT-PH (INTERIOR PHENOLIC GATE)
TYPE GT-EX (EXTERIOR GATE)
TYPE GT-EX2 (PAIR)

FRAME TYPES SEE ENLARGED FLOOR PLANS + ELEVATIONS FOR SIZE & DIMENSIONS

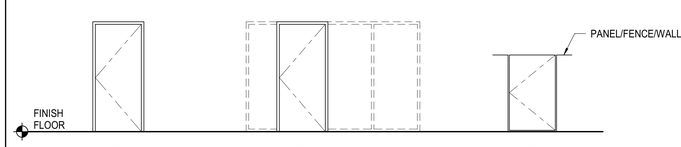

TYPE 1 TYPE 2 TYPE 3

DOOR DETAILS

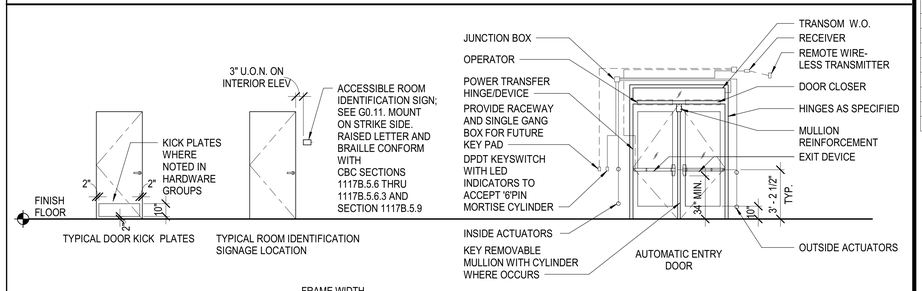

TYP DOOR KICK PLATES
TYPICAL ROOM IDENTIFICATION SIGNAGE LOCATION
TYP DOOR LOCATION
DOOR FRAME ANCHORING

C:\Users\s.sanchez\Documents\20020-A-CSU STANISLAUS CDC- CENTRAL_ehdd-sjling.rvt

Division of the State Architect

APPROVED
DIV. OF THE STATE ARCHITECT
APP: 02-119316 INC:
REVIEWED FOR
SS☐ FLS☐ ACS☑
DATE: 03/24/2022

Office of the State Fire Marshal

OFFICE OF THE STATE FIRE MARSHAL
APPROVED FIRE AND PANIC ONLY
03/14/22
21-0498
Approval of this plan does not authorize or approve any omission or deviation from applicable requirements. Final approval is subject to field inspection. One set of approved plans shall be available on the project site at all times.

CSUS CHILD DEVELOPMENT CENTER

CALIFORNIA STATE UNIVERSITY, STANISLAUS
ONE UNIVERSITY CIRCLE
TURLOCK, CA 95382

ehdd.

PIER 1, BAY 2
THE EMBARCADERO
SAN FRANCISCO, CA 94111

INFO@EHDD.COM
+1 415-285-9193

Consultant

Stamp

Printing	Date
95% CONSTRUCTION DOCUMENTS	06.25.2021
PERMIT SET	08.16.2021
PERMIT SET - DSA V2	12.15.2021
PERMIT SET - SFM	12.21.2021

Revisions and Description	Date

Scale
1/4" = 1'-0"

Drawn by
Author

EHDD Job Number
20020

Sheet Title
DOOR TYPES AND SCHEDULES

Sheet Number
A0.31 V3

12/10/2021 9:25:45 AM

1 A2.01 FLOOR PLAN
SCALE: 1/8" = 1'-0"

C:\Users\ jquinones\OneDrive - EHDD\Documents\20020-A-CSU STANISLAUS CDC- CENTRAL_I_quinones.rvt

FLOOR PLAN SHEET NOTES

1. FOR GENERAL NOTES APPLICABLE TO ALL DRAWINGS REFER TO THE "PROJECT GENERAL NOTES".
2. SEE FURNITURE PLAN FOR OWNER FURNISHED AND INISTALLED EQUIPMENT AND APPLIANCES.
3. SEE A0.11 FOR ADDITIONAL GATE TAGS.
4. SEE A3.X SERIES FOR EXTERIOR R.O. DIMENSIONS.
5. SEE FOOD SERVICE DRAWINGS, QF SERIES, FOR STAFF KITCHEN 120 & PANTRY 120A FIXTURES AND EQUIPMENT.

FLOOR PLAN LEGEND

- NEW PARTITION AND DOOR
- LOW WOOD GATE WITH SWING DOOR AND CHILD LATCH
- MILLWORK IN PLAN VIEW
- Room Name / Numb — ROOM NAME AND NUMBER
- D3E2 — WALL TYPE
- 100 — DOOR / GATE TAG
- F.E. — FIRE EXTINGUISHER
- F.E.C. — FIRE EXTINGUISHER CABINET
- A.E.D. — AUTOMATED EXTERNAL DEFIBRILLATOR

Division of the State Architect

APPROVED
DIV. OF THE STATE ARCHITECT
APP: 02-119316 INC:
REVIEWED FOR
SS☐ FLS☐ ACS☑
DATE: 03/24/2022

Office of the State Fire Marshal

OFFICE OF THE STATE FIRE MARSHAL APPROVED FIRE AND PANIC ONLY
03/14/22
21-0498
Approval of this plan does not authorize or approve any omission or deviation from applicable regulations. Final approval is subject to field inspection. One set of approved plans shall be available on the project site at all times.

CSUS CHILD DEVELOPMENT CENTER

CALIFORNIA STATE UNIVERSITY, STANISLAUS
ONE UNIVERSITY CIRCLE
TURLOCK, CA 95382

ehdd.

PIER 1, BAY 2
THE EMBARCADERO
SAN FRANCISCO, CA 94111

INFO@EHDD.COM
+1 415-285-9193

Consultant

Stamp

LICENSED ARCHITECT
JENNIFER K. DEVER
No. C-27347
Ren. 5-31-23
STATE OF CALIFORNIA

Printing	Date
95% CONSTRUCTION DOCUMENTS	06.25.2021
PERMIT SET	08.16.2021
PERMIT SET - DSA V2	12.15.2021
PERMIT SET - SFM	12.21.2021

Revisions and Description	Date

Scale
1/8" = 1'-0"

Drawn by
Author

EHDD Job Number
20020

Sheet Title
FLOOR PLAN

Sheet Number
A2.01 V3

12/13/2021 12:33:03 PM

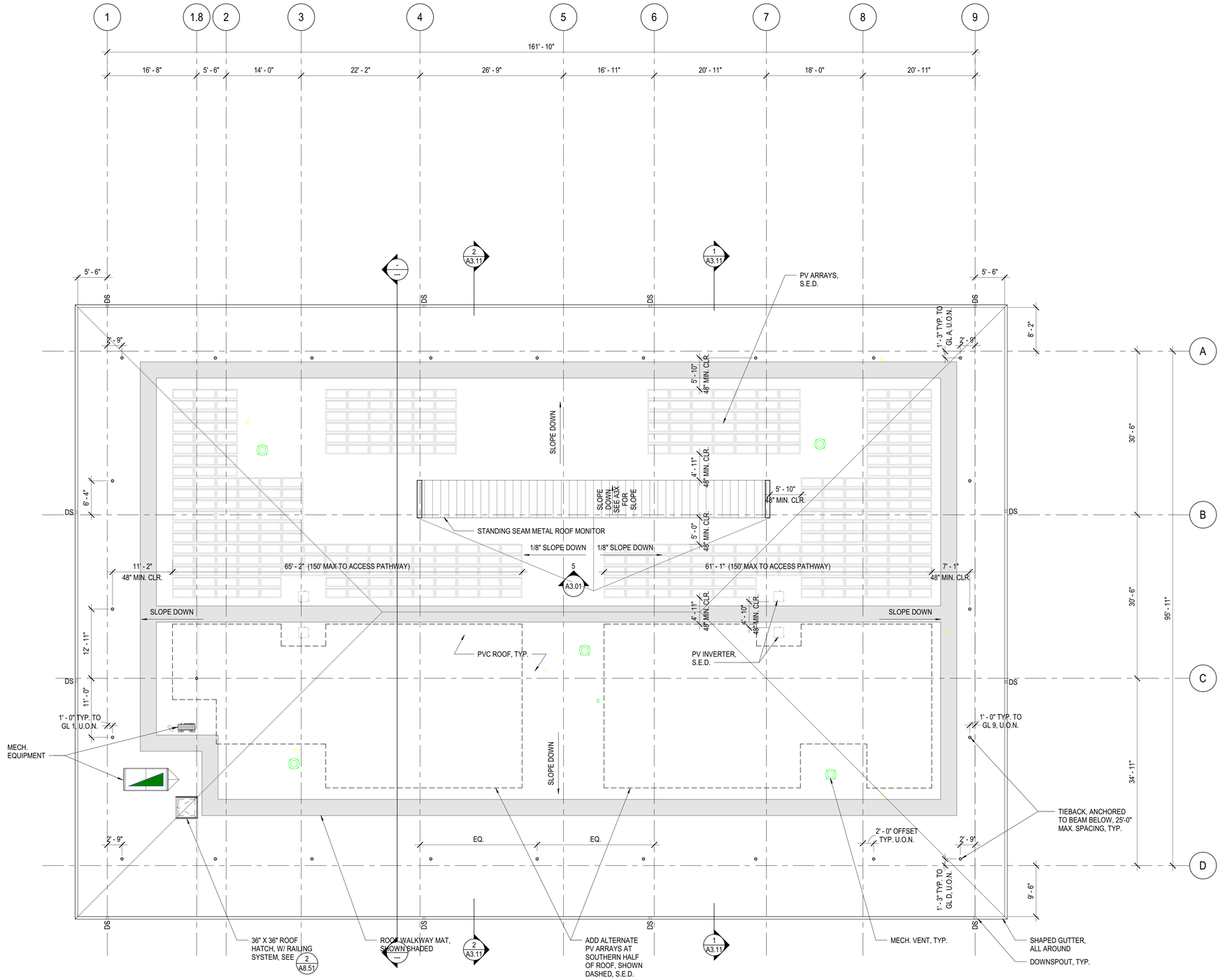

1 A2.02 ROOF PLAN
SCALE: 1/8" = 1'-0"

10.0° TO TRUE NORTH

8' 0' 8' 16'

ROOF PLAN SHEET NOTES

1. ROOF SLOPE TO BE 1/4" / FT, U.O.N.
2. SEE A8.51 FOR TYPICAL ROOF DETAILS
3. SEE ELECTRICAL DRAWINGS FOR PV SIZING, SCOPE AND ADDITIONAL INFO

ROOF PLAN LEGEND

○ DS	DOWNSPOUT
⊙	ROOF TIEBACK, SEE 10/A8.51 FOR WATERPROOFING, SEE S6.15 FOR ATTACHMENT DETAIL

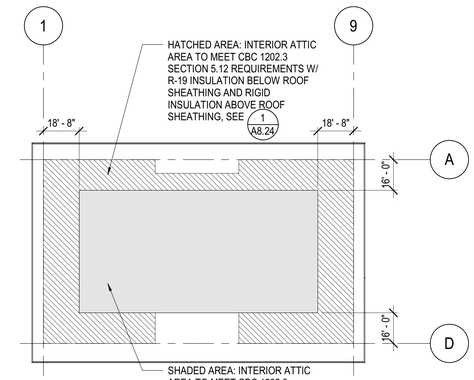

NOTES:
1) ATTIC TO MEET CBC 1202.3 REQUIREMENTS.
2) MONTHLY AVERAGE WINTER EXTERIOR TEMPERATURE IS ABOVE CODE MINIMUM OF 45F.

2 A2.02 ROOF PLAN - INSULATION DIAGRAM
NOT TO SCALE

Division of the State Architect
APPROVED
DIV. OF THE STATE ARCHITECT
APP: 02-119316 INC:
REVIEWED FOR
SS☐ FLS☐ ACS☑
DATE: 03/24/2022
-
Office of the State Fire Marshal
OFFICE OF THE STATE FIRE MARSHAL
APPROVED FIRE AND PANIC ONLY
03/14/22
21-0498
Approval of this plan does not authorize or approve any omission or deviation from applicable regulations. Final approval is subject to field inspection. One set of approved plans shall be available on the project site at all times.

CSUS CHILD DEVELOPMENT CENTER

CALIFORNIA STATE UNIVERSITY, STANISLAUS
ONE UNIVERSITY CIRCLE
TURLOCK, CA 95382

ehdd.

PIER 1, BAY 2
THE EMBARCADERO
SAN FRANCISCO, CA 94111

INFO@EHDD.COM
+1 415-285-9193

Consultant

Stamp

LICENSED ARCHITECT
JENNIFER K DEVLIN
No. C-27344
Ren. 5-31-23
STATE OF CALIFORNIA

Printing	Date
95% CONSTRUCTION DOCUMENTS	06.25.2021
PERMIT SET	08.16.2021
PERMIT SET - DSA V2	12.15.2021
PERMIT SET - SFM	12.21.2021

Revisions and Description	Date

Scale
As indicated

Drawn by
Author

EHDD Job Number
20020

Sheet Title
ROOF PLAN

Sheet Number
A2.02 V3

C:\Users\s.sanchez\Documents\20020-A-CSU STANISLAUS CDC- CENTRAL_ehdd-sjlng.rvt

12/13/2021 11:44:47 AM

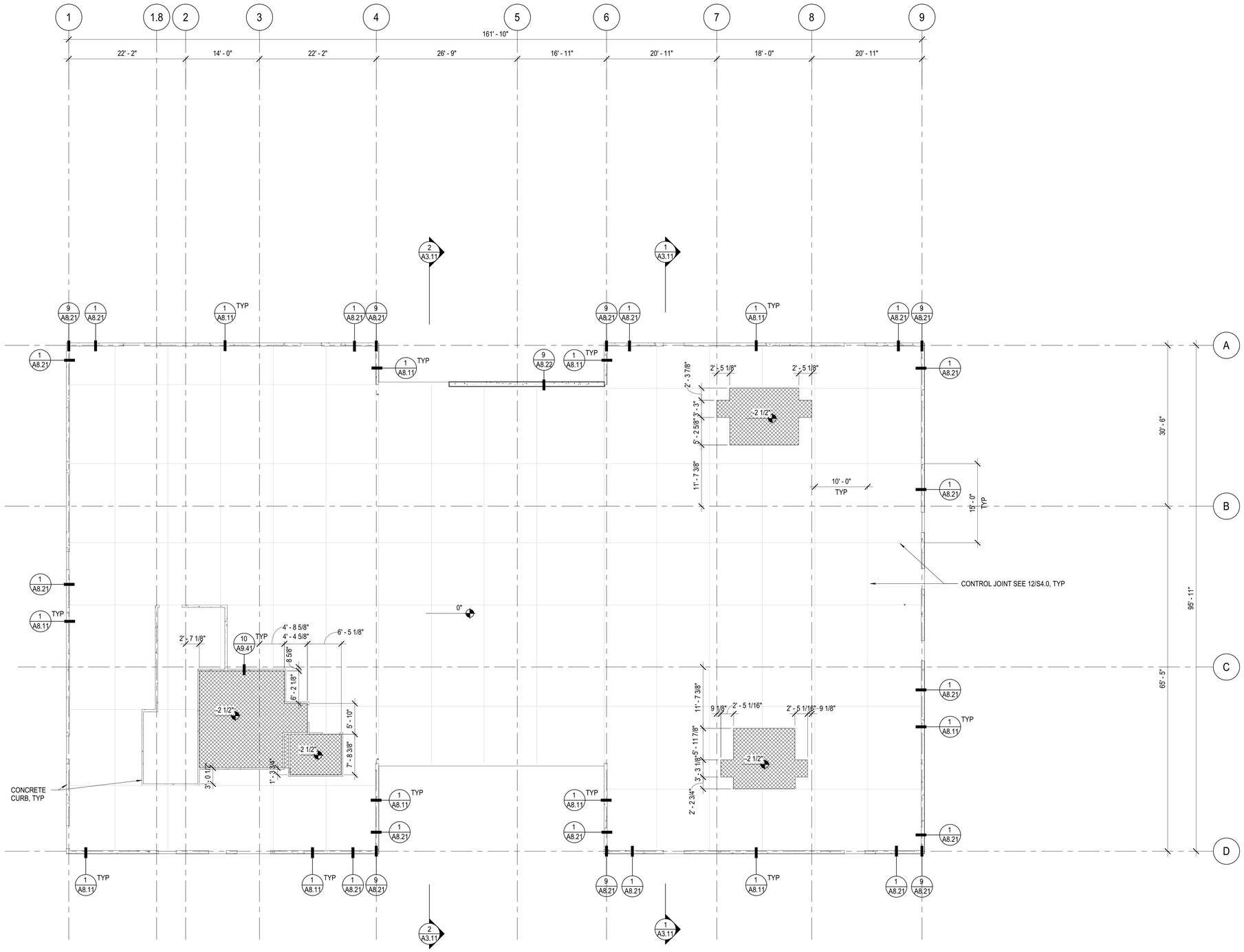

1 A2.11 SLAB PLAN
SCALE: 1/8" = 1'-0"

10.0° TO TRUE NORTH

8' 0' 8' 16'

SLAB PLAN GENERAL NOTES:

1. COORDINATE ALL DIMENSIONS WITH DETAILS.
2. SPOT ELEVATIONS SHOWN ARE RELATIVE TO FINISH FLOOR LEVEL 0,0.
3. SMD FOR ADDITIONAL MECH EQPT CURBS NOT SHOWN HERE.
4. SEE ELEVATIONS FOR EXTERIOR CURB EXTENTS @ FENESTRATION.
5. SEE A8.01 & SSD FOR TYPICAL FOUNDATION AND SLAB DETAILS.

SLAB PLAN LEGEND

- STRUCTURAL SLAB, SEE STRUCT. DWGS.
- RECESSED SLAB AREA, SEE STRUCTURAL DWGS.
- CONCRETE CURB
- SLAB DEPRESSION
- SLAB CONTROL JOINT, SEE 12/S4.0, TYPICAL DIMENSIONS SHOW MAX SPACING. SEE ALIGNMENTS WITH WALL AND CURBS FOR NON-TYPICAL SPACING

Division of the State Architect

APPROVED
DIV. OF THE STATE ARCHITECT
APP: 02-119316 INC:
REVIEWED FOR
SS☐ FLS☐ ACS☑
DATE: 03/24/2022

Office of the State Fire Marshal

OFFICE OF THE STATE FIRE MARSHAL
APPROVED FIRE AND PANIC ONLY
03/14/22
21-0498
Approval of this plan does not authorize or approve any omission or deviation from applicable regulations. Final approval is subject to field inspection. One set of approved plans shall be available on the project site at all times.

CSUS CHILD DEVELOPMENT CENTER

CALIFORNIA STATE UNIVERSITY, STANISLAUS
ONE UNIVERSITY CIRCLE
TURLOCK, CA 95382

ehdd.

PIER 1, BAY 2
THE EMBARCADERO
SAN FRANCISCO, CA 94111

INFO@EHDD.COM
+1 415-285-9193

Consultant

Stamp

LICENSED ARCHITECT
JENNIFER K DEVLIN
No. C-37347
Ren. 5-31-23
STATE OF CALIFORNIA

Printing	Date
95% CONSTRUCTION DOCUMENTS	06.25.2021
PERMIT SET	08.16.2021
PERMIT SET - DSA V2	12.15.2021
PERMIT SET - SFM	12.21.2021

Revisions and Description	Date

Scale
As indicated

Drawn by
Author

EHDD Job Number
20020

Sheet Title
SLAB PLAN

Sheet Number
A2.11 V3

C:\Users\ quinones\OneDrive - EHDD\Documents\20020-A-CSU STANISLAUS CDC- CENTRAL_ quinones.rvt

12/10/2021 9:25:49 AM

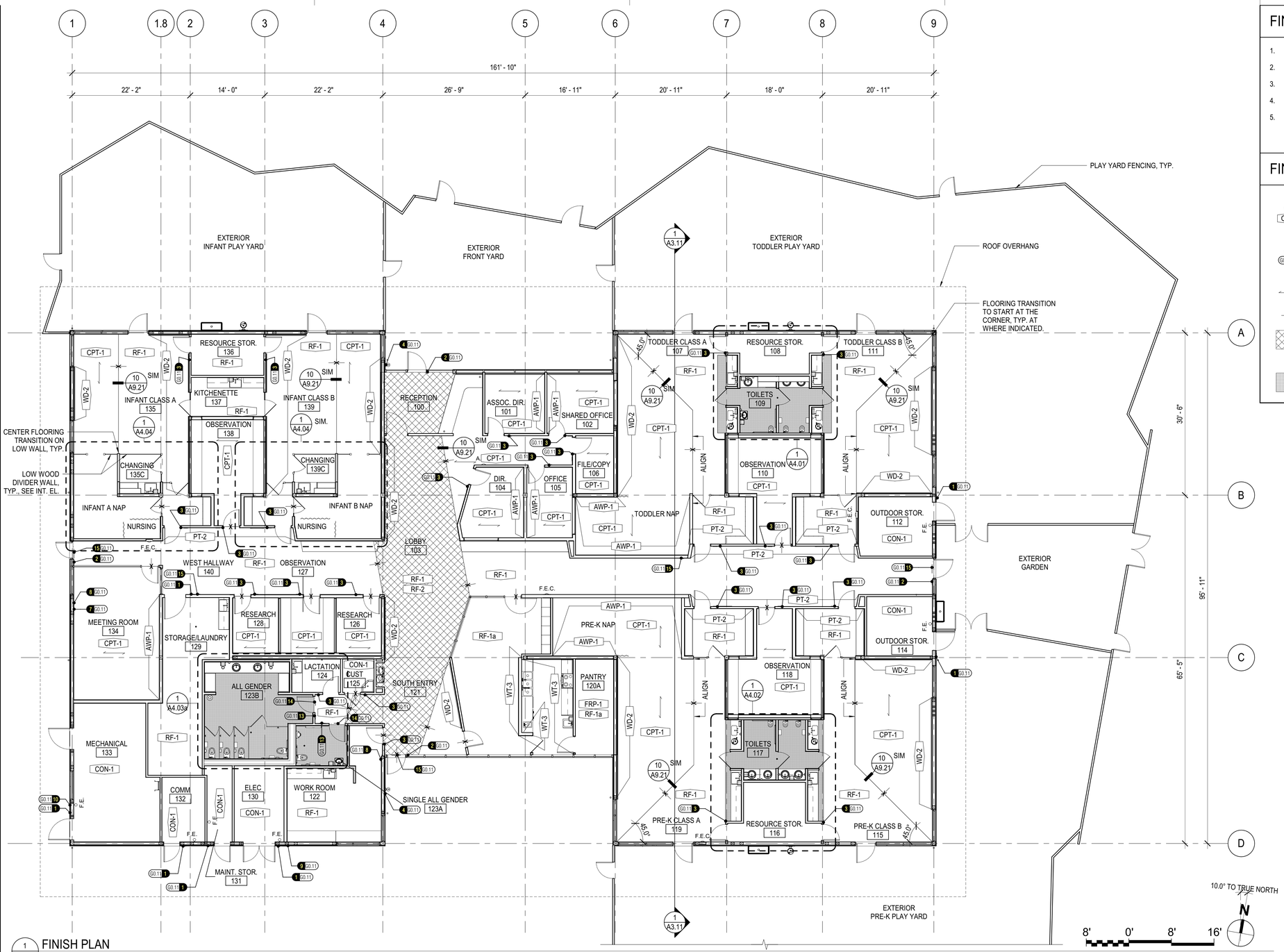

1 A2.21 FINISH PLAN
SCALE: 1/8" = 1'-0"

FINISH SCHEDULE

FINISH TAG	DESCRIPTION	MANUFACTURER	PRODUCT	COLOR	SIZE	INSTALLATION NOTES	LOCATION
AWP-1	ACOUSTIC WALL PANEL	FSORB	1/2" ACOUSTIC PANEL	GREY FS-160	48" X 96" X 1/2"	FULL WALL WHERE IT OCCURS.	
CON-1	SEALED CONCRETE	TBD	TBD	TBD			
CPT-1	CARPET TILE	SHAW CONTRACT	SHELTER TILE 5T240	MINT 38327	9" X 36"	INSTALL ASHLAR.	
FRP-1	FIBER REINFORCED PLASTIC	MARLITE	STANDARD FRP, SMOOTH	S 100G WHITE	FULL PANEL	EDGES AND CORNERS TO BE INSTALLED USING MFR STANDARD VINYL TRIM.	CUST. 125
FT-1	FLOOR TILE	DALTILE	KEYSTONES	DESERT GRAY SPECKLE D200	2" X 2"	INSTALL WITH COORDINATING COVE BASE AND TRIM PIECES AS REQ'D. GROUT COLOR #335 WINTER GRAY	AT SINGLE ALL GENDER 123A & ALL GENDER 123B
FT-2	FLOOR TILE	DALTILE	KEYSTONES STANDARD MOSIAC PATTERN DP2034	50% DESERT GRAY D014, 25% SPA D148, 25% MINT ICE D152	1" x 1" (12" x 12" SHEET)	GROUT COLOR #335 WINTER GRAY	TOILETS 109 & 117
PC-1	PRIVACY CURTAIN	MAHARAM	PROSE 511503	SCENIC 002	72" WIDTH	SURFACE MOUNTED CEILING TRACK.	
PL-1	PLASTIC LAMINATE	FORMICA	HDPL	FOSSIL 5349-58			
PT-1	GENERAL WHITE PAINT	BENJAMIN MOORE	PAINT	SOFT CHAMOIS OC-13		SEMI-GLOSS FINISH THROUGHOUT, UON.	TYPICAL WHITE PAINT THROUGHOUT.
PT-2	ACCENT PAINT	BENJAMIN MOORE	PAINT	CASTLE WALLS 1573		SEMI-GLOSS FINISH THROUGHOUT, UON.	ACCENT PAINT WHERE SPECIFIED.
PT- 4	METAL PAINT COLOR	AS SPECIFIED	PAINT	MATCH KAWNEER PERMAFLUOR "CHARCOAL"			ON METAL MATERIALS WHERE SPECIFIED.
PT- 5	ACRYLIC FINISH ON CEMENT PLASTER	AS SPECIFIED	CEMENT PLASTER	MATCH BENJAMIN MOORE 1598 SILVER LAKE			
PT- 6	ACRYLIC FINISH ON CEMENT PLASTER	AS SPECIFIED	CEMENT PLASTER	MATCH BENJAMIN MOORE 1616 STORMY SKY			
RB-1	RESILIENT BASE	MANNINGTON	TYPE TS	208 LIGHT GRAY	4" BASE.	TYPICAL BASE THROUGHOUT, UON. ROLLED GOODS. STRAIGHT BASE AT CARPET. COVE BASE AT RESILIENT FLOOR.	
RF-1	RESILIENT FLOORING	MONDO CONTRACT FLOORING	KAYAR RUBBER TILE	K054	24" X 24" X 3MM	BRICK INSTALL, UON.	
RF-1a	RESILIENT FLOORING	MONDO CONTRACT FLOORING	KAYAR RUBBER SHEET	K054	6'-2" X 32'-9" ROLL GOODS	SEAM WELD AND FLASH COVE PER MFR GUIDELINES, WHERE FLOORING OCCURS	
RF-2	RESILIENT FLOORING	MONDO CONTRACT FLOORING	KAYAR RUBBER TILE	K038	24" X 24" X 3MM	SEE CUSTOM PATTERN LAYOUT.	
SS-1	SOLID SURFACE	FORMICA	SIGNATURES	WHITE RENEW	1/2" THK		
SS-2	SOLID SURFACE	FORMICA	EVERFORM	SEA GLASS 505	1/2" THK		
WD-1	WOOD	N/A, MATCH ARCHITECTS SAMPLE	EUROPLY CORE / PREMIUM VENEER CORE	SLIP MATCHED, PLAIN SLICED MAPLE, TRANSPARENT FINISH	3/4" THK		
WD-2	PERFORATED PLYWOOD PANELS	N/A, MATCH ARCHITECTS SAMPLE	EUROPLY CORE / PREMIUM VENEER CORE	SLIP MATCHED, PLAIN SLICED MAPLE, TRANSPARENT FINISH	3/4" THK	PANEL SIZES PER ELEVATIONS	
WT-1	WALL TILE	DALTILE	COLOR WHEEL CLASSICS LINEAR	ARCTIC WHITE 0790 - MATTE	2" X 8"	GROUT COLOR #335 WINTER GRAY. PATTERN STACKED ON SHORT END. SEE RESTROOM ELEVATIONS.	AT SINGLE ALL GENDER 123A & ALL GENDER 123B
WT-2	WALL TILE	DALTILE	KEYSTONES STANDARD MOSIAC PATTERN DP2034	50% DESERT GRAY D014, 25% SPA D148, 25% MINT ICE D152	1" x 1" (12" x 12" SHEET)	GROUT COLOR #335 WINTER GRAY	TOILETS 109 & 117
WT-3	WALL TILE	DALTILE	COLOR WHEEL CLASSICS MOSAIC	ARCTIC WHITE 0790 - MATTE	1" X 3" LATTICE (12" x 12" SHEET)	GROUT COLOR #335 WINTER GRAY	AT STAFF KITCHEN 120

FINISH PLAN SHEET NOTES

1. USE PAINT PT-1 ON ALL GYPSUM SURFACES THROUGHOUT, TYP UON.
2. CONTINUE SPECIFIED FLOORING MATERIALS BENEATH CASEWORK, TYP UON.
3. PROVIDE WALL BASE RB-1 AT ALL GYPSUM BOARD WALLS, TYP UON.
4. SEE A5 SERIES INTERIOR ELEVATIONS FOR ADDITIONAL FINISH INFORMATION.
5. SEE DOOR SCHEDULE FOR THRESHOLDS AND FLOOR TRANSITIONS AT DOORS.

FINISH PLAN LEGEND

- FINISH TYPE
- CPT - 1 — FINISH TAG
- FINISH NUMBER
- SHEET NUMBER
- G0.11 1 — SIGNAGE TAG
- DETAIL NUMBER
- CARPET DIRECTION
- CHANGE IN FLOOR FINISH
- CUSTOM FLOOR PATTERN SEE DETAIL: 17 A9.41
- FLOOR TILE

Division of the State Architect

APPROVED
DIV. OF THE STATE ARCHITECT
APP: 02-119316 INC:
REVIEWED FOR
SS☐ FLS☐ ACS☑
DATE: 03/24/2022

Office of the State Fire Marshal

OFFICE OF THE STATE FIRE MARSHAL APPROVED FIRE AND PANIC ONLY
03/14/22
21-0498
Approval of this plan does not authorize or approve any omission or deviation from applicable regulations. Final approval is subject to field inspection. One set of approved plans shall be available on the project site at all times.

CSUS CHILD DEVELOPMENT CENTER

CALIFORNIA STATE UNIVERSITY, STANISLAUS
ONE UNIVERSITY CIRCLE
TURLOCK, CA 95382

ehdd.

PIER 1, BAY 2
THE EMBARCADERO
SAN FRANCISCO, CA 94111

INFO@EHDD.COM
+1 415-285-9193

Consultant

Stamp

LICENSED ARCHITECT
JENNIFER K DEVOE
Ren. 5-31-23
STATE OF CALIFORNIA

Printing	Date
95% CONSTRUCTION DOCUMENTS	06.25.2021
PERMIT SET	08.16.2021
PERMIT SET - DSA V2	12.15.2021
PERMIT SET - SFM	12.21.2021

Revisions and Description	Date

Scale
1/8" = 1'-0"

Drawn by
Author

EHDD Job Number
20020

Sheet Title
SIGNAGE PLAN & FINISH PLAN AND SCHEDULE

Sheet Number
A2.21 V3

C:\Users\ quinones\OneDrive - EHDD\Documents\20020-A-CSU STANISLAUS CDC- CENTRAL_ quinones.rvt

12/10/2021 9:25:51 AM

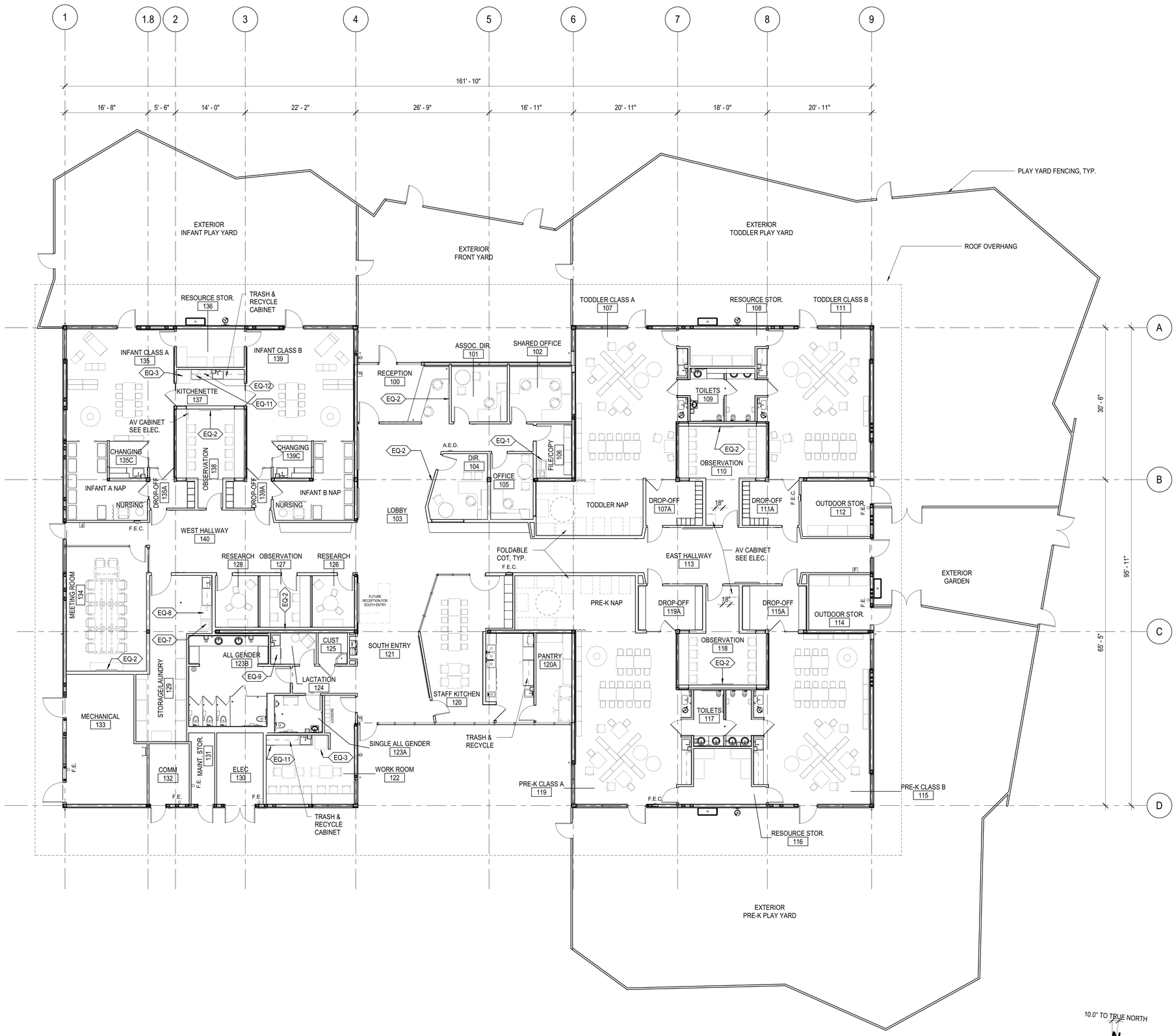

1 A2.41 FURNITURE PLAN
SCALE: 1/8" = 1'-0"

C:\Users\ljquinones\OneDrive - EHDD\Documents\20020-A-CSU STANISLAUS CDC- CENTRAL_ljquinones.rvt

FURNITURE PLAN SHEET NOTES

1. FURNITURE SHOWN FOR REFERENCE ONLY, N.I.C.
2. SEE LANDSCAPE DRAWINGS FOR PLAYARD AND EXTERIOR FURNITURE.
3. SEE FOOD SERVICE DRAWINGS, QF SERIES, FOR STAFF KITCHEN 120 & PANTRY 120A FIXTURES AND EQUIPMENT.

EQUIPMENT SCHEDULE

NOTE: APPLIANCES AND EQUIPMENT LISTED BELOW ARE OWNER FURNISHED AND INSTALLED. COORDINATE SPECS AND ALLOCATE CLEARANCES AS REQUIRED.

EQ-1	FLOOR STANDING COPY MACHINE
EQ-2	60" LCD SCREEN
EQ-3	REFRIGERATOR
EQ-4	NOT USED
EQ-5	NOT USED
EQ-6	NOT USED
EQ-7	WASHER
EQ-8	DRYER
EQ-9	ADA COMPLIANT MINI REFRIGERATOR
EQ-10	NOT USED
EQ-11	MICROWAVE
EQ-12	BOTTLE WARMER

Division of the State Architect

APPROVED
DIV. OF THE STATE ARCHITECT
APP: 02-119316 INC:
REVIEWED FOR
SS☐ FLS☐ ACS☑
DATE: 03/24/2022

Office of the State Fire Marshal

OFFICE OF THE STATE FIRE MARSHAL
APPROVED FIRE AND PANIC ONLY
03/14/22
21-0498
Approval of this plan does not authorize or approve any omission or deviation from applicable requirements. Final approval is subject to field inspection. One set of approved plans shall be available on the project site at all times.

CSUS CHILD DEVELOPMENT CENTER

CALIFORNIA STATE UNIVERSITY, STANISLAUS
ONE UNIVERSITY CIRCLE
TURLOCK, CA 95382

ehdd.

PIER 1, BAY 2
THE EMBARCADERO
SAN FRANCISCO, CA 94111

INFO@EHDD.COM
+1 415-285-9193

Consultant

Stamp

LICENSED ARCHITECT
JENNIFER K DEVLIN
No. C-17341
Ren. 5-31-23
STATE OF CALIFORNIA

Printing	Date
95% CONSTRUCTION DOCUMENTS	06.25.2021
PERMIT SET	08.16.2021
PERMIT SET - DSA V2	12.15.2021
PERMIT SET - SFM	12.21.2021

Revisions and Description	Date

Scale
1/8" = 1'-0"

Drawn by
Author

EHDD Job Number
20020

Sheet Title
FURNITURE & EQUIPMENT PLAN (FOR REFERENCE ONLY)

Sheet Number
A2.41 V3

12/13/2021 12:09:09 PM

C:\Users\s.sanchez\Documents\20020-A-CSU STANISLAUS CDC- CENTRAL_ehdd-sjling.rvt

ELEVATION NOTES & LEGEND

1. SEE A0.31 DOOR SCHEDULE FOR SIZES AND DETAIL REFERENCES.
2. SEE A2.21 FOR SIGNAGE REFERENCES.
3. SEE A8.11 FOR TYPICAL CEMENT PLASTER ASSEMBLY DETAILS

G# G#T GLASS TYPE, 'T' DENOTES TEMPERED GLASS, SEE SPEC SECTION 08 80 00

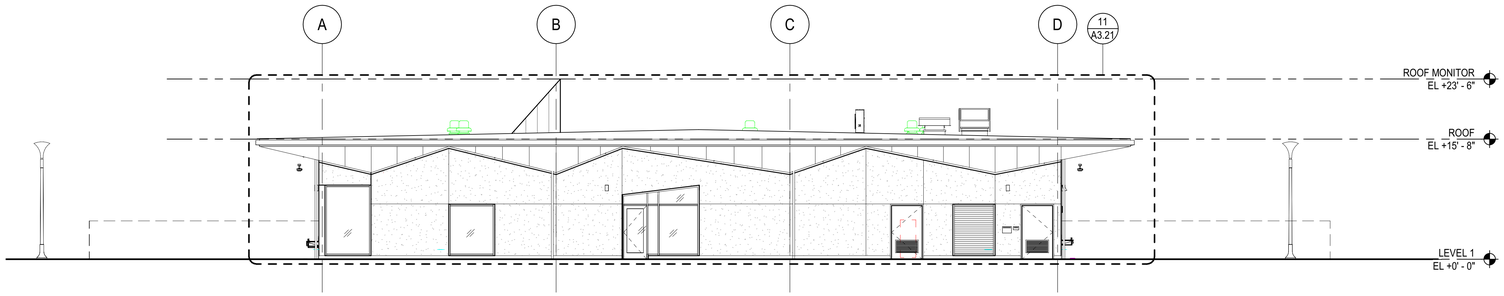

9 A3.01 WEST ELEVATION
SCALE: 1/8" = 1'-0"

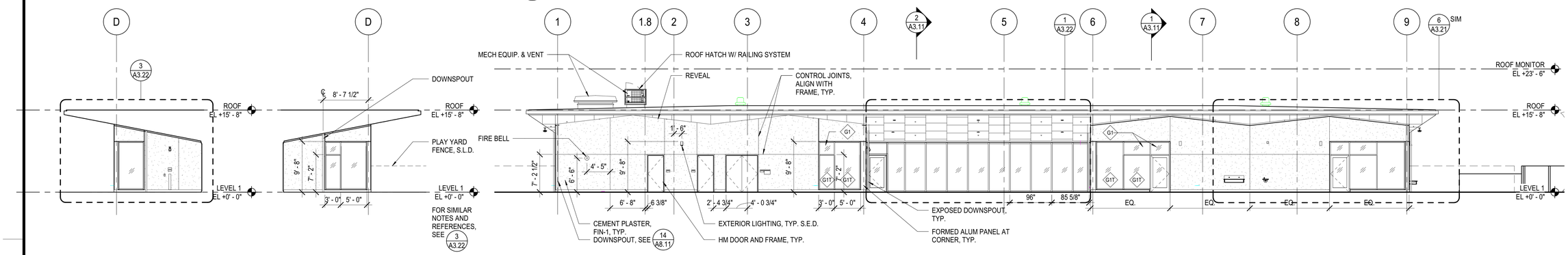

8 A3.01 SOUTH ENTRY - EAST ELEVATION
SCALE: 1/8" = 1'-0"

7 A3.01 SOUTH ENTRY - WEST ELEVATION
SCALE: 1/8" = 1'-0"

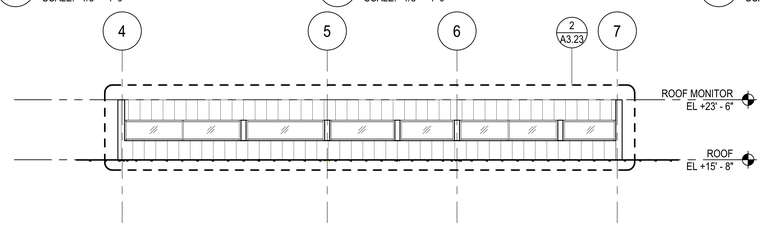

6 A3.01 SOUTH ELEVATION
SCALE: 1/8" = 1'-0"

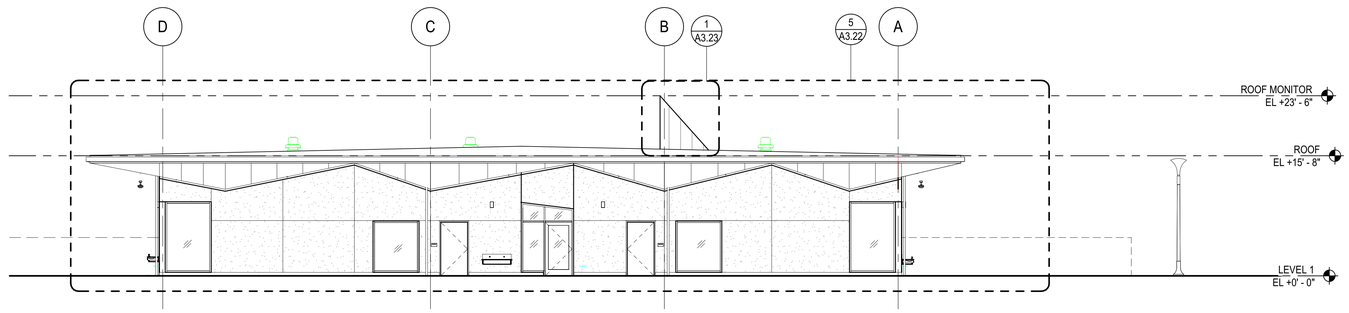

5 A3.01 ROOF MONITOR - SOUTH ELEVATION
SCALE: 1/8" = 1'-0"

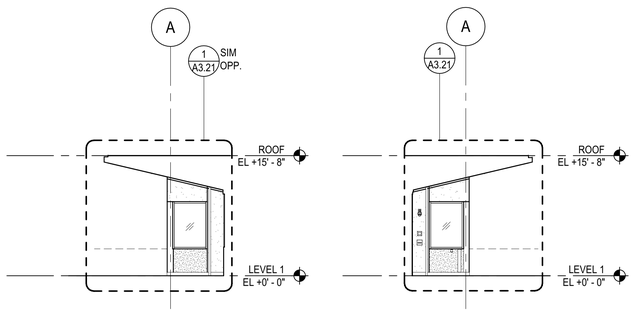

4 A3.01 EAST ELEVATION
SCALE: 1/8" = 1'-0"

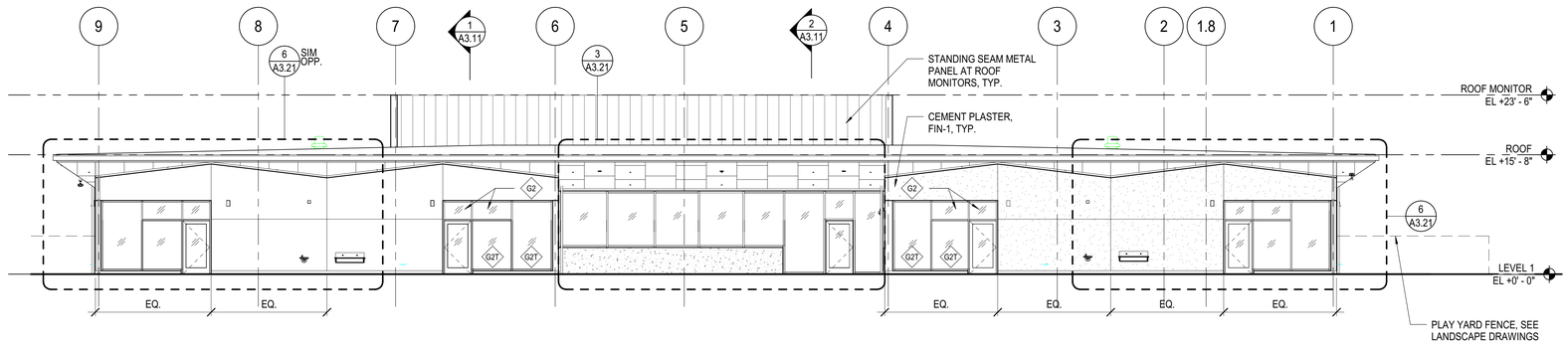

3 A3.01 NORTH ENTRY - WEST ELEVATION
SCALE: 1/8" = 1'-0"

2 A3.01 NORTH ENTRY - EAST ELEVATION
SCALE: 1/8" = 1'-0"

1 A3.01 NORTH ELEVATION
SCALE: 1/8" = 1'-0"

Division of the State Architect

APPROVED
DIV. OF THE STATE ARCHITECT
APP: 02-119316 INC:
REVIEWED FOR
SS☐ FLS☐ ACS☑
DATE: 03/24/2022

Office of the State Fire Marshal

OFFICE OF THE STATE FIRE MARSHAL
APPROVED FIRE AND PANIC ONLY
03/14/22
21-0498
Approval of this plan does not authorize or approve any omission or deviation from applicable regulations. Final approval is subject to field inspection. One set of approved plans shall be available on the project site at all times.

CSUS CHILD DEVELOPMENT CENTER

CALIFORNIA STATE UNIVERSITY, STANISLAUS
ONE UNIVERSITY CIRCLE
TURLOCK, CA 95382

ehdd

PIER 1, BAY 2
THE EMBARCADERO
SAN FRANCISCO, CA 94111

INFO@EHDD.COM
+1 415-285-9193

Consultant

Stamp

LICENSED ARCHITECT
JENNIFER K. DEVER
No. C-31543
Ren. 5-31-23
STATE OF CALIFORNIA

Printing	Date
95% CONSTRUCTION DOCUMENTS	06.25.2021
PERMIT SET	08.16.2021
PERMIT SET - DSA V2	12.15.2021
PERMIT SET - SFM	12.21.2021

Revisions and Description	Date

Scale
1/8" = 1'-0"

Drawn by
Author

EHDD Job Number
20020

Sheet Title
BUILDING ELEVATIONS

Sheet Number
A3.01 V3

12/14/2021 5:02:28 PM

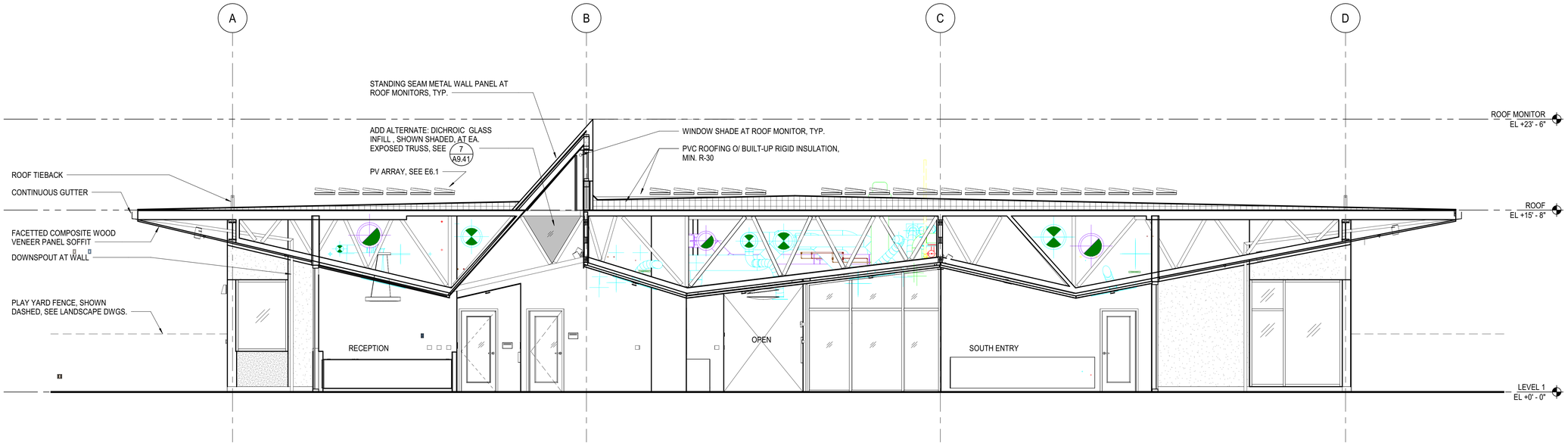

2 A3.11 TRANSVERSE SECTION THROUGH LOBBY

SCALE: 1/4" = 1'-0"

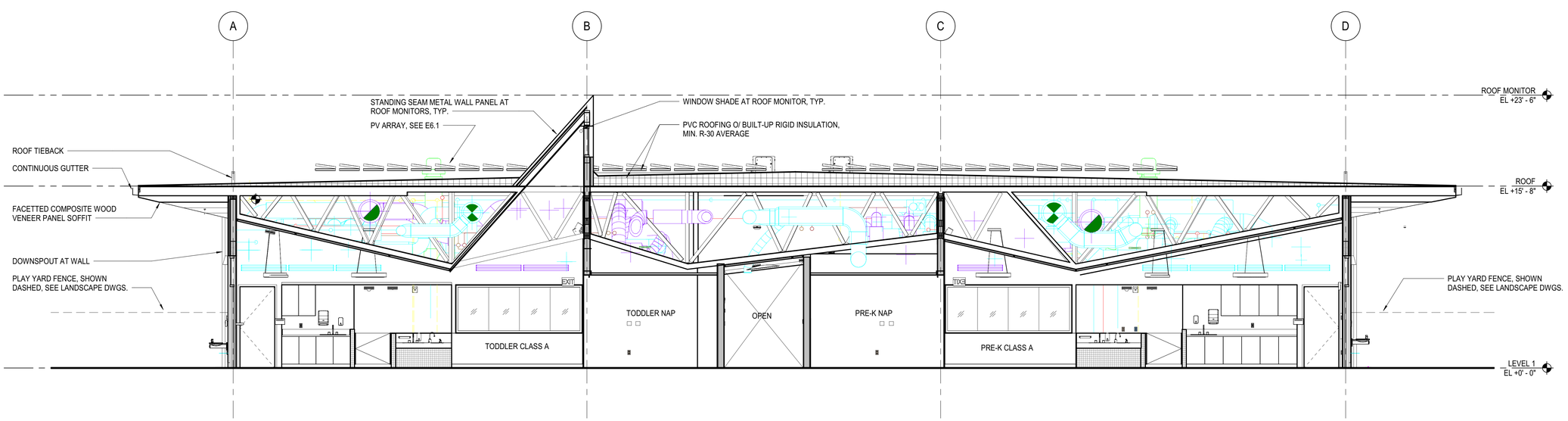

1 A3.11 TRANSVERSE SECTION THROUGH CLASSROOM

SCALE: 1/4" = 1'-0"

C:\Users\s.sanchez\Documents\20020-A-CSU STANISLAUS CDC- CENTRAL_ehdd-sjjing.rvt

Division of the State Architect

APPROVED
DIV. OF THE STATE ARCHITECT
APP: 02-119316 INC:
REVIEWED FOR
SS☐ FLS☐ ACS☑
DATE: 03/24/2022

Office of the State Fire Marshal

OFFICE OF THE STATE FIRE MARSHAL
APPROVED FIRE AND PANIC ONLY
03/14/22
21-0498
Approval of this plan does not authorize or approve any omission or deviation from applicable regulations. Final approval is subject to field inspection. One set of approved plans shall be available on the project site at all times.

CSUS CHILD DEVELOPMENT CENTER

CALIFORNIA STATE UNIVERSITY, STANISLAUS
ONE UNIVERSITY CIRCLE
TURLOCK, CA 95382

ehdd

PIER 1, BAY 2
THE EMBARCADERO
SAN FRANCISCO, CA 94111

INFO@EHDD.COM
+1 415-285-9193

Consultant

Stamp

Printing	Date
95% CONSTRUCTION DOCUMENTS	06.25.2021
PERMIT SET	08.16.2021
PERMIT SET - DSA V2	12.15.2021
PERMIT SET - SFM	12.21.2021

Revisions and Description	Date

Scale
1/4" = 1'-0"

Drawn by
Author

EHDD Job Number
20020

Sheet Title
BUILDING SECTIONS

Sheet Number
A3.11 V3

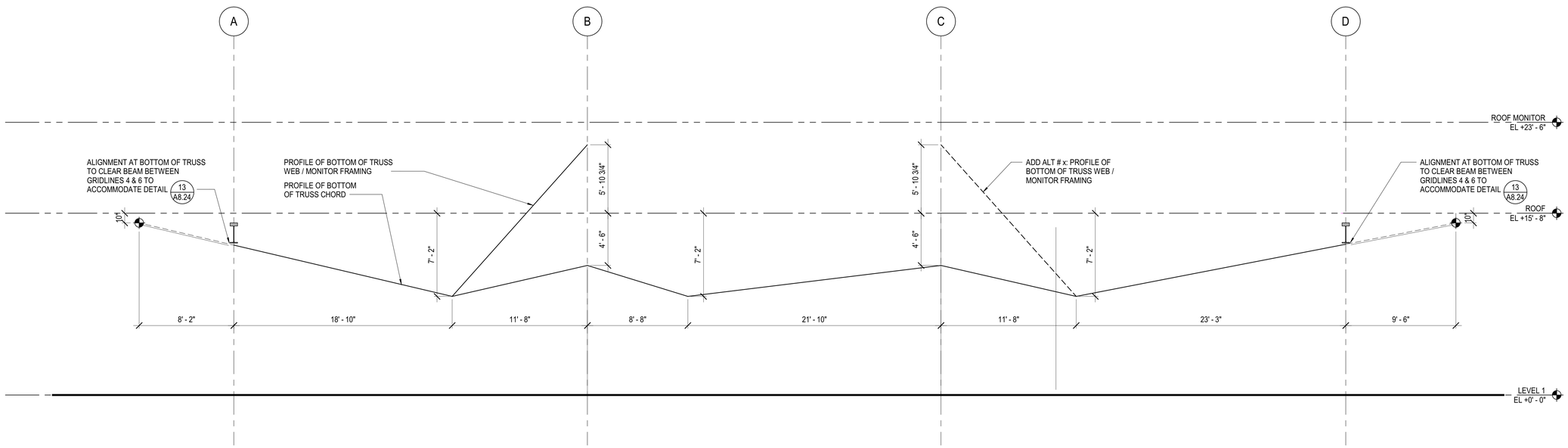

1 A3.12 TRUSS PROFILE DIAGRAM
SCALE: 1/4" = 1'-0"

Division of the State

APPROVED
DIV. OF THE STATE ARCHITECT
APP: 02-119316 INC:
REVIEWED FOR
SS ☐ FLS ☐ ACS ☑
DATE: 03/24/2022

Office of the State Fire Marshal

OFFICE OF THE STATE FIRE MARSHAL
APPROVED FIRE AND PANIC ONLY
03/14/22
21-0498
Approval of this plan does not authorize or approve any omission or deviation from applicable regulations. Final approval is subject to field inspection. One set of approved plans shall be available on the project site at all times.

CSUS CHILD DEVELOPMENT CENTER

CALIFORNIA STATE UNIVERSITY, STANISLAUS
ONE UNIVERSITY CIRCLE
TURLOCK, CA 95382

ehdd.

PIER 1, BAY 2
THE EMBARCADERO
SAN FRANCISCO, CA 94111

INFO@EHDD.COM
+1 415-285-9193

Consultant

Stamp

LICENSED ARCHITECT
JENNIFER K DEVLIN
No. C27334
Ren. 5-31-23
STATE OF CALIFORNIA

Printing	Date
95% CONSTRUCTION DOCUMENTS	06.25.2021
PERMIT SET	08.16.2021
PERMIT SET - DSA V2	12.15.2021
PERMIT SET - SFM	12.21.2021

Revisions and Description	Date

Scale
1/4" = 1'-0"

Drawn by
Author

EHDD Job Number
20020

Sheet Title
TRUSS PROFILE

Sheet Number
A3.12 V3

12/13/2021 12:09:12 PM

C:\Users\s.sanchez\Documents\20020-A-CSU STANISLAUS CDC- CENTRAL_ehdd-sijing.rvt

12/13/2021 12:09:15 PM

ELEVATION NOTES & LEGEND

1. SEE A0.31 DOOR SCHEDULE FOR SIZES AND DETAIL REFERENCES.
2. SEE A2.21 FOR SIGNAGE REFERENCES.
3. SEE A8.11 FOR TYPICAL CEMENT PLASTER ASSEMBLY DETAILS

G# G#T GLASS TYPE, 'T' DENOTES TEMPERED GLASS, SEE SPEC SECTION 08 80 00

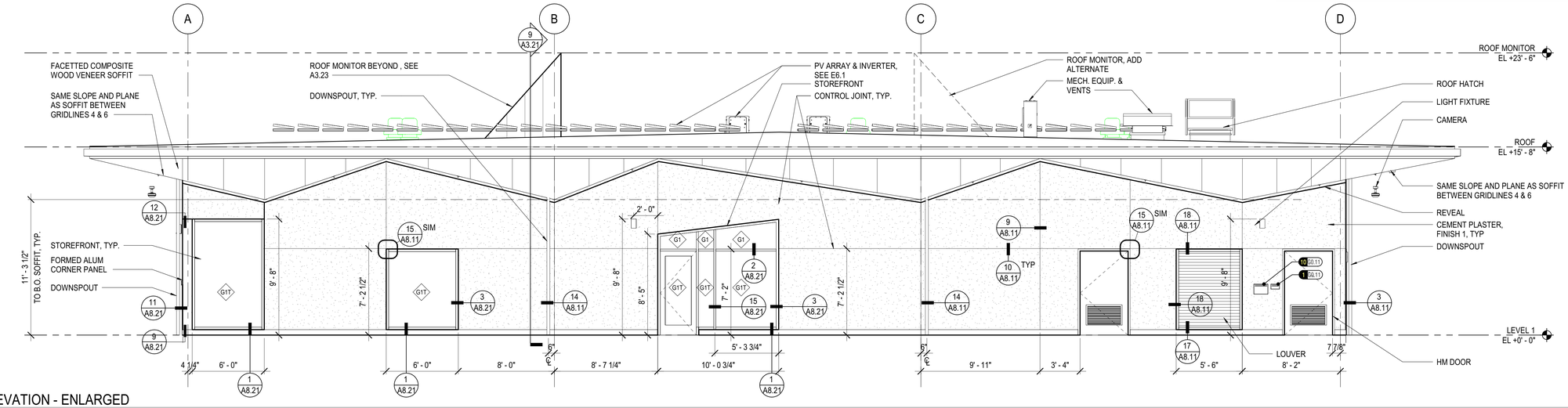

11 A3.21 WEST ELEVATION - ENLARGED
SCALE: 1/4" = 1'-0"

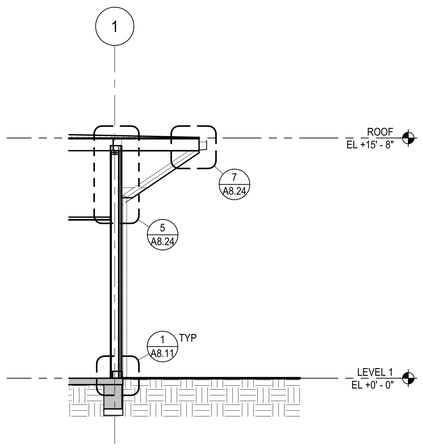

9 A3.21 WALL SECTION @ INFANT CLASSROOM - WEST ELEVATION
SCALE: 1/4" = 1'-0"

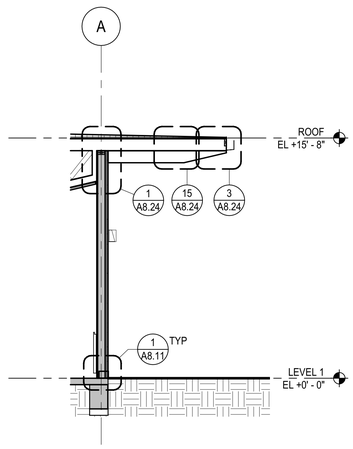

8 A3.21 WALL SECTION @ INFANT CLASSROOM
SCALE: 1/4" = 1'-0"

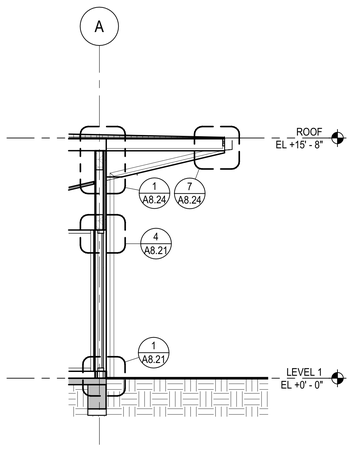

7 A3.21 WALL SECTION @ INFANT CLASSROOM1
SCALE: 1/4" = 1'-0"

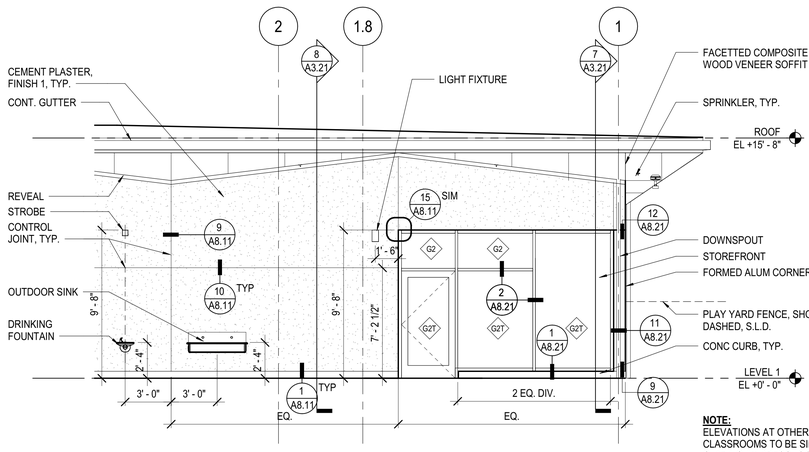

NOTE:
ELEVATIONS AT OTHER CLASSROOMS TO BE SIM./OPP., GLAZING AT PRESCHOOL CLASSROOMS TO BE REPLACED W/ TYPES G1 AND G1T.

6 A3.21 INFANT CLASSROOM - ENLARGED NORTH ELEVATION
SCALE: 1/4" = 1'-0"

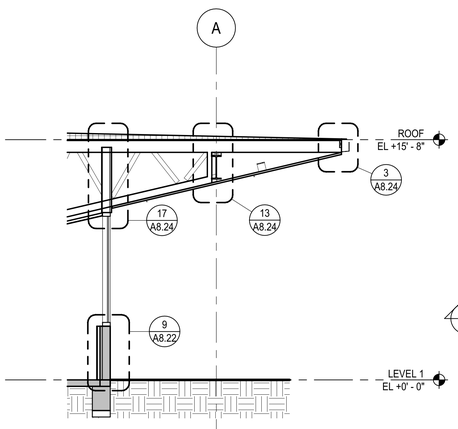

4 A3.21 WALL SECTION @ NORTH ENTRY
SCALE: 1/4" = 1'-0"

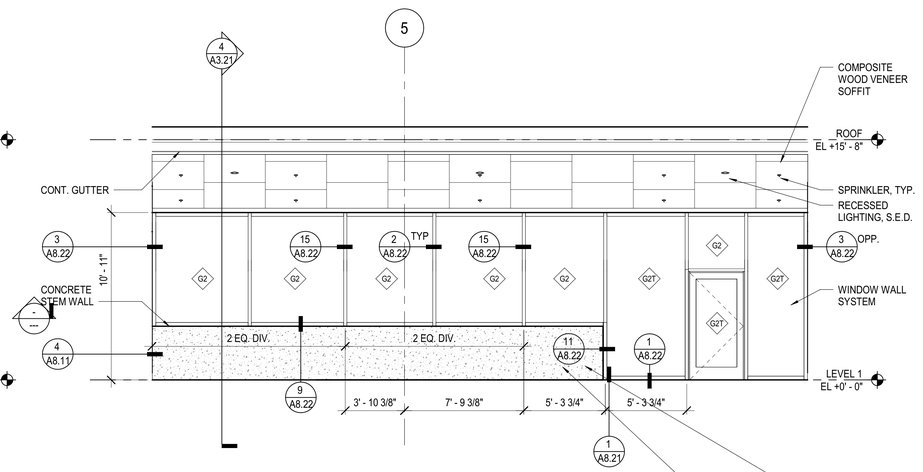

3 A3.21 NORTH ENTRY - ENLARGED NORTH ELEVATION
SCALE: 1/4" = 1'-0"

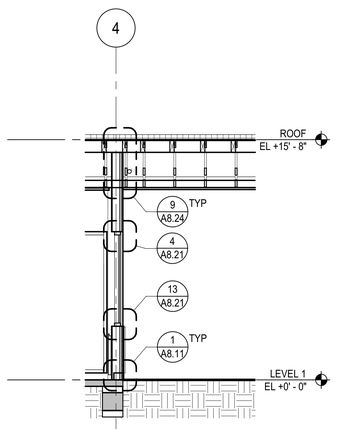

2 A3.21 WALL SECTION @ NORTH ENTRY - EAST ELEVATION
SCALE: 1/4" = 1'-0"

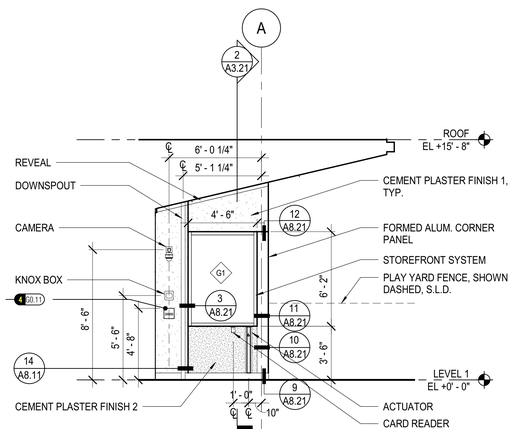

1 A3.21 NORTH ENTRY - ENLARGED EAST ELEVATION
SCALE: 1/4" = 1'-0"

C:\Users\s.sanchez\Documents\20020-A-CSU STANISLAUS CDC- CENTRAL_ehdd-sjling.rvt

Division of the State Architect

APPROVED
DIV. OF THE STATE ARCHITECT
APP: 02-119316 INC:
REVIEWED FOR
SS☐ FLS☐ ACS☑
DATE: 03/24/2022

Office of the State Fire Marshal

OFFICE OF THE STATE FIRE MARSHAL APPROVED FIRE AND PANIC ONLY
03/14/22
21-0498
Approval of this plan does not authorize or approve any omission or deviation from applicable requirements. Final approval is subject to field inspection. One set of approved plans shall be available on the project site at all times.

CSUS CHILD DEVELOPMENT CENTER

CALIFORNIA STATE UNIVERSITY, STANISLAUS
ONE UNIVERSITY CIRCLE
TURLOCK, CA 95382

ehdd.

PIER 1, BAY 2
THE EMBARCADERO
SAN FRANCISCO, CA 94111

INFO@EHDD.COM
+1 415-285-9193

Consultant

Stamp

LICENSED ARCHITECT
JENNIFER K DEVLIN
No. C-37342
Ren. 5-31-23
STATE OF CALIFORNIA

Printing	Date
95% CONSTRUCTION DOCUMENTS	06.25.2021
PERMIT SET	08.16.2021
PERMIT SET - DSA V2	12.15.2021
PERMIT SET - SFM	12.21.2021

Revisions and Description	Date

Scale
As indicated

Drawn by
Author

EHDD Job Number
20020

Sheet Title
ENLARGED ELEVATIONS & SECTIONS

Sheet Number
A3.21 V3

12/13/2021 12:09:18 PM

ELEVATION NOTES & LEGEND

1. SEE A0.31 DOOR SCHEDULE FOR SIZES AND DETAIL REFERENCES.
2. SEE A2.21 FOR SIGNAGE REFERENCES.
3. SEE A8.11 FOR TYPICAL CEMENT PLASTER ASSEMBLY DETAILS

G# G#T GLASS TYPE, 'T' DENOTES TEMPERED GLASS, SEE SPEC SECTION 08 80 00

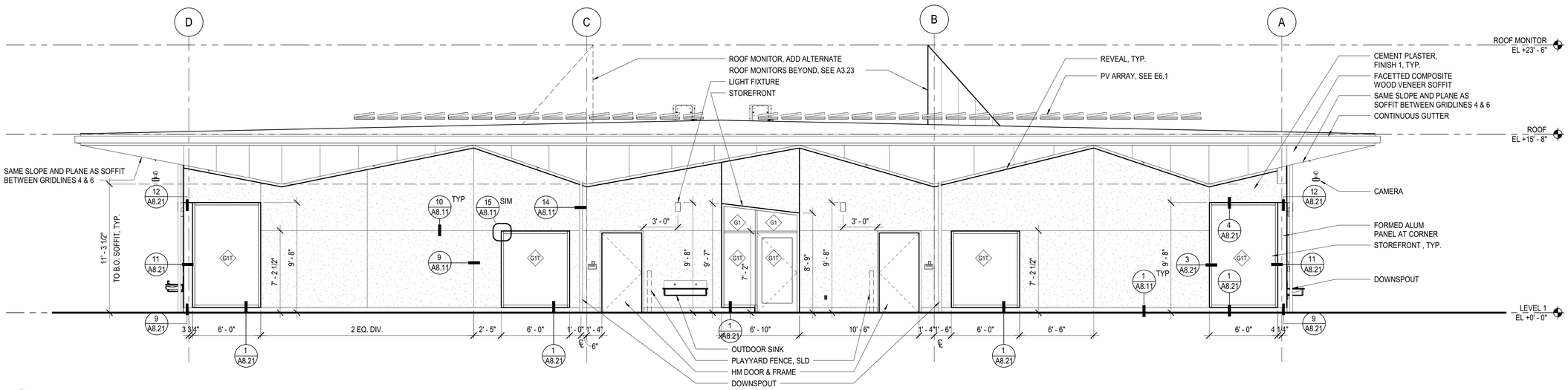

5 A3.22 PRESCHOOL CLASSROOM - ENLARGED EAST ELEVATION
SCALE: 1/4" = 1'-0"

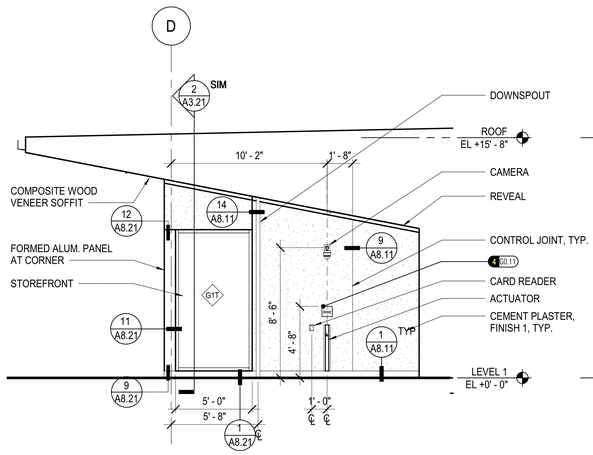

3 A3.22 SOUTH ENTRY - ENLARGED EAST ELEVATION
SCALE: 1/4" = 1'-0"

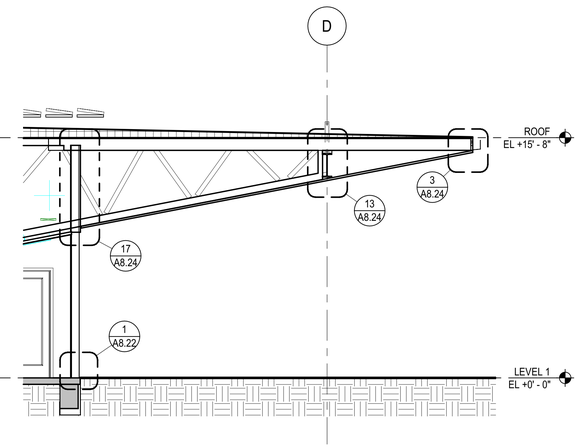

2 A3.22 WALL SECTION @ SOUTH ENTRY
SCALE: 1/4" = 1'-0"

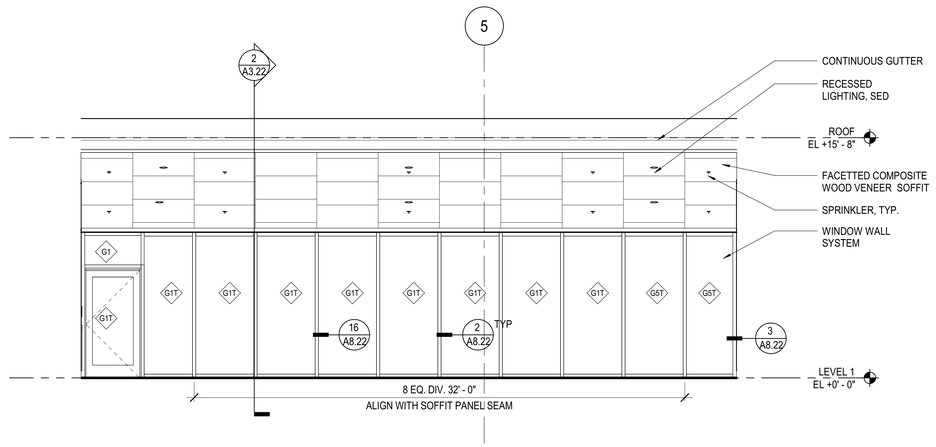

1 A3.22 SOUTH ENTRY - ENLARGED SOUTH ELEVATION
SCALE: 1/4" = 1'-0"

C:\Users\s.sanchez\Documents\20020-A-CSU STANISLAUS CDC- CENTRAL_ehdd-sjlng.rvt

Division of the State Architect
APPROVED
DIV. OF THE STATE ARCHITECT
APP: 02-119316 INC:
REVIEWED FOR
SS☐ FLS☐ ACS☑
DATE: 03/24/2022

Office of the State Fire Marshal

OFFICE OF THE STATE FIRE MARSHAL
APPROVED FIRE AND PANIC ONLY
03/14/22
21-0498
Approval of this plan does not authorize or approve any omission or deviation from applicable regulations. Final approval is subject to field inspection. One set of approved plans shall be available on the project site at all times.

CSUS CHILD DEVELOPMENT CENTER

CALIFORNIA STATE
UNIVERSITY, STANISLAUS
ONE UNIVERSITY CIRCLE
TURLOCK, CA 95382

ehdd.

PIER 1, BAY 2
THE EMBARCADERO
SAN FRANCISCO, CA 94111

INFO@EHDD.COM
+1 415-285-9193

Consultant

Stamp

Printing	Date
95% CONSTRUCTION DOCUMENTS	06.25.2021
PERMIT SET	08.16.2021
PERMIT SET - DSA V2	12.15.2021
PERMIT SET - SFM	12.21.2021

Revisions and Description	Date

Scale
As indicated

Drawn by
Author

EHDD Job Number
20020

Sheet Title
ENLARGED ELEVATIONS & SECTIONS

Sheet Number
A3.22 V3

12/13/2021 12:09:18 PM

ELEVATION NOTES & LEGEND

1. SEE A0.31 DOOR SCHEDULE FOR SIZES AND DETAIL REFERENCES.
2. SEE A2.21 FOR SIGNAGE REFERENCES.
3. SEE A8.11 FOR TYPICAL CEMENT PLASTER ASSEMBLY DETAILS

G# G#T GLASS TYPE, 'T' DENOTES TEMPERED GLASS, SEE SPEC SECTION 08 80 00

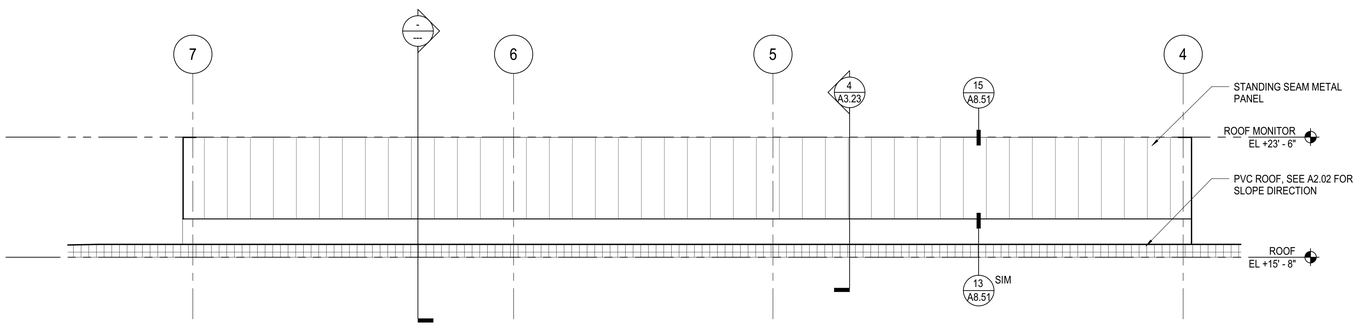

5 A3.23 NORTH ROOF MONITOR - ENLARGED NORTH ELEVATION
SCALE: 1/4" = 1'-0"

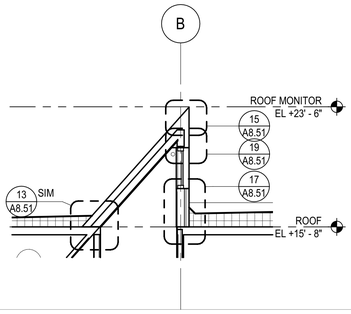

4 A3.23 SECTION @ ROOF MONITOR
SCALE: 1/4" = 1'-0"

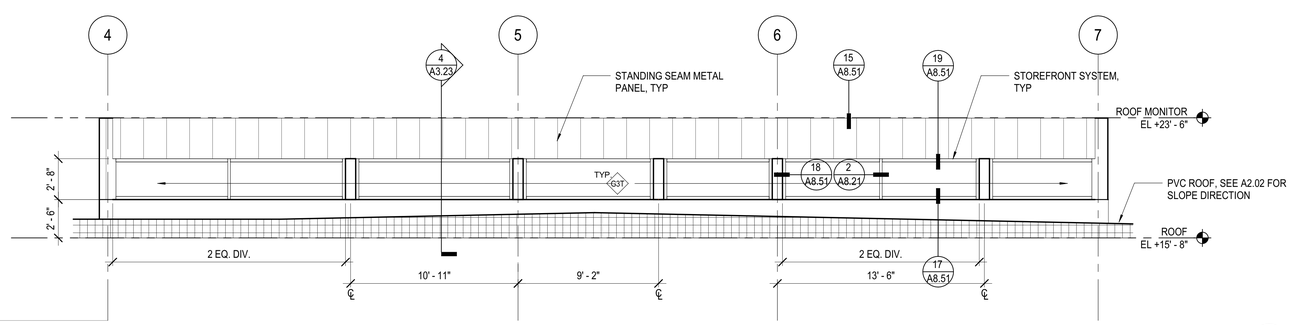

2 A3.23 NORTH ROOF MONITOR - ENLARGED SOUTH ELEVATION
SCALE: 1/4" = 1'-0"

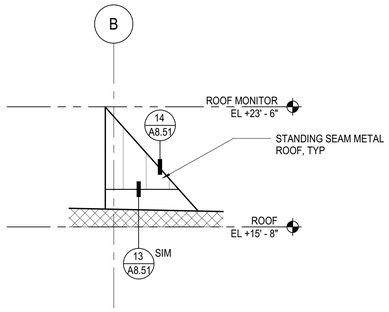

1 A3.23 NORTH ROOF MONITOR - ENLARGED EAST ELEVATION
SCALE: 1/4" = 1'-0"

Division of the State

APPROVED
DIV. OF THE STATE ARCHITECT
APP: 02-119316 INC:
REVIEWED FOR
SS☐ FLS☐ ACS☑
DATE: 03/24/2022

Office of the State Fire Marshal

OFFICE OF THE STATE FIRE MARSHAL
APPROVED FIRE AND PANIC ONLY
03/14/22
21-0498
Approval of this plan does not authorize or approve any omission or deviation from applicable regulations. Final approval is subject to field inspection. One set of approved plans shall be available on the project site at all times.

CSUS CHILD DEVELOPMENT CENTER

CALIFORNIA STATE UNIVERSITY, STANISLAUS
ONE UNIVERSITY CIRCLE
TURLOCK, CA 95382

ehdd.

PIER 1, BAY 2
THE EMBARCADERO
SAN FRANCISCO, CA 94111

INFO@EHDD.COM
+1 415-285-9193

Consultant

Stamp

LICENSED ARCHITECT
JENNIFER K DEVLIN
No. C27334
Ren. 5-31-23
STATE OF CALIFORNIA

Printing	Date
95% CONSTRUCTION DOCUMENTS	06.25.2021
PERMIT SET	08.16.2021
PERMIT SET - DSA V2	12.15.2021
PERMIT SET - SFM	12.21.2021

Revisions and Description	Date

Scale
As indicated

Drawn by
Author

EHDD Job Number
20020

Sheet Title
ENLARGED ELEVATIONS & SECTIONS

Sheet Number
A3.23 V3

C:\Users\s.sanchez\Documents\20020-A-CSU STANISLAUS CDC- CENTRAL_ehdd-sijing.rvt

12/16/2021 4:45:41 PM

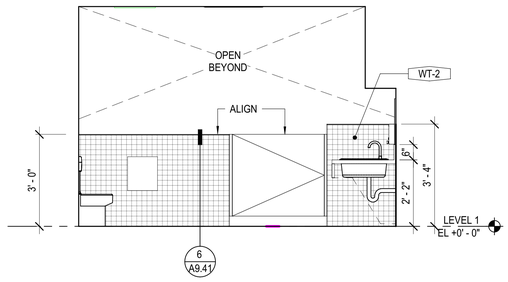

8 A4.01 TOILET 108 - WEST (1)
SCALE: 1/2" = 1'-0"

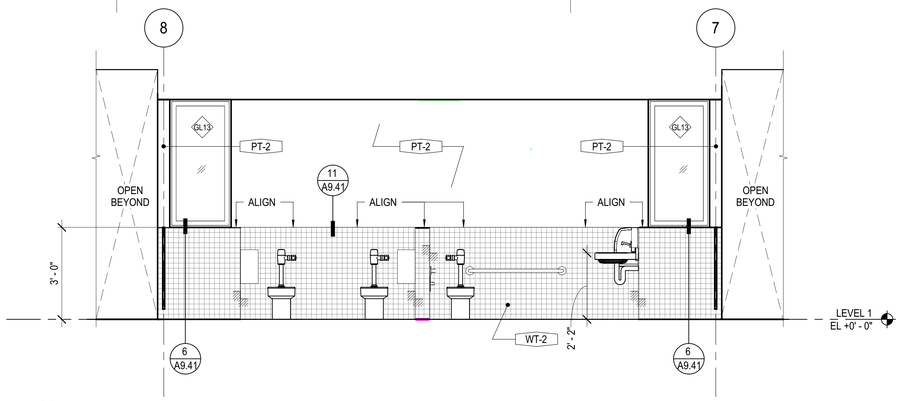

7 A4.01 TOILET 108 - SOUTH
SCALE: 1/2" = 1'-0"

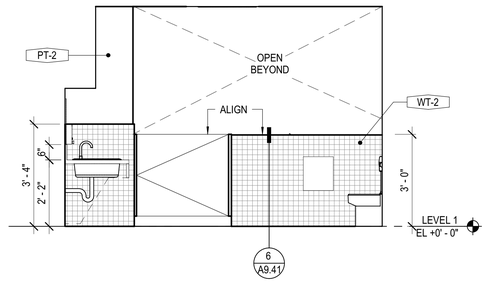

6 A4.01 TOILET 108 - EAST (1)
SCALE: 1/2" = 1'-0"

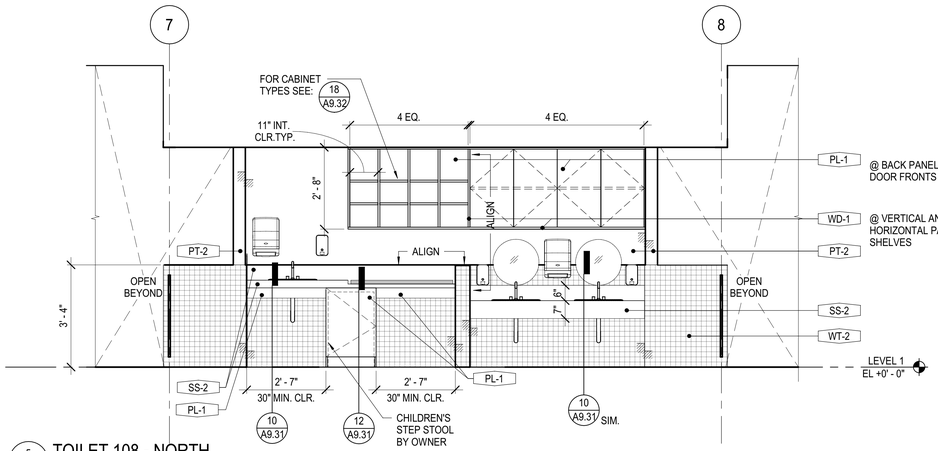

5 A4.01 TOILET 108 - NORTH
SCALE: 1/2" = 1'-0"

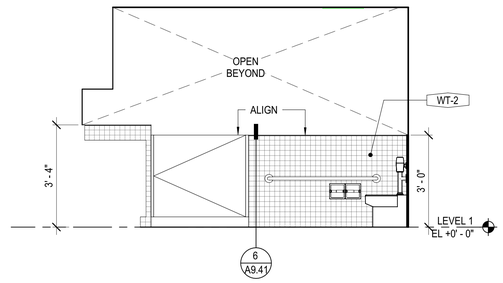

4 A4.01 TOILET 108 - EAST (2)
SCALE: 1/2" = 1'-0"

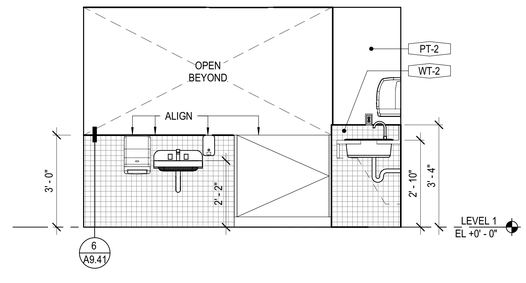

3 A4.01 TOILET 108 - WEST (2)
SCALE: 1/2" = 1'-0"

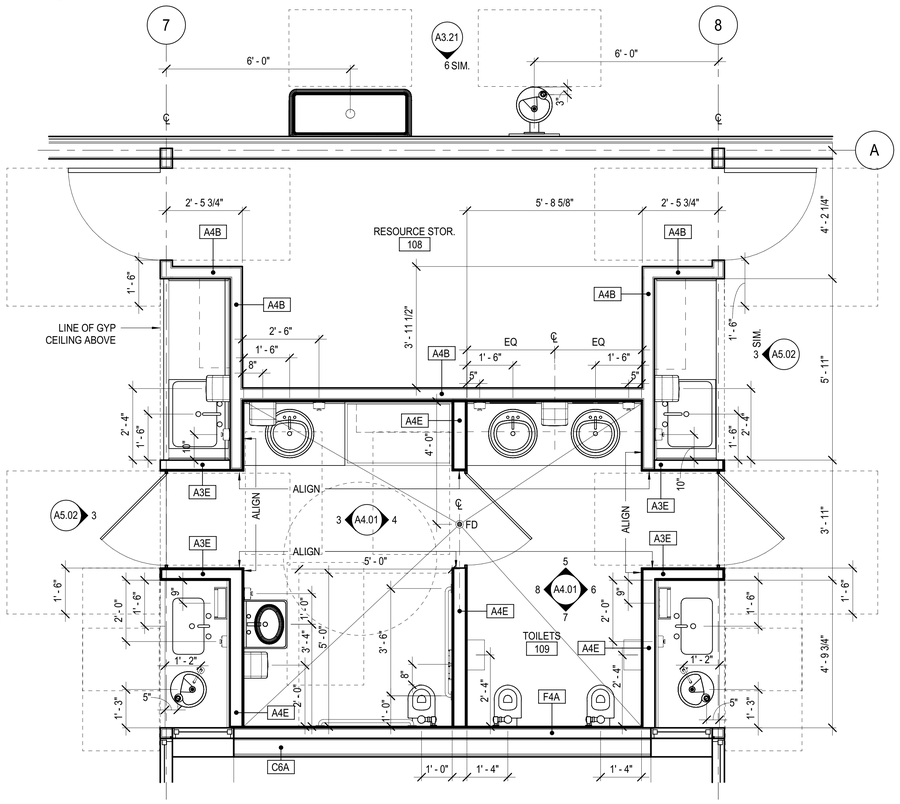

2 A4.01 ENLARGED TOILETS 109 - CODE COMPLIANCE PLAN
SCALE: 1/2" = 1'-0"

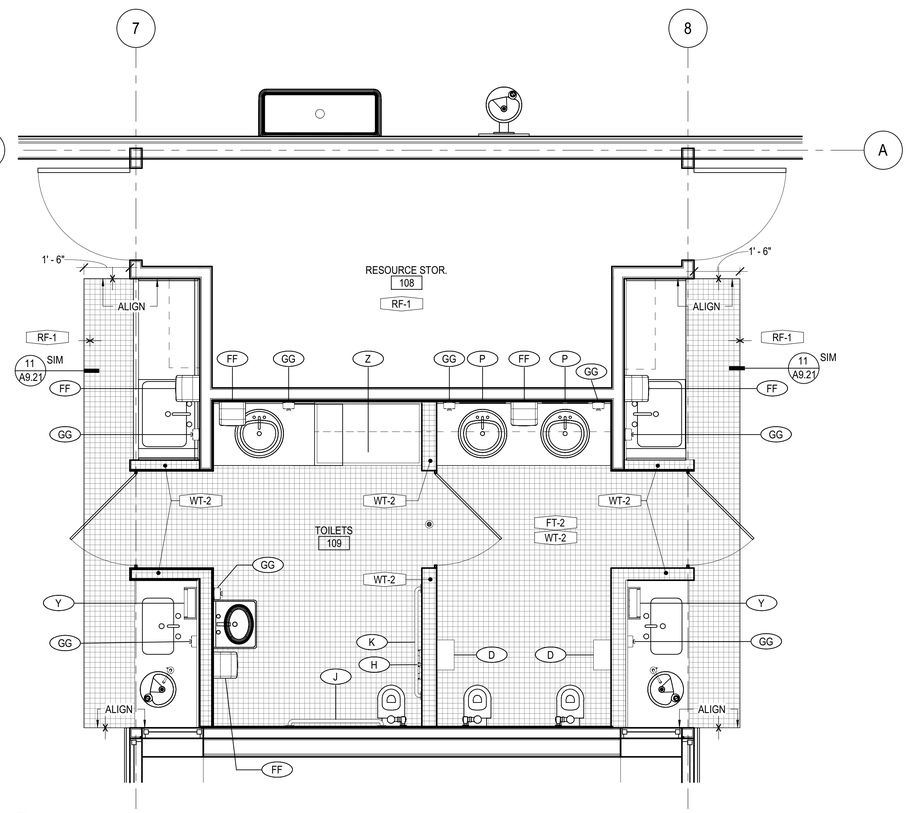

1 A4.01 ENLARGED TOILETS 109 - FINISH AND ACCESSORIES PLAN
SCALE: 1/2" = 1'-0"

ENLARGED PLAN SHEET NOTES

1. FOR GENERAL NOTES APPLICABLE TO ALL DRAWINGS REFER TO THE "PROJECT GENERAL NOTES".
2. FOR TOILET ACCESSORY MOUNTING HEIGHTS SEE G0.12.
3. SEE PLUMBING FOR PLUMBING FIXTURE SCHEDULE.
4. SEE A0.31 DOOR SCHEDULE FOR SIZES, HARDWARE AND DETAIL REFERENCES.
5. USE PAINT PT-1 ON ALL GYPSUM SURFACES THROUGHOUT, TYP UON.
6. CONTINUE SPECIFIED FLOORING MATERIALS BENEATH CASEWORK, TYP UON.
7. SEE A5 SERIES INTERIOR ELEVATIONS FOR ADDITIONAL FINISH INFORMATION.
8. SEE A2.21 FOR FINISH SCHEDULE AND SIGNAGE REFERENCES.

G# GWT GLASS TYPE, 'T' DENOTES TEMPERED GLASS, SEE SPEC SECTION 08 80 00

TOILET ACCESSORIES SCHEDULE

TAG	DESCRIPTION	MFR	MODEL
A	SURFACE MOUNTED SEAT COVER DISPENSER	BOBRICK	B-221
D	TOILET TISSUE DISPENSER	GEORGIA PACIFIC	COMPACT CORELESS 56744A
FF	AUTO SENSOR SURFACE MOUNTED PAPERTOWEL DISPENSER	KIMBERLY CLARK	SANITOUCH 09990
G	SURFACE MOUNTED SANITARY NAPKIN DISPOSAL	BOBRICK	B-270
GG	SURFACE MOUNTED SOAP DISPENSER	GOJO	ADX-12
H	RECESSED DUAL ROLL TOILET TISSUE DISPENSER.	BOBRICK	B-6977
J	STAINLESS STEEL GRAB BAR	BOBRICK	B-6806x36
K	STAINLESS STEEL GRAB BAR	BOBRICK	B-6806x42
P	CHILDREN'S CIRCULAR MIRROR, 18" DIA	N/A	N/A
Q	FULL LENGTH MIRROR - 24"W X 60"H	N/A	N/A
R1	MIRROR, 72" x 30"	N/A	N/A
R2	MIRROR 18"W X 30"H	N/A	N/A
V	HORIZONTAL WALL MOUNT BABY CHANGING STATION	KOALA KARE	KB-100-0
W	STAINLESS STEEL DOUBLE ROBE HOOK	BOBRICK	B-76727
X1	12 GALLON ALUMINUM WASTE RECEPTACLE	RUBBERMAID	FGAOT15SAPL
X2	STAINLESS STEEL CIRCULAR WASTE CHUTE FOR MOUNTING IN COUNTERTOP	BOBRICK	B-529
Y	ROLL PAPER TOWEL DISPENSER	BOBRICK	B-253
Z	EXTRA VINYL TODDLER CHANGING TABLE PAD 23" x 41.5" x 1"	LAKESHORE	AP303

Division of the State Architect

APPROVED
DIV. OF THE STATE ARCHITECT
APP: 02-119316 INC:
REVIEWED FOR
SS☐ FLS☐ ACS☑
DATE: 03/24/2022

Office of the State Fire Marshal

OFFICE OF THE STATE FIRE MARSHAL
APPROVED FIRE AND PANIC ONLY
03/14/22
21-0498
Approval of this plan does not authorize or approve any omission or deviation from applicable requirements. Final approval is subject to field inspection. One set of approved plans shall be available on the project site at all times.

CSUS CHILD DEVELOPMENT CENTER

CALIFORNIA STATE UNIVERSITY, STANISLAUS
ONE UNIVERSITY CIRCLE
TURLOCK, CA 95382

ehdd.

PIER 1, BAY 2
THE EMBARCADERO
SAN FRANCISCO, CA 94111

INFO@EHDD.COM
+1 415-285-9193

Consultant

Stamp

LICENSED ARCHITECT
JENNIFER K. DEVLIN
No. C-37343
Ren. 5-31-23
STATE OF CALIFORNIA

Printing	Date
95% CONSTRUCTION DOCUMENTS	06.25.2021
PERMIT SET	08.16.2021
PERMIT SET - DSA V2	12.15.2021
PERMIT SET - SFM	12.21.2021

Revisions and Description	Date

Scale
As indicated

Drawn by
Author

EHDD Job Number
20020

Sheet Title
ENLARGED RESTROOM PLANS AND ELEVATIONS

Sheet Number
A4.01 V3

C:\Users\ quinones\OneDrive - EHDD\Documents\20020-A-CSU STANISLAUS CDC- CENTRAL_ quinones.rvt

12/10/2021 9:32:31 AM

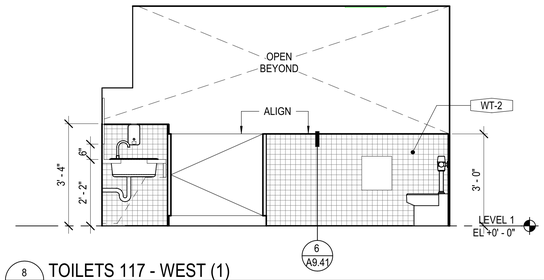

8 A4.02 TOILETS 117 - WEST (1)
SCALE: 1/2" = 1'-0"

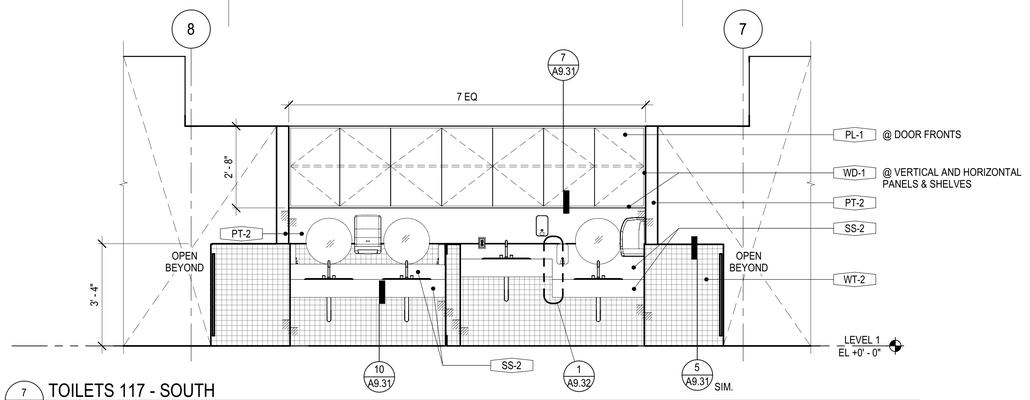

7 A4.02 TOILETS 117 - SOUTH
SCALE: 1/2" = 1'-0"

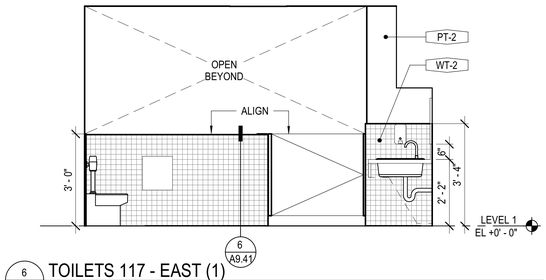

6 A4.02 TOILETS 117 - EAST (1)
SCALE: 1/2" = 1'-0"

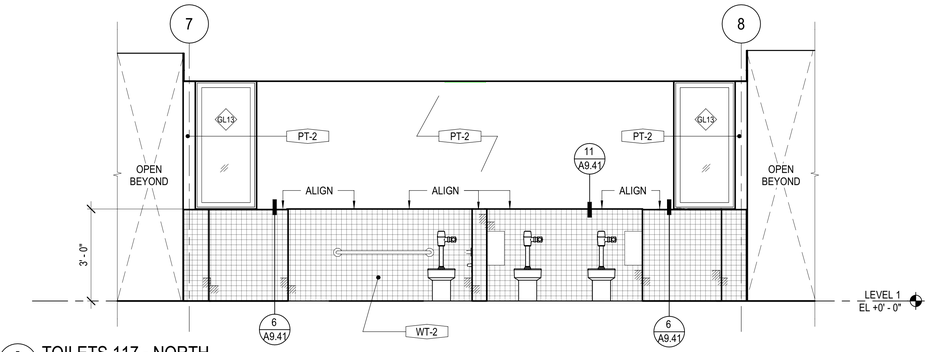

5 A4.02 TOILETS 117 - NORTH
SCALE: 1/2" = 1'-0"

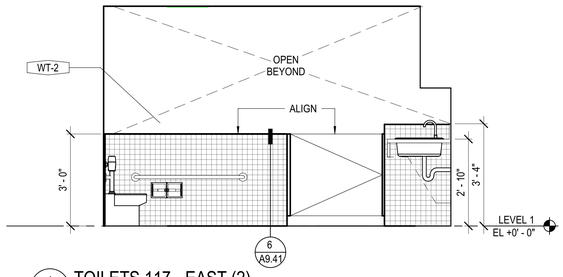

4 A4.02 TOILETS 117 - EAST (2)
SCALE: 1/2" = 1'-0"

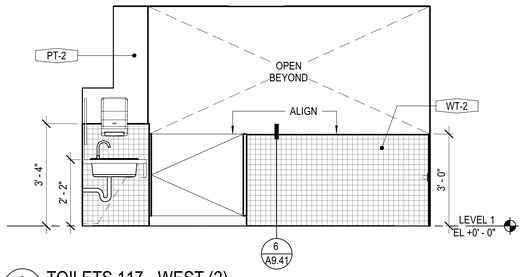

3 A4.02 TOILETS 117 - WEST (2)
SCALE: 1/2" = 1'-0"

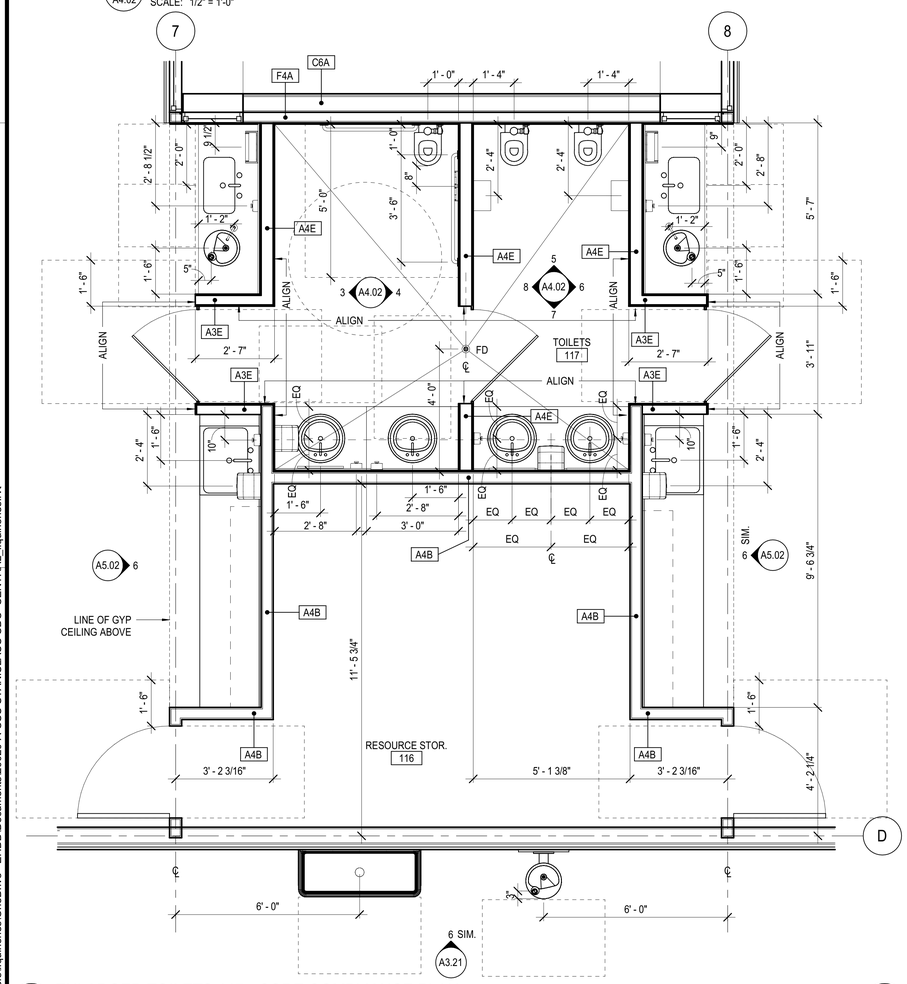

2 A4.02 ENLARGED TOILETS 117 - CODE COMPLIANCE PLAN
SCALE: 1/2" = 1'-0"

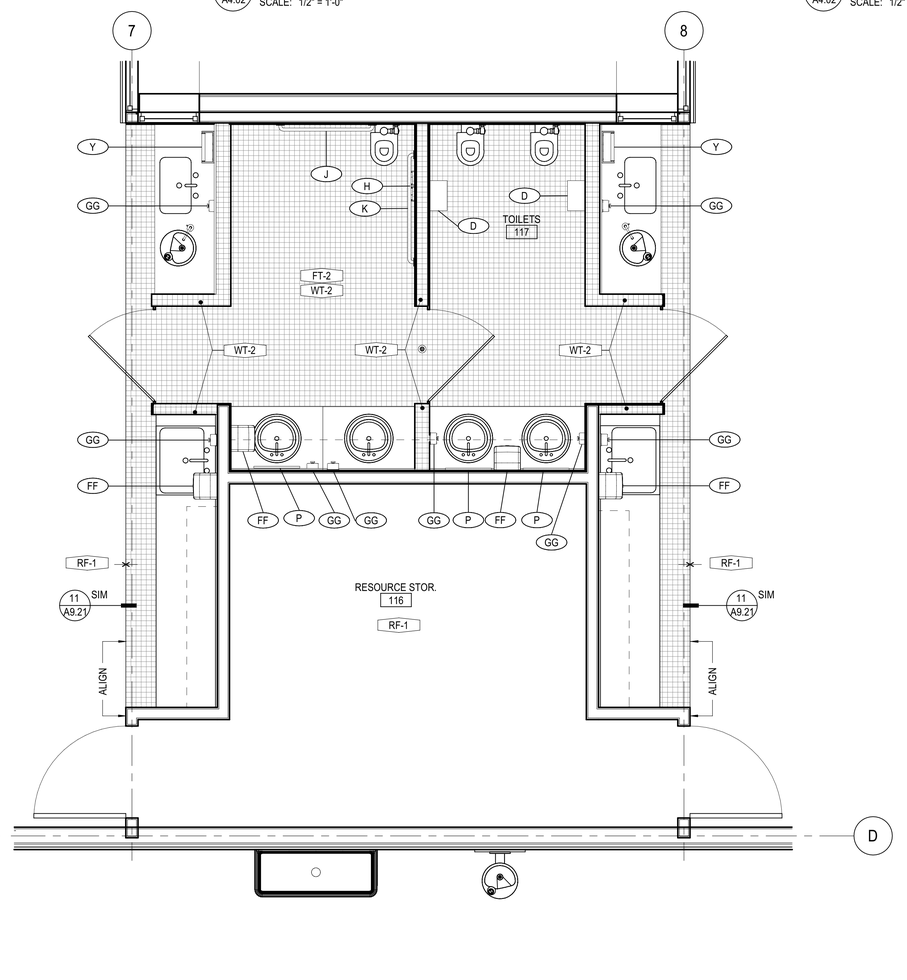

1 A4.02 ENLARGED TOILETS 117 - FINISH AND ACCESSORIES PLAN
SCALE: 1/2" = 1'-0"

ENLARGED PLAN SHEET NOTES

1. FOR GENERAL NOTES APPLICABLE TO ALL DRAWINGS REFER TO THE "PROJECT GENERAL NOTES".
2. FOR TOILET ACCESSORY MOUNTING HEIGHTS SEE G0.12.
3. SEE PLUMBING FOR PLUMBING FIXTURE SCHEDULE.
4. SEE A0.31 DOOR SCHEDULE FOR SIZES, HARDWARE AND DETAIL REFERENCES.
5. USE PAINT PT-1 ON ALL GYPSUM SURFACES THROUGHOUT, TYP UON.
6. CONTINUE SPECIFIED FLOORING MATERIALS BENEATH CASEWORK, TYP UON.
7. SEE A5 SERIES INTERIOR ELEVATIONS FOR ADDITIONAL FINISH INFORMATION.
8. SEE A2.21 FOR FINISH SCHEDULE AND SIGNAGE REFERENCES.

G# GBT GLASS TYPE, 'T' DENOTES TEMPERED GLASS, SEE SPEC SECTION 08 80 00

TOILET ACCESSORIES SCHEDULE

TAG	DESCRIPTION	MFR	MODEL
A	SURFACE MOUNTED SEAT COVER DISPENSER	BOBRICK	B-221
D	TOILET TISSUE DISPENSER	GEORGIA PACIFIC	COMPACT CORELESS 56744A
FF	AUTO SENSOR SURFACE MOUNTED PAPERTOWEL DISPENSER	KIMBERLY CLARK	SANITOUCH 09990
G	SURFACE MOUNTED SANITARY NAPKIN DISPOSAL	BOBRICK	B-270
GG	SURFACE MOUNTED SOAP DISPENSER	GOJO	ADX-12
H	RECESSED DUAL ROLL TOILET TISSUE DISPENSER.	BOBRICK	B-6977
J	STAINLESS STEEL GRAB BAR	BOBRICK	B-6806x36
K	STAINLESS STEEL GRAB BAR	BOBRICK	B-6806x42
P	CHILDREN'S CIRCULAR MIRROR, 18" DIA	N/A	N/A
Q	FULL LENGTH MIRROR - 24"W X 60"H	N/A	N/A
R1	MIRROR, 72" x 30"	N/A	N/A
R2	MIRROR 18"W X 30"H	N/A	N/A
V	HORIZONTAL WALL MOUNT BABY CHANGING STATION	KOALA KARE	KB-100-0
W	STAINLESS STEEL DOUBLE ROBE HOOK	BOBRICK	B-76727
X1	12 GALLON ALUMINUM WASTE RECEPTACLE	RUBBERMAID	FGAOT15SAPL
X2	STAINLESS STEEL CIRCULAR WASTE CHUTE FOR MOUNTING IN COUNTERTOP	BOBRICK	B-529
Y	ROLL PAPER TOWEL DISPENSER	BOBRICK	B-253
Z	EXTRA VINYL TODDLER CHANGING TABLE PAD 23" x 41.5" x 1"	LAKESHORE	AP303

Division of the State Architect

APPROVED
DIV. OF THE STATE ARCHITECT
APP: 02-119316 INC:
REVIEWED FOR
SS ☐ FLS ☐ ACS ☑
DATE: 03/24/2022

Office of the State Fire Marshal

OFFICE OF THE STATE FIRE MARSHAL
APPROVED FIRE AND PANIC ONLY
03/14/22
21-0498
Approval of this plan does not authorize or approve any omission or deviation from applicable requirements. Final approval is subject to field inspection. One set of approved plans shall be available on the project site at all times.

CSUS CHILD DEVELOPMENT CENTER

CALIFORNIA STATE UNIVERSITY, STANISLAUS
ONE UNIVERSITY CIRCLE
TURLOCK, CA 95382

ehdd.

PIER 1, BAY 2
THE EMBARCADERO
SAN FRANCISCO, CA 94111

INFO@EHDD.COM
+1 415-285-9193

Consultant

Stamp

LICENSED ARCHITECT
JENNIFER K DEVLIN
Ren. 5-31-23
STATE OF CALIFORNIA

Printing	Date
95% CONSTRUCTION DOCUMENTS	06.25.2021
PERMIT SET	08.16.2021
PERMIT SET - DSA V2	12.15.2021
PERMIT SET - SFM	12.21.2021

Revisions and Description	Date

Scale
As indicated

Drawn by
Author

EHDD Job Number
20020

Sheet Title
ENLARGED RESTROOM PLANS AND ELEVATIONS

Sheet Number
A4.02 V3

C:\Users\jquinones\OneDrive - EHDD\Documents\20020-A-CSU STANISLAUS CDC- CENTRAL_jquinones.rvt

12/17/2021 2:21:54 PM

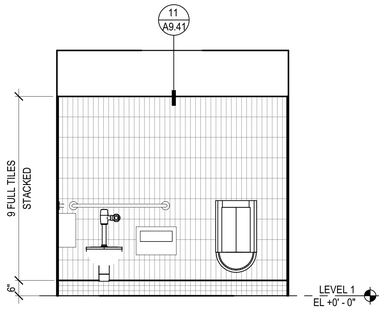

10 A4.03a SINGLE ALL GENDER 123A - WEST
SCALE: 1/2" = 1'-0"

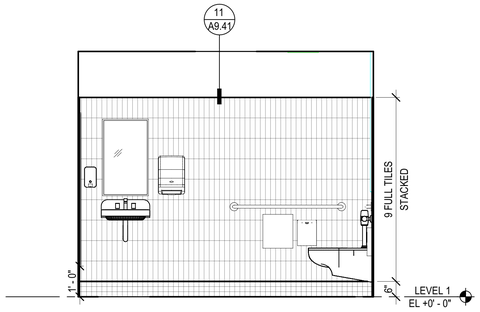

9 A4.03a SINGLE ALL GENDER 123A - SOUTH
SCALE: 1/2" = 1'-0"

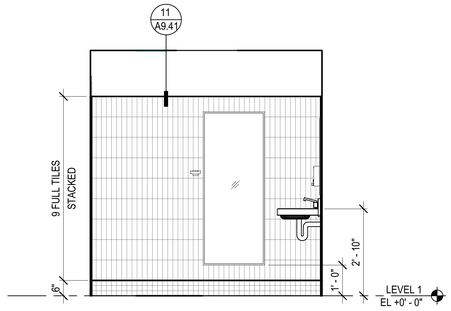

8 A4.03a SINGLE ALL GENDER 123A - EAST
SCALE: 1/2" = 1'-0"

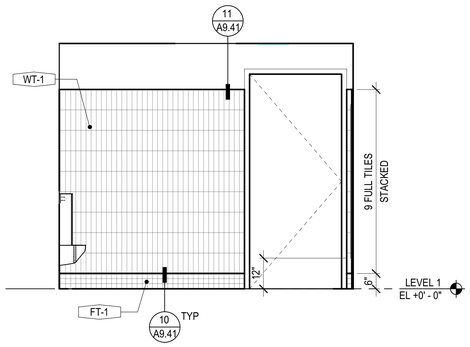

7 A4.03a SINGLE ALL GENDER 123A - NORTH
SCALE: 1/2" = 1'-0"

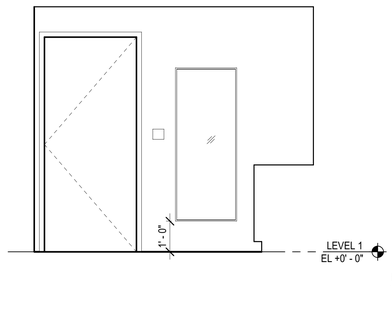

6 A4.03a LACTATION 124 - SOUTH
SCALE: 1/2" = 1'-0"

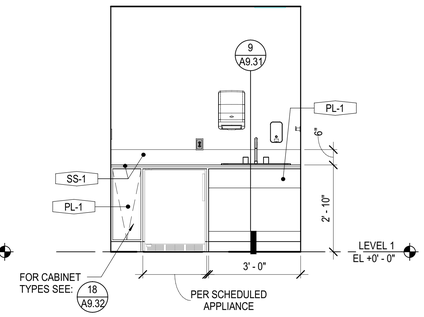

5 A4.03a LACTATION 124 - WEST
SCALE: 1/2" = 1'-0"

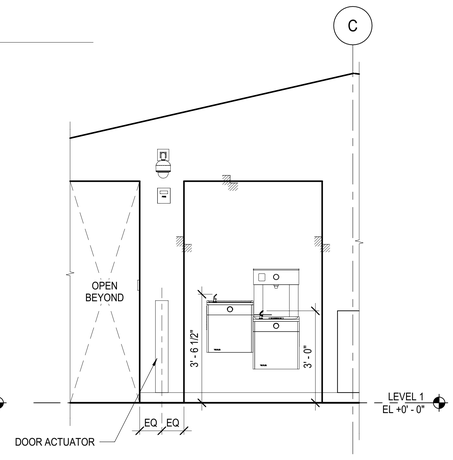

3 A4.03a DRINKING FOUNTAIN
SCALE: 1/2" = 1'-0"

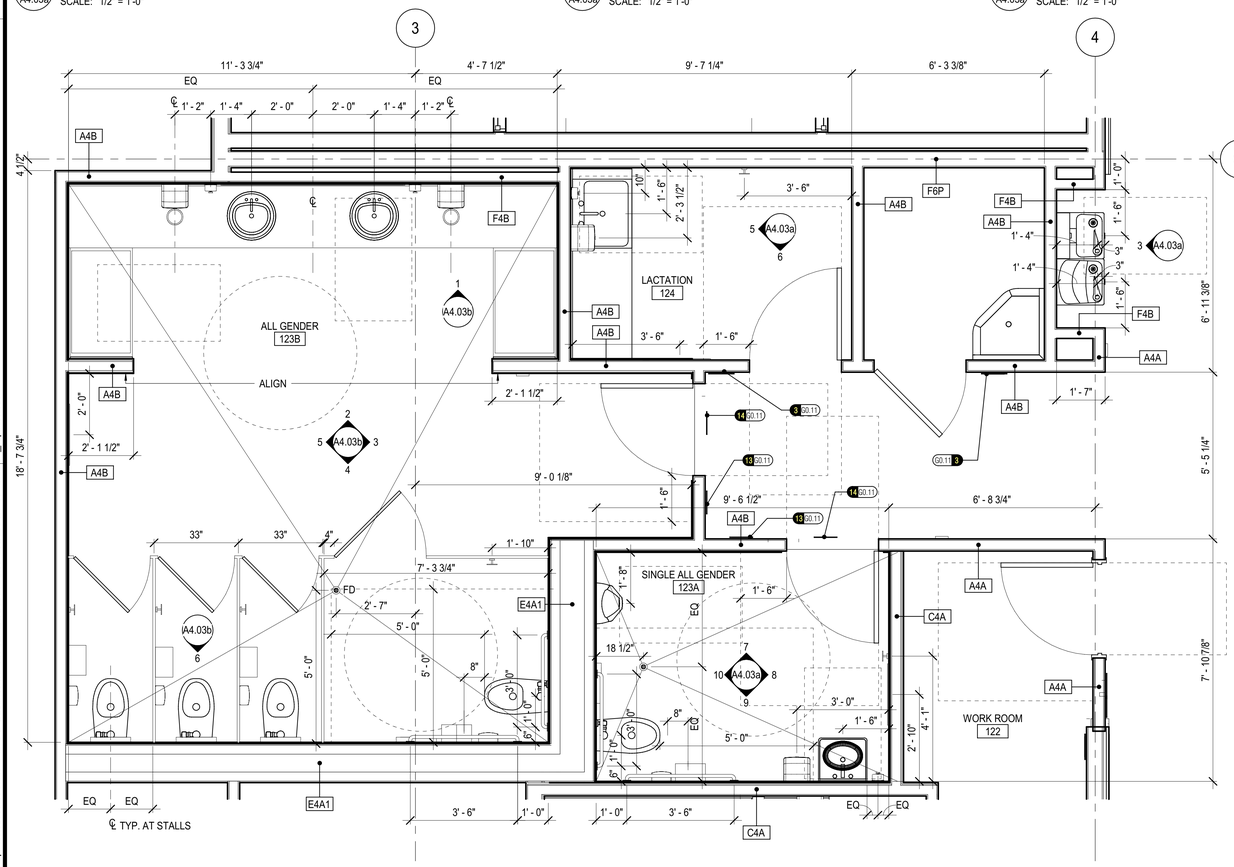

2 A4.03a ENLARGED SIGNLE ALL GENDER 123A & ALL GENDER 123B PLAN - CODE COMPLIANCE
SCALE: 1/2" = 1'-0"

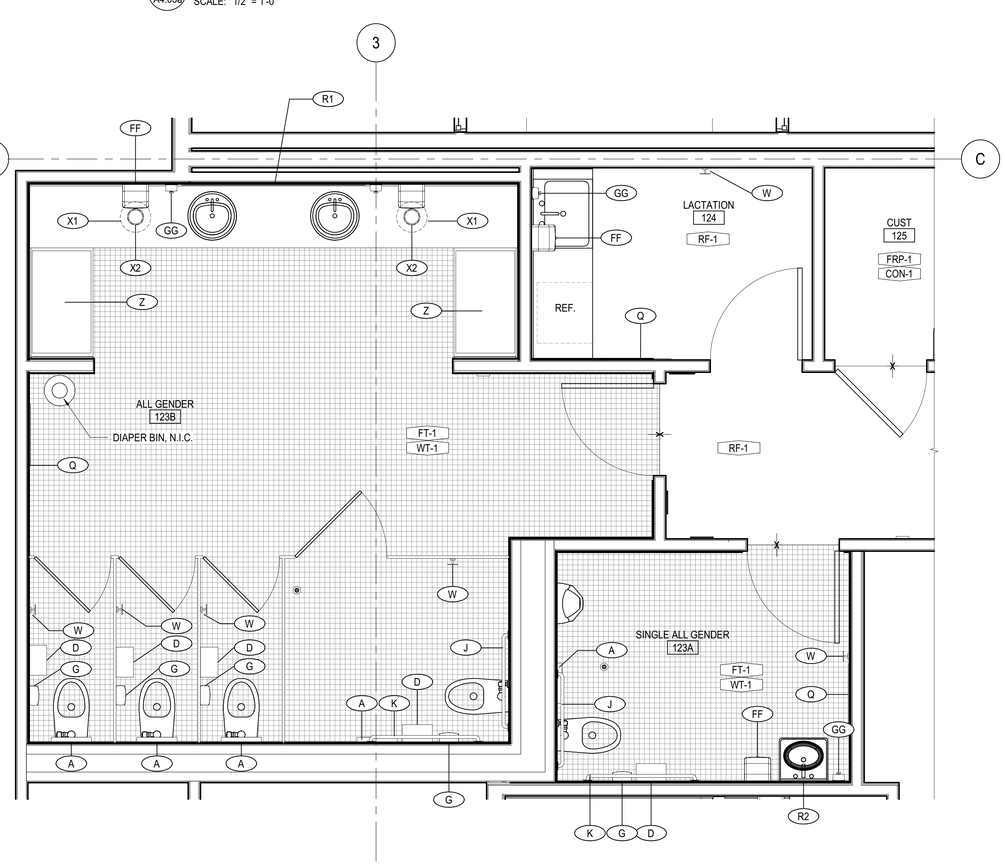

1 A4.03a ENLARGED SIGNLE ALL GENDER 123A & ALL GENDER 123B PLAN- FINISH AND ACCESSORIES
SCALE: 1/2" = 1'-0"

ENLARGED PLAN SHEET NOTES

1. FOR GENERAL NOTES APPLICABLE TO ALL DRAWINGS REFER TO THE "PROJECT GENERAL NOTES".
2. FOR TOILET ACCESSORY MOUNTING HEIGHTS SEE G0.12.
3. SEE PLUMBING FOR PLUMBING FIXTURE SCHEDULE.
4. SEE A0.31 DOOR SCHEDULE FOR SIZES, HARDWARE AND DETAIL REFERENCES.
5. USE PAINT PT-1 ON ALL GYPSUM SURFACES THROUGHOUT, TYP UON.
6. CONTINUE SPECIFIED FLOORING MATERIALS BENEATH CASEWORK, TYP UON.
7. SEE A5 SERIES INTERIOR ELEVATIONS FOR ADDITIONAL FINISH INFORMATION.
8. SEE A2.21 FOR FINISH SCHEDULE AND SIGNAGE REFERENCES.

G# GFT GLASS TYPE, 'T' DENOTES TEMPERED GLASS, SEE SPEC SECTION 08 80 00

TOILET ACCESSORIES SCHEDULE

TAG	DESCRIPTION	MFR	MODEL
A	SURFACE MOUNTED SEAT COVER DISPENSER	BOBRICK	B-221
D	TOILET TISSUE DISPENSER	GEORGIA PACIFIC	COMPACT CORELESS 56744A
FF	AUTO SENSOR SURFACE MOUNTED PAPERTOWEL DISPENSER	KIMBERLY CLARK	SANITOUCH 09990
G	SURFACE MOUNTED SANITARY NAPKIN DISPOSAL	BOBRICK	B-270
GG	SURFACE MOUNTED SOAP DISPENSER	GOJO	ADX-12
H	RECESSED DUAL ROLL TOILET TISSUE DISPENSER.	BOBRICK	B-6977
J	STAINLESS STEEL GRAB BAR	BOBRICK	B-6806x36
K	STAINLESS STEEL GRAB BAR	BOBRICK	B-6806x42
P	CHILDREN'S CIRCULAR MIRROR, 18" DIA	N/A	N/A
Q	FULL LENGTH MIRROR - 24"W X 60"H	N/A	N/A
R1	MIRROR, 72" x 30"	N/A	N/A
R2	MIRROR 18"W X 30"H	N/A	N/A
W	STAINLESS STEEL DOUBLE ROBE HOOK	BOBRICK	B-76727
X1	12 GALLON ALUMINUM WASTE RECEPTACLE	RUBBERMAID	FGAOT15SAPL
X2	STAINLESS STEEL CIRCULAR WASTE CHUTE FOR MOUNTING IN COUNTERTOP	BOBRICK	B-529
Y	ROLL PAPER TOWEL DISPENSER	BOBRICK	B-253
Z	EXTRA VINYL TODDLER CHANGING TABLE PAD 23" x 41.5" x 1"	LAKESHORE	AP303

Division of the State Architect

APPROVED
DIV. OF THE STATE ARCHITECT
APP: 02-119316 INC:
REVIEWED FOR
SS☐ FLS☐ ACS☑
DATE: 03/24/2022

Office of the State Fire Marshal

OFFICE OF THE STATE FIRE MARSHAL APPROVED FIRE AND PANIC ONLY
03/14/22
21-0498
Approval of this plan does not authorize or approve any omission or deviation from applicable regulations. Final approval is subject to field inspection. One set of approved plans shall be available on the project site at all times.

CSUS CHILD DEVELOPMENT CENTER

CALIFORNIA STATE UNIVERSITY, STANISLAUS
ONE UNIVERSITY CIRCLE
TURLOCK, CA 95382

ehdd.

PIER 1, BAY 2
THE EMBARCADERO
SAN FRANCISCO, CA 94111

INFO@EHDD.COM
+1 415-285-9193

Consultant

Stamp

LICENSED ARCHITECT
JENNIFER K. DEVITT
No. C-27347
Ren. 5-31-23
STATE OF CALIFORNIA

Printing	Date
95% CONSTRUCTION DOCUMENTS	06.25.2021
PERMIT SET	08.16.2021
PERMIT SET - DSA V2	12.15.2021
PERMIT SET - SFM	12.21.2021

Revisions and Description	Date

Scale
As indicated

Drawn by
Author

EHDD Job Number
20020

Sheet Title
ENLARGED RESTROOM PLANS AND ELEVATIONS

Sheet Number
A4.03av3

C:\Users\ quinones\OneDrive - EHDD\Documents\20020-A-CSU STANISLAUS CDC- CENTRAL_ quinones.rvt

12/16/2021 4:03:16 PM

ENLARGED PLAN SHEET NOTES

1. FOR GENERAL NOTES APPLICABLE TO ALL DRAWINGS REFER TO THE "PROJECT GENERAL NOTES".
2. FOR TOILET ACCESSORY MOUNTING HEIGHTS SEE G0.12.
3. SEE PLUMBING FOR PLUMBING FIXTURE SCHEDULE.
4. SEE A0.31 DOOR SCHEDULE FOR SIZES, HARDWARE AND DETAIL REFERENCES.
5. USE PAINT PT-1 ON ALL GYPSUM SURFACES THROUGHOUT, TYP UON.
6. CONTINUE SPECIFIED FLOORING MATERIALS BENEATH CASEWORK, TYP UON.
7. SEE A5 SERIES INTERIOR ELEVATIONS FOR ADDITIONAL FINISH INFORMATION.
8. SEE A2.21 FOR FINISH SCHEDULE AND SIGNAGE REFERENCES.

G# G#T GLASS TYPE, 'T' DENOTES TEMPERED GLASS, SEE SPEC SECTION 08 80 00

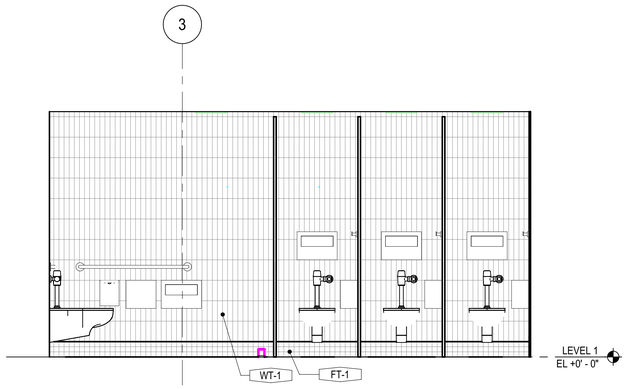

6 A4.03b ALL GENDER 123B - SOUTH (2)
SCALE: 1/2" = 1'-0"

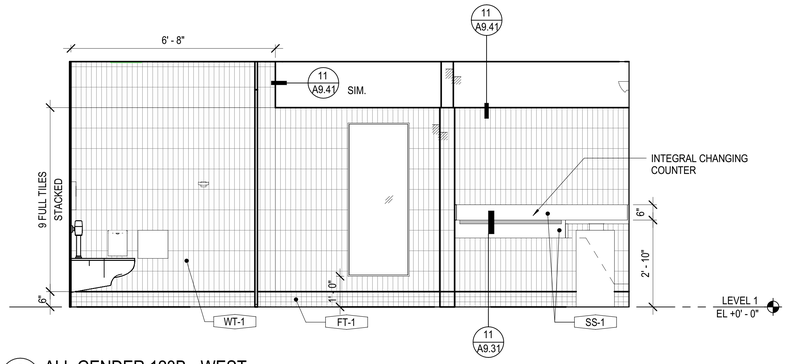

5 A4.03b ALL GENDER 123B - WEST
SCALE: 1/2" = 1'-0"

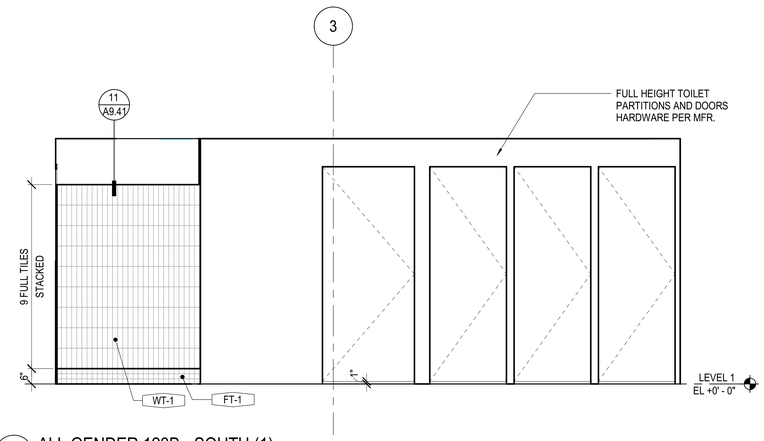

4 A4.03b ALL GENDER 123B - SOUTH (1)
SCALE: 1/2" = 1'-0"

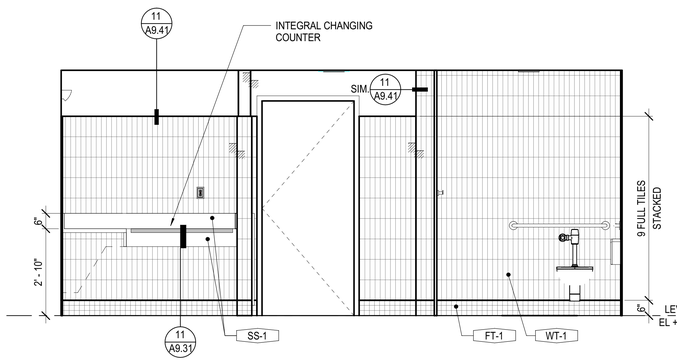

3 A4.03b ALL GENDER 123B - EAST
SCALE: 1/2" = 1'-0"

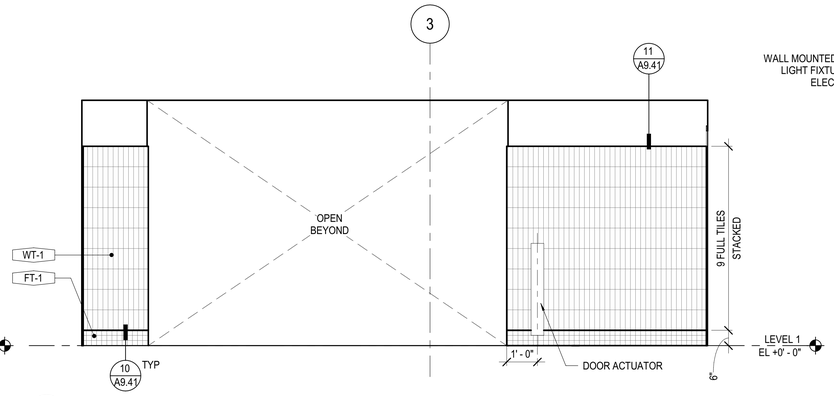

2 A4.03b ALL GENDER 123B - NORTH (1)
SCALE: 1/2" = 1'-0"

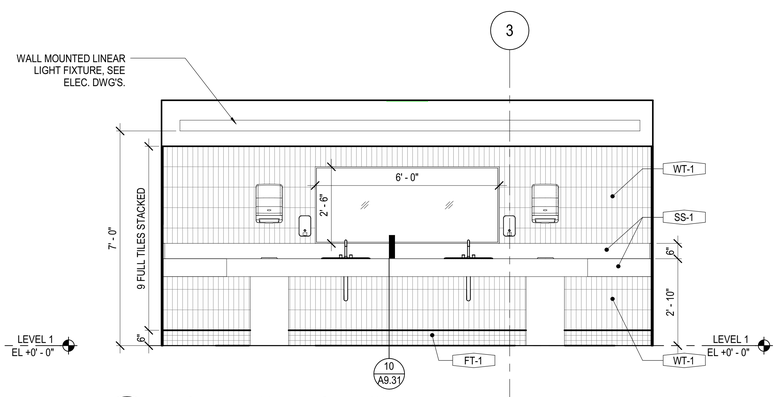

1 A4.03b ALL GENDER 123B - NORTH (2)
SCALE: 1/2" = 1'-0"

Division of the State

APPROVED
DIV. OF THE STATE ARCHITECT
APP: 02-119316 INC:
REVIEWED FOR
SS☐ FLS☐ ACS☑
DATE: 03/24/2022

Office of the State Fire Marshal

OFFICE OF THE STATE FIRE MARSHAL
APPROVED FIRE AND PANIC ONLY
03/14/22
21-0498
Approval of this plan does not authorize or approve any omission or deviation from applicable regulations. Final approval is subject to field inspection. One set of approved plans shall be available on the project site at all times.

CSUS CHILD DEVELOPMENT CENTER

CALIFORNIA STATE UNIVERSITY, STANISLAUS
ONE UNIVERSITY CIRCLE
TURLOCK, CA 95382

ehdd.

PIER 1, BAY 2
THE EMBARCADERO
SAN FRANCISCO, CA 94111

INFO@EHDD.COM
+1 415-285-9193

Consultant

Stamp

LICENSED ARCHITECT
JENNIFER K DEVLIN
No. C27334
Ren. 5-31-23
STATE OF CALIFORNIA

Printing	Date
95% CONSTRUCTION DOCUMENTS	06.25.2021
PERMIT SET	08.16.2021
PERMIT SET - DSA V2	12.15.2021
PERMIT SET - SFM	12.21.2021

Revisions and Description	Date

Scale
As indicated

Drawn by
Author

EHDD Job Number
20020

Sheet Title
ENLARGED RESTROOM ELEVATIONS

Sheet Number
A4.03bv3

C:\Users\l.quinones\OneDrive - EHDD\Documents\20020-A-CSU STANISLAUS CDC- CENTRAL_l.quinones.rvt

12/10/2021 9:32:39 AM

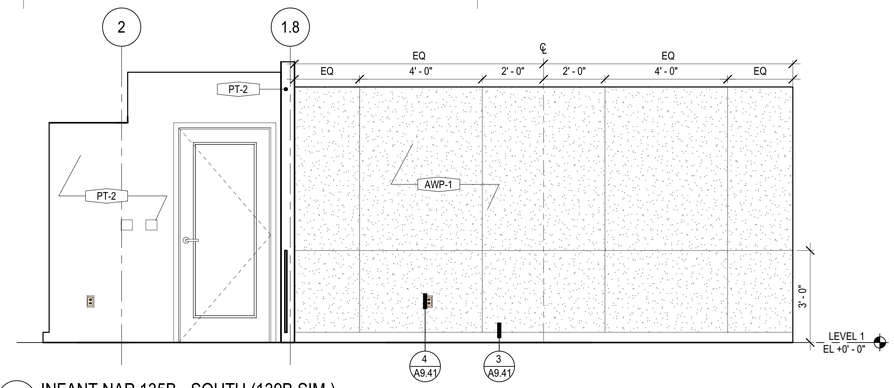

6 A4.04 INFANT NAP 135B - SOUTH (139B SIM.)
SCALE: 1/2" = 1'-0"

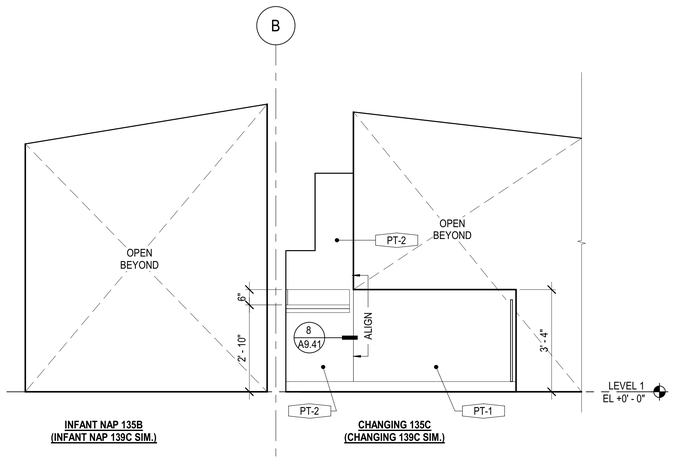

5 A4.04 CHANGING 135C - WEST (139C SIM.)
SCALE: 1/2" = 1'-0"

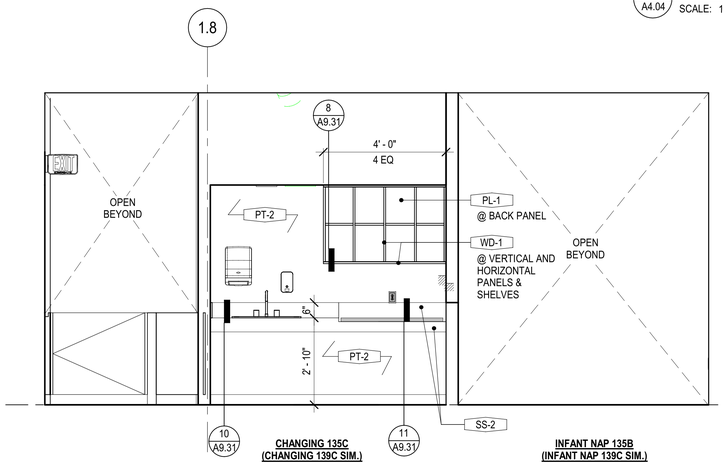

4 A4.04 CHANGING 135C - SOUTH (139C SIM.)
SCALE: 1/2" = 1'-0"

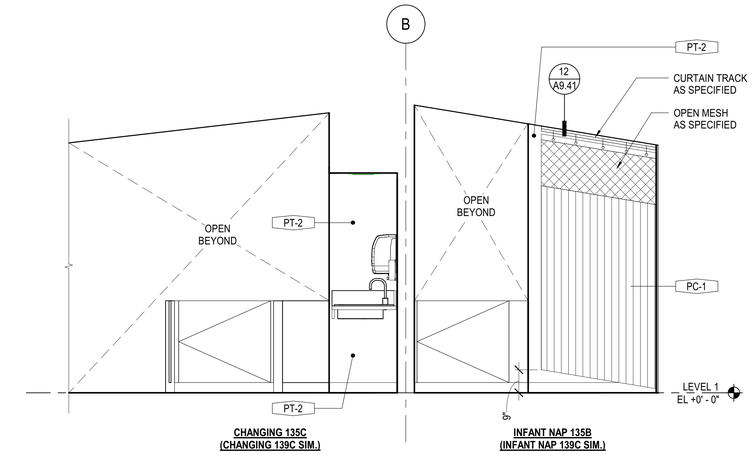

3 A4.04 CHANGING 135C - EAST (139C SIM.)
SCALE: 1/2" = 1'-0"

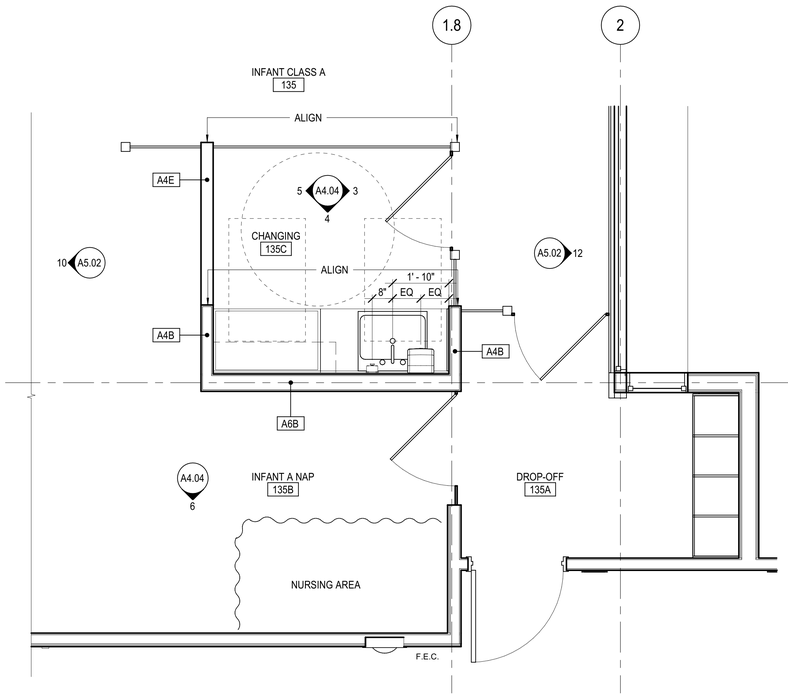

2 A4.04 ENLARGED CHANGING 135C (139C SIM) - CODE COMPLIANCE
SCALE: 1/2" = 1'-0"

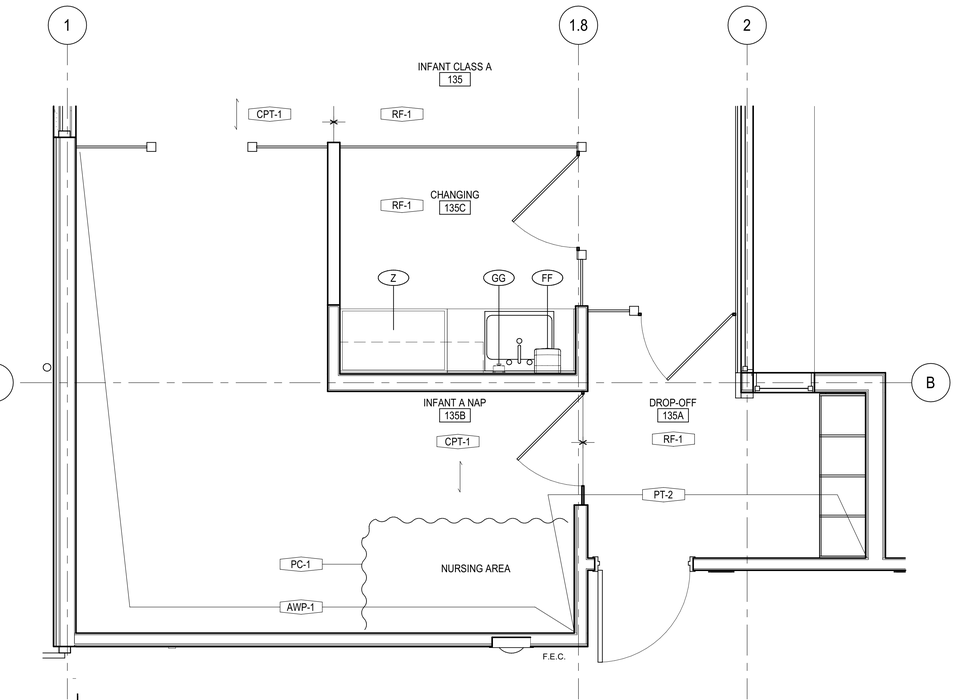

1 A4.04 ENLARGED CHANGING 135C (139C SIM) - FINISH AND ACCESSORIES
SCALE: 1/2" = 1'-0"

ENLARGED PLAN SHEET NOTES

1. FOR GENERAL NOTES APPLICABLE TO ALL DRAWINGS REFER TO THE "PROJECT GENERAL NOTES".
2. FOR TOILET ACCESSORY MOUNTING HEIGHTS SEE G0.12.
3. SEE PLUMBING FOR PLUMBING FIXTURE SCHEDULE.
4. SEE A0.31 DOOR SCHEDULE FOR SIZES, HARDWARE AND DETAIL REFERENCES.
5. USE PAINT PT-1 ON ALL GYPSUM SURFACES THROUGHOUT, TYP UON.
6. CONTINUE SPECIFIED FLOORING MATERIALS BENEATH CASEWORK, TYP UON.
7. SEE A5 SERIES INTERIOR ELEVATIONS FOR ADDITIONAL FINISH INFORMATION.
8. SEE A2.21 FOR FINISH SCHEDULE AND SIGNAGE REFERENCES.

G# GWT GLASS TYPE, 'T' DENOTES TEMPERED GLASS, SEE SPEC SECTION 08 80 00

TOILET ACCESSORIES SCHEDULE

TAG	DESCRIPTION	MFR	MODEL
A	SURFACE MOUNTED SEAT COVER DISPENSER	BOBRICK	B-221
D	TOILET TISSUE DISPENSER	GEORGIA PACIFIC	COMPACT CORELESS 56744A
FF	AUTO SENSOR SURFACE MOUNTED PAPERTOWEL DISPENSER	KIMBERLY CLARK	SANITOUCH 09990
G	SURFACE MOUNTED SANITARY NAPKIN DISPOSAL	BOBRICK	B-270
GG	SURFACE MOUNTED SOAP DISPENSER	GOJO	ADX-12
H	RECESSED DUAL ROLL TOILET TISSUE DISPENSER.	BOBRICK	B-6977
J	STAINLESS STEEL GRAB BAR	BOBRICK	B-6806x36
K	STAINLESS STEEL GRAB BAR	BOBRICK	B-6806x42
P	CHILDREN'S CIRCULAR MIRROR, 18" DIA	N/A	N/A
Q	FULL LENGTH MIRROR - 24"W X 60"H	N/A	N/A
R1	MIRROR, 72" x 30"	N/A	N/A
R2	MIRROR 18"W X 30"H	N/A	N/A
V	HORIZONTAL WALL MOUNT BABY CHANGING STATION	KOALA KARE	KB-100-0
W	STAINLESS STEEL DOUBLE ROBE HOOK	BOBRICK	B-76727
X1	12 GALLON ALUMINUM WASTE RECEPTACLE	RUBBERMAID	FGAOT15SAPL
X2	STAINLESS STEEL CIRCULAR WASTE CHUTE FOR MOUNTING IN COUNTERTOP	BOBRICK	B-529
Y	ROLL PAPER TOWEL DISPENSER	BOBRICK	B-253
Z	EXTRA VINYL TODDLER CHANGING TABLE PAD 23" x 41.5" x 1"	LAKESHORE	AP303

Division of the State Architect
APPROVED
DIV. OF THE STATE ARCHITECT
APP: 02-119316 INC:
REVIEWED FOR
SS☐ FLS☐ ACS☑
DATE: 03/24/2022

Office of the State Fire Marshal
OFFICE OF THE STATE FIRE MARSHAL
APPROVED FIRE AND PANIC ONLY
03/14/22
21-0498
Approval of this plan does not authorize or approve any omission or deviation from applicable requirements. Final approval is subject to field inspection. One set of approved plans shall be available on the project site at all times.

CSUS CHILD DEVELOPMENT CENTER

CALIFORNIA STATE
UNIVERSITY, STANISLAUS
ONE UNIVERSITY CIRCLE
TURLOCK, CA 95382

ehdd.

PIER 1, BAY 2
THE EMBARCADERO
SAN FRANCISCO, CA 94111

INFO@EHDD.COM
+1 415-285-9193

Consultant

Stamp

Printing	Date
95% CONSTRUCTION DOCUMENTS	06.25.2021
PERMIT SET	08.16.2021
PERMIT SET - DSA V2	12.15.2021
PERMIT SET - SFM	12.21.2021

Revisions and Description	Date

Scale
As indicated

Drawn by
Author

EHDD Job Number
20020

Sheet Title
ENLARGED CHANGING PLANS AND ELEVATIONS

Sheet Number
A4.04 V3

C:\Users\ quinones\OneDrive - EHDD\Documents\20020-A-CSU STANISLAUS CDC- CENTRAL_ quinones.rvt

12/10/2021 9:32:45 AM

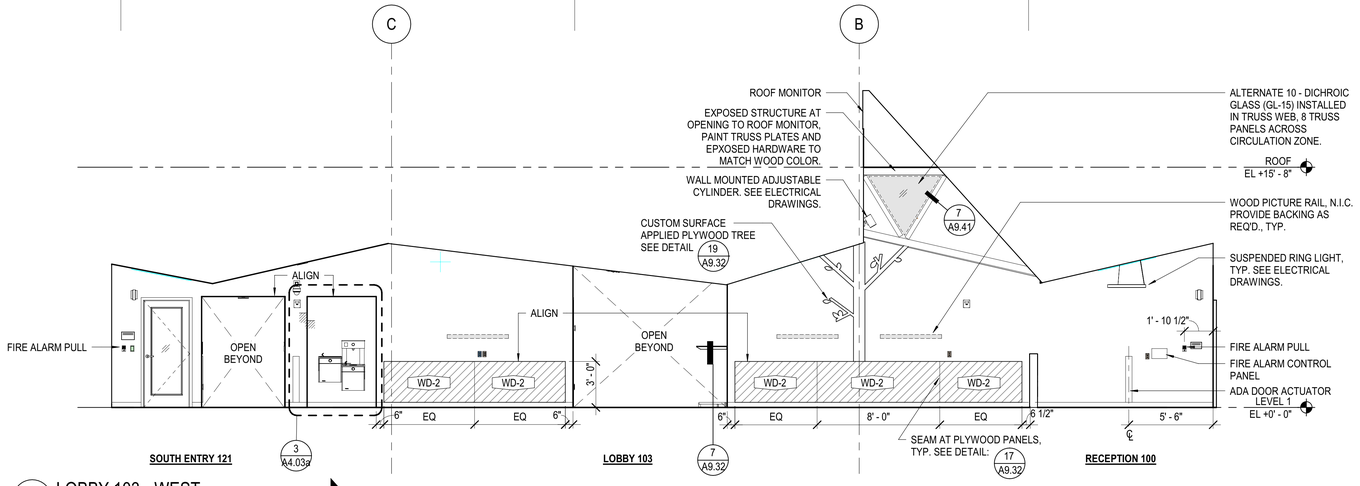

4 A5.01 LOBBY 103 - WEST
SCALE: 1/4" = 1'-0"

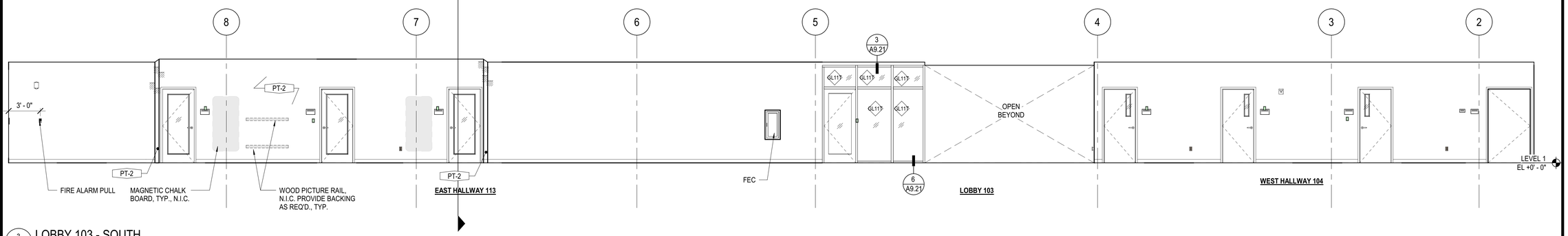

3 A5.01 LOBBY 103 - SOUTH
SCALE: 1/4" = 1'-0"

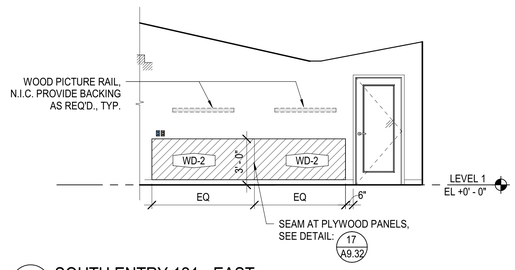

2a A5.01 SOUTH ENTRY 121 - EAST
SCALE: 1/4" = 1'-0"

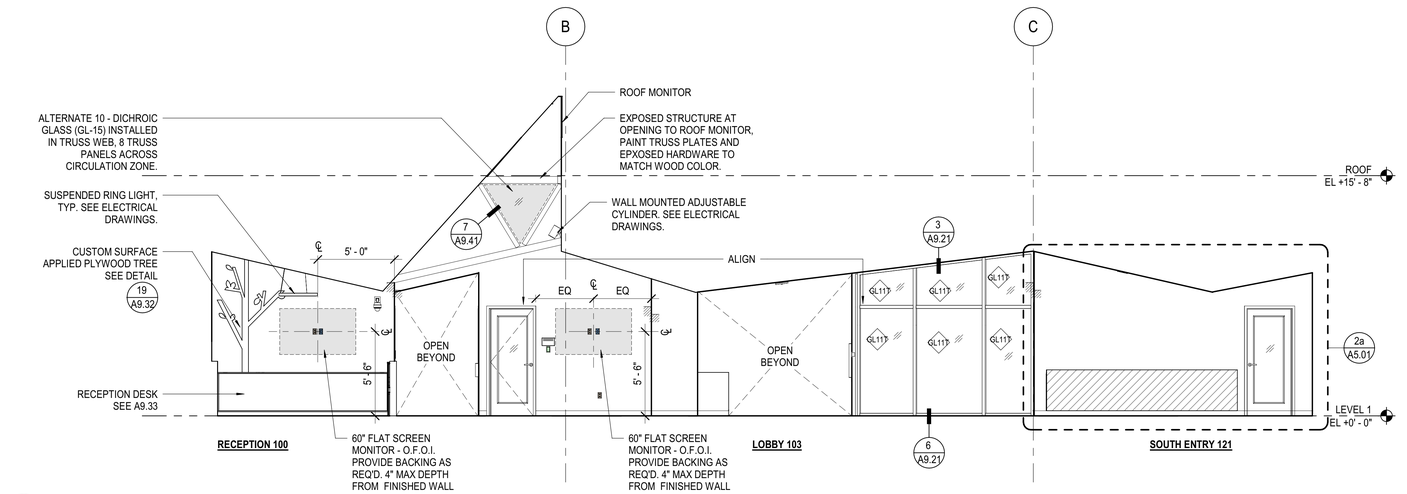

2 A5.01 LOBBY 103 - EAST
SCALE: 1/4" = 1'-0"

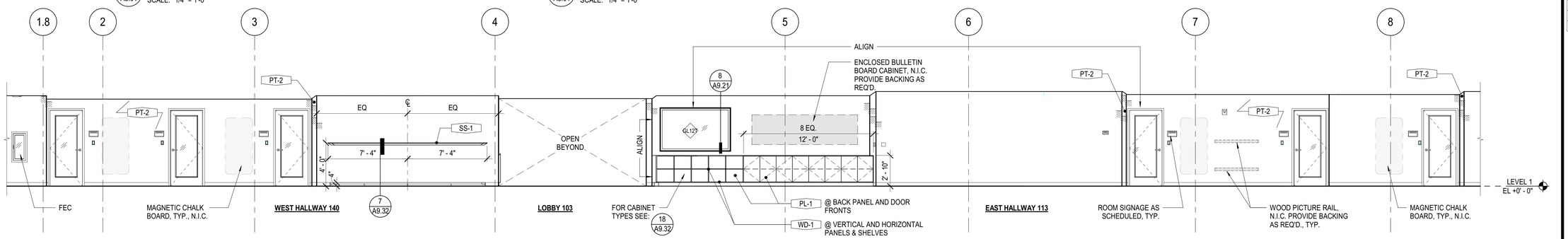

1 A5.01 LOBBY 103 - NORTH
SCALE: 1/4" = 1'-0"

ELEVATION NOTES & LEGEND

1. SEE A0.31 DOOR SCHEDULE FOR SIZES AND DETAIL REFERENCES.
2. SEE A2.21 FOR SIGNAGE REFERENCES.
3. SEE A8.11 FOR TYPICAL CEMENT PLASTER ASSEMBLY DETAILS

G# G#T GLASS TYPE, 'T' DENOTES TEMPERED GLASS, SEE SPEC SECTION 08 80 00

Division of the State Architect

APPROVED
DIV. OF THE STATE ARCHITECT
APP: 02-119316 INC:
REVIEWED FOR
SS☐ FLS☐ ACS☑
DATE: 03/24/2022

Office of the State Fire Marshal

OFFICE OF THE STATE FIRE MARSHAL
APPROVED FIRE AND PANIC ONLY
03/14/22
21-0498
Approval of this plan does not authorize or approve any omission or deviation from applicable regulations. Final approval is subject to field inspection. One set of approved plans shall be available on the project site at all times.

CSUS CHILD DEVELOPMENT CENTER

CALIFORNIA STATE UNIVERSITY, STANISLAUS
ONE UNIVERSITY CIRCLE
TURLOCK, CA 95382

ehdd.

PIER 1, BAY 2
THE EMBARCADERO
SAN FRANCISCO, CA 94111

INFO@EHDD.COM
+1 415-285-9193

Consultant

Stamp

LICENSED ARCHITECT
JENNIFER K. DEVORE
No. C-27347
Ren. 5-31-23
STATE OF CALIFORNIA

Printing	Date
95% CONSTRUCTION DOCUMENTS	06.25.2021
PERMIT SET	08.16.2021
PERMIT SET - DSA V2	12.15.2021
PERMIT SET - SFM	12.21.2021

Revisions and Description	Date

Scale
As indicated

Drawn by
Author

EHDD Job Number
20020

Sheet Title
INTERIOR ELEVATIONS

Sheet Number
A5.01 V3

C:\Users\ jquinones\OneDrive - EHDD\Documents\20020-A-CSU STANISLAUS CDC- CENTRAL_ jquinones.rvt

12/10/2021 9:34:26 AM

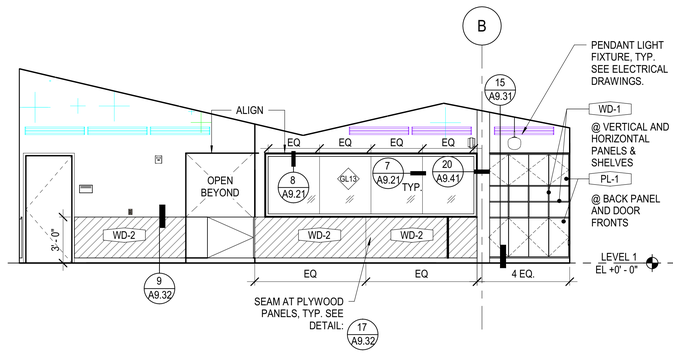

12 A5.02 INFANT CLASS A 135 - EAST (INFANT CLASS B 139 SIM.)
SCALE: 1/4" = 1'-0"

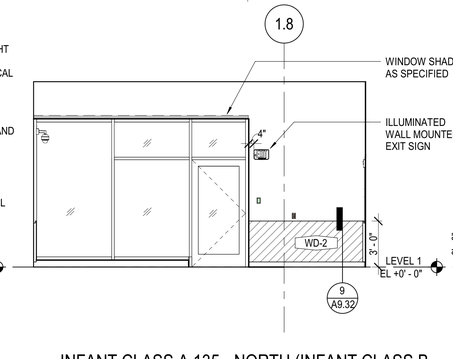

11 A5.02 INFANT CLASS A 135 - NORTH (INFANT CLASS B 139 SIM.)
SCALE: 1/4" = 1'-0"

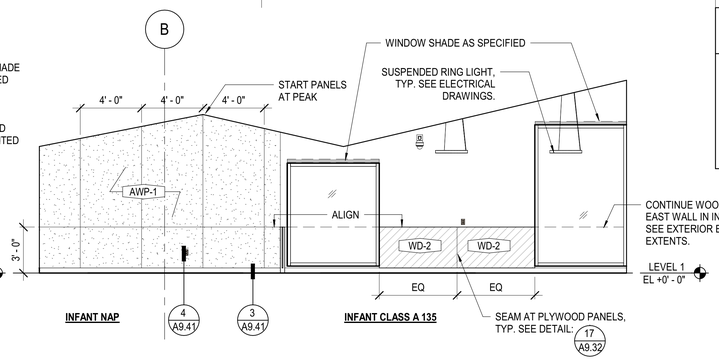

10 A5.02 INFANT CLASS A 135 - WEST (INFANT CLASS B 139 SIM.)
SCALE: 1/4" = 1'-0"

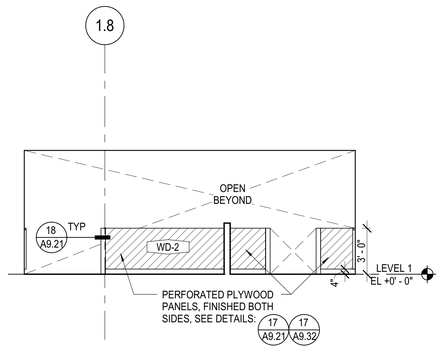

9 A5.02 INFANT CLASS A 135 - SOUTH (INFANT CLASS B 139 SIM.)
SCALE: 1/4" = 1'-0"

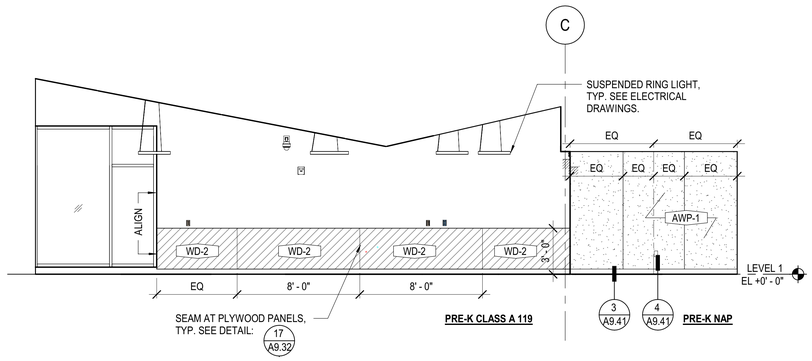

8 A5.02 PRE-K CLASS A - WEST (PRE-K CLASS B 115 SIM.)
SCALE: 1/4" = 1'-0"

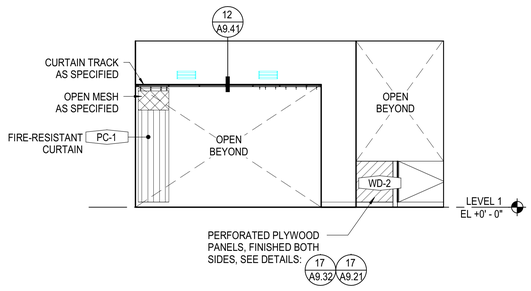

7 A5.02 PRE-K CLASS A 119 - NORTH (PRE-K CLASS B 115 SIM.)
SCALE: 1/4" = 1'-0"

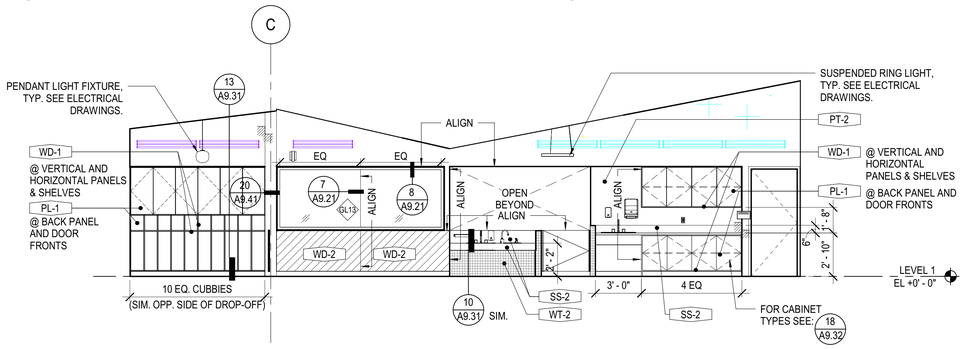

6 A5.02 PRE-K CLASS A 119 - EAST (PRE-K CLASS B 115 SIM.)
SCALE: 1/4" = 1'-0"

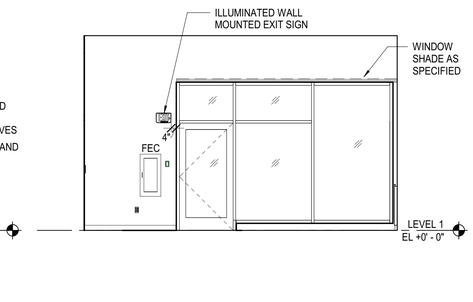

5 A5.02 PRE-K CLASS A 119 - SOUTH (PRE-K CLASS B 115 SIM.)
SCALE: 1/4" = 1'-0"

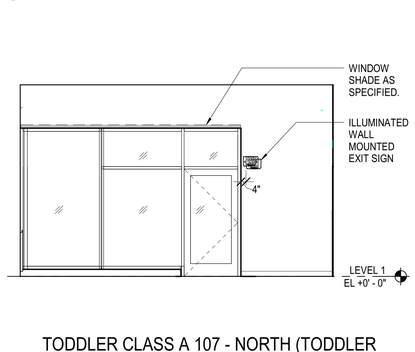

4 A5.02 TODDLER CLASS A 107 - NORTH (TODDLER CLASS B 111 SIM.)
SCALE: 1/4" = 1'-0"

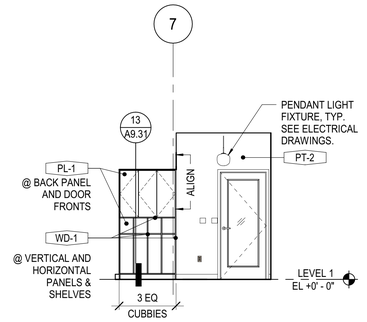

3a A5.02 DROP-OFF - SOUTH (DROP-OFF 111A SIM.)
SCALE: 1/4" = 1'-0"

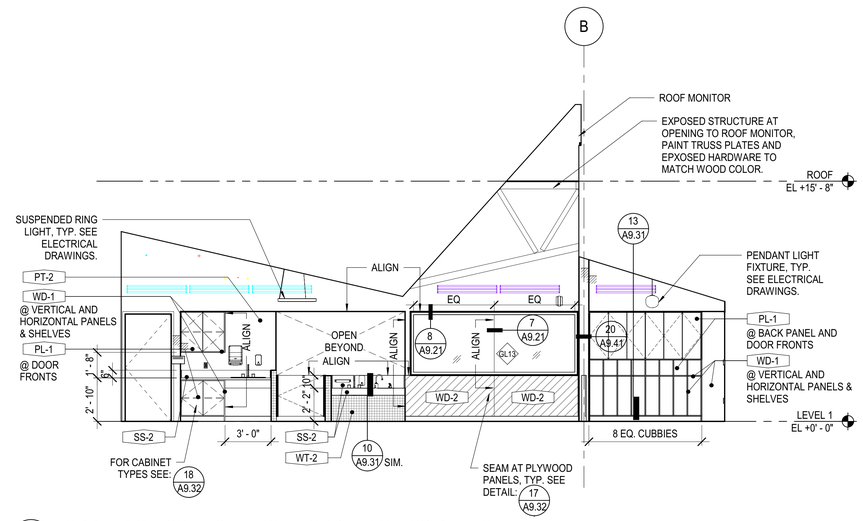

3 A5.02 TODDLER CLASS A 107 - EAST (TODDLER CLASS B 111 SIM.)
SCALE: 1/4" = 1'-0"

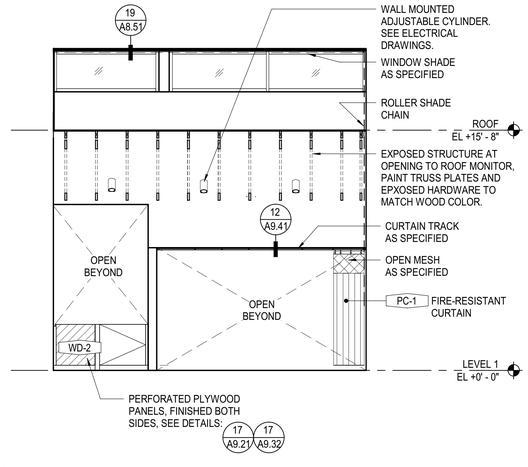

2 A5.02 TODDLER CLASS A 107 - SOUTH (TODDLER CLASS B 111 SIM.)
SCALE: 1/4" = 1'-0"

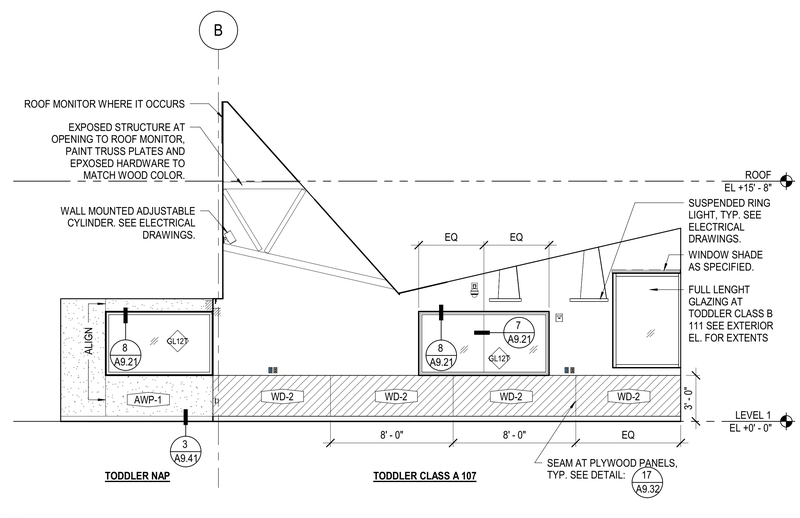

1 A5.02 TODDLER CLASS A 107- WEST (TODDLER CLASS B 111 SIM.)
SCALE: 1/4" = 1'-0"

ELEVATION NOTES & LEGEND

1. SEE A0.31 DOOR SCHEDULE FOR SIZES AND DETAIL REFERENCES.
2. SEE A2.21 FOR SIGNAGE REFERENCES.
3. SEE A8.11 FOR TYPICAL CEMENT PLASTER ASSEMBLY DETAILS

G# G#T GLASS TYPE, 'T' DENOTES TEMPERED GLASS, SEE SPEC SECTION 08 80 00

Division of the State Architect

APPROVED
DIV. OF THE STATE ARCHITECT
APP: 02-119316 INC:
REVIEWED FOR
SS☐ FLS☐ ACS☑
DATE: 03/24/2022

Office of the State Fire Marshal

OFFICE OF THE STATE FIRE MARSHAL
APPROVED FIRE AND PANIC ONLY
03/14/22
21-0498
Approval of this plan does not authorize or approve any omission or deviation from applicable regulations. Final approval is subject to field inspection. One set of approved plans shall be available on the project site at all times.

CSUS CHILD DEVELOPMENT CENTER

CALIFORNIA STATE UNIVERSITY, STANISLAUS
ONE UNIVERSITY CIRCLE
TURLOCK, CA 95382

ehdd.

PIER 1, BAY 2
THE EMBARCADERO
SAN FRANCISCO, CA 94111

INFO@EHDD.COM
+1 415-285-9193

Consultant

Stamp

LICENSED ARCHITECT
JENNIFER K. DEVINE
Ren. 5-31-23
STATE OF CALIFORNIA

Printing	Date
95% CONSTRUCTION DOCUMENTS	06.25.2021
PERMIT SET	08.16.2021
PERMIT SET - DSA V2	12.15.2021
PERMIT SET - SFM	12.21.2021

Revisions and Description	Date

Scale
As indicated

Drawn by
Author

EHDD Job Number
20020

Sheet Title
INTERIOR ELEVATIONS

Sheet Number
A5.02 V3

C:\Users\ quinones\OneDrive - EHDD\Documents\20020-A-CSU STANISLAUS CDC- CENTRAL_ quinones.rvt

12/10/2021 9:33:06 AM

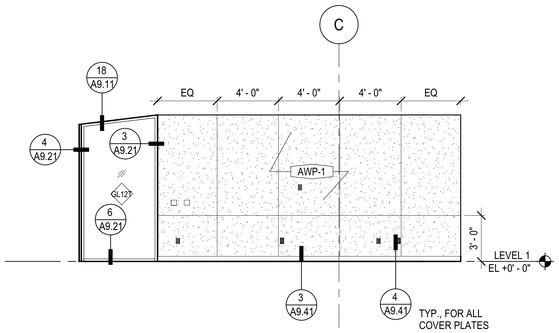

18 A5.03 MEETING ROOM 134 - EAST
SCALE: 1/4" = 1'-0"

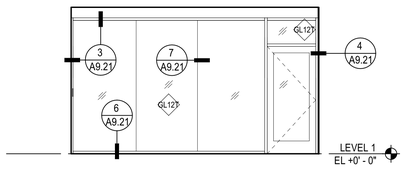

17 A5.03 MEETING ROOM 134 - NORTH
SCALE: 1/4" = 1'-0"

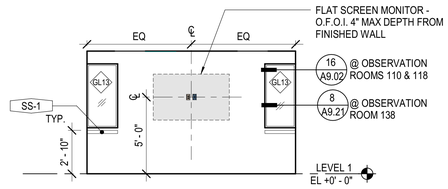

16 A5.03 TYPICAL DISPLAY WALL AT OBSERVATION ROOM
SCALE: 1/4" = 1'-0"

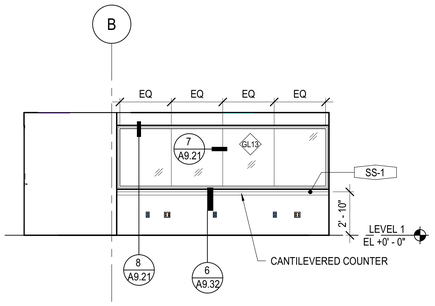

15 A5.03 TYPICAL COUNTER AT OBSERVATION ROOM
SCALE: 1/4" = 1'-0"

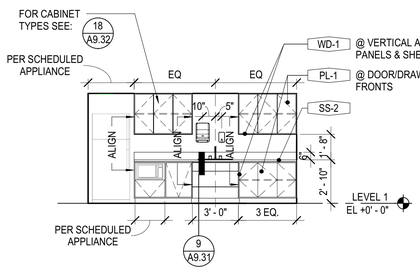

14 A5.03 KITCHENETTE 137 - NORTH
SCALE: 1/4" = 1'-0"

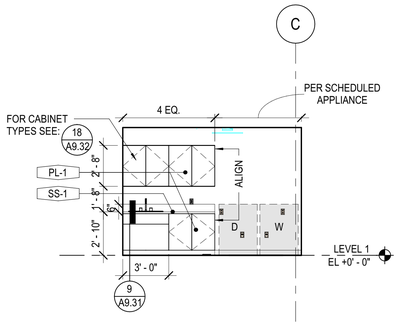

13 A5.03 STORAGE/LAUNDRY 129 - EAST
SCALE: 1/4" = 1'-0"

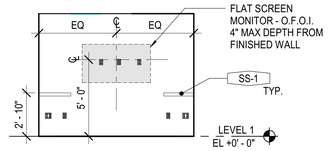

12 A5.03 OBSERVATION 127 - SOUTH
SCALE: 1/4" = 1'-0"

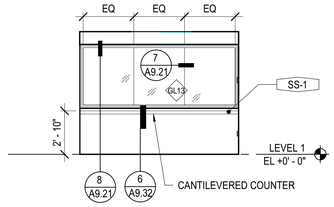

11 A5.03 OBSERVATION 127 - EAST (WEST SIM.)
SCALE: 1/4" = 1'-0"

ELEVATION NOTES & LEGEND

1. SEE A0.31 DOOR SCHEDULE FOR SIZES AND DETAIL REFERENCES.
2. SEE A2.21 FOR SIGNAGE REFERENCES.
3. SEE A8.11 FOR TYPICAL CEMENT PLASTER ASSEMBLY DETAILS

G# G#T GLASS TYPE, 'T' DENOTES TEMPERED GLASS, SEE SPEC SECTION 08 80 00

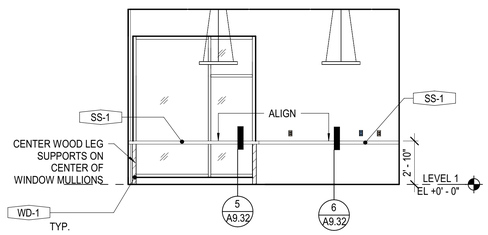

10 A5.03 STAFF ROOM 122 - SOUTH
SCALE: 1/4" = 1'-0"

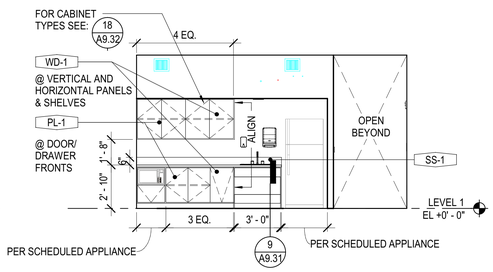

9 A5.03 STAFF ROOM 122 - NORTH
SCALE: 1/4" = 1'-0"

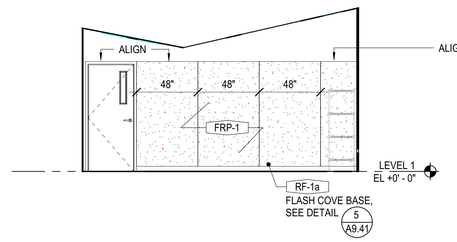

7 A5.03 PANTRY 120A - WEST
SCALE: 1/4" = 1'-0"

NOTE:
SEE FOOD SERVICE DRAWINGS, QF SERIES, FOR STAFF
KITCHEN 120 & PANTRY 120A FIXTURES AND EQUIPMENT.

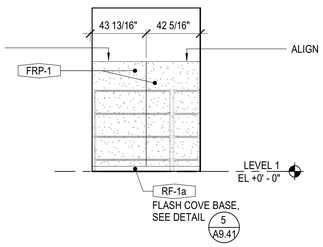

6 A5.03 PANTRY 120A - NORTH
SCALE: 1/4" = 1'-0"

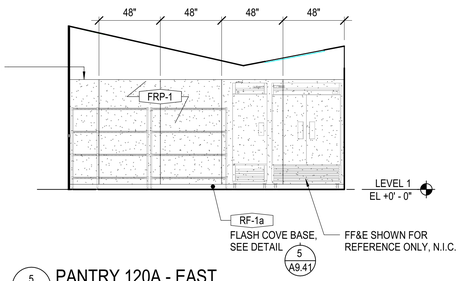

5 A5.03 PANTRY 120A - EAST
SCALE: 1/4" = 1'-0"

NOTE:
SEE FOOD SERVICE DRAWINGS, QF SERIES, FOR STAFF
KITCHEN 120 & PANTRY 120A FIXTURES AND EQUIPMENT.

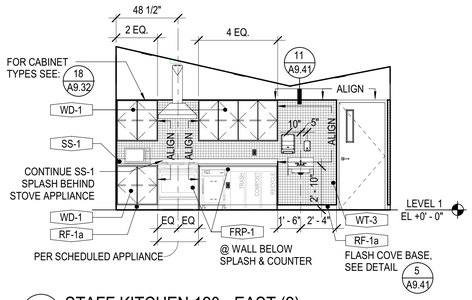

4 A5.03 STAFF KITCHEN 120 - EAST (2)
SCALE: 1/4" = 1'-0"

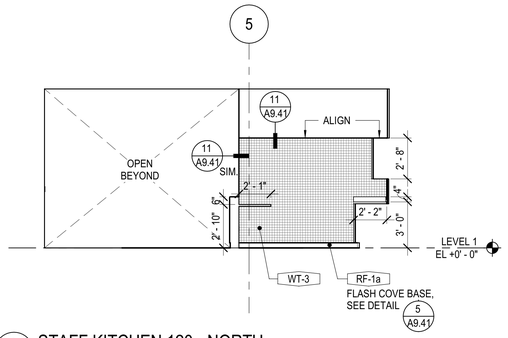

3 A5.03 STAFF KITCHEN 120 - NORTH
SCALE: 1/4" = 1'-0"

NOTE:
SEE FOOD SERVICE DRAWINGS, QF SERIES, FOR STAFF
KITCHEN 120 & PANTRY 120A FIXTURES AND EQUIPMENT.

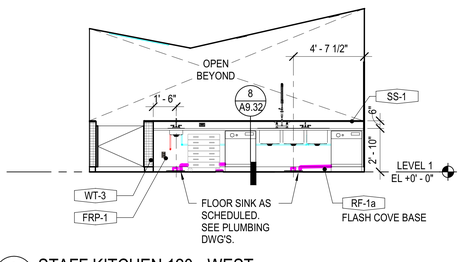

2 A5.03 STAFF KITCHEN 120 - WEST
SCALE: 1/4" = 1'-0"

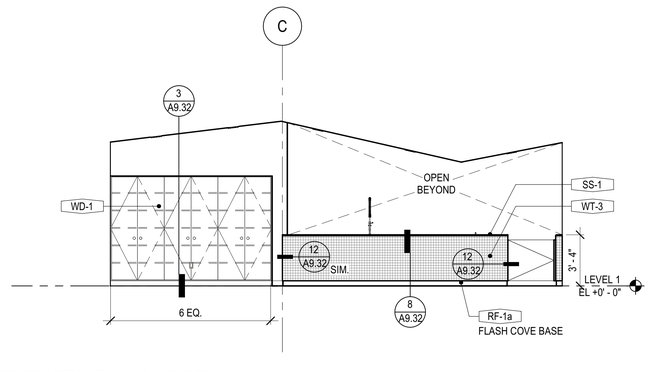

1 A5.03 STAFF KITCHEN 120 - EAST
SCALE: 1/4" = 1'-0"

C:\Users\l.quinones\OneDrive - EHDD\Documents\20020-A-CSU STANISLAUS CDC- CENTRAL_l.quinones.rvt

Division of the State Architect
APPROVED
DIV. OF THE STATE ARCHITECT
APP: 02-119316 INC:
REVIEWED FOR
SS☐ FLS☐ ACS☑
DATE: 03/24/2022

Office of the State Fire Marshal
OFFICE OF THE STATE FIRE MARSHAL
APPROVED FIRE AND PANIC ONLY
03/14/22
21-0498
Approval of this plan does not authorize or approve any omission or deviation from applicable regulations. Final approval is subject to field inspection. One set of approved plans shall be available on the project site at all times.

CSUS CHILD DEVELOPMENT CENTER
CALIFORNIA STATE
UNIVERSITY, STANISLAUS
ONE UNIVERSITY CIRCLE
TURLOCK, CA 95382

ehdd.

PIER 1, BAY 2
THE EMBARCADERO
SAN FRANCISCO, CA 94111

INFO@EHDD.COM
+1 415-285-9193

Consultant

Stamp

Printing	Date
95% CONSTRUCTION DOCUMENTS	06.25.2021
PERMIT SET	08.16.2021
PERMIT SET - DSA V2	12.15.2021
PERMIT SET - SFM	12.21.2021

Revisions and Description	Date

Scale
As indicated

Drawn by
Author

EHDD Job Number
20020

Sheet Title
INTERIOR ELEVATIONS

Sheet Number
A5.03 V3

12/14/2021 6:06:17 PM

1 A6.01 REFLECTED CEILING PLAN
SCALE: 1/8" = 1'-0"

REFLECTED CEILING PLAN SHEET NOTES

1. SEE A6.11 & A6.12 FOR EXTERIOR SOFFIT INFO
2. FOR GENERAL NOTES APPLICABLE TO ALL DRAWINGS REFER TO THE "PROJECT GENERAL NOTES".
3. REFER TO SHEET A9.11 FOR TYPICAL CEILING NOTES AND DETAILS.
4. SEE ELECTRICAL DRAWINGS FOR LIGHT FIXTURE SCHEDULE.
5. CENTER CEILING TILES WITHIN ROOMS AS SHOWN.
6. WINDOW SHADES, WIN-1, AT ROOF MONITOR IN DIR. 104, OFFICE 105 & TODDLER CLASS A 107
7. CENTER RECESSED DOWN LIGHTS, SMOKE DETECTORS, SPRINKLERS AND DIFFUSERS W/IN WOOD PLANK, TYP. WHERE WOOD CEILING OCCURS.

REFLECTED CEILING PLAN LEGEND

- LINEAR PLANK WOOD CEILING
- ACT - 1 2'X4'
- ACT - 2 2'X4'
- ACP - 1 DIRECT ATTACHED PET PANEL CEILING
- GYPSUM BOARD CEILING
- WINDOW SHADE, WIN-1 SEE A8 SHEETS FOR MOUNTING TYPES
- ℄ WDT — CENTERLINE BETWEEN WOOD TRUSSES
- +12'-8" — HEIGHT OF CEILING FINISH ABOVE FINISH FLOOR
- SLOPE DOWN
- RECESSED 2X4
- RECESSED 2X2
- RECESSED DOWNLIGHT
- CIRCULAR SURFACE MOUNTED LIGHT
- PENDANT LIGHT
- PENDANT RING LIGHT
- SURFACE MOUNTED CYLINDER
- SURFACE MOUNTED OR SUSPENDED LINEAR
- UNDERCABINET LIGHT
- AIR SUPPLY, SIZE AS SCHEDULED, SEE MECH.
- AIR RETURN, SIZE AS SCHEDULED, SEE MECH.
- AIR EXHAUST, SIZE AS SCHEDULED, SEE MECH.
- LINEAR DIFFUSER, SIZE AS SCHEDULED, SEE MECH.
- SMOKE ALARM
- PANORAMIC SURVEILLANCE CAMERA
- SURVEILANCE CAMERA
- STROBE
- STROBE W/ SPEAKER
- SPRINKLER, SPACED NO MORE THAN 15' APART, SEE FP DRAWINGS
- ILLUMINATED EXIT SIGN

Division of the State Architect

APPROVED
DIV. OF THE STATE ARCHITECT
APP: 02-119316 INC:
REVIEWED FOR
SS☐ FLS☐ ACS☑
DATE: 03/24/2022

Office of the State Fire Marshal

OFFICE OF THE STATE FIRE MARSHAL APPROVED FIRE AND PANIC ONLY
03/14/22
21-0498
Approval of this plan does not authorize or approve any omission or deviation from applicable requirements. Final approval is subject to field inspection. One set of approved plans shall be available on the project site at all times.

CSUS CHILD DEVELOPMENT CENTER
CALIFORNIA STATE UNIVERSITY, STANISLAUS
ONE UNIVERSITY CIRCLE
TURLOCK, CA 95382

ehdd.

PIER 1, BAY 2
THE EMBARCADERO
SAN FRANCISCO, CA 94111

INFO@EHDD.COM
+1 415-285-9193

Consultant

Stamp

LICENSED ARCHITECT
JENNIFER K DEVLIN
No. C-31423
Ren. 5-31-23
STATE OF CALIFORNIA

Printing	Date
95% CONSTRUCTION DOCUMENTS	06.25.2021
PERMIT SET	08.16.2021
PERMIT SET - DSA V2	12.15.2021
PERMIT SET - SFM	12.21.2021

Revisions and Description	Date

Scale
1/8" = 1'-0"

Drawn by
Author

EHDD Job Number
20020

Sheet Title
REFLECTED CEILING PLAN

Sheet Number
A6.01 V3

C:\Users\quinones\OneDrive - EHDD\Documents\20020-A-CSU STANISLAUS CDC- CENTRAL_quinones.rvt

12/13/2021 12:44:13 PM

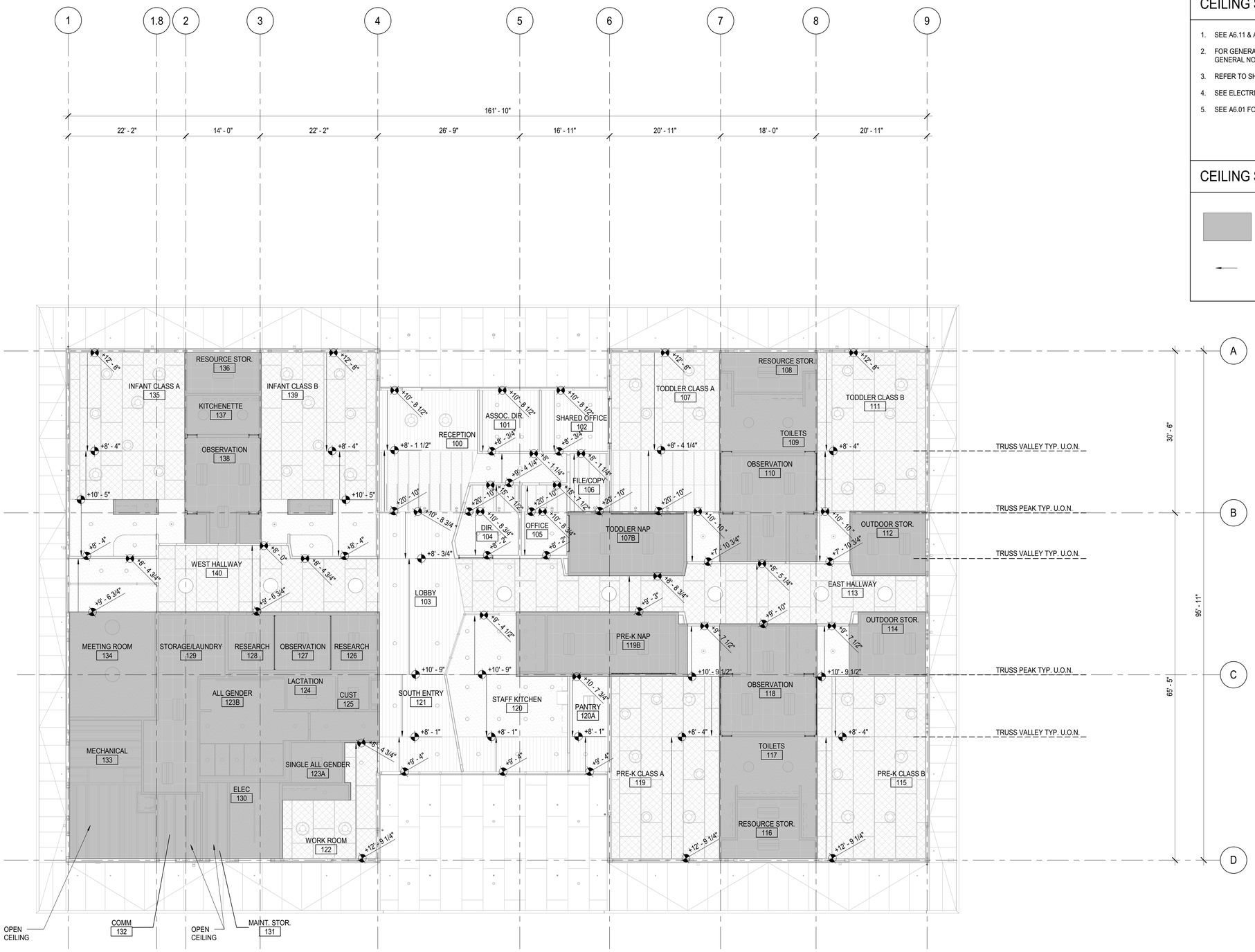

NOTE:
THIS DRAWING IS FOR THE PURPOSE OF SLOPE DIAGRAMMING. ELEVATIONS SHOWN ARE ROUNDED TO ¼" FOR GENERAL COORDINATION ONLY. SEE A3.1x & S3.1x SERIES DRAWINGS FOR TRUSS GEOMETRY, AND SEE A6.01 FOR ASSOCIATED DETAILS AT CEILING TRANSITIONS.

10.0° TO TRUE NORTH

8' 0' 8' 16'

1 / A6.02 REFLECTED CEILING PLAN - CEILING SLOPES DIAGRAM
SCALE: 1/8" = 1'-0"

CEILING SLOPES DIAGRAM NOTES

1. SEE A6.11 & A6.12 FOR EXTERIOR SOFFIT INFO
2. FOR GENERAL NOTES APPLICABLE TO ALL DRAWINGS REFER TO THE "PROJECT GENERAL NOTES".
3. REFER TO SHEET A9.11 FOR TYPICAL CEILING NOTES AND DETAILS.
4. SEE ELECTRICAL DRAWINGS FOR LIGHT FIXTURE SCHEDULE.
5. SEE A6.01 FOR CEILING FIXTURES AND LOCATIONS.

CEILING SLOPES DIAGRAM LEGEND

FLAT CEILING SEE A6.01 FOR CEILING HEIGHTS

SLOPE DOWN

Division of the State Architect

APPROVED
DIV. OF THE STATE ARCHITECT
APP: 02-119316 INC:
REVIEWED FOR
SS☐ FLS☐ ACS☑
DATE: 03/24/2022

Office of the State Fire Marshal

OFFICE OF THE STATE FIRE MARSHAL APPROVED FIRE AND PANIC ONLY
03/14/22
21-0498
Approval of this plan does not authorize or approve any omission or deviation from applicable regulations. Final approval is subject to field inspection. One set of approved plans shall be available on the project site at all times.

CSUS CHILD DEVELOPMENT CENTER

CALIFORNIA STATE UNIVERSITY, STANISLAUS
ONE UNIVERSITY CIRCLE
TURLOCK, CA 95382

ehdd.

PIER 1, BAY 2
THE EMBARCADERO
SAN FRANCISCO, CA 94111

INFO@EHDD.COM
+1 415-285-9193

Consultant

Stamp

LICENSED ARCHITECT
JENNIFER K DEVLIN
No. C-27394
Ren. 5-31-23
STATE OF CALIFORNIA

Printing	Date
95% CONSTRUCTION DOCUMENTS	06.25.2021
PERMIT SET	08.16.2021
PERMIT SET - DSA V2	12.15.2021
PERMIT SET - SFM	12.21.2021

Revisions and Description	Date

Scale
1/8" = 1'-0"

Drawn by
Author

EHDD Job Number
20020

Sheet Title
CEILING SLOPES DIAGRAM

Sheet Number
A6.02 V3

C:\Users\l.quinones\OneDrive - EHDD\Documents\20020-A-CSU STANISLAUS CDC- CENTRAL_l.quinones.rvt

12/13/2021 12:17:19 PM

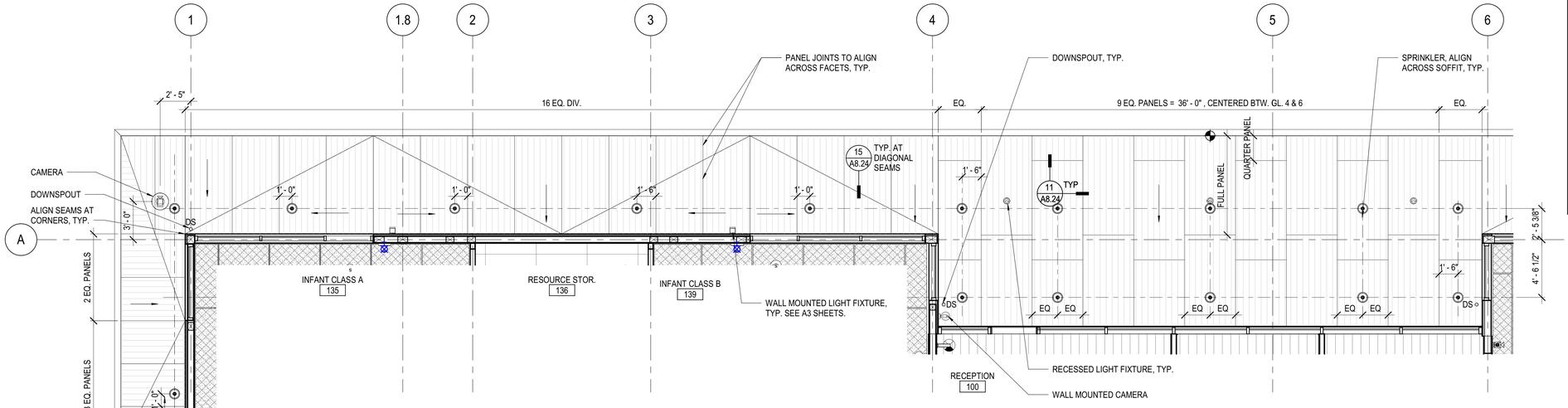

2 A6.11 ENLARGED RCP - EXTERIOR SOFFIT NORTHWEST CORNER

SCALE: 1/4" = 1'-0"

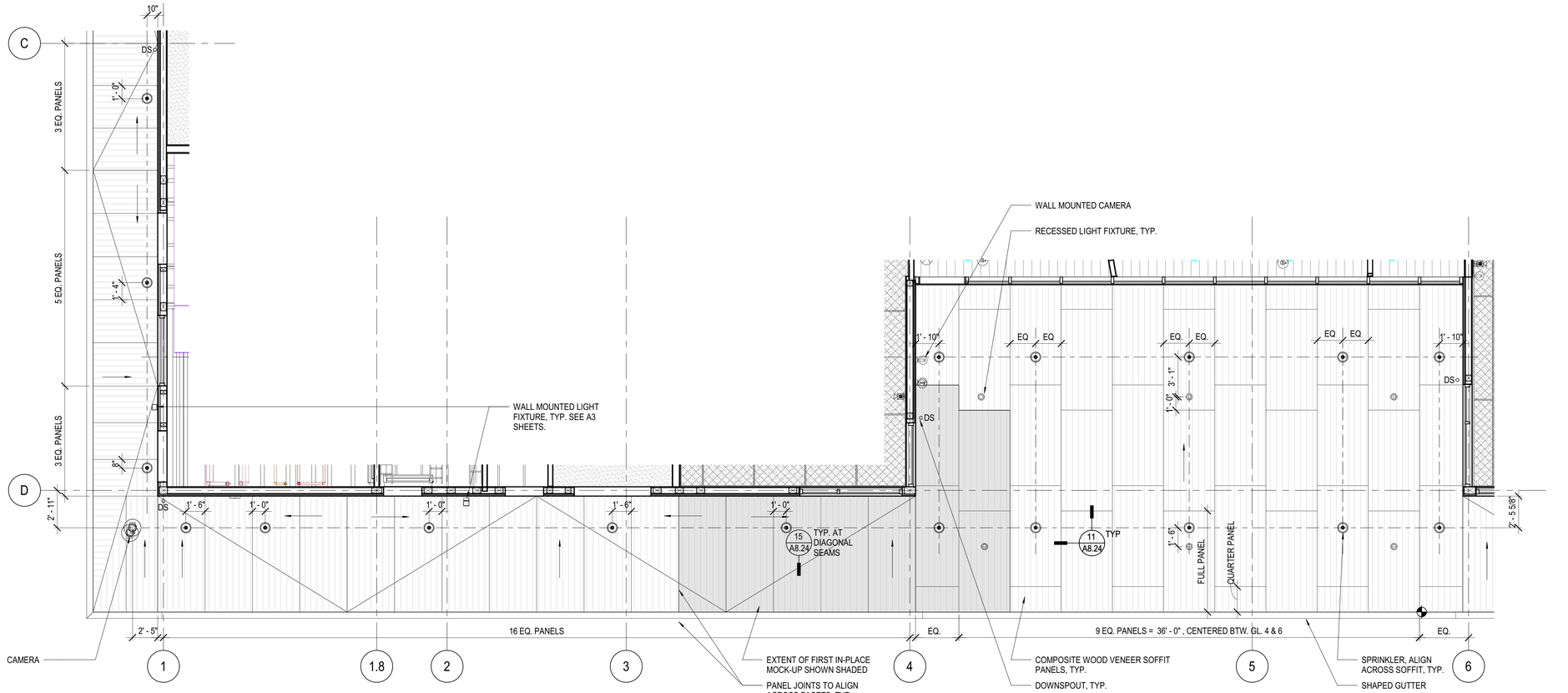

1 A6.11 ENLARGED RCP - EXTERIOR SOFFIT SOUTHWEST CORNER

SCALE: 1/4" = 1'-0"

REFLECTED CEILING PLAN NOTES

- COMPOSITE WOOD VENEER PANEL, HATCH LINES INDICATE GRAIN ORIENTATION. SEE A3.X SERIES TO DETERMINE HEIGHTS AND ANGLES OF SOFFIT.
- WORKPOINT
- DS — DOWNSPOUT
- RECESSED DOWNLIGHT
- SPRINKLER, SPACED NO MORE THAN 15' APART, SEE FP DRAWINGS
- SLOPE DOWN, SEE A3 SERIES FOR GEOMETRY

Division of the State Architect

APPROVED
DIV. OF THE STATE ARCHITECT
APP: 02-119316 INC:
REVIEWED FOR
SS☐ FLS☐ ACS☑
DATE: 03/24/2022

Office of the State Fire Marshal

OFFICE OF THE STATE FIRE MARSHAL APPROVED FIRE AND PANIC ONLY

03/14/22
21-0498

Approval of this plan does not authorize or approve any omission or deviation from applicable requirements. Final approval is subject to field inspection. One set of approved plans shall be available on the project site at all times.

CSUS CHILD DEVELOPMENT CENTER

CALIFORNIA STATE UNIVERSITY, STANISLAUS
ONE UNIVERSITY CIRCLE
TURLOCK, CA 95382

ehdd.

PIER 1, BAY 2
THE EMBARCADERO
SAN FRANCISCO, CA 94111

INFO@EHDD.COM
+1 415-285-9193

Consultant

Stamp

LICENSED ARCHITECT
JENNIFER K DEVITT
No. C-27934
Ren. 5-31-23
STATE OF CALIFORNIA

Printing	Date
95% CONSTRUCTION DOCUMENTS	06.25.2021
PERMIT SET	08.16.2021
PERMIT SET - DSA V2	12.15.2021
PERMIT SET - SFM	12.21.2021

Revisions and Description	Date

Scale
As indicated

Drawn by
Author

EHDD Job Number
20020

Sheet Title
ENLARGED REFLECTED CEILING PLAN - EXTERIOR SOFFITS

Sheet Number
A6.11 V3

C:\Users\s.sanchez\Documents\20020-A-CSU STANISLAUS CDC- CENTRAL_ehdd-sjling.rvt

12/13/2021 12:17:20 PM

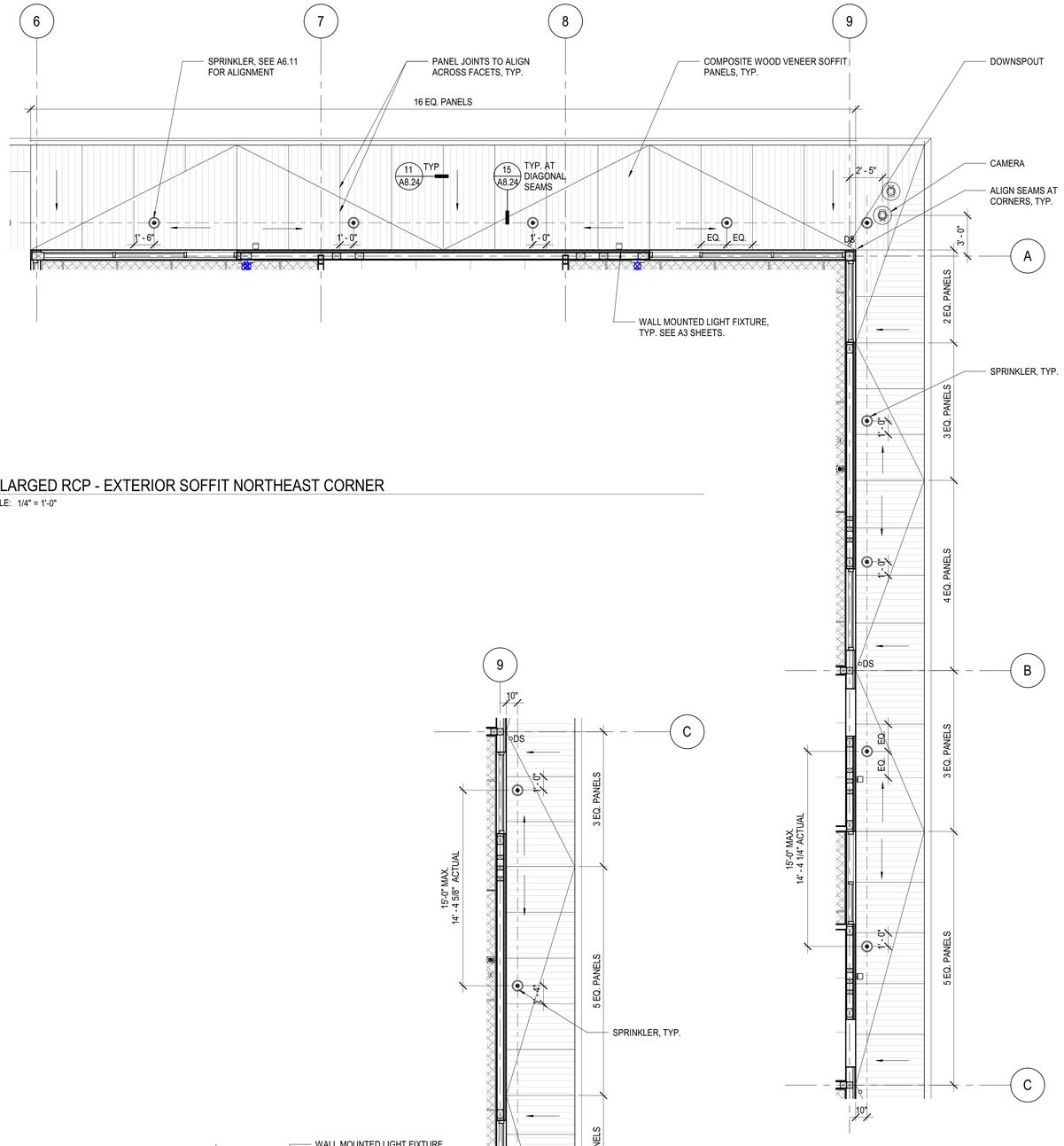

3 A6.12 ENLARGED RCP - EXTERIOR SOFFIT NORTHEAST CORNER

SCALE: 1/4" = 1'-0"

1 A6.12 ENLARGED RCP - EXTERIOR SOFFIT SOUTHEAST CORNER

SCALE: 1/4" = 1'-0"

REFLECTED CEILING PLAN NOTES

- COMPOSITE WOOD VENEER PANEL, HATCH LINES INDICATE GRAIN ORIENTATION. SEE A3.X SERIES TO DETERMINE HEIGHTS AND ANGLES OF SOFFIT.
- WORKPOINT
- DS — DOWNSPOUT
- RECESSED DOWNLIGHT
- SPRINKLER, SPACED NO MORE THAN 15' APART, SEE FP DRAWINGS
- SLOPE DOWN, SEE A3 SERIES FOR GEOMETRY

10.0° TO TRUE NORTH

4' 0' 4' 8'

Division of the State Architect

APPROVED
DIV. OF THE STATE ARCHITECT
APP: 02-119316 INC:
REVIEWED FOR
SS ☐ FLS ☐ ACS ☑
DATE: 03/24/2022

Office of the State Fire Marshal

OFFICE OF THE STATE FIRE MARSHAL APPROVED FIRE AND PANIC ONLY

03/14/22
21-0498

Approval of this plan does not authorize or approve any omission or deviation from applicable requirements. Final approval is subject to field inspection. One set of approved plans shall be available on the project site at all times.

CSUS CHILD DEVELOPMENT CENTER

CALIFORNIA STATE UNIVERSITY, STANISLAUS
ONE UNIVERSITY CIRCLE
TURLOCK, CA 95382

ehdd.

PIER 1, BAY 2
THE EMBARCADERO
SAN FRANCISCO, CA 94111

INFO@EHDD.COM
+1 415-285-9193

Consultant

Stamp

LICENSED ARCHITECT
JENNIFER K DEVLIN
No. C-37847
Ren. 5-31-23
STATE OF CALIFORNIA

Printing	Date
95% CONSTRUCTION DOCUMENTS	06.25.2021
PERMIT SET	08.16.2021
PERMIT SET - DSA V2	12.15.2021
PERMIT SET - SFM	12.21.2021

Revisions and Description	Date

Scale
As indicated

Drawn by
Author

EHDD Job Number
20020

Sheet Title
ENLARGED REFLECTED CEILING PLAN - EXTERIOR SOFFITS

Sheet Number
A6.12 V3

C:\Users\s.sanchez\Documents\20020-A-CSU STANISLAUS CDC- CENTRAL_ehdd-sjling.rvt

12/13/2021 9:18:27 AM

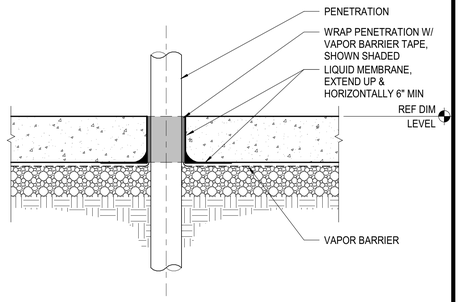

3 A8.01 TYP VAPOR BARRIER AT SLAB PENETRATION
SCALE: 1 1/2" = 1'-0"

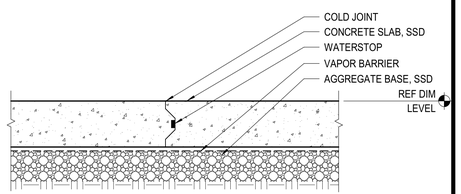

2 A8.01 TYP VAPOR BARRIER AT SLAB
SCALE: 1 1/2" = 1'-0"

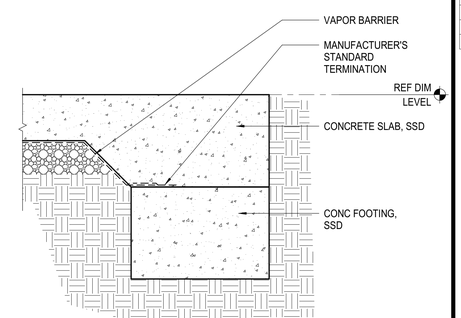

1 A8.01 TYP VAPOR BARRIER AT SLAB EDGE
NOT TO SCALE

Division of the State Architect
APPROVED
DIV. OF THE STATE ARCHITECT
APP: 02-119316 INC:
REVIEWED FOR
SS☐ FLS☐ ACS☑
DATE: 03/24/2022

Office of the State Fire Marshal
OFFICE OF THE STATE FIRE MARSHAL
APPROVED FIRE AND PANIC ONLY
03/14/22
21-0498
Approval of this plan does not authorize or approve any omission or deviation from applicable requirements. Final approval is subject to field inspection. One set of approved plans shall be available on the project site at all times.

CSUS CHILD DEVELOPMENT CENTER

CALIFORNIA STATE UNIVERSITY, STANISLAUS
ONE UNIVERSITY CIRCLE
TURLOCK, CA 95382

ehdd.

PIER 1, BAY 2
THE EMBARCADERO
SAN FRANCISCO, CA 94111

INFO@EHDD.COM
+1 415-285-9193

Consultant

Stamp

LICENSED ARCHITECT
JENNIFER K DEVLIN
No. C-27344
Ren. 5-31-23
STATE OF CALIFORNIA

Printing	Date
95% CONSTRUCTION DOCUMENTS	06.25.2021
PERMIT SET	08.16.2021
PERMIT SET - DSA V2	12.15.2021
PERMIT SET - SFM	12.21.2021

Revisions and Description	Date

Scale
1 1/2" = 1'-0"

Drawn by
Author

EHDD Job Number
20020

Sheet Title
BELOW GRADE WATERPROOFING DETAILS

Sheet Number
A8.01 V3

C:\Users\s.sanchez\Documents\20020-A-CSU STANISLAUS CDC- CENTRAL_ehdd-sjjing.rvt

12/13/2021 11:49:23 AM

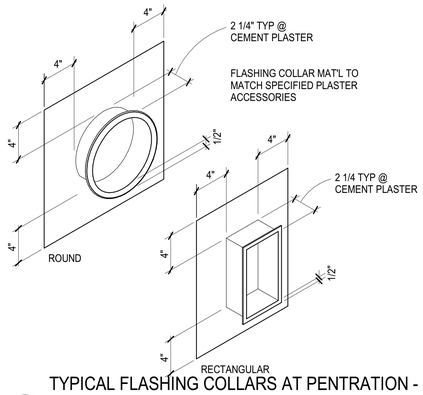

20 / A8.11 TYPICAL FLASHING COLLARS AT PENTRATION - ISOMETRIC
SCALE: 3" = 1'-0"

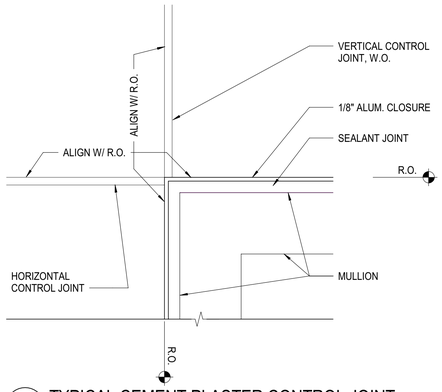

15 / A8.11 TYPICAL CEMENT PLASTER CONTROL JOINT
SCALE: 6" = 1'-0"

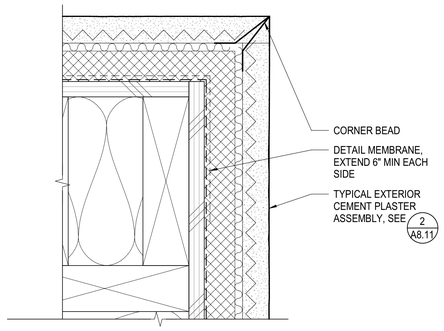

11 / A8.11 TYPICAL CEMENT PLASTER OUTSIDE CORNER - PLAN
SCALE: 6" = 1'-0"

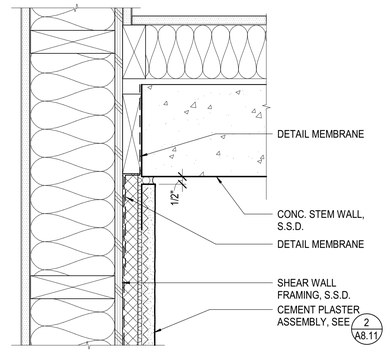

4 / A8.11 JAMB DETAIL - WW @ CEMENT PLASTER
SCALE: 3" = 1'-0"

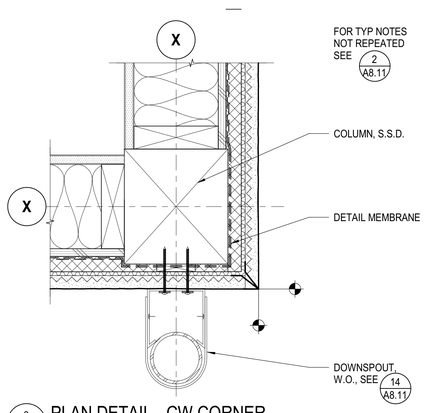

3 / A8.11 PLAN DETAIL - CW CORNER
SCALE: 3" = 1'-0"

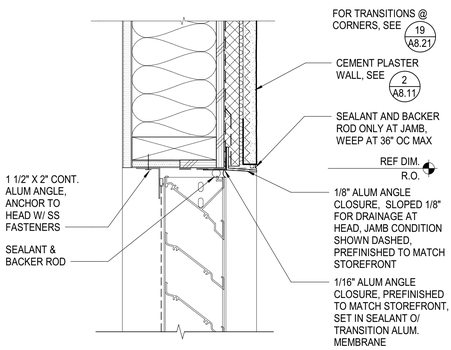

18 / A8.11 LOUVER HEAD (JAMB SIM.)
SCALE: 3" = 1'-0"

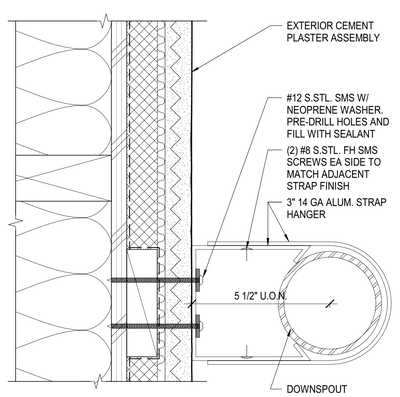

14 / A8.11 DOWNSPOUT HANGER AT CEMENT PLASTER - PLAN
SCALE: 6" = 1'-0"

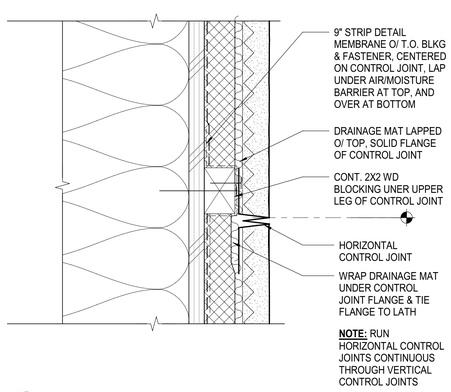

10 / A8.11 HORIZONTAL CEMENT PLASTER CONTROL JOINT
SCALE: 6" = 1'-0"

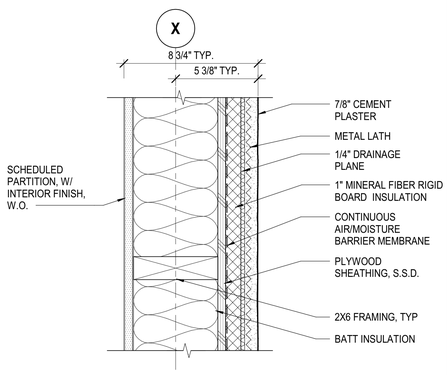

2 / A8.11 TYP CEMENT PLASTER WALL ASSEMBLY
SCALE: 3" = 1'-0"

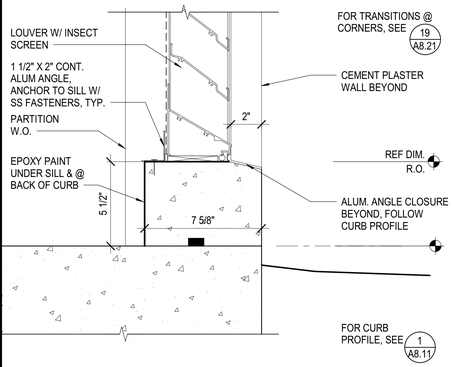

17 / A8.11 LOUVER SILL @ CURB
SCALE: 3" = 1'-0"

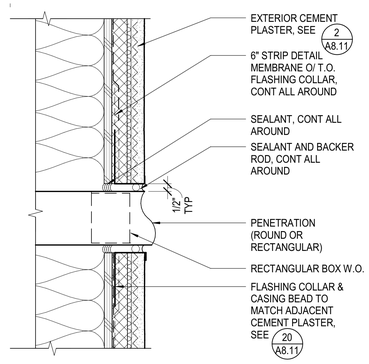

13 / A8.11 TYP PENETRATION AT CEMENT PLASTER - SECTION
SCALE: 3" = 1'-0"

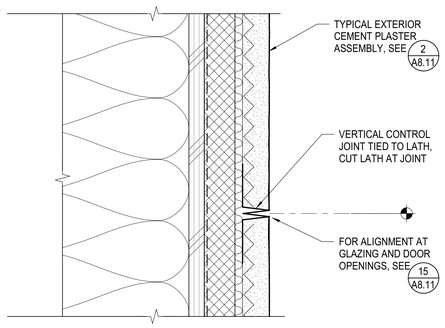

9 / A8.11 VERTICAL CEMENT PLASTER CONTROL JOINT
SCALE: 6" = 1'-0"

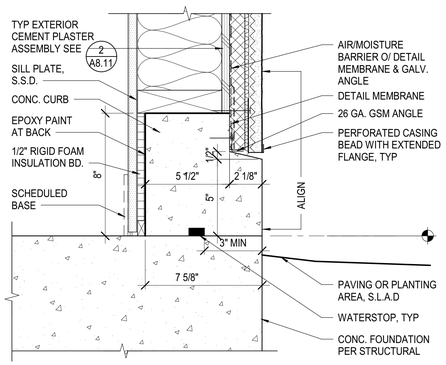

1 / A8.11 TYPICAL CEMENT PLASTER AT CURB
SCALE: 3" = 1'-0"

C:\Users\s.sanchez\Documents\20020-A-CSU STANISLAUS CDC- CENTRAL_ehdd-sjiing.rvt

APPROVED
DIV. OF THE STATE ARCHITECT
APP: 02-119316 INC:
REVIEWED FOR
SS☐ FLS☐ ACS☑
DATE: 03/24/2022

Division of the State Architect

Office of the State Fire Marshal

OFFICE OF THE STATE FIRE MARSHAL
APPROVED FIRE AND PANIC ONLY
03/14/22
21-0498
Approval of this plan does not authorize or approve any omission or deviation from applicable regulations. Final approval is subject to field inspection. One set of approved plans shall be available on the project site at all times.

CSUS CHILD DEVELOPMENT CENTER

CALIFORNIA STATE
UNIVERSITY, STANISLAUS
ONE UNIVERSITY CIRCLE
TURLOCK, CA 95382

ehdd.

PIER 1, BAY 2
THE EMBARCADERO
SAN FRANCISCO, CA 94111

INFO@EHDD.COM
+1 415-285-9193

Consultant

Stamp

LICENSED ARCHITECT
JENNIFER K DEVLIN
No. C-27784
Ren. 5-31-23
STATE OF CALIFORNIA

Printing	Date
95% CONSTRUCTION DOCUMENTS	06.25.2021
PERMIT SET	08.16.2021
PERMIT SET - DSA V2	12.15.2021
PERMIT SET - SFM	12.21.2021

Revisions and Description	Date

Scale
As indicated

Drawn by
LR

EHDD Job Number
20020

Sheet Title
EXTERIOR WALL DETAILS - CEMENT PLASTER

Sheet Number
A8.11 V3

12/13/2021 11:50:39 AM

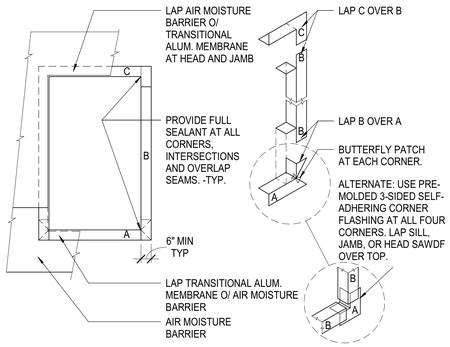

20 A8.21 TYPICAL FLASHING @ OPENING
SCALE: 3" = 1'-0"

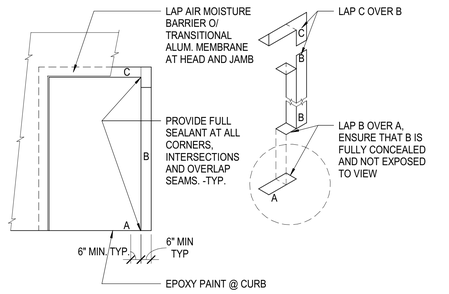

19 A8.21 TYPICAL FLASHING @ OPENING @ CONC. CURB
SCALE: 3" = 1'-0"

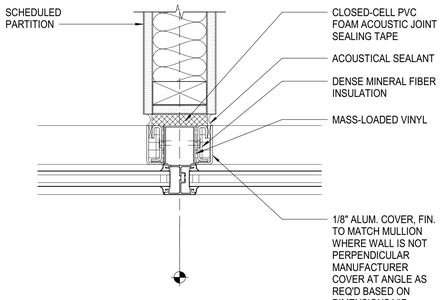

15 A8.21 ACOUSTIC WALL PARTITION AT MULLION-PLAN
SCALE: 3" = 1'-0"

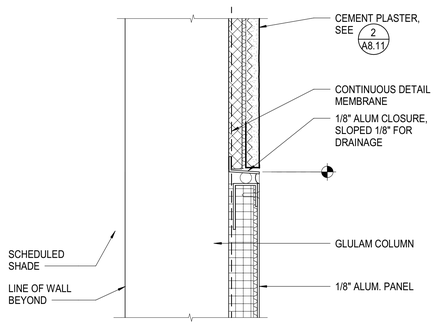

12 A8.21 HEAD DETAIL - ALUM PANEL @ CORNER
SCALE: 3" = 1'-0"

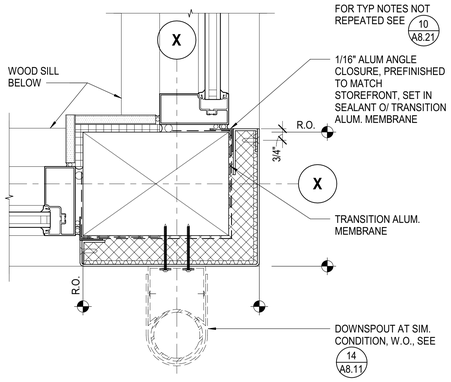

11 A8.21 PLAN DETAIL - STOREFRONT CORNER
SCALE: 3" = 1'-0"

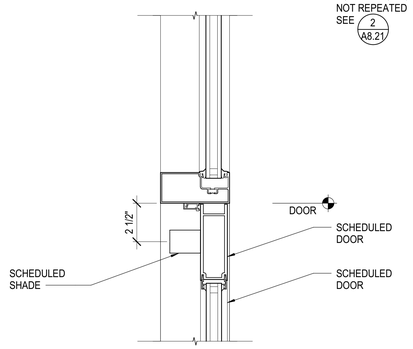

7 A8.21 HEAD DETAIL - STOREFRONT ENTRANCE
SCALE: 3" = 1'-0"

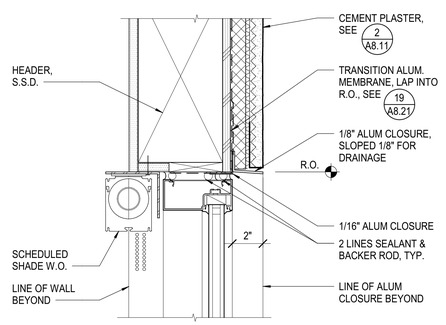

4 A8.21 HEAD DETAIL - STOREFRONT @ CEMENT PLASTER
SCALE: 3" = 1'-0"

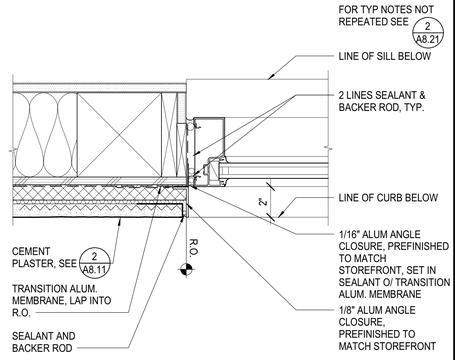

3 A8.21 JAMB DETAIL - STOREFRONT @ CEMENT PLASTER
SCALE: 3" = 1'-0"

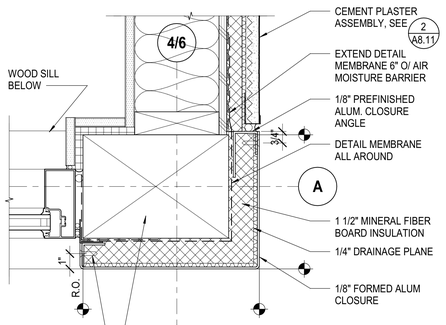

10 A8.21 PLAN DETAIL - STOREFRONT & CEM PLASTER CORNER
SCALE: 3" = 1'-0"

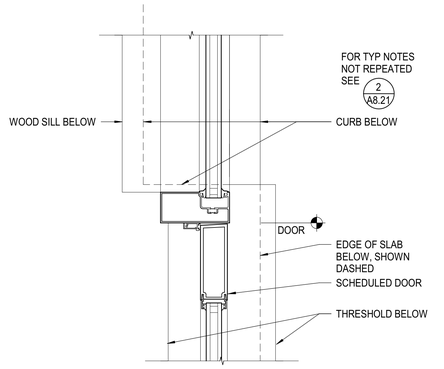

6 A8.21 JAMB DETAIL - STOREFRONT ENTRANCE
SCALE: 3" = 1'-0"

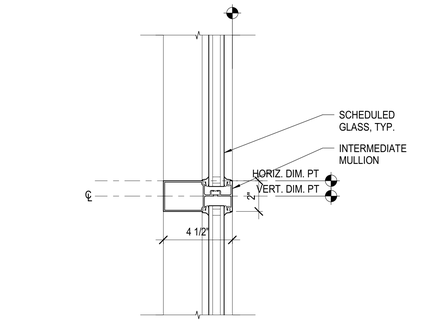

2 A8.21 PLAN DETAIL - STOREFRONT MULLION
SCALE: 3" = 1'-0"

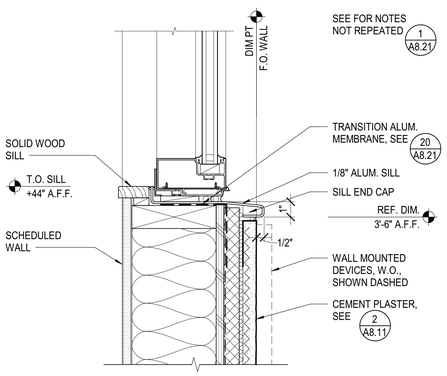

13 A8.21 SILL DETAIL - STOREFRONT @ CEM. PLASTER
SCALE: 3" = 1'-0"

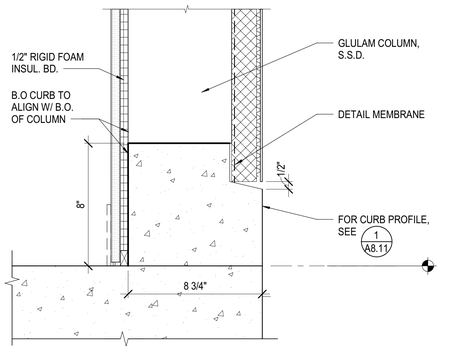

9 A8.21 SILL DETAIL - ALUM PANEL @ CORNER
SCALE: 3" = 1'-0"

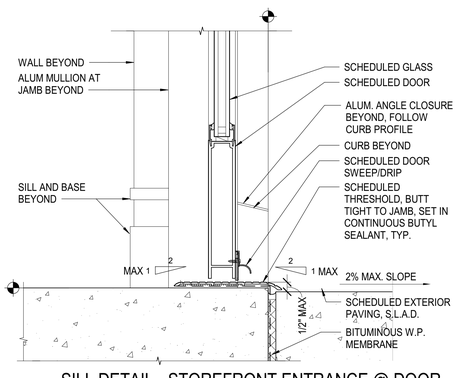

5 A8.21 SILL DETAIL - STOREFRONT ENTRANCE @ DOOR THRESHOLD
SCALE: 3" = 1'-0"

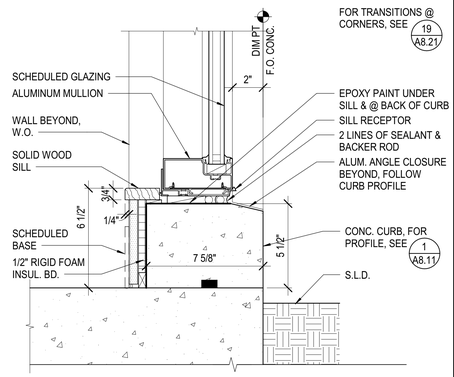

1 A8.21 SILL DETAIL - STOREFRONT
SCALE: 3" = 1'-0"

C:\Users\s.sanchez\Documents\20020-A-CSU STANISLAUS CDC- CENTRAL_ehdd-sjjing.rvt

APPROVED
DIV. OF THE STATE ARCHITECT
APP: 02-119316 INC:
REVIEWED FOR
SS☐ FLS☐ ACS☑
DATE: 03/24/2022

Division of the State Architect

Office of the State Fire Marshal

OFFICE OF THE STATE FIRE MARSHAL
APPROVED FIRE AND PANIC ONLY
03/14/22
21-0498
Approval of this plan does not authorize or approve any omission or deviation from applicable requirements. Final approval is subject to field inspection. One set of approved plans shall be available on the project site at all times.

CSUS CHILD DEVELOPMENT CENTER

CALIFORNIA STATE UNIVERSITY, STANISLAUS
ONE UNIVERSITY CIRCLE
TURLOCK, CA 95382

ehdd.

PIER 1, BAY 2
THE EMBARCADERO
SAN FRANCISCO, CA 94111

INFO@EHDD.COM
+1 415-285-9193

Consultant

Stamp

Printing	Date
95% CONSTRUCTION DOCUMENTS	06.25.2021
PERMIT SET	08.16.2021
PERMIT SET - DSA V2	12.15.2021
PERMIT SET - SFM	12.21.2021

Revisions and Description	Date

Scale
3" = 1'-0"

Drawn by
Author

EHDD Job Number
20020

Sheet Title
EXTERIOR STOREFRONT DETAILS

Sheet Number
A8.21 V3

12/13/2021 11:51:06 AM

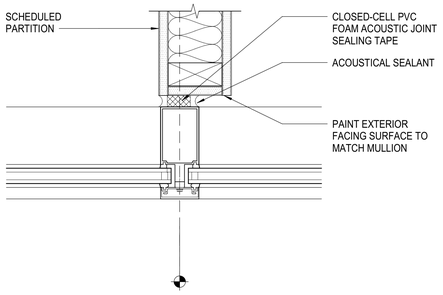

16 A8.22 WALL PARTITION AT MULLION-PLAN
SCALE: 3" = 1'-0"

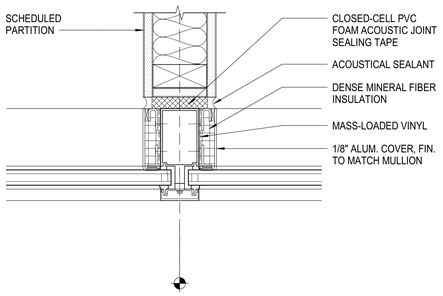

15 A8.22 ACOUSTIC WALL PARTITION AT MULLION-PLAN
SCALE: 3" = 1'-0"

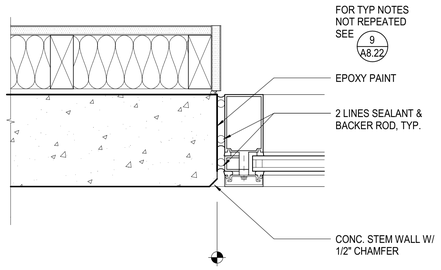

11 A8.22 JAMB DETAIL - WW @ CONCRETE STEM WALL
SCALE: 3" = 1'-0"

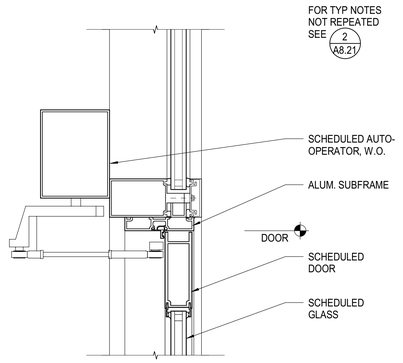

7 A8.22 HEAD DETAIL - WW ENTRANCE
SCALE: 3" = 1'-0"

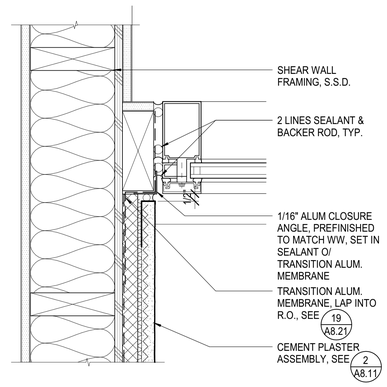

3 A8.22 JAMB DETAIL - WW @ CEMENT PLASTER
SCALE: 3" = 1'-0"

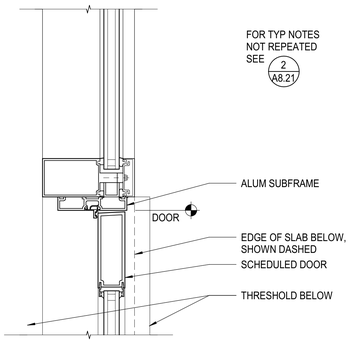

6 A8.22 JAMB DETAIL - WW ENTRANCE
SCALE: 3" = 1'-0"

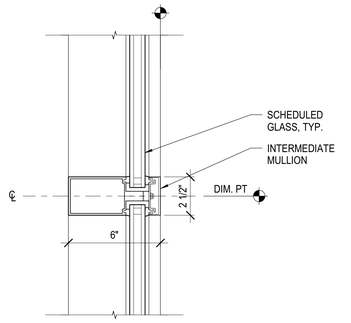

2 A8.22 PLAN DETAIL - WW @ MULLION
SCALE: 3" = 1'-0"

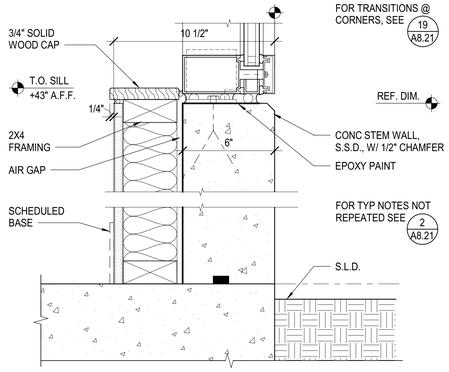

9 A8.22 SILL DETAIL - WW AT CONC. STEM WALL
SCALE: 3" = 1'-0"

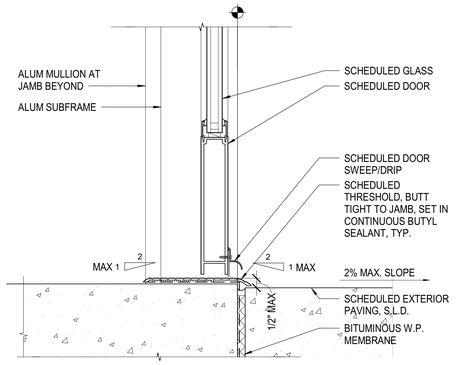

SILL DETAIL - WW ENTRANCE @ DOOR THRESHOLD
5 A8.22
SCALE: 3" = 1'-0"

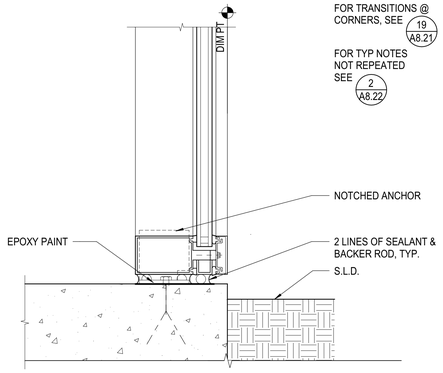

1 A8.22 SILL DETAIL - WINDOW WALL
SCALE: 3" = 1'-0"

C:\Users\s.sanchez\Documents\20020-A-CSU STANISLAUS CDC- CENTRAL_ehdd-sjling.rvt

Division of the State Architect
APPROVED
DIV. OF THE STATE ARCHITECT
APP: 02-119316 INC:
REVIEWED FOR
SS☐ FLS☐ ACS☑
DATE: 03/24/2022

Office of the State Fire Marshal
OFFICE OF THE STATE FIRE MARSHAL
APPROVED FIRE AND PANIC ONLY
03/14/22
21-0498
Approval of this plan does not authorize or approve any omission or deviation from applicable requirements. Final approval is subject to field inspection. One set of approved plans shall be available on the project site at all times.

CSUS CHILD DEVELOPMENT CENTER

CALIFORNIA STATE UNIVERSITY, STANISLAUS
ONE UNIVERSITY CIRCLE
TURLOCK, CA 95382

ehdd.

PIER 1, BAY 2
THE EMBARCADERO
SAN FRANCISCO, CA 94111

INFO@EHDD.COM
+1 415-285-9193

Consultant

Stamp

Printing	Date
95% CONSTRUCTION DOCUMENTS	06.25.2021
PERMIT SET	08.16.2021
PERMIT SET - DSA V2	12.15.2021
PERMIT SET - SFM	12.21.2021

Revisions and Description	Date

Scale
3" = 1'-0"

Drawn by
Author

EHDD Job Number
20020

Sheet Title
EXTERIOR WINDOW WALL DETAILS

Sheet Number
A8.22 V3

12/13/2021 11:51:41 AM

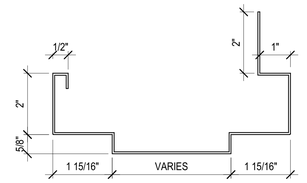

A. FRAMED PARTITION

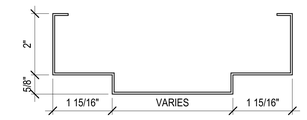

B. CONCRETE WALL

4 / A8.23 HM DOOR FRAME PROFILES
SCALE: 6" = 1'-0"

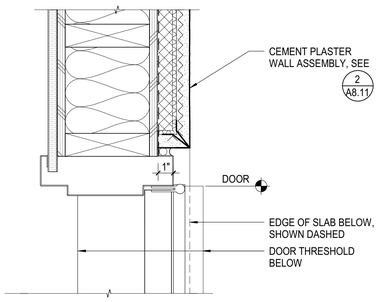

2 / A8.23 SECTION DETAIL - HM FRAME HEAD (JAMB SIM.)
SCALE: 3" = 1'-0"

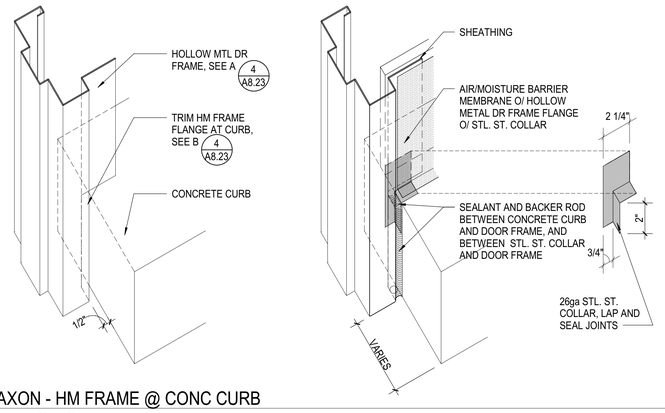

9 / A8.23 AXON - HM FRAME @ CONC CURB
SCALE: 3" = 1'-0"

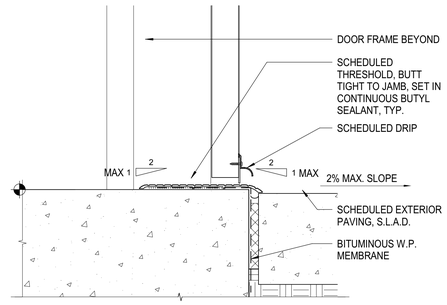

1 / A8.23 SECTION DETAIL - HM FRAME SILL
SCALE: 3" = 1'-0"

Division of the State

APPROVED
DIV. OF THE STATE ARCHITECT
APP: 02-119316 INC:
REVIEWED FOR
SS☐ FLS☐ ACS☑
DATE: 03/24/2022

Office of the State Fire Marshal

OFFICE OF THE STATE FIRE MARSHAL
APPROVED FIRE AND PANIC ONLY
03/14/22
21-0498
Approval of this plan does not authorize or approve any omission or deviation from applicable regulations. Final approval is subject to field inspection. One set of approved plans shall be available on the project site at all times.

CSUS CHILD DEVELOPMENT CENTER

CALIFORNIA STATE UNIVERSITY, STANISLAUS
ONE UNIVERSITY CIRCLE
TURLOCK, CA 95382

ehdd.

PIER 1, BAY 2
THE EMBARCADERO
SAN FRANCISCO, CA 94111

INFO@EHDD.COM
+1 415-285-9193

Consultant

Stamp

LICENSED ARCHITECT
JENNIFER K DEVLIN
No. 27334
Ren. 5-31-23
STATE OF CALIFORNIA

Printing	Date
95% CONSTRUCTION DOCUMENTS	06.25.2021
PERMIT SET	08.16.2021
PERMIT SET - DSA V2	12.15.2021
PERMIT SET - SFM	12.21.2021

Revisions and Description	Date

Scale
As indicated

Drawn by
Author

EHDD Job Number
20020

Sheet Title
EXTERIOR DETAILS

Sheet Number
A8.23 V3

C:\Users\s.sanchez\Documents\20020-A-CSU STANISLAUS CDC- CENTRAL_ehdd-sijing.rvt

12/10/2021 11:06:59 AM

Division of the State Architect

APPROVED
DIV. OF THE STATE ARCHITECT
APP: 02-119316 INC:
REVIEWED FOR
SS☐ FLS☐ ACS☑
DATE: 03/24/2022

Office of the State Fire Marshal

OFFICE OF THE STATE FIRE MARSHAL
APPROVED FIRE AND PANIC ONLY
03/14/22
21-0498
Approval of this plan does not authorize or approve any omission or deviation from applicable regulations. Final approval is subject to field inspection. One set of approved plans shall be available on the project site at all times.

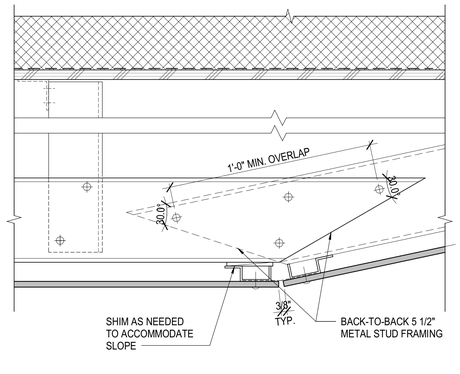

15 A8.24 DIAGONAL SOFFIT PANEL JOINT
SCALE: 3" = 1'-0"

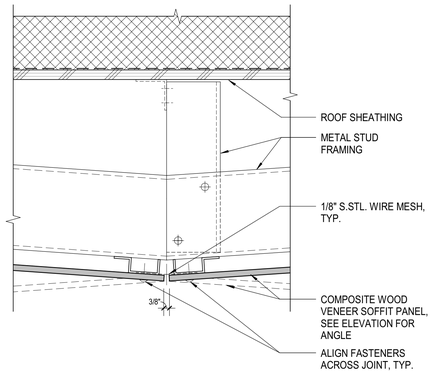

11 A8.24 TYPICAL SOFFIT PANEL JOINT
SCALE: 3" = 1'-0"

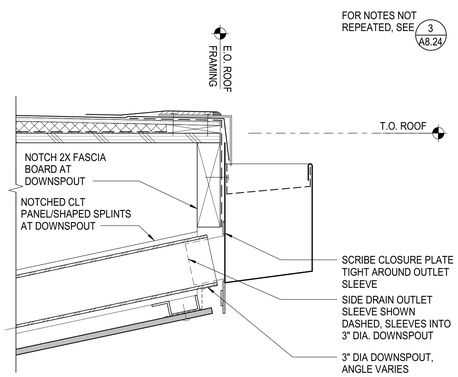

7 A8.24 SECTION DETAIL - GUTTER @ DOWNSPOUT
SCALE: 3" = 1'-0"

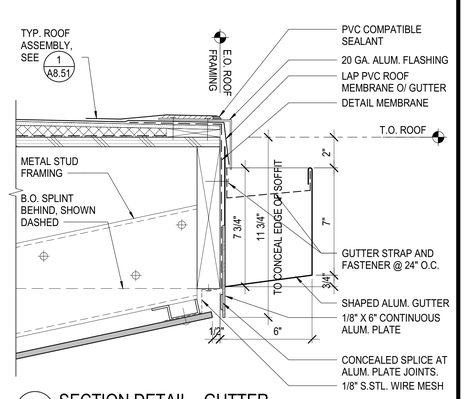

3 A8.24 SECTION DETAIL - GUTTER
SCALE: 3" = 1'-0"

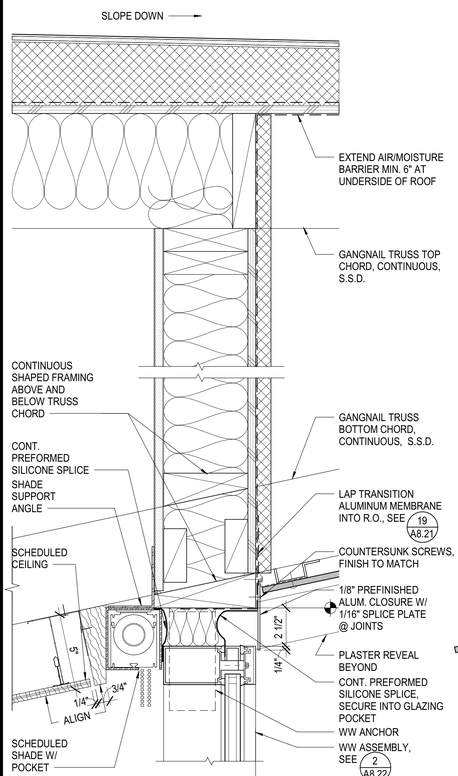

17 A8.24 SECTION DETAIL - SOFFIT @ NORTH & SOUTH ENTRY
SCALE: 3" = 1'-0"

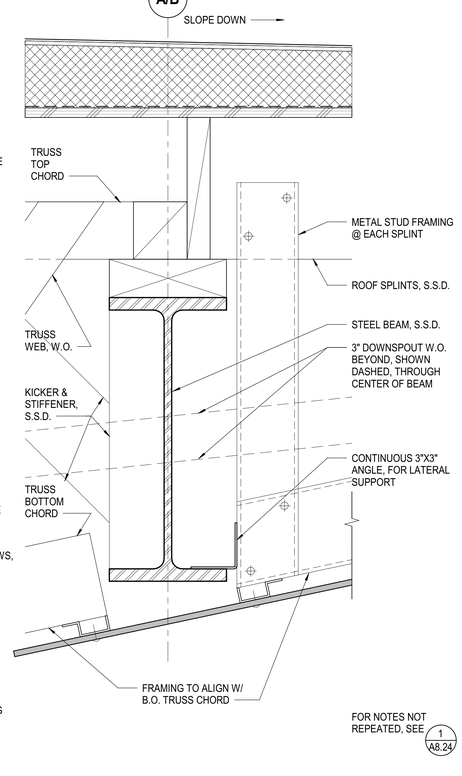

13 A8.24 SECTION DETAIL - SOFFIT AT BEAM @ GRIDLINES A & B
SCALE: 3" = 1'-0"

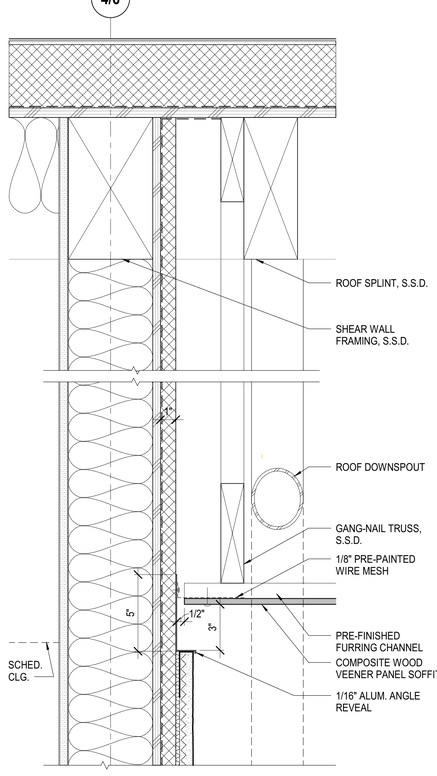

9 A8.24 SECTION DETAIL - SOFFIT @ GRIDLINES 4 & 6
SCALE: 3" = 1'-0"

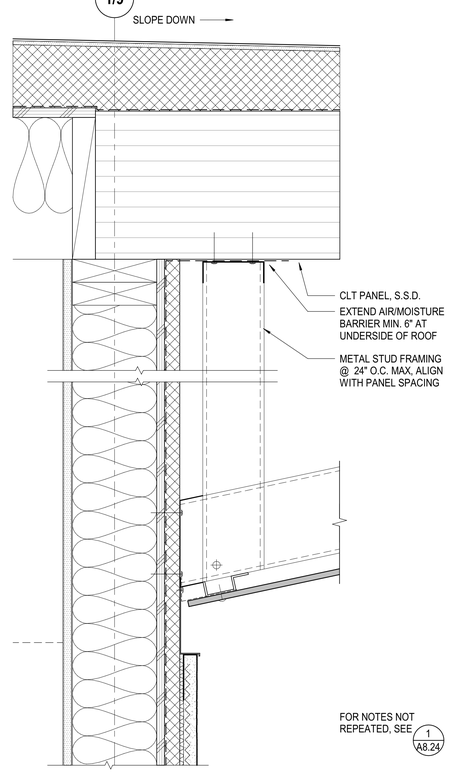

5 A8.24 SECTION DETAIL - SOFFIT @ GRIDLINES 1 & 9
SCALE: 3" = 1'-0"

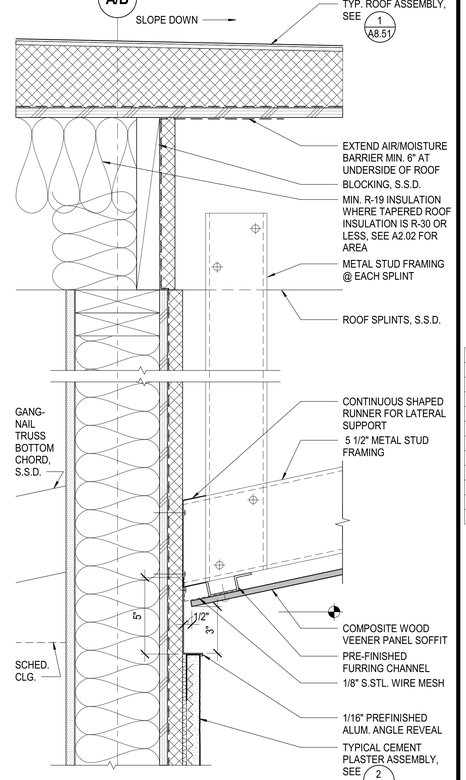

1 A8.24 SECTION DETAIL - SOFFIT @ GRIDLINES A & B
SCALE: 3" = 1'-0"

CSUS CHILD DEVELOPMENT CENTER
CALIFORNIA STATE UNIVERSITY, STANISLAUS
ONE UNIVERSITY CIRCLE
TURLOCK, CA 95382

ehdd.

PIER 1, BAY 2
THE EMBARCADERO
SAN FRANCISCO, CA 94111

INFO@EHDD.COM
+1 415-285-9193

Consultant

Stamp

LICENSED ARCHITECT
JENNIFER K DEVLIN
No. C-27844
Ren. 5-31-23
STATE OF CALIFORNIA

Printing	Date
95% CONSTRUCTION DOCUMENTS	06.25.2021
PERMIT SET	08.16.2021
PERMIT SET - DSA V2	12.15.2021
PERMIT SET - SFM	12.21.2021

Revisions and Description	Date

Scale
3" = 1'-0"

Drawn by
Author

EHDD Job Number
20020

Sheet Title
EXTERIOR SOFFIT DETAILS

Sheet Number
A8.24 V3

C:\Users\s.sanchez\Documents\20020-A-CSU STANISLAUS CDC- CENTRAL_ehdd-sjjing.rvt

12/13/2021 11:57:53 AM

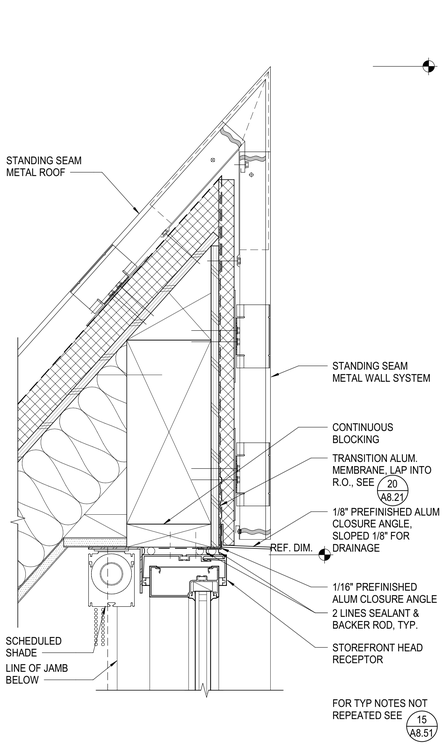

19 A8.51 HEAD DETAIL - STOREFRONT@ ROOF MONITOR

SCALE: 3" = 1'-0"

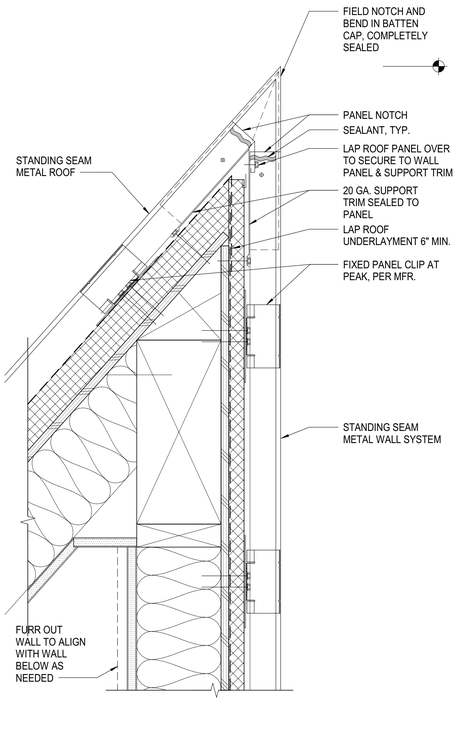

15 A8.51 SECTION DETAIL - STANDING SEAM METAL ROOF RIDGE

SCALE: 3" = 1'-0"

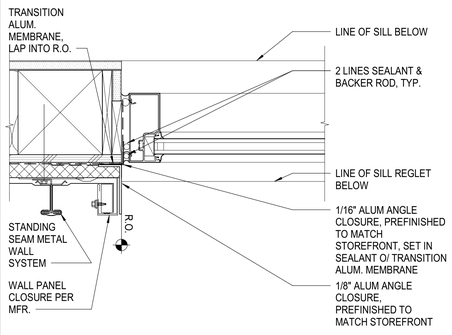

18 A8.51 JAMB DETAIL - STOREFRONT @ STANDING SEAM

SCALE: 3" = 1'-0"

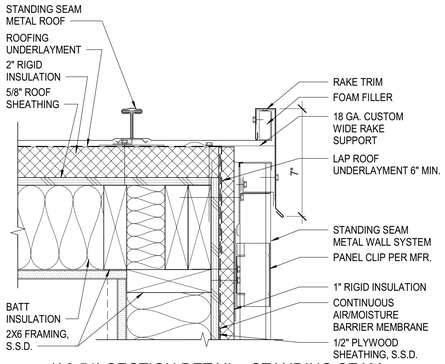

14 A8.51 (A8.51) SECTION DETAIL - STANDING SEAM METAL ROOF RAKE

SCALE: 3" = 1'-0"

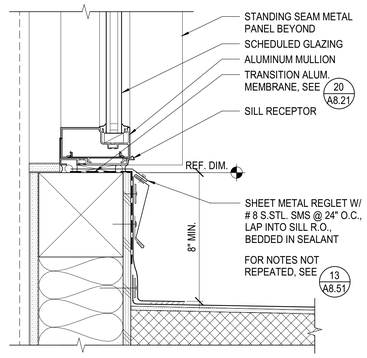

17 A8.51 SILL DETAIL - STOREFRONT @ ROOF MONITOR

SCALE: 3" = 1'-0"

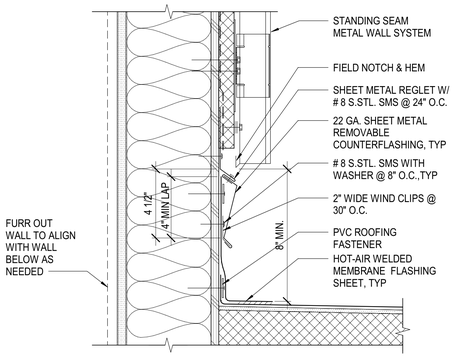

13 A8.51 SECTION DETAIL - STANDING SEAM METAL WALL BASE

SCALE: 3" = 1'-0"

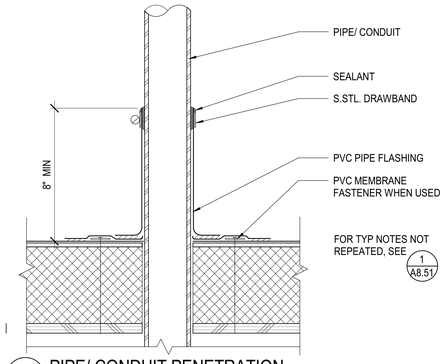

10 A8.51 PIPE/ CONDUIT PENETRATION

SCALE: 3" = 1'-0"

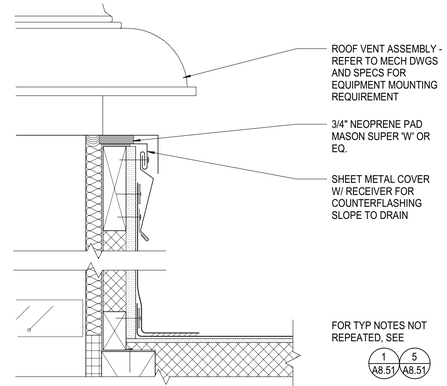

9 A8.51 DOME ROOF VENT EXHAUST FAN

SCALE: 3" = 1'-0"

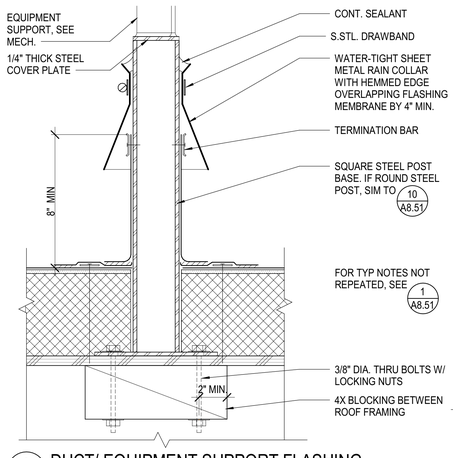

6 A8.51 DUCT/ EQUIPMENT SUPPORT FLASHING

SCALE: 3" = 1'-0"

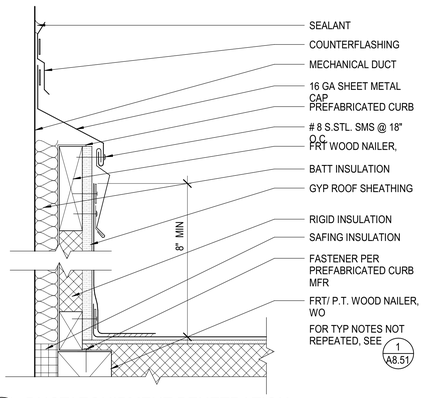

5 A8.51 DUCT/ EQUIPMENT PENETRATION

SCALE: 3" = 1'-0"

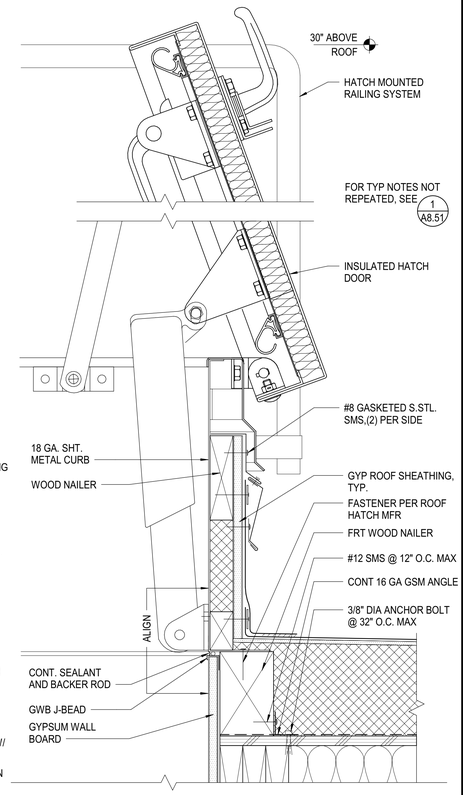

2 A8.51 TYP ROOF HATCH

SCALE: 3" = 1'-0"

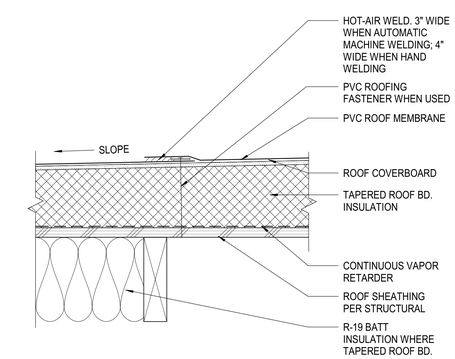

1 A8.51 TYP ROOF ASSEMBLY & LAP JOINT

SCALE: 3" = 1'-0"

C:\Users\s.sanchez\Documents\20020-A-CSU STANISLAUS CDC- CENTRAL_ehdd-sjiing.rvt

Division of the State Architect

APPROVED
DIV. OF THE STATE ARCHITECT
APP: 02-119316 INC:
REVIEWED FOR
SS☐ FLS☐ ACS☑
DATE: 03/24/2022

Office of the State Fire Marshal

OFFICE OF THE STATE FIRE MARSHAL
APPROVED FIRE AND PANIC ONLY
03/14/22
21-0498
Approval of this plan does not authorize or approve any omission or deviation from applicable regulations. Final approval is subject to field inspection. One set of approved plans shall be available on the project site at all times.

CSUS CHILD DEVELOPMENT CENTER

CALIFORNIA STATE UNIVERSITY, STANISLAUS
ONE UNIVERSITY CIRCLE
TURLOCK, CA 95382

ehdd.

PIER 1, BAY 2
THE EMBARCADERO
SAN FRANCISCO, CA 94111

INFO@EHDD.COM
+1 415-285-9193

Consultant

Stamp

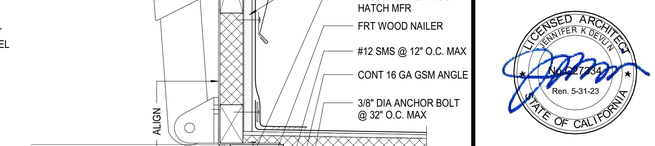

Printing	Date
95% CONSTRUCTION DOCUMENTS	06.25.2021
PERMIT SET	08.16.2021
PERMIT SET - DSA V2	12.15.2021
PERMIT SET - SFM	12.21.2021

Revisions and Description	Date

Scale
3" = 1'-0"

Drawn by
Author

EHDD Job Number
20020

Sheet Title
ROOF DETAILS

Sheet Number
A8.51 V3

12/10/2021 9:35:42 AM

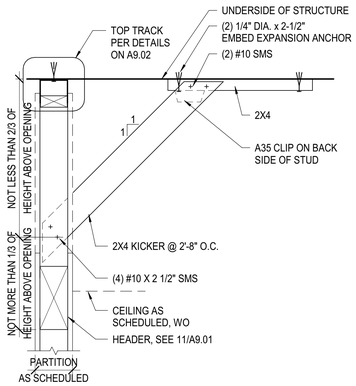

20 A9.01 WALL BRACE AT OPNG'S MORE THAN 10' WIDE

SCALE: 1 1/2" = 1'-0"

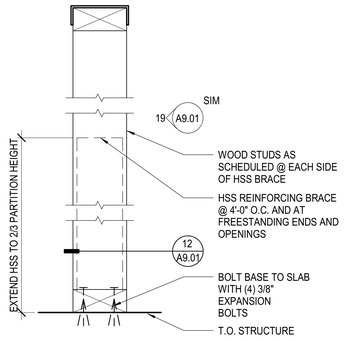

16 A9.01 SECTION - BRACE @ PARTIAL HT. WALL

SCALE: 3" = 1'-0"

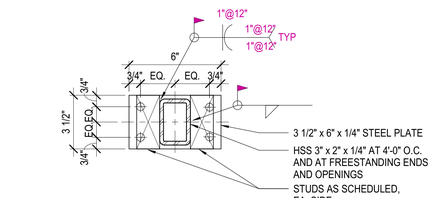

12 A9.01 PLAN - BRACE @ PARTIAL HEIGHT WALL

SCALE: 3" = 1'-0"

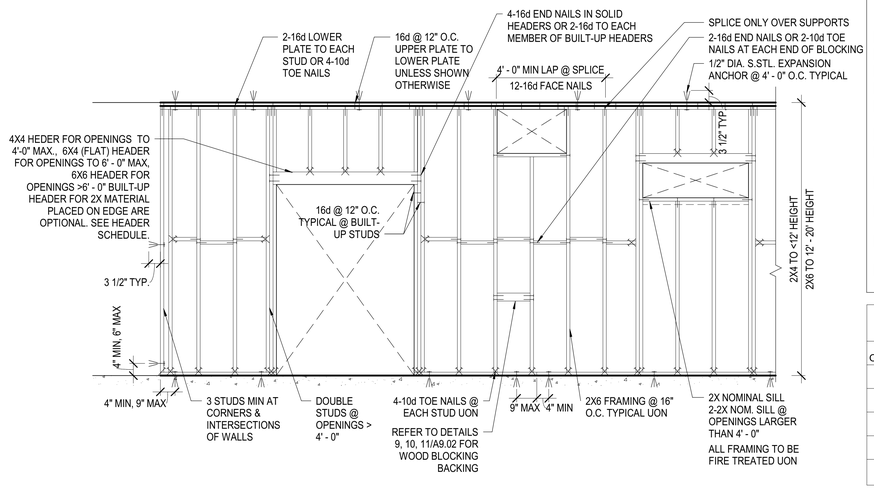

11 A9.01 TYPICAL WOOD FRAMING FOR INTERIOR PARTITIONS

SCALE: 1/4" = 1'-0"

GENERAL SHEET NOTES

- ALL PARTITIONS TO BE FULL-HEIGHT TO UNDERSIDE OF STRUCTURAL TRUSSES, UON
- GWB TO BE TYPE 'X' UON AND WATER RESISTANT AT WET CONDITIONS
- PROVIDE CEMENTITIOUS BACKER BOARD WHERE TILE FINISH OCCURS, SEE SHEET A9.41 FOR TILE DETAILS.
- CONT. WOOD SILL PLATE TO MATCH STUD SIZE, UON
- REFERENCE STRUCTURAL DRAWING FOR STUD SPACING
- PROVIDE OPENING AND THROUGH-PENETRATION PROTECTION AT WALLS DESIGNATED AS FIRE SEPARATIONS ON G1.1 & A2 SERIES
- SEE SHEET A0.40 FOR SCHEDULED WALL FINISHES
- SEE A6 SERIES FOR SCHEDULED CEILINGS.
- ALLOW FOR ADDITIONAL ASSEMBLY COMPONENTS, AS REQUIRED TO MEET PROJECT ACOUSTICAL REQUIREMENTS. STRATEGY MAY INCLUDE RESILIENT CHANNELS

PARTITION TYPE DESIGNATION

D3E2
- PARTITION TYPE
- STUD SIZE
- PARTITION SUBTYPE (ACOUSTIC RATING, FIRE RATING, SPECIAL CONDITIONS, ETC)
- GYP BD LAYERS (DENOTED ONLY FOR WALL TYPES C THROUGH J)

PARTITION SUBTYPE DESIGNATION

--A--	WITH BATT INSULATION
--B--	WITHOUT BATT INSULATION
--C--	EXTEND GYP 6" ABOVE CEILING, W/ BATT INSULATION
--D--	EXTEND GYP 6" ABOVE CEILING, W/O BATT INSULATION
--E--	PARTIAL HEIGHT WALL NOT EXTENDING TO CEILNG, W/O BATT INSULATION, SEE ELEVATIONS FOR HEIGHT
--F--	FULL HEIGHT GYP TO UNDRSIDE OF ROOF SHEATHING, W/ BATT INSULATION
--G--	PARTIAL HEIGHT WALL NOT EXTENDING TO CEILNG, W/O BATT INSULATION, FINISHED PLYWOOD BOTH SIDES, SEE ELEVATIONS FOR HEIGHT
--P--	FULL HEIGHT GYP TO UNDRSIDE OF ROOF SHEATHING WITH ONE LAYER PLYWOOD SHEATHING PER STRUCTURAL, W/ BATT INSULATION
--Q--	FULL HEIGHT GYP TO UNDRSIDE OF ROOF SHEATHINGWITH ONE LAYER PLYWOOD SHEATHING PER STRUCTURAL, W/O BATT INSULATION
--R--	FULL HEIGHT GYP TO UNDRSIDE OF ROOF SHEATHING WITH 2 LAYERS PLYWOOD SHEATHING PER STRUCTURAL, W/ BATT INSULATION
--S--	FULL HEIGHT GYP WITH 2 LAYERS PLYWOOD SHEATHING PER STRUCTURAL, W/O BATT INSULATION

WOOD FRAMED PARTITION HEADER SCHEDULE	
Opening Width (ft)	Header Size (in)
<4'-0"	4x4
4'-0" - 6'-0"	4x6
6'-0" - 8'-0"	4x8
8'-0" - 10'-0"	4x10
>10'-0"	ENGINEERING REQUIRED

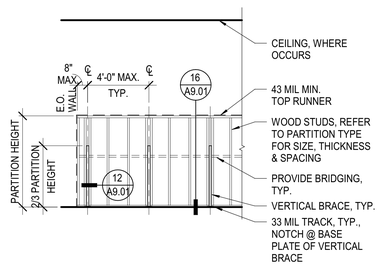

19 A9.01 FRAMING FOR PARTIAL HT. WALL NOT EXTENDING TO CLG ABOVE

SCALE: 1/4" = 1'-0"

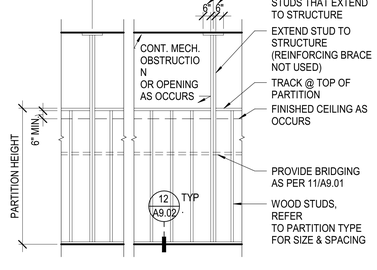

15 A9.01 FRAMING FOR PARTIAL HEIGHT WALL NOT EXTENDING TO SLAB ABOVE

SCALE: 1/4" = 1'-0"

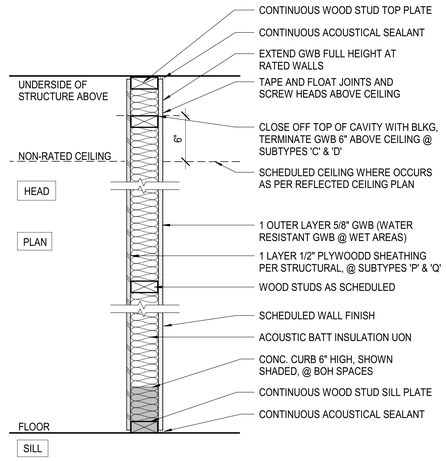

F TYPICAL WOOD FURRING PARTITION

WALL TYPE	STUD SIZE	OVERALL DIMENSION	FIRE RATING	COMMENTS
F4B	2x4	4 1/8"		
F6P	2x6	6 1/8"		

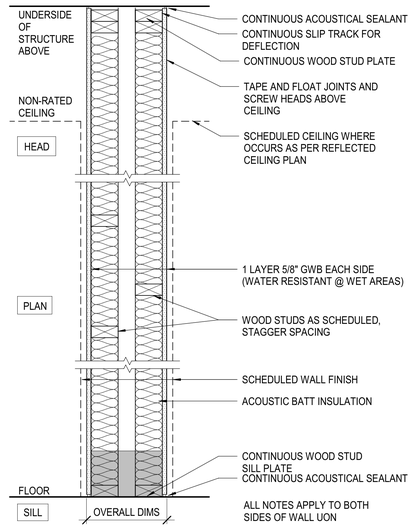

E DOUBLE STUD PARTITION (UL #U493 @ FIRE RATED CONDITION)

WALL TYPE	STUD SIZE	OVERALL DIMENSION	FIRE RATING	COMMENTS
E4A1	2X4	SEE PLAN		1 LAYER OF GYP BD EA. SIDE

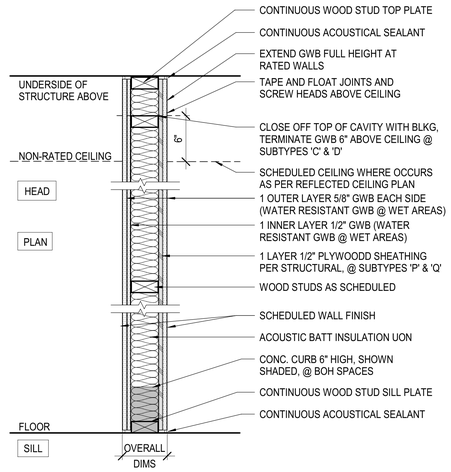

C TYPICAL WOOD PARTITION, (1 LAYER OF GYP EA/ SIDE) (UL #U309 @ FIRE-RATED CONDITION)

WALL TYPE	STUD SIZE	OVERALL DIMENSION	FIRE RATING	COMMENTS
C4A	2x4	5 1/4"		
C6A	2x6	7 1/4"		
C6P	2x6	7 3/4"		PLYWD SHEATHING LOCATED AT SIDE W/ ONE LAYER OF GWB.
C6R	2x6	8 1/4"		PLYWD SHEATHING LOCATED ON BOTH SIDES, AS INDICATED ON STRUCTURAL PLANS

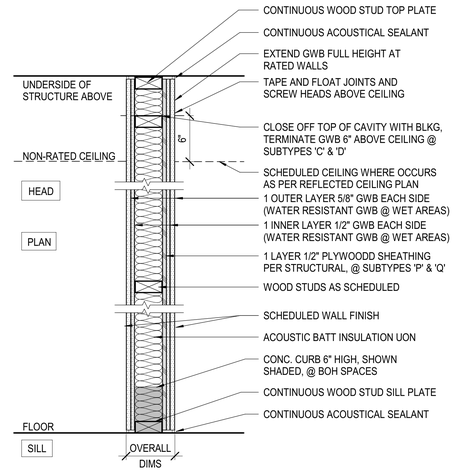

B TYPICAL WOOD PARTITION, (1 LAYER OF GYP EA/ SIDE) (UL #U309 @ FIRE-RATED CONDITION)

WALL TYPE	STUD SIZE	OVERALL DIMENSION	FIRE RATING	COMMENTS
B6A	2x6	7 3/4"		
B6P	2x6	8 1/4"		PLYWD SHEATHING LOCATED AT SIDE INDICATED ON PLANS

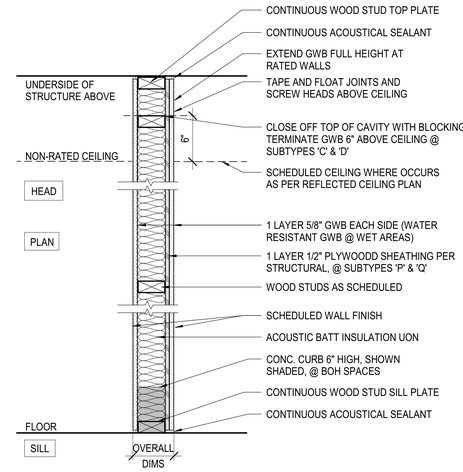

A TYPICAL WOOD PARTITION, (1 LAYER OF GYP EA/ SIDE) (UL #U309 @ FIRE-RATED CONDITION)

WALL TYPE	STUD SIZE	OVERALL DIMENSION	FIRE RATING	COMMENTS
A3B	2x3	3 3/4"		
A4A	2x4	4 3/4"		
A4B	2x4	4 3/4"		
A4G	2x4	5"		3/4" FIN PLYWD BOTH SIDES, SEE DETAIL 8/A9.33
A6A	2x6	6 3/4"		
A6B	2x6	6 3/4"		
A6P	2x6	7 1/4"		PLYWD SHEATHING LOCATED AT SIDE INDICATED ON PLANS
A6Q	2x6	7 1/4"		PLYWD SHEATHING LOCATED AT SIDE INDICATED ON PLANS
A6S	2x6	7 3/4"		PLYWD SHEATHING LOCATED ON BOTH SIDES, AS INDICATED ON STRUCTURAL PLANS

C:\Users\l.quinones\OneDrive - EHDD\Documents\20020-A-CSU STANISLAUS CDC- CENTRAL_l.quinones.rvt

Division of the State Architect
APPROVED
DIV. OF THE STATE ARCHITECT
APP: 02-119316 INC:
REVIEWED FOR
SS☐ FLS☐ ACS☑
DATE: 03/24/2022

Office of the State Fire Marshal
OFFICE OF THE STATE FIRE MARSHAL
APPROVED FIRE AND PANIC ONLY
03/14/22
21-0498
Approval of this plan does not authorize or approve any omission or deviation from applicable regulations. Final approval is subject to field inspection. One set of approved plans shall be available on the project site at all times.

CSUS CHILD DEVELOPMENT CENTER

CALIFORNIA STATE UNIVERSITY, STANISLAUS
ONE UNIVERSITY CIRCLE
TURLOCK, CA 95382

ehdd.

PIER 1, BAY 2
THE EMBARCADERO
SAN FRANCISCO, CA 94111

INFO@EHDD.COM
+1 415-285-9193

Consultant

Stamp

Printing	Date
95% CONSTRUCTION DOCUMENTS	06.25.2021
PERMIT SET	08.16.2021
PERMIT SET - DSA V2	12.15.2021
PERMIT SET - SFM	12.21.2021

Revisions and Description	Date

Scale
As indicated

Drawn by
Author

EHDD Job Number
20020

Sheet Title
WOOD PARTITION TYPES AND FRAMING DETAILS

Sheet Number
A9.01 V3

12/10/2021 9:35:45 AM

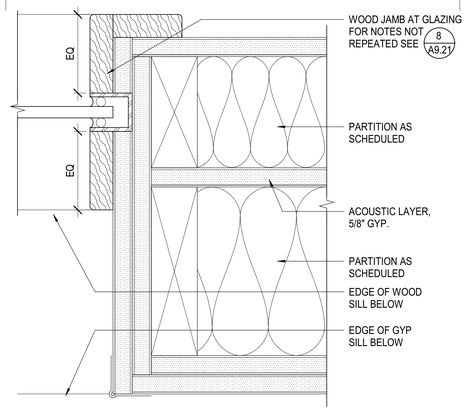

16 A9.02 FRAMING AT OBSERVATION ACOUSTIC WALL
SCALE: 6" = 1'-0"

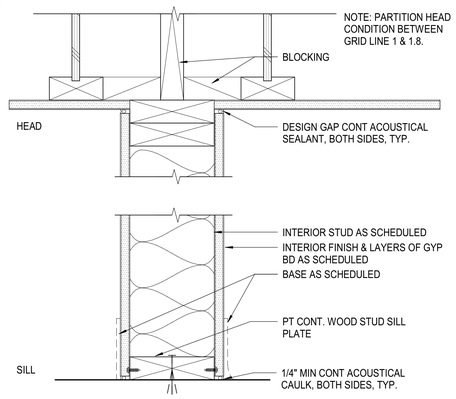

12 A9.02 TYP SILL @ CONC FLOOR & HEAD @ WOOD ROOF
SCALE: 3" = 1'-0"

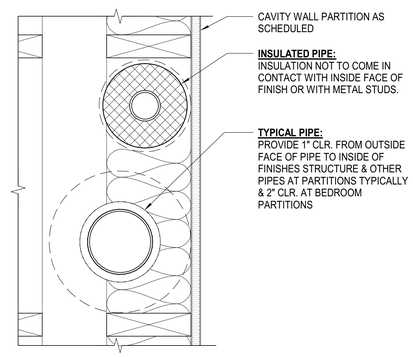

8 A9.02 ACOUSTIC TREATMENT AT PIPES IN PLUMBING WALLS
SCALE: 3" = 1'-0"

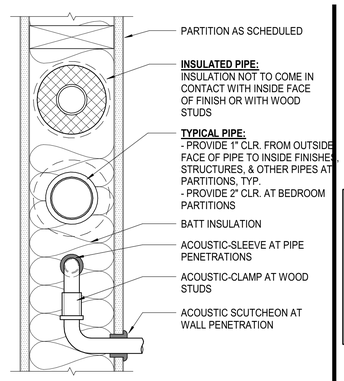

4 A9.02 ACOUSTIC TREATMENT AT PIPES IN ACOUSTIC WALLS
SCALE: 3" = 1'-0"

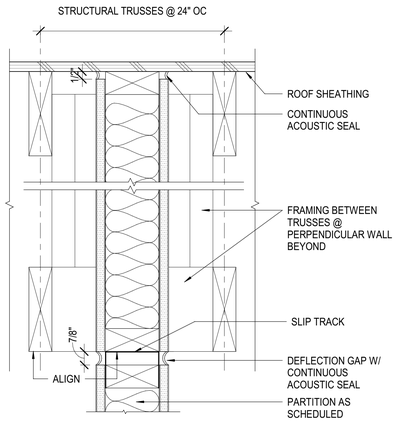

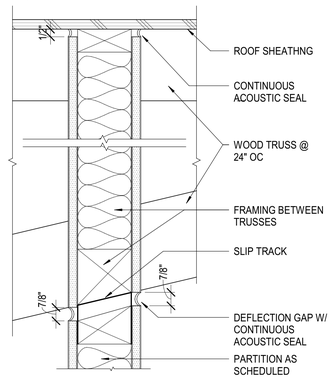

19 A9.02 FULL HEIGHT PARTITION TO UNDERSIDE OF ROOF
SCALE: 3" = 1'-0"

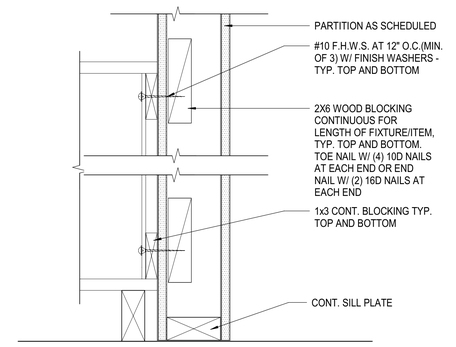

11 A9.02 TYP CASEWORK ATTACHMENT
SCALE: 3" = 1'-0"

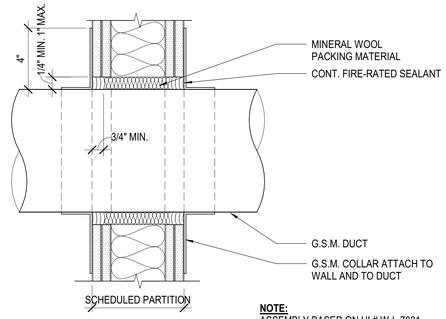

NOTE:
ASSEMBLY BASED ON UL# W-L-7021
USE UL #W-L-7006 @ 2 1/2" STUD WALLS

7 A9.02 TYPICAL ROUND DUCT PENETRATION DETAIL @ RATED PARTITION
SCALE: 3" = 1'-0"

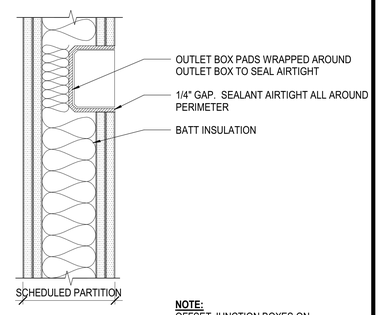

NOTE:
OFFSET JUNCTION BOXES ON OPPOSITE SIDES OF THE PARTITION BY 16" MIN.

3 A9.02 ACOUSTIC TREATMENT @ RECESSED OUTLET
SCALE: 3" = 1'-0"

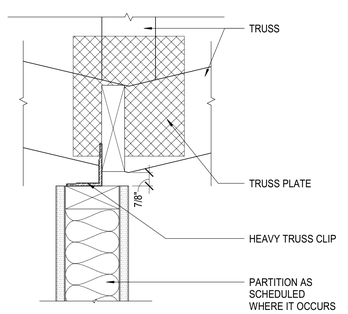

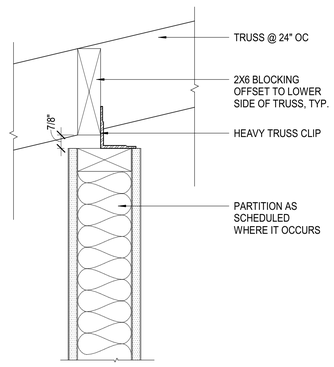

18 A9.02 TYPICAL HEAD CONDITIONS AT UNDERSIDE OF TRUSS STRUCTURE - PERPENDICULAR
SCALE: 3" = 1'-0"

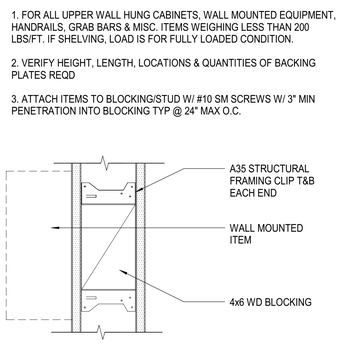

10 A9.02 TYP HEAVY DUTY WOOD BACKING
SCALE: 3" = 1'-0"

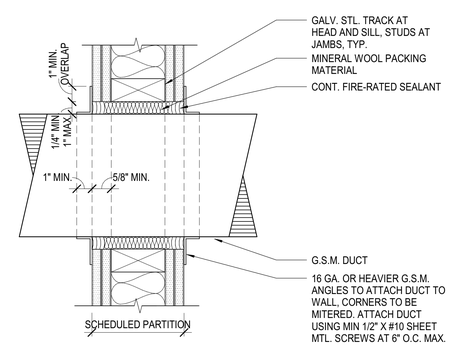

NOTE: USE UL #W-L-7008

6 A9.02 TYPICAL RECTANGULAR DUCT PENETRATION DETAIL @ RATED PARTITION
SCALE: 3" = 1'-0"

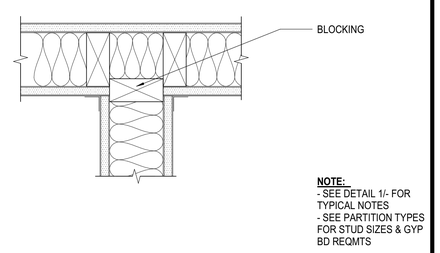

NOTE:
- SEE DETAIL 1/- FOR TYPICAL NOTES
- SEE PARTITION TYPES FOR STUD SIZES & GYP BD REQMTS

2 A9.02 TYP. PLAN-PARTITION INTERSECTION
SCALE: 3" = 1'-0"

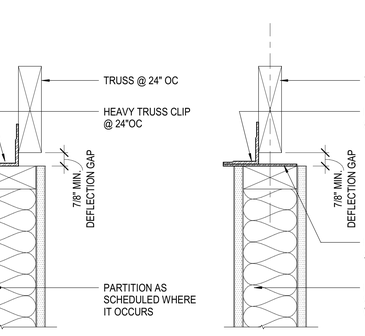

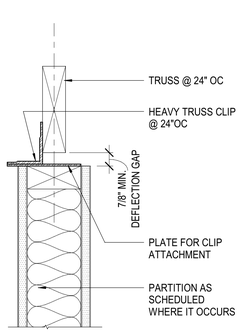

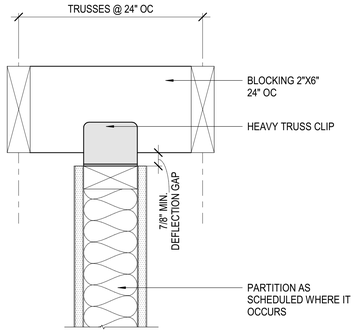

17 A9.02 TYPICAL HEAD CONDITIONS AT UNDERSIDE OF TRUSS STRUCTURE - PARALLEL
SCALE: 3" = 1'-0"

1. FOR MISC. ITEMS SUCH AS SURFACE MOUNTED MIRRORS, RECEPTACLES, TOWEL DISPENSERS, ETC. WEIGHING LESS THAN 50 LBS/FT
2. VERIFY HEIGHT, LENGTH, LOCATIONS & QUANTITIES OF BACKING PLATES REQD
3. ATTACH ITEMS TO BLOCKING/STUD W/ #10 SM SCREWS W/ 1 1/4" MIN PENETRATION INTO BLOCKING @ 24" MAX O.C.

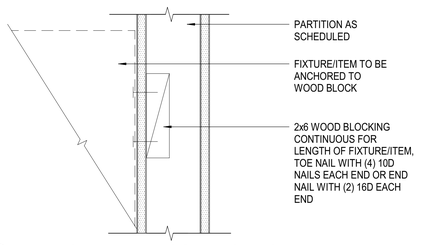

9 A9.02 TYP LIGHT DUTY WOOD BACKING
SCALE: 3" = 1'-0"

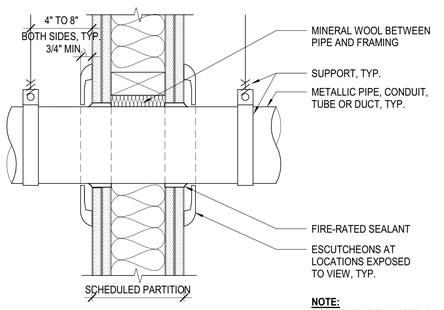

NOTE:
CONFIGURATION BASED ON UL #W-L-1001

5 A9.02 TYPICAL PIPE & CONDUIT PENETRATION DETAIL @ RATED PARTITION
SCALE: 3" = 1'-0"

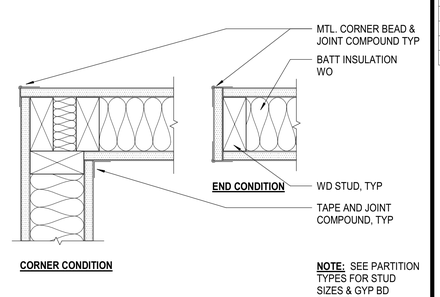

NOTE: SEE PARTITION TYPES FOR STUD SIZES & GYP BD REQMTS

1 A9.02 TYP. PLAN-PARTITION INTERSECTION CORNER & END
SCALE: 3" = 1'-0"

C:\Users\l.quinones\OneDrive - EHDD\Documents\20020-A-CSU STANISLAUS CDC- CENTRAL_l.quinones.rvt

Division of the State Architect

APPROVED
DIV. OF THE STATE ARCHITECT
APP: 02-119316 INC:
REVIEWED FOR
SS☐ FLS☐ ACS☑
DATE: 03/24/2022

Office of the State Fire Marshal

OFFICE OF THE STATE FIRE MARSHAL
APPROVED FIRE AND PANIC ONLY
03/14/22
21-0498
Approval of this plan does not authorize or approve any omission or deviation from applicable regulations. Final approval is subject to field inspection. One set of approved plans shall be available on the project site at all times.

CSUS CHILD DEVELOPMENT CENTER

CALIFORNIA STATE UNIVERSITY, STANISLAUS
ONE UNIVERSITY CIRCLE
TURLOCK, CA 95382

ehdd.

PIER 1, BAY 2
THE EMBARCADERO
SAN FRANCISCO, CA 94111

INFO@EHDD.COM
+1 415-285-9193

Consultant

Stamp

LICENSED ARCHITECT
JENNIFER K DEVLIN
No. C-27844
Ren. 5-31-23
STATE OF CALIFORNIA

Printing	Date
95% CONSTRUCTION DOCUMENTS	06.25.2021
PERMIT SET	08.16.2021
PERMIT SET - DSA V2	12.15.2021
PERMIT SET - SFM	12.21.2021

Revisions and Description	Date

Scale
As indicated

Drawn by
Author

EHDD Job Number
20020

Sheet Title
TYPICAL PARTITION DETAILS

Sheet Number
A9.02 V3

12/10/2021 9:35:48 AM

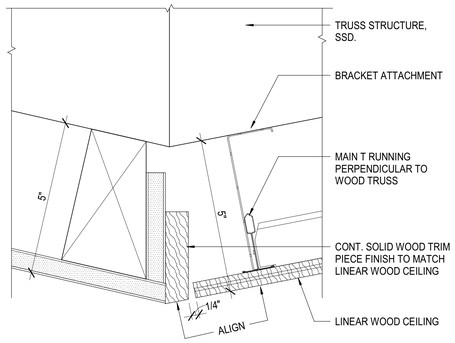

20 A9.11 WOOD TO GYP CEILING SLOPE TRANSITION
SCALE: 6" = 1'-0"

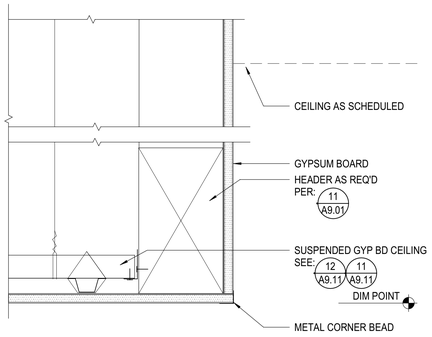

16 A9.11 SOFFIT @ SUSPENDED GYPSUM BOARD CEILING
SCALE: 3" = 1'-0"

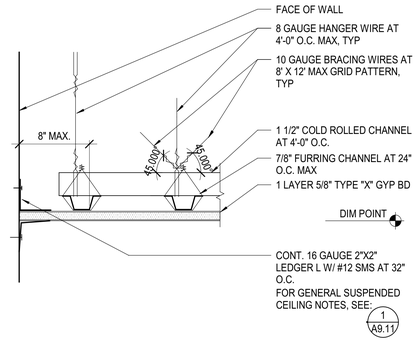

12 A9.11 FIXED END OF SUSPENDED GYPSUM BOARD CEILING ASSEMBLY
SCALE: 3" = 1'-0"

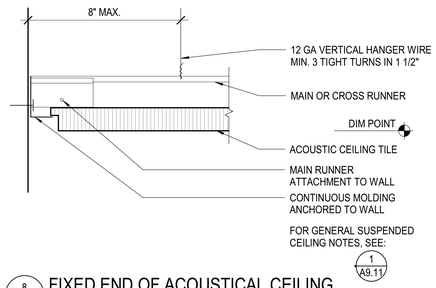

8 A9.11 FIXED END OF ACOUSTICAL CEILING
SCALE: 6" = 1'-0"

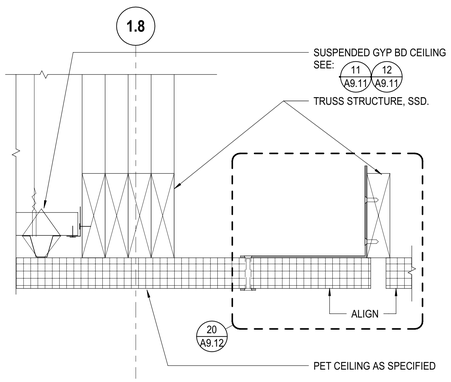

19 A9.11 CEILING TRANSITION AT GLAZING
SCALE: 3" = 1'-0"

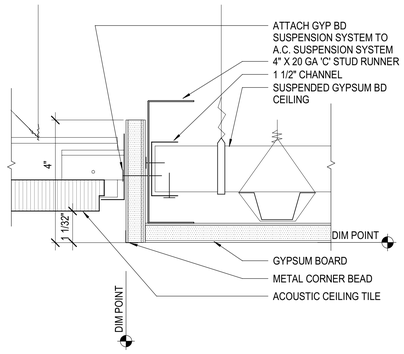

SUSPENDED GYPSUM BOARD CEILING TO ACOUSTIC CEILING TRANSITION - OFFSET
15 A9.11
SCALE: 6" = 1'-0"

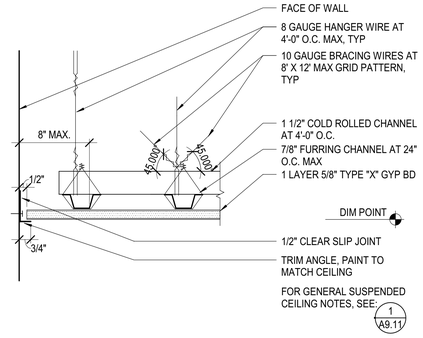

11 A9.11 FREE END OF SUSPENDED GYPSUM BOARD CEILING ASSEMBLY
SCALE: 3" = 1'-0"

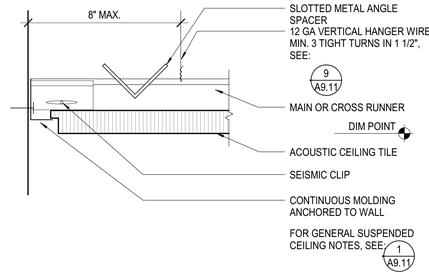

7 A9.11 FREE END OF ACOUSTICAL CEILING
SCALE: 6" = 1'-0"

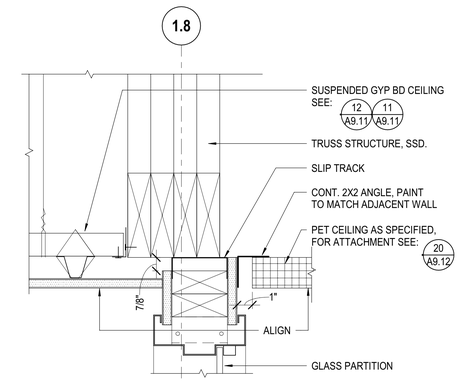

18 A9.11 CEILING TRANSITION AT GLAZING
SCALE: 3" = 1'-0"

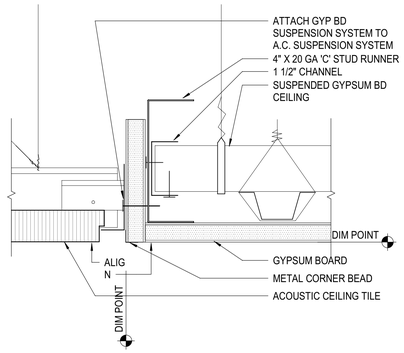

SUSPENDED GYPSUM BOARD CEILING TO ACOUSTIC CEILING TRANSITION
14 A9.11
SCALE: 6" = 1'-0"

COMPRESSION STRUT TABLE

MAX. HEIGHT	STRUT MATERIAL	R	L/R MAX
UP TO 4'-0"	1 1/2" C.R. CHANNEL	.248	193
UP TO 10'-0"	20 GA 2-1/2" MTL STUD	.448	187
UP TO 14'-0"	18 GA 3-5/8" MTL STUD	.624	180

NOTE:
COMPRESSION STRUTS: STEEL SECTION W/ L/R 200 MAX. STRUTS SHALL NOT REPLACE HANGER WIRE.

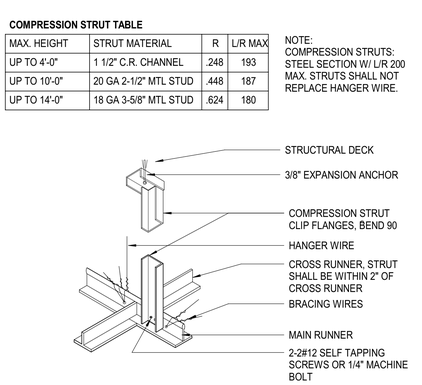

10 A9.11 ISOMETRIC/ELEVATION @THRUST STRUT
SCALE: 6" = 1'-0"

COMPRESSION STRUT TABLE

MAX. HEIGHT	STRUT MATERIAL	R	L/R MAX
UP TO 4'-0"	3/4" DIA. EMT	.248	193
UP TO 10'-0"	20 GA 2-1/2" MTL STUD	.448	187
UP TO 14'-0"	18 GA 3-5/8" MTL STUD	.624	180

NOTE:
COMPRESSION STRUTS: STEEL SECTION W/ L/R 200 MAX. ATTACH STRUTS TO MAIN RUNNER W/ 1/4"MACHINE BOLT. STRUTS SHALL NOT REPLACE HANGER WIRE.

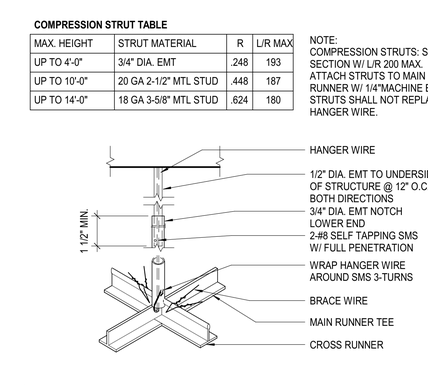

6 A9.11 ISOMETRIC/ELEVATION @THRUST STRUT
SCALE: 6" = 1'-0"

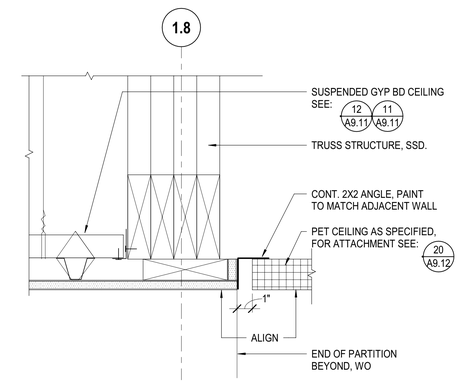

17 A9.11 GYP. TO PET CEILING TRANSITION
SCALE: 3" = 1'-0"

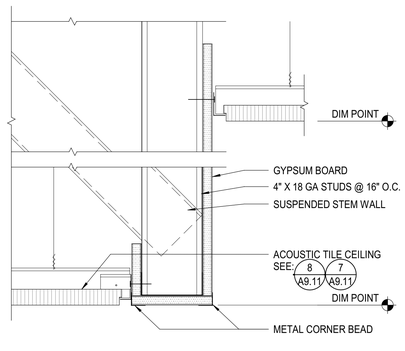

13 A9.11 GYPSUM BOARD SOFFIT @ ACOUSTIC CEILING
SCALE: 3" = 1'-0"

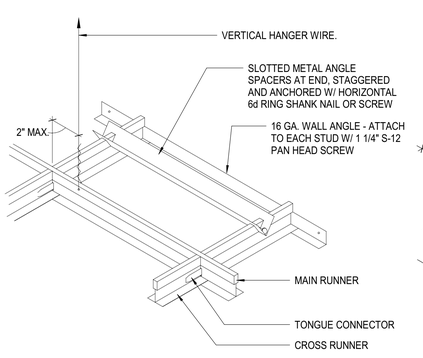

9 A9.11 ACOUSTIC CEILING SUSPENSION DETAIL
SCALE: 3" = 1'-0"

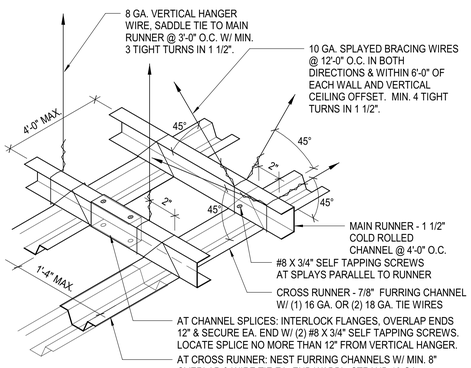

5 A9.11 GYPSUM BOARD CEILING SUSPENSION DETAIL
SCALE: 12" = 1'-0"

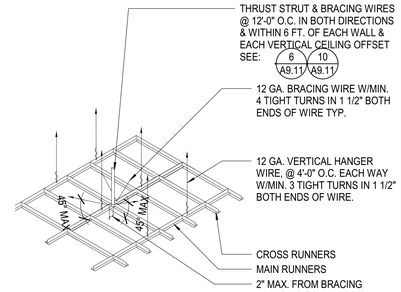

1 A9.11 ATTACHMENT FOR ACOUSTIC CEILING GRID
SCALE: 3" = 1'-0"

CEILING GENERAL NOTES

1) 12 GA HANGER WIRES MAY (8 GA AT SUSPENDED GYPSUM BOARD CEILING) BE USED FOR UP TO AND INCLUDING 4'-0" x 4'-0" GRID SPACING AND SHALL BE ATTACHED TO MAIN RUNNERS.

2) PROVIDE 12 GA HANGER WIRES (8 GA AT SUSPENDED GYPSUM BOARD CEILING) AT THE ENDS OF ALL MAIN AND CROSS RUNNERS WITHIN 8" OF THE SUPPORT OR WITHIN 1/4 OF THE LENGTH OF THE END TEE, WHICHEVER IS LEAST, FOR THE PERIMETER OF THE CEILING AREA.

3) PROVIDE TRAPEZE OR OTHER SUPPLEMENTARY SUPPORT MEMBERS AT OBSTRUCTIONS TO TYPICAL HANGER SPACING. PROVIDE ADDITIONAL HANGERS, STRUTS OR BRACES AS REQUIRED AT ALL CEILING BREAKS, SOFFITS OR DISCONTINUOUS AREAS. HANGER WIRES THAT ARE MORE THAN 1 IN 6 OUT OF PLUMB SHALL HAVE COUNTER-SLOPING WIRES.

4) CEILING GRID MEMBERS MAY BE ATTACHED TO NOT MORE THAN TWO(2) ADJACENT WALLS. CEILING FRID MEMBERS SHALL BE AT LEAST 3/4 INCH FREE OF OTHER WALLS. IF WALLS RUN DIAGONALLY TO CEILING GRID SYSTEM RUNNERS, ONE END OF MAIN AND CROSS RUNNERS SHOULD BE FREE AND A MINIMUM OF 3/4" CLEAR OF WALL.

5) AT THE PERIMETER OF THE CEILING AREA WHERE MAIN OR CROSS RUNNERS ARE NOT CONNECTED TO THE ADJACENT WALL, PROVIDE INTERCONNECTION BETWEEN THE RUNNERS AT THE FREE END TO PREVENT LATERAL SPREADING. A METAL STRUT OR A 16 GA WIRE WITH A POSITIVE MECHANICAL CONNECTION TO THE RUNNER MAY BE USED. WHERE THE PERPENDICULAR DISTANCE FROM THE WALL TO THE FIRST PARALLEL RUNNER IS 12" OR LESS, THIS INTERLOCK IS NOT REQUIRED.

6) PROVIDE LATERAL FORCE BRACING FOR CEILING AREAS GREATER THAN 1000 SF IN SEISMIC DESIGN ZONES D, E & F AS REQUIRED BY ASTM E580. HORIZONTAL RESTRAINTS SHALL BE EFFECTED BY FOUR NO. 12 GAUGE (2.70 MM) WIRES SECURED TO THE MAIN RUNNER WITHIN 2 INCHES (50 MM) OF THE CROSS RUNNER INTERSECTION AND SPLAYED 90 DEGREES FROM EACH OTHER AT AN ANGLE NOT EXCEEDING 45 DEGREES FROM THE PLANE OF THE CEILING. A STRUT FASTENED TO THE MAIN RUNNER AT THE LOCATION OF THE BRACING WIRES SHALL BE EXTENDED TO AND FASTENED TO THE STRUCTURAL MEMBERS SUPPORTING THE ROOF OR THE FLOOR ABOVE. THE STRUT SHALL BE ADEQUATE TO RESIST THE VERTICAL FORCE INDUCED BY THE BRACING WIRES. THESE HORIZONTAL RESTRAINT POINTS SHALL BE PLACED 12 FT (3600 MM) ON CENTER IN DIRECTIONS WITH THE FIRST POINT WITHIN 6 FT (1800 MM) FROM EACH WALL. WIRES SHALL BE TAUT WITHOUT CAUSING THE CEILING TO LIFT. SPLICES IN WIRES ARE NOT ALLOWED WITHOUT APPROVAL OF THE AUTHORITY HAVING JURISDICTION.

7) FASTEN HANGER WIRES WITH NOT LESS THAN 3 TIGHT TURNS. FASTER BRACING WIRES WITH 4 TIGHT TURNS, MAKE ALL TIGHT TURNS WITHIN A DISTANCE OF 1-1/2". HANGER OR BRACING WIRE ANCHORS TO THE STRUCTURE SHOULD BE INSTALLED IN SUCH A MANNER THAT THE DIRECTION OF THE WIRE ALIGNS AS CLOSELY AS POSSIBLE WITH THE DIRECTION OF THE FORCES ACTING ON THE WIRE.

8) SEPARATE ALL CEILING HANGING AND BRACING WIRES AT LEAST 6" FROM ALL UNBRACED DUCTS, PIPES CONDUIT, ETC. IT IS ACCEPTABLE TO ATTACH LIGHT WEIGHT ITEMS SUCH AS SINGLE ELECTRICAL CONDUIT NOT EXCEEDING 3/4" NOMINAL DIAMETER, TO HANGER WIRES USING CONNECTORS ACCEPTABLE TO AUTHORITY HAVING JURISDICTION.

9) WHEN DRILLED-IN CONCRETE ANCHORS ARE USED FOR HANGER WIRES, 1 OUT OF 10 MUST BE FIELD TESTED FOR 200 LBS. OF TENSION. WHEN DRILLED-IN CONCRETE ANCHORS ARE USED FOR BRACING WIRES, 1 OUT OF 2 MUST BE FIELD TESTED FOR 440 LBS. OF TENSION. SHOT-IN ANCHORS ARE NOT PERMITTED. IF ANY DRILLED-IN ANCHOR FAILS, SEE CBC SECTION 1923A.3.5

10) ATTACH ALL LIGHT FIXTURES OR SERVICES TO THE CEILING GRID RUNNERS TO RESIST A HORIZONTAL FORCE EQUAL TO THE WEIGHT OF THE FIXTURES. SCREWS OR APPROVED FASTENERS ARE REQUIRED.

11) FLUSH OR RECESSED LIGHT FIXTURES OR SERVICES WEIGHING LESS THAN 56 LBS. MAY BE SUPPORTED DIRECTLY ON THE RUNNERS OF A HEAVY DUTY GRID SYSTEM, BUT IN ADDITION, THEY MUST HAVE A MINIMUM OF TWO(2) 12 GA SLACK SAFETY WIRES ATTACHED TO THE FIXTURE AT DIAGONAL CORNERS AND ANCHORED TO THE STRUCTURE ABOVE.

ALL FLUSH OR RECESSED LIGHT FIXTURES OR SERVICES WEIGHING 56 LBS. OR MORE MUST BE INDEPENDENTLY SUPPORTED BY NOT LESS THAN 4 TAUT 12 GA WIRES, EACH ATTACHED TO THE FIXTURE AND TO THE STRUCTURE ABOVE REGARDLESS OF THE TYPE OF CEILING GRID SYSTEM USED.

THE FOUR(4) TAUT 12 GA WIRES INCLUDING THEIR ATTACHMENT TO THE STRUCTURE ABOVE MUST BE CAPABLE OF SUPPORTING 4 TIMES THE WEIGHT OF THE UNIT.

12) ALL FIXTURES AND AIR TERMINALS OR SERVICES SUPPORTED ON INTERMEDIATE DUTY GRID SYSTEMS MUST BE INDEPENDENTLY SUPPORTED BY NOT LESS THAN FOUR(4) TAUT 12 GA WIRES, EACH ATTACHED TO THE FIXTURE OR TERMINAL AND TO THE STRUCTURE ABOVE.

13) SUPPORT SURFACE MOUNTED LIGHT FIXTURES BY AT LEAST TWO POSITIVE DEVICES WHICH SURROUND THE CEILING RUNNER AND WHICH ARE EACH SUPPORTED FROM THE STRUCTURE ABOVE BY A 12 GAGE WIRE. SPRING CLIPS OR CLAMPS THAT CONNECT ONLY TO THE RUNNER ARE NOT ACCEPTABLE. PROVIDE ADDITIONAL SUPPORTS WHEN LIGHT FIXTURES ARE 8'-0" OR LONGER.

14) SUPPORT PENDANT MOUNTED LIGHT FIXTURES DIRECTLY FROM THE STRUCTURE ABOVE WITH HANGER WIRES OR CABLES PASSING THROUGH EACH PENDANT HANGER AND CAPABLE OF SUPPORTING FOUR TIMES THE WEIGHT OF THE FIXTURE.

15) LAY-IN CEILING ASSEMBLIES IN EXITWAYS SHALL BE INSTALLED WITH A MAIN RUNNER OR CROSS RUNNER SURROUNDING ALL SIDES OF EACH PIECE OF TILE BOARD OF PANEL, AND EACH LIGHT FIXTURE OR FRILL SPLICES AND INTERSECTIONS OF SUCH RUNNERS SHALL BE ATTACHED WITH THROUGH CONNECTORS SUCH AS POP-RIVETS, SCREWS, PINS OR PLATES WITH BENT TABS. EXPANSION JOINTS SHALL BE PROVIDED IN THE CEILING AT THE INTERSECTIONS OF CORRIDORS AND AT JUNCTIONS OF CORRIDORS AND LOBBIES, OR OTHER SIMILAR AREAS.

Division of the State Architect

APPROVED
DIV. OF THE STATE ARCHITECT
APP: 02-119316 INC:
REVIEWED FOR
SS☐ FLS☐ ACS☑
DATE: 03/24/2022

Office of the State Fire Marshal

OFFICE OF THE STATE FIRE MARSHAL
APPROVED FIRE AND PANIC ONLY
03/14/22
21-0498
Approval of this plan does not authorize or approve any omission or deviation from applicable requirements. Final approval is subject to field inspection. One set of approved plans shall be available on the project site at all times.

CSUS CHILD DEVELOPMENT CENTER

CALIFORNIA STATE UNIVERSITY, STANISLAUS
ONE UNIVERSITY CIRCLE
TURLOCK, CA 95382

ehdd.
PIER 1, BAY 2
THE EMBARCADERO
SAN FRANCISCO, CA 94111
INFO@EHDD.COM
+1 415-285-9193

Consultant

Stamp

LICENSED ARCHITECT
JENNIFER K DEVLIN
No. C-17341
Ren. 5-31-23
STATE OF CALIFORNIA

Printing	Date
95% CONSTRUCTION DOCUMENTS	06.25.2021
PERMIT SET	08.16.2021
PERMIT SET - DSA V2	12.15.2021
PERMIT SET - SFM	12.21.2021

Revisions and Description	Date

Scale
As indicated

Drawn by
Author

EHDD Job Number
20020

Sheet Title
TYPICAL CEILING DETAILS

Sheet Number
A9.11 V3

C:\Users\ljquinones\OneDrive - EHDD\Documents\20020-A-CSU STANISLAUS CDC- CENTRAL_ljquinones.rvt

12/10/2021 9:35:51 AM

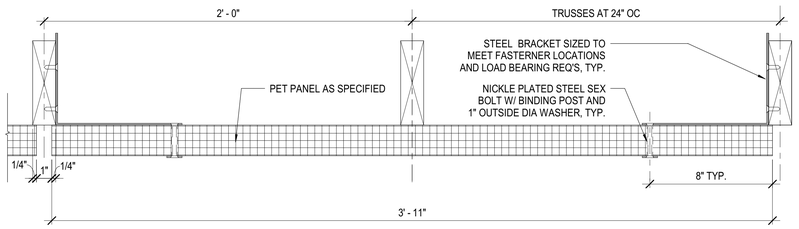

20 A9.12 SECTION AT FASTENERS FOR PET PANELS
SCALE: 3" = 1'-0"

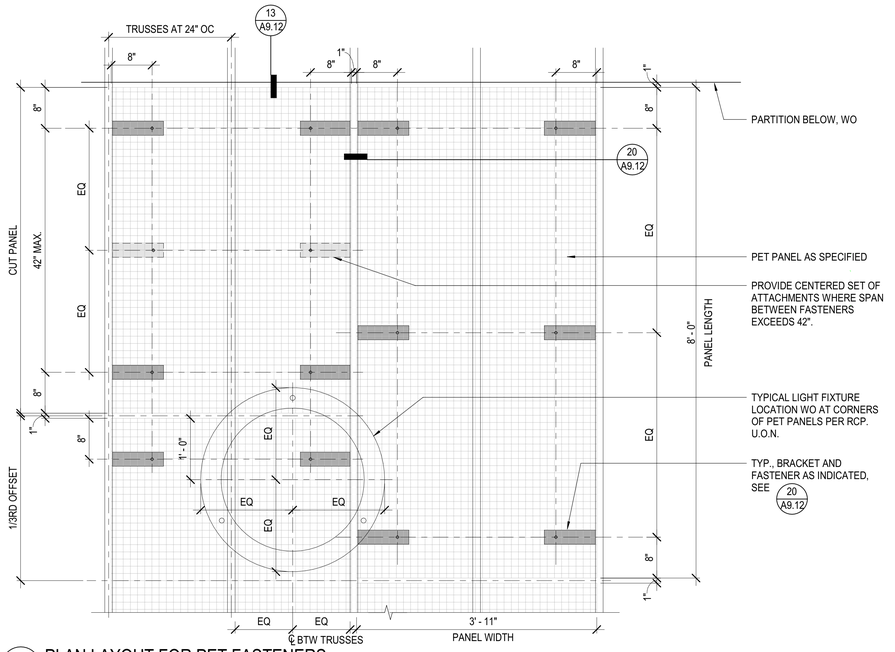

19 A9.12 PLAN LAYOUT FOR PET FASTENERS
SCALE: 1" = 1'-0"

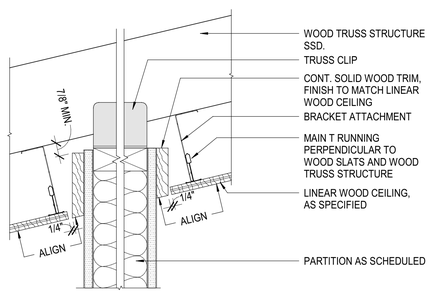

@ WALL PERPENDICULAR TO TRUSS

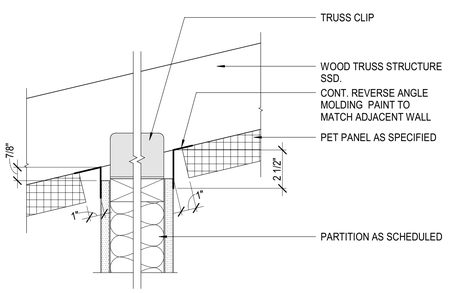

@ WALL PERPENDICULAR TO TRUSS

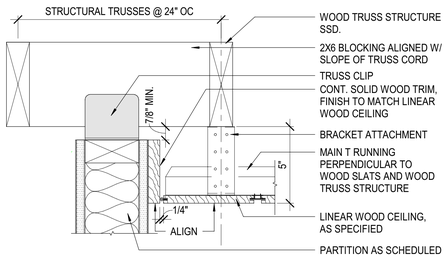

@ WALL PARALLEL TO TRUSS

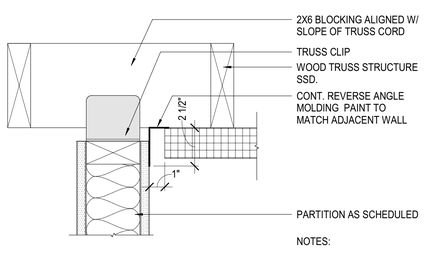

@ WALL PARALLEL TO TRUSS

17 A9.12 WOOD CEILING AT WALL
SCALE: 3" = 1'-0"

13 A9.12 PET CEILING AT WALL
SCALE: 3" = 1'-0"

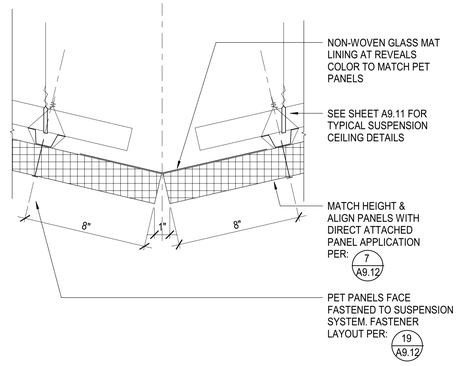

12 A9.12 SUSP PET PANEL SLOPE TRANSITION
SCALE: 3" = 1'-0"

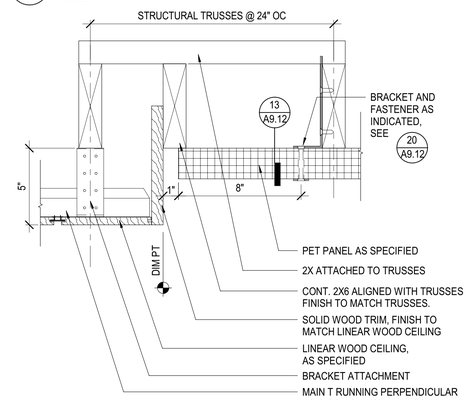

11 A9.12 WOOD CEILING AT PET PANEL
SCALE: 3" = 1'-0"

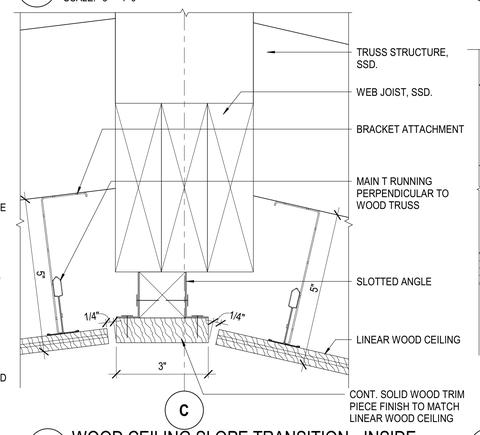

10 A9.12 WOOD CEILING SLOPE TRANSITION - INSIDE
SCALE: 6" = 1'-0"

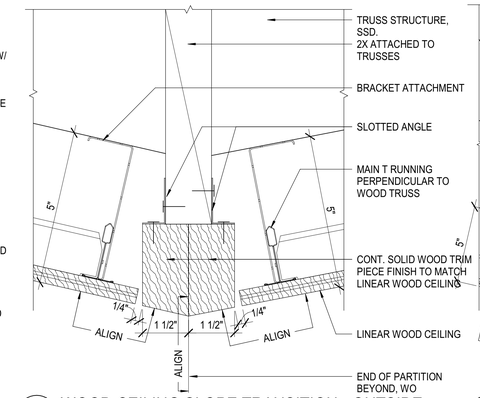

9 A9.12 WOOD CEILING SLOPE TRANSITION - OUTSIDE
SCALE: 6" = 1'-0"

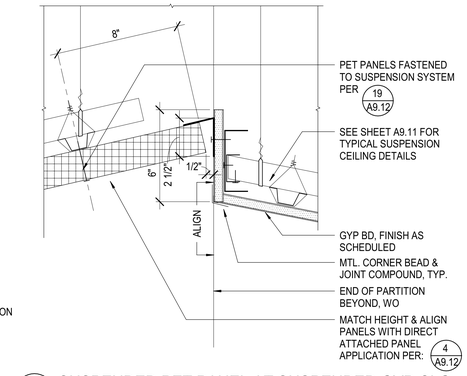

8 A9.12 SUSPENDED PET PANEL AT SUSPENDED GYP CLG
SCALE: 3" = 1'-0"

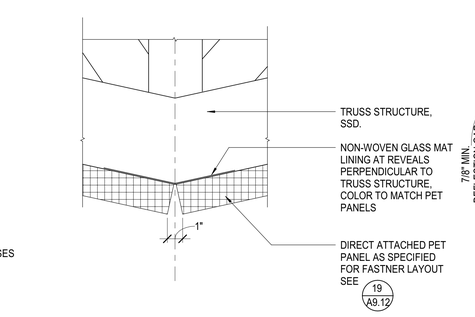

7 A9.12 DIR. ATTACHED PET PANEL SLOPE TRANSITION
SCALE: 3" = 1'-0"

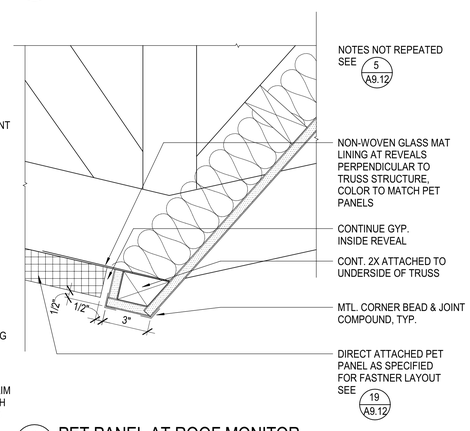

6 A9.12 PET PANEL AT ROOF MONITOR
SCALE: 3" = 1'-0"

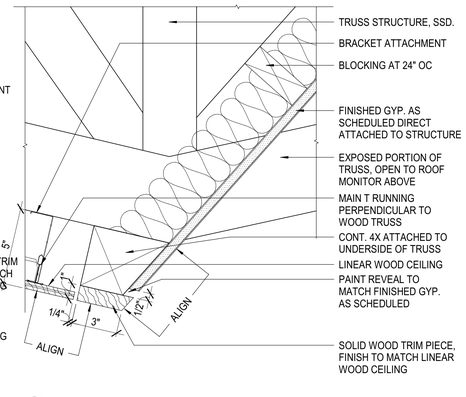

5 A9.12 WOOD CEILING AT ROOF MONITOR - 2
SCALE: 3" = 1'-0"

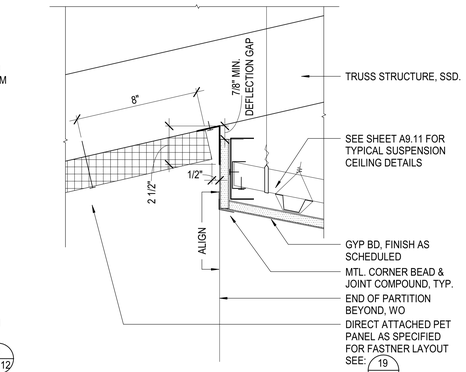

3 A9.12 PET TO GYP. CLG TRANSITION
SCALE: 3" = 1'-0"

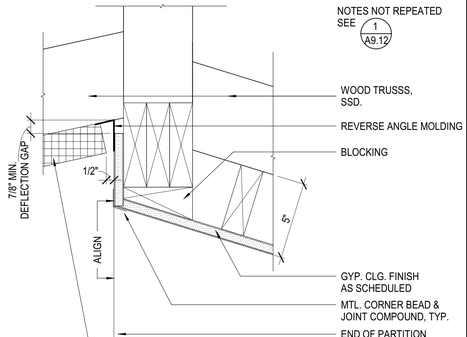

4 A9.12 PET PANEL AT SUSPENDED GYP CLG
SCALE: 3" = 1'-0"

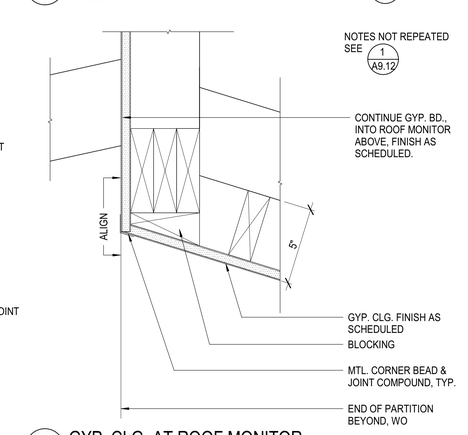

2 A9.12 GYP. CLG. AT ROOF MONITOR
SCALE: 3" = 1'-0"

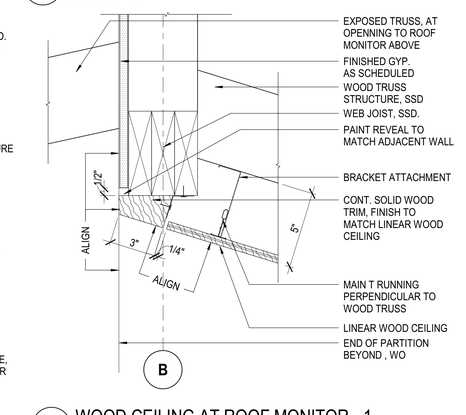

1 A9.12 WOOD CEILING AT ROOF MONITOR - 1
SCALE: 3" = 1'-0"

C:\Users\l.quinones\OneDrive - EHDD\Documents\20020-A-CSU STANISLAUS CDC- CENTRAL_l.quinones.rvt

Division of the State Architect

APPROVED
DIV. OF THE STATE ARCHITECT
APP: 02-119316 INC:
REVIEWED FOR
SS☐ FLS☐ ACS☑
DATE: 03/24/2022

Office of the State Fire Marshal

OFFICE OF THE STATE FIRE MARSHAL
APPROVED FIRE AND PANIC ONLY
03/14/22
21-0498
Approval of this plan does not authorize or approve any omission or deviation from applicable requirements. Final approval is subject to field inspection. One set of approved plans shall be available on the project site at all times.

CSUS CHILD DEVELOPMENT CENTER

CALIFORNIA STATE UNIVERSITY, STANISLAUS
ONE UNIVERSITY CIRCLE
TURLOCK, CA 95382

PIER 1, BAY 2
THE EMBARCADERO
SAN FRANCISCO, CA 94111

INFO@EHDD.COM
+1 415-285-9193

Consultant

Stamp

LICENSED ARCHITECT
JENNIFER K DEVLIN
No. C-27844
Ren. 5-31-23
STATE OF CALIFORNIA

Printing	Date
95% CONSTRUCTION DOCUMENTS	06.25.2021
PERMIT SET	08.16.2021
PERMIT SET - DSA V2	12.15.2021
PERMIT SET - SFM	12.21.2021

Revisions and Description	Date

Scale
As indicated

Drawn by
Author

EHDD Job Number
20020

Sheet Title
CEILING DETAILS

Sheet Number
A9.12 V3

12/10/2021 9:35:55 AM

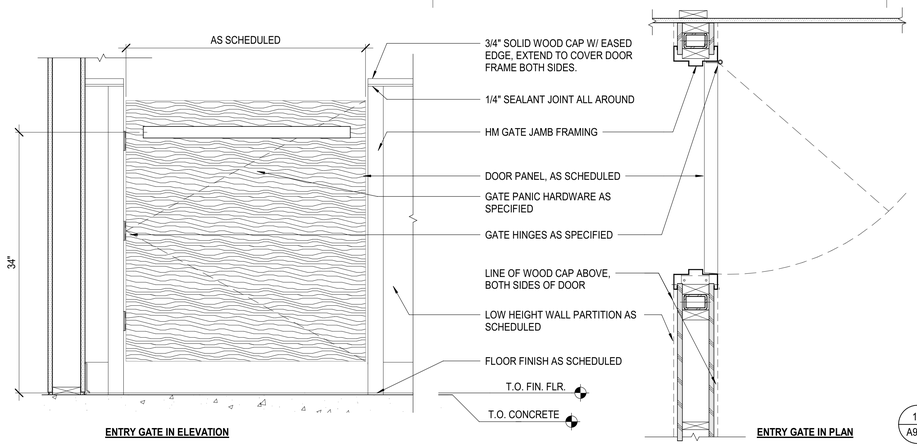

19 / A9.21 CHILDREN'S GATE AT RECEPTION 100 PLAN AND ELEVATION
SCALE: 1 1/2" = 1'-0"

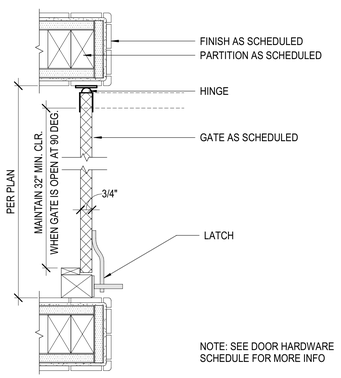

12 / A9.21 TYPICAL GATE JAMB AT CLASSROOM TOILETS
SCALE: 3" = 1'-0"

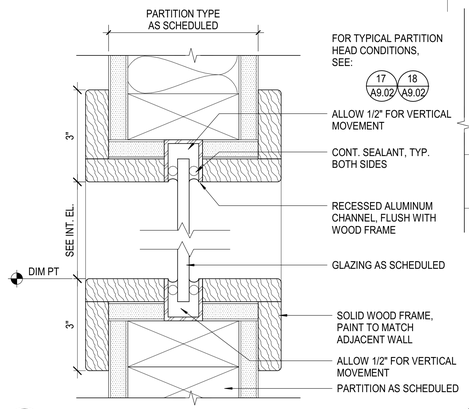

8 / A9.21 GLAZING AT WOOD FRAME HEAD & SILL (JAMB SIM)
SCALE: 6" = 1'-0"

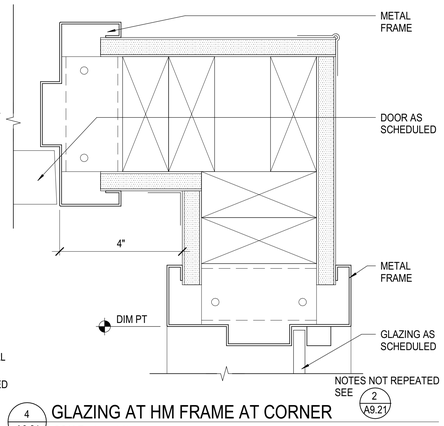

4 / A9.21 GLAZING AT HM FRAME AT CORNER
SCALE: 6" = 1'-0"

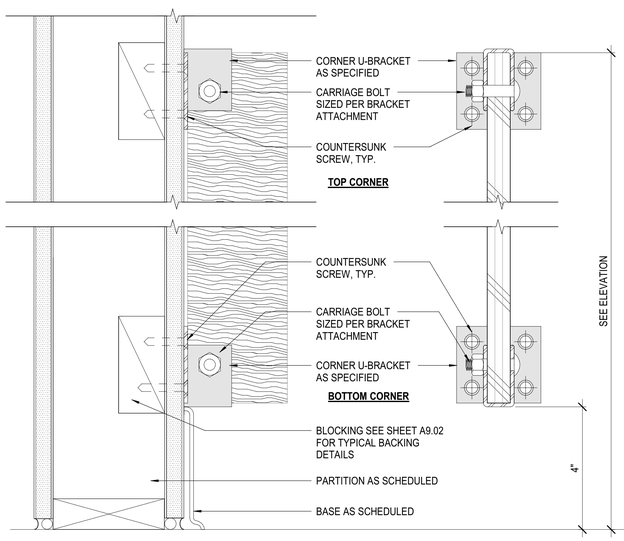

18 / A9.21 BRACKET ATTACHMENT AT CHILDREN'S GATES
SCALE: 6" = 1'-0"

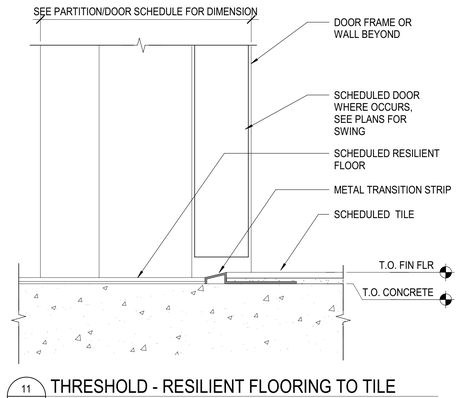

11 / A9.21 THRESHOLD - RESILIENT FLOORING TO TILE
SCALE: 6" = 1'-0"

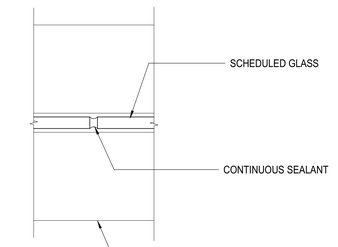

7 / A9.21 TYPICAL BUTT JOINT AT GLAZING
SCALE: 6" = 1'-0"

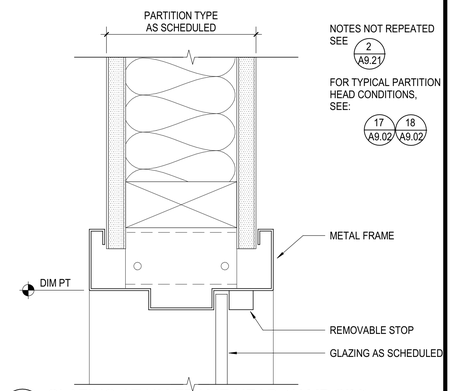

3 / A9.21 GLAZING AT HM FRAME HEAD (JAMB SIM)
SCALE: 6" = 1'-0"

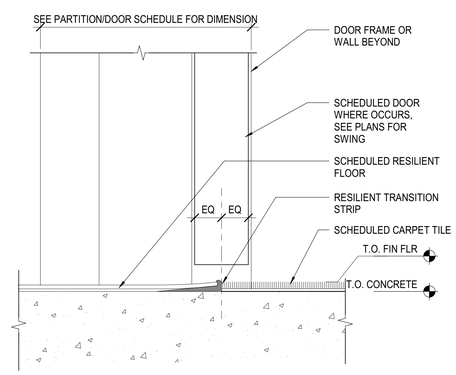

10 / A9.21 THRESHOLD - RESILIENT FLOORING TO CARPET
SCALE: 6" = 1'-0"

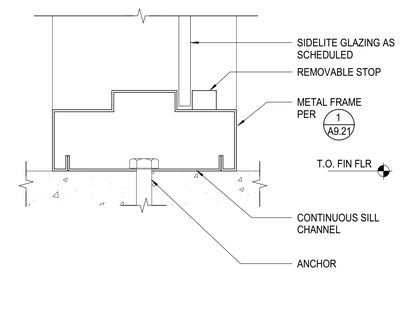

6 / A9.21 GLAZING AT HM SILL AT CONCRETE SLAB
SCALE: 6" = 1'-0"

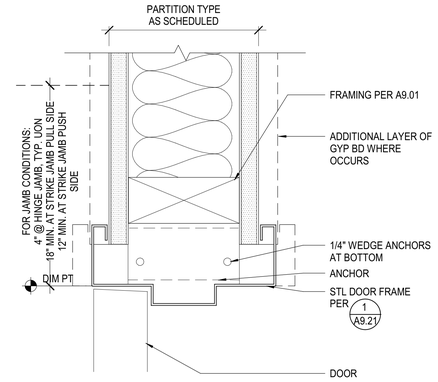

2 / A9.21 HM DOOR HEAD (JAMB SIM)
SCALE: 6" = 1'-0"

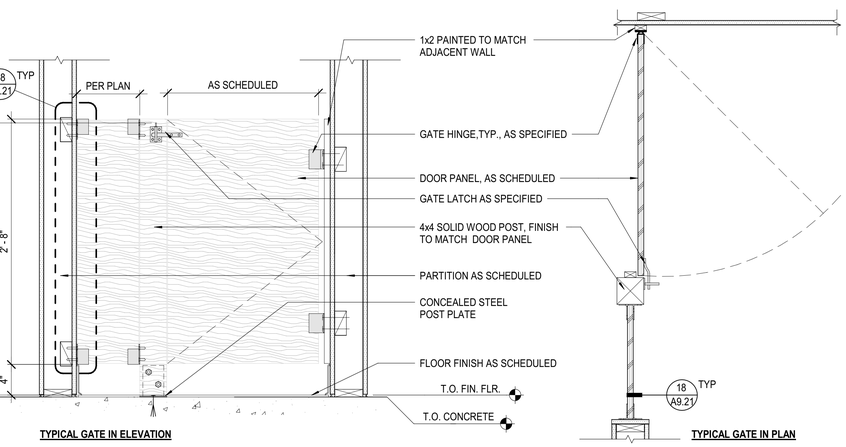

17 / A9.21 TYPICAL CHILDREN'S GATE PLAN AND ELEVATION
SCALE: 1 1/2" = 1'-0"

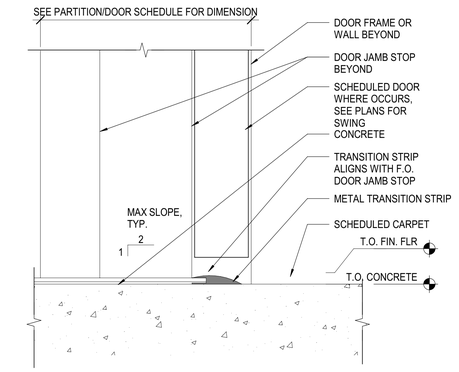

9 / A9.21 RESILIENT THRESHOLD - CONCRETE TO RESILIENT
SCALE: 6" = 1'-0"

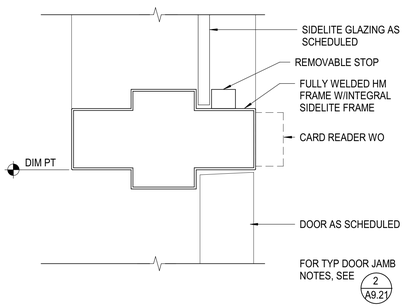

5 / A9.21 HM DOOR HEAD JAMB AT SIDELITE
SCALE: 6" = 1'-0"

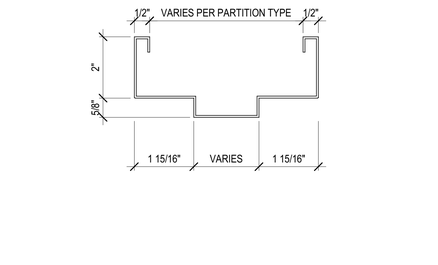

1 / A9.21 TYPICAL HM DOOR PROFILE
SCALE: 6" = 1'-0"

C:\Users\ quinones\OneDrive - EHDD\Documents\20020-A-CSU STANISLAUS CDC- CENTRAL_ quinones.rvt

Division of the State Architect

APPROVED
DIV. OF THE STATE ARCHITECT
APP: 02-119316 INC:
REVIEWED FOR
SS☐ FLS☐ ACS☑
DATE: 03/24/2022

Office of the State Fire Marshal

OFFICE OF THE STATE FIRE MARSHAL
APPROVED FIRE AND PANIC ONLY
03/14/22
21-0498
Approval of this plan does not authorize or approve any omission or deviation from applicable requirements. Final approval is subject to field inspection. One set of approved plans shall be available on the project site at all times.

CSUS CHILD DEVELOPMENT CENTER

CALIFORNIA STATE UNIVERSITY, STANISLAUS
ONE UNIVERSITY CIRCLE
TURLOCK, CA 95382

ehdd.

PIER 1, BAY 2
THE EMBARCADERO
SAN FRANCISCO, CA 94111

INFO@EHDD.COM
+1 415-285-9193

Consultant

Stamp

LICENSED ARCHITECT
JENNIFER K. DEVOE
No. C-34447
Ren. 5-31-23
STATE OF CALIFORNIA

Printing	Date
95% CONSTRUCTION DOCUMENTS	06.25.2021
PERMIT SET	08.16.2021
PERMIT SET - DSA V2	12.15.2021
PERMIT SET - SFM	12.21.2021

Revisions and Description	Date

Scale
As indicated

Drawn by
Author

EHDD Job Number
20020

Sheet Title
INTERIOR GLAZING AND DOOR DETAILS

Sheet Number
A9.21 V3

12/10/2021 9:35:58 AM

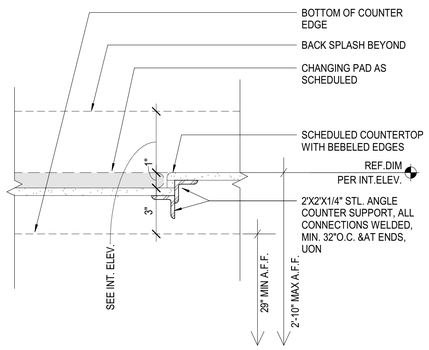

20 A9.31 CHANGING TO COUNTER TRANSITION
SCALE: 3" = 1'-0"

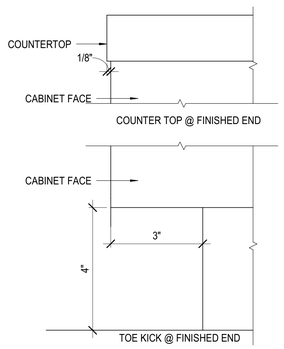

19 A9.31 TYPICAL EDGE DETAILS-TOE KICK & COUNTER TOP@FINISHED END
SCALE: 6" = 1'-0"

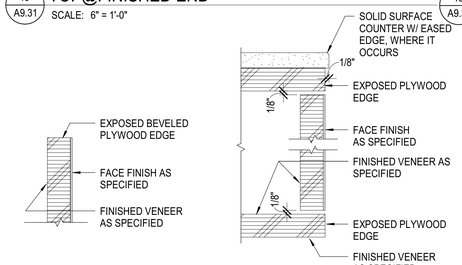

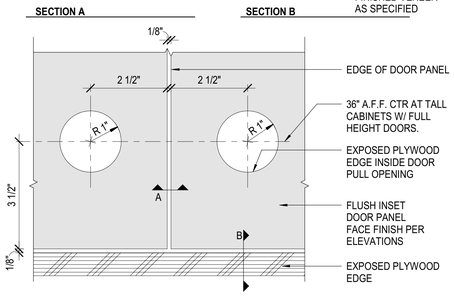

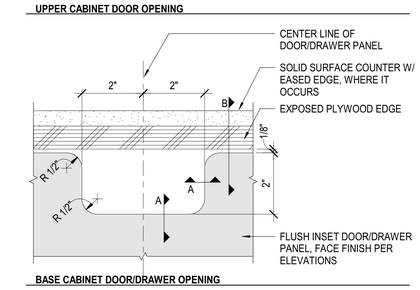

17 A9.31 TYPICAL DOOR/DRAWER OPENINGS & EDGE DTLS
SCALE: 6" = 1'-0"

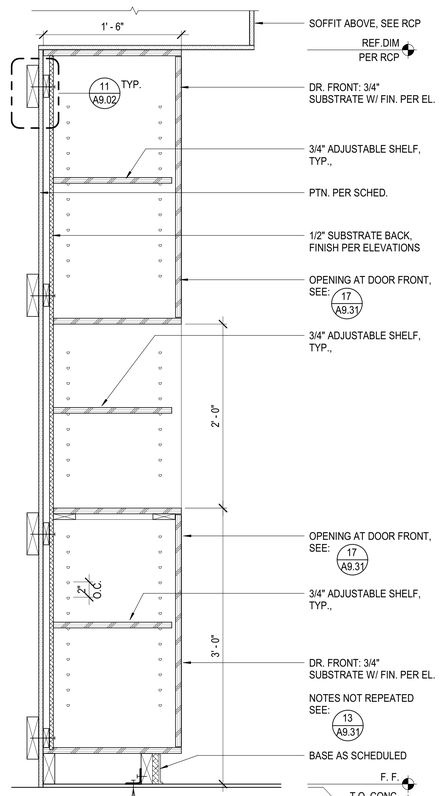

15 A9.31 TALL CABINET - INFANT CLASSROOM
SCALE: 1 1/2" = 1'-0"

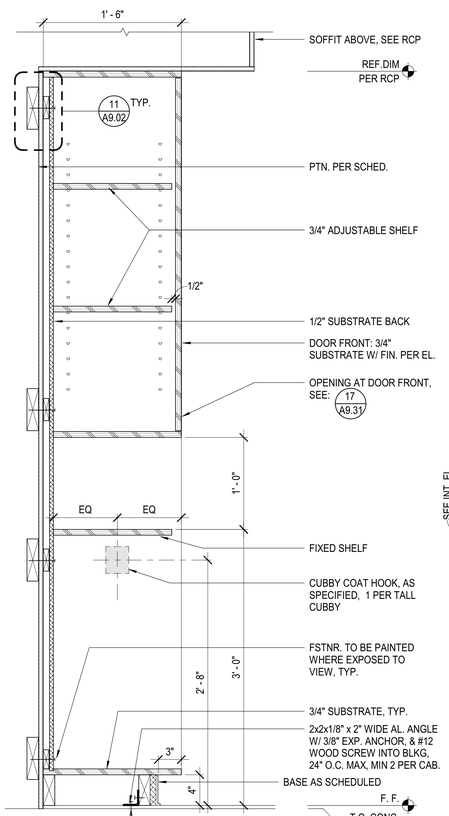

13 A9.31 TALL CABINET - TODDLER & PRE-K CLASSROOM
SCALE: 1 1/2" = 1'-0"

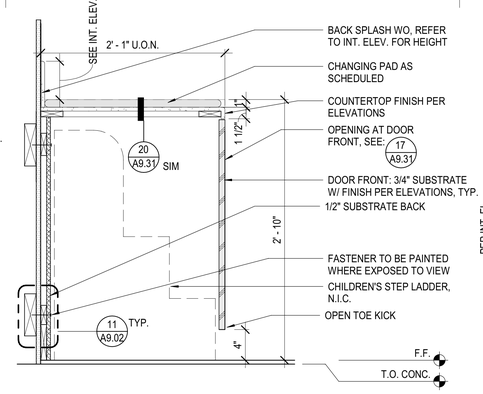

12 A9.31 CHANGING COUNTER WITH DOORS
SCALE: 1 1/2" = 1'-0"

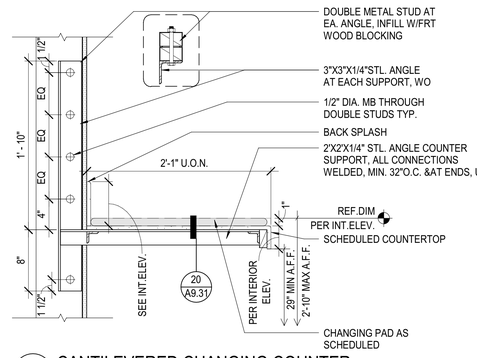

11 A9.31 CANTILEVERED CHANGING COUNTER
SCALE: 1 1/2" = 1'-0"

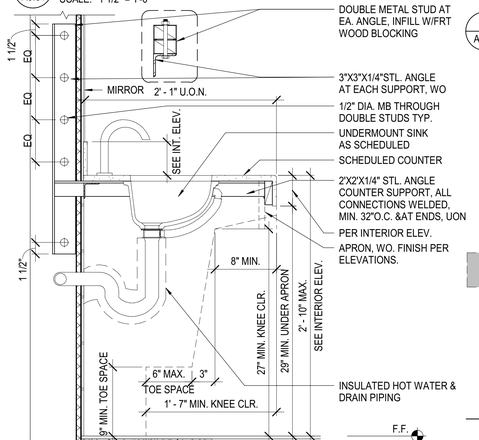

10 A9.31 INTEGRAL VANITY- CANTILEVERED
SCALE: 1 1/2" = 1'-0"

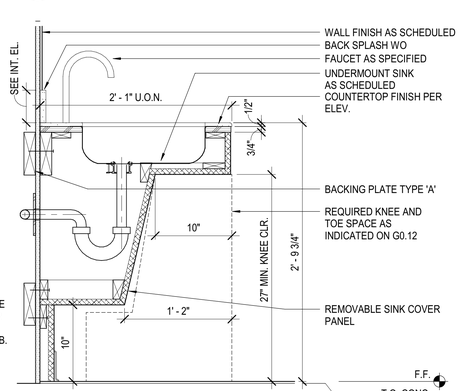

9 A9.31 TYPICAL KITCHEN SINK-W/ ADA ACCESS
SCALE: 1 1/2" = 1'-0"

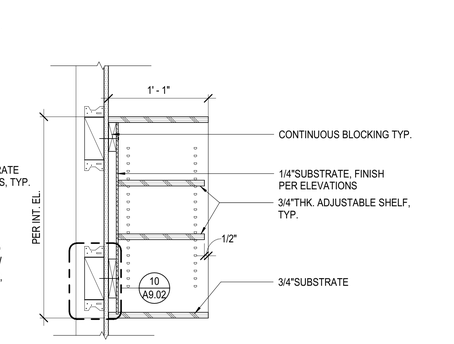

8 A9.31 OPEN UPPER CABINET
SCALE: 1 1/2" = 1'-0"

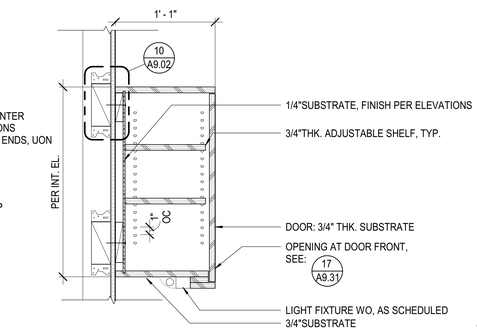

7 A9.31 TYPICAL UPPER CABINET
SCALE: 1 1/2" = 1'-0"

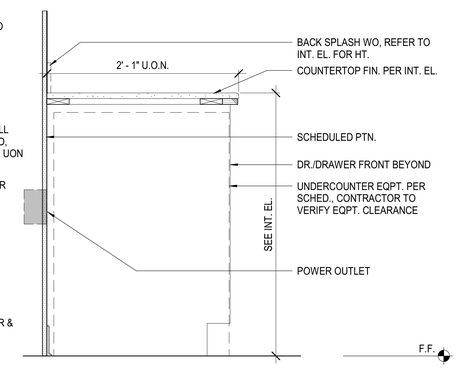

6 A9.31 CASEWORK AT UNDERCOUNTER EQPT.
SCALE: 1 1/2" = 1'-0"

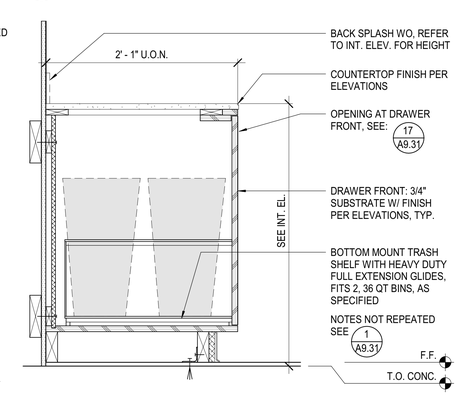

5 A9.31 TYPICAL BASE CABINET-4 DRAWERS
SCALE: 1 1/2" = 1'-0"

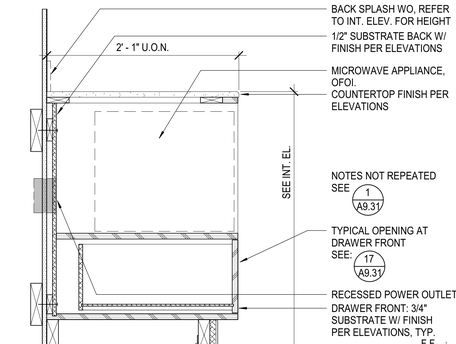

4 A9.31 TYPICAL MICROWAVE BASE CABINET
SCALE: 1 1/2" = 1'-0"

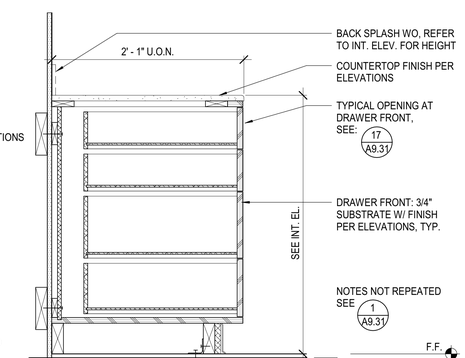

3 A9.31 TYPICAL BASE CABINET-4 DRAWERS
SCALE: 1 1/2" = 1'-0"

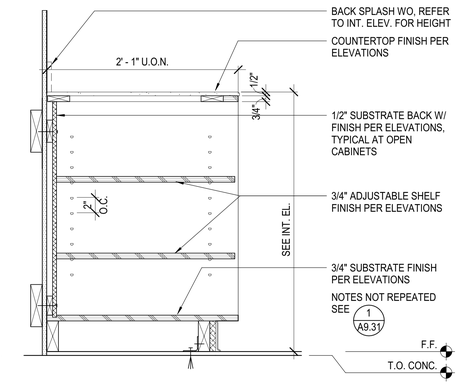

2 A9.31 OPEN BASE CABINET
SCALE: 1 1/2" = 1'-0"

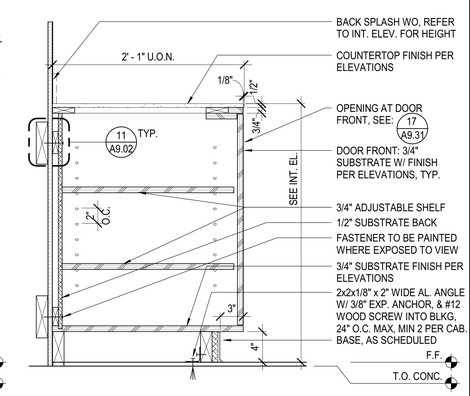

1 A9.31 TYPICAL BASE CABINET-NO DRAWER
SCALE: 1 1/2" = 1'-0"

C:\Users\l.quinones\OneDrive - EHDD\Documents\20020-A-CSU STANISLAUS CDC- CENTRAL_l.quinones.rvt

Division of the State Architect

APPROVED
DIV. OF THE STATE ARCHITECT
APP: 02-119316 INC:
REVIEWED FOR
SS☐ FLS☐ ACS☑
DATE: 03/24/2022

Office of the State Fire Marshal

OFFICE OF THE STATE FIRE MARSHAL
APPROVED FIRE AND PANIC ONLY
03/14/22
21-0498
Approval of this plan does not authorize or approve any omission or deviation from applicable regulations. Final approval is subject to field inspection. One set of approved plans shall be available on the project site at all times.

CSUS CHILD DEVELOPMENT CENTER

CALIFORNIA STATE UNIVERSITY, STANISLAUS
ONE UNIVERSITY CIRCLE
TURLOCK, CA 95382

ehdd.

PIER 1, BAY 2
THE EMBARCADERO
SAN FRANCISCO, CA 94111

INFO@EHDD.COM
+1 415-285-9193

Consultant

Stamp

LICENSED ARCHITECT
JENNIFER K DEVLIN
No. C-17341
Ren. 5-31-23
STATE OF CALIFORNIA

Printing	Date
95% CONSTRUCTION DOCUMENTS	06.25.2021
PERMIT SET	08.16.2021
PERMIT SET - DSA V2	12.15.2021
PERMIT SET - SFM	12.21.2021

Revisions and Description	Date

Scale
As indicated

Drawn by
Author

EHDD Job Number
20020

Sheet Title
TYPICAL CASEWORK DETAILS

Sheet Number
A9.31 V3

12/10/2021 9:36:02 AM

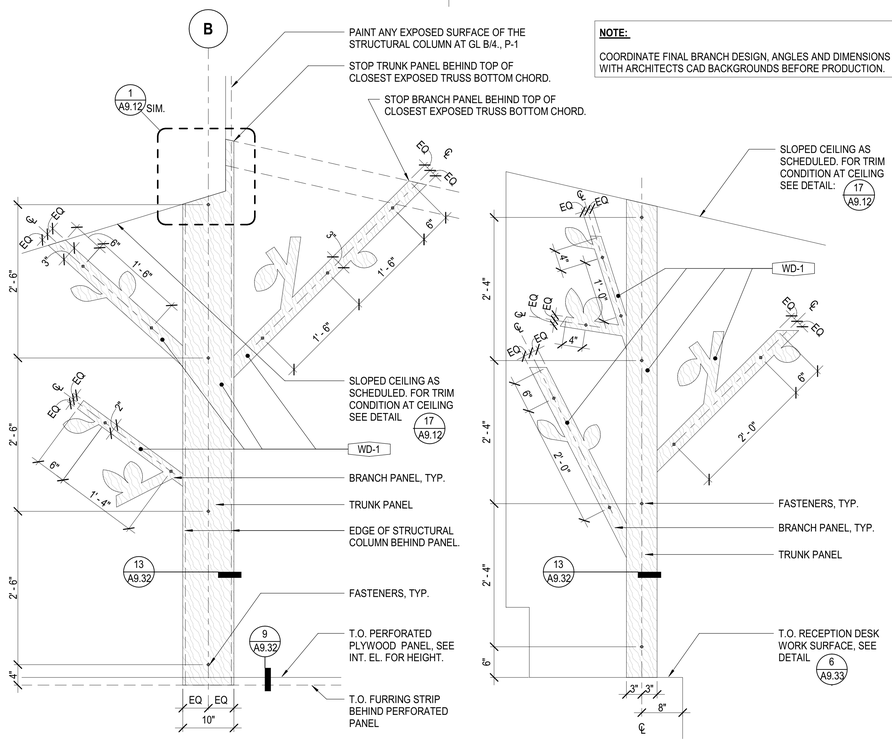

NOTE:

COORDINATE FINAL BRANCH DESIGN, ANGLES AND DIMENSIONS WITH ARCHITECTS CAD BACKGROUNDS BEFORE PRODUCTION.

19 A9.32 ENLARGED ELEVATION - SURFACE APPLLIED PLYWOOD TREES

SCALE: 1" = 1'-0"

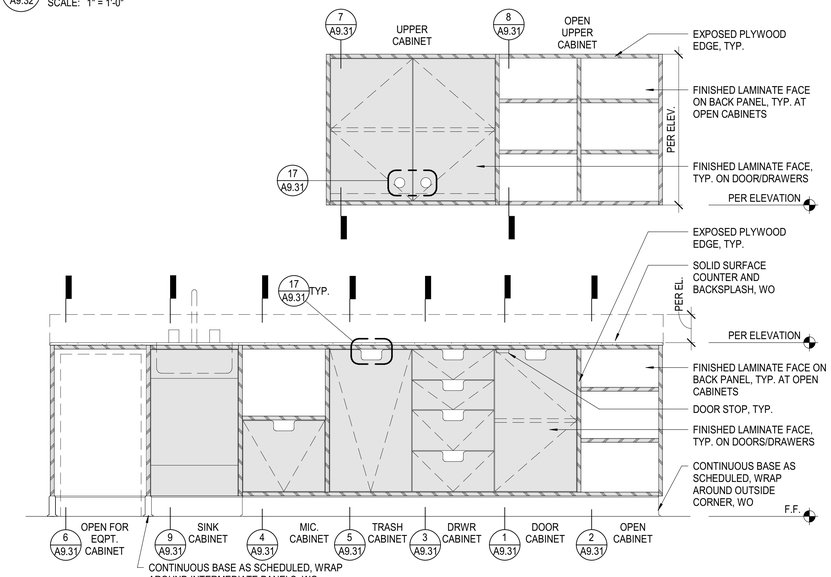

18 A9.32 ENLARGED TYPICAL CABINET ELEVATION

SCALE: 1" = 1'-0"

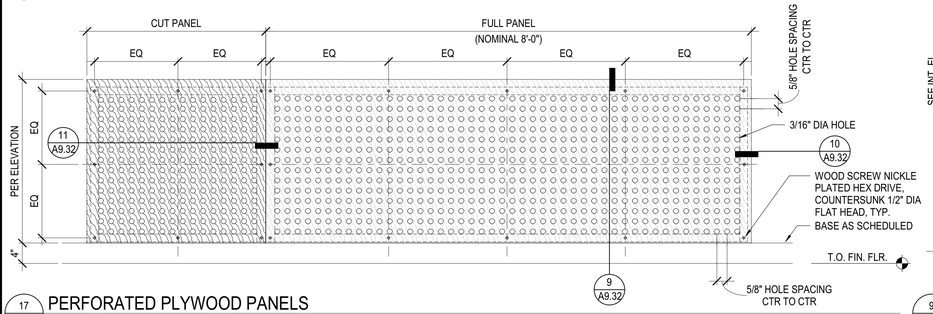

17 A9.32 PERFORATED PLYWOOD PANELS

SCALE: 1" = 1'-0"

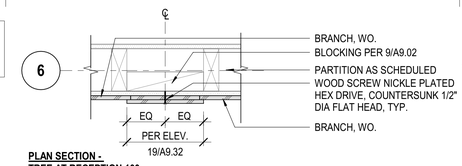

PLAN SECTION - TREE AT RECEPTION 100

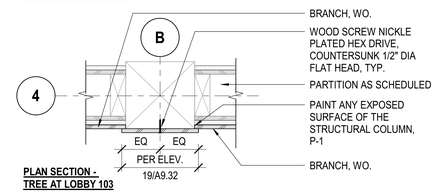

PLAN SECTION - TREE AT LOBBY 103

13 A9.32 SECTIONS AT PLYWOOD TREES

SCALE: 1 1/2" = 1'-0"

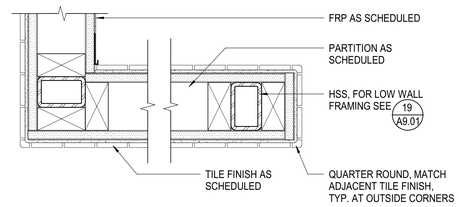

12 A9.32 PLAN SECTION AT STAFF KITCHEN TILED LOW WALL

SCALE: 3" = 1'-0"

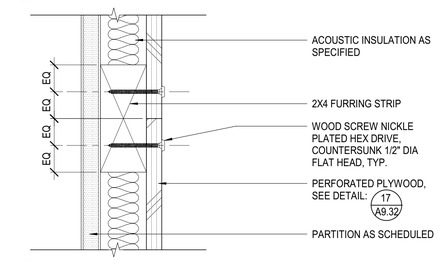

11 A9.32 PERFORATED PLWYOOD PANEL SEAM SECTION

SCALE: 6" = 1'-0"

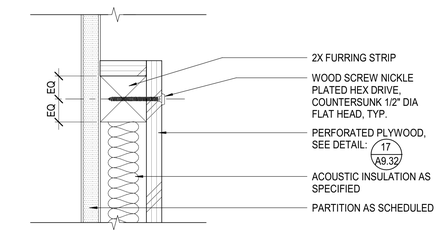

10 A9.32 PERFORATED PLWYOOD PANEL EDGE SECTION

SCALE: 6" = 1'-0"

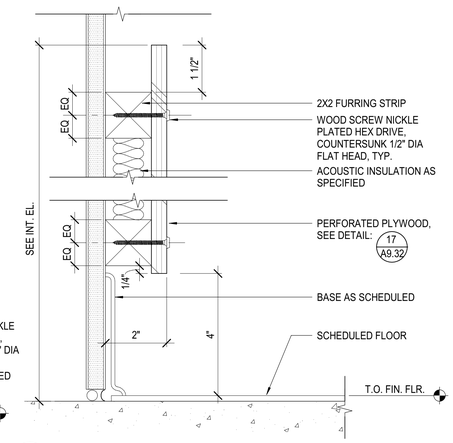

9 A9.32 PERFORATED PLWYOOD PANEL SECTION

SCALE: 6" = 1'-0"

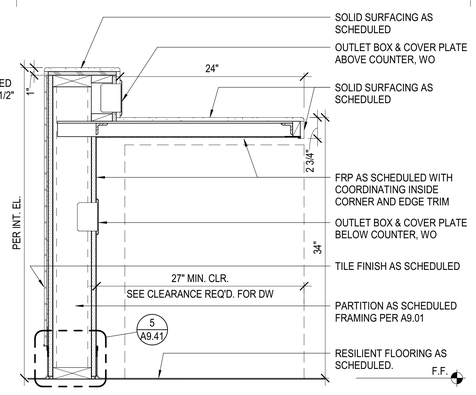

8 A9.32 SECTION AT KITCHEN COUNTER

SCALE: 1 1/2" = 1'-0"

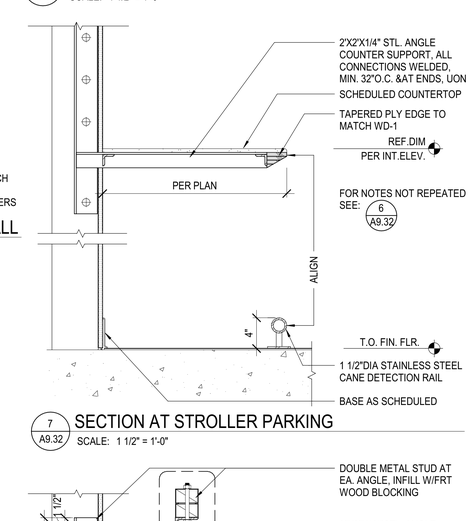

7 A9.32 SECTION AT STROLLER PARKING

SCALE: 1 1/2" = 1'-0"

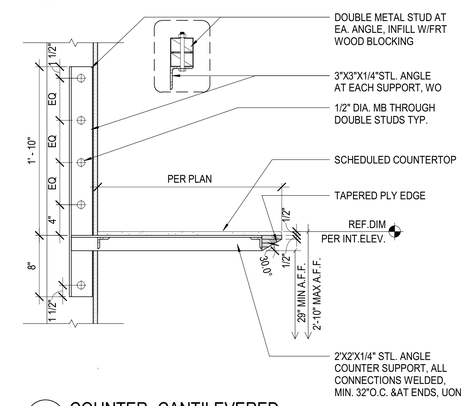

6 A9.32 COUNTER- CANTILEVERED

SCALE: 1 1/2" = 1'-0"

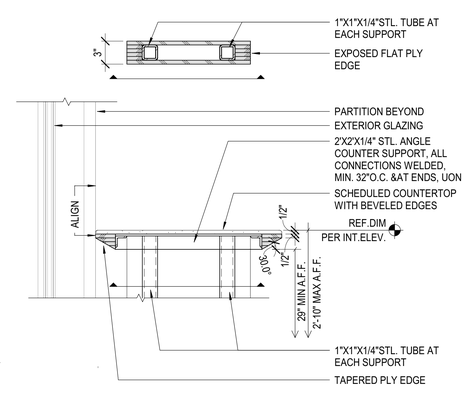

5 A9.32 COUNTER- CANTILEVERED

SCALE: 1 1/2" = 1'-0"

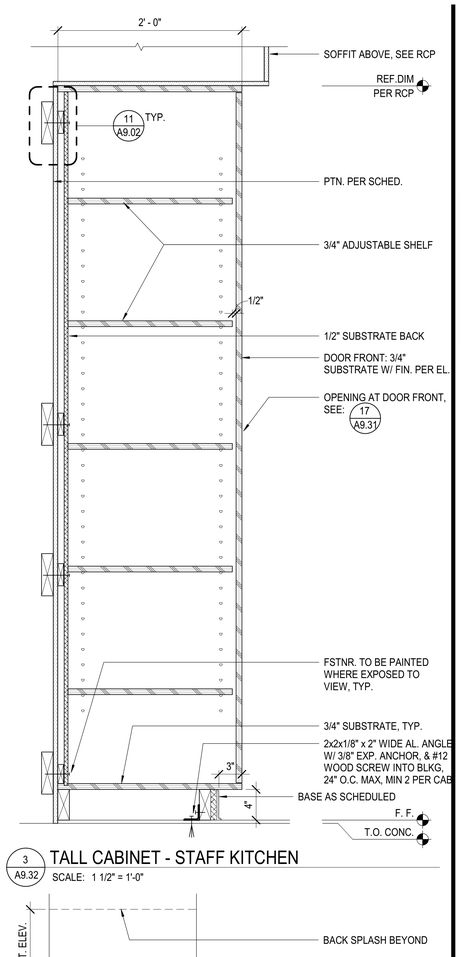

3 A9.32 TALL CABINET - STAFF KITCHEN

SCALE: 1 1/2" = 1'-0"

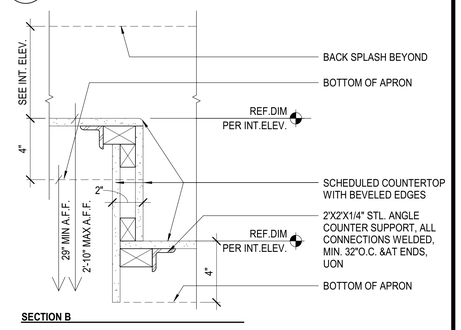

SECTION B

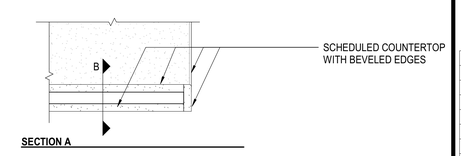

SECTION A

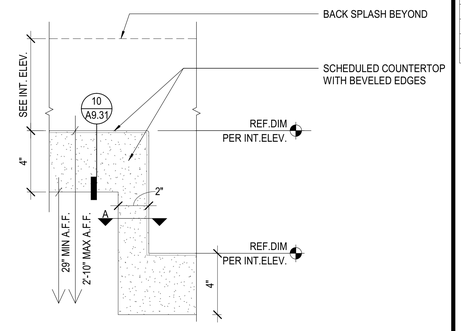

1 A9.32 ADULT TO CHILDREN'S LAVS TRANSITION

SCALE: 3" = 1'-0"

Division of the State Architect

APPROVED
DIV. OF THE STATE ARCHITECT
APP: 02-119316 INC:
REVIEWED FOR
SS☐ FLS☐ ACS☑
DATE: 03/24/2022

Office of the State Fire Marshal

OFFICE OF THE STATE FIRE MARSHAL
APPROVED FIRE AND PANIC ONLY
03/14/22
21-0498
Approval of this plan does not authorize or approve any omission or deviation from applicable regulations. Final approval is subject to field inspection. One set of approved plans shall be available on the project site at all times.

CSUS CHILD DEVELOPMENT CENTER

CALIFORNIA STATE UNIVERSITY, STANISLAUS
ONE UNIVERSITY CIRCLE
TURLOCK, CA 95382

ehdd.

PIER 1, BAY 2
THE EMBARCADERO
SAN FRANCISCO, CA 94111

INFO@EHDD.COM
+1 415-285-9193

Consultant

Stamp

LICENSED ARCHITECT
JENNIFER K. DEVLIN
Jennifer Devlin
Ren. 5-31-23
STATE OF CALIFORNIA

Printing	Date
95% CONSTRUCTION DOCUMENTS	06.25.2021
PERMIT SET	08.16.2021
PERMIT SET - DSA V2	12.15.2021
PERMIT SET - SFM	12.21.2021

Revisions and Description	Date

Scale
As indicated

Drawn by
Author

EHDD Job Number
20020

Sheet Title
CASEWORK DETAILS

Sheet Number
A9.32 V3

C:\Users\j.quinones\OneDrive - EHDD\Documents\20020-A-CSU STANISLAUS CDC- CENTRAL_j.quinones.rvt

12/10/2021 9:37:30 AM

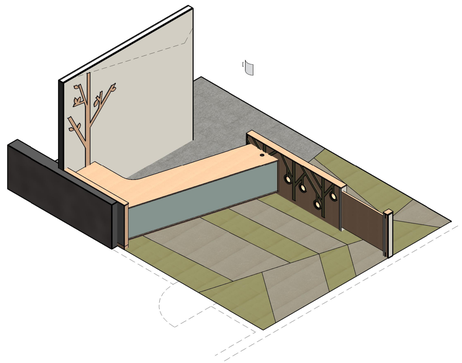

13 A9.33 RECEPTION DESK PERSPECTIVE -FRONT SIDE
SCALE:

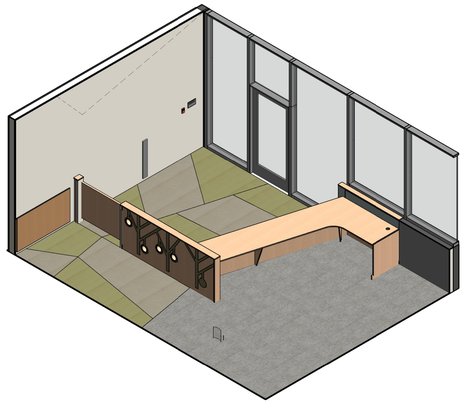

9 A9.33 RECEPTION DESK PERSPECTIVE - BACK SIDE
SCALE:

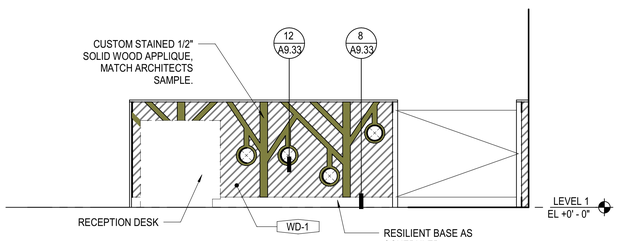

NOTE:

COORDINATE FINAL BRANCH DESIGN, ANGLES AND DIMENSIONS WITH ARCHITECTS CAD BACKGROUNDS BEFORE PRODUCTION.

4 A9.33 LOW WALL AT RECEPTION - SOUTH
SCALE: 1/2" = 1'-0"

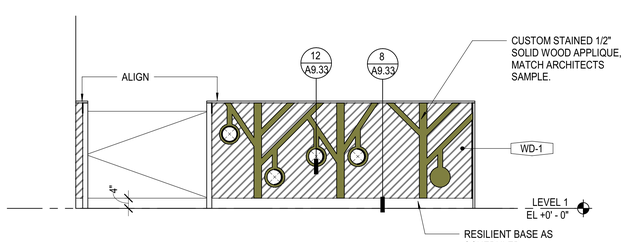

NOTE:

COORDINATE FINAL BRANCH DESIGN, ANGLES AND DIMENSIONS WITH ARCHITECTS CAD BACKGROUNDS BEFORE PRODUCTION.

3 A9.33 LOW WALL AT RECEPTION - NORTH
SCALE: 1/2" = 1'-0"

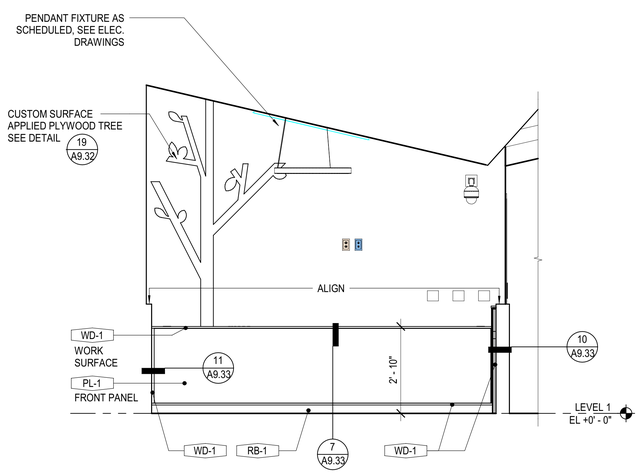

2 A9.33 RECEPTION DESK FACE
SCALE: 1/2" = 1'-0"

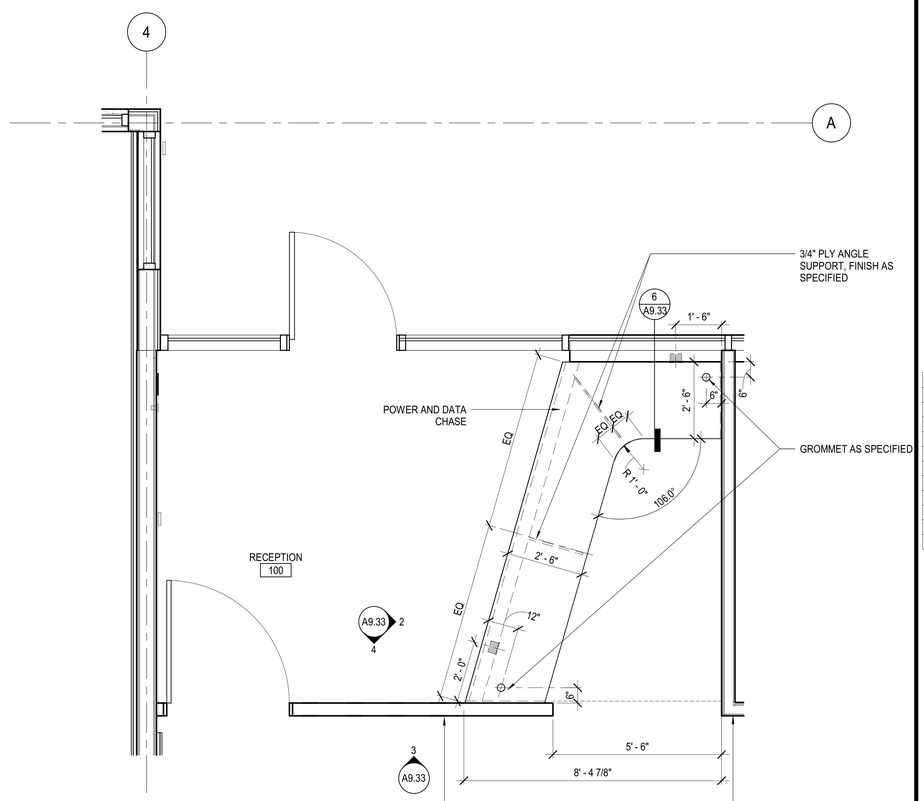

1 A9.33 ENLARGED RECEPTION DESK PLAN
SCALE: 1/2" = 1'-0"

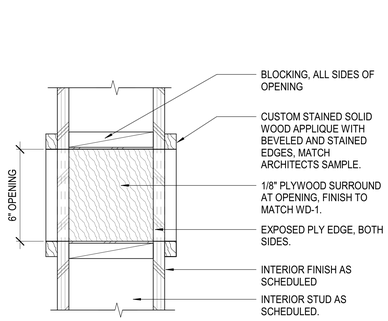

12 A9.33 SECT AT OPENINGS IN LOW WALL (PLAN SECT. SIM.)
SCALE: 3" = 1'-0"

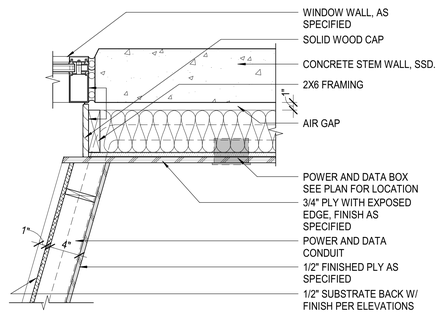

11 A9.33 SECTION AT EXTERIOR WALL
SCALE: 1 1/2" = 1'-0"

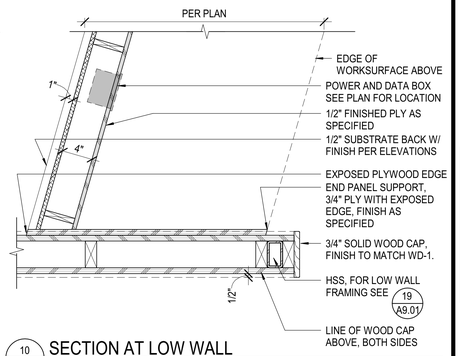

10 A9.33 SECTION AT LOW WALL
SCALE: 1 1/2" = 1'-0"

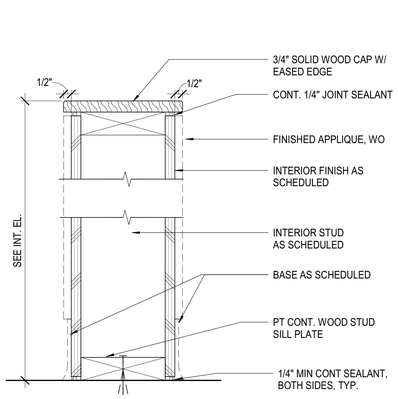

8 A9.33 LOW WALL AT RECEPTION
SCALE: 3" = 1'-0"

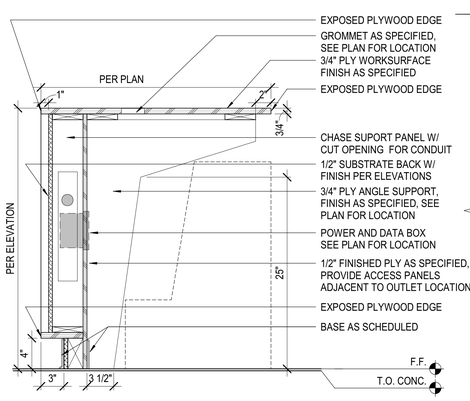

7 A9.33 SECTION AT FACE
SCALE: 1 1/2" = 1'-0"

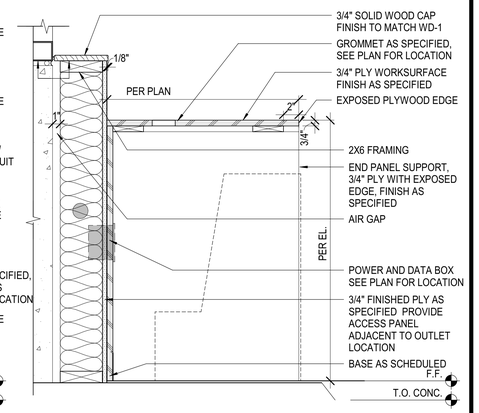

6 A9.33 SECTION EXTERIOR AT WALL
SCALE: 1 1/2" = 1'-0"

Division of the State Architect

APPROVED
DIV. OF THE STATE ARCHITECT
APP: 02-119316 INC:
REVIEWED FOR
SS☐ FLS☐ ACS☑
DATE: 03/24/2022

Office of the State Fire Marshal

OFFICE OF THE STATE FIRE MARSHAL
APPROVED FIRE AND PANIC ONLY
03/14/22
21-0498
Approval of this plan does not authorize or approve any omission or deviation from applicable requirements. Final approval is subject to field inspection. One set of approved plans shall be available on the project site at all times.

CSUS CHILD DEVELOPMENT CENTER

CALIFORNIA STATE UNIVERSITY, STANISLAUS
ONE UNIVERSITY CIRCLE
TURLOCK, CA 95382

ehdd.

PIER 1, BAY 2
THE EMBARCADERO
SAN FRANCISCO, CA 94111

INFO@EHDD.COM
+1 415-285-9193

Consultant

Stamp

LICENSED ARCHITECT
JENNIFER K. DEVLIN
No. C-27344
Ren. 5-31-23
STATE OF CALIFORNIA

Printing	Date
95% CONSTRUCTION DOCUMENTS	06.25.2021
PERMIT SET	08.16.2021
PERMIT SET - DSA V2	12.15.2021
PERMIT SET - SFM	12.21.2021

Revisions and Description	Date

Scale
As indicated

Drawn by
Author

EHDD Job Number
20020

Sheet Title
RECEPTION DESK PLAN AND DETAILS

Sheet Number
A9.33 V3

C:\Users\l.quinones\OneDrive - EHDD\Documents\20020-A-CSU STANISLAUS CDC- CENTRAL_l.quinones.rvt

12/10/2021 9:37:33 AM

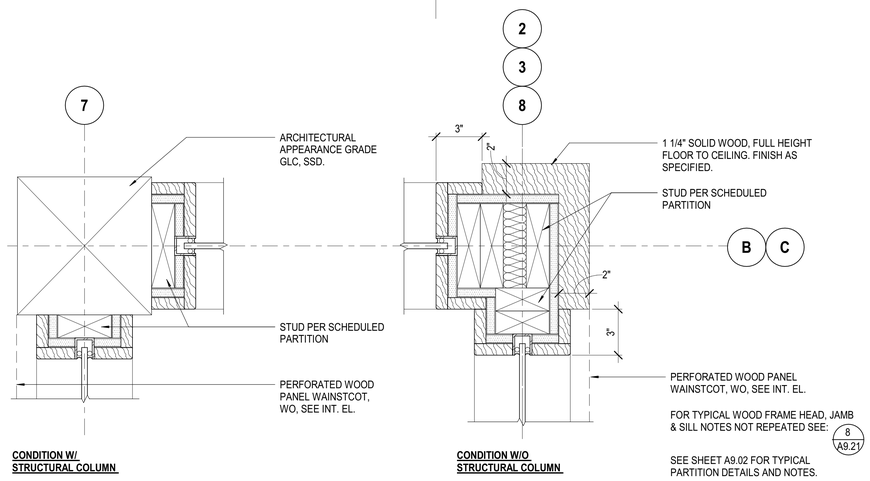

20 A9.41 COLUMN CONDITION AT GL B & C
SCALE: 3" = 1'-0"

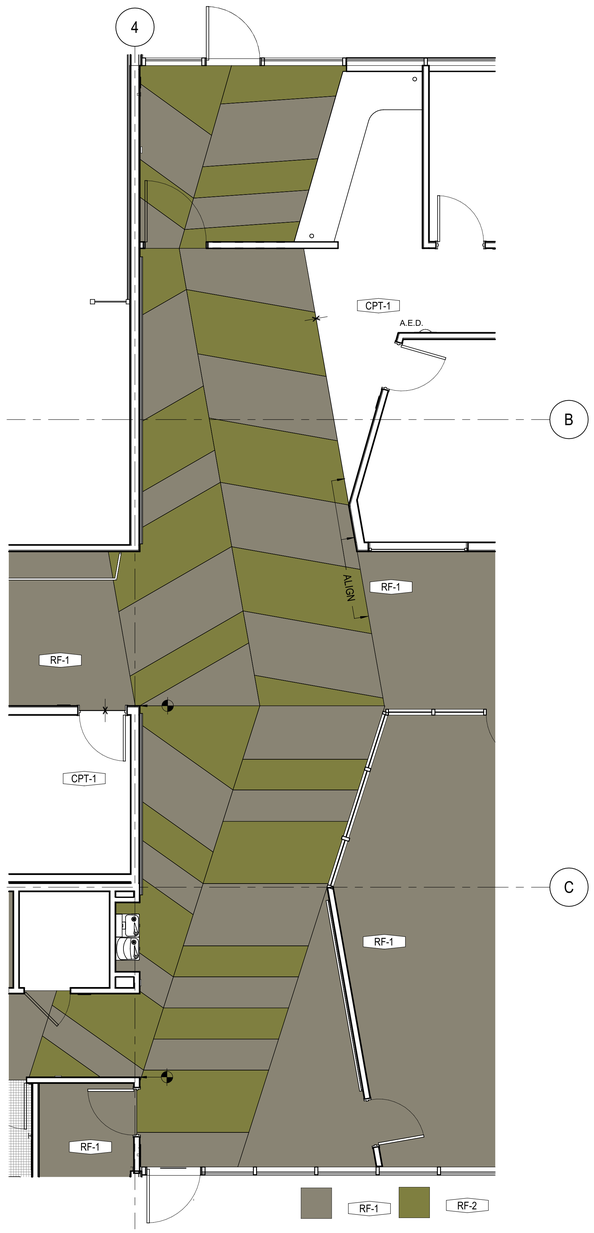

17 A9.41 ENLARGED FLOOR PATTERN
SCALE: 1/4" = 1'-0"

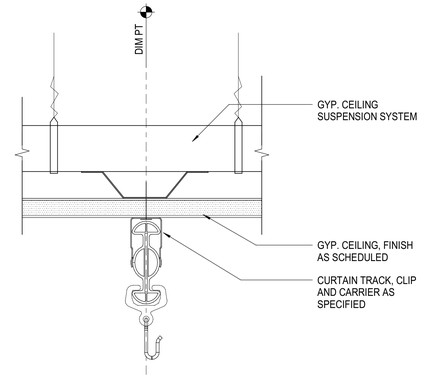

12 A9.41 CURTAIN TRACK AT CEILING
SCALE: 6" = 1'-0"

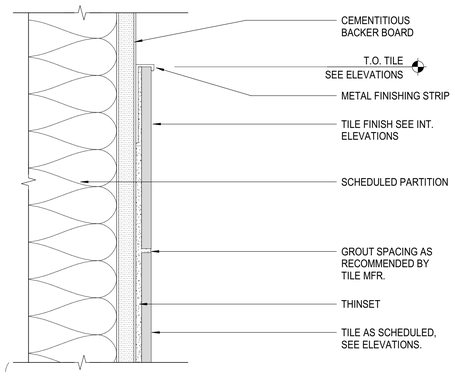

11 A9.41 TILE EDGE CONDITION
SCALE: 6" = 1'-0"

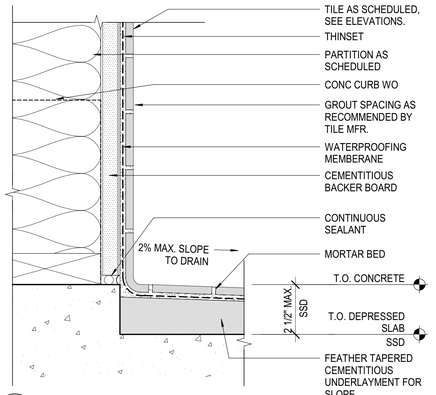

10 A9.41 WALL TO FLOOR TILE TRANSITION
SCALE: 6" = 1'-0"

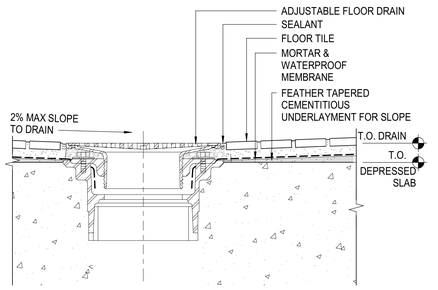

9 A9.41 SLOPE AT DRAIN
SCALE: 6" = 1'-0"

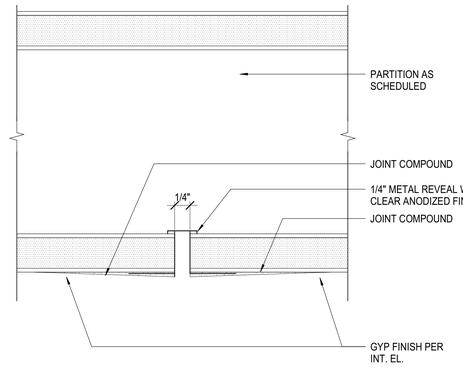

8 A9.41 GYP. REVEAL FOR PAINT TRANSITION
SCALE: 12" = 1'-0"

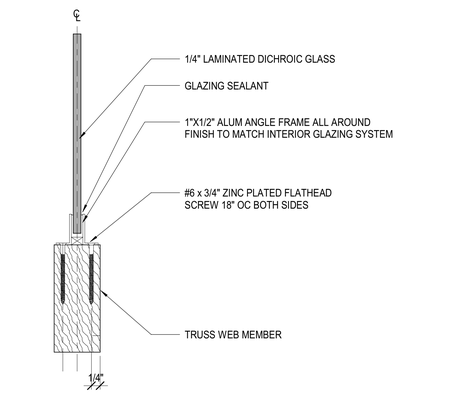

7 A9.41 DICHROIC GLASS INFILL @ TRUSS - ALT. 10
SCALE: 6" = 1'-0"

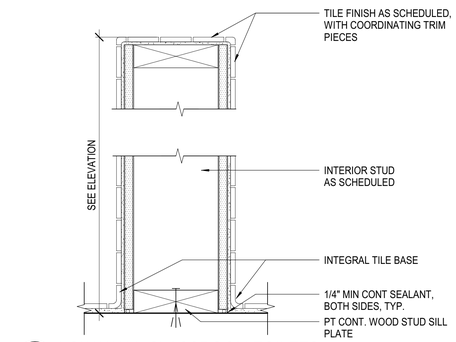

6 A9.41 LOW WALL CLASSROOM TOILETS
SCALE: 3" = 1'-0"

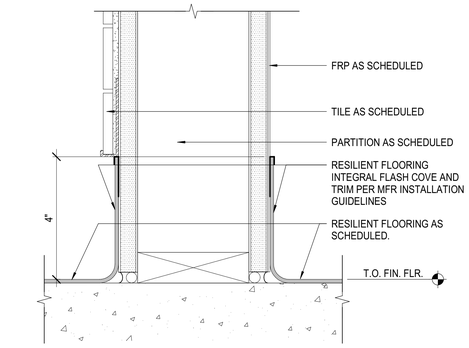

5 A9.41 FLASH COVE BASE AT TILE & FRP
SCALE: 6" = 1'-0"

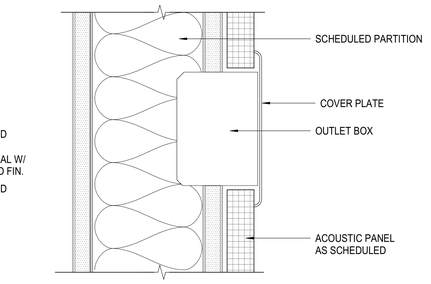

4 A9.41 ACOUSTIC PANEL @ RECESSED OUTLET
SCALE: 6" = 1'-0"

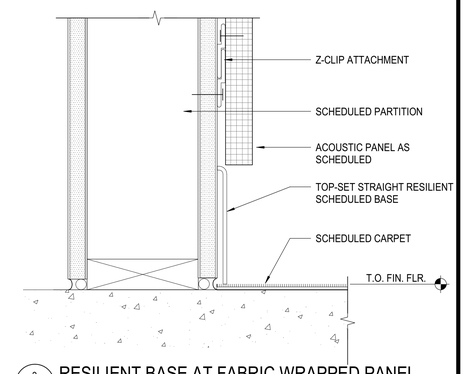

3 A9.41 RESILIENT BASE AT FABRIC WRAPPED PANEL
SCALE: 6" = 1'-0"

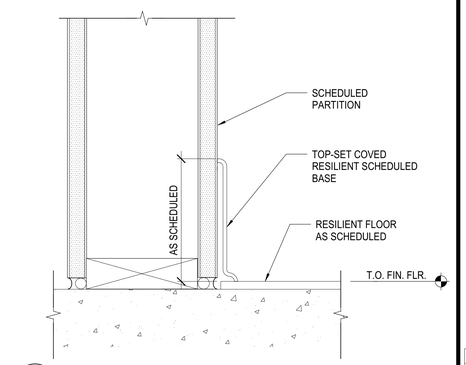

2 A9.41 RESILIENT BASE AT CONCRETE
SCALE: 6" = 1'-0"

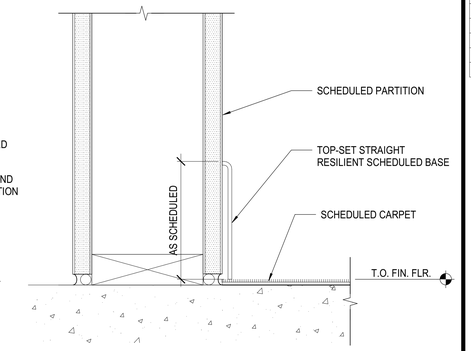

1 A9.41 RESILIENT BASE AT CARPET
SCALE: 6" = 1'-0"

C:\Users\ quinones\OneDrive - EHDD\Documents\20020-A-CSU STANISLAUS CDC- CENTRAL_ quinones.rvt

Division of the State Architect

APPROVED
DIV. OF THE STATE ARCHITECT
APP: 02-119316 INC:
REVIEWED FOR
SS☐ FLS☐ ACS☑
DATE: 03/24/2022

Office of the State Fire Marshal

OFFICE OF THE STATE FIRE MARSHAL
APPROVED FIRE AND PANIC ONLY
03/14/22
21-0498
Approval of this plan does not authorize or approve any omission or deviation from applicable requirements. Final approval is subject to field inspection. One set of approved plans shall be available on the project site at all times.

CSUS CHILD DEVELOPMENT CENTER

CALIFORNIA STATE UNIVERSITY, STANISLAUS
ONE UNIVERSITY CIRCLE
TURLOCK, CA 95382

ehdd.

PIER 1, BAY 2
THE EMBARCADERO
SAN FRANCISCO, CA 94111

INFO@EHDD.COM
+1 415-285-9193

Consultant

Stamp

LICENSED ARCHITECT
JENNIFER K DEVLIN
No. C-27347
Ren. 5-31-23
STATE OF CALIFORNIA

Printing	Date
95% CONSTRUCTION DOCUMENTS	06.25.2021
PERMIT SET	08.16.2021
PERMIT SET - DSA V2	12.15.2021
PERMIT SET - SFM	12.21.2021

Revisions and Description	Date

Scale
As indicated

Drawn by
Author

EHDD Job Number
20020

Sheet Title
MISC. INTERIOR DETAILS

Sheet Number
A9.41 V3

12/8/2021 1:32:45 PM

EQUIPMENT SCHEDULE			
ITEM NO.	QTY	DESCRIPTION	REMARKS
K-01	1	HAND SINK	
K-02	1	THREE COMPARTMENT SINK, DROP-IN	
K-03	1	PRE-RINSE FAUCET ASSEMBLY WITH ADD ON FAUCET	
K-04	1	MOBILE DRAWER CABINET	
K-05	3	TRASH CONTAINER	NIKEC / BY OWNER-OPERATOR
K-06	1	RANGE 30"	PER CBC 11B-804.6.4 LOCATION OF CONTROLS SHALL NOT REQUIRE REACHING ACROSS BURNERS.
K-07	1	EXHAUST VENTILATOR	
K-08	1	OPEN NUMBER	
K-09	1	MICROWAVE	
K-10	2	DISHWASHER, UNCDERCOUNTER	
K-11	1	HEATED CABINET	
K-12	1	PREP SINK, DROP IN	
P-01	1	REACH-IN REFRIGERATOR	
P-02	3	60" SHELVING UNIT	
P-03	1	REACH-IN FREEZER	

NIKEC - NOT IN KITCHEN EQUIPMENT CONTRACT

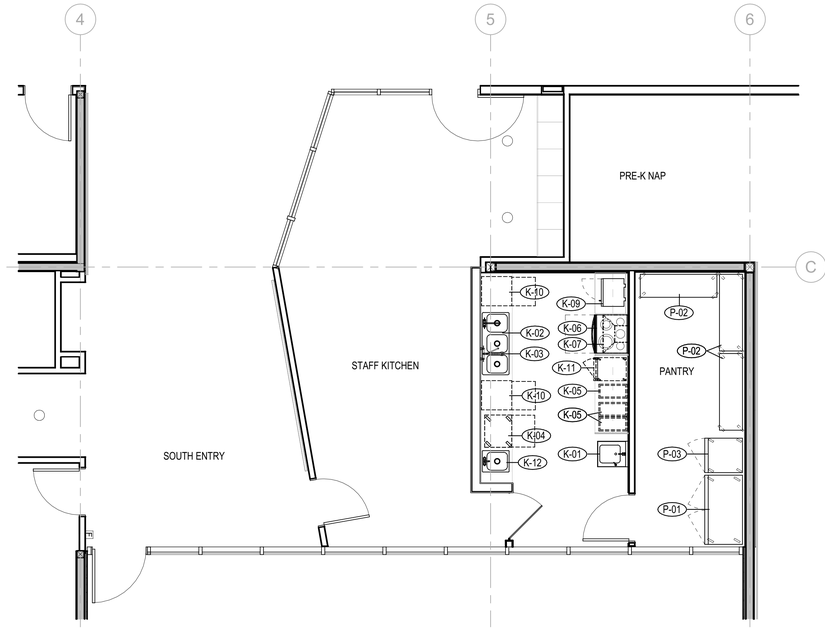

1 LEVEL 1 - FOODSERVICE EQUIPMENT PLAN
1/4" = 1'-0"

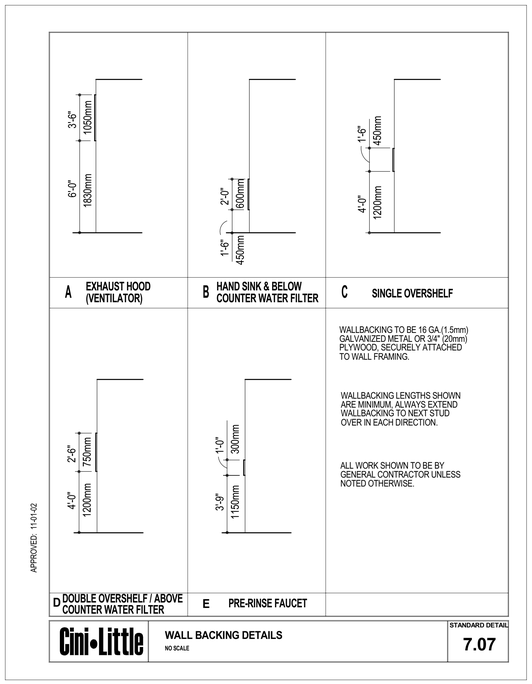

SPECIAL CONDITIONS NOTES

NOTE A: CONTRACTOR SHALL ENSURE ALL WALLS AND/OR CEILINGS ARE PROPERLY REINFORCED TO SUPPORT ALL WALL AND/OR CEILING SUPPORTED EQUIPMENT AS PER DETAIL 7.07.

NOTE B: NOT USED.

NOTE C: NOT USED.

NOTE D: CONTRACTOR SHALL PITCH FLOOR TO AREA FLOOR DRAINS PER ARCHITECTS DRAWINGS.

NOTE E: NOT USED.

NOTE F: NOT USED.

NOTE G: NOT USED.

NOTE H: NOT USED.

NOTE I: NOT USED.

NOTE J: NOT USED.

NOTE K: NOT USED.

NOTE L: CONTRACTOR SHALL VERIFY INSTALLATION HEIGHT OF FINISHED CEILING WITH FOODSERVICE EQUIPMENT BELOW AS SHOWN.

NOTE M: NOT USED.

NOTE N: NOT USED.

NOTE O: NOT USED.

NOTE P: KEC TO COORDINATE ALL EQUIPMENT LEGS WITH FLOOR DRAIN AND FLOOR TROUGH LOCATIONS TO ENSURE THERE IS NO CONFLICT WITH FLOOR DRAINS, SINKS OR FLOOR TROUGHS FOR MAINTENANCE.

NOTE Q: NOT USED.

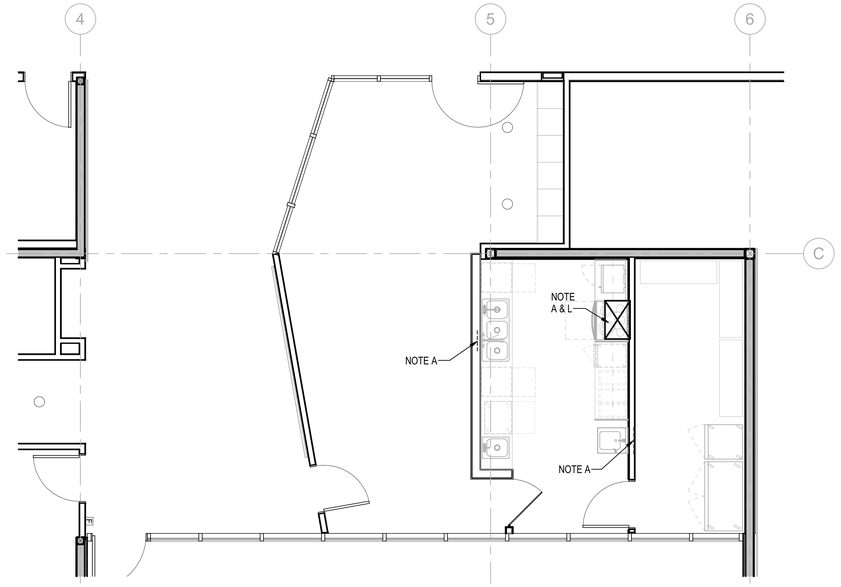

2 LEVEL 1 - FOODSERVICE SPECIAL CONDITIONS PLAN
1/4" = 1'-0"

NOTE:
BURNER AND EXHAUST HOODS ARE FRONT MOUNTED. SEE CUTS BOOK FOR DETAILS

DISCLAIMERS:

- THE FOODSERVICE EQUIPMENT PLANS AND SPECIFICATIONS ARE INTENDED TO DEMONSTRATE TYPES AND ARRANGEMENTS, INCLUDING SPACE AND UTILITY REQUIREMENTS, OF EQUIPMENT REQUIRED FOR THIS PROJECT REGARDING THE DESIRED FUNCTION AND PRODUCT FLOW, AND TO SERVE AS A REFERENCE ONLY TO THE LICENSED PROFESSIONAL ARCHITECT AND/OR ENGINEERS IN THE PREPARATION OF THEIR RESPECTIVE BID AND CONSTRUCTION DOCUMENTS. NO ARCHITECTURAL OR ENGINEERING DESIGN SERVICES ARE INTENDED OR ASSUMED.
- IT SHALL BE THE RESPONSIBILITY OF THE FOODSERVICE EQUIPMENT BIDDERS AND THE KITCHEN EQUIPMENT CONTRACTOR (KEC) TO INFORM CINI-LITTLE INTERNATIONAL, INC. OF ANY DISCREPANCIES FOUND WITHIN THESE DOCUMENTS TO INCLUDE: WRITTEN SPECIFICATIONS, DRAWINGS OR SCHEDULES, TO ALLOW AN OPPORTUNITY FOR CINI-LITTLE INTERNATIONAL, INC. TO CLARIFY AND ANSWER ANY DISCREPANCIES IN AN OFFICAL REQUEST FOR INFORMATION (RFI) . ANY IDENTIFIED DISCREPANCIES SHALL BE IDENTIFIED IN WRITING IN THE FORM OF A REQUEST FOR INFORMATION (RFI) TO CINI-LITTLE INTERNATIONAL, INC. AND INCLUDE THE DESIGN TEAM WHICH MAY INCLUDE THE GENERAL CONTRACTOR, ARCHITECT OF RECORD AND ENGINEERS ON THE PROJECT.

4' 0' 4' 8'

\\CINILITTLE\users\mperigard\My Documents\20020-K-CSU STANISLAUS CDC- CENTRAL_mperigard@cinilittle.com.rvt

Division of the State Architect

APPROVED
DIV. OF THE STATE ARCHITECT
APP: 02-119316 INC:
REVIEWED FOR
SS☐ FLS☐ ACS☑
DATE: 03/24/2022

Office of the State Fire Marshal

OFFICE OF THE STATE FIRE MARSHAL
APPROVED FIRE AND PANIC ONLY
03/14/22
21-0498
Approval of this plan does not authorize or approve any omission or deviation from applicable requirements. Final approval is subject to field inspection. One set of approved plans shall be available on the project site at all times.

CSUS CHILD DEVELOPMENT CENTER

CALIFORNIA STATE
UNIVERSITY, STANISLAUS
ONE UNIVERSITY CIRCLE
TURLOCK, CA 95382

ehdd

PIER 1, BAY 2
THE EMBARCADERO
SAN FRANCISCO, CA 94111

INFO@EHDD.COM
+1 415-285-9193

Consultant

Stamp

Printing	Date
95% CONSTRUCTION DOCUMENTS	06.25.2021
PERMIT SET	08.16.2021
PERMIT SET - DSA V2	12.15.2021
PERMIT SET - SFM	12.21.2021

Revisions and Description	Date

Scale
As indicated

Drawn by
CLI CAD

EHDD Job Number
20020

Sheet Title
FOODSERVICE PLAN, SCHEDULE & SPECIAL CONDITIONS PLAN

Sheet Number
QF101V3

12/8/2021 1:33:22 PM

MECHANICAL NOTES

WORK DESCRIBED IN THESE NOTES IS TO BE PERFORMED UNDER DIVISION 22 (PLUMBING) AND DIVISION 23 (HVAC).

1. THIS DRAWING LOCATES FINAL MECHANICAL POINTS OF CONNECTION FOR EACH FOODSERVICE EQUIPMENT ITEM. IT DOES NOT INDICATE UTILITY ROUGH-IN LOCATIONS AND MUST NOT BE USED FOR THAT PURPOSE. LOCATIONS, SIZES, AND HEIGHTS ABOVE THE FLOOR ARE APPROXIMATELY AS THEY WILL OCCUR ON EQUIPMENT ITEMS SHOWN. THE DESIGN OF SYSTEMS TO ACCOMMODATE THESE REQUIREMENTS IS TO BE IN ACCORDANCE WITH ALL APPLICABLE CODES AND MEET WITH THE APPROVAL OF ALL GOVERNING AUTHORITIES.
2. UTILITIES SHOWN ARE FOR FOODSERVICE EQUIPMENT ITEMS ONLY. THIS DRAWING MUST BE USED IN CONJUNCTION WITH THE MECHANICAL DRAWINGS FOR OTHER REQUIRED UTILITIES.
3. CONCEAL ALL UTILITIES (GAS, WATER AND STEAM LINES) IN WALLS AND STUB-OUT OFWALLS AS REQUIRED FOR CONNECTIONS. DO NOT RUN EXPOSED ON THE FACE OF THE WALL. DO NOT STUB-OUT OF THE FLOOR UNLESS IT IS BELOW FREESTANDING EQUIPMENT.
4. EXPOSED PIPING AND FITTINGS ABOVE WORK SURFACES TO BE STAINLESS STEEL. EXPOSED PIPING AND FITTINGS BELOW WORK SURFACES TO BE CHROME PAINTED.
5. ALL HORIZONTAL PIPING RUNS EXTENDED TO AND CONNECTED TO EQUIPMENT ITEMS SHALL BE AT THE HIGHEST PRACTICAL ELEVATION, BUT NOT LESS THAN 6" (155mm) ABOVE THE FLOOR SO AS TO PROVIDE CLEARANCE FOR CLEANING.
6. NOT USED.
7. NOT USED.
8. NOT USED.
9. NOT USED.
10. PROVIDE GREASE TRAPS WITH TOP FLUSH WITH TOP OF FINISHED FLOOR UNLESS PROVIDED OUTSIDE FOODSERVICE AREA. GREASE TRAPS SHALL NOT BE LOCATED BENEATH ANY FOODSERVICE EQUIPMENT ITEM UNLESS THERE IS SUFFICIENT SPACE TO REMOVE COVER FOR SERVICE WITHOUT INTERFERING WITH THE OPERATION OF EQUIPMENT ITEMS.
11. NOT USED.
12. NOT USED.
13. NOT USED.
14. NOT USED.
15. NOT USED.
16. VENTILATORS SHALL INCLUDE THERMOSTAT(S) INSTALLED IN THE CANOPY TO AUTOMATICALLY START THE EXHAUST FAN(S) WHEN COOKING OCCURS TO MEET THE LATEST ADOPTED MECHANICAL CODE (IMC) SECTION 507.2.

MECHANICAL ABBREVIATIONS AND SYMBOLS

GAS	G
BRITISH THERMAL UNIT (000'S)	MBTU
HOT WATER	HW
COLD WATER	CW
INTERCONNECTED WATER LINE	IWL
COOLING WATER	CTW
COOLING WATER RETURN	CTWR
WASTE	W
INDIRECT WASTE	IW
FLOOR DRAIN	FD
FUNNEL FLOOR DRAIN	FFD
FLOOR SINK	FS
STEAM SUPPLY	SS
CONDENSATE RETURN	CR
GREASE TRAP	GT
EXHAUST DUCT	
SUPPLY DUCT	
STATIC PRESSURE, WATER GAUGE	SPWG
ABOVE FINISHED FLOOR	AFF
DOWN FROM ABOVE	DFA
AIR GAP DRAIN	AG
COMPRESSED AIR	AIR
REFRIGERATION LINE	REF

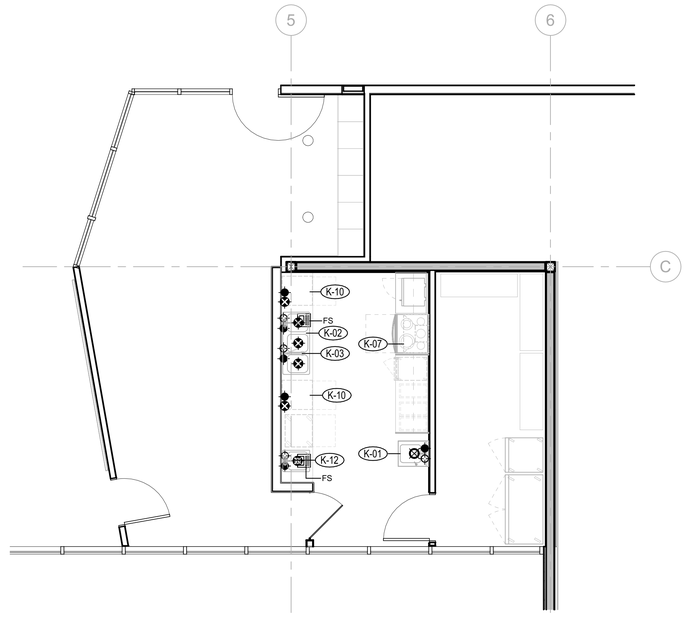

1 LEVEL 1 - FOODSERVICE MECHANICAL SPOT CONNECTION PLAN
1/4" = 1'-0"

PLUMBING SCHEDULE

ITEM NO.	QTY.	DESCRIPTION	REMARKS	CW (in)	CW AFF (in)	HW (in)	HW AFF (in)	FILTERED H2O (in)	FILTERED AFF (in)	IW (in)	DW (in)	DW AFF (in)	GAS (in)	GAS AFF (in)	MBTU	CTW (in)	CTWR (in)	CTW GPM	MAX PSI	PLUMBING REMARKS	ITEM NO.
K-01	1	HAND SINK	BLDG - CFCI	1/2"	36"	1/2"	36"				1-1/2"									(1) set of 1" faucet holes, 4" OC, deck mount; P-Trap drain size	K-01
K-02	1	THREE COMPARTMENT SINK, DROP-IN	BLDG - CFCI	1/2"	36"	1/2"	36"			(3) 1-1/2" FS											K-02
K-03	1	PRE-RINSE FAUCET ASSEMBLY WITH ADD ON FAUCET	BLDG - CFCI	1/2"	36"	1/2"	36"														K-03
K-04	1	MOBILE DRAWER CABINET	GROUP 2 - OFOI																		K-04
K-05	3	TRASH CONTAINER	GROUP 2 - OFOI																		K-05
K-06	1	RANGE 30"	GROUP 2 - OFOI																		K-06
K-07	1	EXHAUST VENTILATOR	BLDG - CFCI																		K-07
K-08	1	OPEN NUMBER																			K-08
K-09	1	MICROWAVE	GROUP 2 - OFOI																	female garden hose connection	K-09
K-10	2	DISHWASHER, UNCDERCOUNTER	BLDG - CFCI			3/4"	12"			7/8" FS											K-10
K-11	1	HEATED CABINET	GROUP 2 - OFOI																		K-11
K-12	1	PREP SINK, DROP IN	BLDG - CFCI	1/2"	36"	1/2"	36"			1-1/2" FS											K-12
P-01	1	REACH-IN REFRIGERATOR	GROUP 2 - OFOI																		P-01
P-02	3	60" SHELVING UNIT	GROUP 2 - OFOI																		P-02
P-03	1	REACH-IN FREEZER	GROUP 2 - OFOI																		P-03

NOTE: THIS DRAWING IS FOR INFORMATION ONLY.

GENERAL CONTRACTOR SHALL COORDINATE WITH THE KITCHEN EQUIPMENT SUB-CONTRACTOR AND RELATED MECHANICAL, ELECTRICAL AND PLUMBING SUB-CONTRACTORS TO ESTABLISH FINAL SPOT CONNECTIONS LOCATIONS AND CONFIGURATIONS AS REQUIRED. THIS DRAWING SHALL NOT BE USED TO LOCATE ANY UTILITY CONNECTIONS IN THE FIELD OR TO LOCATE ANY ROUGH-IN, PENETRATION, OR OTHER REQUIREMENTS.
CINI• LITTLE INTERNATIONAL, INC.

4' 0' 4' 8'

\\CINILITTLE\users\mperigard\My Documents\20020-K-CSU STANISLAUS CDC- CENTRAL_mperigard@cinilittle.com.rvt

Division of the State Architect

APPROVED
DIV. OF THE STATE ARCHITECT
APP: 02-119316 INC:
REVIEWED FOR
SS☐ FLS☐ ACS☑
DATE: 03/24/2022

Office of the State Fire Marshal

OFFICE OF THE STATE FIRE MARSHAL
APPROVED FIRE AND PANIC ONLY
03/14/22
21-0498
Approval of this plan does not authorize or approve any omission or deviation from applicable requirements. Final approval is subject to field inspection. One set of approved plans shall be available on the project site at all times.

CSUS CHILD DEVELOPMENT CENTER

CALIFORNIA STATE UNIVERSITY, STANISLAUS
ONE UNIVERSITY CIRCLE
TURLOCK, CA 95382

ehdd.

PIER 1, BAY 2
THE EMBARCADERO
SAN FRANCISCO, CA 94111

INFO@EHDD.COM
+1 415-285-9193

Consultant

Stamp

Printing	Date
95% CONSTRUCTION DOCUMENTS	06.25.2021
PERMIT SET	08.16.2021
PERMIT SET - DSA V2	12.15.2021
PERMIT SET - SFM	12.21.2021

Revisions and Description	Date

Scale
As indicated

Drawn by
CLI CAD

EHDD Job Number
20020

Sheet Title
FOODSERVICE EQUIPMENT MECHANICAL SPOT CONNECTION PLAN

Sheet Number
QF102V3

12/17/2021 9:50:59 AM

ELECTRICAL NOTES

WORK DESCRIBED IN THESE NOTES IS TO BE PERFORMED UNDER DIVISION 26 (ELECTRICAL).

1. THIS DRAWING LOCATES FINAL ELECTRICAL POINTS OF CONNECTION FOR EACH FOODSERVICE EQUIPMENT ITEM. IT DOES NOT INDICATE UTILITY ROUGH-IN LOCATIONS AND MUST NOT BE USED FOR THAT PURPOSE. LOCATIONS, SIZES, AND HEIGHTS ABOVE THE DESIGN OF SYSTEMS TO ACCOMMODATE THESE REQUIREMENTS IS TO BE IN ACCORDANCE WITH ALL APPLICABLE CODES AND MEET WITH THE APPROVAL OF ALL GOVERNING AUTHORITIES.
2. UTILITIES SHOWN ARE FOR FOODSERVICE EQUIPMENT ITEMS ONLY. THIS DRAWING MUST BE USED IN CONJUNCTION WITH THE ELECTRICAL DRAWINGS FOR OTHER REQUIRED UTILITIES.
3. CONCEAL ALL UTILITIES IN WALLS AND STUB-OUT OF WALLS AS REQUIRED FOR CONNECTIONS. DO NOT RUN EXPOSED ON THE FACE OF THE WALL. DO NOT STUB-OUT OF THE FLOOR UNLESS IT IS BELOW FREESTANDING EQUIPMENT.
4. EXPOSED CONDUIT ABOVE WORK SURFACES TO BE STAINLESS STEEL. EXPOSED BELOW WORK SURFACES TO BE CHROME PAINTED.
5. PROVIDE SWITCH CONTROL FOR EXHAUST VENTILATOR.
6. NOT USED.
7. NOT USED.
8. NOT USED.
9. NOT USED.
10. NOT USED.
11. NOT USED.
12. PROVIDE DUPLEX CONVENIENCE OUTLET (120/1Ø, 20A) AT HEIGHT INDICATED.
13. NOT USED.
14. NOT USED.
15. ELECTRICAL PANELS TO BE LOCATED WITHIN LINE OF SIGHT OF EQUIPMENT SERVED BY PANELS AND NOT FURTHER AWAY FROM EQUIPMENT THAN LOCAL CODE REQUIREMENTS ALLOW.

ELECTRICAL ABBREVIATIONS AND SYMBOLS

SWITCH	SW	$
ELECTRICAL CONNECTION	EC	
JUNCTION BOX	JB	J
SINGLE RECEPTACLE	SR	
DUPLEX RECEPTACLE	DR	
DATA COMMUNICATIONS	DC	D
EMPTY JUNCTION BOX		
AMP	A	
KILOWATT	KW	
HORSEPOWER	HP	
VOLT	V	
PHASE	Ø	
ABOVE FINISHED FLOOR	AFF	
DOWN FROM ABOVE	DFA	

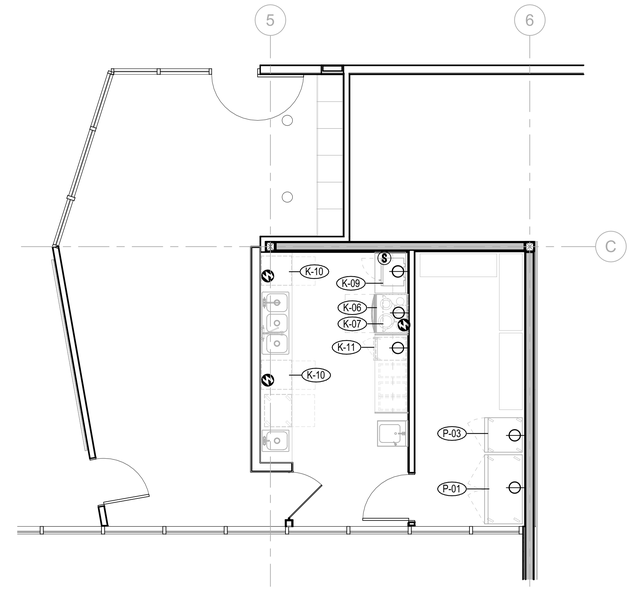

1 LEVEL 1 - FOODSERVICE ELECTRICAL SPOT CONNECTION PLAN
1/4" = 1'-0"

ELECTRICAL SCHEDULE

ITEM NO.	QTY.	DESCRIPTION	REMARKS	CONNECTION	AFF (in)	VOLTS	CYCLE	PHASE	AMPS	HP	KW	NEMA	ELECTRICAL REMARKS	ITEM NO.
K-01	1	HAND SINK	BLDG - CFCI											K-01
K-02	1	THREE COMPARTMENT SINK, DROP-IN	BLDG - CFCI											K-02
K-03	1	PRE-RINSE FAUCET ASSEMBLY WITH ADD ON FAUCET	BLDG - CFCI											K-03
K-04	1	MOBILE DRAWER CABINET	GROUP 2 - OFOI											K-04
K-05	3	TRASH CONTAINER	GROUP 2 - OFOI											K-05
K-06	1	RANGE 30"	GROUP 2 - OFOI	SR	24"	240/208	60	1	40					K-06
K-07	1	EXHAUST VENTILATOR	BLDG - CFCI	EC; SW	DFA	120	60	1	15				Lights; Verify Utilities with Manufacturer	K-07
K-08	1	OPEN NUMBER												K-08
K-09	1	MICROWAVE	GROUP 2 - OFOI	SR	24"	120	60	1	16		2	5-20P	5 ft. cord	K-09
K-10	2	DISHWASHER, UNCDERCOUNTER	BLDG - CFCI	EC	7"	208	60	3	32.1	3/4				K-10
K-11	1	HEATED CABINET	GROUP 2 - OFOI	SR	24"	120	60	1	8.4		1.0	5-15P		K-11
K-12	1	PREP SINK, DROP IN	BLDG - CFCI											K-12
P-01	1	REACH-IN REFRIGERATOR	GROUP 2 - OFOI	SR	84"	120	60	1	5.4	1/2		5-15P		P-01
P-02	3	60" SHELVING UNIT	GROUP 2 - OFOI											P-02
P-03	1	REACH-IN FREEZER	GROUP 2 - OFOI	SR	84"	120	60	1	3.7	1/2		5-15P		P-03

NOTE: THIS DRAWING IS FOR INFORMATION ONLY.

GENERAL CONTRACTOR SHALL COORDINATE WITH THE KITCHEN EQUIPMENT SUB-CONTRACTOR AND RELATED MECHANICAL, ELECTRICAL AND PLUMBING SUB-CONTRACTORS TO ESTABLISH FINAL SPOT CONNECTIONS LOCATIONS AND CONFIGURATIONS AS REQUIRED. THIS DRAWING SHALL NOT BE USED TO LOCATE ANY UTILITY CONNECTIONS IN THE FIELD OR TO LOCATE ANY ROUGH-IN, PENETRATION, OR OTHER REQUIREMENTS.
CINI• LITTLE INTERNATIONAL, INC.

4' 0' 4' 8'

C:\Users\JShaner\Documents\20020-K-CSU STANISLAUS CDC- CENTRAL_jshaner@cinilittle.com.rvt

Division of the State Architect
APPROVED
DIV. OF THE STATE ARCHITECT
APP: 02-119316 INC:
REVIEWED FOR
SS☐ FLS☐ ACS☑
DATE: 03/24/2022

Office of the State Fire Marshal

OFFICE OF THE STATE FIRE MARSHAL
APPROVED FIRE AND PANIC ONLY
03/14/22
21-0498
Approval of this plan does not authorize or approve any omission or deviation from applicable requirements. Final approval is subject to field inspection. One set of approved plans shall be available on the project site at all times.

CSUS CHILD DEVELOPMENT CENTER

CALIFORNIA STATE UNIVERSITY, STANISLAUS
ONE UNIVERSITY CIRCLE
TURLOCK, CA 95382

ehdd.

PIER 1, BAY 2
THE EMBARCADERO
SAN FRANCISCO, CA 94111

INFO@EHDD.COM
+1 415-285-9193

Consultant

Stamp

Printing	Date
95% CONSTRUCTION DOCUMENTS	06.25.2021
PERMIT SET	08.16.2021
PERMIT SET - DSA V2	12.15.2021
PERMIT SET - SFM	12.21.2021

Revisions and Description	Date

Scale
As indicated

Drawn by
CLI CAD

EHDD Job Number
20020

Sheet Title
FOODSERVICE EQUIPMENT ELECTRICAL SPOT CONNECTION PLAN

Sheet Number
QF103V3

12/9/2021 11:55:52 PM

STRUCTURAL ABBREVIATIONS

A

A.B.	ANCHOR BOLT
AC	ALASKA CEDAR (WOOD)
ABT	ABOUT
ABV	ABOVE
ADD'L	ADDITIONAL
ADJ.	ADJACENT
ALT.	ALTERNATE
AMP.	AMPLITUDE
AGGR.	AGGREGATE
APPROX.	APPROXIMATE(LY)
ARCH.	ARCHITECT(URE)(URAL)

B

BD	BOARD
BF	BRACED FRAME
B.F.	BOUNDARY FASTENER
B.L.	BOTTOM LOWER
BLDG	BUILDING
BLK	BLOCK
BLKG	BLOCKING
BM	BEAM
B.N.	BOUNDARY NAIL(ING)
BOT.	BOTTOM
B.A.	BOTTOM OF
B.A.C.	BOTTOM OF CONCRETE
B.A.F.	BOTTOM OF FOOTING
B.A.S.	BOTTOM OF STEEL
BRG	BEARING
B.S.	BOTH SIDES
BSMT	BASEMENT
B.U.	BOTTOM UPPER
BTWN	BETWEEN

C

C	CHANNEL (STEEL SHAPE)
CFS	COLD-FORMED STEEL
CIDH	CAST-IN-DRILLED HOLE
C.I.P.	CAST-IN-PLACE
C.J.	CONSTRUCTION JOINT
C.J.P.	COMPLETE JOINT PENETRATION
CLG	CEILING
CLT	CROSS LAMINATED TIMBER
CLR	CLEAR, CLEARANCE
C.M.U.	CONCRETE MASONRY UNIT
COL.	COLUMN
COLL.	COLLECTOR
CONC.	CONCRETE
CONN.	CONNECTION
CONST.	CONSTRUCT(ING)(ION)
CONT.	CONTINUOUS
CONTR.	CONTRACT(OR)
CRVD.	CURVED
C.P.	COMPLETE PENETRATION (WELD)
CST.	CONSTRUCTION
CTR	CENTER, CENTRAL
CTSK	COUNTERSINK
CNT	COUNTERWEIGHT
CVN	CHARPY V-NOTCH

D

d	PENNY WEIGHT (NAIL)
D2L	NELSON WELDED REBAR
D.B.A.	DEFORMED BAR ANCHOR
DBL	DOUBLE
DEMO.	DEMOLITION
DTL	DETAIL
DF	DOUGLAS FIR (WOOD)
DIA.	DIAMETER
DIAG.	DIAGONAL
DIM.	DIMENSION
DISCONT.	DISCONTINUOUS
DN	DOWN
DO	DITTO
DP	DEEP
DWG	DRAWING

E

(E)	EXISTING
EA.	EACH
E.A.	EACH FACE
E.B.	SUCH AS
EL.	ELEVATION
ELEC.	ELECTRICAL
ELEVR	ELEVATOR
E.J.	EXPANSION JOINT
EMBED.	EMBEDMENT
E.N.	EDGE NAIL(ING)
E.O.	EDGE OF
E.O.S.	EDGE OF SLAB
E.P.S.	EXPANDED POLYSTYRENE
EQ.	EQUAL (EQUIVALENT)
EQ. SP.	EQUALLY SPACED
EQUIP.	EQUIPMENT
E.S.	EACH SIDE
E.W.	EACH WAY
E.W.E.F.	EACH WAY, EACH FACE
E/W	EAST/WEST
EXP.	EXPANSION
EXT.	EXTERIOR

F

FB	FLAT BAR (STEEL SHAPE)
F.D.	FLOOR DRAIN
FDN	FOUNDATION
F.F.	FAR FACE OR FIELD FASTENER
FIN.	FINISH(ED)
FLG.	FLANGE
FLR	FLOOR
F.N.	FIELD NAIL
F.O.	FACE OF
F.O.C.	FACE OF CONCRETE
F.O.S.	FACE OF STUD OR FACE OF STEEL
F.P.	FULL PENETRATION (WELD)
FPRF.	FIREPROOFING
FRMG	FRAMING
F.S.	FAR SIDE
FT	FEET OR FOOT
FTG.	FOOTING

G

ga	GAUGE
GALV.	GALVANIZED
GAR.	GARAGE
G.B.	GRADE BEAM
G.C.	GENERAL CONTRACTOR
GEN.	GENERAL
GLB	GLUED LAMINATED TIMBER BEAM
GLC	GLUED LAMINATED TIMBER COLUMN
GR.	GRADE
GYP.	GYPSUM

H

(H), HORIZ.	HORIZONTAL
H.A.	HOLLOW CLAY TILE
HD	HOLDDOWN
H.D.G.	HOT-DIP GALVANIZED
HDPE	HIGH-DENSITY POLYETHYLENE
HDR	HEADER
HGR	HANGER
HK	HOOK
H.S.	HEADED STUD OR HIGH STRENGTH (BOLT)
HSS	HOLLOW STRUCTURAL SECTION
HT	HEIGHT

I

I.D.	INSIDE DIAMETER
I.E.	THAT IS, SPECIFICALLY
I.F.	INSIDE FACE
IN.	INCH
INCL.	INCLUDED
INFO.	INFORMATION
INSP.	INSPECTION
INSUL.	INSULATION
INT.	INTERIOR
IRREG.	IRREGULAR

J

JCT.	JUNCTION
JST	JOIST
JT, JNT	JOINT

K

K	KIP (1,000 POUNDS)
K.D.	KILN DRIED
KSI	KIPS PER SQUARE INCH
KSF	KIPS PER SQUARE FOOT

L

L	ANGLE (STEEL SHAPE)
LB.	POUND
LGS	LIGHT-GAUGE STEEL
L.L.B.B.	LONG LEGS BACK TO BACK
L.L.C.	LONG LEG HORIZONTAL
L.L.V.	LONG LEG VERTICAL
LMBR	LUMBER
L.S.	LONG SLOTTED (HOLE)
LSL	LAMINATED STRAND LUMBER
LSLH	LONG SLOTTED (HOLE) W/ LONG AXIS HORIZ.
LSLT.	LONG SLOTTED (HOLE)
LSLV	LONG SLOTTED (HOLE) W/ LONG AXIS VERT.
LTWT	LIGHTWEIGHT
LVL	LEVEL OR LAMINATED VENEER LUMBER
LWC	LIGHTWEIGHT CONCRETE

M

MANUF.	MANUFACTURER
MATL	MATERIAL
MAX.	MAXIMUM (NO MORE THAN; AT MOST)
M.B.	MACHINE BOLT
MC	MISCELLANEOUS CHANNEL (STEEL SHAPE)
MECH.	MECHANICAL
MEP	MECHANICAL, ELECTRICAL, PLUMBING
MEZZ.	MEZZANINE
MF	MOMENT FRAME
MFR	MANUFACTURE(R)
M.I.	MALLEABLE IRON
MIN.	MINIMUM (NO LESS THAN; AT LEAST)
MISC.	MISCELLANEOUS
MOD.	MODIF(Y)ICATION)
MT	MISCELLANEOUS TEE (STEEL SHAPE)
MTL	METAL

N

N	NORTH
(N)	NEW
N/A	NOT APPLICABLE
N.F.	NEAR FACE
N.I.C.	NOT IN CONTRACT
NO.	NUMBER
NOM.	NOMINAL
NRFS	NEAR + FAR SIDE
N.T.S.	NOT TO SCALE
NR	NEAR
N.S.	NEAR SIDE
N/S	NORTH/SOUTH
N.W.	NORMAL WEIGHT
NWC	NORMAL WEIGHT CONCRETE

O

O/	OVER
O.C.	ON CENTER
O.D.	OUTSIDE DIAMETER
O.F.	OUTSIDE FACE
OG	OPEN GRAIN (REDWOOD)
O.H.	OPPOSITE HAND
OPG	OPENING
OPNG	OPENING
OPP.	OPPOSITE
ORIG.	ORIGINAL
O.S.	OVERSIZED (HOLE)

P

P.A.F.	POWDER ACTUATED FASTENER(S)
PC, PCS	PIECE, PIECES
PCF	POUNDS PER CUBIC FOOT
PCI	POUNDS PER CUBIC INCH
P.D.	POWDER DRIVEN
P.D.F.	POWDER DRIVEN FASTENER(S)
P.E.F.	(PLYWOOD) PANEL EDGE FASTENER
P.E.N.	(PLYWOOD) PANEL EDGE NAILING
PERF.	PERFORATED
PIPE-X	EXTRA STRONG PIPE
PIPE-XX	DOUBLE EXTRA STRONG PIPE
P.J.P.	PARTIAL JOINT PENETRATION (GROOVE WELD)
PL	PLATE
P.L.	PROPERTY LINE
PLWD.	PLYWOOD
PLYWD	PLYWOOD
P.P.	PARTIAL PENETRATION (WELD)
PREFAB.	PREFABRICATE(D)
PRELIM.	PRELIMINARY
PRESTR.	PRESTRESSED
PREV.	PREVIOUS(LY)
PROJ.	PROJECT(ED)(ING)(ION)
PSF	POUNDS PER SQUARE FOOT
PSI	POUNDS PER SQUARE INCH
PSL	PARALLEL STRAND LUMBER
PT	POINT
P.T.	POST-TENSION(ED)(ING)

R

(R)	REUSED
RAD.	RADIUS
RB	ROUND BAR (STEEL SHAPE)
R.C.	REINFORCED CONCRETE
REINF.	REINFORC(ED)(ING)
REBAR	REINFORCING BAR
REF.	REFERENCE
REQ'D	REQUIRED
RET.	RETAINING
REV.	REVIS(E)(ION)
RF	ROOF
RFG	ROOFING
RND	ROUND
R.O.	ROUGH OPENING
RW	REDWOOD

S

S.A.D.	SEE ARCHITECTURAL DRAWINGS
S.B.	SOLID BLOCKING
S.C.D.	SEE CIVIL DRAWINGS
SCHED.	SCHEDULE
SECT.	SECTION
S.E.D.	SEE ELECTRICAL DRAWINGS
SEP.	SEPARATION
SFHCS	SOCKET FLAT HEAD CAP SCREW
SHT	SHEET
SHTG	SHEATHING
SIM.	SIMILAR
S.L.B.B.	SHORT LEGS BACK TO BACK
S.L.D.	SEE LANDSCAPE DRAWINGS
SLRS	SEISMIC LOAD RESISTING SYSTEM
S.M.D.	SEE MECHANICAL DRAWINGS
S.M.S.	SHEET METAL SCREW
S.O.G.	SLAB ON GRADE
SP	SOUTHERN PINE (WOOD)
SPC.	SPAC(ES)(ING)
S.P.D.	SEE PLUMBING DRAWINGS
SPEC(S).	SPECIFICATION(S)
SQ.	SQUARE
S.S.	STAINLESS STEEL
SSS	SHORT SLOTTED (HOLE)
SSLT.	SHORT SLOTTED (HOLE)
ST	AMERICAN STANDARD TEE (STEEL SHAPE)
STAG.	STAGGER(ED)
STAGG.	STAGGER(ED)
STD	STANDARD
STFNR.	STIFFENER
STL.	STEEL
STRUC.	STRUCTURAL
SUP.	SUPPORT
SUSP.	SUSPENDED
SYM., SYMM.	SYMMETRICAL

T

T/B	TOP & BOTTOM
T&G	TONGUE & GROOVE
T.B.D.	TO BE DETERMINED
TD	TIE DOWN
THD	THREADED
THK	THICK(NESS)
THRD	THREADED
THRU	THROUGH
T.L.	TOP LOWER
T.N.	TOE NAIL
T.O.	TOP OF
T.O.C.	TOP OF CONCRETE ELEVATION
T.O.F.	TOP OF FOOTING
T.O.S.	TOP OF STEEL
TS	TUBE STEEL
T.U.	TOP UPPER
TYP.	TYPICAL

U

U.O.N.	UNLESS OTHERWISE NOTED
URM	UNREINFORCED MASONRY

V

(V), VERT.	VERTICAL
VOL.	VOLUME
V.I.F.	VERIFY IN FIELD
V.M.M.	VERIFY W/ MANUF.

W

W/	WITH
WD	WOOD
WF	WIDE FLANGE
W.H.	WEB HORIZONTAL
W/IN	WITHIN
WKG	WORKING
W.O.	WHERE OCCURS
W/O	WITHOUT
W.P.	WORK POINT
WPFG	WATERPROOFING
WT	WIDE-FLANGE TEE (STEEL SHAPE)
WT.	WEIGHT
WWF.	WELDED WIRE FABRIC

X

XS	EXTRA STRONG (PIPE)
XXS	DOUBLE EXTRA STRONG (PIPE)

SPECIAL CHARACTERS

&	AND
∆	ANGLE (MEASUREMENT)
@	AT
℄	CENTER LINE
Ø	DIAMETER OR ROUND
//	PARALLEL
⊥	PERPENDICULAR
ℙ	PLATE, PROPERTY LINE
#	POUND OR NUMBER
±	TOLERANCE

OTHER ABBREVIATIONS (PRODUCT ABBREVIATIONS):

FOR WOOD FRAMING FASTENER AND CONNECTOR ABBREVIATIONS, SEE SIMPSON STRONG-TIE WOOD CONSTRUCTION CONNECTORS CATALOG (available at www.strongtie.com).

FOR POWDER-DRIVEN FASTENERS AND CONCRETE ANCHOR ABBREVIATIONS, SEE HILTI NORTH AMERICAN PRODUCT TECHNICAL GUIDE (available at www.us.hilti.com) AND SIMPSON STRONG-TIE ANCHOR SYSTEMS CATALOG (available at www.strongtie.com).

FOR LIGHT-GAUGE STEEL CONNECTOR ABBREVIATIONS, SEE STEEL NETWORK LIGHT STEEL FRAMING CONNECTION CATALOG (available at www.steelnetwork.com) AND SIMPSON STRONG-TIE COLD-FORMED STEEL CONNECTORS CATALOG (available at www.strongtie.com).

FOR ENGINEERED WOOD PRODUCT ABBREVIATIONS, SEE ILEVEL CATALOG (available at www.ilevel.com), LP BUILDING PRODUCTS CATALOG (available at www.lpcorp.com), REDBUILT CATALOG (available at www.redbuilt.com), AND STANDARD STRUCTURES, INC., CATALOG (available at www.standardstructures.com).

"THRD STUD" INDICATES FULL FUSION WELDED STUD PER SPECIFICATION SECTION 05120.

STRUCTURAL DRAWING SHEET INDEX

S1.0	STRUCTURAL ABBREVIATIONS & SHEET INDEX
S1.1	STRUCTURAL ISOMETRIC VIEWS
S1.2	GENERAL NOTES
S2.0	FOUNDATION & 1ST FLOOR PLAN
S2.1	ROOF FRAMING PLAN
S3.0	BUILDING ELEVATIONS
S3.1	BUILDING SECTIONS
S3.10	TRUSS KEY PLAN
S3.11	TRUSS ELEVATIONS
S3.12	TRUSS ELEVATIONS
S3.13	TRUSS ELEVATIONS
S3.14	TRUSS ELEVATIONS
S4.0	TYPICAL CONCRETE DETAILS
S4.1	CONCRETE FOUNDATION DETAILS
S6.0	TYPICAL WOOD FRAMING DETAILS
S6.1	TYPICAL WOOD SHEARWALL DETAILS
S6.2	TYPICAL WOOD FRAMING DETAILS
S6.10	WOOD FRAMING DETAILS
S6.11	TRUSS CONNECTION DETAILS
S6.12	TRUSS CONNECTION & ROOF MONITOR DETAILS
S6.13	ROOF MONITOR DETAILS
S6.14	WOOD FRAMING DETAILS
S6.15	WOOD FRAMING DETAILS
S6.16	WOOD FRAMING DETAILS

SPECIAL INSPECTION AND TESTING SCHEDULE

REINFORCED CONCRETE, GUNITE, GROUT AND MORTAR:

Concrete	Gunite	Grout	Mortar	
				Aggregate Tests
				Reinforcing Tests
P				Mix Designs
P				Reinforcing Placement
				Batch Plant inspection
C				Inspect Placing
C				Cast Samples
P				Pick-up Samples
P				Compression Tests

MASONRY:

_____ Special Inspection Stresses Used
_____ Preliminary Acceptance Tests (Masonry Units, Wall Prisms)
_____ Subsequent Tests (Mortar, Grout, Field Wall Prisms)
_____ Placement Inspection of Units

ADDITIONAL INSTRUCTIONS OR OTHER TESTS AND INSPECTIONS:

P= Periodic inspection; C= Continuous inspection

Periodic inspection of wood components of seismic force resisting system, including connectors, holdowns, collectors, etc.

Periodic inspection of wood trusses with heights > 60 inches to verify installation of truss restraint/bracing

STRUCTURAL STEEL / WELDING:

_____ Sample and Test (List specific members below)
_____ Shop Material Identification
_____ Final Pass on Fillet Welds 5/16" or Smaller
__P__ Welding Inspection ☒ Shop ☒ Field where occurs
_____ Ultrasonic Inspection ☐ Shop ☐ Field
_____ High-Strength Bolting
Inspection ☐ Shop ☐ Field
☐ A325
☐ N ☐ X ☐ F
☐ A490
_____ Metal Deck Welding Inspection
_____ Reinforcing Steel Welding Inspection
_____ Metal Stud Welding Inspection
_____ Concrete Insert Welding Inspection

FILL MATERIAL:

__P__ Acceptance Tests
__C__ Placement Inspection
__P__ Field Density

STRUCTURAL WOOD:

__P__ Shear Wall Nailing Inspection
_____ Inspection of Glu-Lam Fab.
__C*__ Inspection of Truss Joist Fab. *unless Fabricator certified
_____ Sample and Test Components per CBC 1704.2.5.1

D:\AcadTemp\Revit\20056-CSU Stanislaus-Struc-R2019_sarah.aher@marstructuraldesign.com.rvt

APPROVED
DIV. OF THE STATE ARCHITECT
APP: 02-119316 INC:
REVIEWED FOR
SS☐ FLS☐ ACS☑
DATE: 03/24/2022

Division of the State Architect

Office of the State Fire Marshal

OFFICE OF THE STATE FIRE MARSHAL
APPROVED FIRE AND PANIC ONLY
03/14/22
21-0498
Approval of this plan does not authorize or approve any omission or deviation from applicable requirements. Final approval is subject to field inspection. One set of approved plans shall be available on the project site at all times.

CSUS CHILD DEVELOPMENT CENTER

CALIFORNIA STATE UNIVERSITY, STANISLAUS
ONE UNIVERSITY CIRCLE
TURLOCK, CA 95382

ehdd.

PIER 1, BAY 2
THE EMBARCADERO
SAN FRANCISCO, CA 94111

INFO@EHDD.COM
+1 415-285-9193

Consultant

Mar
Structural Design
2332 Fifth Street, Suite D
Berkeley, CA 94710
510-991-1101

Stamp

REGISTERED PROFESSIONAL ENGINEER
DAVID CLIFTON MAR
No. S3951
Exp. 3-31-22
STRUCTURAL
STATE OF CALIFORNIA

Printing Date

95% CONSTRUCTION DOCUMENTS	06.25.2021
PERMIT SET	08.16.2021
PERMIT SET - DSA V2	12.15.2021
PERMIT SET - SFM	12.21.2021

Revisions and Description Date

Scale
1" = 1'-0"

Drawn by
SCA

EHDD Job Number
2020.056

Sheet Title
STRUCTURAL ABBREVIATIONS & SHEET INDEX

Sheet Number
S1.0 V3

12/9/2021 11:56:08 PM

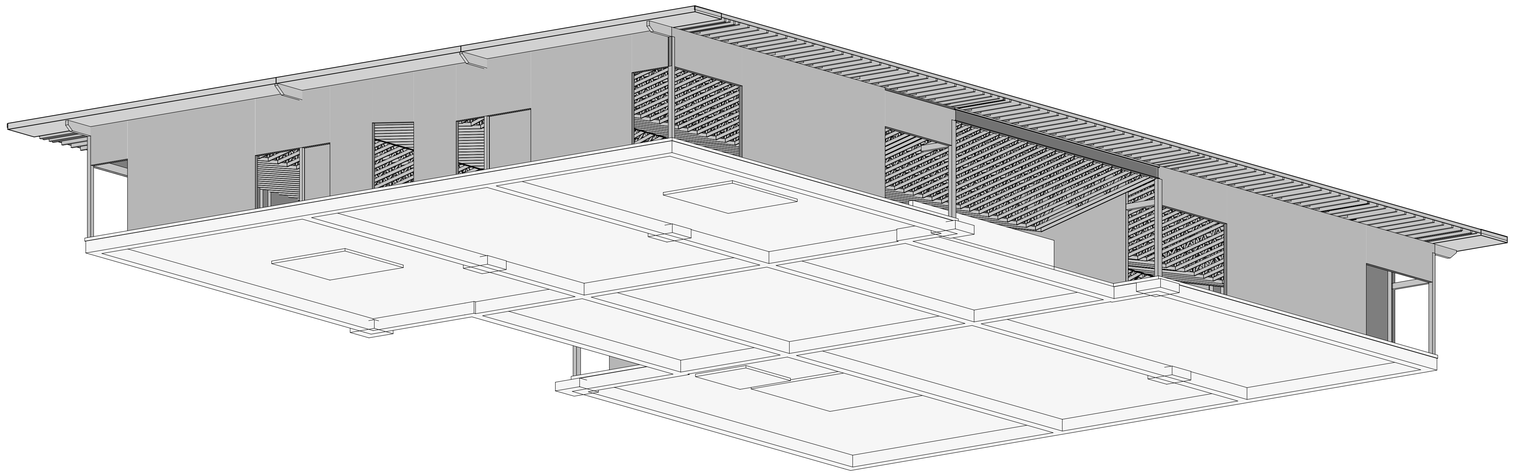

2 S1.1 BUILDING ISO- BELOW

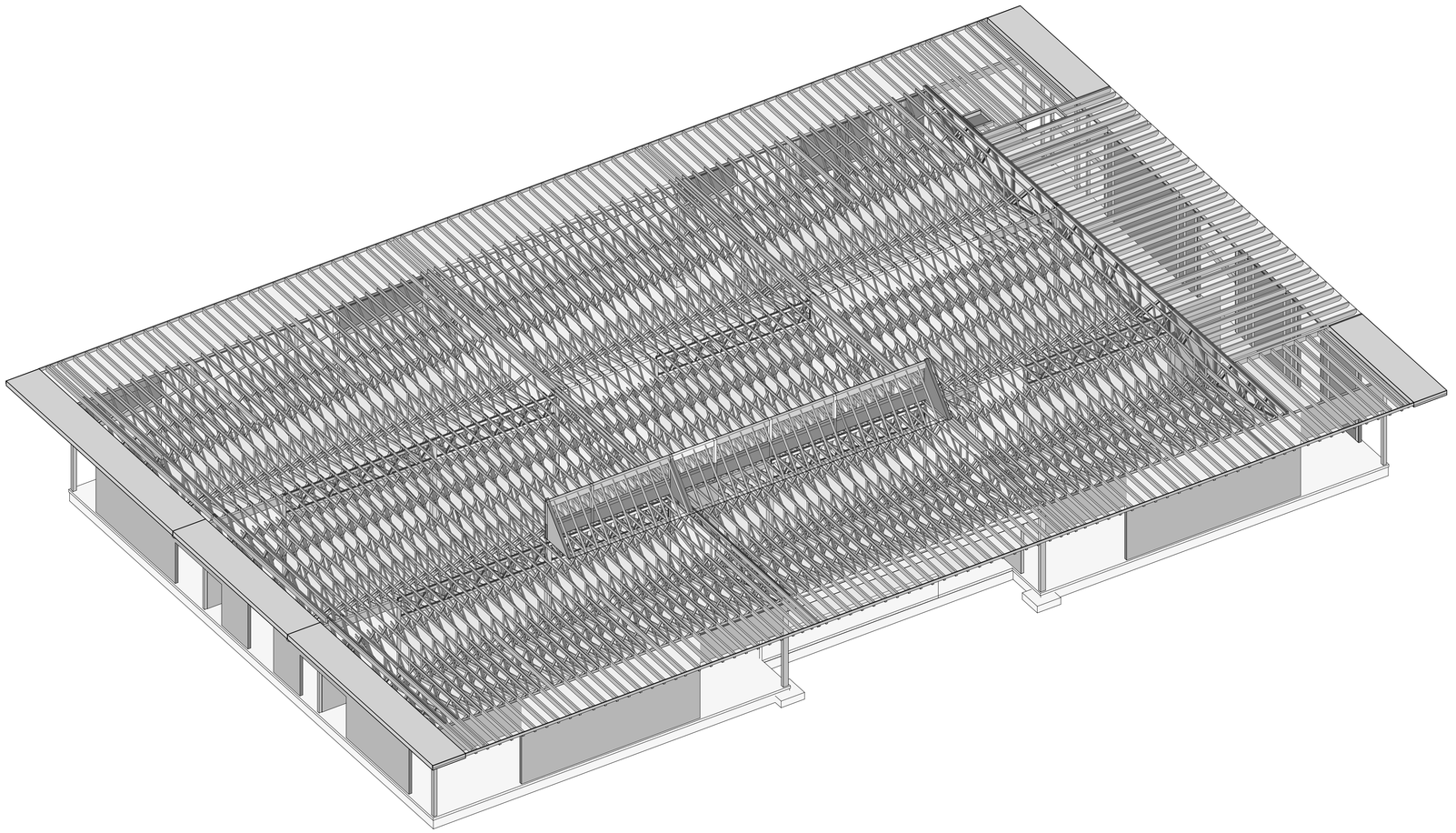

1 S1.1 BUILDING ISO- ABOVE

D:\AcadTemp\Revit\20056-CSU Stanislaus-Struc-R2019_sarah.aher@marstructuraldesign.com.rvt

Division of the State Architect

APPROVED
DIV. OF THE STATE ARCHITECT
APP: 02-119316 INC:
REVIEWED FOR
SS☐ FLS☐ ACS☑
DATE: 03/24/2022

Office of the State Fire Marshal

OFFICE OF THE STATE FIRE MARSHAL
APPROVED FIRE AND PANIC ONLY
03/14/22
21-0498
Approval of this plan does not authorize or approve any omission or deviation from applicable requirements. Final approval is subject to field inspection. One set of approved plans shall be available on the project site at all times.

CSUS CHILD DEVELOPMENT CENTER

CALIFORNIA STATE
UNIVERSITY, STANISLAUS
ONE UNIVERSITY CIRCLE
TURLOCK, CA 95382

ehdd.

PIER 1, BAY 2
THE EMBARCADERO
SAN FRANCISCO, CA 94111

INFO@EHDD.COM
+1 415-285-9193

Consultant

Mar
Structural Design
2332 Fifth Street, Suite D
Berkeley, CA 94710
510-991-1101

Stamp

REGISTERED PROFESSIONAL ENGINEER
DAVID CLIFTON MAR
No. S3951
Exp. 3-31-22
STRUCTURAL
STATE OF CALIFORNIA

Printing	Date
95% CONSTRUCTION DOCUMENTS	06.25.2021
PERMIT SET	08.16.2021
PERMIT SET - DSA V2	12.15.2021
PERMIT SET - SFM	12.21.2021

Revisions and Description	Date

Scale

Drawn by
SCA

EHDD Job Number
2020,056

Sheet Title
STRUCTURAL ISOMETRIC VIEWS

Sheet Number
S1.1 **V3**

12/9/2021 11:56:08 PM

STRUCTURAL NOTES

DIVISION 01: GENERAL CONDITIONS

SECTION A: GENERAL REQUIREMENTS

1. All work shall conform to the 2019 California Building Code, as modified by state and local jurisdiction.

2. These Structural Notes supplement the Project Specifications, and provide design loads and material properties not listed in the Project Specifications.

3. These structural drawings are copyrighted instruments of service of Mar Structural Design (MSD), for sole use for this project.

4. The Structural Drawings show the structural features. Some dimensions and elevations are defined on the Architectural Drawings. See Architectural and other project drawings for finishes, depressions, curbs, openings, inserts and other features that need to be coordinated with these drawings.

5. Bound specifications have been prepared for this project. These notes complement the project specifications that will, among other things, define responsibilities, products, and workmanship issues. Reading these notes without reading the specifications can result in misunderstandings. There is not a one-to-one correspondence between these notes and the specifications, i.e., some numbered sections appear in the notes but not the specifications and vice versa.

6. In the event of conflict between these structural notes, the project specifications and the drawings, consult with the Architect before proceeding.

7. Compare structural drawings with architectural, mechanical, and electrical and plumbing drawings before commencing work. Notify Architect of any discrepancies and do not proceed with affected work until they are resolved. In the case of conflict between the drawings and the specifications, the most costly option to the Contractor applies unless otherwise expressly allowed by the Architect's response to RFI.

8. Do not scale the drawings to determine dimensions, instead use written dimensions. Where no dimension is provided, consult with the Architect for clarification before proceeding with the work. Where member locations are not specifically dimensioned, members are either located on column lines, or equally spaced between members on column lines or between members otherwise located.

9. Unless otherwise shown or noted, all typical details shall be used where applicable. All details shall be considered typical at similar conditions.

10. The Contractor and Special Inspector shall contact the Architect regarding any questions of interpretation of these specifications and drawings.

11. Submit shop drawings, design-build calculations, and product data for review as required by specifications prior to fabrication. Do not fabricate prior to receiving review comments. Each shop drawing submittal to the Engineer shall be submitted electronically by:
    1. Except for mock-ups, samples, and as otherwise specified, all submittals to be in electronic form (Adobe Portable Document Format).
    2. Submit shop drawings, contractor-furnished design calculations, and product data for review as required by specifications prior to fabrication. Do not fabricate prior to receiving review comments. In addition submit the following:
        1. Shop drawings and structural calculations for lateral and vertical support of any equipment exceeding 400 pounds.
        2. Penetration plans, using structural drawings as backgrounds, showing the size and location of all slab openings, sleeves, cores and penetrations, including HVAC, electrical, telephone, fire sprinkler, plumbing and any other utilities. This includes pipes or conduits routed through or embedded within structural elements such as beams, slabs or walls.

12. Safety Measures:

    1. Contractor is solely and completely responsible for job site conditions including safety of people and property, and for all necessary independent engineering reviews of these conditions.

    2. Install shoring and bracing of soil, and of existing and new structures, where needed to adequately support imposed vertical and lateral loads. Maintain shoring and bracing until the new structure can support the anticipated loads.

    3. Engineer's job site visits are not intended to include review of adequacy of Contractor's safety measures.

13. Any openings, holes, cuts or discontinuities not shown on the structural drawings and extending into or through structural elements require Engineer's prior approval and may require special structural detailing.

SECTION B: STRUCTURAL TESTING, INSPECTION, AND OBSERVATION

1. Tests and inspections for all items will be provided as required by California Building Code and all applicable local ordinances.

2. The owner will retain an independent testing agency to perform all required testing and inspections.

3. The Contractor is responsible for coordinating with Owner's Testing Agency and Special Inspector to schedule all required tests and inspections. See specifications for specific items requiring testing and inspection.

4. Unless otherwise shown or noted: install, test, and inspect manufactured structural products in accordance with manufacturer's recommendations and applicable evaluation service reports.

5. Structural Observation: In addition to inspection by Special Inspector, Structural Engineer will review construction for general conformance with Structural Drawings. Contractor shall notify Architect and Structural Engineer at least five working days prior to concealing structural elements. Structural Engineer will then determine if a site visit is appropriate. Notification shall include the following items:

    1. Foundation and slab subgrade excavation and compaction(by Geotechnical Engineer).

    2. Reinforcement and embedded items, prior to concrete placement.

    3. Structural framing and shear walls, prior to concealment by finish surfaces or fireproofing.

SECTION C: STRUCTURAL DESIGN BASIS

1. Design is based on the 2019 California Building Code, CSU Seismic Requirements (March 5, 2020 ed.) and applicable local ordinances.

2. Design vertical live loads (unfactored loads not including live load reductions):

    1. Roof
        1. Live Load — 20 psf (300 lbs on 2'-6"x2'-6" area)
        2. PV Dead Load — 6 psf

3. Design lateral loads are based on the following criteria:

    1. Risk Category — III

    2. Wind
        1. Basic Wind Speed — 100 (3-second gust)
        2. Exposure Category — C
        3. Internal Pressure Coef — C for design-build cladding/glazing
        4. Cladding Pressure — +/- 0.18 for main bldg
           specifications require — 30 psf (Walls), 65 psf (Soffit), unless design-build calculations

    3. Seismic
        1. Importance Factor, I — 1.25
        2. S_s — 0.663g (0.2 sec site specific response)
        3. S_1 — 0.264g (1.0 sec site specific response)
        4. Site Soil Class — D
        5. S_{ds} — 0.561g (0.2 sec site specific response)
        6. S_{d1} — n/a (1.0 sec site specific response)
        7. SDC — D (Seismic Design Category)
        8. Basic Lateral System:
           1. Light-framed walls sheathed with wood structural panels
        9. T_a — 0.17 sec (Approximate Fundamental Period)
        10. R — 6.5 (Response Modification Factor)
        11. C_s — 0.108 g (Seismic Response Coefficient)
        12. Design Base Shear — 75 kips (53 kips ASD level)
        13. Analysis Procedure — Equivalent Lateral Force Analysis

    4. The seismic force resisting system (SFRS) of the structure comprises the following elements described in the drawings:

        1. Shear walls, collectors, and associated connections;

        2. Other elements labeled "COLL" and "SFRS" in the drawings.

SECTION D: CONTRACTOR FURNISHED DESIGN- STRUCTURAL ITEMS

1. Contractor Furnished Design Items

    1. Storefronts and Curtain Walls.

    2. Light Gauge Steel or Wood Interior Partitions, unless otherwise shown on plans.

    3. Support and seismic bracing for Mechanical, Electrical, Plumbing, and Fire Protection systems.

    4. Fall Protection Anchors.

    5. Pre-fabricated Wood Roof Trusses.

    6. Support and Seismic Bracing for Solar Arrays.

2. General:

    1. All contractor furnished design items shall be designed by engineers engaged by the General Contractor. Contract Documents shall be used as the basis of design. Designs shall address all code-required loads, including gravity, wind and seismic.

    2. Submit shop drawings and structural calculations for all contractor furnished design items, stamped and signed by a California-licensed Civil or Structural Engineer.

    3. Shop drawings shall indicate materials, member sizes, internal connections, and connections back to primary structure.

    4. Contractor furnished design items shall not be installed until their shop drawings and structural calculations have been approved by the University and the Architect. The accepted designs for the pre-fabricated wood roof trusses and the support and seismic bracing for solar arrays shall be submitted for review by the University Seismic Review Board (SRB).

3. Contractor Furnished Design Criteria:

    Cladding, glazing, and exterior non-bearing walls:
    1. Cladding, glazing and non-load bearing walls shall accommodate interstory seismic drifts of at least 2.0% without damage that could result in falling hazards or injuries and 1.0% while remaining weathertight and substantially free of damage.
    2. Cladding and glazing systems shall resist out-of-plane wind loads per Section C "Structural Design Basis."
    3. Wall out-of-plane deflections shall not exceed L/240 for exterior facades under code minimum design wind loads, unless designer demonstrates that facade can accommodate greater deflections without loss of watertightness.
    4. Unless noted otherwise, walls, cladding, and glazing systems shall accommodate the greater of 3/4" and L/360 vertical deflection on all beams and headers above and below, under live load plus that portion of dead load imposed after cladding or glazing system installation. L is defined as the overall length of the framing member above or below the glazing system.
    5. Install glazing systems only after all sustained (dead) loads are in place.

    2. Interior partitions:
    1. Connection at top of partitions shall accommodate the greater of 7/8" and L/360 vertical deflection, under live load plus that portion of dead load imposed after cladding or glazing system installation. L is defined as the overall length of the framing member above or below the glazing system.
    2. Out-of-plane deflection under wind or seismic load shall not exceed L/240.

    3. Wood Roof Trusses
    1. Design for loading indicated on drawings. Drawings indicate unfactored (ASD) dead & live loads (DL,LL) in pounds per linear foot, unless otherwise noted on the drawings. Wind loads shall be calculated by the truss manufacturer based on Section C "Structural Design Basis". Wind loads are applied normal to the surface, dead loads are applied vertically across a sloping surface, and live loads are applied vertically across a horizontal projection on the sloping surface.
    2. Truss bottom chord shall be designed for a vertical dead load of 8 pounds per square foot (psf) minimum. This load need not be added to the design loads indicated on plan.
    3. Truss bottom chord shall be checked for the wind uplift case combined with 60% of specified top chord dead load, and no bottom chord dead chord. Provide bottom chord bracing as needed to resist code loads.
    4. Provide full depth truss blocking along all bearing and shear walls shown on plan above or below. Truss blocking above shear walls shall be designed for a minimum 500 pounds per linear foot ASD level lateral seismic load, unless otherwise shown on plan.
    5. Vertical deflection shall be limited to L/240 for dead + live loads, L/480 for live load, or 7/8" maximum.

    4. Mechanical, electrical, plumbing and fire protection systems and equipment:
    1. Contractor is responsible for vertical and lateral support and anchorage of all equipment and utilities, and transfer of such forces back to primary structural elements shown on the structural drawings.
    2. Support and bracing shall be designed to comply with CBC and ASCE 7, Chapter 13.
    3. Lateral seismic design forces on all life-safety systems and equipment shall be increased by an importance factor of 1.50.
    4. Shop drawings and structural calculations shall be submitted for support and bracing of all floor-mounted equipment over 400 pounds and all ceiling-hung equipment over 20 pounds.
    5. Pipes, conduits and ducts: Unless specifically designed by a California-licensed Civil or Structural Engineer, bracing shall conform to Seismic Hazard Level A in SMACNA "Seismic Restraint Manual: Guidelines for Mechanical Systems," most recent edition, except:
        1. Bracing of life-safety systems and components shall be increased by 50% (importance factor = 1.50).
        2. Hangers 12 inches or less in length shall be capable of swaying at least 30 degrees out of plumb in either direction without losing strength, unless augmented by seismic bracing.
        3. Ducts four square feet or greater in cross-sectional area shall be braced.
        4. Pipes:
            1. Brace all pipes containing gas or liquid fuel.
            2. Brace all pipes 1-1/4 inch nominal diameter or greater in boiler, electrical and mechanical rooms.
            3. Brace all other pipes 2-1/2-inch nominal diameter or greater.
            4. Fire sprinkler pipe bracing shall comply with both ASCE 7, Chapter 13, and NFPA 13.

DIVISION 31: EARTHWORK

SECTION 31 60 00: FOUNDATIONS

1. The foundation design is based on a Geotechnical Report prepared by Krazan & Associates, Inc. dated February 18, 2021.

2. Except where otherwise shown, excavations shall be made as near as possible to the neat lines required by the size and shape of the structure. Foundations may be poured without the use of side forms where possible. If the trenches cannot stand, fully form sides to dimensions shown.

3. Do not allow water to stand in trenches. If bottoms of trenches become softened due to rain or other water before concrete is cast, excavate softened material and replace with properly compacted backfill or concrete at no cost to the owner.

4. Extent of excavation for engineered fill shall extend min. 12 inches below foundations and min. 5 ft beyond building perimeter, per Geotechnical Report.

5. Excavations and subgrade preparation will be observed by the Geotechnical Engineer. Notify the Geotechnical Engineer five days prior to excavation and subgrade preparation work.

6. All excavations are to be inspected by the Geotechnical Engineer prior to placing rebar. Forms and reinforcing are to be inspected by Special Inspector prior to placing concrete.

DIVISION 03: CONCRETE

SECTION 03 20 00: REINFORCING STEEL

1. All reinforcing steel bars shall be ASTM A706 Grade 60, unless otherwise noted.

2. T-heads:

    1. T1-Head: End anchorage plate with net area at least 4 times reinforcing bar area.

    2. T2-Head: End anchorage plate with net area at least 9 times reinforcing bar area.

    3. T1-heads shall be used unless otherwise noted on the drawings.

    4. T2-heads may be used in lieu of T1-heads, but T1-heads may not not be used where T2-heads are required.

    5. See specifications for additional T-head requirements.

3. Ends of Bars: all reinforcing ending at wall and slab edges, and at the ends of beams, shall terminate with hooks (90, 135 or 180 degree), T-heads (T1 or T2), or shall lap splice with U-bar end caps or with dowels fastened into existing adjacent concrete or structural steel.

4. Anchor Bolts and Rods (unless otherwise noted on the drawings):

    1. Wood Framing:
        1. Typical anchor bolts for wood sills and ledgers: ASTM F1554 Gr. 36, A36 or A307.
        2. Hold down anchor bolts for single-piece hardware such as Simpson HDU or HDQ: ASTM F1554 Gr. 36, A36, or A307.

    2. Steel Framing:
        1. Anchor rods for typical base plates and steel connections: F1554, Gr. 55.
        2. Anchor rods for collector ties: ASTM F1554 Gr. 105.

    3. Nuts and Washers: see Specifications.

5. All welded rebar shall be low alloy A706. Welding rebar is not permitted except where shown on the drawings.

6. "DZL" or "DBA" refers to TPW Nelson deformed bar concrete anchors with complete penetration welds using Nelson proprietary welding equipment.

7. Unless otherwise noted on the drawings, all mechanical couplers shall be Type 2.

8. Lap splice all bars as shown in the Typical Lap Splices detail, unless otherwise shown on the drawings.

9. Concrete Cover: Unless otherwise shown on the drawings, maintain coverage to face of reinforcing bars as follows:

Location	Clear Cover
Cast against earth:	3 in.
Slab-on-grade over earth or VB:	2 in.
Exposed to earth or weather:	
Slabs, Walls	2 in. (1-1/2 in. for #5 & smaller)
Beam ties	1-1/2 in.
Beam primary reinf.	1-1/2 in.
Not exposed to earth or weather:	
Slabs, walls, joists	3/4 in.
Beam & column ties	1-1/2 in.
Beam & column primary reinf.	1-1/2 in.

Notes:

1. Tolerances per ACI 117, except that clear cover may not be reduced in fire-rated members or assemblies.

10. The uppermost and lowermost horizontal reinforcement for concrete walls shall be placed within one half of the specified spacing at the top and bottom of the wall and at all construction joints.

11. Pipes, Conduits and Other Embedded Items: See Specifications.

SECTION 03 25 00: CONCRETE AND MASONRY ANCHORS

1. Epoxy dowels in concrete:

    1. Epoxy dowels are not permitted for shear wall holdown or braced frame anchor rods.

    2. Owner's Testing Agency to verify diameter, depth and cleanliness of drilled holes.

    3. Owner's Testing Agency to torque test all epoxy-grouted threaded rods and bolts:

1/2" diam. thrd. rod	20 ft lbs
5/8" diam. thrd. rod	30 ft lbs
3/4" diam. thrd. rod	45 ft lbs
7/8" diam. thrd. rod	60 ft lbs
1" diam. thrd. Rod	80 ft lbs

    4. Owner's Testing Agency to test 25% of the first 100 dowels installed in direct tension to the following values:

#3 bar	5,000	3/8" Thrd. Rod	3,500 #
#4 bar	9,000	1/2" Thrd. Rod	6,000 #
#5 bar	14,000	5/8" Thrd. Rod	9,000 #
#6 bar	20,000	3/4" Thrd. Rod	12,000 #
#7 bar	27,000	7/8" Thrd. Rod	18,000 #
#8 bar	36,000	1" Thrd. Rod	22,000 #

    5. If testing of the first 100 dowels results in a "pass" rate of 95% or better, sampling may be reduced to 10% of the remaining work.

2. Mechanical anchors: Owner's Testing Agency to make periodic inspections during anchor installation to verify anchor type and dimensions, concrete thickness and type (normal weight vs. lightweight), anchor embedment, and adherence to manufacturer's installation instructions.

SECTION 03 30 00: CAST-IN-PLACE CONCRETE

1. Concrete Mix Schedule:

Location	f'c (psi)	Age (days)	Aggr. Type (wt)	Aggregate Max. Size (inches)	Max. Portland SCM (lb/cy)	SCM* (%)
Fdn./S.O.G.	4,000	56	Normal	3/4-1.5	200	50-70

* SCM = Supplementary Cementitious Material content, measured as percentage of total cementitious material by weight. See Specifications for further SCM requirements.

2. Water-to-cementitious material (W/CM) ratio not to exceed 0.50. Use water-reducing admixtures as needed.

3. Type 1 Cement shall not be used.

DIVISION 05: METALS

SECTION 05 12 00: STRUCTURAL STEEL

1. Structural steel wide-flange shapes shall conform to ASTM A913 or ASTM A992 (Fy = 50 ksi). See Specifications for additional requirements for moment frame members and members with flange thickness exceeding 2 inches.

2. Pipe sections shall conform to ASTM A53, Type E or S, Grade B (Fy = 35 ksi). Finish black, except where required to receive hot-dip galvanized coating.

3. Round HSS shall conform to ASTM A500 Grade C (Fy = 46 ksi); ASTM A847 (Fy = 50 ksi) may be substituted.

4. Square or rectangular HSS shall conform to ASTM A500 Grade C (Fy = 50 ksi); ASTM A847 (Fy = 50 ksi) may be substituted.

5. HP sections shall conform to A572 Grade 50.

6. M and S sections shall conform to ASTM A36 (Fy = 36 ksi).

7. Structural steel channels, angles and miscellaneous iron shall conform to ASTM A36 (Fy = 36 ksi); ASTM A572 Grade 50 may be substituted.

8. Non-seismically loaded structural steel plates and bars:

    1. ASTM A36 (Fy = 36 ksi); ASTM A572 Grade 50 may be substituted.

    2. See Specifications for additional requirements where thickness exceeds 2 inches.

9. Seismically loaded structural steel plates and bars:

    1. ASTM A572 Grade 50 meeting minimum notch toughness requirements given in Specifications.

    2. Seismically loaded plates include, but are not limited to, gusset and connection plates in braced frames, splice plates in collectors, continuity plates in moment frames and any other plate designated "SLRS" or "CVN tough" on the drawings.

10. "A325" indicates a high-strength bolt assembly conforming to ASTM F3125 Grade A325 Type 1 or Grade F1852, with ASTM A563 heavy hex nuts and ASTM F436 or F959 Grade 325 washers as required by RCSC. ASTM A325 Type 3 bolts may be substituted only where hot-dip galvanizing is not required.

11. "A490" indicates a high-strength bolt assembly conforming to ASTM F3125 Grade A490 or Grade F2280, with ASTM A563 heavy hex nuts and ASTM F436 or F959 Grade 490 washers as required by RCSC. "A490" bolts shall not be hot-dip galvanized.

12. All high-strength bolts shall be fully pre-tensioned unless otherwise noted. Bolts other than high-strength shall be installed snug-tight.

13. For anchor bolt material specifications, see Section 03 20 00, Reinforcing Steel.

14. Threaded studs and headed shear studs shall conform to AWS D1.1, and shall be carbon steel studs conforming to ASTM A108 Grades 1010 through 1020, unless otherwise noted. Stud bases shall be full-fusion arc welded. Stud welding shall be qualified through tests per AWS D1.1, Section 7.6-7.8. Where stainless steel studs are required by the Notes or Drawings, studs to be post-annealed as required to prevent brittle failure.

15. Welds shall be E70XX unless otherwise noted in the Project Specifications, and shall have a CVN toughness of at least 40 ft-lbs at 70 degrees Fahrenheit, unless otherwise noted in the Project Specifications

16. Exposure to Weather: all steel and steel fasteners exposed to weather and moisture shall be hot-dip galvanized, corrosion resistant (e.g. weathering steel or stainless steel) or otherwise protected from corrosion. See Project Specifications for additional information.

DIVISION 06: WOOD

SECTION 06 10 00: ROUGH CARPENTRY

1. Wood connector call-outs on the Drawings refer to Simpson Strong-Tie Connectors unless otherwise noted. See Specifications regarding possible substitution of other manufacturer's connectors may only be used if approved as an equal or better substitution, substantiated by evaluation service reports and Simpson-equivalent reference numbers and labels. Unless otherwise shown on the Drawings:

    1. Fill all fastener holes with the maximum number, diameter and length of fasteners (nails, bolts, etc.).

    2. For straps where manufacturer offers nailed or bolted alternatives, install nails.

2. All machine bolts through wood shall be ASTM A307, installed through holes 1/16 inch larger than diameter of bolt. Provide washers under all bolt heads and nuts bearing on wood. Provide malleable iron washers (ASTM A47) unless otherwise shown on the drawings. Provide standard steel cut washers (ASTM F844) only where specifically allowed on the drawings.

3. All wood and wood products in contact with concrete or masonry shall be pressure-treated. Species and grade for pressure-treated products shall match that specified for untreated similar lumber or wood products (i.e., pressure-treated Hem-Fir may not be substituted for pressure-treated Douglas-Fir), unless otherwise noted on the drawings.

4. Corrosion-resistant fasteners and washers shall be used where exposed to weather or soil, or in contact with pressure-preservative-treated or fire-retardant-treated wood. Refer to the Specifications for additional requirements.

SECTION 06 11 00: FRAMING LUMBER

1. All framing lumber shall be Douglas Fir-Larch graded per WCLIB Grading Rules. All framing lumber, including that used for trusses and glulams shall be Forest Stewardship Council (FSC) certified. All lumber shall be surfaced dry (SD, MC 19 or less) or kiln dried (KD, MC 19 or less), except that heavy timber posts may be surfaced green. MC = Maximum moisture content at initial use, in percent.

2. Grading:

Item	Sizes	Grade
Studs & Posts	2x, 3x, 4x	No. 2
Posts & Timbers	6x, 8x	No. 1
Sill & Top Plates	Any	No. 1 or Construction
Beams & Splints	Any	No. 1
Roof Joists	Any	No. 1
T & G Decking	Any	Select
Ledgers	Any	No. 1
Blocking & Nailers	Any	No. 1 or Construction
Plates & Misc.	2x	No. 2 or Construction

3. See Project Specifications and Drawings for bridging and blocking requirements.

4. Refer to minimum fastening schedule in CBC Table 2304.10.1, except where more restrictive requirements are given on the drawings.

SECTION 06 12 00: WOOD STRUCTURAL PANELS: PLYWOOD

1. Floor Sheathing:

    1. APA Rated T&G Sturd-I-Floor, Exposure 1, unless otherwise noted on the drawings. All sheathing shall be Forest Stewardship Council (FSC) certified.

    2. Thickness as shown on the drawings.

    3. Long panel edges to be tongue and groove. Tongue and groove edges may be omitted where edges are blocked.

    4. Panels to be laid with long panel edges perpendicular to floor joists. Block edges where noted on the drawings. All cut panels to be equal or greater than 24 by 48 inches. Apply a continuous bead of glue to all floor joists before setting floor plywood.

2. Wall sheathing:

    1. APA-rated CDX, Exposure 1, unless otherwise noted on the drawings. All sheathing shall be Forest Stewardship Council (FSC) certified.

    2. Plywood meeting DOC PS-1 (not OSB per DOC PS-2).

    3. Thickness: 15/32" (1/2" nominal), unless otherwise shown on the drawings.

3. Roof sheathing:

    1. APA-rated sheathing, Exposure 1, unless otherwise noted on the drawings.

    2. Plywood per DOC PS-1 (not OSB per DOC PS-2).

    3. 15/32" (1/2" nominal) thickness, unless otherwise shown on the drawings.

    4. All roof sheathing nails shall be deformed shank.

SECTION 06 17 20: STRUCTURAL COMPOSITE LUMBER

1. Laminated Strand Lumber (LSL) to meet or exceed grade 1.5E (Fb = 2,250 psi; Fv = 400 psi; E = 1,500,000 psi). Products:

    1. Timberstrand LSL by Weyerhaeuser,

    2. LP SolidStart LSL by Louisiana-Pacific Corp., or

    3. Approved equal or better substitution.

2. Laminated Veneer Lumber (LVL) to meet or exceed grade 1.9E (Fb = 2,600 psi; Fv = 285 psi; E = 1,900,000 psi). Products:

    1. Microllam LVL by Weyerhaeuser,

    2. Versalam LVL by Boise Cascade

    3. LP SolidStart LVL by Louisiana-Pacific Corp., or

    4. Approved equal or better substitution.

3. Parallel Strand Lumber (PSL) to meet or exceed grade 2.0E (Fb = 2,900 psi; Fv = 290 psi; E = 2,000,000 psi). Product: Parallam PSL by Weyerhaeuser or approved equal or better substitution.

SECTION 06 17 53: METAL PLATED WOOD TRUSSES

1. Submit shop drawings and engineering calculations prior to fabrication. University approval required prior to installation. Indicate truss framing plans, species, and grades of lumber used; design loading and allowable stress increase; force analysis of each member; pitch, span and spacing of trusses; gauge thickness, nominal sizes and locations of connectors at joints; bearing and anchorage details; framed openings; permanent bracing, bridging, stiffeners and blocking; and all truss-to-truss and rafter-to-truss connections. Indicate heel dimension.

2. Shop drawings to bear seal of Civil or Structural Engineer registered in the State of California. Truss designer responsibilities shall be as described in WTCA 1-1995, with the clarification to section 6.2.9 that "connection requirements" (truss-to-truss girder, truss ply-to-ply and field splices) means the complete design of such connections, not just the listing of connection design loads.

3. Shop fabrication of all wood trusses shall be certified by recognized independent testing agency per CBC 1704.2.5.1. Otherwise, special inspection shall be provided during fabrication.

4. Submit manufacturer's instructions on lateral bracing.

5. Manufacturer to provide all blocking, bridging, and stiffeners as required for proper installation.

6. Materials: Stress-grade lumber members. All framing lumber shall be Forest Stewardship Council (FSC) certified. Galvanized connector plates typical. Powder coated & painted connector plates where exposed to view, see Architectural specs.

SECTION 06 18 50: STRUCTURAL GLUED LAMINATED TIMBER (GLULAM)

1. Glulam Beam (GLB) Species and Combinations:

Loc'n	Span Type	Combination and Species	Fbx bott. (psi)	Fbx top (psi)	Fvx (psi)	Ex (psi)	Camber radius (ft)
Int.	Simple	24F-V4 (DF)	2,400	1,850	265	1,800,000	3,500
Int.	Multiple*	24F-V8 (DF)	2,400	2,400	265	1,800,000	None

* Multiple = beams continuous over supports or with cantilevers.

D:\AcadTemp\Revit\20056-CSU Stanislaus-Struc-R2019_sarah.aher@marstructuraldesign.com.rvt

Division of the State Architect

APPROVED
DIV. OF THE STATE ARCHITECT
APP: 02-119316 INC:
REVIEWED FOR
SS☐ FLS☐ ACS☑
DATE: 03/24/2022

Office of the State Fire Marshal

OFFICE OF THE STATE FIRE MARSHAL
APPROVED FIRE AND PANIC ONLY
03/14/22
21-0498
Approval of this plan does not authorize or approve any omission or deviation from applicable regulations. Final approval is subject to field inspection. One set of approved plans shall be available on the project site at all times.

CSUS CHILD DEVELOPMENT CENTER

CALIFORNIA STATE UNIVERSITY, STANISLAUS
ONE UNIVERSITY CIRCLE
TURLOCK, CA 95382

ehdd.

PIER 1, BAY 2
THE EMBARCADERO
SAN FRANCISCO, CA 94111

INFO@EHDD.COM
+1 415-285-9193

Consultant

Mar
Structural Design
2332 Fifth Street, Suite D
Berkeley, CA 94710
510-991-1101

Stamp

REGISTERED PROFESSIONAL ENGINEER
DAVID CLIFTON MAR
No. S3951
Exp. 3-31-22
STRUCTURAL
STATE OF CALIFORNIA

Printing	Date
95% CONSTRUCTION DOCUMENTS	06.25.2021
PERMIT SET	08.16.2021
PERMIT SET - DSA V2	12.15.2021
PERMIT SET - SFM	12.21.2021

Revisions and Description	Date

Scale

Drawn by
SCA

EHDD Job Number
2020,056

Sheet Title
GENERAL NOTES

Sheet Number
S1.2 **V3**

12/9/2021 11:56:11 PM

FOUNDATION PLAN LEGEND

- CONCRETE SLAB
- GRADE BEAM OR SPREAD FOOTING
- CONCRETE CURB O/ SLAB
- CONCRETE WALL
- DENOTES DF OR GLULAM COLUMN
- MIN. LENGTH IN FEET (O.F. OF POST TO O.F. OF POST)
- SHEARWALL TYPE, PER 1/S6.1
- WOOD STUD SHEARWALL
- HDU11 HOLDDOWN, U.O.N., SEE 2/S6.1
- SLAB STEP

PLAN NOTES

1. SEE SHEET S1.2 FOR STRUCTURAL NOTES.
2. SEE ARCHITECTURAL DRAWINGS FOR ALL DIMENSIONS, NON-STRUCTURAL PARTITIONS, FINISH FLOOR ELEVATIONS, SLOPE AND DRAINAGE NOT SHOWN.
3. SLAB EDGE DIMENSIONS SHALL BE COORDINATED WITH ARCHITECTURAL DRAWINGS. SEE STRUCTURAL NOTES AND TYPICAL DETAILS FOR ADDITIONAL INFO.
4. COORDINATE LOCATION AND SIZE OF ALL OPENINGS AND EQUIPMENT WITH MECHANICAL DRAWINGS. SEE MECHANICAL DRAWINGS FOR ALL MECHANICAL EQUIPMENT AND PAD, OPENING SIZES AND LOCATIONS NOT SHOWN.
5. SEE ARCHITECTURAL DRAWINGS FOR ALL CONCRETE CURBS AND FORMWORK NOTES.
6. CONTRACTOR SHALL BE RESPONSIBLE FOR ALL TEMPORARY SHORING AND BRACING DURING CONSTRUCTION.
7. CONCTRACTOR TO VERIFY EXISTING CONDITIONS AND NOTIFY EOR OF DISCREPANCIES PRIOR TO BEGINNING WORK.

COLUMN SCHEDULE

COL ID	COL SIZE	MATERIAL	COL BASE	COL CAP
C1	4x6	DF	N/A	N/A
C2	6x6	DF	N/A	N/A
C3	6x8	DF	N/A	N/A
C4	6x10	DF	N/A	N/A
C5	6 3/4x7 1/2	GLC	ABU88Z	N/A
C6	6 3/4x10 1/2	GLC	7/S4.1	N/A
C7	8 3/4x9	GLC	ABU1010Z	N/A

POSTS & CAPS PER SCHEDULE U.O.N.
SEE GENERAL NOTES FOR GRADE REQUIREMENTS.

FOOTING SCHEDULE

FTG ID	FTG SIZE	DEPTH
F3.5	3'-6" x 3'-6"	1'-3"
F4	4'-0" x 4'-0"	1'-3"

SEE 7/S4.1 & 8/S4.1 FOR DETAILS.

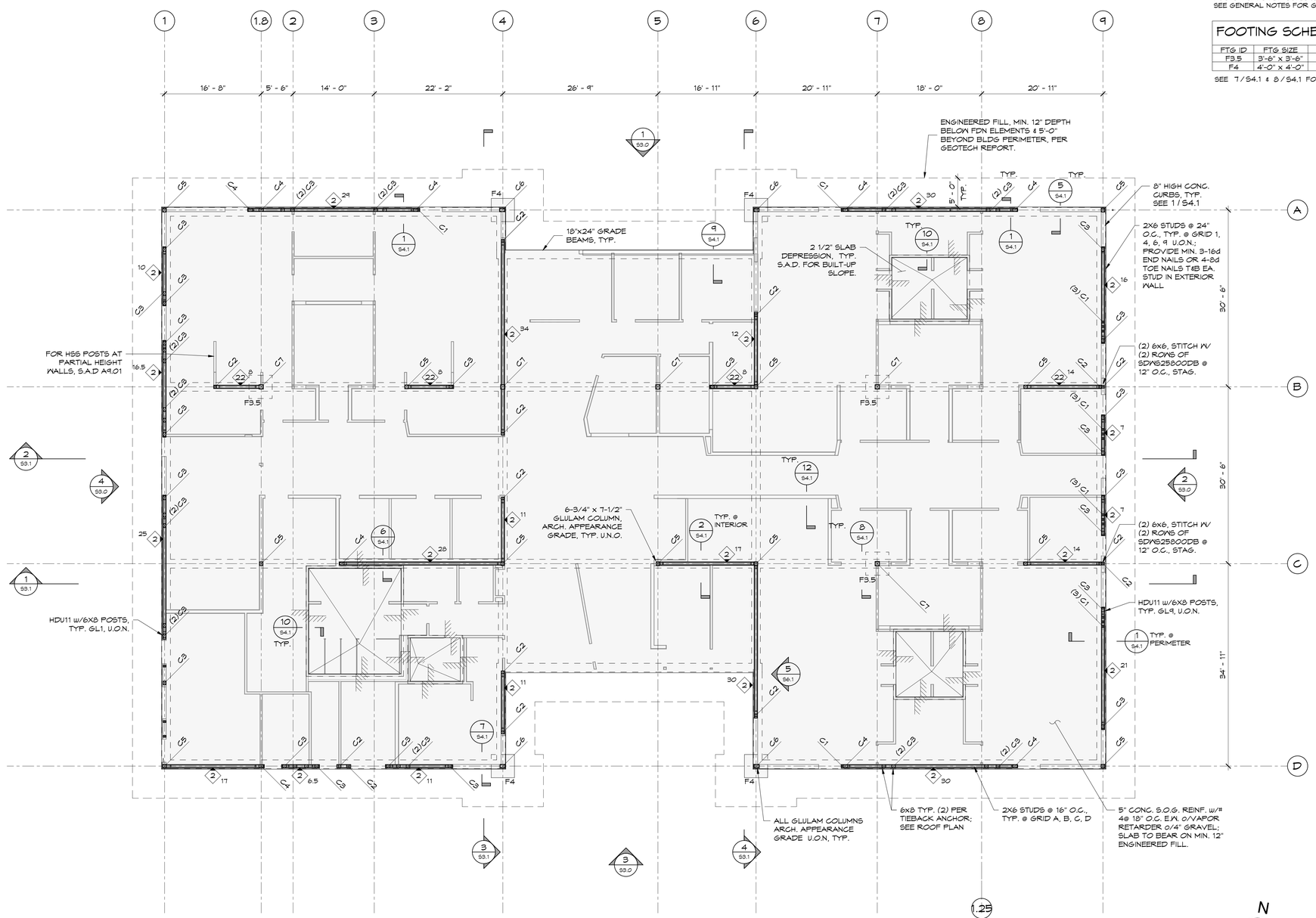

1 FOUNDATION & FIRST FLOOR PLAN
S2.0 — 1/8"=1'-0"

0 2 4 8 16

N

D:\Acad\Temp\Revit\20056-CSU Stanislaus-Struc-R2019_sarah.aher@marstructuraldesign.com.rvt

APPROVED
DIV. OF THE STATE ARCHITECT
APP: 02-119316 INC:
REVIEWED FOR
SS☐ FLS☐ ACS☑
DATE: 03/24/2022

Division of the State Architect

Office of the State Fire Marshal

OFFICE OF THE STATE FIRE MARSHAL
APPROVED FIRE AND PANIC ONLY
03/14/22
21-0498
Approval of this plan does not authorize or approve any omission or deviation from applicable regulations. Final approval is subject to field inspection. One set of approved plans shall be available on the project site at all times.

CSUS CHILD DEVELOPMENT CENTER

CALIFORNIA STATE UNIVERSITY, STANISLAUS
ONE UNIVERSITY CIRCLE
TURLOCK, CA 95382

ehdd.

PIER 1, BAY 2
THE EMBARCADERO
SAN FRANCISCO, CA 94111

INFO@EHDD.COM
+1 415-285-9193

Consultant

Mar
Structural Design
2332 Fifth Street, Suite D
Berkeley, CA 94710
510-991-1101

Stamp

Printing	Date
95% CONSTRUCTION DOCUMENTS	06.25.2021
PERMIT SET	08.16.2021
PERMIT SET - DSA V2	12.15.2021
PERMIT SET - SFM	12.21.2021

Revisions and Description	Date

Scale
As indicated

Drawn by
SCA

EHDD Job Number
2020,056

Sheet Title
FOUNDATION & 1ST FLOOR PLAN

Sheet Number
S2.0 V3

12/9/2021 11:56:11 PM

W16x31 c=3/4"

- DENOTES SHOP CAMBER AT BEAM MIDSPAN. POSITIVE CAMBERS ARE UP, NEGATIVE CAMBERS ARE DOWN
- DENOTES BEAM SIZE

PLAN LEGEND

- WOOD STUD SHEARWALL
- DF OR GLULAM COLUMN
- COLLECTOR TIE
- TIEBACK ANCHOR
- ROOF OPENING

ROOF FRAMING NOTES

1. ROOF EDGE DIMENSIONS SHALL BE COORDINATED WITH ARCHITECTURAL DRAWINGS. SEE STRUCT. NOTES AND TYPICAL DETAILS FOR ADDITIONAL INFO.
2. SEE S3.10 FOR TRUSS KEY PLAN

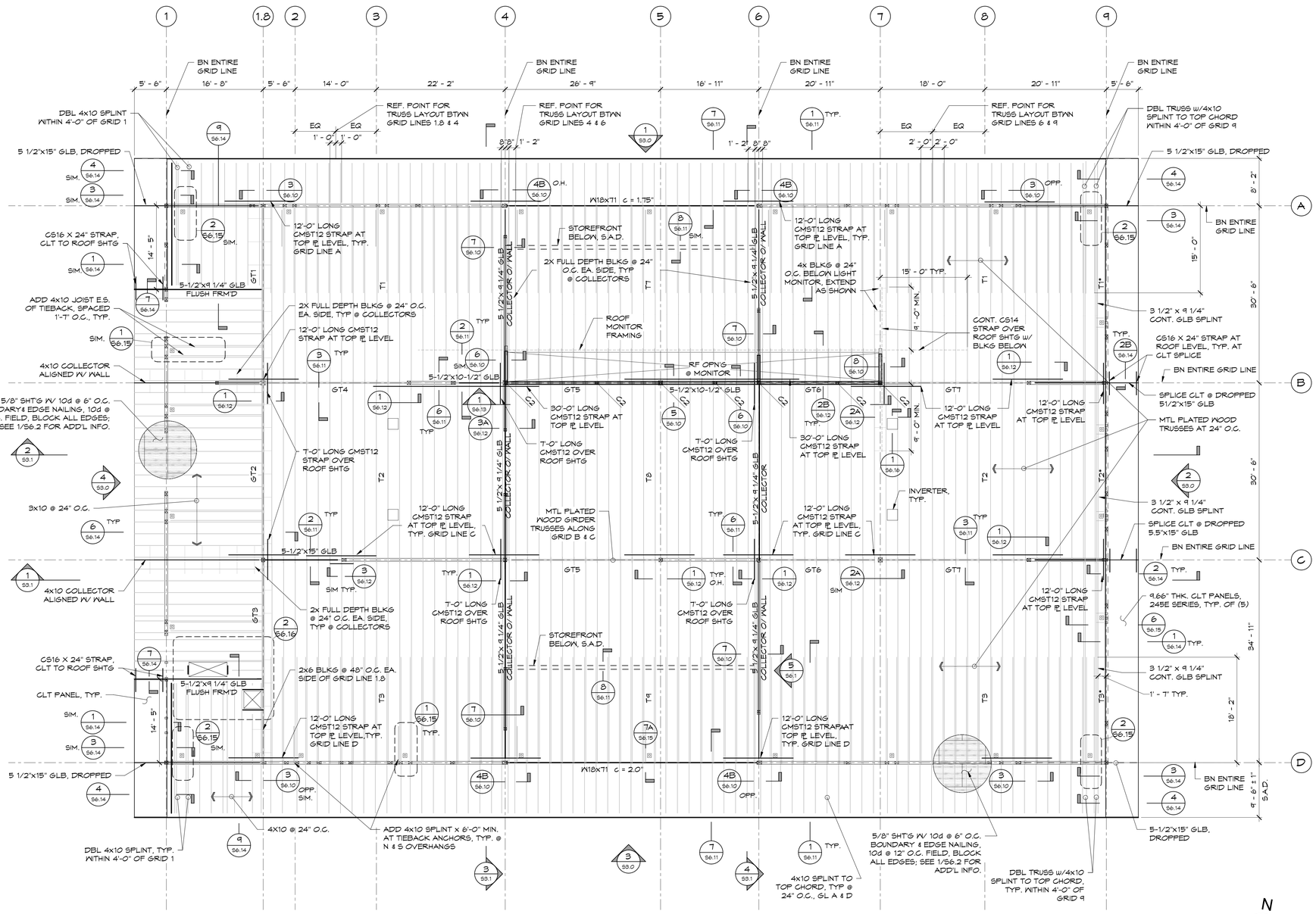

1 S2.0 ROOF FRAMING PLAN
1/8"=1'-0"
0 2 4 8 16

N

D:\AcadTemp\Revit\20056-CSU Stanislaus-Struc-R2019_sarah.aher@marstructuraldesign.com.rvt

APPROVED
DIV. OF THE STATE ARCHITECT
APP: 02-119316 INC:
REVIEWED FOR
SS☐ FLS☐ ACS☑
DATE: 03/24/2022

Division of the State Architect

Office of the State Fire Marshal

OFFICE OF THE STATE FIRE MARSHAL
APPROVED FIRE AND PANIC ONLY
03/14/22
21-0498
Approval of this plan does not authorize or approve any omission or deviation from applicable regulations. Final approval is subject to field inspection. One set of approved plans shall be available on the project site at all times.

CSUS CHILD DEVELOPMENT CENTER

CALIFORNIA STATE UNIVERSITY, STANISLAUS
ONE UNIVERSITY CIRCLE
TURLOCK, CA 95382

ehdd.

PIER 1, BAY 2
THE EMBARCADERO
SAN FRANCISCO, CA 94111

INFO@EHDD.COM
+1 415-285-9193

Consultant

Mar
Structural Design
2332 Fifth Street, Suite D
Berkeley, CA 94710
510-991-1101

Stamp

REGISTERED PROFESSIONAL ENGINEER
DAVID CLIFTON MAR
No. S3951
Exp. 3-31-22
STRUCTURAL
STATE OF CALIFORNIA

Printing	Date
95% CONSTRUCTION DOCUMENTS	06.25.2021
PERMIT SET	08.16.2021
PERMIT SET - DSA V2	12.15.2021
PERMIT SET - SFM	12.21.2021

Revisions and Description	Date

Scale
As indicated

Drawn by
SCA

EHDD Job Number
2020,056

Sheet Title
ROOF FRAMING PLAN

Sheet Number
S2.1 **V3**

12/9/2021 11:56:12 PM

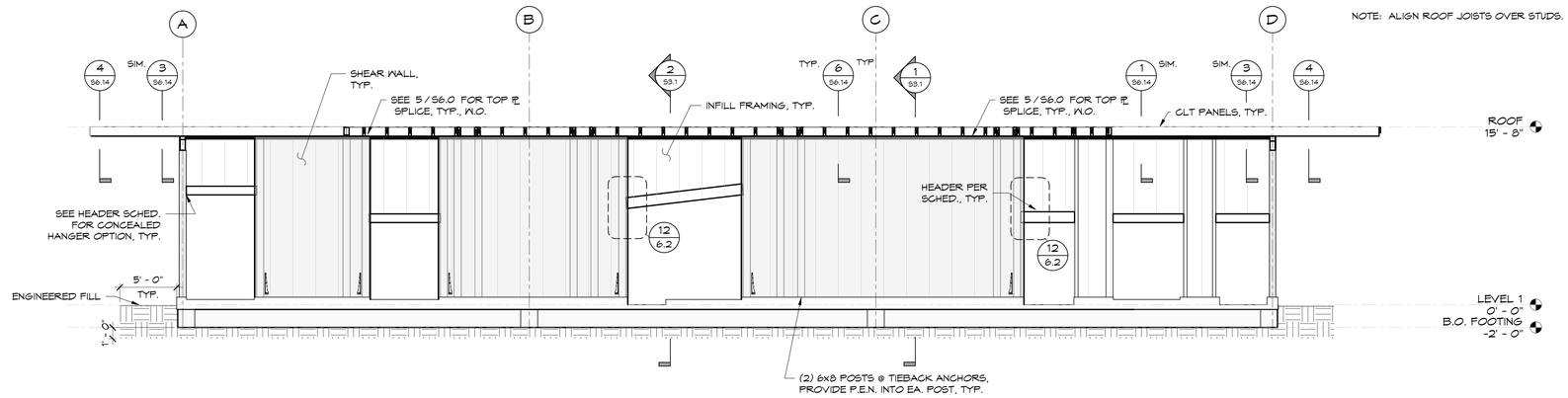

4 S3.0 WEST ELEVATION
3/16" = 1'-0"

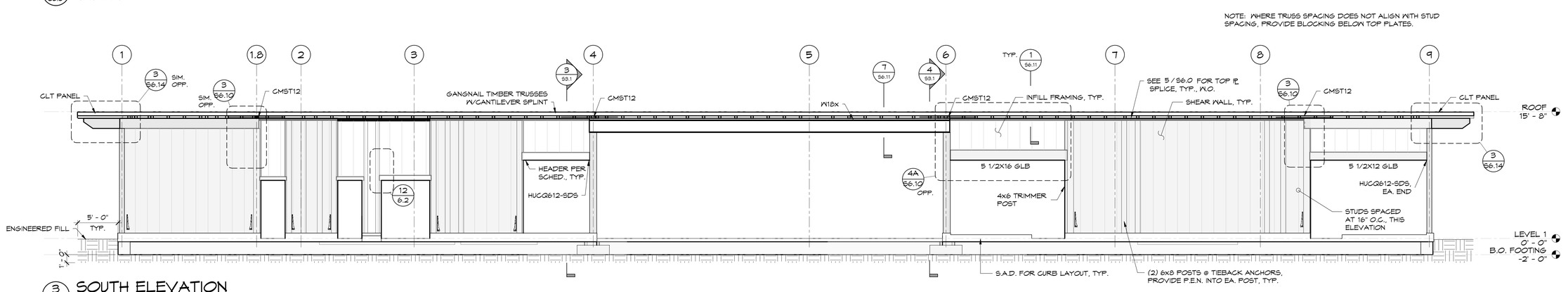

3 S3.0 SOUTH ELEVATION
3/16" = 1'-0"

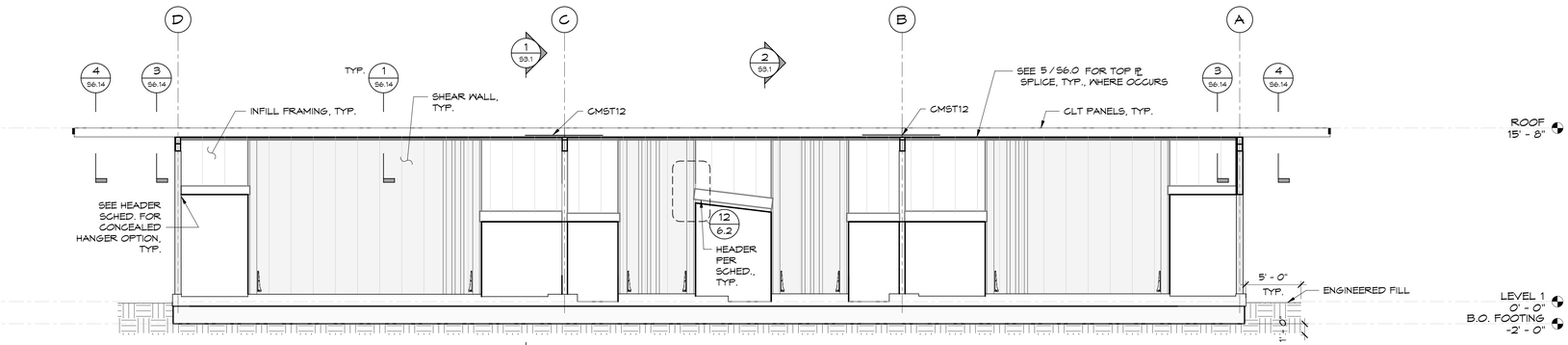

2 S3.0 EAST ELEVATION
3/16" = 1'-0"

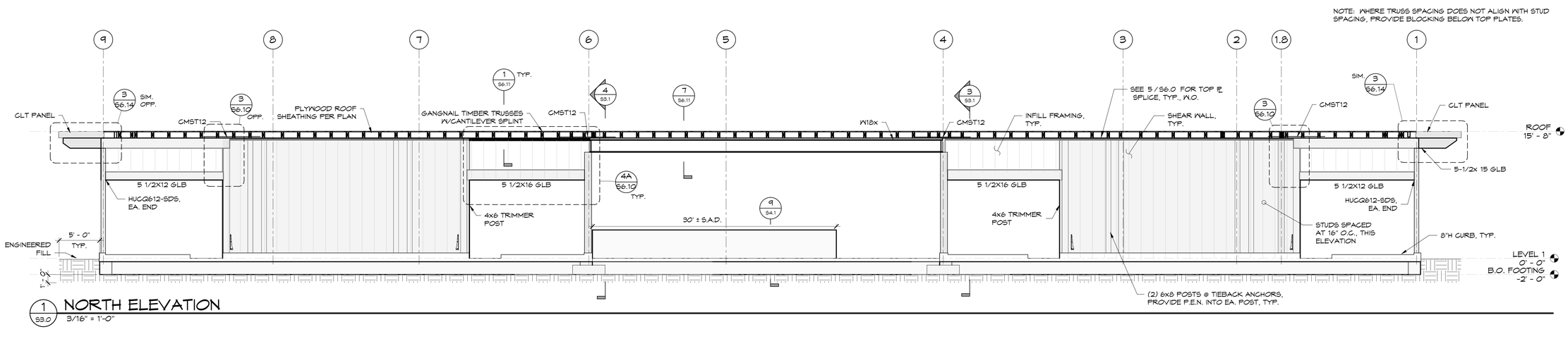

1 S3.0 NORTH ELEVATION
3/16" = 1'-0"

D:\AcadTemp\Revit\20056-CSU Stanislaus-Struc-R2019_sarah.aher@marstructuraldesign.com.rvt

Division of the State Architect

APPROVED
DIV. OF THE STATE ARCHITECT
APP: 02-119316 INC:
REVIEWED FOR
SS☐ FLS☐ ACS☒
DATE: 03/24/2022

Office of the State Fire Marshal

OFFICE OF THE STATE FIRE MARSHAL
APPROVED FIRE AND PANIC ONLY
03/14/22
21-0498
Approval of this plan does not authorize or approve any omission or deviation from applicable regulations. Final approval is subject to field inspection. One set of approved plans shall be available on the project site at all times.

CSUS CHILD DEVELOPMENT CENTER

CALIFORNIA STATE UNIVERSITY, STANISLAUS
ONE UNIVERSITY CIRCLE
TURLOCK, CA 95382

ehdd.

PIER 1, BAY 2
THE EMBARCADERO
SAN FRANCISCO, CA 94111

INFO@EHDD.COM
+1 415-285-9193

Consultant

Mar
Structural Design
2332 Fifth Street, Suite D
Berkeley, CA 94710
510-991-1101

Stamp

REGISTERED PROFESSIONAL ENGINEER
DAVID CLIFTON MAR
No. S3951
Exp. 3-31-22
STRUCTURAL
STATE OF CALIFORNIA

Printing	Date
95% CONSTRUCTION DOCUMENTS	06.25.2021
PERMIT SET	08.16.2021
PERMIT SET - DSA V2	12.15.2021
PERMIT SET - SFM	12.21.2021

Revisions and Description	Date

Scale
3/16" = 1'-0"

Drawn by
SCA

EHDD Job Number
2020,056

Sheet Title
BUILDING ELEVATIONS

Sheet Number
S3.0 **V3**

12/9/2021 11:56:13 PM

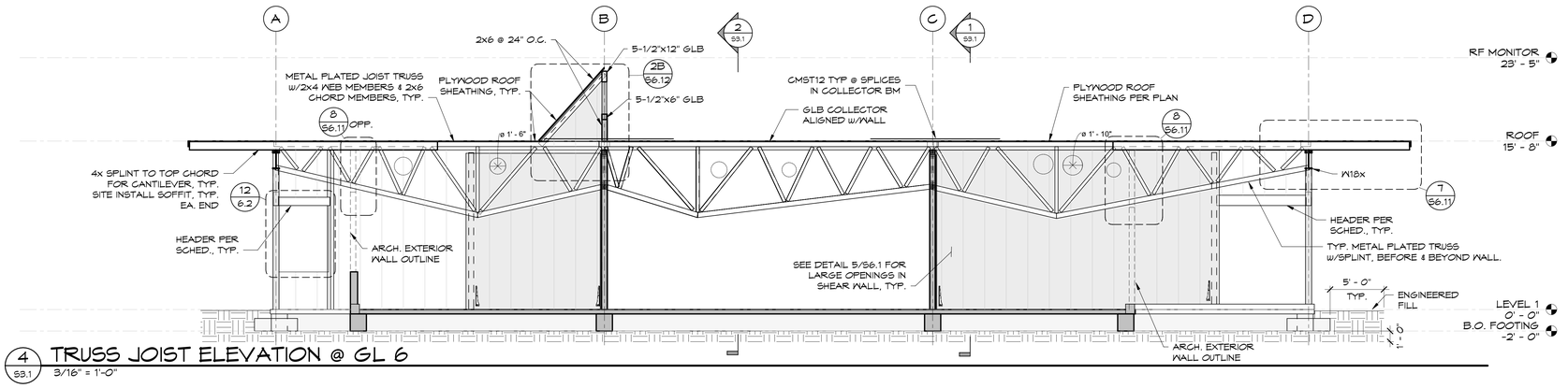

4 S3.1 **TRUSS JOIST ELEVATION @ GL 6**

3/16" = 1'-0"

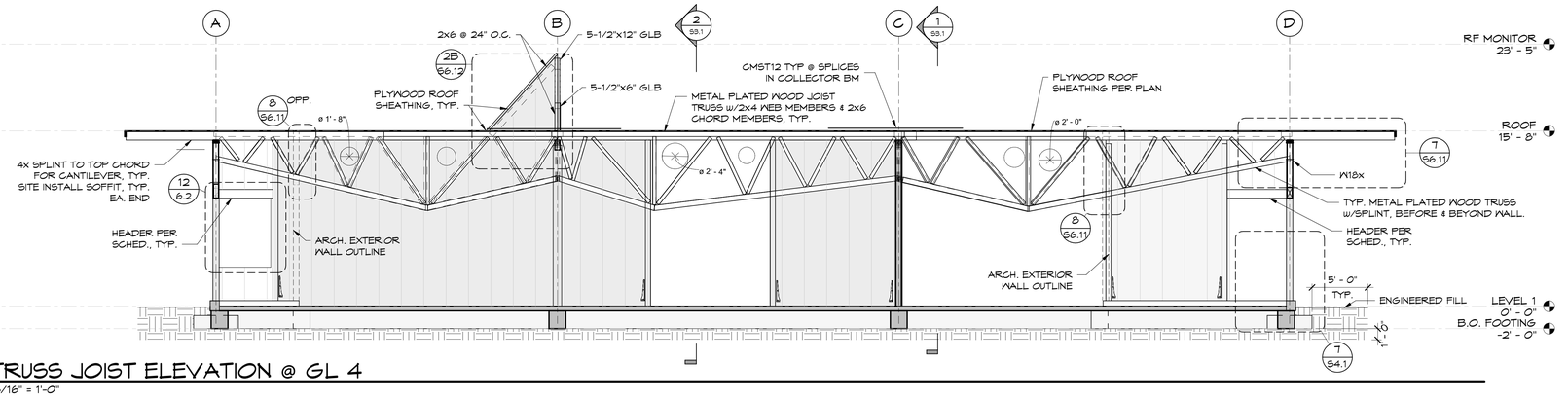

3 S3.1 **TRUSS JOIST ELEVATION @ GL 4**

3/16" = 1'-0"

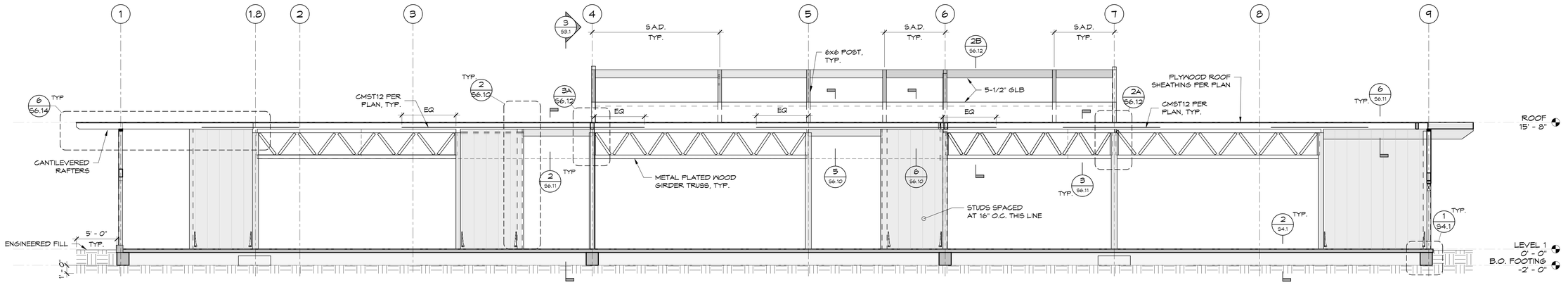

2 S3.1 **GIRDER ELEVATION @ GL B**

3/16" = 1'-0"

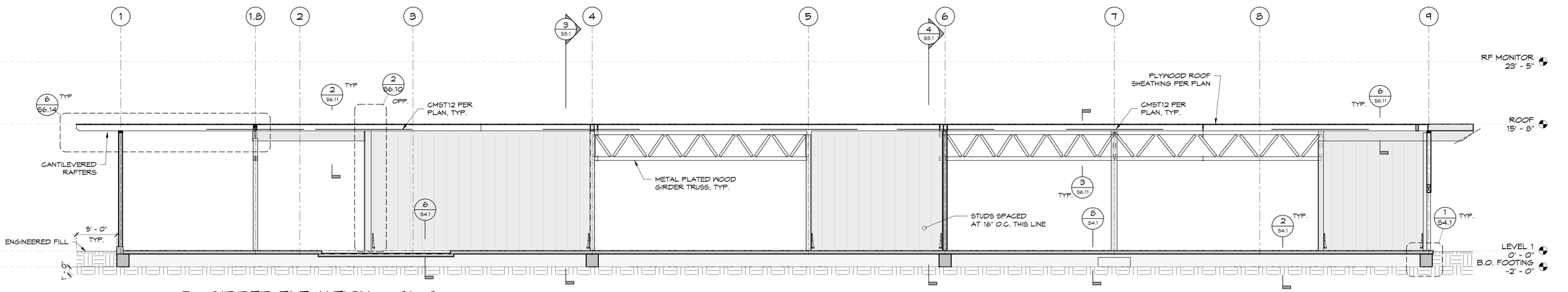

1 S3.1 **GIRDER ELEVATION @ GL C**

3/16" = 1'-0"

D:\AcadTemp\Revit\20056-CSU Stanislaus-Struc-R2019_sarah.aher@marstructuraldesign.com.rvt

Division of the State Architect

APPROVED
DIV. OF THE STATE ARCHITECT
APP: 02-119316 INC:
REVIEWED FOR
SS☐ FLS☐ ACS☑
DATE: 03/24/2022

Office of the State Fire Marshal

OFFICE OF THE STATE FIRE MARSHAL
APPROVED FIRE AND PANIC ONLY
03/14/22
21-0498
Approval of this plan does not authorize or approve any omission or deviation from applicable regulations. Final approval is subject to field inspection. One set of approved plans shall be available on the project site at all times.

CSUS CHILD DEVELOPMENT CENTER

CALIFORNIA STATE UNIVERSITY, STANISLAUS
ONE UNIVERSITY CIRCLE
TURLOCK, CA 95382

ehdd.

PIER 1, BAY 2
THE EMBARCADERO
SAN FRANCISCO, CA 94111

INFO@EHDD.COM
+1 415-285-9193

Consultant

Mar
Structural Design
2332 Fifth Street, Suite D
Berkeley, CA 94710
510-991-1101

Stamp

REGISTERED PROFESSIONAL ENGINEER
DAVID CLIFTON MAR
No. S3951
Exp. 3-31-22
STRUCTURAL
STATE OF CALIFORNIA

Printing	Date
95% CONSTRUCTION DOCUMENTS	06.25.2021
PERMIT SET	08.16.2021
PERMIT SET - DSA V2	12.15.2021
PERMIT SET - SFM	12.21.2021

Revisions and Description	Date

Scale
3/16" = 1'-0"

Drawn by
SCA

EHDD Job Number
2020,056

Sheet Title
BUILDING SECTIONS

Sheet Number
S3.1 **V3**

12/9/2021 11:56:13 PM

D:\AcadTemp\Revit\20056-CSU Stanislaus-Struc-R2019_sarah.aher@marstructuraldesign.com.rvt

PLAN LEGEND

- WOOD STUD SHEARWALL
- DF OR GLULAM COLUMN
- COLLECTOR TIE
- TIEBACK ANCHOR
- ROOF OPENING

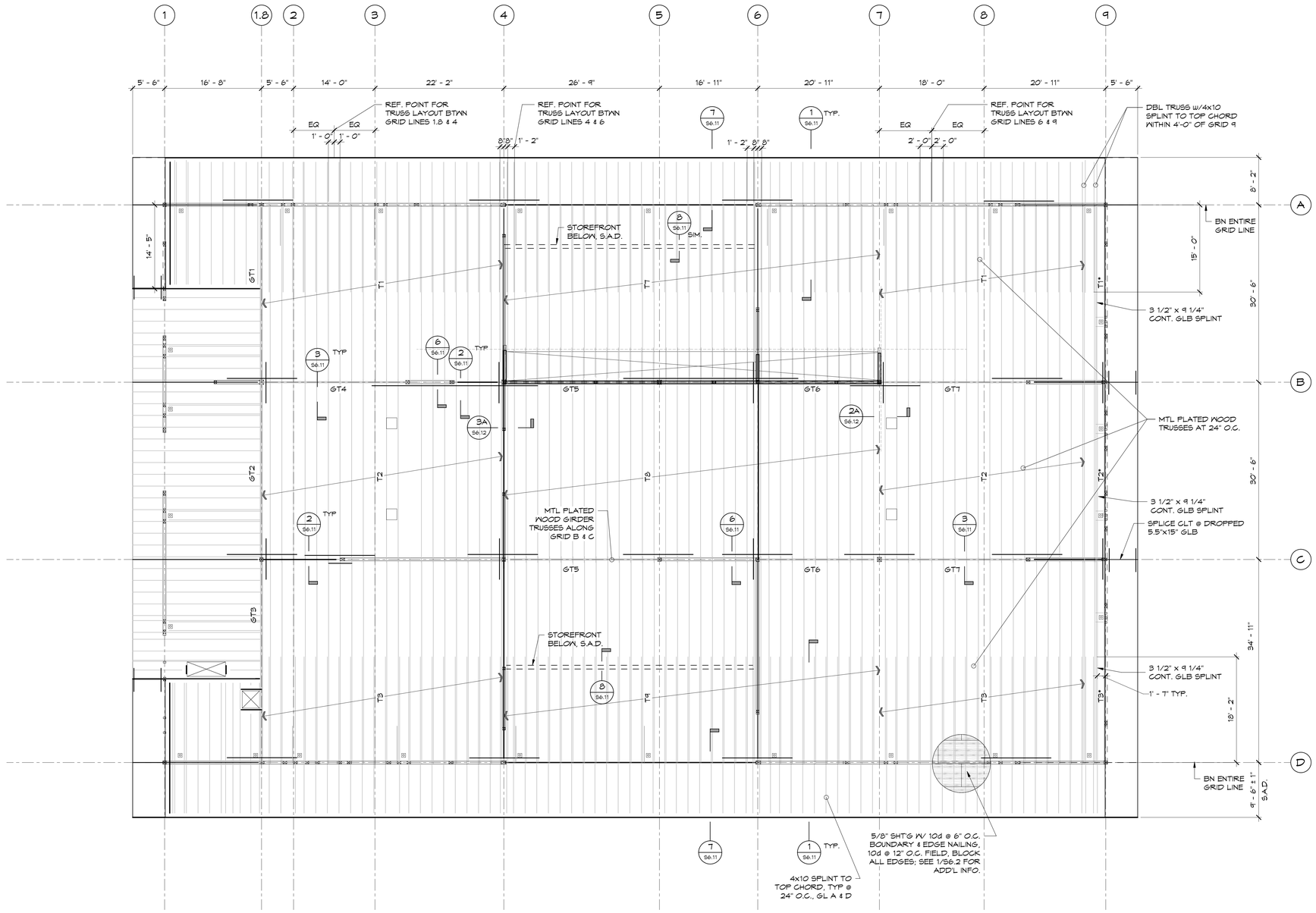

1 S3.10 TRUSS KEY PLAN

1/8" = 1'-0"

0 2 4 8 16

TRUSS KEY & LOADING SCHEDULE

TRUSS ID	SPAN(3)	DL(2)	LLr(2,4)	WL(2)	AXIAL(4)
T1	30'-6"	50plf	40plf	-64/+32plf	±1000#
T2	30'-6"	50plf	40plf	-64/+32plf	±1000#
T3	34'-11"	50plf	40plf	-64/+32plf	±1000#
T7	30'-6"	50plf	40plf	-64/+32plf	±3000#
T8	30'-6"	50plf	40plf	-64/+32plf	±3000#
T9	34'-11"	50plf	40plf	-64/+32plf	±3000#
GT1	30'-6"	240plf	190plf	-240/+155plf	±3000#
GT2	30'-6"	240plf	190plf	-240/+155plf	±3000#
GT3	34'-11"	240plf	190plf	-240/+155plf	±3000#
GT4	19'-6"	825plf	660plf	-800/+530plf	±13000#
GT5	26'-9"	825plf	660plf	-800/+530plf	±13000#
GT6	20'-11"	825plf	660plf	-800/+530plf	±13000#
GT7	18'-0"	825plf	660plf	-800/+530plf	±13000#

NOTES
(1) SEE S3.11, S3.12, S3.13 & S3.14 FOR ADDITIONAL LOADS IN TRUSS ELEVATIONS.
LOADS MARKED WITH * APPLY ONLY AT T1*, T2*, AND T3* TRUSSES NOTED ON PLAN
(2) LOADING APPLIED TO TOP CHORD.
(3) SPAN MEASURED TO CENTERLINE OF SUPPORT OR GRID LINE; VERIFY ALL DIMENSIONS WITH ARCHITECTURAL DRAWINGS.
(4) AXIAL LOADING FOR SEISMIC (EL) OR WIND FORCES (WL). (+) INDICATES COMPRESSION, (-) INDICATES TENSION.
(5) FOR WIND LOADING, (-) INDICATES UPLIFT, (+) INDICATES DOWNWARD LOAD.
(6) "T" TRUSSES SPACED AT 24" O.C., TYP. U.O.N.
(7) ALL LOADS GIVEN ARE UNFACTORED.
(8) "GT" TRUSSES ASSUMED TO BE (3) TRUSSES SCREWED TOGETHER.
(9) TRUSSES SHALL BE DESIGNED TO WITHSTAND CONCENTRATED LLr OF 300# AT ANY POINT ALONG TOP CHORD. THIS LOAD DOES NOT OCCUR SIMULTANEOUSLY W/ DISTRIBUTED LLr.
(10) TRUSS DEFLECTION CRITERIA AS FOLLOWS: L/480 FOR LLr, WL; L/240 FOR DL+LLr

Division of the State Architect

APPROVED
DIV. OF THE STATE ARCHITECT
APP: 02-119316 INC:
REVIEWED FOR
SS☐ FLS☐ ACS☒
DATE: 03/24/2022

Office of the State Fire Marshal

OFFICE OF THE STATE FIRE MARSHAL
APPROVED FIRE AND PANIC ONLY
03/14/22
21-0498
Approval of this plan does not authorize or approve any omission or deviation from applicable requirements. Final approval is subject to field inspection. One set of approved plans shall be available on the project site at all times.

CSUS CHILD DEVELOPMENT CENTER

CALIFORNIA STATE UNIVERSITY, STANISLAUS
ONE UNIVERSITY CIRCLE
TURLOCK, CA 95382

ehdd.

PIER 1, BAY 2
THE EMBARCADERO
SAN FRANCISCO, CA 94111

INFO@EHDD.COM
+1 415-285-9193

Consultant

Mar
Structural Design
2332 Fifth Street, Suite D
Berkeley, CA 94710
510-991-1101

Stamp

REGISTERED PROFESSIONAL ENGINEER
DAVID CLIFTON MAR
No. S3951
Exp. 3-31-22
CIVIL
STATE OF CALIFORNIA

Printing	Date
95% CONSTRUCTION DOCUMENTS	06.25.2021
PERMIT SET	08.16.2021
PERMIT SET - DSA V2	12.15.2021
PERMIT SET - SFM	12.21.2021

Revisions and Description	Date

Scale
As indicated

Drawn by
Author

EHDD Job Number
2020,056

Sheet Title
TRUSS KEY PLAN

Sheet Number
S3.10 V3

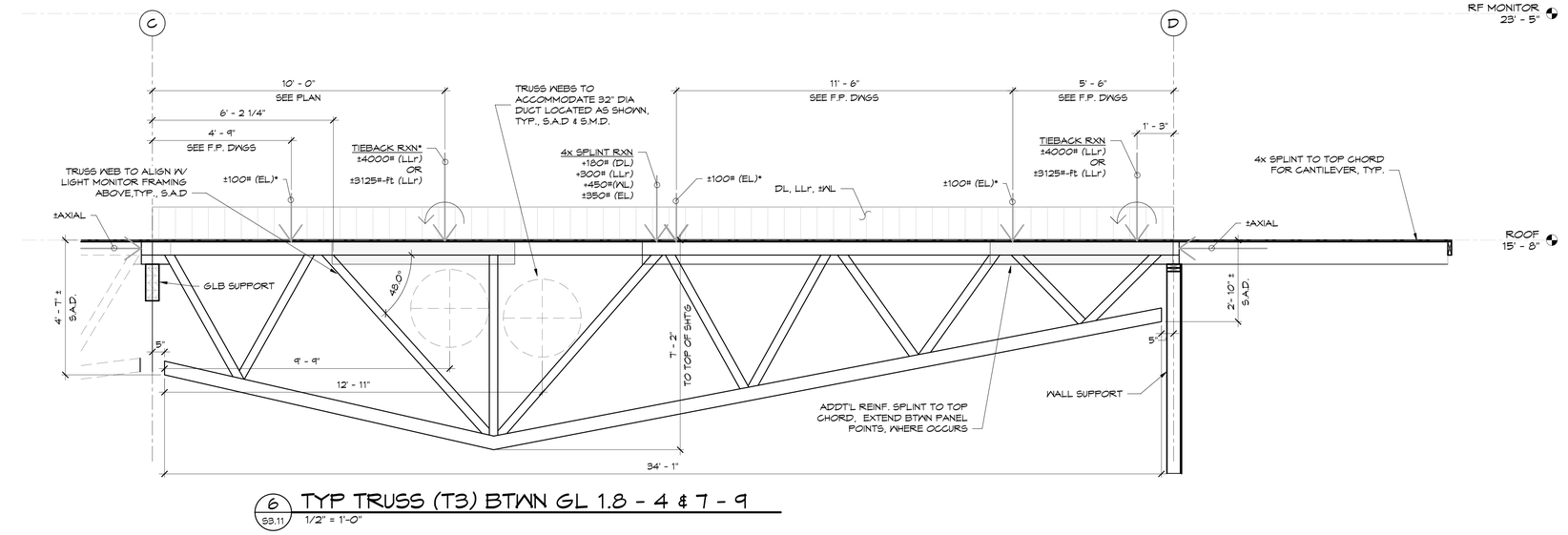

6 S3.11 TYP TRUSS (T3) BTWN GL 1.8 - 4 & 7 - 9
1/2" = 1'-0"

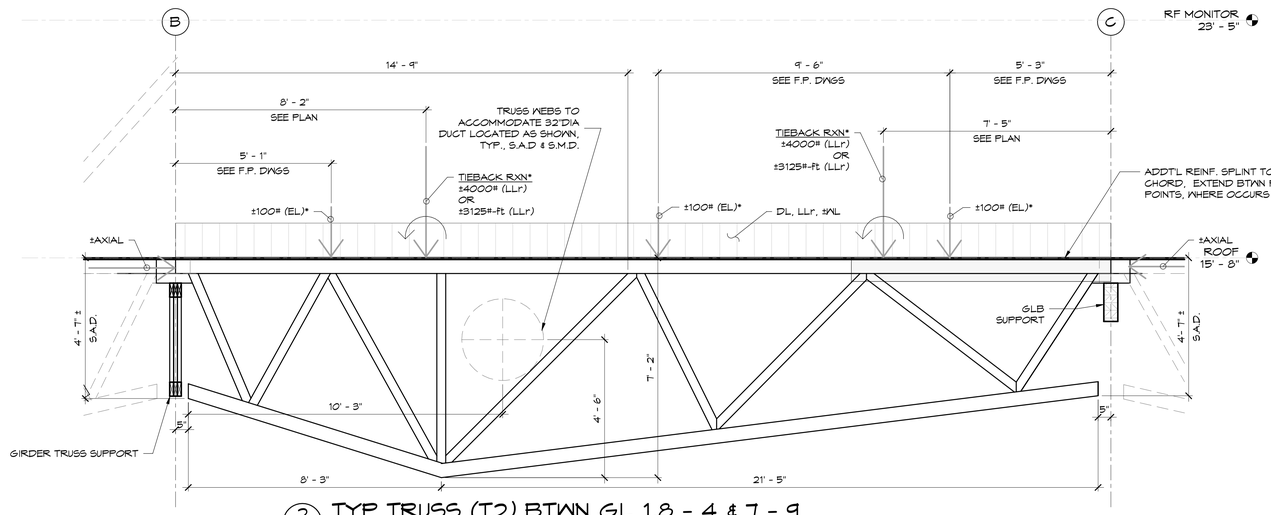

2 S3.11 TYP TRUSS (T2) BTWN GL 1.8 - 4 & 7 - 9
1/2" = 1'-0"

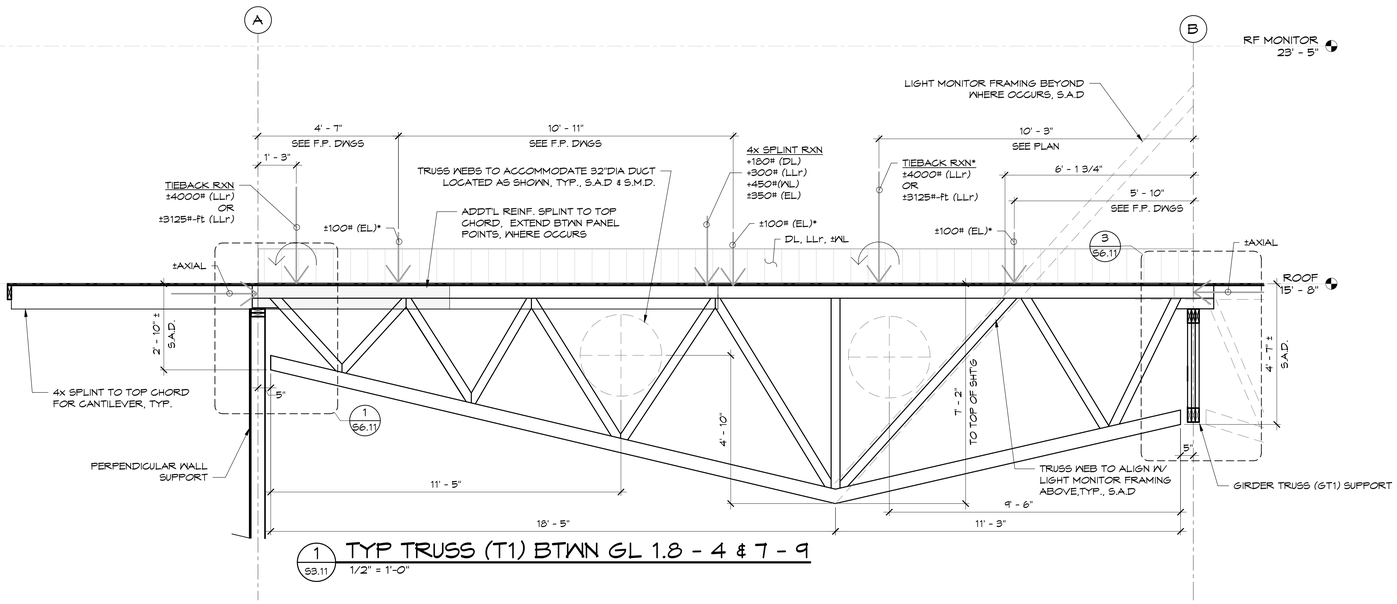

1 S3.11 TYP TRUSS (T1) BTWN GL 1.8 - 4 & 7 - 9
1/2" = 1'-0"

TRUSS KEY & LOADING SCHEDULE

TRUSS ID	SPAN(3)	DL(2)	LLr(2,4)	WL(2)	AXIAL(4)
T1	30'-6"	50plf	40plf	-64/+32plf	±1000#
T2	30'-6"	50plf	40plf	-64/+32plf	±1000#
T3	34'-11"	50plf	40plf	-64/+32plf	±1000#
T7	30'-6"	50plf	40plf	-64/+32plf	±3000#
T8	30'-6"	50plf	40plf	-64/+32plf	±3000#
T9	34'-11"	50plf	40plf	-64/+32plf	±3000#
GT1	30'-6"	240plf	190plf	-240/+155plf	±3000#
GT2	30'-6"	240plf	190plf	-240/+155plf	±3000#
GT3	34'-11"	240plf	190plf	-240/+155plf	±3000#
GT4	19'-6"	625plf	660plf	-800/+530plf	±13000#
GT5	26'-9"	625plf	660plf	-800/+530plf	±13000#
GT6	20'-11"	625plf	660plf	-800/+530plf	±13000#
GT7	18'-0"	625plf	660plf	-800/+530plf	±13000#

NOTES
(1) SEE S3.11, S3.12, S3.13 & S3.14 FOR ADDITIONAL LOADS IN TRUSS ELEVATIONS.
LOADS MARKED WITH * APPLY ONLY AT T1*, T2*, AND T3* TRUSSES NOTED ON PLAN
(2) LOADING APPLIED TO TOP CHORD.
(3) SPAN MEASURED TO CENTERLINE OF SUPPORT OR GRID LINE; VERIFY ALL DIMENSIONS WITH ARCHITECTURAL DRAWINGS.
(4) AXIAL LOADING FOR SEISMIC (EL) OR WIND FORCES (WL).
(+) INDICATES COMPRESSION, (-) INDICATES TENSION.
(5) FOR WIND LOADING, (-) INDICATES UPLIFT, (+) INDICATES DOWNWARD LOAD.
(6) "T" TRUSSES SPACED AT 24" O.C., TYP. U.O.N.
(7) ALL LOADS GIVEN ARE UNFACTORED.
(8) "GT" TRUSSES ASSUMED TO BE (3) TRUSSES SCREWED TOGETHER.
(9) TRUSSES SHALL BE DESIGNED TO WITHSTAND CONCENTRATED LLr OF 300# AT ANY POINT ALONG TOP CHORD. THIS LOAD DOES NOT OCCUR SIMULTANEOUSLY W/ DISTRIBUTED LLr.
(10) TRUSS DEFLECTION CRITERIA AS FOLLOWS: L/480 FOR LLr, WL; L/240 FOR DL+LLr

12/9/2021 11:56:14 PM

D:\AcadTemp\Revit\20056-CSU Stanislaus-Struc-R2019_sarah.aher@marstructuraldesign.com.rvt

Division of the State Architect

APPROVED
DIV. OF THE STATE ARCHITECT
APP: 02-119316 INC:
REVIEWED FOR
SS☐ FLS☐ ACS☒
DATE: 03/24/2022

Office of the State Fire Marshal

OFFICE OF THE STATE FIRE MARSHAL
APPROVED FIRE AND PANIC ONLY
03/14/22
21-0498
Approval of this plan does not authorize or approve any omission or deviation from applicable regulations. Final approval is subject to field inspection. One set of approved plans shall be available on the project site at all times.

CSUS CHILD DEVELOPMENT CENTER

CALIFORNIA STATE
UNIVERSITY, STANISLAUS
ONE UNIVERSITY CIRCLE
TURLOCK, CA 95382

ehdd.

PIER 1, BAY 2
THE EMBARCADERO
SAN FRANCISCO, CA 94111

INFO@EHDD.COM
+1 415-285-9193

Consultant

Mar
Structural Design
2332 Fifth Street, Suite D
Berkeley, CA 94710
510-991-1101

Stamp

REGISTERED PROFESSIONAL ENGINEER
DAVID CLIFTON MAR
No. S3951
Exp. 3-31-22
STRUCTURAL
STATE OF CALIFORNIA

Printing	Date
95% CONSTRUCTION DOCUMENTS	06.25.2021
PERMIT SET	08.16.2021
PERMIT SET - DSA V2	12.15.2021
PERMIT SET - SFM	12.21.2021

Revisions and Description — Date

Scale
As indicated

Drawn by
Author

EHDD Job Number
2020,056

Sheet Title
TRUSS ELEVATIONS

Sheet Number
S3.11 V3

12/9/2021 11:56:14 PM

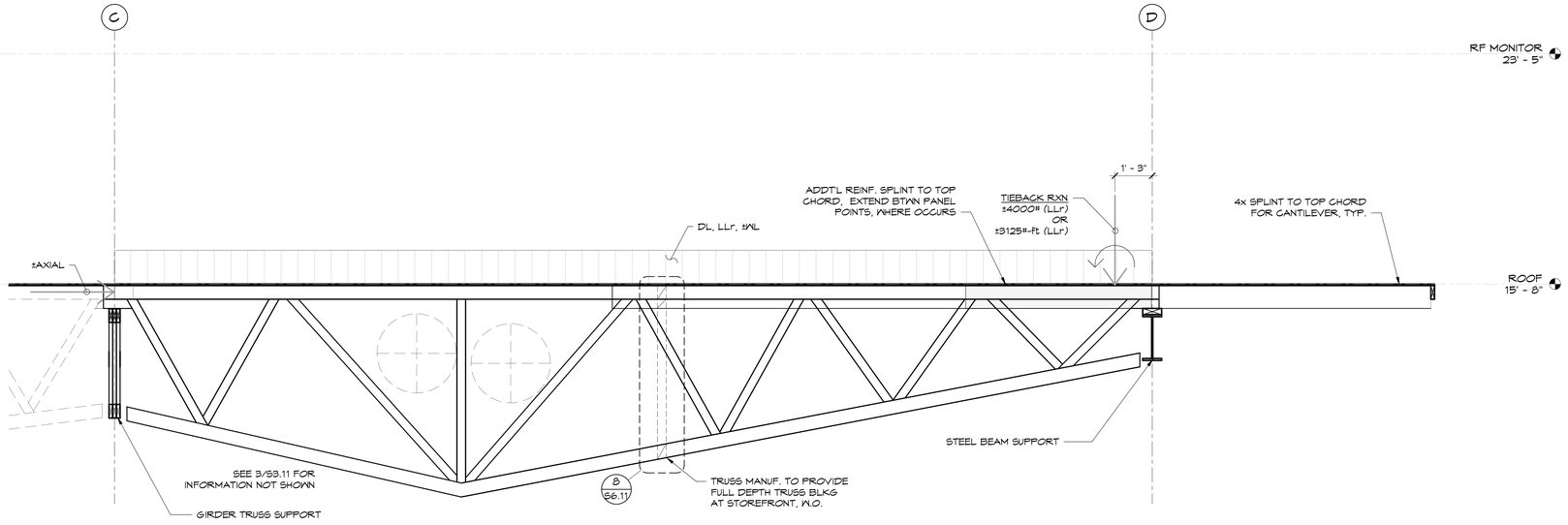

5 / S3.12 TYP TRUSS (T9) BTWN GL 4 - 7

1/2" = 1'-0"

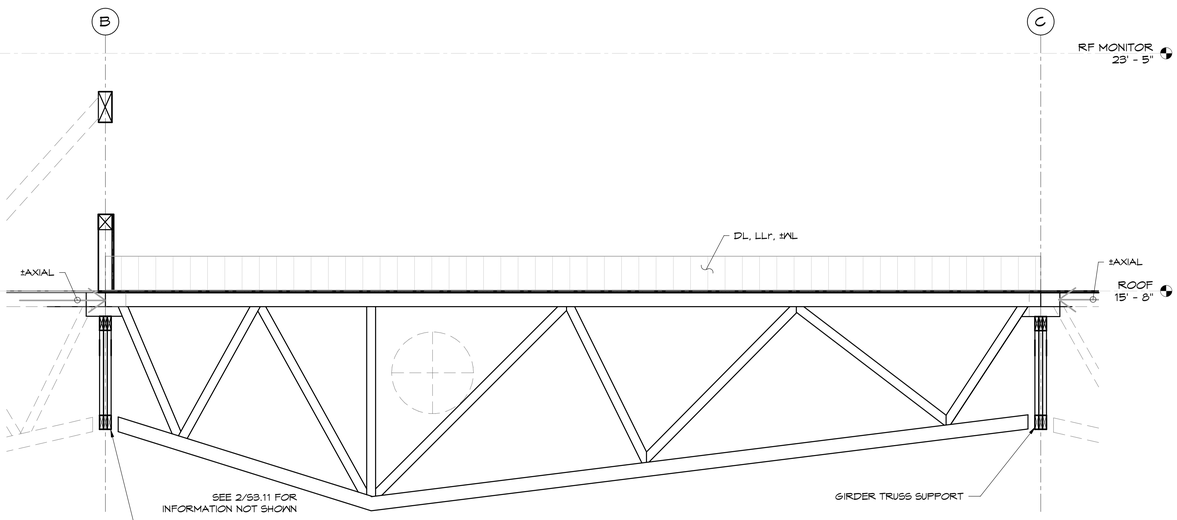

3 / S3.12 TYP TRUSS (T8) BTWN GL 4 - 7

1/2" = 1'-0"

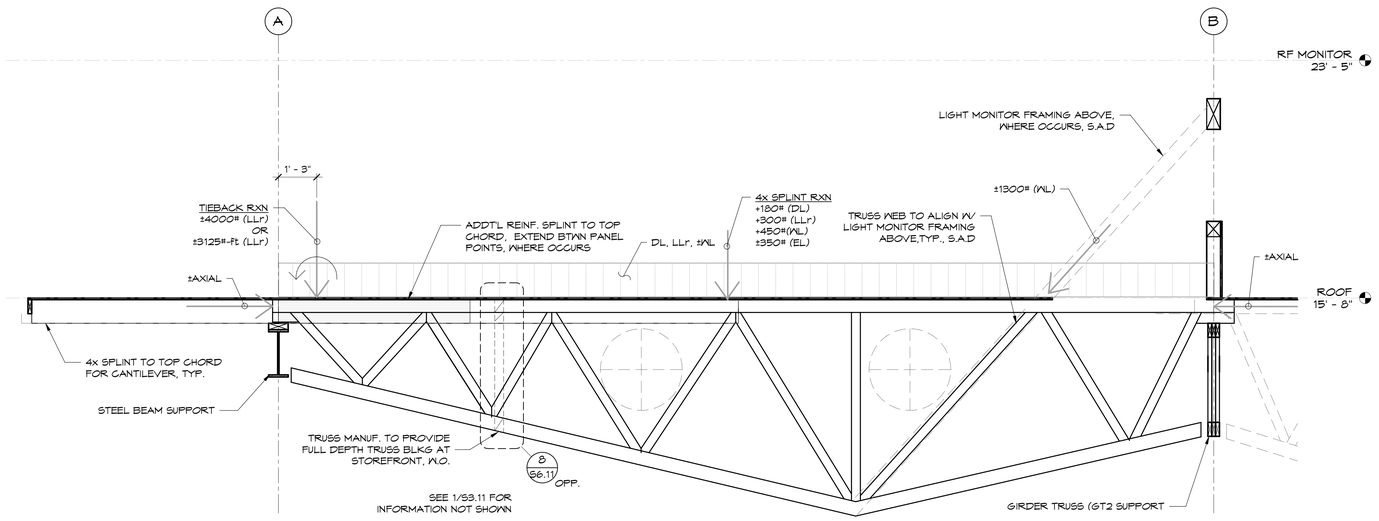

1 / S3.12 TYP TRUSS (T7) BTWN GL 4- 7

1/2" = 1'-0"

TRUSS KEY & LOADING SCHEDULE

TRUSS ID	SPAN(3)	DL(2)	LLr(2,4)	WL(2)	AXIAL(4)
T1	30'-6"	50plf	40plf	-64/+32plf	±1000#
T2	30'-6"	50plf	40plf	-64/+32plf	±1000#
T3	34'-11"	50plf	40plf	-64/+32plf	±1000#
T7	30'-6"	50plf	40plf	-64/+32plf	±3000#
T8	30'-6"	50plf	40plf	-64/+32plf	±3000#
T9	34'-11"	50plf	40plf	-64/+32plf	±3000#
GT1	30'-6"	240plf	190plf	-240/+155plf	±3000#
GT2	30'-6"	240plf	190plf	-240/+155plf	±3000#
GT3	34'-11"	240plf	190plf	-240/+155plf	±3000#
GT4	19'-6"	825plf	660plf	-800/+530plf	±13000#
GT5	26'-4"	825plf	660plf	-800/+530plf	±13000#
GT6	20'-11"	825plf	660plf	-800/+530plf	±13000#
GT7	18'-0"	825plf	660plf	-800/+530plf	±13000#

NOTES

(1) SEE S3.11, S3.12, S3.13 & S3.14 FOR ADDITIONAL LOADS IN TRUSS ELEVATIONS.
LOADS MARKED WITH * APPLY ONLY AT T1*, T2*, AND T3* TRUSSES NOTED ON PLAN
(2) LOADING APPLIED TO TOP CHORD.
(3) SPAN MEASURED TO CENTERLINE OF SUPPORT OR GRID LINE; VERIFY ALL DIMENSIONS WITH ARCHITECTURAL DRAWINGS.
(4) AXIAL LOADING FOR SEISMIC (EL) OR WIND FORCES (WL). (+) INDICATES COMPRESSION, (-) INDICATES TENSION.
(5) FOR WIND LOADING, (-) INDICATES UPLIFT, (+) INDICATES DOWNWARD LOAD.
(6) "T" TRUSSES SPACED AT 24" O.C., TYP. U.O.N.
(7) ALL LOADS GIVEN ARE UNFACTORED.
(8) "GT" TRUSSES ASSUMED TO BE (3) TRUSSES SCREWED TOGETHER.
(9) TRUSSES SHALL BE DESIGNED TO WITHSTAND CONCENTRATED LLr OF 300# AT ANY POINT ALONG TOP CHORD. THIS LOAD DOES NOT OCCUR SIMULTANEOUSLY W/ DISTRIBUTED LLr.
(10) TRUSS DEFLECTION CRITERIA AS FOLLOWS: L/480 FOR LLr, WL; L/240 FOR DL+LLr

APPROVED
DIV. OF THE STATE ARCHITECT
APP: 02-119316 INC:
REVIEWED FOR
SS☐ FLS☐ ACS☒
DATE: 03/24/2022

Division of the State Architect

Office of the State Fire Marshal

OFFICE OF THE STATE FIRE MARSHAL
APPROVED FIRE AND PANIC ONLY
03/14/22
21-0498
Approval of this plan does not authorize or approve any omission or deviation from applicable requirements. Final approval is subject to field inspection. One set of approved plans shall be available on the project site at all times.

CSUS CHILD DEVELOPMENT CENTER

CALIFORNIA STATE UNIVERSITY, STANISLAUS
ONE UNIVERSITY CIRCLE
TURLOCK, CA 95382

ehdd.

PIER 1, BAY 2
THE EMBARCADERO
SAN FRANCISCO, CA 94111

INFO@EHDD.COM
+1 415-285-9193

Consultant

Mar
Structural Design
2332 Fifth Street, Suite D
Berkeley, CA 94710
510-991-1101

Stamp

Printing	Date
95% CONSTRUCTION DOCUMENTS	06.25.2021
PERMIT SET	08.16.2021
PERMIT SET - DSA V2	12.15.2021
PERMIT SET - SFM	12.21.2021

Revisions and Description	Date

Scale
As indicated

Drawn by
Author

EHDD Job Number
2020,056

Sheet Title
TRUSS ELEVATIONS

Sheet Number
S3.12 V3

D:\AcadTemp\Revit\20056-CSU Stanislaus-Struc-R2019_sarah.aher@marstructuraldesign.com.rvt

12/9/2021 11:56:14 PM

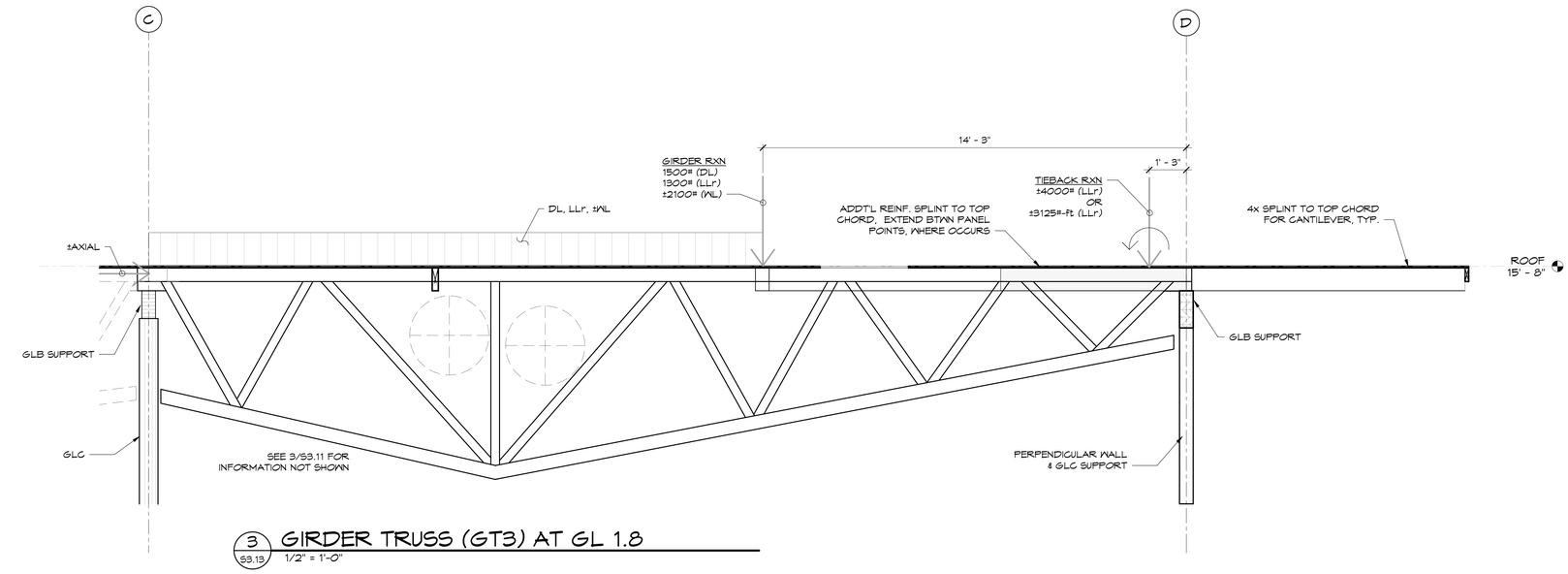

3 S3.13 GIRDER TRUSS (GT3) AT GL 1.8
1/2" = 1'-0"

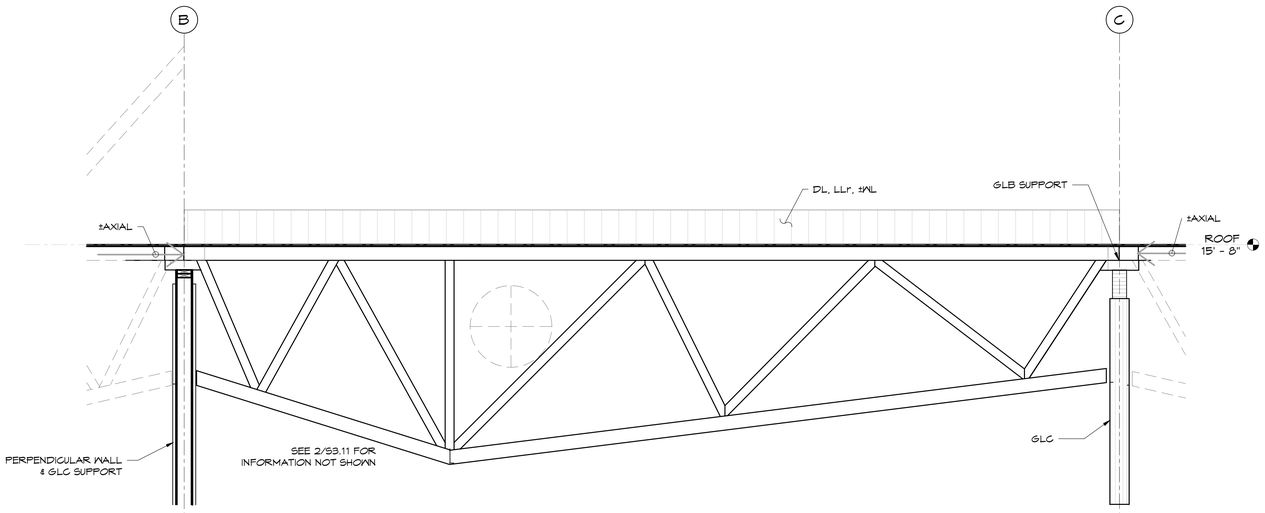

2 S3.13 GIRDER TRUSS (GT2) AT GL 1.8
1/2" = 1'-0"

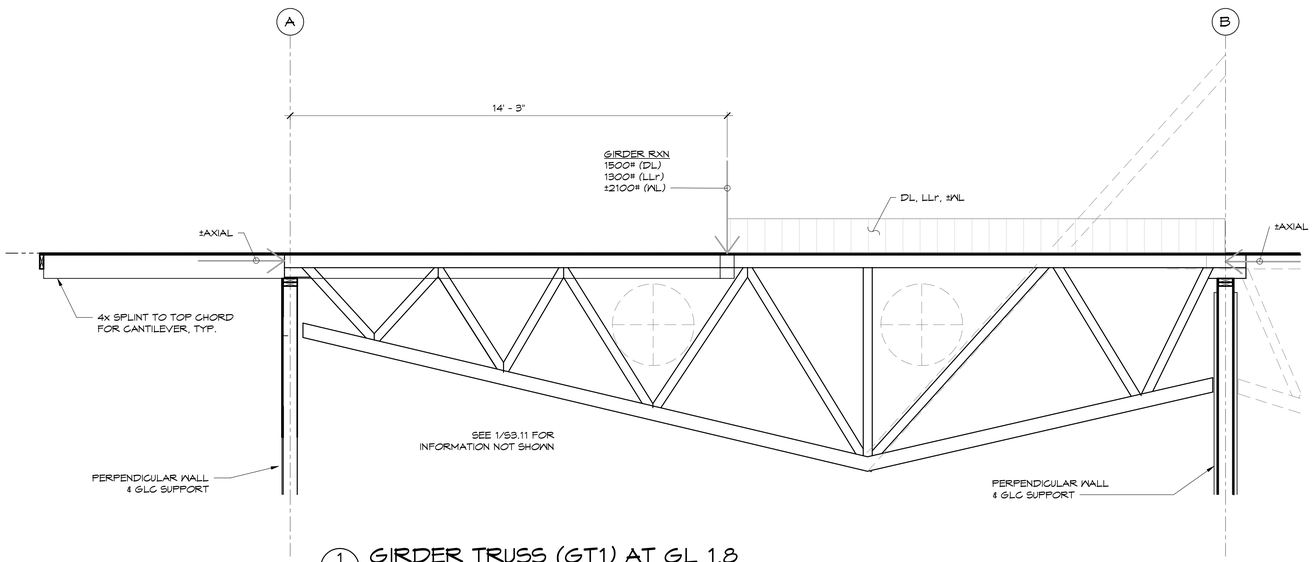

1 S3.13 GIRDER TRUSS (GT1) AT GL 1.8
1/2" = 1'-0"

TRUSS KEY & LOADING SCHEDULE

TRUSS ID	SPAN(3)	DL(2)	LLr(2,9)	WL(2)	AXIAL(4)
T1	30'-6"	50plf	40plf	-64/+32plf	±1000#
T2	30'-6"	50plf	40plf	-64/+32plf	±1000#
T3	34'-11"	50plf	40plf	-64/+32plf	±1000#
T7	30'-6"	50plf	40plf	-64/+32plf	±3000#
T8	30'-6"	50plf	40plf	-64/+32plf	±3000#
T9	34'-11"	50plf	40plf	-64/+32plf	±3000#
GT1	30'-6"	240plf	190plf	-240/+155plf	±3000#
GT2	30'-6"	240plf	190plf	-240/+155plf	±3000#
GT3	34'-11"	240plf	190plf	-240/+155plf	±3000#
GT4	19'-6"	825plf	660plf	-800/+530plf	±13000#
GT5	26'-9"	825plf	660plf	-800/+530plf	±13000#
GT6	20'-11"	825plf	660plf	-800/+530plf	±13000#
GT7	18'-0"	825plf	660plf	-800/+530plf	±13000#

NOTES
(1) SEE S3.11, S3.12, S3.13 & S3.14 FOR ADDITIONAL LOADS IN TRUSS ELEVATIONS.
LOADS MARKED WITH * APPLY ONLY AT T1*, T2*, AND T3* TRUSSES NOTED ON PLAN
(2) LOADING APPLIED TO TOP CHORD.
(3) SPAN MEASURED TO CENTERLINE OF SUPPORT OR GRID LINE; VERIFY ALL DIMENSIONS WITH ARCHITECTURAL DRAWINGS.
(4) AXIAL LOADING FOR SEISMIC (EL) OR WIND FORCES (WL). (+) INDICATES COMPRESSION, (-) INDICATES TENSION.
(5) FOR WIND LOADING, (-) INDICATES UPLIFT, (+) INDICATES DOWNWARD LOAD.
(6) "T" TRUSSES SPACED AT 24" O.C., TYP. U.O.N.
(7) ALL LOADS GIVEN ARE UNFACTORED.
(8) "ST" TRUSSES ASSUMED TO BE (3) TRUSSES SCREWED TOGETHER.
(9) TRUSSES SHALL BE DESIGNED TO WITHSTAND CONCENTRATED LLr OF 300# AT ANY POINT ALONG TOP CHORD. THIS LOAD DOES NOT OCCUR SIMULTANEOUSLY W/ DISTRIBUTED LLr.
(10) TRUSS DEFLECTION CRITERIA AS FOLLOWS: L/480 FOR LLr, WL; L/240 FOR DL+LLr

Division of the State Architect

APPROVED
DIV. OF THE STATE ARCHITECT
APP: 02-119316 INC:
REVIEWED FOR
SS☐ FLS☐ ACS☑
DATE: 03/24/2022

Office of the State Fire Marshal

OFFICE OF THE STATE FIRE MARSHAL
APPROVED FIRE AND PANIC ONLY
03/14/22
21-0498
Approval of this plan does not authorize or approve any omission or deviation from applicable regulations. Final approval is subject to field inspection. One set of approved plans shall be available on the project site at all times.

CSUS CHILD DEVELOPMENT CENTER

CALIFORNIA STATE UNIVERSITY, STANISLAUS
ONE UNIVERSITY CIRCLE
TURLOCK, CA 95382

ehdd.

PIER 1, BAY 2
THE EMBARCADERO
SAN FRANCISCO, CA 94111

INFO@EHDD.COM
+1 415-285-9193

Consultant

Mar
Structural Design
2332 Fifth Street, Suite D
Berkeley, CA 94710
510-991-1101

Stamp

REGISTERED PROFESSIONAL ENGINEER
DAVID CLIFTON MAR
No. S3951
Exp. 3-31-22
CIVIL
STATE OF CALIFORNIA

Printing	Date
95% CONSTRUCTION DOCUMENTS	06.25.2021
PERMIT SET	08.16.2021
PERMIT SET - DSA V2	12.15.2021
PERMIT SET - SFM	12.21.2021

Revisions and Description — Date

Scale
As indicated

Drawn by
Author

EHDD Job Number
2020.056

Sheet Title
TRUSS ELEVATIONS

Sheet Number
S3.13 V3

D:\AcadTemp\Revit\20056-CSU Stanislaus-Struc-R2019_sarah.aher@marstructuraldesign.com.rvt

12/9/2021 11:56:15 PM

TRUSS KEY & LOADING SCHEDULE

TRUSS ID	SPAN(3)	DL(2)	LLr(2,9)	WL(2)	AXIAL(4)
T1	30'-6"	50plf	40plf	-64/+32plf	±1000#
T2	30'-6"	50plf	40plf	-64/+32plf	±1000#
T3	34'-11"	50plf	40plf	-64/+32plf	±1000#
T7	30'-6"	50plf	40plf	-64/+32plf	±3000#
T8	30'-6"	50plf	40plf	-64/+32plf	±3000#
T9	34'-11"	50plf	40plf	-64/+32plf	±3000#
GT1	30'-6"	240plf	190plf	-240/+155plf	±3000#
GT2	30'-6"	240plf	190plf	-240/+155plf	±3000#
GT3	34'-11"	240plf	190plf	-240/+155plf	±3000#
GT4	19'-6"	825plf	660plf	-800/+530plf	±13000#
GT5	26'-8"	825plf	660plf	-800/+530plf	±13000#
GT6	20'-11"	825plf	660plf	-800/+530plf	±13000#
GT7	18'-0"	825plf	660plf	-800/+530plf	±13000#

NOTES
(1) SEE S3.11, S3.12, S3.13 & S3.14 FOR ADDITIONAL LOADS IN TRUSS ELEVATIONS.
LOADS MARKED WITH * APPLY ONLY AT T1*, T2*, AND T3* TRUSSES NOTED ON PLAN
(2) LOADING APPLIED TO TOP CHORD.
(3) SPAN MEASURED TO CENTERLINE OF SUPPORT OR GRID LINE; VERIFY ALL DIMENSIONS WITH ARCHITECTURAL DRAWINGS.
(4) AXIAL LOADING FOR SEISMIC (EL) OR WIND FORCES (WL). (+) INDICATES COMPRESSION, (-) INDICATES TENSION.
(5) FOR WIND LOADING, (-) INDICATES UPLIFT, (+) INDICATES DOWNWARD LOAD.
(6) 'T' TRUSSES SPACED AT 24" O.C., TYP. U.O.N.
(7) ALL LOADS GIVEN ARE UNFACTORED.
(8) "GT" TRUSSES ASSUMED TO BE (3) TRUSSES SCREWED TOGETHER.
(9) TRUSSES SHALL BE DESIGNED TO WITHSTAND CONCENTRATED LLr OF 300# AT ANY POINT ALONG TOP CHORD. THIS LOAD DOES NOT OCCUR SIMULTANEOUSLY W/ DISTRIBUTED LLr.
(10) TRUSS DEFLECTION CRITERIA AS FOLLOWS: L/480 FOR LLr, WL; L/240 FOR DL+LLr

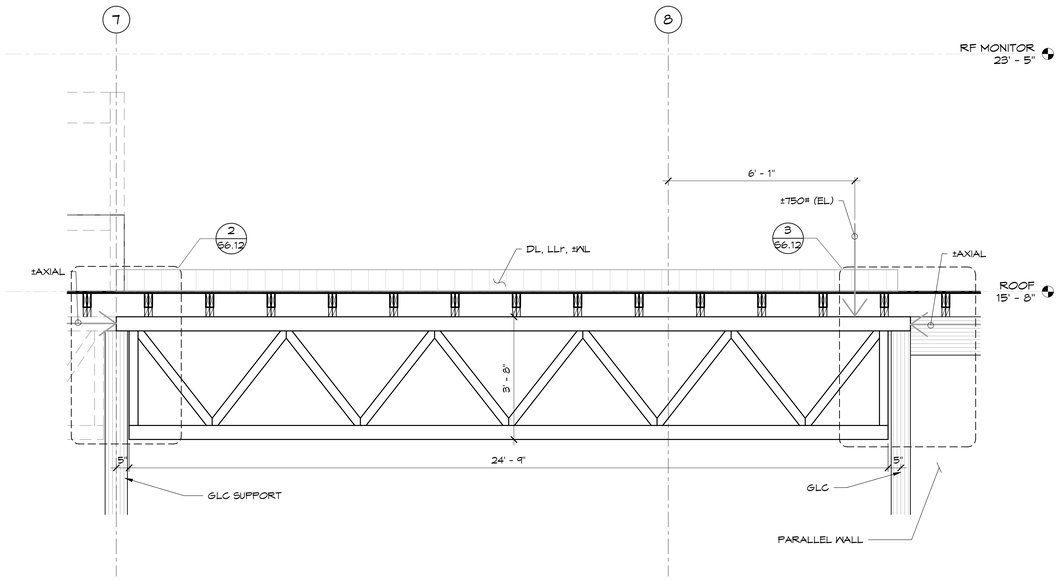

4 S3.14 GIRDER TRUSS (GT7) AT GRID LINE B & C
1/2" = 1'-0"

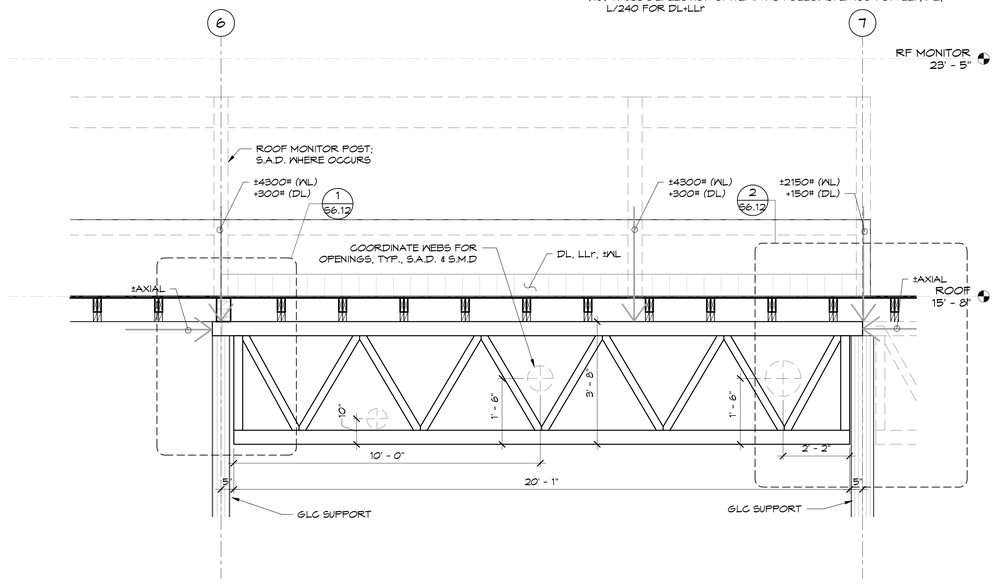

3 S3.14 GIRDER TRUSS (GT6) AT GRID LINE B & C
1/2" = 1'-0"

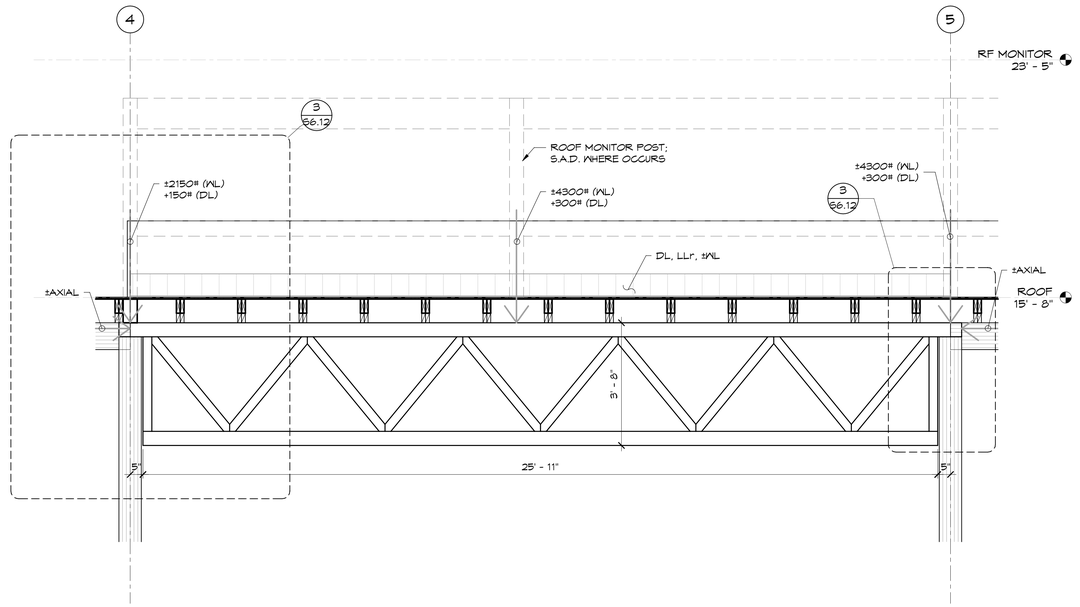

2 S3.14 GIRDER TRUSS (GT5) AT GRID LINE B & C
1/2" = 1'-0"

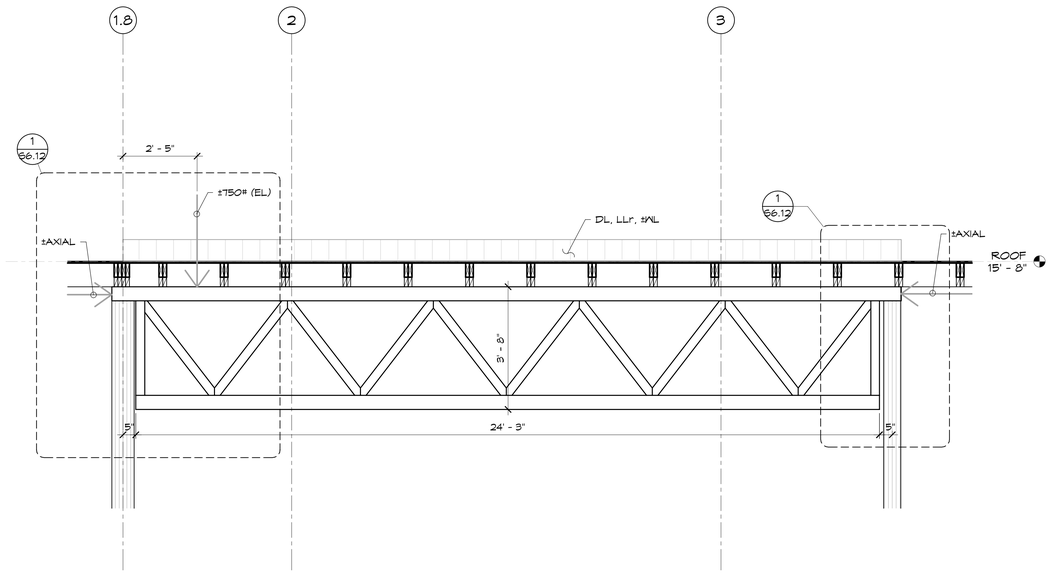

1 S3.14 GIRDER TRUSS (GT4) AT GRID LINE B
1/2" = 1'-0"

D:\AcadTemp\Revit\20056-CSU Stanislaus-Struc-R2019_sarah.aher@marstructuraldesign.com.rvt

Division of the State Architect

APPROVED
DIV. OF THE STATE ARCHITECT
APP: 02-119316 INC:
REVIEWED FOR
SS☐ FLS☐ ACS☒
DATE: 03/24/2022

Office of the State Fire Marshal

OFFICE OF THE STATE FIRE MARSHAL
APPROVED FIRE AND PANIC ONLY
03/14/22
21-0498
Approval of this plan does not authorize or approve any omission or deviation from applicable regulations. Final approval is subject to field inspection. One set of approved plans shall be available on the project site at all times.

CSUS CHILD DEVELOPMENT CENTER

CALIFORNIA STATE
UNIVERSITY, STANISLAUS
ONE UNIVERSITY CIRCLE
TURLOCK, CA 95382

ehdd.

PIER 1, BAY 2
THE EMBARCADERO
SAN FRANCISCO, CA 94111

INFO@EHDD.COM
+1 415-285-9193

Consultant

Mar
Structural Design
2332 Fifth Street, Suite D
Berkeley, CA 94710
510-991-1101

Stamp

REGISTERED PROFESSIONAL ENGINEER
DAVID CLIFTON MAR
No. S3951
Exp. 3-31-22
STRUCTURAL
STATE OF CALIFORNIA

Printing	Date
95% CONSTRUCTION DOCUMENTS	06.25.2021
PERMIT SET	08.16.2021
PERMIT SET - DSA V2	12.15.2021
PERMIT SET - SFM	12.21.2021

Revisions and Description	Date

Scale
As indicated

Drawn by
Author

EHDD Job Number
2020,056

Sheet Title
TRUSS ELEVATIONS

Sheet Number
S3.14 V3

12/9/2021 11:56:16 PM

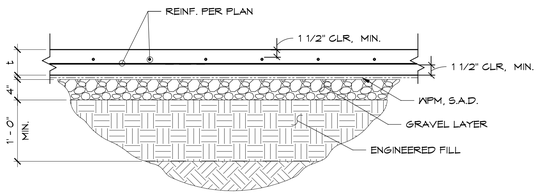

13 TYP. CONCRETE SLAB-ON-GRADE
54.0 — 1" = 1'-0"

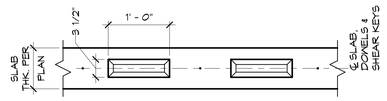

D SECTION

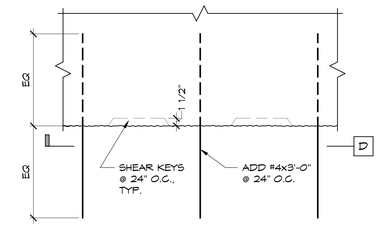

C CONSTRUCTION JOINT PLAN

NOTES:
1. TYPICAL SLAB REINFORCEMENT NOT SHOWN FOR CLARITY, REFER TO PLAN, SLAB REINFORCEMENT SHALL BE CONTINUOUS ACROSS JOINTS.
2. BEFORE PLACING SECOND POUR, ROUGHEN SURFACE AND CLEAR JOINT OF LOOSE MATERIAL.
3. ALL CONSTRUCTION JOINT LOCATIONS REQUIRE PRIOR APPROVAL BY STRUCTURAL ENGINEER

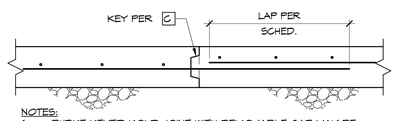

NOTES:
1. BURKE KEYED KOLD JOINT WITH REMOVABLE CAP MAY BE SUBSTITUTED FOR FORMED KEY.
2. POUR ADJACENT SLABS AT LEAST 8 HOURS APART.
3. EXPANDED METAL LATH EDGE FORM MAY BE PERMITTED BY STRUCTURAL ENGINEER DEPENDING ON SLAB DESIGN & CONTRACTOR'S PROPOSED JOINT LOCATION.

B CONSTRUCTION JOINT

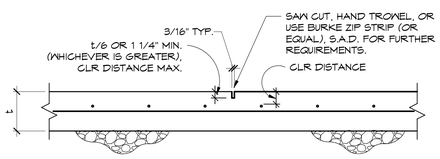

NOTE: SAW CUT TO BE MADE WITHIN 12 HOURS OF PLACEMENT.

A CONTROL JOINT

12 TYP. JOINTS IN CONCRETE SLAB-ON-GRADE
54.0 — 1" = 1'-0"

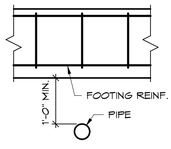

D BELOW BOTTOM BAR

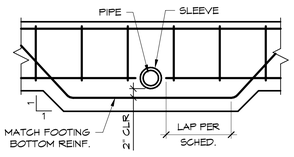

C REINF. @ BOTTOM BAR

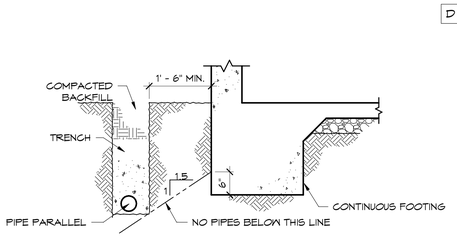

E TYP. PIPE & TRENCH, PARALLEL TO FOOTING

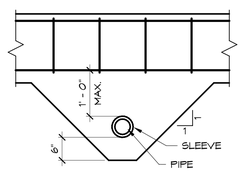

B CLOSE TO BOTTOM BAR

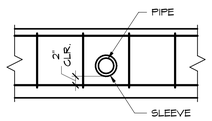

A CLEAR OF TOP & BOTTOM BAR

8 PIPES PENETRATING & ADJACENT TO GRADE BEAMS & FOOTINGS
54.0 — 3/4" = 1'-0"

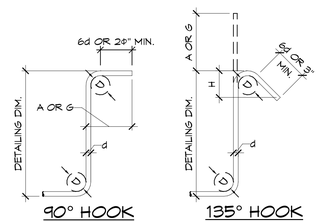

BAR SIZE	D	90° HOOK	135° HOOK	
		A or G	A or G	H (APPROX.)
#3	1 1/2"	4"	4 1/4"	3"
#4	2"	4 1/2"	4 1/2"	3"
#5	2 1/2"	6"	5-1/2"	3 1/2"
#6	4 1/2"	12"	8"	4 1/2"

NOTES:
1. 135° COLUMN TIE HOOKS MAY NOT BE BENT TO LESS THAN THE DIAMETER OF THE COLUMN VERTICAL BAR ENCLOSED IN THE HOOK.
2. INSIDE DIAMETER OF BEND IN WELDED WIRE FABRIC SHALL NOT BE LESS THAN 4d FOR DEFORMED WIRE LARGER THAN D6 AND 2d FOR ALL OTHER WIRES. BENDS SHALL NOT BE LESS THAN 4d FROM NEAREST WELDED INTERSECTION.

4 STIRRUPS & TIE STANDARD HOOKS
54.0 — 1 1/2" = 1'-0"

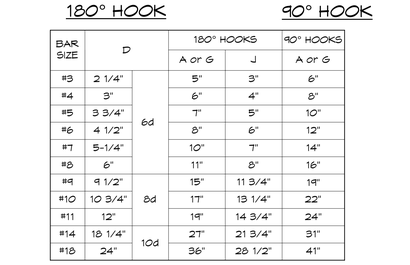

BAR SIZE	D	180° HOOKS		90° HOOKS
		A or G	J	A or G
#3	2 1/4"	5"	3"	6"
#4	3"	6"	4"	8"
#5	3 3/4"	6d	7"	5"	10"
#6	4 1/2"	8"	6"	12"
#7	5-1/4"	10"	7"	14"
#8	6"	11"	8"	16"
#9	9 1/2"	15"	11 3/4"	19"
#10	10 3/4"	8d	17"	13 1/4"	22"
#11	12"	19"	14 3/4"	24"
#14	18 1/4"	27"	21 3/4"	31"
#18	24"	10d	36"	28 1/2"	41"

3 STANDARD HOOKS
54.0 — 1 1/2" = 1'-0"

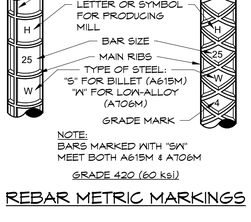

NOTE: BARS MARKED WITH "SW" MEET BOTH A615M & A706M

REBAR METRIC MARKINGS

REBAR SIZES	
POUND-INCH UNITS USED IN THESE DRAWINGS	METRIC EQUIVALENTS (mm)
#3	#10
#4	#13
#5	#16
#6	#19
#7	#22
#8	#25
#9	#29
#10	#32
#11	#36
#14	#43
#18	#57

REBAR TYPE AND GRADE	
POUND-INCH UNITS USED IN THESE DRAWINGS	METRIC EQUIVALENTS (MPa)
A615, GRADE 60 (ksi)	A615M, GRADE 420 (MPa)
A706 (Fy = 60 ksi)	A615M, GRADE 520 (MPa)
A615, GRADE 75 (ksi)	A706M (Fy = 420 MPa)

REBAR METRIC EQUIVALENTS

6 REBAR METRIC MARKINGS & EQUIVALENTS
54.0 — 3/4" = 1'-0"

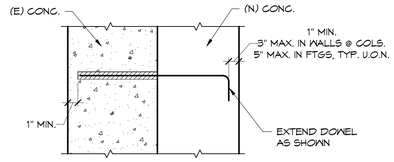

DOWEL SIZE	THREADED ROD SIZE	DRILLED HOLE DIAM.(1)	MINIMUM EMBEDMENT LENGTH(2),(3)
#3	3/8"Φ	1/2"-5/8"	4 1/2"
#4	1/2"Φ	5/8"-3/4"	6"
#5	5/8"Φ	3/4"-7/8"	7 1/2"
#6	3/4"Φ	7/8"-1"	9"
#7	7/8"Φ	1"-1 1/8"	10 1/2"
#8	1"Φ	1 1/8"-1 1/4"	12"
#9	1 1/8"Φ	1 1/4"-1 3/8"	15"

NOTES:
1. FOLLOW SPECIFIC MANUFACTURER GUIDELINES FOR DRILLED HOLE DIAMETER.
2. EMBEDMENT LENGTHS SHOWN ON SPECIFIC DETAILS OVERRULE THIS SCHEDULE.
3. DOWEL EMBEDMENT INTO WALLS & SLABS SHALL NOT EXCEED THICKNESS (IN DIRECTION OF DRILLING) MINUS ONE INCH.
4. SCHEDULE DOES NOT APPLY TO DOWELS IN BRICK MASONRY.
5. SEE SPECIFICATIONS FOR EPOXY & SUBMIT EPOXY TECHNICAL INFORMATION TO STRUCTURAL ENGINEER FOR APPROVAL.

2 EPOXY GROUTED DOWEL SCHEDULE
54.0 — 3/4" = 1'-0"

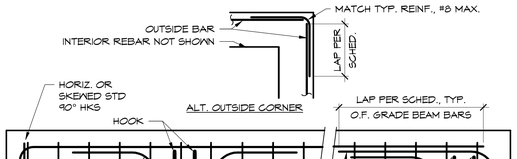

C FOUR CURTAINS OF REBAR

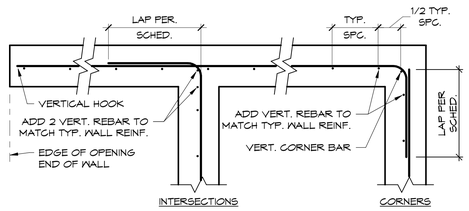

B ONE CURTAIN OF REBAR

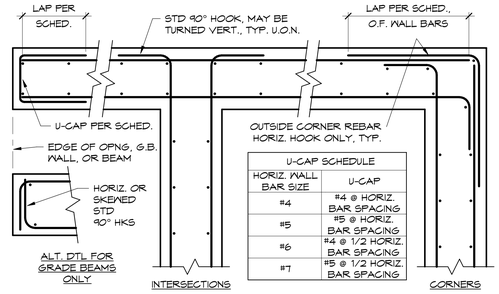

U-CAP SCHEDULE	
HORIZ. WALL BAR SIZE	U-CAP
#4	#4 @ HORIZ. BAR SPACING
#5	#5 @ HORIZ. BAR SPACING
#6	#4 @ 1/2 HORIZ. BAR SPACING
#7	#5 @ 1/2 HORIZ. BAR SPACING

A TWO CURTAINS OF REBAR

5 TYP. WALL, BEAM & GRADE BEAM INTERSECTION, PLAN DETAIL
54.0 — 3/4" = 1'-0"

TENSION LAP SPLICE SCHEDULE(1), (2), (4)			
BAR SIZE	HARDROCK CONCRETE(5)		CMU
	VERT. C.I.P. BARS, HORIZ. SLAB BARS	HORIZ. BARS IN WALLS, BEAMS & COLLECTORS, ALL SHOTCRETE BARS	
#3	22"	28"	25"
#4	29"	37"	33"
#5	36"	47"	41"
#6	43"	56"	49"
#7	63"	81"	57"
#8	72"	93"	65"
#9	81"	105"	74"
#10	91"	118"	
#11(3)	101"	131"	

NOTES:
1. THE LAP LENGTHS LISTED ABOVE ARE APPLICABLE UNDER THE FOLLOWING CONDITIONS:
   - CONCRETE STRENGTH F'c AT LEAST 3,000 psi
   - BEAM & COLUMN BARS SPACED AT LEAST 2 DIAMETERS O.C.
   - WALL & SLAB REBAR SPACED AT LEAST 3 DIAMETERS O.C.
2. FOR CONDITIONS OTHER THAN THOSE LISTED, CONTACT STRUCTURAL ENGINEER.
3. CLASS A LAP SPLICES ARE 75% OF THE LENGTHS SHOWN IN THE TABLE ABOVE. CLASS A LAP SPLICES MAY ONLY BE USED WHERE SPECIFICALLY CALLED OUT ON THE STRUCTURAL DRAWINGS (ONLY PERMITTED WHERE REBAR IS LESS THAN 50% STRESSED). CLASS A LAP SPLICES SHALL BE STAGGERED BY AT LEAST ONE SPLICE LENGTH.
4. BARS LARGER THAN #11 SHALL BE MECHANICALLY COUPLED; SMALLER BARS MAY ALSO BE MECHANICALLY COUPLED. COUPLERS SHALL BE STAGGERED AT LEAST 30".
5. WHERE A LARGER BAR LAPS A SMALLER BAR, THE SMALLER BAR LAP APPLIES, U.O.N.
6. FOR LIGHTWEIGHT AGGREGATE CONCRETE, MULTIPLY TABULATIONS BY 1.3 TIMES.

1 LAP SPLICE SCHEDULE
54.0 — 3/4" = 1'-0"

D:\AcadTemp\Revit\20056-CSU Stanislaus-Struc-R2019_sarah.aher@marstructuraldesign.com.rvt

APPROVED
DIV. OF THE STATE ARCHITECT
APP: 02-119316 INC:
REVIEWED FOR
SS☐ FLS☐ ACS☑
DATE: 03/24/2022

Division of the State Architect

Office of the State Fire Marshal

OFFICE OF THE STATE FIRE MARSHAL
APPROVED FIRE AND PANIC ONLY
03/14/22
21-0498
Approval of this plan does not authorize or approve any omission or deviation from applicable regulations. Final approval is subject to field inspection. One set of approved plans shall be available on the project site at all times.

CSUS CHILD DEVELOPMENT CENTER

CALIFORNIA STATE UNIVERSITY, STANISLAUS
ONE UNIVERSITY CIRCLE
TURLOCK, CA 95382

ehdd.

PIER 1, BAY 2
THE EMBARCADERO
SAN FRANCISCO, CA 94111

INFO@EHDD.COM
+1 415-285-9193

Consultant

Mar
Structural Design
2332 Fifth Street, Suite D
Berkeley, CA 94710
510-991-1101

Stamp

Printing	Date
95% CONSTRUCTION DOCUMENTS	06.25.2021
PERMIT SET	08.16.2021
PERMIT SET - DSA V2	12.15.2021
PERMIT SET - SFM	12.21.2021

Revisions and Description	Date

Scale
As indicated

Drawn by
SCA

EHDD Job Number
2020,056

Sheet Title
TYPICAL CONCRETE DETAILS

Sheet Number
S4.0 **V3**

12/9/2021 11:56:18 PM

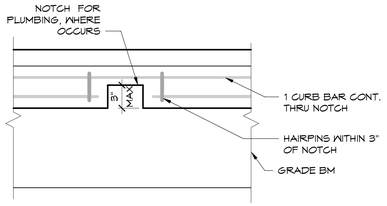

SEE 1/S6.0 FOR MUDSILL A.B. PLACEMENT AROUND NOTCH

16 S4.1 NOTCH IN CURB
1 1/2" = 1'-0"

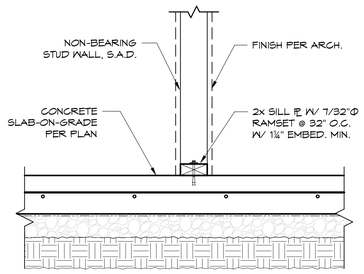

12 S4.1 INTERIOR NON-BEARING WALL
1 1/2" = 1'-0"

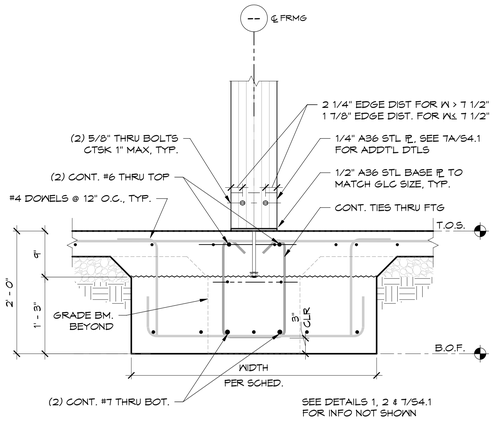

8 S4.1 TYP. PAD FOOTING AT INTERIOR
1" = 1'-0"

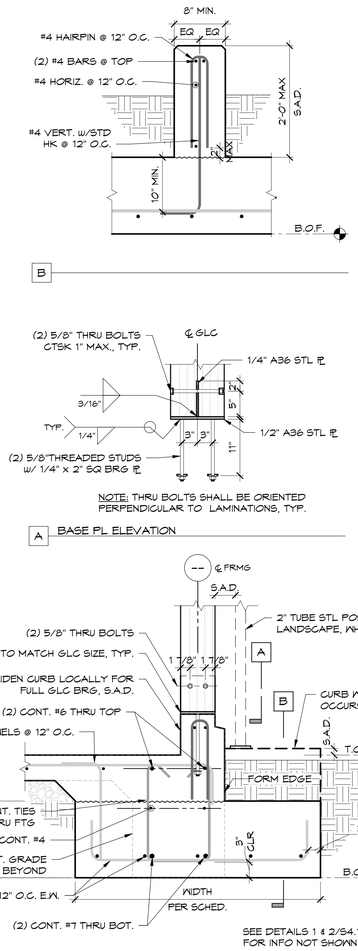

7 S4.1 TYP. PAD FOOTING AT EXTERIOR
1" = 1'-0"

B

NOTE: THRU BOLTS SHALL BE ORIENTED PERPENDICULAR TO LAMINATIONS, TYP.

A BASE PL ELEVATION

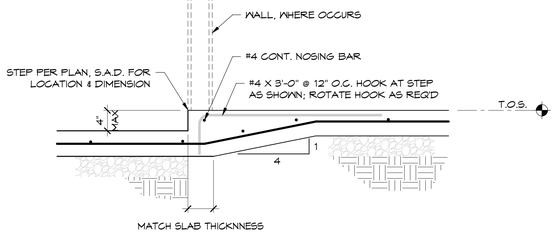

10 S4.1 TYP. SLAB STEP < 4"
1" = 1'-0"

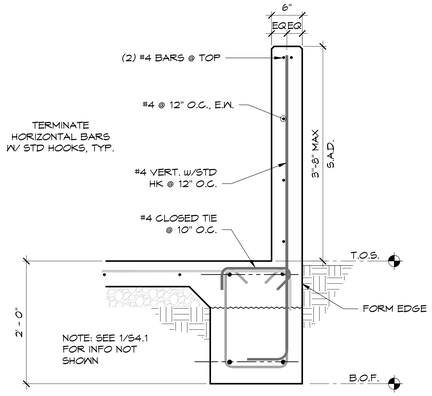

9 S4.1 CONC. STEM WALL
1" = 1'-0"

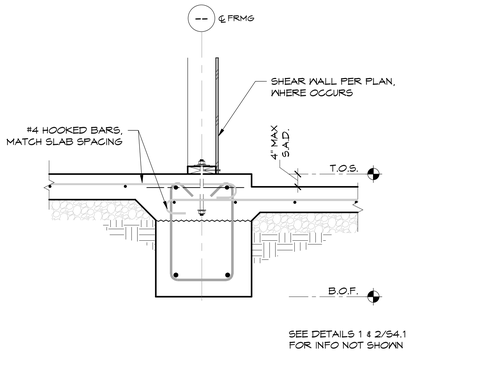

6 S4.1 INT. GRADE BM AT SLAB STEP
1" = 1'-0"

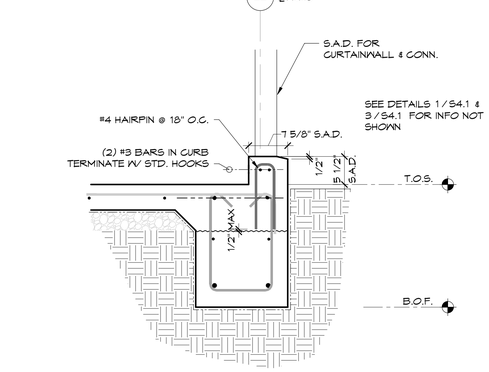

5 S4.1 PERIM. GRADE BM @ CURTAINWALL
1" = 1'-0"

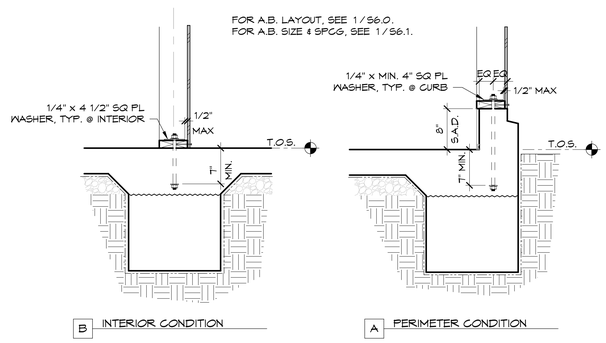

3 S4.1 TYP. MUDSILL ANCHOR DETAIL
1" = 1'-0"

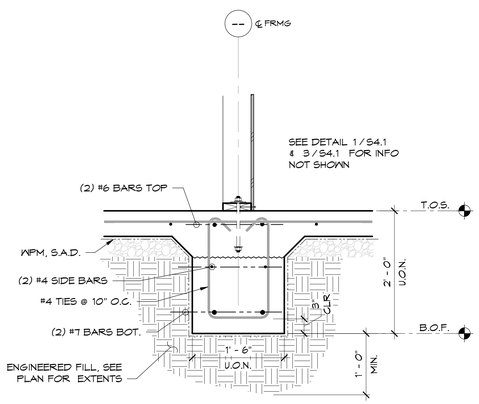

2 S4.1 TYP. INTERIOR GRADE BM
1" = 1'-0"

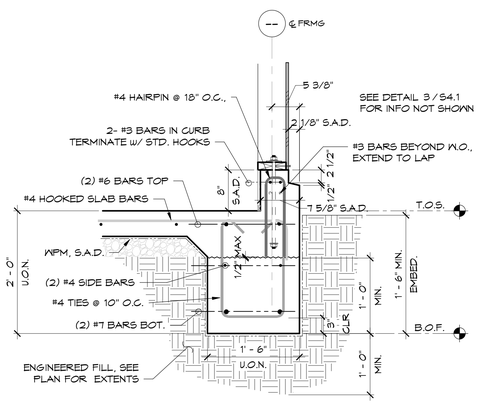

1 S4.1 TYP. PERIMETER GRADE BM
1" = 1'-0"

D:\AcadTemp\Revit\20056-CSU Stanislaus-Struc-R2019_sarah.aher@marstructuraldesign.com.rvt

Division of the State Architect

APPROVED
DIV. OF THE STATE ARCHITECT
APP: 02-119316 INC:
REVIEWED FOR
SS☐ FLS☐ ACS☑
DATE: 03/24/2022

Office of the State Fire Marshal

OFFICE OF THE STATE FIRE MARSHAL
APPROVED FIRE AND PANIC ONLY
03/14/22
21-0498
Approval of this plan does not authorize or approve any omission or deviation from applicable regulations. Final approval is subject to field inspection. One set of approved plans shall be available on the project site at all times.

CSUS CHILD DEVELOPMENT CENTER

CALIFORNIA STATE UNIVERSITY, STANISLAUS
ONE UNIVERSITY CIRCLE
TURLOCK, CA 95382

ehdd.

PIER 1, BAY 2
THE EMBARCADERO
SAN FRANCISCO, CA 94111

INFO@EHDD.COM
+1 415-285-9193

Consultant

Mar
Structural Design
2332 Fifth Street, Suite D
Berkeley, CA 94710
510-991-1101

Stamp

Printing	Date
95% CONSTRUCTION DOCUMENTS	06.25.2021
PERMIT SET	08.16.2021
PERMIT SET - DSA V2	12.15.2021
PERMIT SET - SFM	12.21.2021

Revisions and Description	Date

Scale
As indicated

Drawn by
SCA

EHDD Job Number
2020,056

Sheet Title
CONCRETE FOUNDATION DETAILS

Sheet Number
S4.1 **V3**

12/9/2021 11:56:19 PM

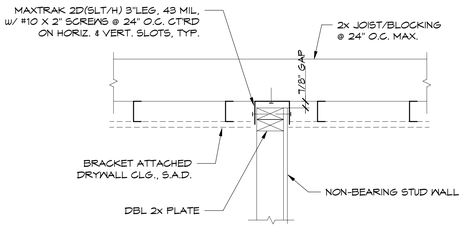

12 INTERIOR NON-BEARING WALL AT JOISTS
S6.0 — 1 1/2" = 1'-0"

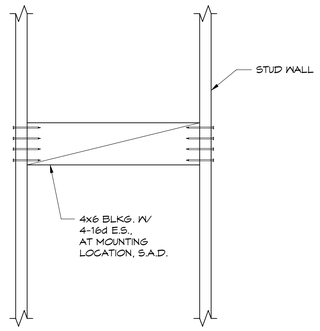

NOTES:
1. HANDRAILS & CONN. BY OTHERS.
2. PLYWOOD NOT SHOWN FOR CLARITY.

11 TYPICAL BLOCKING @ WALL
S6.0 — 1 1/2" = 1'-0"

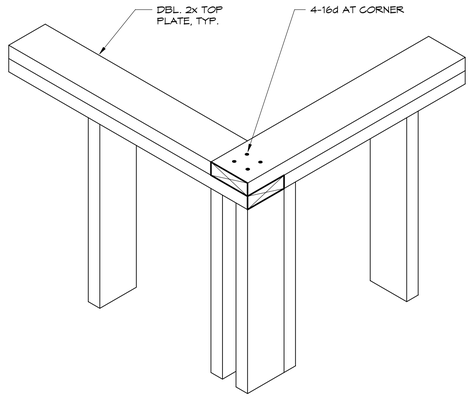

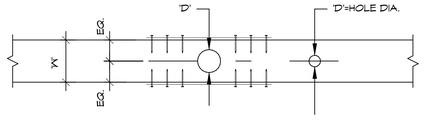

PLAN OF PLATE

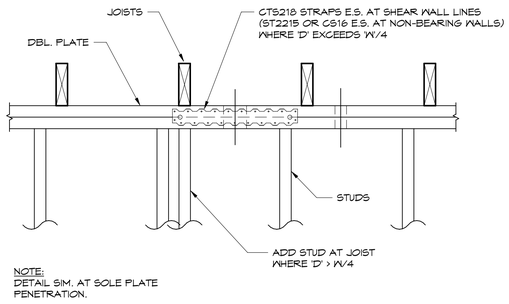

NOTE:
DETAIL SIM. AT SOLE PLATE
PENETRATION.

ELEVATION OF PLATE

6 HOLES IN PLATES OF WALLS
S6.0 — 1 1/2" = 1'-0"

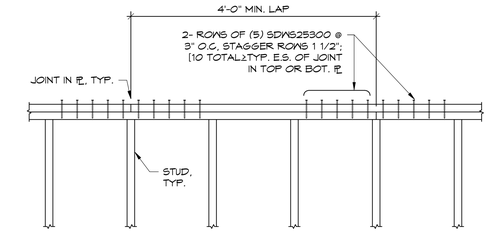

TOP PLATE SPLICE: SDWS OPTION

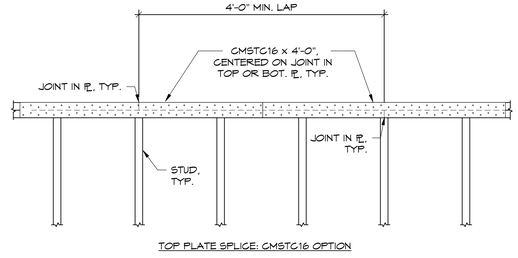

TOP PLATE SPLICE: GMSTC16 OPTION

NOTE: SEE PLAN & DETAILS FOR DOUBLE TOP PL & STUD SIZE.

5 TYP. NAILED TOP PLATE SPLICE
S6.0 — 1" = 1'-0"

WALL MARK	NAILING	CONNECTION STUD
6	16d @ 6" O.C.	2x
4	16d @ 4" O.C.	3x
3	16d @ 3" O.C.	3x
2	16d @ 2" O.C.	3x

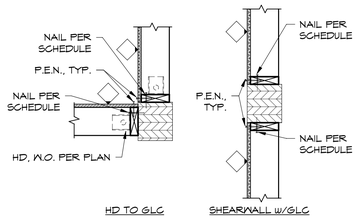

PLAN VIEW

8 SHEAR WALL DETAIL @ GLC
S6.0 — 1" = 1'-0"

WALL MARK	NAILING	CONNECTION STUD
6	16d @ 6" O.C.	2x
4	16d @ 4" O.C.	3x
3	16d @ 3" O.C.	3x
2	16d @ 2" O.C.	3x

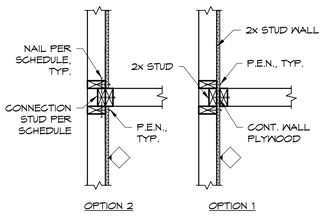

PLAN VIEW

4 SHEAR WALL DETAIL @ INTERSECTING PARTITION WALL
S6.0 — 1" = 1'-0"

NOTE:
NAILING FOR MULTIPLE STUDS SHALL BE 16d @
12" O.C. U.O.N. ON DWGS

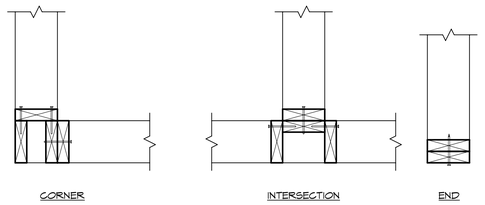

PLAN VIEW

7 TOP PLATE CORNER LAP
S6.0 — 1 1/2" = 1'-0"

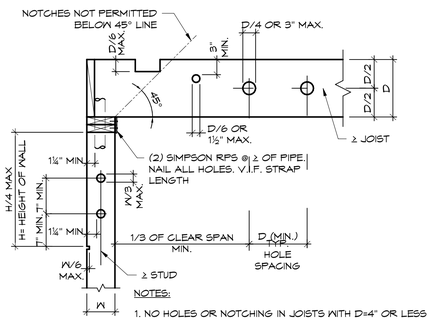

NOTES:
1. NO HOLES OR NOTCHING IN JOISTS WITH D=4" OR LESS
2. FOR HOLES IN TJI JOISTS, SEE MANUFACTURER'S INFO.

3 ALLOWABLE HOLES & NOTCHES IN SAWN LUMBER JOISTS & STUDS
S6.0 — 1" = 1'-0"

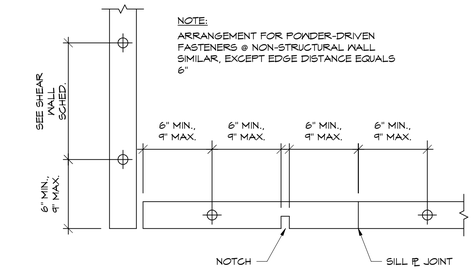

2 TYPICAL SILL BOLTING LAYOUT
S6.0 — 1 1/2" = 1'-0"

D:\AcadTemp\Revit\20056-CSU Stanislaus-Struc-R2019_sarah.aher@marstructuraldesign.com.rvt

Division of the State Architect
APPROVED
DIV. OF THE STATE ARCHITECT
APP: 02-119316 INC:
REVIEWED FOR
SS☐ FLS☐ ACS☑
DATE: 03/24/2022

Office of the State Fire Marshal
OFFICE OF THE STATE FIRE MARSHAL
APPROVED FIRE AND PANIC ONLY
03/14/22
21-0498
Approval of this plan does not authorize or approve any omission or deviation from applicable regulations. Final approval is subject to field inspection. One set of approved plans shall be available on the project site at all times.

CSUS CHILD DEVELOPMENT CENTER

CALIFORNIA STATE
UNIVERSITY, STANISLAUS
ONE UNIVERSITY CIRCLE
TURLOCK, CA 95382

ehdd.
PIER 1, BAY 2
THE EMBARCADERO
SAN FRANCISCO, CA 94111
INFO@EHDD.COM
+1 415-285-9193

Consultant
Mar
Structural Design
2332 Fifth Street, Suite D
Berkeley, CA 94710
510-991-1101

Stamp

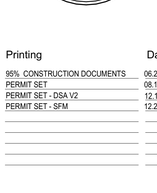

Printing / Date

Printing	Date
95% CONSTRUCTION DOCUMENTS	06.25.2021
PERMIT SET	08.16.2021
PERMIT SET - DSA V2	12.15.2021
PERMIT SET - SFM	12.21.2021

Revisions and Description / Date

Scale
As indicated

Drawn by
SCA

EHDD Job Number
2020.056

Sheet Title
TYPICAL WOOD FRAMING DETAILS

Sheet Number
S6.0 **V3**

12/9/2021 11:56:20 PM

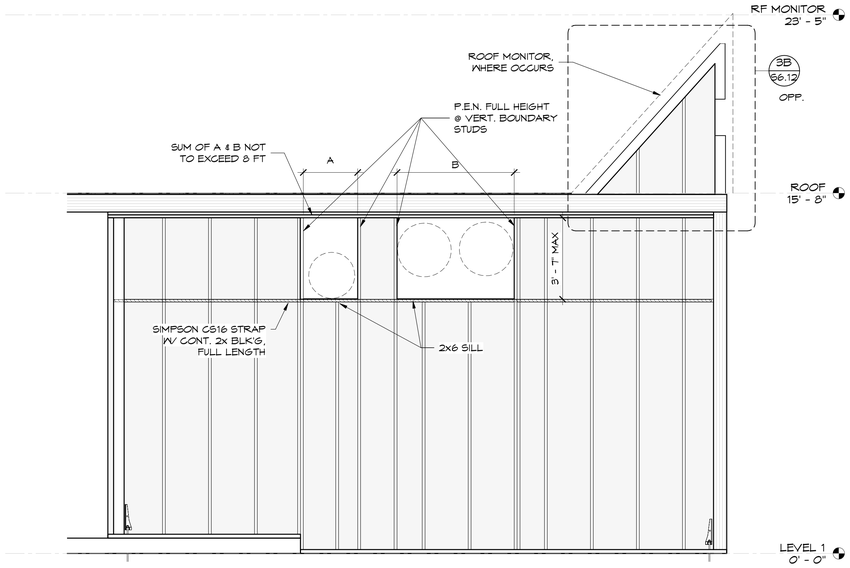

SEE 1/S6.1 FOR INFO NOT SHOWN.

5 / S6.1 TYP. SHEAR WALL W/LARGE OPENINGS

3/8" = 1'-0"

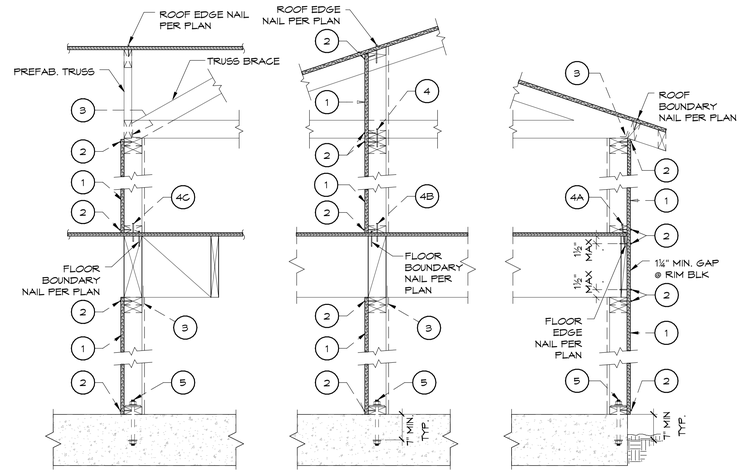

CONDITION C | CONDITION B | CONDITION A

NOTE: DIAGRAMS ABOVE IDENTIFIES FASTENERS IN TABLE BELOW. SEE STRUCTURAL DETAILS FOR ACTUAL CONFIGURATION.

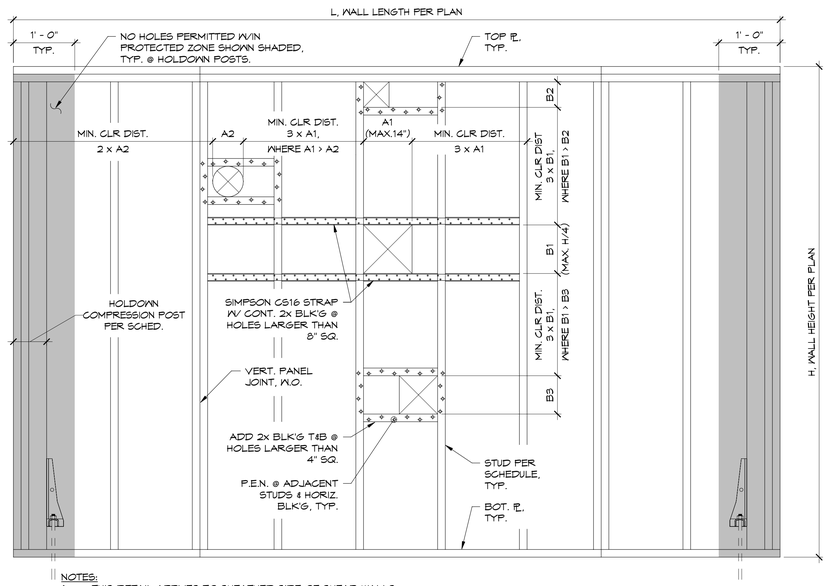

NOTES:
1. THIS DETAIL APPLIES TO SHEATHED SIDE OF SHEAR WALLS. FOR DOUBLE-SIDED SHEAR WALLS, APPLY THIS DETAIL TO EACH SIDE.
2. PLYWOOD SHEATHING NOT SHOWN FOR CLARITY.
3. DEPTH OF BLOCKING TO MATCH STUDS.
4. HOLES 4" SQ. OR SMALLER DO NOT REQUIRE BLK'G PROVIDED THAT MINIMUM CLEAR DISTANCES ARE SATISFIED.
5. LOCATE ALL HOLES WITHIN STUD BAYS. DO NOT CUT OR NOTCH STUDS.

3 / S6.1 ALLOWABLE HOLES IN SHEAR WALLS

1" = 1'-0"

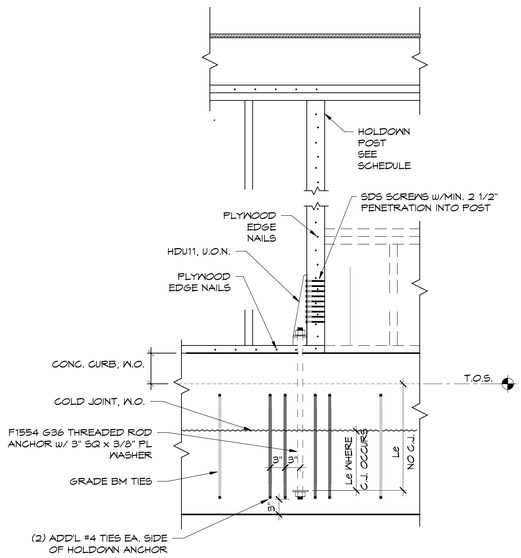

END OF WALL - ELEVATION

HOLDOWN SCHEDULE			
HOLDOWN	ANCHOR DIA.	Le (MIN.)	POST, U.O.N.
HDU11	1"Φ	11"	6x8

2 / S6.1 TYPICAL HOLDOWN SCHEDULE

1" = 1'-0"

SHEAR WALL SCHEDULE

MARK	SHEATHING (1)	WALL FRAMING	EDGE NAILING (P.E.N.) (2)	FRAMING CLIPS (3)	SOLE PL NAILING (4)		ANCHOR BOLTS (W/ WASHERS) (5)	ALLOWABLE CAPACITY
6	1/2" APA RATED CDX	2x MUDSILL	10d @ 6" O.C.	LTP4 OR A35 @ 16" O.C. (2 CLIPS PER 24" JST. BAY)	A	16d @ 12" O.C. TO 2x BLKG	5/8"Φ @ 48" O.C.	310plf
					B	16d @ 4" O.C. STAG. TO 4x BLKG/BM		
					C			
2	1/2" APA RATED CDX	3x MUDSILL, 3x STUDS @ PLYWOOD JOINTS	10d @ 2" O.C.	LTP4 OR A35 @ 8" O.C. (3 CLIPS PER 24" JST. BAY)	A	SDWS22500DB @ 8" O.C. STAG. TO 4x BLKG/BM	5/8"Φ @ 16" O.C.	770plf
					B			
					C			
22	1/2" APA RATED CDX, BOTH SIDES	4x MUDSILL, 3x STUDS @ PLYWOOD JOINTS	10d @ 2" O.C.	LTP4 OR A35 @ 8" O.C. E.S. (3 CLIPS PER 24" JST. BAY E.S.)	A	SDWS22600DB @ 3" O.C. STAG. TO 4x BLKG/BM	5/8"Φ @ 8" O.C.	1540plf
					B			
					C			

NOTES:
1. PRIOR TO CONSTRUCTING WALL, REVIEW LATEST DIMENSIONED ARCHITECTURAL DRAWINGS AND NOTIFY STRUCTURAL ENGINEER OF ANY LOCATIONS WHERE MINIMUM SHEARWALL LENGTHS WILL NOT BE MET. MINIMUM LENGTHS BASED ON OUT TO OUT FACE OF HOLDOWN POSTS.
2. ALL WALL PLYWOOD NAILS TO BE 10d COMMON (.148"Φx3") SMOOTH-SHANK PLYWOOD NAILS, TYP., U.O.N.
3. PROVIDE DOUBLE ROW P.E.N. TO ALL HOLDOWN POSTS.
4. ALL INFORMATION IN THE ABOVE SCHEDULE RELATES TO THE ITEMS SHOWN IN THE ACCOMPANYING WALL SECTIONS. ALL PARTS REQUIRED FOR EACH SHEAR WALL TYPE OCCUR IN THE WALLS BETWEEN THE LEVEL REPRESENTED BY THE FRAMING PLAN, WHERE THE SHEAR WALL TYPES AND LOCATIONS ARE SHOWN, AND THE LEVEL ABOVE.
5. WHERE THE SHEAR WALL SCHEDULE CALLS FOR SHEATHING ON ONE SIDE OF THE WALL ONLY, PLACE SHEATHING ON SIDE OF WALL WHERE SHEAR WALL SYMBOL OCCURS.
6. HORIZONTAL PLYWOOD SPLICES TO OCCUR AT RIM JOIST, WHERE WALL HEIGHT DICTATES HORIZONTAL SPLICE AT WALL, PROVIDE 3x BLOCKING. DO NOT SPLICE AT DOUBLE 2x TOP PLATE.
7. USE 2x STUDS, DOUBLE TOP PLATE AND SOLE PLATE U.O.N. PROVIDE 3x FRAMING AT ALL PANEL EDGES.
8. SEE DETAIL FOR TYPICAL SHEARWALL DETAIL AT INTERSECTING PARTITION WALL.
9. SHEATHING T4II/S6.05 IS NOMINAL, ACTUAL THICKNESS EQUIVALENTS ARE: 1/2"=15/32"; 5/8"=19/32"; 3/4"=23/32"
10. TABLE ABOVE IS BASED ON 3/4" FLOOR PLYWOOD MAX. FOR THICKER PLYWOOD, CONSULT STRUCTURAL ENGINEER.
11. FOR DOUBLE SIDED SHEAR WALLS, STAGGER PANEL EDGES OF EACH SIDE AND INSTALL RIM/BLOCKING TO MATCH FULL WIDTH OF TOP PLATE.
12. 16d TRANSFERS ARE NOT ALLOWED THROUGH 3x SILLS OR SOLE PLATES, OR SHEATHING THICKER THAN 3/4".
13. PLATE WASHERS TO EXTEND TO WITHIN 1/2" OF THE EDGE OF THE BOTTOM PLATE ON THE SIDE(S) WITH SHEATHING.

1 / S6.1 SHEARWALL SCHEDULE

1" = 1'-0"

Division of the State Architect
APPROVED
DIV. OF THE STATE ARCHITECT
APP: 02-119316 INC:
REVIEWED FOR
SS☐ FLS☐ ACS☑
DATE: 03/24/2022

Office of the State Fire Marshal

OFFICE OF THE STATE FIRE MARSHAL
APPROVED FIRE AND PANIC ONLY
03/14/22
21-0498
Approval of this plan does not authorize or approve any omission or deviation from applicable requirements. Final approval is subject to field inspection. One set of approved plans shall be available on the project site at all times.

CSUS CHILD DEVELOPMENT CENTER

CALIFORNIA STATE UNIVERSITY, STANISLAUS
ONE UNIVERSITY CIRCLE
TURLOCK, CA 95382

ehdd.

PIER 1, BAY 2
THE EMBARCADERO
SAN FRANCISCO, CA 94111

INFO@EHDD.COM
+1 415-285-9193

Consultant

Mar
Structural Design
2332 Fifth Street, Suite D
Berkeley, CA 94710
510-991-1101

Stamp

Printing	Date
95% CONSTRUCTION DOCUMENTS	06.25.2021
PERMIT SET	08.16.2021
PERMIT SET - DSA V2	12.15.2021
PERMIT SET - SFM	12.21.2021

Revisions and Description	Date

Scale
As indicated

Drawn by
SCA

EHDD Job Number
2020,056

Sheet Title
TYPICAL WOOD SHEARWALL DETAILS

Sheet Number
S6.1 **V3**

D:\AcadTemp\Revit\20056-CSU Stanislaus-Struc-R2019_sarah.aher@marstructuraldesign.com.rvt

12/9/2021 11:56:21 PM

A. EXTERIOR WALL

MAX WIDTH OPENING	① HEADER	② KING STUD	③ JACK STUD	④ SILL	⑤ MIN. KING STUD CONN @ T&B EA. STUD	⑥ MIN. HEADER CONN.	⑦ MIN. SILL CONN. @ EA. SILL	FACE MOUNT CONCEALED HANGER OPTION SEE NOTE 3
4'-0"	6x6	(2) 2x6	2x6	(2) 2x6	3-16d END	3-16d END	2-8d T.N.	-
6'-0"	6x10	(2) 2x6	(2) 2x6	(2) 2x6	3-16d END	4-16d END	3-8d T.N.	HUCQ610-SDS
8'-0"	6x12 DF NO. 1	(3) 2x6	(2) 2x6	(2) 2x6	3-16d END	6-16d END	4-8d T.N.	HUCQ612-SDS
10'-6"	6x12 DF NO. 1	(3) 2x6	(2) 2x6	(2) 2x6	3-16d END	6-16d END	4-8d T.N.	-

B. INTERIOR- 2x6 WALL

MAX WIDTH OPENING	① HEADER	② KING STUD	③ JACK STUD	④ SILL	⑤ MIN. KING STUD CONN @ T&B EA. STUD	⑥ MIN. HEADER CONN.	⑦ MIN. SILL CONN. @ EA. SILL
6'-0"	6x6	2x6	2x6	2x6	2-16d END	2-16d END	2-8d T.N.
10'-0"	6x8	2x6	2x6	2x6	2-16d END	2-16d END	2-8d T.N.

C. INTERIOR- 2x4 WALL

MAX WIDTH OPENING	① HEADER	② KING STUD	③ JACK STUD	④ SILL	⑤ MIN. KING STUD CONN @ T&B EA. STUD	⑥ MIN. HEADER CONN.	⑦ MIN. SILL CONN. @ EA. SILL
4'-0"	4x4	2x4	2x4	2x4	2-16d END	2-16d END	2-8d T.N.
6'-0"	4x6	(2) 2x4	2x4	2x4	2-16d END	2-16d END	2-8d T.N.
10'-0"	4x10	(2) 2x4	2x4	(2) 2x4	2-16d END	2-16d END	2-8d T.N.

NOTES :

1. THIS SCHEDULE APPLIES TO ALL WALL OPENINGS U.O.N.
2. HEADERS & STUDS SHALL BE DFL NO. 2 OR BETTER, U.O.N. ON SCHEDULE
3. PROVIDE 2-A34 CLIPS WHERE HEADER FRAMES TO POST USING HANGER OPTION, TYP.

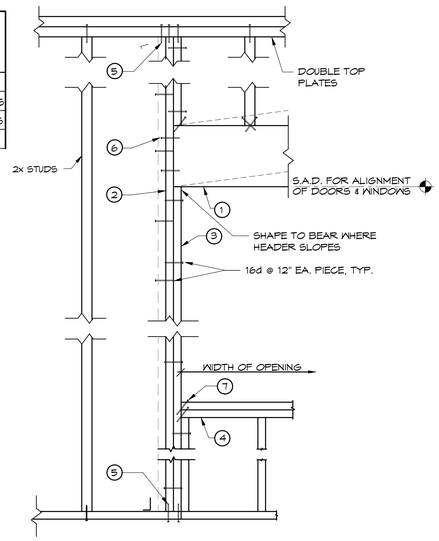

12 / S6.2 TYP. WALL FRAMING AROUND OPENINGS

1" = 1'-0"

REQUIRED NAIL SIZES				
NAME	DIAMETER	LENGTH	MINIMUM PENETRATION	NOTES
20d COMMON	.192"	4"	2 1/4"	(1)
16d COMMON	.162"	3 1/2"	2"	(1)
16d SINKER	.148"	3 1/4"	1 3/4"	(1), (2), (3)
12d COMMON	.148"	3 1/4"	1 3/4"	(1), (3)
10d COMMON	.148"	3"	1 3/4"	(1), (4)
10d SHORT	.148"	2 1/2"	1 3/4"	(1), (4), (5)
8d COMMON	.131"	2 1/2"	1 1/2"	(1)
N54A	.250"	2 1/2"	2 1/4"	(6)
N20AN	.192"	2 1/8"	2"	(6)
N20A	.192"	1 1/2"	1 5/8"	(6)

NOTES :

1. MINIMUM PENETRATION FOR FULL NAIL LATERAL VALUE IS 12 DIAMETERS, ROUNDED TO NEAREST 1/8".
2. 16d SINKERS ARE ONLY PERMITTED FOR GENERAL FRAMING IF SPECIFICALLY ALLOWED IN THE STRUCTURAL NOTES. 16d SINKERS ARE REQUIRED FOR MSTC STRAPS, BUT MAY NOT BE SUBSTITUTED FOR 16d COMMON NAILS IN ANY OTHER METAL CONNECTORS.
3. 16d SINKER AND 12d COMMON ARE IDENTICAL SIZES AND MAY BE USED INTERCHANGEABLY.
4. WHERE PLYWOOD IS NAILED TO 2x FLAT BLOCKING W/ 10d, INCREASE NUMBER OF NAILS BY 18%, i.e., DECREASE NAIL SPACING BY FACTOR OF 0.85, OR USE 3x FLAT BLOCKING.
5. 10d SHORT IS OK FOR PLYWOOD UP TO 3/4" THICK.
6. N54A, N20AN AND N20A ARE SPECIAL ANNULAR RING SHANK NAILS FOR USE IN SOME SIMPSON CONNECTORS.
7. FOR ROOF SHT'G, NAILS SHALL HAVE DEFORMED SHANKS (HELICAL/SCREW OR ANNULAR/RING THREAD).

5 / S6.2 NAIL SIZE SCHEDULE

1" = 1'-0"

MINIMUM NAILING SCHEDULE	
CONNECTION	NAILING
JOIST OR RAFTER TO MUDSILL, TOP ℄ OR BEAM	3-8d TN
BRIDGING TO JOIST	2-8d TN EA. END
SOLE ℄ TO JOIST OR BLOCKING	16d @ 16" O.C. FACE NAIL
SOLE ℄ TO JOIST OR BLOCKING @ BRACED WALL PANELS	3-16d PER 16" FACE NAIL
TOP ℄ TO STUD	2-16d END NAIL OR 3-8d TN
STUD TO SOLE OR TOP ℄	4-8d TN OR 2-16d END NAIL
STITCHING DBL STUDS OR SISTERING JOISTS	16d @ 24" O.C. FACE NAIL STAG.
STITCHING DBL TOP ℄'S	16d @ 16" O.C. FACE NAIL STAG.
DOUBLE TOP ℄ LAP SPLICES	8-16d FACE NAIL
BLOCKING BETWEEN JOISTS OR RAFTERS	3-8d TN E.S. EA. END OR 3-16d END NAIL
RIM JOIST TO TOP ℄	8d TN @ 6" O.C.
RIM JOIST TO JOIST OR BLKG	3-16d FACE NAIL OR 3-8d TN E.S.
TOP ℄'S, LAPS & INTERSECTIONS	4-16d FACE NAIL
BUILT-UP 2x HEADER	16d @ 16" O.C. FACE NAIL T&B EA. ELEMENT
HEADER TO STUD	4-8d FACE NAIL EA. END OF BEAM
JOIST LAP SPLICE OVER WALL	6-16d FACE NAIL
CEILING JOISTS TO PARALLEL RAFTERS	3-16d FACE NAIL
BUILT-UP CORNER STUDS	16d @ 24" O.C.
IN-WALL POST TO TOP & BOT. ℄'S	(2) 8d TN ON 2 OPPOSITE SIDES T&B
SHEATHING TO FRAMING	10d @ 6" O.C. @ PANEL EDGES, 12" O.C. FIELD

NOTES :

1. COMMON NAILS SHALL BE USED EXCEPT WHERE OTHERWISE STATED.
2. MINIMUM NAILING SCHEDULE ABOVE IS MODIFIED FROM IBC TABLE 2304.9.1.
3. MINIMUM NAILING SHOWN ON SCHEDULE UNLESS OTHERWISE NOTED ON SPECIFIC OR OTHER TYPICAL DETAILS.
4. SEE 7/S6.02 FOR MINIMUM NAIL SPACING.

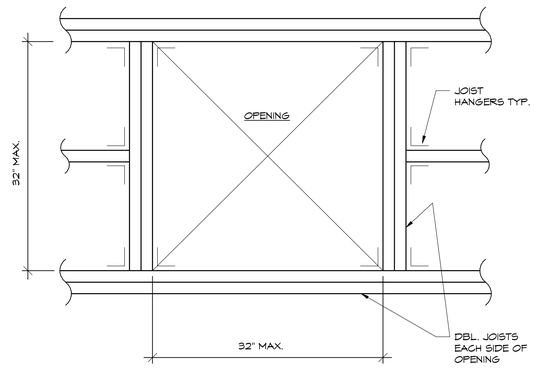

NOTE : WHEN OPENING EXCEEDS 32" SEE PLAN

2 / S6.2 FRAMING AT ROOF OPENING

1 1/2" = 1'-0"

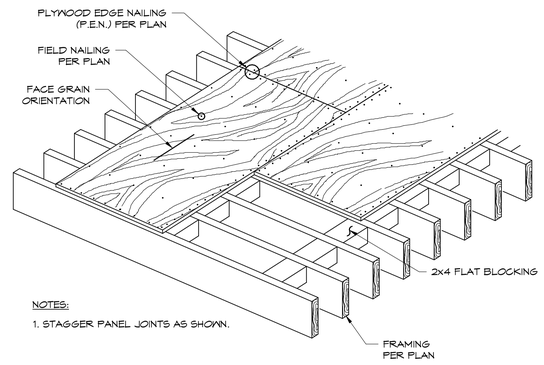

NOTES:

1. STAGGER PANEL JOINTS AS SHOWN.

1 / S6.2 ROOF PLYWOOD NAILING (SOLID)

1" = 1'-0"

4 / S6.2 TYPICAL NAILING SCHEDULE

NTS

D:\AcadTemp\Revit\20056-CSU Stanislaus-Struc-R2019_sarah.aher@marstructuraldesign.com.rvt

Division of the State Architect

APPROVED
DIV. OF THE STATE ARCHITECT
APP: 02-119316 INC:
REVIEWED FOR
SS☐ FLS☐ ACS☑
DATE: 03/24/2022

Office of the State Fire Marshal

OFFICE OF THE STATE FIRE MARSHAL
APPROVED FIRE AND PANIC ONLY
03/14/22
21-0498
Approval of this plan does not authorize or approve any omission or deviation from applicable regulations. Final approval is subject to field inspection. One set of approved plans shall be available on the project site at all times.

CSUS CHILD DEVELOPMENT CENTER

CALIFORNIA STATE UNIVERSITY, STANISLAUS
ONE UNIVERSITY CIRCLE
TURLOCK, CA 95382

ehdd.

PIER 1, BAY 2
THE EMBARCADERO
SAN FRANCISCO, CA 94111

INFO@EHDD.COM
+1 415-285-9193

Consultant

Mar
Structural Design
2332 Fifth Street, Suite D
Berkeley, CA 94710
510-991-1101

Stamp

REGISTERED PROFESSIONAL ENGINEER
DAVID CLIFTON MAR
No. S3951
Exp. 3-31-22
STRUCTURAL
STATE OF CALIFORNIA

Printing	Date
95% CONSTRUCTION DOCUMENTS	06.25.2021
PERMIT SET	08.16.2021
PERMIT SET - DSA V2	12.15.2021
PERMIT SET - SFM	12.21.2021

Revisions and Description	Date

Scale
As indicated

Drawn by
SCA

EHDD Job Number
2020,056

Sheet Title
TYPICAL WOOD FRAMING DETAILS

Sheet Number
S6.2 **V3**

12/9/2021 11:56:23 PM

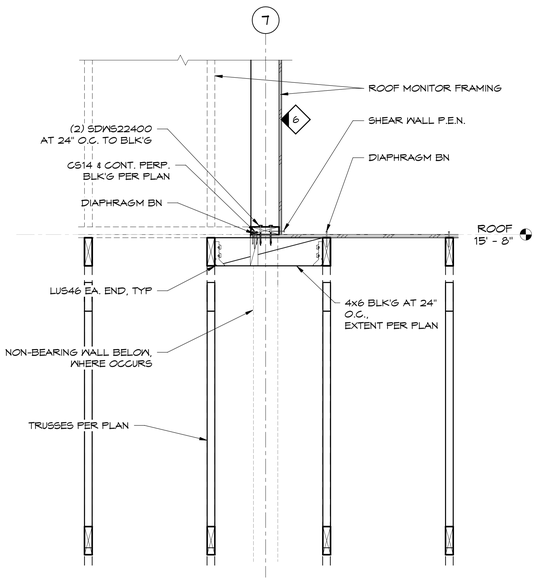

8 S6.10 DIAPHRAGM TRANSFER
1" = 1'-0"

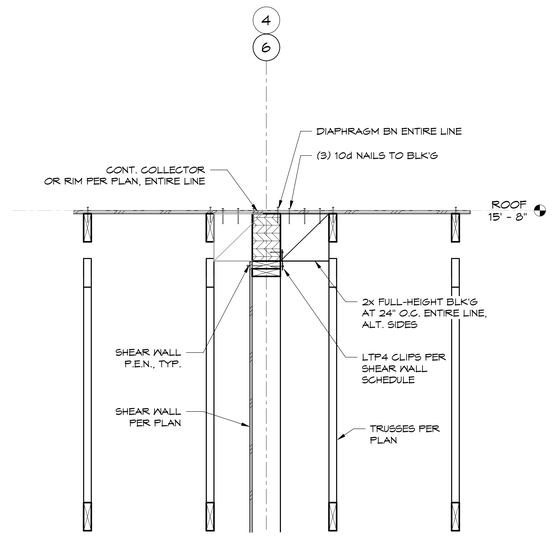

7 S6.10 TYP. INTERIOR SHEAR TRANSFER
1" = 1'-0"

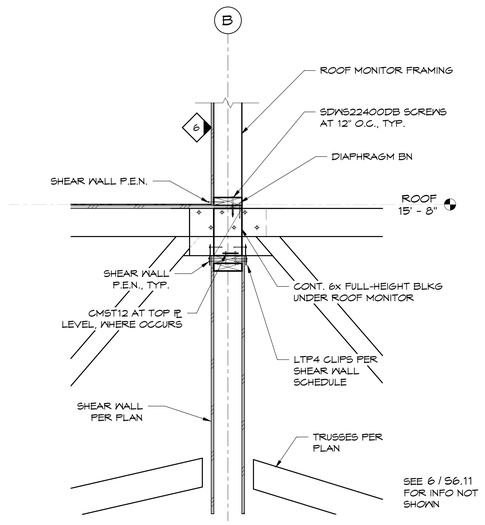

6 S6.10 WALL TRANSFER AT ROOF MONITOR
1" = 1'-0"

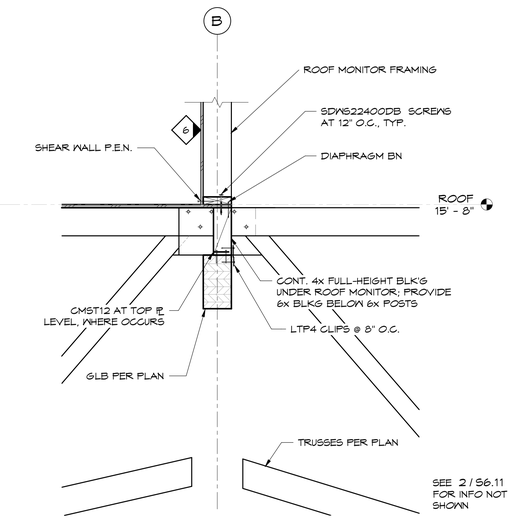

5 S6.10 GLB TRANSFER AT ROOF MONITOR
1" = 1'-0"

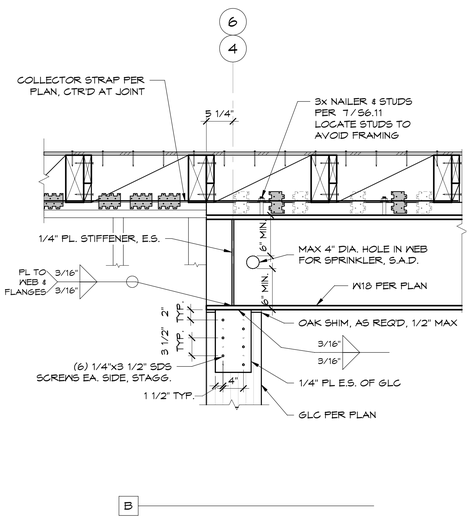

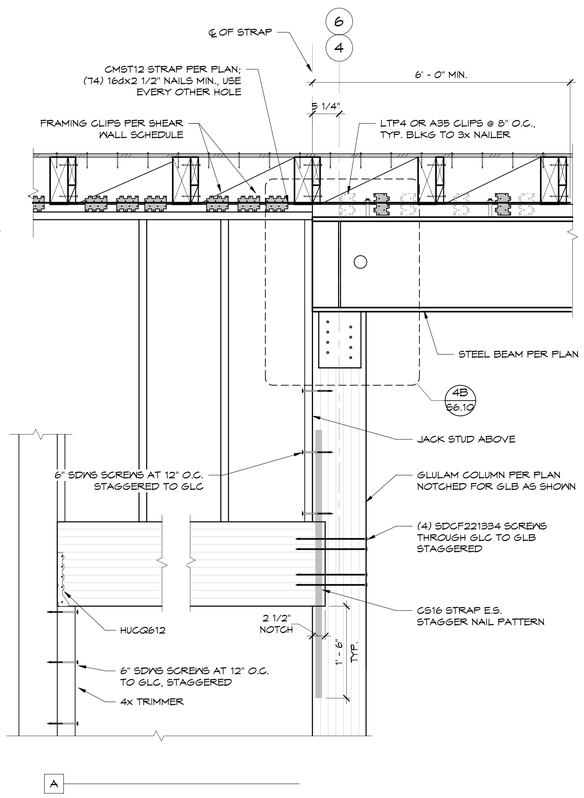

4 S6.10 STEEL BEAM TO GLC
1" = 1'-0"

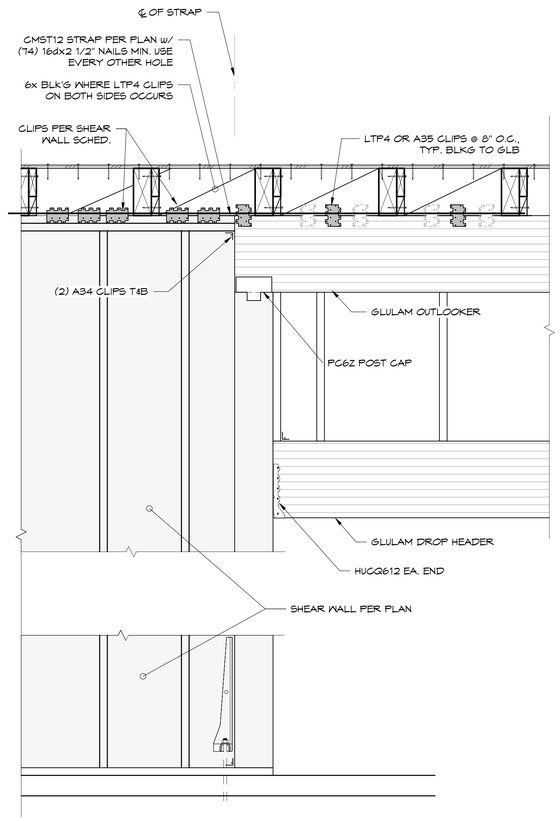

3 S6.10 SHEARWALL AT EXT. HEADER
1" = 1'-0"

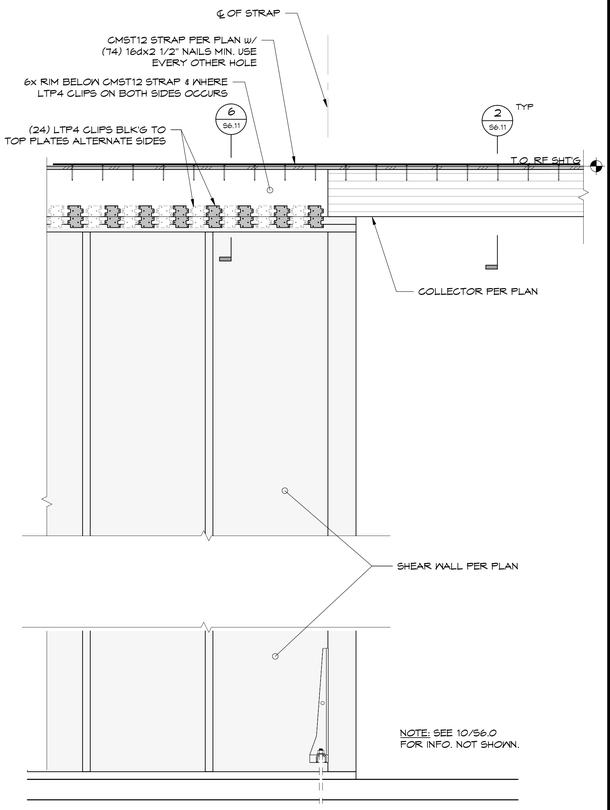

2 S6.10 INT. NORTH-SOUTH SHEAR WALL
1" = 1'-0"

D:\AcadTemp\Revit\20056-CSU Stanislaus-Struc-R2019_sarah.aher@marstructuraldesign.com.rvt

Division of the State Architect
APPROVED
DIV. OF THE STATE ARCHITECT
APP: 02-119316 INC:
REVIEWED FOR
SS☐ FLS☐ ACS☑
DATE: 03/24/2022

Office of the State Fire Marshal
OFFICE OF THE STATE FIRE MARSHAL
APPROVED FIRE AND PANIC ONLY
03/14/22
21-0498
Approval of this plan does not authorize or approve any omission or deviation from applicable requirements. Final approval is subject to field inspection. One set of approved plans shall be available on the project site at all times.

CSUS CHILD DEVELOPMENT CENTER

CALIFORNIA STATE UNIVERSITY, STANISLAUS
ONE UNIVERSITY CIRCLE
TURLOCK, CA 95382

ehdd.

PIER 1, BAY 2
THE EMBARCADERO
SAN FRANCISCO, CA 94111

INFO@EHDD.COM
+1 415-285-9193

Consultant

Mar
Structural Design
2332 Fifth Street, Suite D
Berkeley, CA 94710
510-991-1101

Stamp

REGISTERED PROFESSIONAL ENGINEER
DAVID CLIFTON MAR
No. S3951
Exp. 3-31-22
STATE OF CALIFORNIA
CIVIL

Printing	Date
95% CONSTRUCTION DOCUMENTS	06.25.2021
PERMIT SET	08.16.2021
PERMIT SET - DSA V2	12.15.2021
PERMIT SET - SFM	12.21.2021

Revisions and Description	Date

Scale
1" = 1'-0"

Drawn by
AJS

EHDD Job Number
2020,056

Sheet Title
WOOD FRAMING DETAILS

Sheet Number
S6.10 V3

12/9/2021 11:56:23 PM

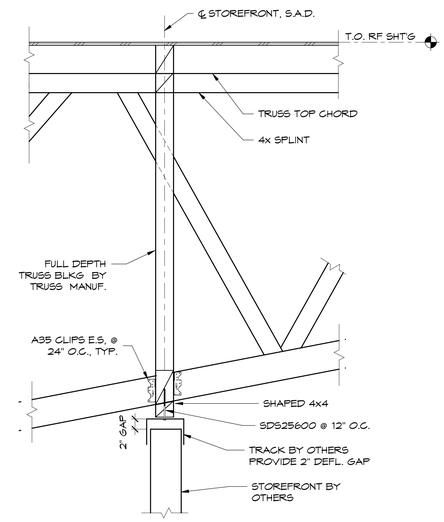

8 S6.11 TRUSS BLOCKING @ STOREFRONT
1" = 1'-0"

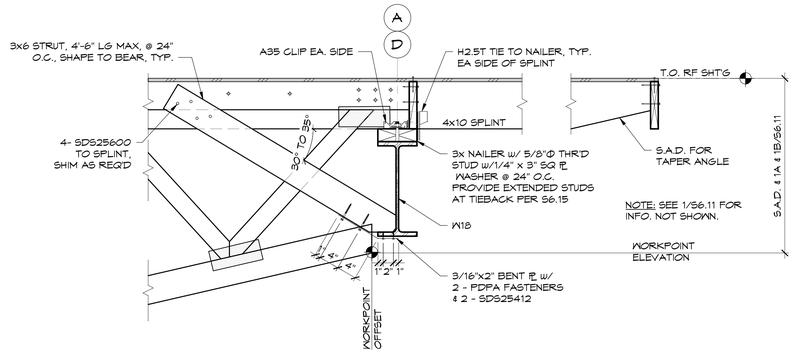

7 S6.11 SISTERED CANTILEVERED SPLINT @ WF
1" = 1'-0"

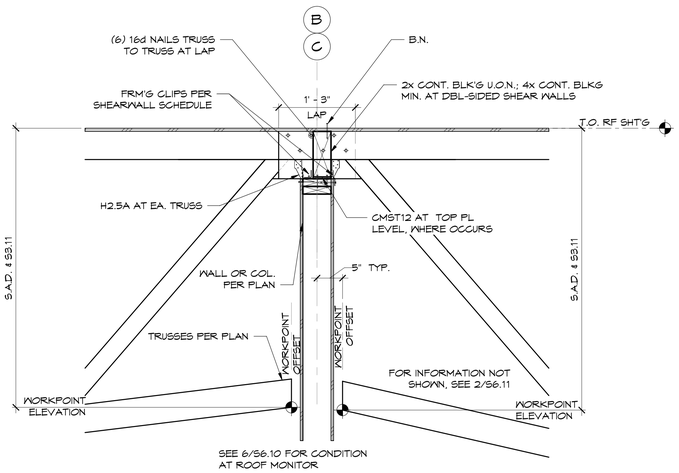

6 S6.11 INT. TRUSS SUPPORT @ WALL
1" = 1'-0"

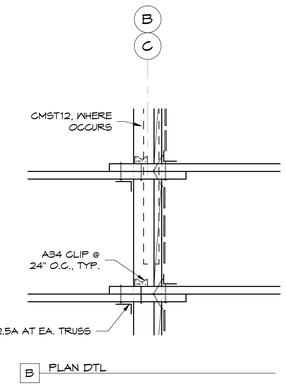

B PLAN DTL

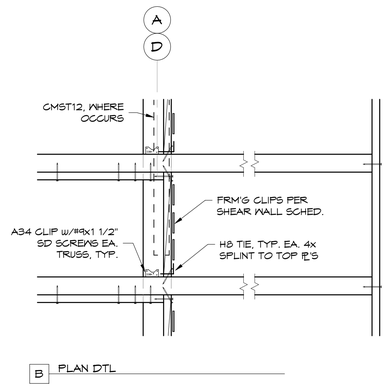

B PLAN DTL

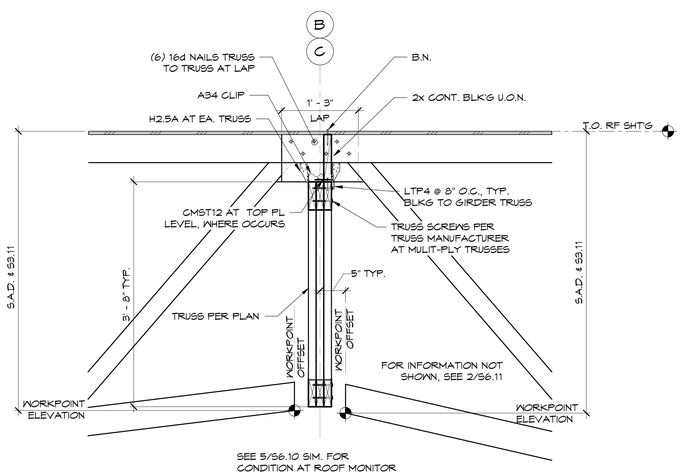

3 S6.11 INT. TRUSS SUPPORT @ GIRDER TRUSS
1" = 1'-0"

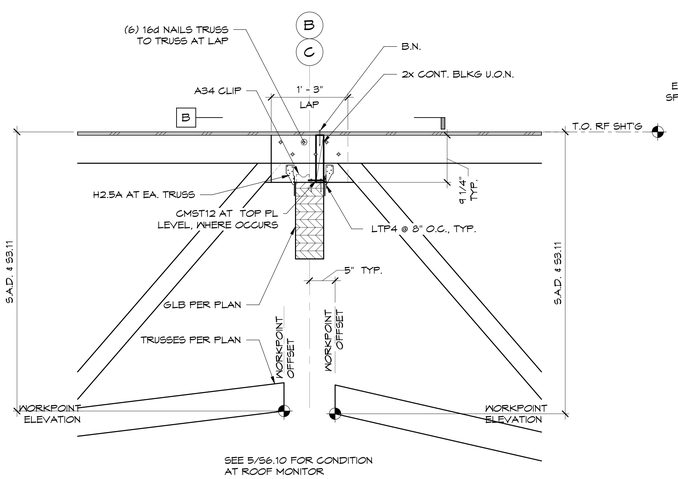

2 S6.11 INT. TRUSS SUPPORT @ BEAM
1" = 1'-0"

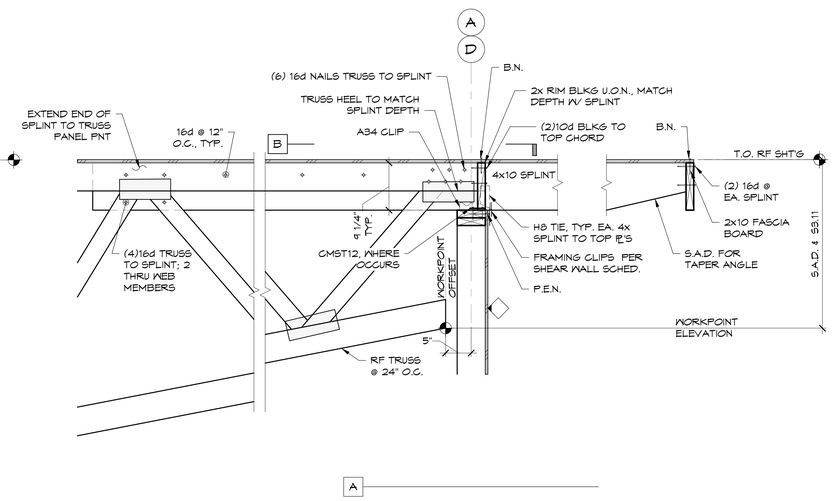

1 S6.11 SISTERED CANTILEVERED SPLINT @ WALL
1" = 1'-0"

D:\AcadTemp\Revit\20056-CSU Stanislaus-Struc-R2019_sarah.aher@marstructuraldesign.com.rvt

Division of the State Architect

APPROVED
DIV. OF THE STATE ARCHITECT
APP: 02-119316 INC:
REVIEWED FOR
SS☐ FLS☐ ACS☒
DATE: 03/24/2022

Office of the State Fire Marshal

OFFICE OF THE STATE FIRE MARSHAL
APPROVED FIRE AND PANIC ONLY
03/14/22
21-0498
Approval of this plan does not authorize or approve any omission or deviation from applicable regulations. Final approval is subject to field inspection. One set of approved plans shall be available on the project site at all times.

CSUS CHILD DEVELOPMENT CENTER

CALIFORNIA STATE UNIVERSITY, STANISLAUS
ONE UNIVERSITY CIRCLE
TURLOCK, CA 95382

ehdd.

PIER 1, BAY 2
THE EMBARCADERO
SAN FRANCISCO, CA 94111

INFO@EHDD.COM
+1 415-285-9193

Consultant

Mar
Structural Design
2332 Fifth Street, Suite D
Berkeley, CA 94710
510-991-1101

Stamp

Printing	Date
95% CONSTRUCTION DOCUMENTS	06.25.2021
PERMIT SET	08.16.2021
PERMIT SET - DSA V2	12.15.2021
PERMIT SET - SFM	12.21.2021

Revisions and Description	Date

Scale
1" = 1'-0"

Drawn by
Author

EHDD Job Number
2020,056

Sheet Title
TRUSS CONNECTION DETAILS

Sheet Number
S6.11 V3

12/9/2021 11:56:29 PM

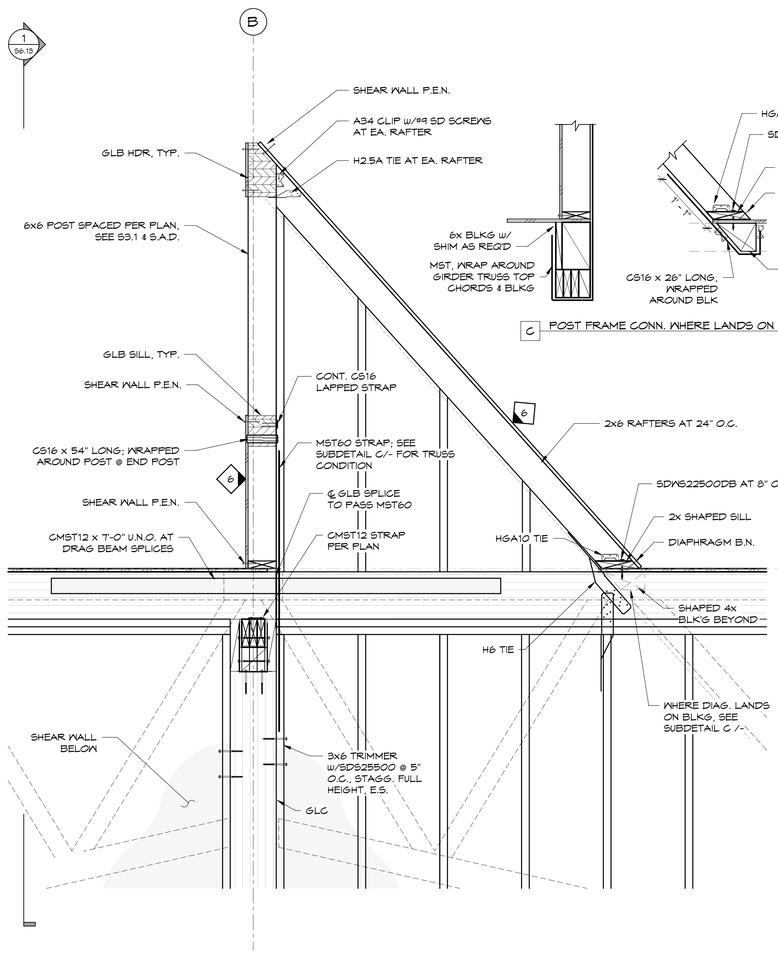

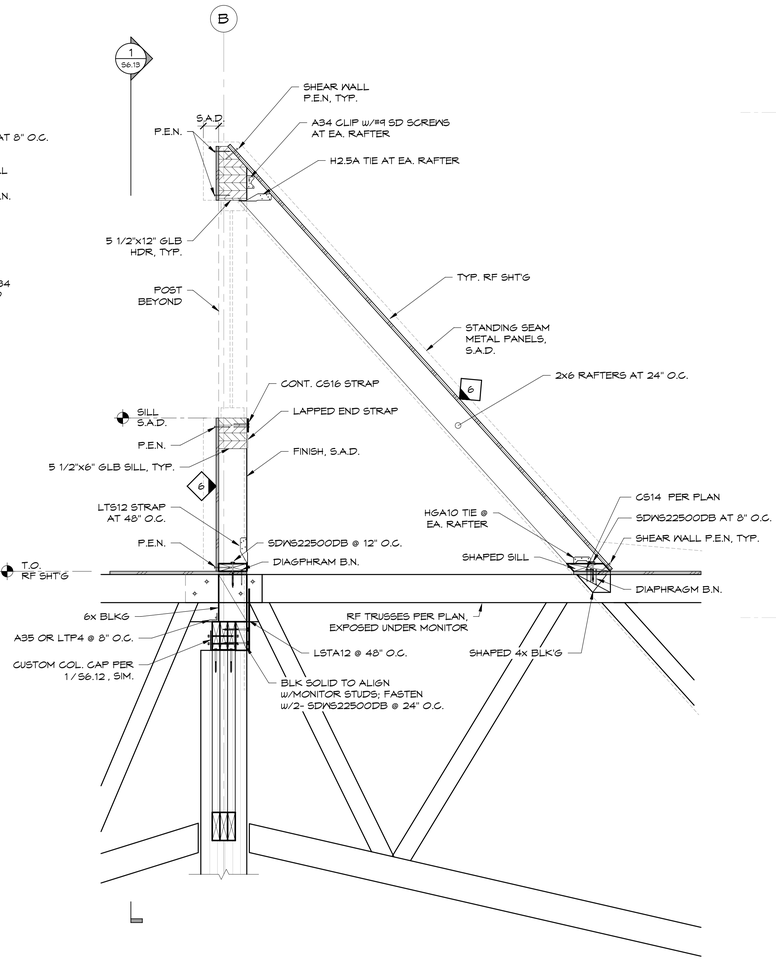

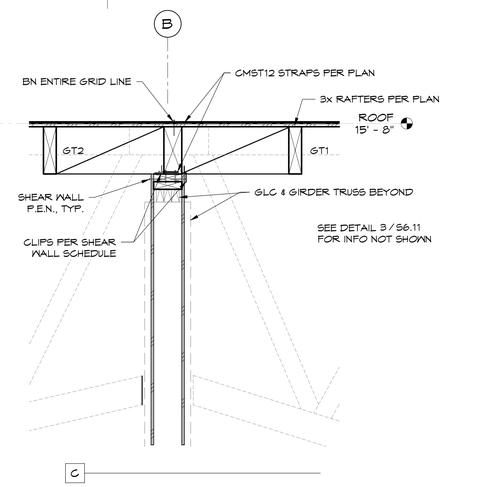

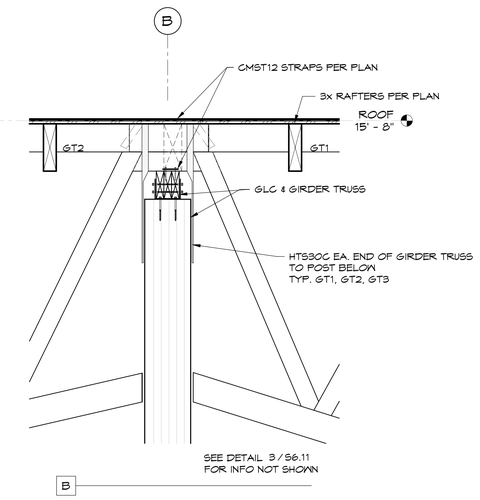

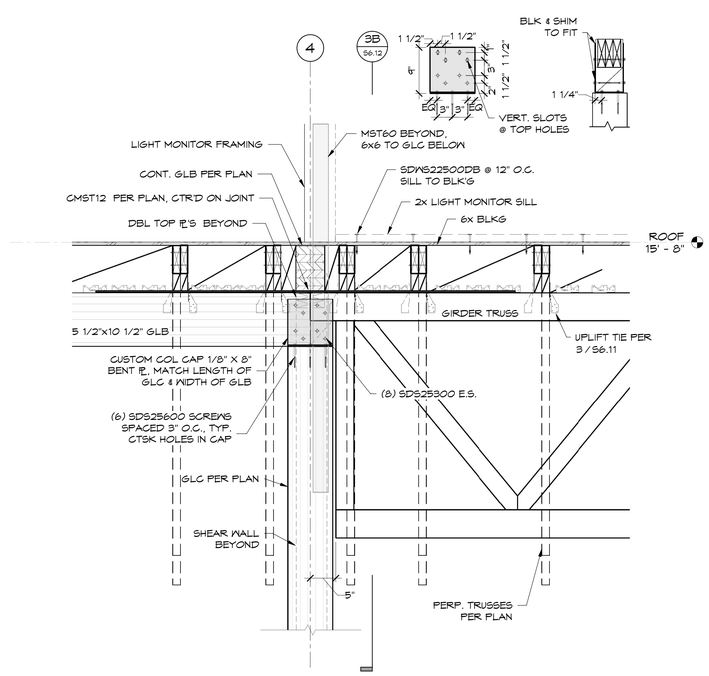

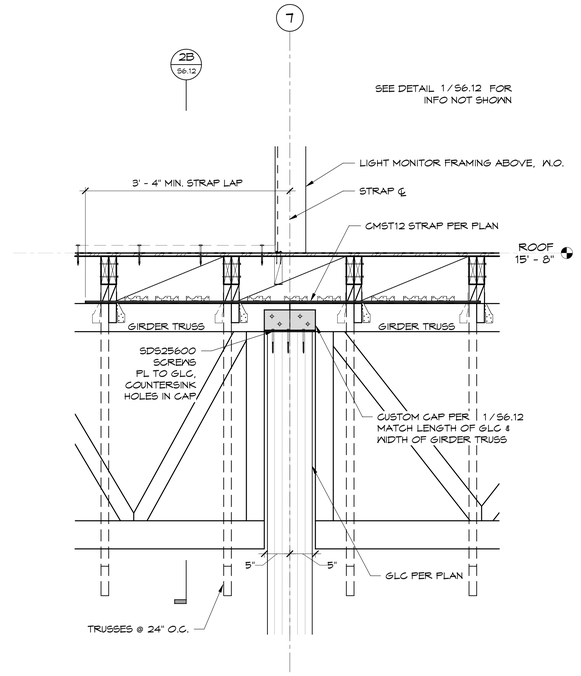

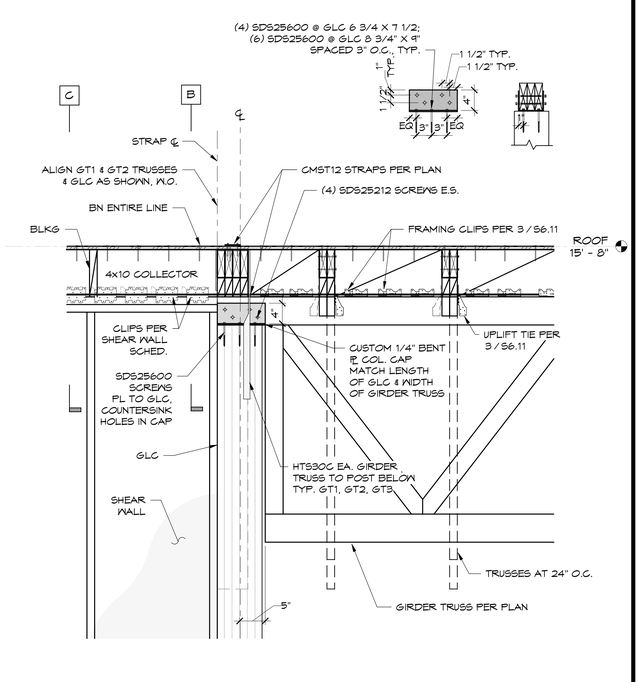

D:\Acad Temp\Revit\20056-CSU Stanislaus-Struc-R2019_sarah.aher@marstructuraldesign.com.rvt

Division of the State Architect

APPROVED
DIV. OF THE STATE ARCHITECT
APP: 02-119316 INC:
REVIEWED FOR
SS☐ FLS☐ ACS☒
DATE: 03/24/2022

Office of the State Fire Marshal

OFFICE OF THE STATE FIRE MARSHAL
APPROVED FIRE AND PANIC ONLY
03/14/22
21-0498
Approval of this plan does not authorize or approve any omission or deviation from applicable requirements. Final approval is subject to field inspection. One set of approved plans shall be available on the project site at all times.

CSUS CHILD DEVELOPMENT CENTER

CALIFORNIA STATE UNIVERSITY, STANISLAUS
ONE UNIVERSITY CIRCLE
TURLOCK, CA 95382

ehdd.

PIER 1, BAY 2
THE EMBARCADERO
SAN FRANCISCO, CA 94111

INFO@EHDD.COM
+1 415-285-9193

Consultant

Mar
Structural Design
2332 Fifth Street, Suite D
Berkeley, CA 94710
510-991-1101

Stamp

Printing	Date
95% CONSTRUCTION DOCUMENTS	06.25.2021
PERMIT SET	08.16.2021
PERMIT SET - DSA V2	12.15.2021
PERMIT SET - SFM	12.21.2021

Revisions and Description	Date

Scale
1" = 1'-0"

Drawn by
Author

EHDD Job Number
2020,056

Sheet Title
TRUSS CONNECTION & ROOF MONITOR DETAILS

Sheet Number
S6.12 V3

12/9/2021 11:56:30 PM

D:\AcadTemp\Revit\20056-CSU Stanislaus-Struc-R2019_sarah.aher@marstructuraldesign.com.rvt

Division of the State Architect

APPROVED
DIV. OF THE STATE ARCHITECT
APP: 02-119316 INC:
REVIEWED FOR
SS☐ FLS☐ ACS☑
DATE: 03/24/2022

Office of the State Fire Marshal

OFFICE OF THE STATE FIRE MARSHAL
APPROVED FIRE AND PANIC ONLY
03/14/22
21-0498
Approval of this plan does not authorize or approve any omission or deviation from applicable regulations. Final approval is subject to field inspection. One set of approved plans shall be available on the project site at all times.

CSUS CHILD DEVELOPMENT CENTER

CALIFORNIA STATE
UNIVERSITY, STANISLAUS
ONE UNIVERSITY CIRCLE
TURLOCK, CA 95382

ehdd.

PIER 1, BAY 2
THE EMBARCADERO
SAN FRANCISCO, CA 94111

INFO@EHDD.COM
+1 415-285-9193

Consultant

Mar
Structural Design
2332 Fifth Street, Suite D
Berkeley, CA 94710
510-991-1101

Stamp

Printing	Date
95% CONSTRUCTION DOCUMENTS	06.25.2021
PERMIT SET	08.16.2021
PERMIT SET - DSA V2	12.15.2021
PERMIT SET - SFM	12.21.2021

Revisions and Description	Date

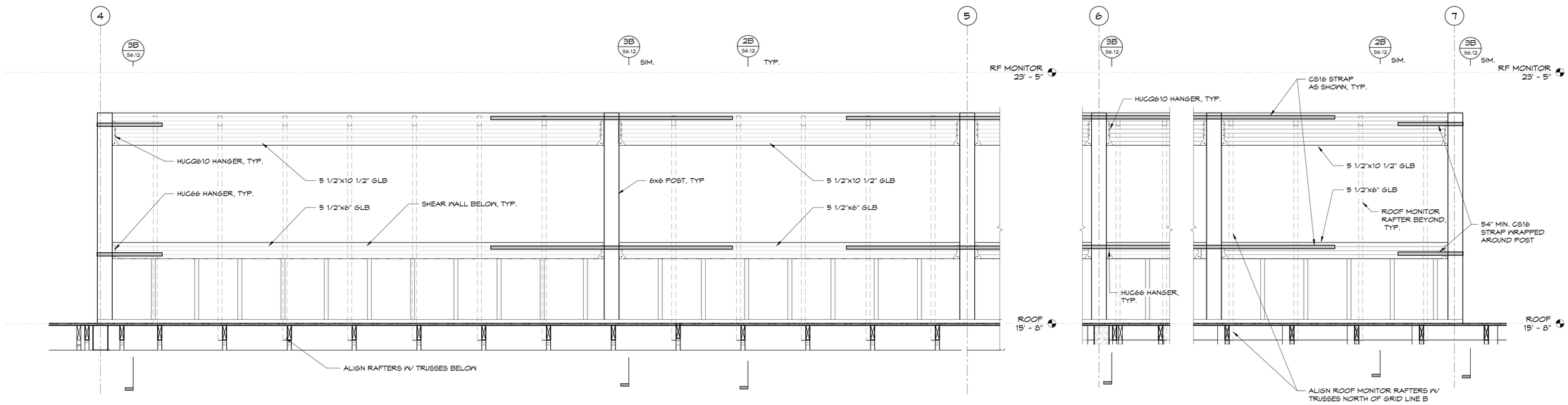

1 / S6.13 ROOF MONITOR FRAMING ELEVATION
3/4" = 1'-0"

Scale
3/4" = 1'-0"

Drawn by
Author

EHDD Job Number
2020,056

Sheet Title
ROOF MONITOR DETAILS

Sheet Number
S6.13 V3

12/9/2021 11:56:31 PM

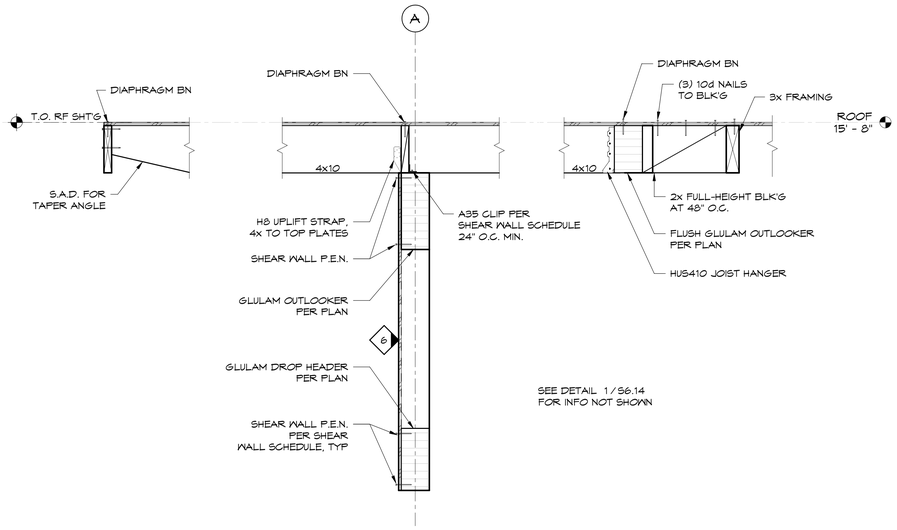

9 / S6.14 EAVE FRAMING AT SPLINT
1" = 1'-0"

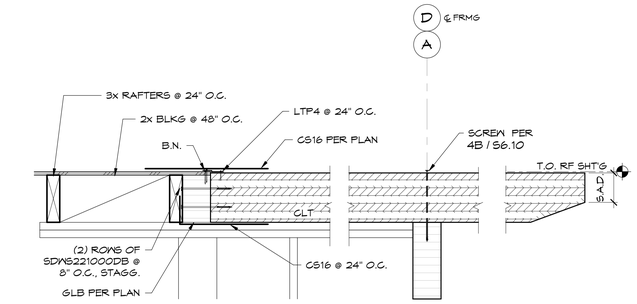

7 / S6.14 CLT BACKSPAN CONN.
1" = 1'-0"

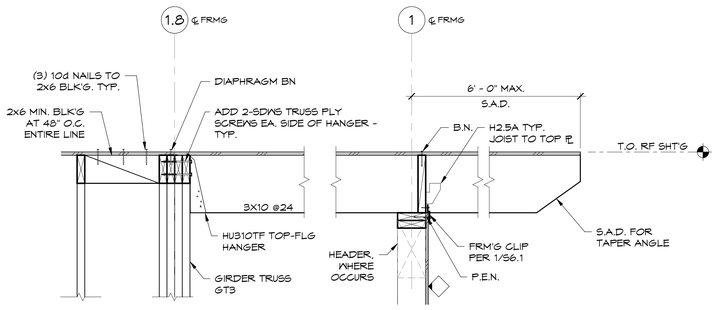

6 / S6.14 TYP. ROOF EAVE @ LINE 1
1" = 1'-0"

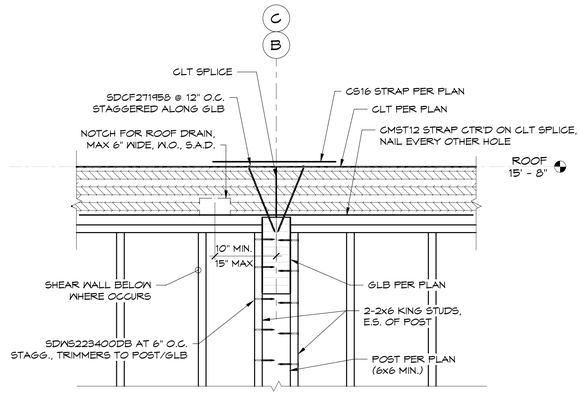

B

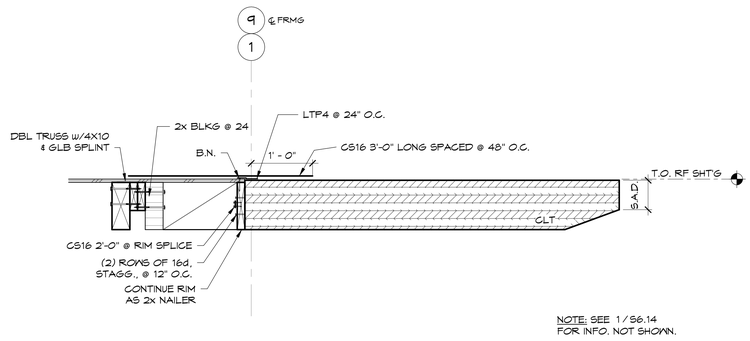

4 / S6.14 CORNER ROOF EAVE
1" = 1'-0"

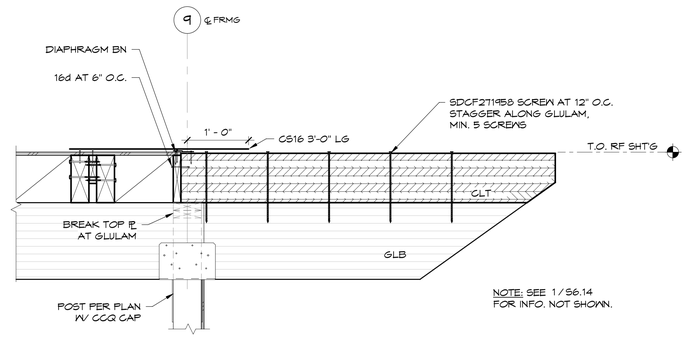

3 / S6.14 GLULAM OUTLOOKER AT EAVE
1" = 1'-0"

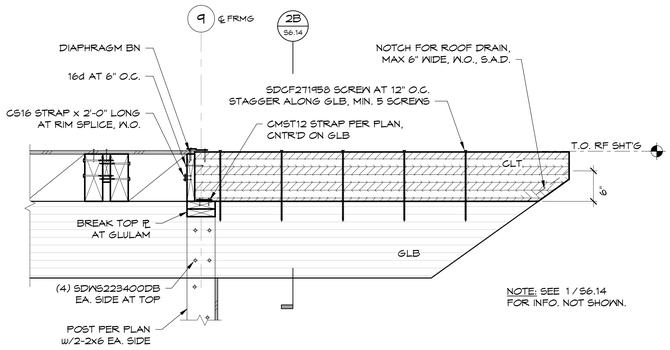

A

2 / S6.14 GLULAM OUTLOOKER AT EAVE
1" = 1'-0"

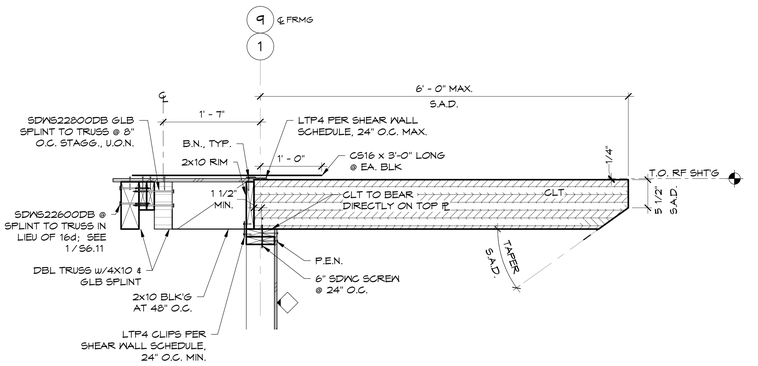

1 / S6.14 TYP. ROOF EAVE AT CLT
1" = 1'-0"

D:\AcadTemp\Revit\20056-CSU Stanislaus-Struc-R2019_sarah.aher@marstructuraldesign.com.rvt

Division of the State Architect
APPROVED
DIV. OF THE STATE ARCHITECT
APP: 02-119316 INC:
REVIEWED FOR
SS☐ FLS☐ ACS☑
DATE: 03/24/2022

Office of the State Fire Marshal

OFFICE OF THE STATE FIRE MARSHAL
APPROVED FIRE AND PANIC ONLY
03/14/22
21-0498
Approval of this plan does not authorize or approve any omission or deviation from applicable requirements. Final approval is subject to field inspection. One set of approved plans shall be available on the project site at all times.

CSUS CHILD DEVELOPMENT CENTER

CALIFORNIA STATE UNIVERSITY, STANISLAUS
ONE UNIVERSITY CIRCLE
TURLOCK, CA 95382

ehdd.

PIER 1, BAY 2
THE EMBARCADERO
SAN FRANCISCO, CA 94111

INFO@EHDD.COM
+1 415-285-9193

Consultant

Mar
Structural Design
2332 Fifth Street, Suite D
Berkeley, CA 94710
510-991-1101

Stamp

Printing	Date
95% CONSTRUCTION DOCUMENTS	06.25.2021
PERMIT SET	08.16.2021
PERMIT SET - DSA V2	12.15.2021
PERMIT SET - SFM	12.21.2021

Revisions and Description	Date

Scale
1" = 1'-0"

Drawn by
Author

EHDD Job Number
2020,056

Sheet Title
WOOD FRAMING DETAILS

Sheet Number
S6.14 V3

12/9/2021 11:56:33 PM

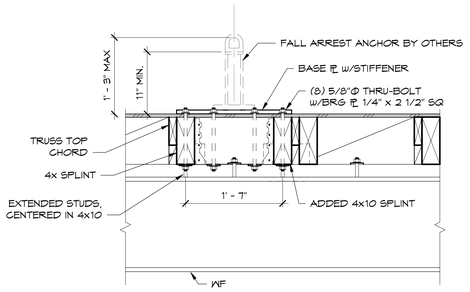

C

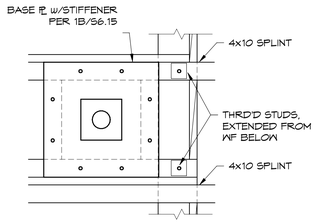

B BASE PL w/STIFFENER

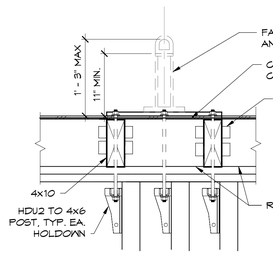

C

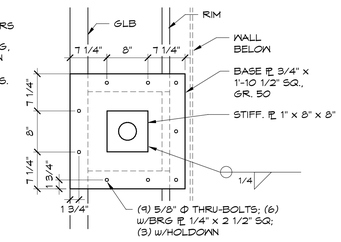

B BASE PL w/STIFFENER

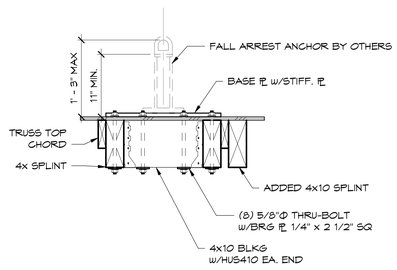

D

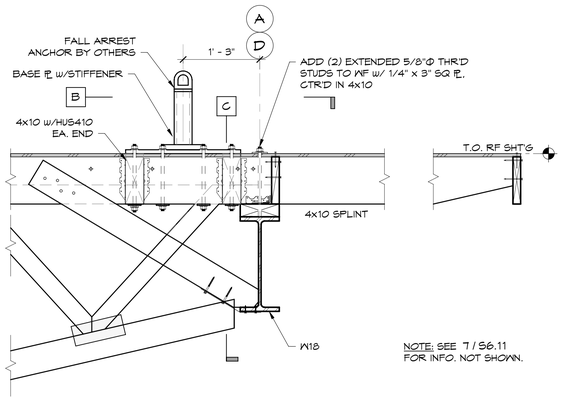

NOTE: SEE T / S6.11 FOR INFO. NOT SHOWN.

A

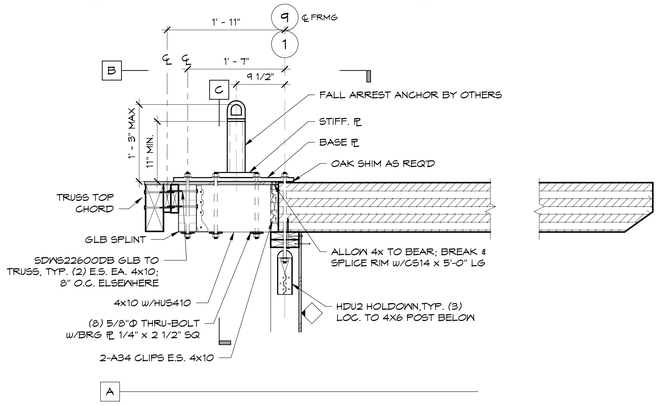

A

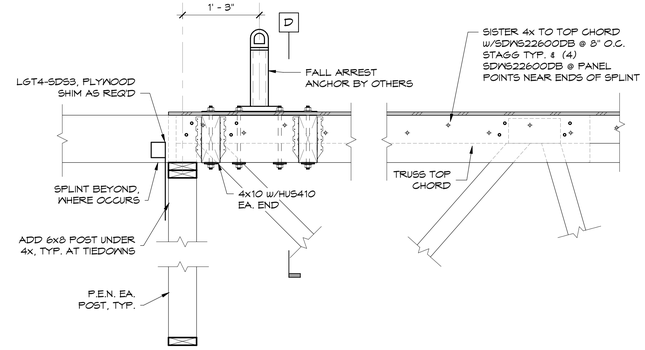

C

7 TIEBACK ANCHOR AT WF
S6.15 — 1" = 1'-0"

6 TIEBACK ANCHOR AT CLT
S6.15 — 1" = 1'-0"

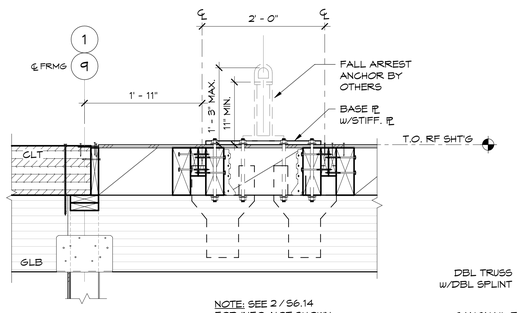

NOTE: SEE 2 / S6.14 FOR INFO. NOT SHOWN.

D

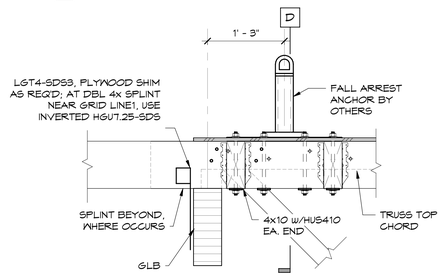

C

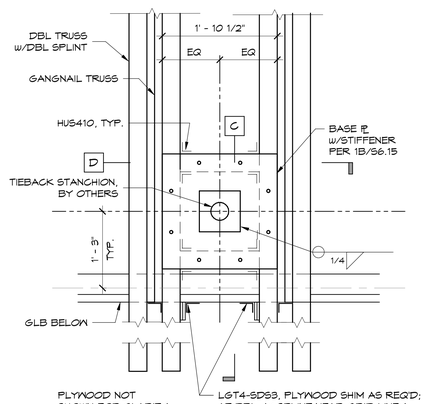

A PLAN VIEW

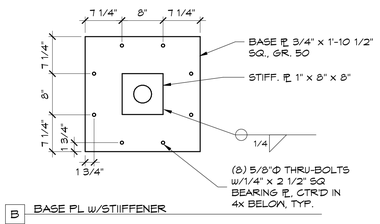

B BASE PL w/STIFFENER

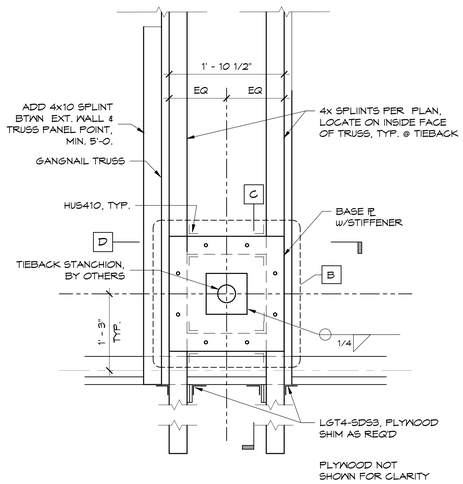

A PLAN VIEW

2 TIEBACK ANCHOR AT GLULAM
S6.15 — 1" = 1'-0"

1 TIEBACK ANCHOR
S6.15 — 1" = 1'-0"

D:\AcadTemp\Revit\20056-CSU Stanislaus-Struc-R2019_sarah.aher@marstructuraldesign.com.rvt

Division of the State Architect
APPROVED
DIV. OF THE STATE ARCHITECT
APP: 02-119316 INC:
REVIEWED FOR
SS☐ FLS☐ ACS☑
DATE: 03/24/2022

Office of the State Fire Marshal

OFFICE OF THE STATE FIRE MARSHAL
APPROVED FIRE AND PANIC ONLY
03/14/22
21-0498
Approval of this plan does not authorize or approve any omission or deviation from applicable regulations. Final approval is subject to field inspection. One set of approved plans shall be available on the project site at all times.

CSUS CHILD DEVELOPMENT CENTER

CALIFORNIA STATE UNIVERSITY, STANISLAUS
ONE UNIVERSITY CIRCLE
TURLOCK, CA 95382

ehdd.

PIER 1, BAY 2
THE EMBARCADERO
SAN FRANCISCO, CA 94111

INFO@EHDD.COM
+1 415-285-9193

Consultant

Mar
Structural Design
2332 Fifth Street, Suite D
Berkeley, CA 94710
510-991-1101

Stamp

Printing	Date
95% CONSTRUCTION DOCUMENTS	06.25.2021
PERMIT SET	08.16.2021
PERMIT SET - DSA V2	12.15.2021
PERMIT SET - SFM	12.21.2021

Revisions and Description	Date

Scale
1" = 1'-0"

Drawn by
Author

EHDD Job Number
2020,056

Sheet Title
WOOD FRAMING DETAILS

Sheet Number
S6.15 V3

12/9/2021 11:56:33 PM

D:\AcadTemp\Revit\20056-CSU Stanislaus-Struc-R2019_sarah.aher@marstructuraldesign.com.rvt

Division of the State Architect

APPROVED
DIV. OF THE STATE ARCHITECT
APP: 02-119316 INC:
REVIEWED FOR
SS☐ FLS☐ ACS☑
DATE: 03/24/2022

Office of the State Fire Marshal

OFFICE OF THE STATE FIRE MARSHAL
APPROVED FIRE AND PANIC ONLY
03/14/22
21-0498
Approval of this plan does not authorize or approve any omission or deviation from applicable regulations. Final approval is subject to field inspection. One set of approved plans shall be available on the project site at all times.

CSUS CHILD DEVELOPMENT CENTER

CALIFORNIA STATE
UNIVERSITY, STANISLAUS
ONE UNIVERSITY CIRCLE
TURLOCK, CA 95382

ehdd.

PIER 1, BAY 2
THE EMBARCADERO
SAN FRANCISCO, CA 94111

INFO@EHDD.COM
+1 415-285-9193

Consultant

Mar
Structural Design
2332 Fifth Street, Suite D
Berkeley, CA 94710
510-991-1101

Stamp

Printing	Date
95% CONSTRUCTION DOCUMENTS	06.25.2021
PERMIT SET	08.16.2021
PERMIT SET - DSA V2	12.15.2021
PERMIT SET - SFM	12.21.2021

Revisions and Description	Date

Scale
As indicated

Drawn by
Author

EHDD Job Number
2020,056

Sheet Title
WOOD FRAMING DETAILS

Sheet Number
S6.16 V3

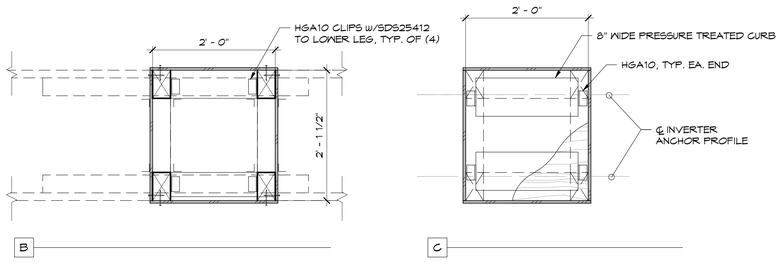

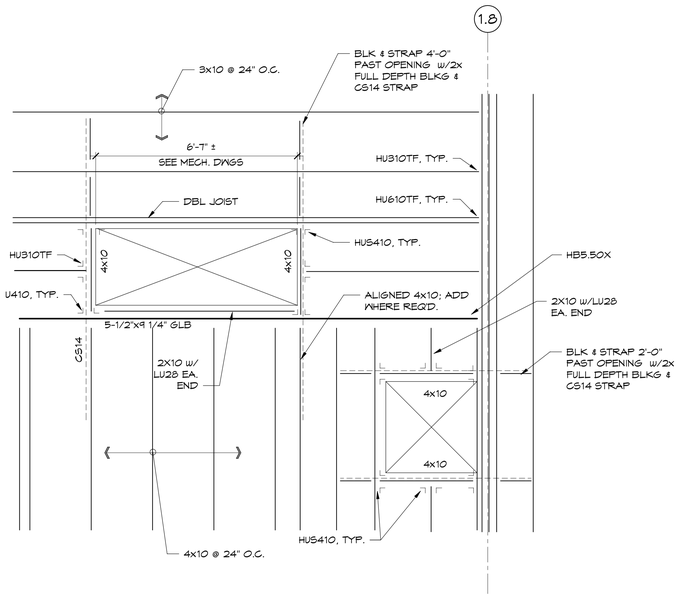

2 S6.16 ROOF HATCH FRAMING
1/2" = 1'-0"

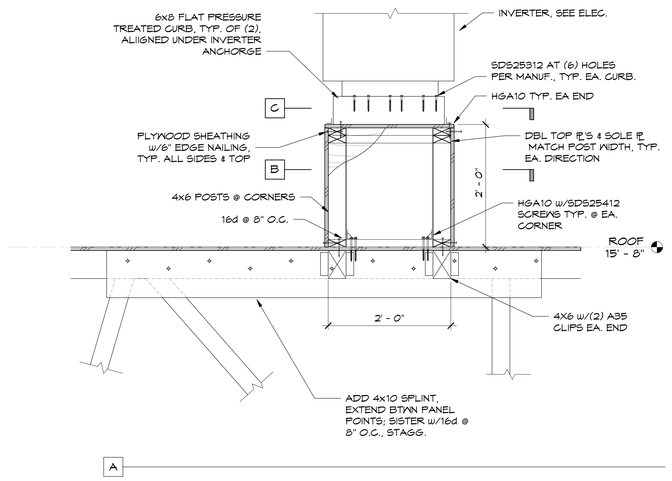

1 S6.16 INVERTER CURB
1" = 1'-0"

12/8/2021 2:01:01 PM

AIR HANDLING UNIT SCHEDULE

TAG	MANUFACTURER & MODEL #	OSA	SUPPLY FANS (2 TOTAL)					RETURN FANS (2 TOTAL)					ELECTRICAL												COOLING COIL								WEIGHT (LBS)	REMARKS
			CFM	kW (TOT)	RPM	TSP (W.C.)	ESP (W.C.)	CFM	kW (TOT)	RPM	TSP (W.C.)	ESP (W.C.)	CKT 1					CKT 2					CKT 3					TOTAL MBH	SENS. MBH	EAT (°F) DB/WB	LAT (°F) DB/WB	EWT/LWT (°F)	FLOW	FLUID PD	COIL CONN.	ROWS	FINS/ FOOT		
													VOLTS	PH	HZ	MCA	MAX FUSE	VOLTS	PH	HZ	MCA	MAX FUSE	VOLTS	PH	HZ	MCA	MAX FUSE												
AH-1	TRANE #CSAA025	4415	12610	8.97	2063	4.2"	2.0"	12610	3.68	1607	1.6"	0.5"	200/208	3	60	85.46	100.0 A	115	1	60	3.26	15.0 A	115	1	60	10.0	15.0 A	489	341	80/67	54.2/53.7	45/55	98 GPM	9.6 FT	2.5"	6	108	2785	SEE NOTE #1 - #15

NOTES:
1. PROVIDE PAD MOUNTED OUTDOOR AIR HANDLER WITH END RETURN AND TOP SUPPLY, TOP OSA, TOP RELIEF, & BACK RETURN. PROVIDE NEW 6" HOUSEKEEPING PAD. ARRANGEMENT SHALL BE: RETURN FANS, MIXING BOX/ECONOMIZER, FILTER, COOLING CHW COIL, SUPPLY FANS.
2. PROVIDE WITH MOTORIZED IMPELLER FANS WITH 0-10Vdc SPEED INPUT AND HAND/OFF/AUTO SWITCH WITH MANUAL ADJUSTMENT POTENTIOMETER.
3. ELECTRICAL TO PROVIDE 120V POWER FOR CONTROLS, 208V/3PH POWER & DISCONNECT FOR (4) FAN CIRCUITS.
4. PROVIDE WITH 2" MERV 13 FILTERS UPSTREAM OF THE COOLING COIL. AIR HANDLER CASING SHALL MEET ASHRAE 111 CLASS 6 LEAKAGE AT 8" W.C. SP WITH DEFLECTION LESS THAN L/240. FACTORY 5 YEAR PARTS AND LABOR WARRANTY.
5. PROVIDE SUPPLY AIR SMOKE DETECTOR SHUTOFF IN COMPLIANCE WITH 2019 CMC 608.0.
6. PROVIDE ECONOMIZING CONTROLS TO MEET 2019 CALIFORNIA ENERGY CODE REQUIREMENTS (SEE SECTIONS 120.2(i) AND 140.4(e)).
7. PROVIDE THERMAL BREAK INTERNAL WITH NO THROUGH METAL, SOUND DATA IN ACCORDANCE WITH AHRI 260.
8. CASING SHALL LEAK LESS THAN ASHRAE 111 CLASS 6 LEVELS AT 8" W.C. SP WITH DEFLECTION LESS THAN L/240
9. MARINE LED LIGHTS AT EACH FAN SECTION AND CONVENIENCE OUTLET (POWERED SEPARATELY).
10. PROVIDE WITH MANUFACTURER FIVE YEAR PARTS AND LABOR WARRANTY.
11. PROVIDE WITH SHATTERPROOF, THERMAL DUAL-PANE VIEWING WINDOWS AT FAN ACCESS DOORS. PROVIDE VIEWING WINDOW FOR EACH OF SUPPLY AND RETURN FANS.
12. PROVIDE WITH STAINLESS STEEL DRAIN PAN.
13. SEE 1/M5.01 FOR CONTROL DIAGRAM.
14. PROVIDE WITH SAFETY SWITCH ON CABINET DOORS. SUPPLY AND RETURN FANS SHALL SHUT OFF WHEN THEIR RESPECTIVE ACCESS DOORS ARE OPEN.
15. PROVIDE FACTORY BLANK-OFF PLATE (LOOSE) TO BE MANUALLY INSTALLED IN CASE OF FAN FAILURE TO AVOID AIR RECIRCULATION.

PUMP SCHEDULE

TAG	MANUFACTURER & MODEL #	DESCRIPTION	GPM	HEAD (FT)	MOTOR FRAME	IMPELLER DIA (IN)	SUCTION DIA (IN)	DISCH. DIA (IN)	MOTOR HP	DUTY BHP	MOTOR RPM	ELECTRICAL	WEIGHT (LBS)	REMARKS
HHWP-1	B&G E-1531 1.25AD	BASE MOUNTED, END SUCTION, CENTRIFUGAL PUMP	38.5	30	143	6.25	1.25"	1.25"	1	0.41	1750	208V/3□	105	SEE NOTE #1 - #4
HHWP-2	B&G E-1531 1.25AD	BASE MOUNTED, END SUCTION, CENTRIFUGAL PUMP	38.5	30	143	6.25	1.25"	1.25"	1	0.41	1750	208V/3□	105	SEE NOTE #1 - #4
CHWP-1	B&G E-1510 2AD-ES	BASE MOUNTED, END SUCTION, CENTRIFUGAL PUMP	94	30	145T	8.875	2	2"	2	0.8	1200	208V/3□	220	SEE NOTE #1 - #4
CHWP-2	B&G E-1510 2AD-ES	BASE MOUNTED, END SUCTION, CENTRIFUGAL PUMP	94	30	145T	8.875	2	2"	2	0.8	1200	208V/3□	220	SEE NOTE #1 - #4

NOTES:
1. PROVIDE PUMPS WITH BASE FRAME, OSHA COUPLING GUARD, CENTER DROP OUT SPACER COUPLING, STANDARD SEAL, MOUNT TO CONCRETE PAD.
2. PROVIDE VFD (ABB ACH 580 OR EQUAL) WITH COMMUNICATION TO BMS, NEMA 3R ENCLOSURE, DISCONNECT BY ELECTRICAL.
3. PROVIDE WITH SUCTION DIFFUSER.
4. PROVIDE WITH SHAFT GROUNDING DEVICE.

VAV BOX SCHEDULE

TAG	NO.	MANUFACTURER	INLET SIZE (IN.)	MIN CFM	MAX HEATING CFM	MAX COOLING CFM	HEATING (MBH)	HEATING E.A.T (°F)	HEATING L.A.T. (°F)	APD (IN WC)	ROWS	E.W.T (°F)	L.W.T. (°F)	WPD (FT)	GPM	Cv	VALVE	OP WEIGHT (LB)	REMARKS
VAV	100	TRANE #VCWF	10	160	400	800	12.5	55	127	0.30	2	160	130	0.25'	2.0	0.89	3-WAY	40	NOTES #1 - #5
VAV	101	TRANE #VCWF	6	60	150	300	2.0	55	86	0.10	2	160	130	0.10'	0.5	0.22	2-WAY	27	NOTES #1 - #5
VAV	102	TRANE #VCWF	10	160	390	780	11.7	55	123	0.30	2	160	130	0.25'	2.0	0.89	2-WAY	40	NOTES #1 - #5
VAV	103	TRANE #VCWF	8	85	210	425	6.6	55	127	0.20	2	160	130	0.25'	2.0	0.89	2-WAY	30	NOTES #1 - #5
VAV	104	TRANE #VCWF	6	45	110	225	1.6	55	87	0.10	2	160	130	0.10'	0.5	0.22	2-WAY	27	NOTES #1 - #5
VAV	105	TRANE #VCWF	8	90	225	450	4.5	55	101	0.20	2	160	130	0.25'	2.0	0.89	2-WAY	30	NOTES #1 - #5
VAV	106	TRANE #VCWF	10	180	445	890	11.3	55	113	0.30	2	160	130	0.25'	2.0	0.89	2-WAY	40	NOTES #1 - #5
VAV	107	TRANE #VCWF	6	45	110	225	1.8	55	92	0.10	2	160	130	0.10'	0.5	0.22	2-WAY	27	NOTES #1 - #5
VAV	108	TRANE #VCWF	6	35	80	160	1.8	55	103	0.10	2	160	130	0.10'	0.5	0.22	2-WAY	27	NOTES #1 - #5
VAV	109	TRANE #VCWF	8	70	175	350	6.2	55	137	0.20	2	160	130	0.25'	0.5	0.22	2-WAY	30	NOTES #1 - #5
VAV	110	TRANE #VCWF	10	135	335	675	10.8	55	129	0.30	2	160	130	0.25'	2.0	0.89	2-WAY	40	NOTES #1 - #5
VAV	111	TRANE #VCWF	8	85	210	425	2.8	55	85	0.20	2	160	130	0.25'	2.0	0.89	2-WAY	30	NOTES #1 - #5
VAV	112	TRANE #VCWF	10	155	385	775	11.7	55	125	0.30	2	160	130	0.25'	2.0	0.89	2-WAY	40	NOTES #1 - #5
VAV	113	TRANE #VCWF	6	35	85	175	2.5	55	120	0.10	2	160	130	0.10'	0.5	0.22	2-WAY	27	NOTES #1 - #5
VAV	114	TRANE #VCWF	10	130	325	650	6.9	55	104	0.30	2	160	130	0.25'	2.0	0.89	2-WAY	40	NOTES #1 - #5
VAV	115	TRANE #VCWF	8	95	235	470	3.8	55	92	0.20	2	160	130	0.25'	2.0	0.89	2-WAY	30	NOTES #1 - #5
VAV	116	TRANE #VCWF	10	120	300	600	8.5	55	121	0.30	2	160	130	0.25'	2.0	0.89	2-WAY	40	NOTES #1 - #5
VAV	117	TRANE #VCWF	6	80	200	400	7.4	55	140	0.10	2	160	130	0.10'	2.0	0.89	2-WAY	27	NOTES #1 - #5
VAV	118	TRANE #VCWF	14	255	635	1275	14.0	55	106	0.30	2	160	130	2.0'	5.0	2.24	2-WAY	62	NOTES #1 - #5
VAV	119	TRANE #VCWF	12	190	465	930	14.8	55	127	0.30	2	160	130	0.7'	2.0	0.89	2-WAY	51	NOTES #1 - #5
VAV	120	TRANE #VCWF	8	60	150	300	2.0	55	86	0.20	2	160	130	0.25'	0.5	0.22	2-WAY	30	NOTES #1 - #5
VAV	121	TRANE #VCWF	12	180	450	900	14.1	55	128	0.20	2	160	130	0.25'	2.0	1.24	3-WAY	30	NOTES #1 - #5
VAV	122	TRANE #VCWF	8	90	215	430	2.9	55	84	0.20	2	160	130	0.25'	2.0	0.89	2-WAY	30	NOTES #1 - #5

NOTES:
1. TRANE SINGLE DUCT CAV BOX WITH HHW REHEAT COIL, 1" DOUBLE-WALL INSULATION, FIELD INSTALLED CONTROLS BY CONTROLS VENDOR.
2. CONNECT TO DDC SYSTEM 24V CONTROL POWER.
3. TERMINAL BOX SHALL BE DUCT SUPPORTED (NOT TO EXCEED 75 LBS).
4. PROVIDE COIL CONNECTION PIPING, INCLUDING 2-WAY OR 3-WAY MODULATING VALVE, STRAINER, BRAIDED HOSE CONNECTIONS, SHUTOFF VALVES, CIRCUIT SETTER, AND TEST PORTS. SEE 1/M5.02 AND 2/M5.02.
5. PROVIDE MINIMUM (2) DUCT DIAMETERS STRAIGHT DUCT LEADING TO INLET. CONCENTRIC TRANSITIONS WITH MAX 20 DEGREE TAPER ANGLE ARE ACCEPTABLE AT INLET.

SPLIT SYSTEM INDOOR FAN COIL SCHEDULE

TAG	MANUFACTURER & MODEL #	QTY.	DESCRIPTION	COOLING BTU/H	HEATING (47°F) BTU/H	CFM (HI)	ELECTRICAL				RL/RS SIZE	OP. WEIGHT	REMARKS
							VOLT	HZ	PH	MCA			
FC-1	MITSUBISHI #PKA-A24KA4	1	WALL MOUNT	24,000	26,000	775	208	60	1	1	3/8" 5/8"	46 LBS	SEE NOTE #1, #2

NOTES:
1. PROVIDE WITH FACTORY HARD WIRED THERMOSTAT. T-STAT TO BE ACCESSIBLE WITH TOP MOUNTED AT 48" AFF. SEE FLOOR PLANS. ELECTRICAL SUPPLY IS FED FROM OUTDOOR UNIT THROUGH FIELD-SUPPLIED WIRING PER MANUFACTURER'S SPECIFICATIONS. FAN COIL TO BE MOUNTED ABOVE THE HEIGHT OF THE THERMOSTAT.
2. PROVIDE WITH CONDENSATE PUMP.

SPLIT SYSTEM OUTDOOR CONDENSING UNIT SCHEDULE

TAG	MANUFACTURER & MODEL	QTY.	DESCRIPTION	NOM. TONS	COOLING BTU/H	HEATING (47°F) BTU/H	ELECTRICAL					SEER	OP. WEIGHT	REMARKS
							VOLT	HZ	PH	MCA	MOCP			
CU-1	MITSUBISHI #PUZ-A24NHA4	1	OUTDOOR, ROOF	2.0	24,000	26,000	208	60	1	18	30	17.0	163 LBS	SEE NOTE #1, #2

NOTES:
1. REFRIGERANT TYPE R-410A.
2. DISCONNECT BY ELECTRICAL

EXHAUST FAN SCHEDULE

TAG	MANUFACTURER & MODEL #	DESCRIPTION	CFM	FAN RPM	S.P. (IN W.C.)	MOTOR RPM	MOTOR HP	ELECTRICAL		INLET NOISE	OP. WT. (LBS)	REMARKS
								VOLTS	PH			
EF-1	COOK #100C15DM	DOWNBLAST CENTRIFUGAL DIRECT DRIVE FAN	300	1325	0.5"	1550	1/8	115	1	55 dBA	52	SEE NOTE #1, #2
EF-2	COOK #120C15D	DOWNBLAST CENTRIFUGAL DIRECT DRIVE FAN	1000	1250	0.5"	1550	1/4	115	1	57 dBA	61	SEE NOTE #1, #2
EF-3	COOK #135C15D	DOWNBLAST CENTRIFUGAL DIRECT DRIVE FAN	1375	1125	0.5"	1550	1/2	115	1	57 dBA	72	SEE NOTE #1, #2
EF-4	COOK #100C15DM	DOWNBLAST CENTRIFUGAL DIRECT DRIVE FAN	210	1220	0.5"	1550	1/8	115	1	51 dBA	53	SEE NOTE #1, #2
EF-5	COOK #100C15DM	DOWNBLAST CENTRIFUGAL DIRECT DRIVE FAN	200	1210	0.5"	1550	1/8	115	1	51 dBA	53	SEE NOTE #1, #2

NOTES:
1. PROVIDE WITH BACKDRAFT DAMPER, FAN SPEED CONTROL, BIRDSCREEN MANUFACTURER'S AND ROOF CURB.
2. DISCONNECT BY ELECTRICAL

GRAVITY VENTILATOR SCHEDULE

TAG	MANUFACTURER & MODEL #	DESCRIPTION	CFM	S.P. (IN W.C.)	FACE VELOCITY (FPM)	INLET NOISE	OP. WT. (LBS)	REMARKS
GV-1	COOK #30X78GR	GRAVITY ROOF VENTILATOR INTAKE	12,000	0.1"	738	55 dBA	287	SEE NOTE #1, #2

NOTES:
1. PROVIDE WITH BACKDRAFT DAMPER, COOK #BD 29.75X77.75.
2. PROVIDE WITH 18 GAUGE, INSULATED, GALVANIZED STEEL, CANTED ROOF CURB, COOK #RCG 34X82

FLOW METER SCHEDULE

TAG	MANUFACTURER & MODEL #	DESCRIPTION	REMARKS
FM-1	ONICON #3500	INSERTION ELECTROMAGNETIC FLOW METER	SEE NOTE #1, #2

NOTES:
1. WETTED COMPONENST TO BE STAINLESS STEEL, RATED TO 400 PSI AND 200F, 1" HOT TAP FITTING, 1% ACCURACY AT FLOW RATES FROM 2.0 - 20 FT/S.
2. CALIBRATE AND INSTALL PER MANUFACTURER'S INSTRUCTIONS.

MECHANICAL GENERAL NOTES

1. SCOPE:
A NEW COMPLETE HVAC SYSTEM, INCLUDING MECHANICAL EQUIPMENT & DUCTWORK AS GENERALLY DELINEATED ON THE DRAWINGS. EQUIPMENT SHALL COMPLY WITH TITLE 24 CALIFORNIA CODE OF REGULATIONS.
2. CODES:
ALL WORK MATERIAL AND EQUIPMENT SHALL BE FURNISHED AND INSTALLED IN COMPLIANCE WITH THE FOLLOWING CODES AS ADOPTED AND AMENDED BY THE INSPECTING AUTHORITY HAVING JURISDICTION. NOTHING IN THESE PLANS SHALL BE CONSTRUED TO PERMIT THE INSTALLATION OF WORK, MATERIAL OR EQUIPMENT NOT CONFORMING TO THESE OR OTHER CODES APPLICABLE TO THIS PROJECT:
   A. 2019 CALIFORNIA ADMINISTRATIVE CODE (CAC) PART 1, TITLE 24, CALIFORNIA CODE OF REGULATIONS (CCR)
   B. 2019 CALIFORNIA BUILDING CODE (CBC) PART 2, TITLE 24, CCR BASED ON THE 2018 INTERNATIONAL BUILDING CODE (IBC)
   C. 2019 CALIFORNIA ELECTRICAL CODE (CEC) PART 3, TITLE 24, CCR BASED ON THE 2017 NATIONAL ELECTRICAL CODE (NEC)
   D. 2019 CALIFORNIA MECHANICAL CODE (CMC) PART 4, TITLE 24, CCR BASED ON THE 2018 UNIFORM MECHANICAL CODE (UMC)
   E. 2019 CALIFORNIA PLUMBING CODE (CPC) PART 5, TITLE 24, CCR BASED ON THE 2018 UNIFORM PLUMBING CODE (UPC)
   F. 2019 CALIFORNIA ENERGY CODE (CEC) PART 6, TITLE 24 CCR.
   G. 2019 CALIFORNIA FIRE CODE (CFC) PART 9, TITLE 24, CCR BASED ON THE 2018 INTERNATIONAL FIRE CODE (IFC)
   H. 2019 CALIFORNIA GREEN BUILDING STANDARDS (CGBSC) PART 11, TITLE 24, CCR
3. WORKMANSHIP:
ALL WORKMANSHIP SHALL BE DONE IN A NEAT AND ORDERLY MANNER ACCORDING TO THE BEST TRADE PRACTICE BY THOSE SKILLED IN THE PARTICULAR TRADE. EQUIPMENT, DUCTS, GRILLES, ETC., SHALL BE PLUMB, LEVEL, SQUARE OR CENTERED ETC., TO GIVE A NEAT AND PLEASING APPEARANCE. ALL EQUIPMENT SHALL BE INSTALLED IN STRICT COMPLIANCE WITH MANUFACTURER'S RECOMMENDATIONS.
4. AVAILABLE POWER:
THE MECHANICAL CONTRACTOR SHALL CONFIRM ALL SYSTEMS VOLTAGES BEFORE BIDDING OR ORDERING EQUIPMENT, AND SHALL ALLOW FOR BUCK & BOOST TRANSFORMERS IF REQUIRED.
5. AIR BALANCE:
THE AIR DISTRIBUTION SYSTEM SHALL BE BALANCED TO DELIVER SPECIFIED AIR QUANTITIES FOLLOWING THE PROCEDURES OF THE LATEST EDITION OF THE SMACNA PUBLICATION PROCEDURAL STANDARDS FOR TESTING ADJUSTING & BALANCING OF ENVIRONMENTAL SYSTEMS. CONTRACTOR SHALL PROVIDE ACCESSIBLE & ADJUSTABLE VOLUME DAMPERS AS REQUIRED TO BALANCE THE SYSTEMS AND MAINTAIN A NOISE CRITERIA LEVEL NOT TO EXCEED 30.
THE AIR BALANCE TECHNICIAN SHALL BE RESPONSIBLE TO MODIFY ALL SUPPLY, RETURN, AND EXHAUST FAN SHEAVES & VFD OUTPUT FREQUENCY LIMITS AS APPLICABLE SUCH THAT THE DESIGN AIR FLOWS ARE MET. ALL SUPPLY FANS CONTROLLED FOR FILTER LOADING SHALL SIMILARLY BE MODIFIED TO ENSURE THE FULL RANGE OF MOTOR POWER IS AVAILABLE TO THE CONTROL SYSTEM. RATED MAXIMUM FAN SPEED SHALL NOT BE EXCEEDED.
6. PERMITS AND UTILITY SERVICE FEES:
CONTRACTOR TO ARRANGE AND PAY FOR ALL PERMITS, INSPECTIONS AND SERVICE CHARGES REQUIRED IN THE INSTALLATION OF THE WORK.
7. EXISTING INFORMATION:
LOCATION, SIZE, MATERIAL, ETC. OF EXISTING SYSTEMS, ETC., IS PROVIDED FROM SOURCES DEEMED TO BE RELIABLE BUT IS NOT GUARANTEED. CONTRACTOR SHALL FIELD VERIFY ALL DATA BEFORE PROCEEDING WITH ANY WORK. NO EXTRA COST WILL BE ALLOWED FOR CONDITIONS NOT AS SHOWN.
8. ACCURACY:
PLANS ARE DIAGRAMMATIC. CONTRACTOR SHALL CONFIRM ALL DIMENSIONS AND LOCATIONS OF AC UNITS, EXHAUST FANS, WALLS, PARTITIONS ETC., AGAINST ARCHITECTURAL AND STRUCTURAL DESIGN PLANS FOR LOCATION CONSISTENCY & ACCURACY PRIOR TO COMMENCING WITH ANY WORK.
9. PAINTING:
PAINT ALL VISIBLE INTERIOR PORTIONS OF TERMINAL DEVICES & CANS WITH FLAT BLACK ENAMEL PAINT.
10. SIZES:
DUCTWORK SIZES ON PLANS ARE INSIDE NET FREE AREA.
11. MECHANICAL EQUIPMENT:
ALL EQUIPMENT SHALL BE LISTED BY AN APPROVED TESTING AGENCY AND INSTALLED IN ACCORDANCE WITH ITS INSTALLATION INSTRUCTIONS AND LISTING.

MECHANICAL LEGEND

DESCRIPTION	SYMBOL
SUPPLY AIR DUCT SECTION	SA
RETURN AIR DUCT SECTION	RA
DUCT SIZE NET INSIDE DIMENSION	12 x 8 / 12 x 8
EXHAUST AIR DUCT SECTION	EA
SPLITTER DAMPER W/ LOCKING QUADRANT	
FLEXIBLE DUCT CONNECTION	
DUCT DROP/RISE	
DOOR LOUVER	
AIR EXTRACTOR	
ACCESS DOOR - A.D.	AD
VOLUME DAMPER W/ LOCKING QUADRANT	VD
AUTO MOTORIZED CONTROLLED DAMPER	MD
FIRE DAMPER / CEILING FIRE DAMPER	FD / FD/CD
MOTORIZED FIRE / SMOKE DAMPER	FSD

1ST LETTER - LOCATION: C-CEILING, W-WALL, F-FLOOR
2ND LETTER - SERVICE: S-SUPPLY, R-RETURN, E-EXHAUST
NUMBER: 5-SEE SCH FOR TYPE
CS-5: 300 CFM 12x12
CS-6: 300 CFM 12x12
WS-1: 300 CFM 14x8
300 CFM = CUBIC FEET PER MINUTE
12 X 12 = NECK SIZE

SMOKE DETECTOR	SD
DUCT WITH ACOUSTICAL LINING	
TO BE REMOVED	
THERMOSTAT	T
CONDENSATE DRAIN LINE	CD
2-WAY CONTROL VALVE	
3-WAY CONTROL VALVE	
BALANCE VALVE	
BUTTERFLY VALVE	
CHECK VALVE	
FLEXIBLE COUPLING	
GLOBE VALVE	
MANUAL AIR VENT - MAV	
PETES PLUG	
PRESSURE GAUGE	P
PRESSURE REDUCING VALVE - PRV	
REDUCER	
SHUT OFF COCK	
SHUT OFF VALVE	
STRAINER	
THERMOMETER	T
UNION	
CHILLED WATER SUPPLY	CHWS
CHILLED WATER RETURN	CHWR
HEATING HOT WATER SUPPLY	HHWS
HEATING HOT WATER RETURN	HHWR
ABOVE FINISHED FLOOR	A.F.F.
ANALOG INPUT / ANALOG OUTPUT	AI / AO
AUTOMATIC AIR VENT	AAV
CUBIC FEET PER HOUR (1000 BTU)	CFH
CUBIC FEET PER MINUTE	CFM
DIFFERENTIAL PRESSURE TRANSDUCER	DPT
DIGITAL INPUT / DIGITAL OUTPUT	DI / DO
EXISTING	(E)
FLOW SWITCH	FS
GALLONS PER MINUTE	GPM
NEW	(N)
OCCUPANCY SENSOR	OS
OUTSIDE AIR	OSA
POINT OF CONNECTION	P.O.C.
REFRIGERANT LIQUID / REFRIGERANT SUCTION	RL / RS
SQUARE FEET	SF
TEMPERATURE CONTROL PANEL	TCP
THOUSANDS OF BTU'S PER HOUR	MBH

AIR DISTRIBUTION DEVICE SCHEDULE

TAG	MANUFACTURER & MODEL NO.	FRAME TYPE	BLOW PATTERN	OBD	REMARKS
CS-1	PRICE #AMD	LAY-IN	SEE PLANS	NO	LOUVER FACE, SEE NOTES #2, #3, #4
CS-2	PRICE #SDS150	LINEAR SLOT	N/A	NO	SEE NOTES #5, #8
CS-3	PRICE #AMD	SURFACE	SEE PLANS	YES	LOUVER FACE, SEE NOTES #2, #3, #4
CS-4	PRICE #AMD	SURFACE	SEE PLANS	NO	LOUVER FACE, SEE NOTES #2, #3, #4, #8
CS-5	PRICE #AMD	SURFACE	SEE PLANS	NO	LOUVER FACE, SEE NOTES #2, #3, #4
WS-1	PRICE #SDS150	LINEAR SLOT	N/A	NO	SEE NOTES #5, #8
WS-2	PRICE #520	SURFACE	N/A	NO	LOUVER FACE, SEE NOTES #2, #3, #4
WS-3	PRICE #520	SURFACE	N/A	NO	LOUVER FACE, SEE NOTES #1, #2, #3, #7
CR-1	PRICE #80	LAY-IN	N/A	NO	EGG CRATE, SEE NOTES #2, #3, #4
CR-2	PRICE #SDR150	LINEAR SLOT	N/A	NO	SEE NOTES #6, #8
CR-3	PRICE #80	SURFACE	N/A	NO	EGG CRATE, SEE NOTES #2, #3, #4, #8
WR-1	PRICE #SDR150	LINEAR SLOT	N/A	NO	SEE NOTES #6, #8
CE-1	PRICE #80	LAY-IN	N/A	NO	EGG CRATE, SEE NOTES #2, #3, #4
CE-2	PRICE #80	SURFACE	N/A	YES	EGG CRATE, SEE NOTES #2, #3, #4
CE-3	PRICE #80	SURFACE	N/A	NO	EGG CRATE, SEE NOTES #2, #3, #4, #8
WE-1	PRICE #80	SURFACE	N/A	NO	EGG CRATE, SEE NOTES #2, #3, #4, #7

NOTES:
1. STEEL CONSTRUCTION.
2. ALUMINUM CONSTRUCTION.
3. APPLIANCE WHITE
4. SEE GENERAL NOTE #9
5. SUPPLY LINEAR SLOT DIFFUSER, (2) 1-1/2" SLOTS, SURFACE MOUNT, DIFFUSER FACE WHITE, MITRED END. PROVIDE WITH SDB PLENUM
6. RETURN LINEAR SLOT DIFFUSER, (2) 1-1/2" SLOTS, SURFACE MOUNT, DIFFUSER FACE WHITE, MITRED END. PROVIDE WITH SDB PLENUM
7. PROVIDE WITH REMOTE ACCESS VOLUME DAMPER, METROPOLITAN AIR TECHNOLOGY #RT-200 WITH RT-CCM MINI CEILING CUP.
8. PROVIDE WITH REMOTE ACCESS VOLUME DAMPER, METROPOLITAN AIR TECHNOLOGY #RT-250 WITH RT-CCM MINI CEILING CUP.

SHEET INDEX - MECHANICAL

M0.01	MECHANICAL - SCHEDULES, LEGEND & NOTES
M0.02	MECHANICAL - SCHEDULES, LEGEND, & NOTES
M0.03	MECHANICAL - GREEN BUILDING NOTES
M1.01	MECHANICAL - SITE PLAN
M2.01	MECHANICAL - OVERALL HVAC FLOOR PLAN
M2.02	MECHANICAL - ENLARGED HVAC FLOOR PLAN
M2.03	MECHANICAL - ENLARGED HVAC FLOOR PLAN
M3.01	MECHANICAL - OVERALL HVAC PIPING FLOOR PLAN
M3.02	MECHANICAL - ENLARGED HVAC PIPING FLOOR PLAN
M3.03	MECHANICAL - ENLARGED HVAC PIPING FLOOR PLAN
M4.01	MECHANICAL - ROOF PLAN
M5.01	MECHANICAL - DETAILS
M5.02	MECHANICAL - DETAILS
M5.03	MECHANICAL - DETAILS
M5.04	MECHANICAL - DETAILS
T24.01	ENERGY COMPLIANCE
T24.02	ENERGY COMPLIANCE
T24.03	ENERGY COMPLIANCE
T24.04	ENERGY COMPLIANCE

Division of the State Architect

APPROVED
DIV. OF THE STATE ARCHITECT
APP: 02-119316 INC:
REVIEWED FOR
SS☐ FLS☐ ACS☑
DATE: 03/24/2022

Office of the State Fire Marshal

OFFICE OF THE STATE FIRE MARSHAL
APPROVED FIRE AND PANIC ONLY
03/14/22
21-0498
Approval of this plan does not authorize or approve any omission or deviation from applicable regulations. Final approval is subject to field inspection. One set of approved plans shall be available on the project site at all times.

CSUS CHILD DEVELOPMENT CENTER

CALIFORNIA STATE UNIVERSITY, STANISLAUS
ONE UNIVERSITY CIRCLE
TURLOCK, CA 95382

ehdd.

PIER 1, BAY 2
THE EMBARCADERO
SAN FRANCISCO, CA 94111

INFO@EHDD.COM
+1 415-285-9193

Consultant

neXus engineering
Consulting Mechanical Engineers
1400 Lone Palm Ave, Suite A
Modesto, CA 95351
Tel: 209.572.7399 Fax: 209.236.1579
www.nexusengineering.net
HVAC , Plumbing/Piping , Fire Sprinklers
Process/Plant Engineering , Refrigeration

Stamp

REGISTERED PROFESSIONAL ENGINEER — LEN LEONARDI — No. M 24960 — Exp. 6/30/2023 — MECHANICAL — STATE OF CALIFORNIA

Printing	Date
95% CONSTRUCTION DOCUMENTS	06.25.2021
PERMIT SET	08.16.2021
PERMIT SET - DSA V2	12.15.2021
PERMIT SET - SFM	12.21.2021

Revisions and Description	Date

Scale
12" = 1'-0"

Drawn by
GL

EHDD Job Number
KLA 20-2266

Sheet Title
MECHANICAL - SCHEDULES, LEGEND & NOTES

Sheet Number
M0.01 V3

C:\Users\o.garcia\Documents\220251 CSUS Child Development MP 19_o.garcia@nexusengineering.net.rvt

12/8/2021 2:01:01 PM

VENTILATION CALCULATIONS

TAG (VAV)	ROOM NO.	ROOM NAME	OUTDOOR AIRFLOW RATE CRITERIA (AREA)	OUTDOOR AIRFLOW RATE CRITERIA (OCCUPANT)	MIN OUTDOOR AIRFLOW RATE BY AREA (CFM)	MIN OUTDOOR AIRFLOW RATE BY OCCUPANT (CFM)	MIN OUTDOOR AIRFLOW RATE BY OCCUPANT				ROOM AREA (SF)
							OSA	SUPPLY	RETURN	EXHAUST	
100	108	RESOURCE STOR.	0.15 CFM/SQ FT.	1.2	17	18	26	75	-	-	113.0
100	111 & 111A	TODDLER B & DROPOFF	0.21 CFM/SQ FT.	20.0	156	200	254	725	695	-	744.0
101	110	OBSERVATION	0.15 CFM/SQ FT.	6.0	37	90	105	300	300	-	249
102	107, 107A & 107B	TODDLER CLASS A, DROPOFF & TODDLER NAP	0.21 CFM/SQ FT.	20.0	207	200	352	1,005	900	-	984
102	109	TOILETS	EXHAUST REQUIRED	0.0	0	0	-	-	-	210	155
103	101	ASSOC. DIR	0.15 CFM/SQ FT.	2.0	19	30	61	175	175	-	125
103	102	SHARED OFFICE	0.15 CFM/SQ FT.	3.0	21	45	88	250	250	-	140
105	104	DIR.	0.15 CFM/SQ FT.	3.0	21	44	61	175	175	-	142
105	105	OFFICE	0.15 CFM/SQ FT.	2.0	17	30	53	150	150	-	113
105	106	FILE/COPY	0.15 CFM/SQ FT.	1.1	12	16	44	125	-	-	77
106 & 117	103, 113, 140 & 121	LOBBY, EAST HALLWAY, WEST HALLWAY & SOUTH ENTRY	0.15 CFM/SQ FT.	22.0	366	330	452	1,290	1,155	-	2,440
109	100	RECEPTION	0.15 CFM/SQ FT.	3.0	33	46	123	350	-	-	217
110	136	RESOURCE STOR.	0.15 CFM/SQ FT.	1.0	16	15	26	75	-	-	105
108 & 110	139, 139A, 139B & 139C	INFANT CLASS B, DROPOFF, INFANT B NAP, CHANGING	0.21 CFM/SQ FT.	17.0	175	255	266	760	610	80	834
111	137	KITCHENETTE	0.15 CFM/SQ FT.	2.0	15	30	53	150	-	140	102
111	138	OBSERVATION	0.15 CFM/SQ FT.	6.0	33	90	96	275	275	-	218
112 &113	135, 135A 135B & 135C	INFANT CLASS A, DROPOFF, CHANGING, INFANT A NAP	0.21 CFM/SQ FT.	17.0	175	255	333	950	800	80	834
114	134	MEETING ROOM	0.5 CFM/SQ FT.	14.0	203	210	228	650	650	-	405
115	123A	SINGLE ALL GENDER	EXHAUST REQUIRED	0.0	0	0	21	60	-	90	65.0
115	123B	ALL GENDER	EXHAUST REQUIRED	0.0	0	0	61	175	-	420	312.5
115	124	LACTATION	0.15 CFM/SQ FT.	1.0	9	15	21	60	-	-	57.0
115	125	CUSTODIAN	EXHAUST REQUIRED	0.0	0	0	-	-	-	50	37.0
115	129	STORAGE/LAUNDRY	0.15 CFM/SQ FT.	1.7	52	25	61	175	-	200	345
116	122	WORK ROOM	0.5 CFM/SQ FT.	12.0	149	180	210	600	400	200	297.0
118	120	STAFF KITCHEN	0.5 CFM/SQ FT.	14.1	282	212	333	950	-	1,075	564.0
118	120A	PANTRY	0.5 CFM/SQ FT.	2.1	19	32	114	325	-	300	128.0
119	116	RESOURCE STOR.	0.15 CFM/SQ FT.	1.0	23	15	28	80	-	-	152.0
119	119, 119A & 119B	PRE-K CLASS A, DROPOOF & PRE-K NAP	0.21 CFM/SQ FT.	20.0	240	300	376	1,075	1,050	-	1143.0
120	118	OBSERVATION	0.15 CFM/SQ FT.	6.0	37	90	105	300	300	-	249.0
121	115 & 115A	PRE-K CLASS B & DROPOFF	0.21 CFM/SQ FT.	20.0	183	300	315	900	800	-	872.0
121	117	TOILET	EXHAUST REQUIRED	0.0	0	0	-	-	-	200	142.0
122	126	RESEARCH	0.15 CFM/SQ FT.	3.0	13	45	46	130	130	-	88
122	127	OBSERVATION	0.15 CFM/SQ FT.	4.0	16	60	60	170	170	-	105
122	128	RESEARCH	0.15 CFM/SQ FT.	3.0	13	45	46	130	130	-	89
N/A	112	OUTDOOR STOR.	UNOCCUPIED	0.0	0	0	-	-	-	-	144.0
N/A	114	OUTDOOR STOR.	UNOCCUPIED	0.0	0	0	-	-	-	-	138.0
N/A	130	ELEC	UNOCCUPIED	0.0	0	0	-	-	-	-	133
N/A	131	MAINT. STOR.	UNOCCUPIED	0.0	0	0	-	-	-	-	55
N/A	132	COMM	UNOCCUPIED	0.0	0	0	-	-	-	-	96
N/A	133	MECHANICAL	UNOCCUPIED	0.0	0	0	-	-	-	-	387

PIPING MATERIAL SPECIFICATIONS

A. HYDRONIC PIPE (HHWS/R & CHWS/R) ABOVE GROUND
- PIPE: COPPER TYPE K PER ASTM B-88
- FITTINGS: WROUGHT COPPER SOLDER OR PRESSED FITTINGS PER ASTM B16.18, B16.22
- INSULATION: FIBERGLASS WITH PVC JACKET INDOORS, ALUMINUM JACKET OUTDOORS
  - HHWS/R 1-1/4" & SMALLER : 1-1/2" INSULATION
  - HHWS/R 1-1/2" & LARGER : 2" INSULATION
  - CHWS/R : 1" INSULATION

B. HYDRONIC PIPE (HHWS/R & CHWS/R) BELOW GROUND
- PIPE: SDR 11 "AQUATHERM BLUE PIPE MF" POLYPROPYLENE-RANDOM (PP-R) WITH MULTI-LAYER FASER-COMPOSITE, PER ASTM F2389
- FITTINGS: PP-R WITH HEAT FUSION JOINTS, PER CSA B137.11, FLANGES WHERE REQUIRED.
- INSULATION: 90-95% CLOSED CELL RIGID POLYURETHANE (K=0.16 @ 75°F), 60 MIL PVC JACKET, PER ASTM D1784. SEAL JACKET SEAMS WITH PRESSURE SENSITIVE WRAP, 30 MILS THICK AS SUPPLIED BY THERMACOR PROCESS INC. OR EQUAL
  - HHWS/R: 1-1/2" INSULATION
  - CHWS/R: 1" INSULATION
- PROVIDE CONTINUOUS DETECTABLE WARNING TAPE AT 6" TO 12" BELOW GRADE

DUCTWORK NOTES

1. TYPES OF DUCTWORK REQUIRED FOR THIS PROJECT INCLUDE THE FOLLOWING: SHEET METAL DUCTWORK AND FLEXIBLE DUCTWORK.
2. CONSTRUCT ALL DUCTWORK FOR 4 INCH W.G. PRESSURE CLASS PER SMACNA REQUIREMENTS, UNLESS OTHERWISE NOTED ON PLANS.
3. AT PROJECT CLOSE-OUT, SUBMIT RECORD DRAWINGS OF INSTALLED DUCTWORK, DUCT ACCESSORIES, OUTLETS AND INLETS.
4. ALL AIR DISTRIBUTION DUCTWORK SHALL COMPLY WITH THE REQUIREMENTS FOR AIR DISTRIBUTION SYSTEM DUCTS AND PLENUMS AS OUTLINED IN THE 2019 CEC, SECTION 120.4.
5. FABRICATE DUCT FITTINGS TO MATCH ADJOINING DUCTS AND EQUIPMENT OPENINGS. UNLESS OTHERWISE NOTED ON THE PLANS, FABRICATE ELBOWS WITH CENTER-LINE RADIUS TO EQUAL 1.5 TIMES THE ASSOCIATED DUCT WIDTH. TURNING VANES WITH 2" RADIUS SHALL BE INSTALLED IN RECTANGULAR ELBOWS WHERE A SHORTER DUCT RADIUS IS NECESSARY. TAPER ANGLE OF TRANSITION FITTINGS SHALL BE LIMITED TO 30 DEGREES OR LESS FOR REDUCING TRANSITIONS AND 20 DEGREES FOR EXPANDING TRANSITIONS.
6. UTILIZE SPIRAL LOCK SEAM PREFABRICATED FACTORY-BUILT DUCT & FITTINGS WHEREVER POSSIBLE.
7. ALL RECTANGULAR BRANCHES SHALL BE CONSTRUCTED OF ADJUSTABLE SPLITTER DAMPERS OR WYE FITTINGS AS SHOWN ON THE DRAWINGS. PROVIDE BRANCH EXTRACTORS AND/OR DAMPERS ON WYE FITTINGS TO PROVIDE REQUIRED AIRFLOW.
8. AIR DISTRIBUTION SYSTEMS SHALL BE INSULATED TO COMPLY WITH THE 2019 CEC, SECTIONS 110.8 AND 120.4 AND THE CMC, SECTION 604.
   - 8.1. DUCTWORK LOCATED IN UNCONDITIONED SPACES (E.G. MECHANICAL ROOM) = R-8
   - 8.2. DUCTWORK LOCATED IN INDIRECTLY CONDITIONED SPACES (I.E. ABOVE CEILING) = R-4.2
   - 8.3. DUCTWORK LOCATED IN DIRECTLY CONDITIONED SPACE = NO INSULATION REQUIRED.
9. METAL DUCTS SHALL BE INSTALLED AND SUPPORTED TO COMPLY WITH THE 2019 CMC, SECTION 603.

C:\Users\o.garcia\Documents\20251 CSUS Child Development MP 19_o.garcia@nexusengineering.net.rvt

Division of the State Architect

APPROVED
DIV. OF THE STATE ARCHITECT
APP: 02-119316 INC:
REVIEWED FOR
SS☐ FLS☐ ACS☑
DATE: 03/24/2022

Office of the State Fire Marshal

OFFICE OF THE STATE FIRE MARSHAL
APPROVED FIRE AND PANIC ONLY
03/14/22
21-0498
Approval of this plan does not authorize or approve any omission or deviation from applicable requirements. Final approval is subject to field inspection. One set of approved plans shall be available on the project site at all times.

CSUS CHILD DEVELOPMENT CENTER

CALIFORNIA STATE UNIVERSITY, STANISLAUS
ONE UNIVERSITY CIRCLE
TURLOCK, CA 95382

ehdd.

PIER 1, BAY 2
THE EMBARCADERO
SAN FRANCISCO, CA 94111

INFO@EHDD.COM
+1 415-285-9193

Consultant

neXus engineering
Consulting Mechanical Engineers
1400 Lone Palm Ave, Suite A
Modesto, CA 95351
Tel: 209.572.7399 Fax: 209.236.1579
www.nexusengineering.net
HVAC , Plumbing/Piping , Fire Sprinklers
Process/Plant Engineering , Refrigeration

Stamp

LEN LAWSON — PROFESSIONAL ENGINEER — MECHANICAL — STATE OF CALIFORNIA

Printing	Date
95% CONSTRUCTION DOCUMENTS	06.25.2021
PERMIT SET	08.16.2021
PERMIT SET - DSA V2	12.15.2021
PERMIT SET - SFM	12.21.2021

Revisions and Description	Date

Scale
12" = 1'-0"

Drawn by
Author

EHDD Job Number
KLA 20-2266

Sheet Title
MECHANICAL - SCHEDULES, LEGEND, & NOTES

Sheet Number
M0.02 V3

12/8/2021 2:01:02 PM

MECHANICAL GREEN BUILDING CODE NOTES

REQUIRED

SECTION 5.410 BUILDING MAINTENANCE AND OPERATIONS

5.410.1 RECYCLING BY OCCUPANTS. PROVIDE READILY ACCESSIBLE AREAS THAT SERVE THE ENTIRE BUILDING AND ARE IDENTIFIED FOR THE DEPOSITING, STORAGE AND COLLECTION OF NON-HAZARDOUS MATERIALS FOR RECYCLING, INCLUDING (AT A MINIMUM) PAPER, CORRUGATED CARDBOARD, GLASS, PLASTICS, ORGANIC WASTE, AND METALS OR MEET A LAWFULLY ENACTED LOCAL RECYCLING ORDINANCE, IF MORE RESTRICTIVE.

EXCEPTION: RURAL JURISDICTIONS THAT MEET AND APPLY FOR THE EXEMPTION IN PUBLIC RESOURCES CODE 42649.82 (A)(2)(A) ET SEQ. SHALL ALSO BE EXEMPT FROM THE ORGANIC WASTE PORTION OF THIS SECTION.

5.410.1.1 ADDITIONS. ALL ADDITIONS CONDUCTED WITHIN A 12-MONTH PERIOD UNDER SINGLE OR MULTIPLE PERMITS, RESULTING IN AN INCREASE OF 30% OR MORE IN FLOOR AREA, SHALL PROVIDE RECYCLING AREAS ON SITE.

EXCEPTION: ADDITIONS WITHIN A TENANT SPACE RESULTING IN LESS THAN A 30% INCREASE IN THE TENANT SPACE FLOOR AREA.

5.410.1.2 SAMPLE ORDINANCE. SPACE ALLOCATION FOR RECYCLING AREAS SHALL COMPLY WITH CHAPTER 18, PART 3, DIVISION 30 OF THE PUBLIC RESOURCES CODE. CHAPTER 18 IS KNOWN AS THE CALIFORNIA SOLID WASTE REUSE AND RECYCLING ACCESS ACT OF 1991 (ACT).

NOTE: A SAMPLE ORDINANCE FOR USE BY LOCAL AGENCIES MAY BE FOUND IN APPENDIX A OF THE DOCUMENT AT THE CALRECYCLE'S WEB SITE.

[X] 5.410.2 COMMISSIONING. [N] FOR NEW BUILDINGS 10,000 SQUARE FEET AND OVER, BUILDING COMMISSIONING SHALL BE INCLUDED IN THE DESIGN AND CONSTRUCTION PROCESSES OF THE BUILDING PROJECT TO VERIFY THAT THE BUILDING SYSTEMS AND COMPONENTS MEET THE OWNER'S OR OWNER REPRESENTATIVE'S PROJECT REQUIREMENTS. COMMISSIONING SHALL BE PERFORMED IN ACCORDANCE WITH THIS SECTION BY TRAINED PERSONNEL WITH EXPERIENCE ON PROJECTS OF COMPARABLE SIZE AND COMPLEXITY. FOR I-OCCUPANCIES THAT ARE NOT REGULATED BY OSHPD OR FOR I-OCCUPANCIES AND L-OCCUPANCIES THAT ARE NOT REGULATED BY THE CALIFORNIA ENERGY CODE SECTION 100.0 SCOPE, ALL REQUIREMENTS IN SECTIONS 5.410.2 THROUGH 5.410.2.6 SHALL APPLY.

NOTE: FOR ENERGY-RELATED SYSTEMS UNDER THE SCOPE (SECTION 100) OF THE CALIFORNIA ENERGY CODE, INCLUDING HEATING, VENTILATION, AIR CONDITIONING (HVAC) SYSTEMS AND CONTROLS, INDOOR LIGHTING SYSTEMS AND CONTROLS, AS WELL AS WATER HEATING SYSTEMS AND CONTROLS, REFER TO CALIFORNIA ENERGY CODE SECTION 120.8 FOR COMMISSIONING REQUIREMENTS.

COMMISSIONING REQUIREMENTS SHALL INCLUDE:

1. OWNER'S OR OWNER REPRESENTATIVE'S PROJECT REQUIREMENTS.
2. BASIS OF DESIGN.
3. COMMISSIONING MEASURES SHOWN IN THE CONSTRUCTION DOCUMENTS.
4. COMMISSIONING PLAN.
5. FUNCTIONAL PERFORMANCE TESTING.
6. DOCUMENTATION AND TRAINING.
7. COMMISSIONING REPORT.

[ ] EXCEPTIONS:

1. UNCONDITIONED WAREHOUSES OF ANY SIZE.
2. AREAS LESS THAN 10,000 SQUARE FEET USED FOR OFFICES OR OTHER CONDITIONED ACCESSORY SPACES WITHIN UNCONDITIONED WAREHOUSES.
3. TENANT IMPROVEMENTS LESS THAN 10,000 SQUARE FEET AS DESCRIBED IN SECTION 303.1.1.
4. OPEN PARKING GARAGES OF ANY SIZE, OR OPEN PARKING GARAGE AREAS, OF ANY SIZE, WITHIN A STRUCTURE.

NOTE: FOR THE PURPOSES OF THIS SECTION, UNCONDITIONED SHALL MEAN A BUILDING, AREA, OR ROOM WHICH DOES NOT PROVIDE HEATING AND OR AIR CONDITIONING.

INFORMATIONAL NOTES:

1. IAS AC 476 IS AN ACCREDITATION CRITERIA FOR ORGANIZATIONS PROVIDING TRAINING AND/OR CERTIFICATION OF COMMISSIONING PERSONNEL. AC 476 IS AVAILABLE TO THE AUTHORITY HAVING JURISDICTION AS A REFERENCE FOR QUALIFICATIONS OF COMMISSIONING PERSONNEL. AC 476 DES NOT CERTIFY INDIVIDUALS TO CONDUCT FUNCTIONAL PERFORMANCE TESTS OR TO ADJUST AND BALANCE SYSTEMS.

2. FUNCTIONAL PERFORMANCE TESTING FOR HEATING, VENTILATION, AIR CONDITIONING SYSTEMS AND LIGHTING CONTROLS MUST BE PERFORMED IN COMPLIANCE WITH THE CALIFORNIA ENERGY CODE.

5.410.2.1 OWNER'S OR OWNER REPRESENTATIVE'S PROJECT REQUIREMENTS (OPR). [N] THE EXPECTATIONS AND REQUIREMENTS OF THE BUILDING APPROPRIATE TO ITS PHASE SHALL BE DOCUMENTED BEFORE THE DESIGN PHASE OF THE PROJECT BEGINS. THIS DOCUMENTATION SHALL INCLUDE THE FOLLOWING:

1. ENVIRONMENTAL AND SUSTAINABILITY GOALS.
2. ENERGY EFFICIENCY GOALS.
3. INDOOR ENVIRONMENTAL QUALITY REQUIREMENTS.
4. PROJECT PROGRAM, INCLUDING FACILITY FUNCTIONS AND HOURS OF OPERATION, AND NEED FOR AFTER HOURS OPERATION.
5. EQUIPMENT AND SYSTEMS EXPECTATIONS.
6. BUILDING OCCUPANT AND OPERATION AND MAINTENANCE (O&M) PERSONNEL EXPECTATIONS.

5.410.2.2 BASIS OF DESIGN (BOD). [N] A WRITTEN EXPLANATION OF HOW THE DESIGN OF THE BUILDING SYSTEMS MEETS THE OPR SHALL BE COMPLETED AT THE DESIGN PHASE OF THE BUILDING PROJECT. THE BASIS OF DESIGN DOCUMENT SHALL COVER THE FOLLOWING SYSTEMS:

1. RENEWABLE ENERGY SYSTEMS.
2. LANDSCAPE IRRIGATION SYSTEMS.
3. WATER REUSE SYSTEMS.

5.410.2.3 COMMISSIONING PLAN. [N] PRIOR TO PERMIT ISSUANCE A COMMISSIONING PLAN SHALL BE COMPLETED TO DOCUMENT HOW THE PROJECT WILL BE COMMISSIONED. THE COMMISSIONING PLAN SHALL INCLUDE THE FOLLOWING:

1. GENERAL PROJECT INFORMATION.
2. COMMISSIONING GOALS.
3. SYSTEMS TO BE COMMISSIONED. PLANS TO TEST SYSTEMS AND COMPONENTS SHALL INCLUDE:
   - A. AN EXPLANATION OF THE ORIGINAL DESIGN INTENT.
   - B. EQUIPMENT AND SYSTEMS TO BE TESTED, INCLUDING THE EXTENT OF TESTS.
   - C. FUNCTIONS TO BE TESTED.
   - D. CONDITIONS UNDER WHICH THE TEST SHALL BE PERFORMED.
   - E. MEASURABLE CRITERIA FOR ACCEPTABLE PERFORMANCE.
4. COMMISSIONING TEAM INFORMATION.
5. COMMISSIONING PROCESS ACTIVITIES, SCHEDULES AND RESPONSIBILITIES. PLANS FOR THE COMPLETION OF COMMISSIONING SHALL BE INCLUDED.

5.410.2.4 FUNCTIONAL PERFORMANCE TESTING. [N] FUNCTIONAL PERFORMANCE TESTS SHALL DEMONSTRATE THE CORRECT INSTALLATION AND OPERATION OF EACH COMPONENT, SYSTEM AND SYSTEM-TO-SYSTEM INTERFACE IN ACCORDANCE WITH THE APPROVED PLANS AND SPECIFICATIONS. FUNCTIONAL PERFORMANCE TESTING REPORTS SHALL CONTAIN INFORMATION ADDRESSING EACH OF THE BUILDING COMPONENTS TESTED, THE TESTING METHODS UTILIZED, AND INCLUDE ANY READINGS AND ADJUSTMENTS MADE.

REQUIRED

5.410.2.5 DOCUMENTATION AND TRAINING. [N] A SYSTEMS MANUAL AND SYSTEMS OPERATIONS TRAINING ARE REQUIRED, INCLUDING OCCUPATIONAL SAFETY AND HEALTH ACT (OSHA) REQUIREMENTS IN CALIFORNIA CODE OF REGULATIONS (CCR), TITLE 8, SECTION 5142, AND OTHER RELATED REGULATIONS.

5.410.2.5.1 SYSTEMS MANUAL. [N] DOCUMENTATION OF THE OPERATIONAL ASPECTS OF THE BUILDING SHALL BE COMPLETED WITHIN THE SYSTEMS MANUAL AND DELIVERED TO THE BUILDING OWNER OR REPRESENTATIVE. THE SYSTEMS MANUAL SHALL INCLUDE THE FOLLOWING:

1. SITE INFORMATION, INCLUDING FACILITY DESCRIPTION, HISTORY AND CURRENT REQUIREMENTS.
2. SITE CONTACT INFORMATION.
3. BASIC OPERATIONS AND MAINTENANCE, INCLUDING GENERAL SITE OPERATING PROCEDURES, BASIC TROUBLESHOOTING, RECOMMENDED MAINTENANCE REQUIREMENTS, SITE EVENTS LOG.
4. MAJOR SYSTEMS.
5. SITE EQUIPMENT INVENTORY AND MAINTENANCE NOTES.
6. A COPY OF VERIFICATIONS REQUIRED BY THE ENFORCING AGENCY OR THIS CODE.
7. OTHER RESOURCES AND DOCUMENTATION, IF APPLICABLE.

5.410.2.5.2 SYSTEMS OPERATIONS TRAINING. [N] A PROGRAM FOR TRAINING OF THE APPROPRIATE MAINTENANCE STAFF FOR EACH EQUIPMENT TYPE AND/OR SYSTEM SHALL BE DEVELOPED AND DOCUMENTED IN THE COMMISSIONING REPORT AND SHALL INCLUDE THE FOLLOWING

1. SYSTEM/EQUIPMENT OVERVIEW (WHAT IT IS, WHAT IT DOES AND WITH WHAT OTHER SYSTEMS AND/OR EQUIPMENT IT INTERFACES).
2. REVIEW AND DEMONSTRATION OF SERVICING/PREVENTIVE MAINTENANCE.
3. REVIEW OF THE INFORMATION IN THE SYSTEMS MANUAL.
4. REVIEW OF THE RECORD DRAWINGS ON THE SYSTEM/EQUIPMENT.

5.410.2.6 COMMISSIONING REPORT. [N] A REPORT OF COMMISSIONING PROCESS ACTIVITIES UNDERTAKEN THROUGH THE DESIGN AND CONSTRUCTION PHASES OF THE BUILDING PROJECT SHALL BE COMPLETED AND PROVIDED TO THE OWNER OR REPRESENTATIVE.

[ ] 5.410.4 TESTING AND ADJUSTING. TESTING AND ADJUSTING OF SYSTEMS SHALL BE REQUIRED FOR BUILDINGS LESS THAN 10,000 SQUARE FEET OR NEW SYSTEMS TO SERVE AN ADDITION OR ALTERATION SUBJECT TO SECTION 303.1.

NOTE: FOR ENERGY-RELATED SYSTEMS UNDER THE SCOPE (SECTION 100) OF THE CALIFORNIA ENERGY CODE, INCLUDING HEATING, VENTILATION, AIR CONDITIONING (HVAC) SYSTEMS AND CONTROLS, INDOOR LIGHTING SYSTEMS AND CONTROLS, AS WELL AS WATER HEATING SYSTEMS AND CONTROLS, REFER TO CALIFORNIA ENERGY CODE SECTION 120.8 FOR COMMISSIONING REQUIREMENTS AND SECTIONS 120.5, 120.6, 130.4, AND 140.9(B)3 FOR ADDITIONAL TESTING REQUIREMENTS OF SPECIFIC SYSTEMS.

5.410.4.2 SYSTEMS. DEVELOP A WRITTEN PLAN OF PROCEDURES FOR TESTING AND ADJUSTING SYSTEMS. SYSTEMS TO BE INCLUDED FOR TESTING AND ADJUSTING SHALL INCLUDE AT A MINIMUM, AS APPLICABLE TO THE PROJECT:

1. RENEWABLE ENERGY SYSTEMS.
2. LANDSCAPE IRRIGATION SYSTEMS.
3. WATER REUSE SYSTEMS.

[X] 5.410.4.3 PROCEDURES. PERFORM TESTING AND ADJUSTING PROCEDURES IN ACCORDANCE WITH MANUFACTURER'S SPECIFICATIONS AND APPLICABLE STANDARDS ON EACH SYSTEM.

5.410.4.3.1 HVAC BALANCING. IN ADDITION TO TESTING AND ADJUSTING, BEFORE A NEW SPACE-CONDITIONING SYSTEM SERVING A BUILDING OR SPACE IS OPERATED FOR NORMAL USE, THE SYSTEM SHALL BE BALANCED IN ACCORDANCE WITH THE PROCEDURES DEFINED BY THE TESTING ADJUSTING AND BALANCING BUREAU NATIONAL STANDARDS; THE NATIONAL ENVIRONMENTAL BALANCING BUREAU PROCEDURAL STANDARDS; ASSOCIATED AIR BALANCE COUNCIL NATIONAL STANDARDS OR AS APPROVED BY THE ENFORCING AGENCY.

[X] 5.410.4.4 REPORTING. AFTER COMPLETION OF TESTING, ADJUSTING AND BALANCING, PROVIDE A FINAL REPORT OF TESTING SIGNED BY THE INDIVIDUAL RESPONSIBLE FOR PERFORMING THESE SERVICES.

[X] 5.410.4.5 OPERATION AND MAINTENANCE (O & M) MANUAL. PROVIDE THE BUILDING OWNER OR REPRESENTATIVE WITH DETAILED OPERATING AND MAINTENANCE INSTRUCTIONS AND COPIES OF GUARANTIES/WARRANTIES FOR EACH SYSTEM. O & M INSTRUCTIONS SHALL BE CONSISTENT WITH OSHA REQUIREMENTS IN CCR, TITLE 8, SECTION 5142, AND OTHER RELATED REGULATIONS.

5.410.4.5.1 INSPECTIONS AND REPORTS. INCLUDE A COPY OF ALL INSPECTION VERIFICATIONS AND REPORTS REQUIRED BY THE ENFORCING AGENCY.

DIVISION 5.5 ENVIRONMENTAL QUALITY

SECTION 5.501 GENERAL

5.501.1 SCOPE. THE PROVISIONS OF THIS CHAPTER SHALL OUTLINE MEANS OF REDUCING THE QUANTITY OF AIR CONTAMINANTS THAT ARE ODOROUS, IRRITATING, AND/OR HARMFUL TO THE COMFORT AND WELL-BEING OF A BUILDING'S INSTALLERS, OCCUPANTS AND NEIGHBORS.

SECTION 5.502 DEFINITIONS

5.502.1 DEFINITIONS. THE FOLLOWING TERMS ARE DEFINED IN CHAPTER 2 (AND ARE INCLUDED HERE FOR REFERENCE)

ARTERIAL HIGHWAY. A GENERAL TERM DENOTING A HIGHWAY PRIMARILY FOR THROUGH TRAFFIC USUALLY ON A CONTINUOUS ROUTE.

A-WEIGHTED SOUND LEVEL (DBA). THE SOUND PRESSURE LEVEL IN DECIBELS AS MEASURED ON A SOUND LEVEL METER USING THE INTERNATIONALLY STANDARDIZED A-WEIGHTING FILTER OR AS COMPUTED FROM SOUND SPECTRAL DATA TO WHICH A-WEIGHTING ADJUSTMENTS HAVE BEEN MADE.

1 BTU/HOUR. BRITISH THERMAL UNITS PER HOUR. ALSO REFERRED TO AS BTU. THE AMOUNT OF HEAT REQUIRED TO RAISE ONE POUND OF WATER ONE DEGREE FAHRENHEIT PER HOUR, A COMMON MEASURE OF HEAT TRANSFER RATE. A TON OF REFRIGERATION IS 12,000 BTU, THE AMOUNT OF HEAT REQUIRED TO MELT A TON (2,000 POUNDS) OF ICE AT 32° FAHRENHEIT.

COMMUNITY NOISE EQUIVALENT LEVEL (CNEL). A METRIC SIMILAR TO THE DAY-NIGHT AVERAGE SOUND LEVEL (LDN), EXCEPT THAT A 5 DECIBEL ADJUSTMENT IS ADDED TO THE EQUIVALENT CONTINUOUS SOUND EXPOSURE LEVEL FOR EVENING HOURS (7PM TO 10PM) IN ADDITION TO THE 10 DB NIGHTTIME ADJUSTMENT USED IN THE LDN.

COMPOSITE WOOD PRODUCTS. COMPOSITE WOOD PRODUCTS INCLUDE HARDWOOD PLYWOOD, PARTICLEBOARD AND MEDIUM DENSITY FIBERBOARD. "COMPOSITE WOOD PRODUCTS" DOES NOT INCLUDE HARDBOARD, STRUCTURAL PLYWOOD, STRUCTURAL PANELS, STRUCTURAL COMPOSITE LUMBER, ORIENTED STRAND BOARD, GLUED LAMINATED TIMBER, TIMBER, PREFABRICATED WOOD I–JOISTS OR FINGER–JOINTED LUMBER, ALL AS SPECIFIED IN CALIFORNIA CODE OF REGULATIONS (CCR), TITLE 17, SECTION 93120.1(A).

NOTE: SEE CCR, TITLE 17, SECTION 93120.1.

DAY-NIGHT AVERAGE SOUND LEVEL (LDN). THE A-WEIGHTED EQUIVALENT CONTINUOUS SOUND EXPOSURE LEVEL FOR A 24-HOUR PERIOD WITH A 10 DB ADJUSTMENT ADDED TO SOUND LEVELS OCCURRING DURING NIGHTTIME HOURS (10P.M. TO 7 A.M.).

DECIBEL (DB). A MEASURE ON A LOGARITHMIC SCALE OF THE MAGNITUDE OF A PARTICULAR QUANTITY (SUCH AS SOUND PRESSURE, SOUND POWER, SOUND INTENSITY) WITH RESPECT TO A REFERENCE QUANTITY.

REQUIRED

SECTION 5.502 DEFINITIONS (CONT.)

ENERGY EQUIVALENT (NOISE) LEVEL (LEQ). THE LEVEL OF A STEADY NOISE WHICH WOULD HAVE THE SAME ENERGY AS THE FLUCTUATING NOISE LEVEL INTEGRATED OVER THE TIME OF PERIOD OF INTEREST.

EXPRESSWAY. AN ARTERIAL HIGHWAY FOR THROUGH TRAFFIC WHICH MAY HAVE PARTIAL CONTROL OF ACCESS, BUT WHICH MAY OR MAY NOT BE DIVIDED OR HAVE GRADE SEPARATIONS AT INTERSECTIONS.

FREEWAY. A DIVIDED ARTERIAL HIGHWAY WITH FULL CONTROL OF ACCESS AND WITH GRADE SEPARATIONS AT INTERSECTIONS.

GLOBAL WARMING POTENTIAL (GWP). THE RADIATIVE FORCING IMPACT OF ONE MASS-BASED UNIT OF A GIVEN GREENHOUSE GAS RELATIVE TO AN EQUIVALENT UNIT OF CARBON DIOXIDE OVER A GIVEN PERIOD OF TIME. CARBON DIOXIDE IS THE REFERENCE COMPOUND WITH A GWP OF ONE.

GLOBAL WARMING POTENTIAL VALUE (GWP VALUE). A 100-YEAR GWP VALUE PUBLISHED BY THE INTERGOVERNMENTAL PANEL ON CLIMATE CHANGE (IPCC) IN EITHER ITS SECOND ASSESSMENT REPORT (SAR) (IPCC, 1995); OR ITS FOURTH ASSESSMENT A-3 REPORT (AR4) (IPCC, 2007). THE SAR GWP VALUES ARE FOUND IN COLUMN "SAR (100-YR)" OF TABLE 2.14.; THE AR4 GWP VALUES ARE FOUND IN COLUMN "100 YR" OF TABLE 2.14.

HIGH-GWP REFRIGERANT. A COMPOUND USED AS A HEAT TRANSFER FLUID OR GAS THAT IS: (A) A CHLOROFLUOROCARBON, A HDROCHLOROFLUOROCARBON, A HYDROFLUOROCARBON, A PERFLUOROCARBON, OR ANY COMPOUND OR BLEND OF COMPOUNDS, WITH A GWP VALUE EQUAL TO OR GREATER THAN 150, OR (B) ANY OZONE DEPLETING SUBSTANCE AS DEFINED IN TITLE 40 OF THE CODE OF FEDERAL REGULATIONS, PART 82, SEC.82.3 (AS AMENDED MARCH 10, 2009).

LONG RADIUS ELBOW. PIPE FITTING INSTALLED BETWEEN TWO LENGTHS OF PIPE OR TUBING TO ALLOW A CHANGE OF DIRECTION, WITH A RADIUS 1.5 TIMES THE PIPE DIAMETER.

LOW-GWP REFRIGERANT. A COMPOUND USED AS A HEAT TRANSFER FLUID OR GAS THAT: (A) HAS A GWP VALUE LESS THAN 150, AND (B) IS NOT AN OZONE DEPLETING SUBSTANCE AS DEFINED IN TITLE 40 OF THE CODE OF FEDERAL REGULATIONS, PART 82, SEC.82.3 (AS AMENDED MARCH 10, 2009).

MERV. FILTER MINIMUM EFFICIENCY REPORTING VALUE, BASED ON ASHRAE 52.2–1999.

MAXIMUM INCREMENTAL REACTIVITY (MIR). THE MAXIMUM CHANGE IN WEIGHT OF OZONE FORMED BY ADDING A COMPOUND TO THE "BASE REACTIVE ORGANIC GAS (ROG) MIXTURE" PER WEIGHT OF COMPOUND ADDED, EXPRESSED TO HUNDRETHS OF A GRAM (G O ^{3}/G ROC).

PRODUCT-WEIGHTED MIR (PWMIR). THE SUM OF ALL WEIGHTED-MIR FOR ALL INGREDIENTS IN A PRODUCT SUBJECT TO THIS ARTICLE. THE PWMIR IS THE TOTAL PRODUCT REACTIVITY EXPRESSED TO HUNDREDTHS OF A GRAM OF OZONE FORMED PER GRAM OF PRODUCT (EXCLUDING CONTAINER AND PACKAGING).

PSIG. POUNDS PER SQUARE INCH, GUAGE.

REACTIVE ORGANIC COMPOUND (ROC). ANY COMPOUND THAT HAS THE POTENTIAL, ONCE EMITTED, TO CONTRIBUTE TO OZONE FORMATION IN THE TROPOSPHERE.

SCHRADER ACCESS VALVES. ACCESS FITTINGS WITH A VALVE CORE INSTALLED.

SHORT RADIUS ELBOW. PIPE FITTING INSTALLED BETWEEN TWO LENGTHS OF PIPE OR TUBING TO ALLOW A CHANGE OF DIRECTION, WITH A RADIUS 1.0 TIMES THE PIPE DIAMETER.

SUPERMARKET. FOR THE PURPOSES OF SECTION 5.508.2, A SUPERMARKET IS ANY RETAIL FOOD FACILITY WITH 8,000 SQUARE FEET OR MORE CONDITIONED AREA, AND THAT UTILIZES EITHER REFRIGERATED DISPLAY CASES, OR WALK-IN COOLERS OR FREEZERS CONNECTED TO REMOTE COMPRESSOR UNITS OR CONDENSING UNITS.

VOC. A VOLATILE ORGANIC COMPOUND BROADLY DEFINED AS A CHEMICAL COMPOUND BASED ON CARBON CHAINS OR RINGS WITH VAPOR PRESSURES GREATER THAN 0.1 MILLIMETERS OF MERCURY AT ROOM TEMPERATURE. THESE COMPOUNDS TYPICALLY CONTAIN HYDROGEN AND MAY CONTAIN OXYGEN, NITROGEN AND OTHER ELEMENTS. SEE CCR TITLE 17, SECTION 94508(A).

NOTE: WHERE SPECIFIC REGULATIONS ARE CITED FROM DIFFERENT AGENCIES SUCH AS SCAQMD, ARB, ETC., THE VOC DEFINITION INCLUDED IN THAT SPECIFIC REGULATION IS THE ONE THAT PREVAILS FOR THE SPECIFIC MEASURE IN QUESTION.

[ ]

SECTION 5.503 FIREPLACES

5.503.1 FIREPLACES. INSTALL ONLY A DIRECT-VENT SEALED-COMBUSTION GAS OR SEALED WOOD-BURNING FIREPLACE, OR A SEALED WOODSTOVE OR PELLET STOVE, AND REFER TO RESIDENTIAL REQUIREMENTS IN THE CALIFORNIA ENERGY CODE, TITLE 24, PART 6, SUBCHAPTER 7, SECTION 150. WOODSTOVES, PELLET STOVES AND FIREPLACES SHALL COMPLY WITH APPLICABLE LOCAL ORDINANCES.

5.503.1.1 WOODSTOVES. WOODSTOVES AND PELLET STOVES SHALL COMPLY WITH U.S. EPA NEW SOURCE PERFORMANCE STANDARDS (NSPS) EMISSION LIMITS AS APPLICABLE, AND SHALL HAVE A PERMANENT LABEL INDICATING THEY ARE CERTIFIED TO MEET THE EMISSION LIMITS.

[X]

SECTION 5.504 POLLUTANT CONTROL

5.504.1 TEMPORARY VENTILATION. THE PERMANENT HVAC SYSTEM SHALL ONLY BE USED DURING CONSTRUCTION IF NECESSARY TO CONDITION THE BUILDING OR AREAS OF ADDITION OR ALTERATION WITHIN THE REQUIRED TEMPERATURE RANGE FOR MATERIAL AND EQUIPMENT INSTALLATION. IF THE HVAC SYSTEM IS USED DURING CONSTRUCTION, USE RETURN AIR FILTERS WITH A MINIMUM EFFICIENCY REPORTING VALUE (MERV) OF 8, BASED ON ASHRAE 52.2-1999, OR AN AVERAGE EFFICIENCY OF 30% BASED ON ASHRAE 52.1-1992 REPLACE ALL FILTERS IMMEDIATELY PRIOR TO OCCUPANCY, OR, IF THE BUILDING IS OCCUPIED DURING ALTERATION, AT THE CONCLUSION OF CONSTRUCTION.

[X] 5.504.3 COVERING OF DUCT OPENINGS AND PROTECTION OF MECHANICAL EQUIPMENT DURING CONSTRUCTION. AT THE TIME OF ROUGH INSTALLATION, OR DURING STORAGE ON THE CONSTRUCTION SITE AND UNTIL FINAL STARTUP OF THE HEATING, COOLING AND VENTILATING EQUIPMENT, ALL DUCT AND OTHER RELATED AIR DISTRIBUTION COMPONENT OPENINGS SHALL BE COVERED WITH TAPE, PLASTIC, SHEET METAL OR OTHER METHODS ACCEPTABLE TO THE ENFORCING AGENCY TO REDUCE THE AMOUNT OF DUST, WATER AND DEBRIS WHICH MAY COLLECT IN THE SYSTEM.

[X] 5.504.5.3 FILTERS. IN MECHANICALLY VENTILATED BUILDINGS, PROVIDE REGULARLY OCCUPIED AREAS OF THE BUILDING WITH AIR FILTRATION MEDIA FOR OUTSIDE AND RETURN AIR THAT PROVIDES AT LEAS A MINIMUM EFFICIENCY REPORTING VALUE (MERV) OF 13. MERV 13 FILTERS SHALL BE INSTALLED PRIOR TO OCCUPANCY, AND RECOMMENDATIONS FOR MAINTENANCE WITH FILTERS OF THE SAME VALUE SHALL BE INCLUDED IN THE OPERATION AND MAINTENANCE.

EXCEPTIONS: EXISTING MECHANICAL EQUIPMENT.

5.504.5.3.4.1 LABELING. INSTALLED FILTERS SHALL BE CLEARLY LABERED BY THE MANUFACTURER INDICATING THE MERV RATING.

[X]

SECTION 5.505 INDOOR MOISTURE CONTROL

5.505.1 INDOOR MOISTURE CONTROL. BUILDINGS SHALL MEET OR EXCEED THE PROVISIONS OF CALIFORNIA BUILDING CODE, CCR, TITLE 24, PART 2, SECTIONS 1202 (VENTILATION) AND CHAPTER 14 (EXTERIOR WALLS). FOR ADDITIONAL MEASURES, SEE SECTION 5.407.2 OF THIS CODE.

REQUIRED

[X]

SECTION 5.506 INDOOR AIR QUALITY

5.506.1 OUTSIDE AIR DELIVERY. FOR MECHANICALLY OR NATURALLY VENTILATED SPACES IN BUILDINGS, MEET THE MINIMUM REQUIREMENTS OF SECTION 120.1 (REQUIREMENTS FOR VENTILATION) OF THE CALIFORNIA ENERGY CODE, OR THE APPLICABLE LOCAL CODE, WHICHEVER IS MORE STRINGENT, AND DIVISION 1, CHAPTER 4 OF CCR, TITLE 8.

[X] 5.506.2 CARBON DIOXIDE (CO2) MONITORING. FOR BUILDINGS OR ADDITIONS EQUIPPED WITH DEMAND CONTROL VENTILATION, CO2 SENSORS AND VENTILATION CONTROLS SHALL BE SPECIFIED AND INSTALLED IN ACCORDANCE WITH THE REQUIREMENTS OF THE 2013 CALIFORNIA ENERGY CODE, SECTION 120(C)(4)

[X]

SECTION 5.508 OUTDOOR AIR QUALITY

5.508.1 OZONE DEPLETION AND GREENHOUSE GAS REDUCTIONS. INSTALLATIONS OF HVAC, REFRIGERATION AND FIRE SUPPRESSION EQUIPMENT SHALL COMPLY WITH SECTIONS 5.508.1.1 AND 5.508.1.2.

5.508.1.1 CHLOROFLUOROCARBONS (CFCS). INSTALL HVAC, REFRIGERATION AND FIRE SUPPRESSION EQUIPMENT THAT DO NOT CONTAIN CFCS.

5.508.1.2 HALONS. INSTALL HVAC, REFRIGERATION AND FIRE SUPPRESSION EQUIPMENT THAT DO NOT CONTAIN HALONS.

Division of the State Architect

APPROVED
DIV. OF THE STATE ARCHITECT
APP: 02-119316 INC:
REVIEWED FOR
SS☐ FLS☐ ACS☑
DATE: 03/24/2022

Office of the State Fire Marshal

OFFICE OF THE STATE FIRE MARSHAL
APPROVED FIRE AND PANIC ONLY
03/14/22
21-0498
Approval of this plan does not authorize or approve any omission or deviation from applicable regulations. Final approval is subject to field inspection. One set of approved plans shall be available on the project site at all times.

CSUS CHILD DEVELOPMENT CENTER

CALIFORNIA STATE UNIVERSITY, STANISLAUS
ONE UNIVERSITY CIRCLE
TURLOCK, CA 95382

ehdd.

PIER 1, BAY 2
THE EMBARCADERO
SAN FRANCISCO, CA 94111

INFO@EHDD.COM
+1 415-285-9193

Consultant

neXus engineering
Consulting Mechanical Engineers
1400 Lone Palm Ave, Suite A
Modesto, CA 95351
Tel: 209.572.7399 Fax: 209.236.1579
www.nexusengineering.net
HVAC , Plumbing/Piping , Fire Sprinklers
Process/Plant Engineering , Refrigeration

Stamp

PROFESSIONAL ENGINEER — LEN LAVALLEE — MECHANICAL — STATE OF CALIFORNIA

Printing	Date
95% CONSTRUCTION DOCUMENTS	06.25.2021
PERMIT SET	08.16.2021
PERMIT SET - DSA V2	12.15.2021
PERMIT SET - SFM	12.21.2021

Revisions and Description	Date

Scale
12" = 1'-0"

Drawn by
Author

EHDD Job Number
KLA 20-2266

Sheet Title
MECHANICAL - GREEN BUILDING NOTES

Sheet Number
M0.03 V3

C:\Users\o.garcia\Documents\20251 CSUS Child Development MP 19_o.garcia@rexusengineering.net.rvt

12/8/2021 2:01:04 PM

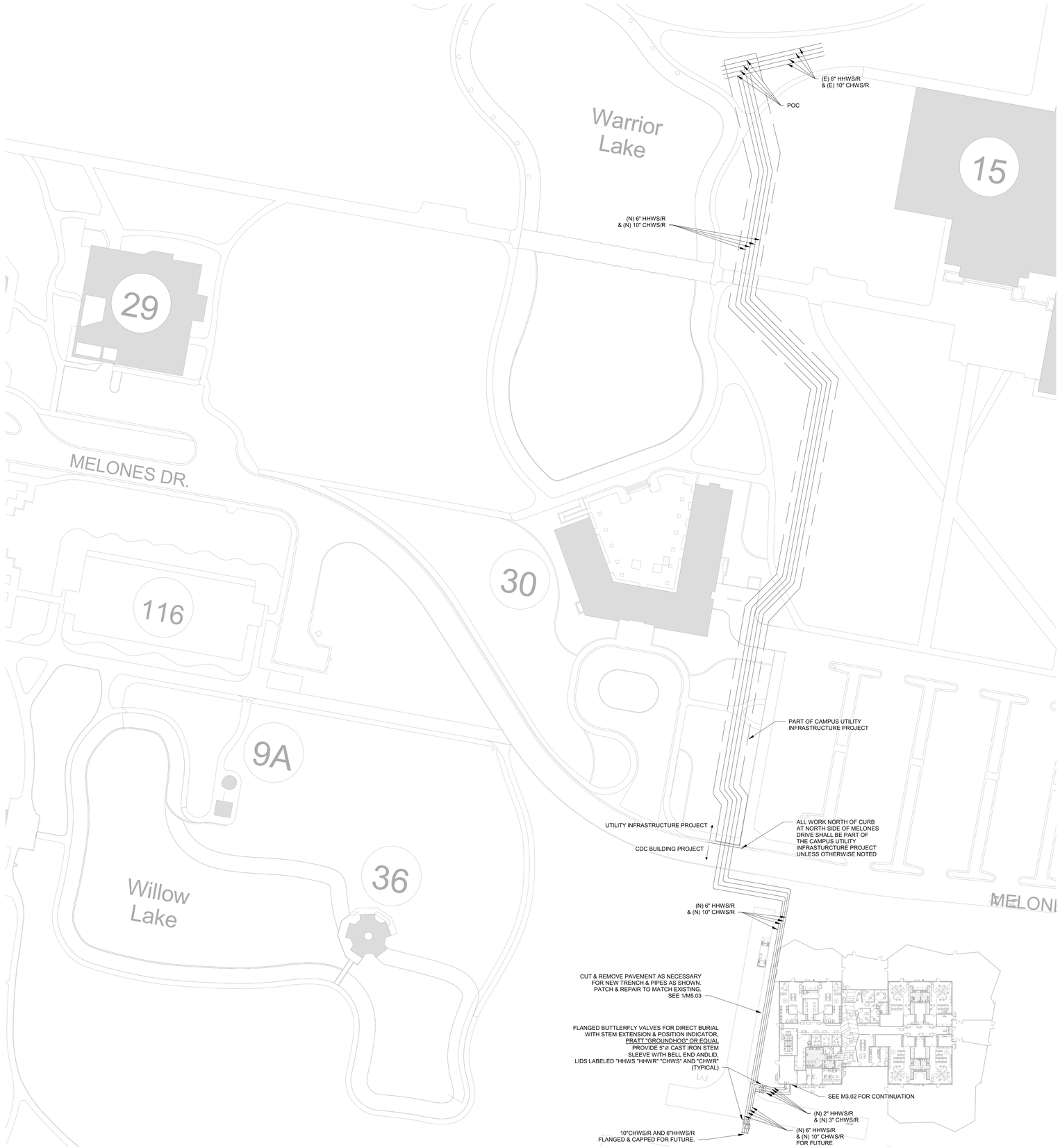

1 M1.01 MECHANICAL - SITE PLAN
SCALE: 1" = 40'-0"

40' 20' 0' 40' 80'

SHEET NOTES

1) ALL WORK THIS SHEET BY U.G. CONTRACTOR

2) PIPE TRENCH ROUTING IS APPROXIMATE. THE CONTRACTOR'S PROPOSED ACTUAL ROUTING SHALL MINIMIZE COSTS WHERE POSSIBLE AND SHALL BE VERIFIED WITH THE OWNER'S REPRESENTATION PRIOR TO WORK.

3) THE CONTRACTOR'S BID SHALL INCLUDE ALL WORK REQUIRED TO REMOVE AND REPLACE OR RELOCATE ALL IRRIGATION & LIGHTING YARD BOXES, AREA DRAIN LINES, AND ANY OTHER UTILITIES OR LANDSCAPING FEATURES ENCOUNTERD ALONG THE ROUTE THAT CANNOT REMAIN IN PLACE DURING THE WORK.

4) ALL DISTURBED SURFACES SHALL BE RESTORED TO THEIR ORIGINAL CONDITION, EXCEPT AS NOTED.

5) CONTRACTOR SHALL TAKE ALL NECESSARY PRECAUTIONS TO LOCATED AND AVOID DAMAGE TO EXISTING UTILITES. THE CONTRACTOR'S FINAL AS BUILT MARKUPS SHALL INCLUDE LOCATION AND DEPTH OF ALL UTILITES DISCOVERD, BOTH RELOCATED AND UNDISTURBED, FOR FUTURE REFERENCE.

Division of the State Architect

APPROVED
DIV. OF THE STATE ARCHITECT
APP: 02-119316 INC:
REVIEWED FOR
SS☐ FLS☐ ACS☑
DATE: 03/24/2022

Office of the State Fire Marshal

OFFICE OF THE STATE FIRE MARSHAL
APPROVED FIRE AND PANIC ONLY
03/14/22
21-0498
Approval of this plan does not authorize or approve any omission or deviation from applicable regulations. Final approval is subject to field inspection. One set of approved plans shall be available on the project site at all times.

CSUS CHILD DEVELOPMENT CENTER

CALIFORNIA STATE
UNIVERSITY, STANISLAUS
ONE UNIVERSITY CIRCLE
TURLOCK, CA 95382

ehdd.

PIER 1, BAY 2
THE EMBARCADERO
SAN FRANCISCO, CA 94111

INFO@EHDD.COM
+1 415-285-9193

Consultant

neXus engineering
Consulting Mechanical Engineers
1400 Lone Palm Ave, Suite A
Modesto, CA 95351
Tel: 209.572.7399 Fax: 209.236.1579
www.nexusengineering.net
HVAC , Plumbing/Piping , Fire Sprinklers
Process/Plant Engineering , Refrigeration

Stamp

REGISTERED PROFESSIONAL ENGINEER
LEN LAVAY
No. 23109
MECHANICAL
STATE OF CALIFORNIA

Printing	Date
95% CONSTRUCTION DOCUMENTS	06.25.2021
PERMIT SET	08.16.2021
PERMIT SET - DSA V2	12.15.2021
PERMIT SET - SFM	12.21.2021

Revisions and Description	Date

Scale
As indicated

Drawn by
GL

EHDD Job Number
KLA 20-2266

Sheet Title
MECHANICAL - SITE PLAN

Sheet Number
M1.01 V3

C:\Users\o.garcia\Documents\20251 CSUS Child Development MP 19_o.garcia@nexusengineering.net.rvt

12/8/2021 2:01:10 PM

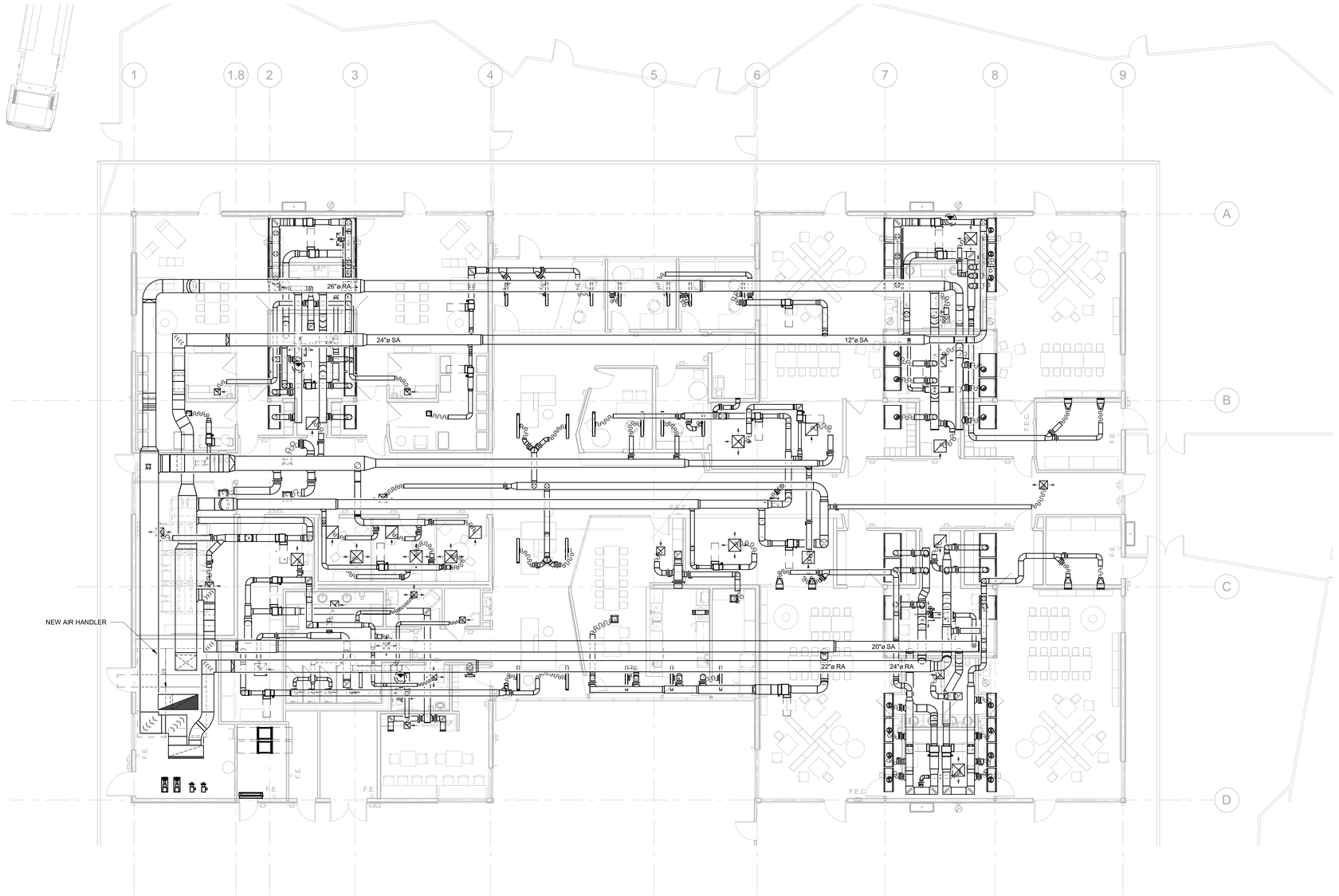

1 M2.01 MECHANICAL - OVERALL FLOOR PLAN
SCALE: 1/8" = 1'-0"

8' 0' 8' 16'

C:\Users\o.garcia\Documents\20251 CSUS Child Development MP 19_o.garcia@nexusengineering.net.rvt

Division of the State Arch.

APPROVED
DIV. OF THE STATE ARCHITECT
APP: 02-119316 INC:
REVIEWED FOR
SS☐ FLS☐ ACS☑
DATE: 03/24/2022

Office of the State Fire Marshal

OFFICE OF THE STATE FIRE MARSHAL
APPROVED FIRE AND PANIC ONLY
03/14/22
21-0498
Approval of this plan does not authorize or approve any omission or deviation from applicable requirements. Final approval is subject to field inspection. One set of approved plans shall be available on the project site at all times.

CSUS CHILD DEVELOPMENT CENTER

CALIFORNIA STATE
UNIVERSITY, STANISLAUS
ONE UNIVERSITY CIRCLE
TURLOCK, CA 95382

ehdd.

PIER 1, BAY 2
THE EMBARCADERO
SAN FRANCISCO, CA 94111

INFO@EHDD.COM
+1 415-285-9193

Consultant

neXus engineering
Consulting Mechanical Engineers
1400 Lone Palm Ave, Suite A
Modesto, CA 95351
Tel: 209.572.7399 Fax: 209.236.1579
www.nexusengineering.net
HVAC , Plumbing/Piping , Fire Sprinklers
Process/Plant Engineering , Refrigeration

Stamp

Printing	Date
95% CONSTRUCTION DOCUMENTS	06.25.2021
PERMIT SET	08.16.2021
PERMIT SET - DSA V2	12.15.2021
PERMIT SET - SFM	12.21.2021

Revisions and Description	Date

Scale
1/8" = 1'-0"

Drawn by
GL

EHDD Job Number
KLA 20-2266

Sheet Title
MECHANICAL - OVERALL HVAC FLOOR PLAN

Sheet Number
M2.01 V3

12/8/2021 2:01:16 PM

C:\Users\o.garcia\Documents\20251 CSUS Child Development MP 19_o.garcia@nexusengineering.net.rvt

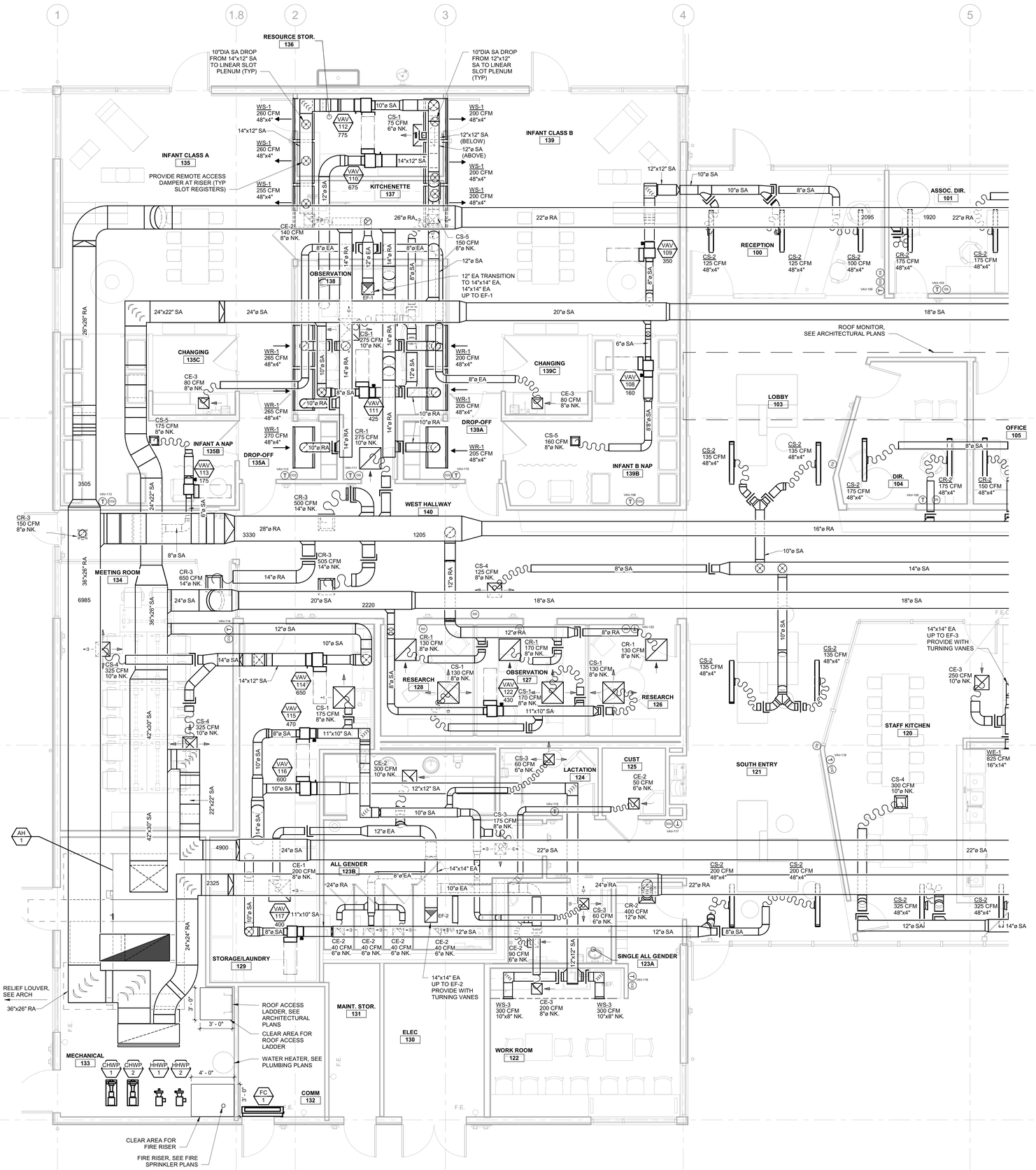

1 M2.02 MECHANICAL - HVAC FLOOR PLAN - A
SCALE: 1/4" = 1'-0"

4' 0' 4' 8'

SHEET NOTES

1. SEE A6.01 FOR REFLECTED CEILING PLAN.

Division of the State Arch

APPROVED
DIV. OF THE STATE ARCHITECT
APP: 02-119316 INC:
REVIEWED FOR
SS☐ FLS☐ ACS☑
DATE: 03/24/2022

Office of the State Fire Marshal

OFFICE OF THE STATE FIRE MARSHAL
APPROVED FIRE AND PANIC ONLY
03/14/22
21-0498
Approval of this plan does not authorize or approve any omission or deviation from applicable regulations. Final approval is subject to field inspection. One set of approved plans shall be available on the project site at all times.

CSUS CHILD DEVELOPMENT CENTER

CALIFORNIA STATE UNIVERSITY, STANISLAUS
ONE UNIVERSITY CIRCLE
TURLOCK, CA 95382

ehdd.

PIER 1, BAY 2
THE EMBARCADERO
SAN FRANCISCO, CA 94111

INFO@EHDD.COM
+1 415-285-9193

Consultant

neXus engineering
Consulting Mechanical Engineers
1400 Lone Palm Ave, Suite A
Modesto, CA 95351
Tel: 209.572.7399 Fax: 209.236.1579
www.nexusengineering.net
HVAC . Plumbing/Piping . Fire Sprinklers
Process/Plant Engineering . Refrigeration

Stamp

REGISTERED PROFESSIONAL ENGINEER
ALLEN LAYMAN
MECHANICAL
STATE OF CALIFORNIA

Printing	Date
95% CONSTRUCTION DOCUMENTS	06.25.2021
PERMIT SET	08.16.2021
PERMIT SET - DSA V2	12.15.2021
PERMIT SET - SFM	12.21.2021

Revisions and Description	Date

Scale
1/4" = 1'-0"

Drawn by
GL

EHDD Job Number
KLA 20-2266

Sheet Title
MECHANICAL - ENLARGED HVAC FLOOR PLAN

Sheet Number
M2.02 V3

12/8/2021 2:01:22 PM

C:\Users\o.garcia\Documents\20251 CSUS Child Development MP 19_o.garcia@nexusengineering.net.rvt

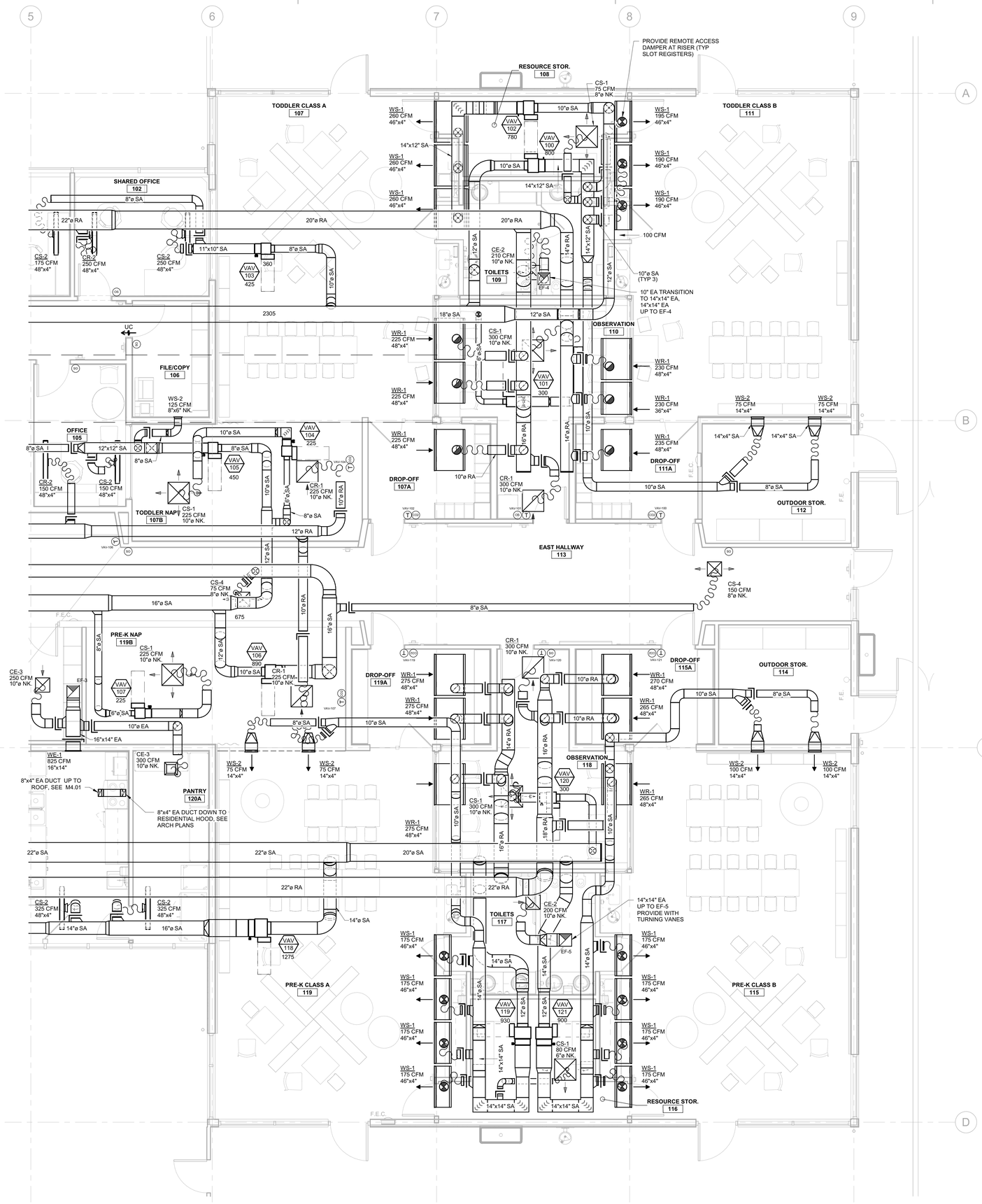

1 M2.03 MECHANICAL - HVAC FLOOR PLAN - B
SCALE: 1/4" = 1'-0"

4' 0' 4' 8'

SHEET NOTES

1. SEE A6.01 FOR REFLECTED CEILING PLAN.

Division of the State Arch

APPROVED
DIV. OF THE STATE ARCHITECT
APP: 02-119316 INC:
REVIEWED FOR
SS ☐ FLS ☐ ACS ☑
DATE: 03/24/2022

Office of the State Fire Marshal

OFFICE OF THE STATE FIRE MARSHAL
APPROVED FIRE AND PANIC ONLY
03/14/22
21-0498
Approval of this plan does not authorize or approve any omission or deviation from applicable regulations. Final approval is subject to field inspection. One set of approved plans shall be available on the project site at all times.

CSUS CHILD DEVELOPMENT CENTER

CALIFORNIA STATE UNIVERSITY, STANISLAUS
ONE UNIVERSITY CIRCLE
TURLOCK, CA 95382

ehdd.

PIER 1, BAY 2
THE EMBARCADERO
SAN FRANCISCO, CA 94111

INFO@EHDD.COM
+1 415-285-9193

Consultant

neXus engineering
Consulting Mechanical Engineers
1400 Lone Palm Ave, Suite A
Modesto, CA 95351
Tel: 209.572.7399 Fax: 209.236.1579
www.nexusengineering.net
HVAC . Plumbing/Piping . Fire Sprinklers
Process/Plant Engineering . Refrigeration

Stamp

REGISTERED PROFESSIONAL ENGINEER
ALLEN LAYMAN
MECHANICAL
STATE OF CALIFORNIA

Printing	Date
95% CONSTRUCTION DOCUMENTS	06.25.2021
PERMIT SET	08.16.2021
PERMIT SET - DSA V2	12.15.2021
PERMIT SET - SFM	12.21.2021

Revisions and Description	Date

Scale
1/4" = 1'-0"

Drawn by
GL

EHDD Job Number
KLA 20-2266

Sheet Title
MECHANICAL - ENLARGED HVAC FLOOR PLAN

Sheet Number
M2.03 V3

12/8/2021 2:01:25 PM

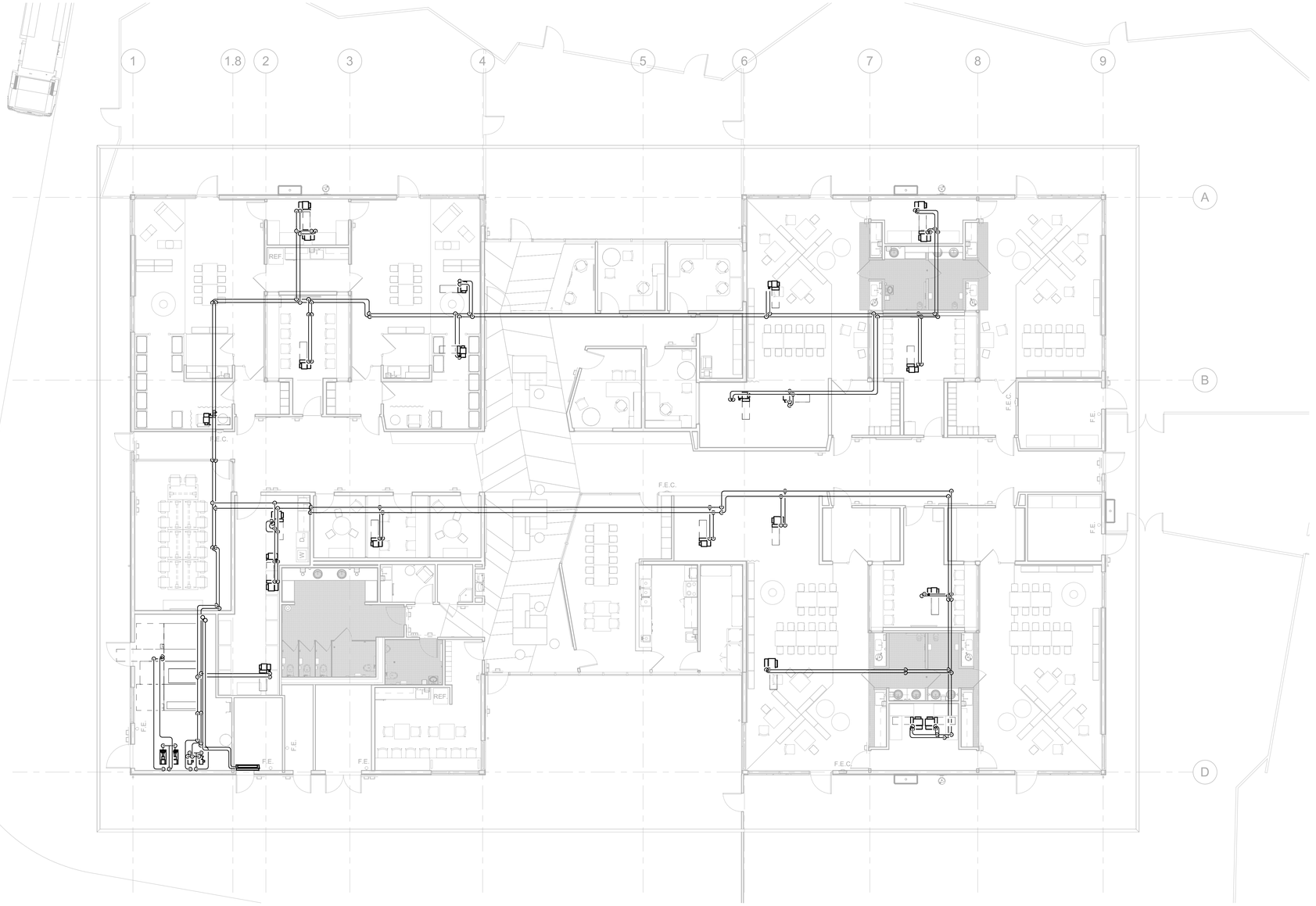

1 M3.01 MECHANICAL - OVERALL HVAC PIPING FLOOR PLAN
SCALE: 1/8" = 1'-0"

8' 0' 8' 16'

Division of the State Architect

APPROVED
DIV. OF THE STATE ARCHITECT
APP: 02-119316 INC:
REVIEWED FOR
SS☐ FLS☐ ACS☑
DATE: 03/24/2022

Office of the State Fire Marshal

OFFICE OF THE STATE FIRE MARSHAL
APPROVED FIRE AND PANIC ONLY
03/14/22
21-0498
Approval of this plan does not authorize or approve any omission or deviation from applicable regulations. Final approval is subject to field inspection. One set of approved plans shall be available on the project site at all times.

CSUS CHILD DEVELOPMENT CENTER

CALIFORNIA STATE
UNIVERSITY, STANISLAUS
ONE UNIVERSITY CIRCLE
TURLOCK, CA 95382

ehdd.

PIER 1, BAY 2
THE EMBARCADERO
SAN FRANCISCO, CA 94111

INFO@EHDD.COM
+1 415-285-9193

Consultant

neXus engineering
Consulting Mechanical Engineers
1400 Lone Palm Ave, Suite A
Modesto, CA 95351
Tel: 209.572.7399 Fax: 209.236.1579
www.nexusengineering.net
HVAC , Plumbing/Piping , Fire Sprinklers
Process/Plant Engineering , Refrigeration

Stamp

REGISTERED PROFESSIONAL ENGINEER
LON LAWRENCE
No. M 24762
MECHANICAL
STATE OF CALIFORNIA

Printing	Date
95% CONSTRUCTION DOCUMENTS	06.25.2021
PERMIT SET	08.16.2021
PERMIT SET - DSA V2	12.15.2021
PERMIT SET - SFM	12.21.2021

Revisions and Description	Date

Scale
1/8" = 1'-0"

Drawn by
GL

EHDD Job Number
KLA 20-2266

Sheet Title
MECHANICAL - OVERALL HVAC PIPING FLOOR PLAN

Sheet Number
M3.01 V3

C:\Users\o.garcia\Documents\202251 CSUS Child Development MP 19_o.garcia@nexusengineering.net.rvt

12/8/2021 2:01:28 PM

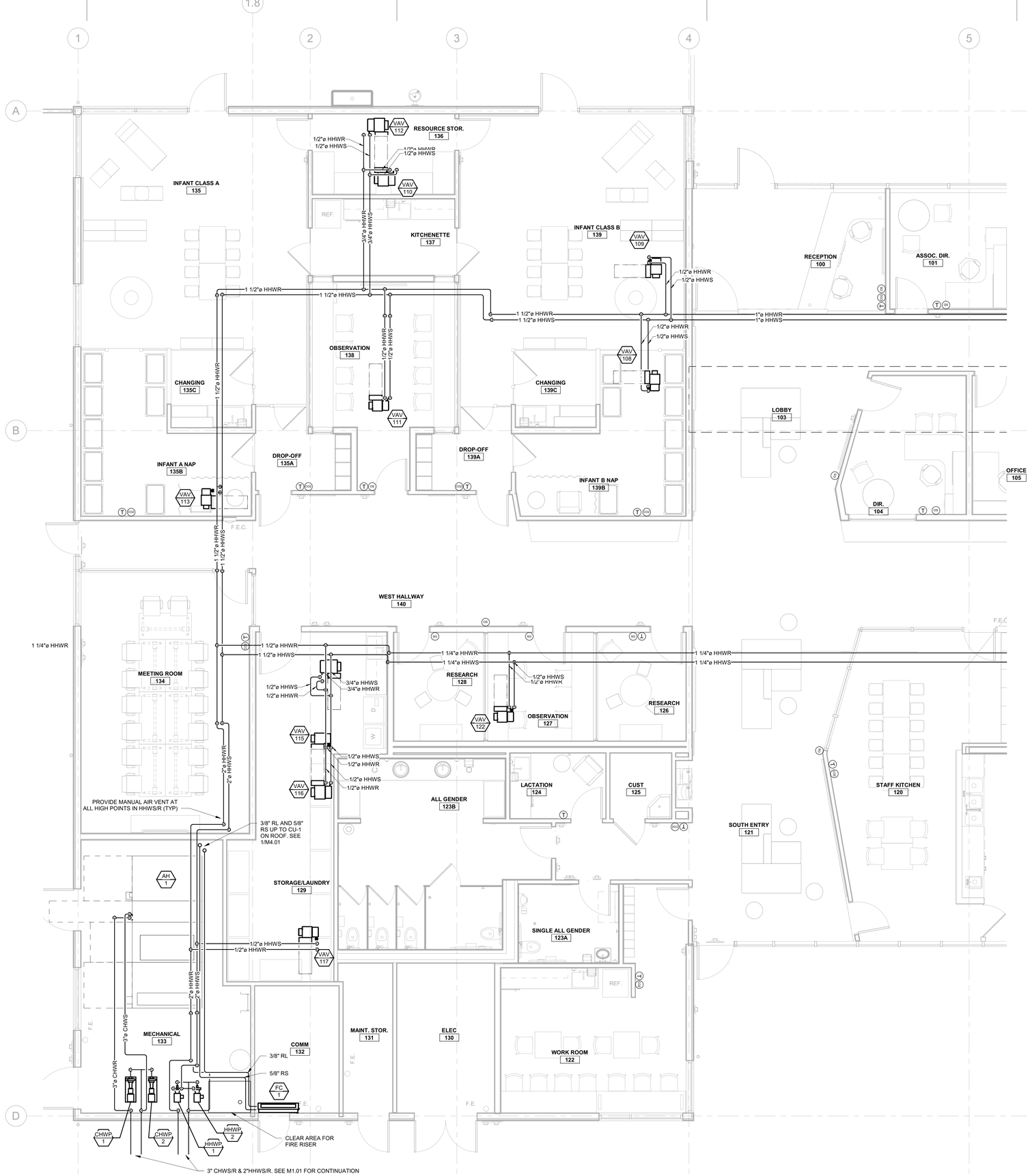

1 M3.02 MECHANICAL - HVAC PIPING FLOOR PLAN - A

SCALE: 1/4" = 1'-0"

4' 0' 4' 8'

C:\Users\o.garcia\Documents\20251 CSUS Child Development MP 19_o.garcia@nexusengineering.net.rvt

Division of the State Arch.

APPROVED
DIV. OF THE STATE ARCHITECT
APP: 02-119316 INC:
REVIEWED FOR
SS☐ FLS☐ ACS☑
DATE: 03/24/2022

Office of the State Fire Marshal

OFFICE OF THE STATE FIRE MARSHAL
APPROVED FIRE AND PANIC ONLY
03/14/22
21-0498
Approval of this plan does not authorize or approve any omission or deviation from applicable regulations. Final approval is subject to field inspection. One set of approved plans shall be available on the project site at all times.

CSUS CHILD DEVELOPMENT CENTER

CALIFORNIA STATE
UNIVERSITY, STANISLAUS
ONE UNIVERSITY CIRCLE
TURLOCK, CA 95382

ehdd.

PIER 1, BAY 2
THE EMBARCADERO
SAN FRANCISCO, CA 94111

INFO@EHDD.COM
+1 415-285-9193

Consultant

neXus engineering
Consulting Mechanical Engineers
1400 Lone Palm Ave, Suite A
Modesto, CA 95351
Tel: 209.572.7399 Fax: 209.236.1579
www.nexusengineering.net
HVAC . Plumbing/Piping . Fire Sprinklers
Process/Plant Engineering . Refrigeration

Stamp

REGISTERED PROFESSIONAL ENGINEER
LEN LAVAGNINO
No. 25966
MECHANICAL
STATE OF CALIFORNIA

Printing	Date
95% CONSTRUCTION DOCUMENTS	06.25.2021
PERMIT SET	08.16.2021
PERMIT SET - DSA V2	12.15.2021
PERMIT SET - SFM	12.21.2021

Revisions and Description	Date

Scale
1/4" = 1'-0"

Drawn by
GL

EHDD Job Number
KLA 20-2266

Sheet Title
MECHANICAL - ENLARGED HVAC PIPING FLOOR PLAN

Sheet Number
M3.02 V3

12/8/2021 2:01:31 PM

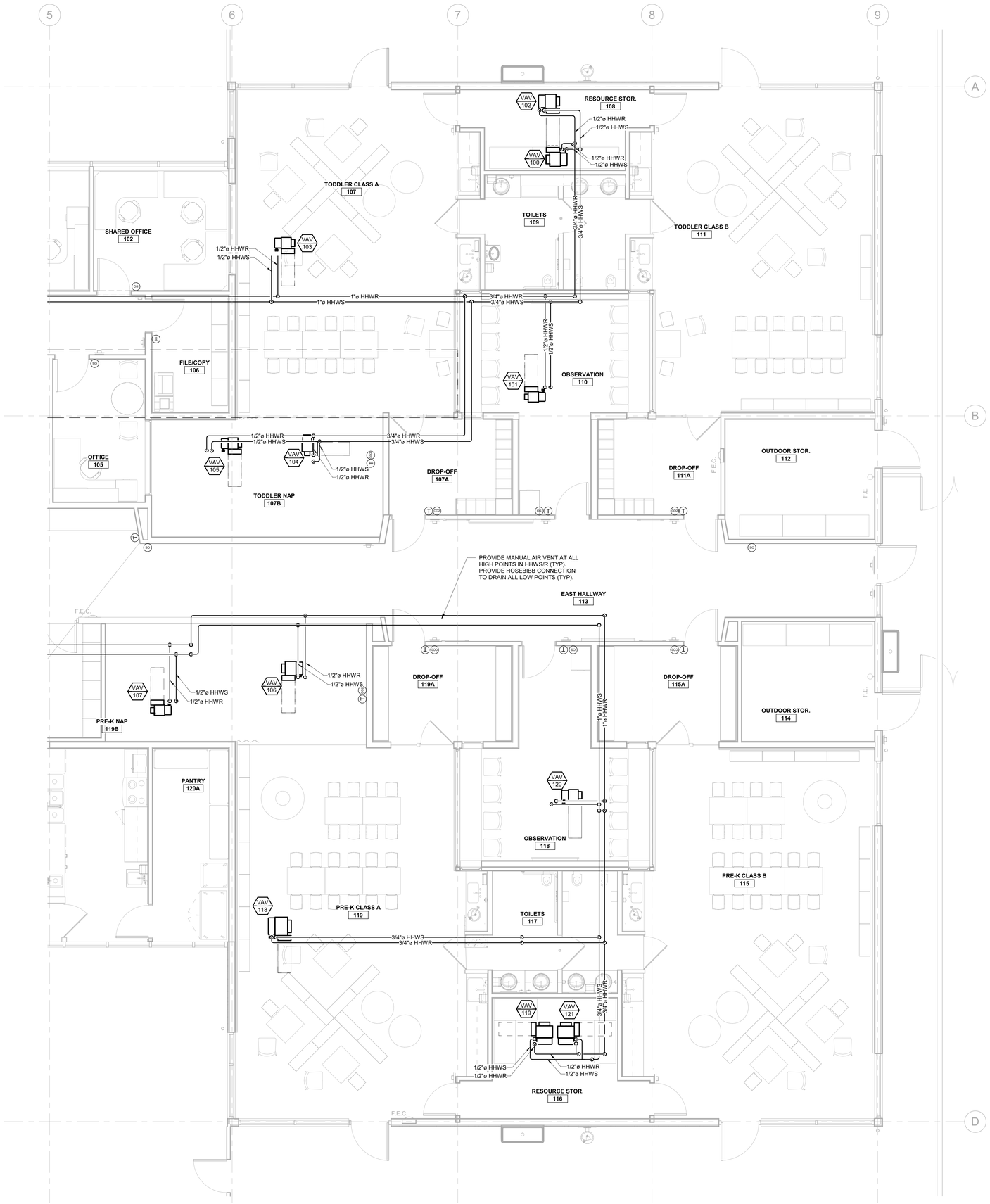

1 M3.03 MECHANICAL - HVAC PIPING FLOOR PLAN - B

SCALE: 1/4" = 1'-0"

4' 0' 4' 8'

APPROVED
DIV. OF THE STATE ARCHITECT
APP: 02-119316 INC:
REVIEWED FOR
SS☐ FLS☐ ACS☑
DATE: 03/24/2022

Division of the State Architect

Office of the State Fire Marshal

OFFICE OF THE STATE FIRE MARSHAL APPROVED FIRE AND PANIC ONLY

03/14/22

21-0498

Approval of this plan does not authorize or approve any omission or deviation from applicable regulations. Final approval is subject to field inspection. One set of approved plans shall be available on the project site at all times.

CSUS CHILD DEVELOPMENT CENTER

CALIFORNIA STATE UNIVERSITY, STANISLAUS
ONE UNIVERSITY CIRCLE
TURLOCK, CA 95382

ehdd.

PIER 1, BAY 2
THE EMBARCADERO
SAN FRANCISCO, CA 94111

INFO@EHDD.COM
+1 415-285-9193

Consultant

neXus engineering
Consulting Mechanical Engineers
1400 Lone Palm Ave, Suite A
Modesto, CA 95351
Tel: 209.572.7399 Fax: 209.236.1579
www.nexusengineering.net
HVAC , Plumbing/Piping , Fire Sprinklers
Process/Plant Engineering , Refrigeration

Stamp

LICENSED PROFESSIONAL ENGINEER
I.N. LAM
No. M29966
MECHANICAL
STATE OF CALIFORNIA

Printing	Date
95% CONSTRUCTION DOCUMENTS	06.25.2021
PERMIT SET	08.16.2021
PERMIT SET - DSA V2	12.15.2021
PERMIT SET - SFM	12.21.2021

Revisions and Description | Date

Scale
1/4" = 1'-0"

Drawn by
GL

EHDD Job Number
KLA 20-2266

Sheet Title
MECHANICAL - ENLARGED HVAC PIPING FLOOR PLAN

Sheet Number
M3.03 V3

C:\Users\o.garcia\Documents\20251 CSUS Child Development MP 19_o.garcia@nexusengineering.net.rvt

12/8/2021 2:01:31 PM

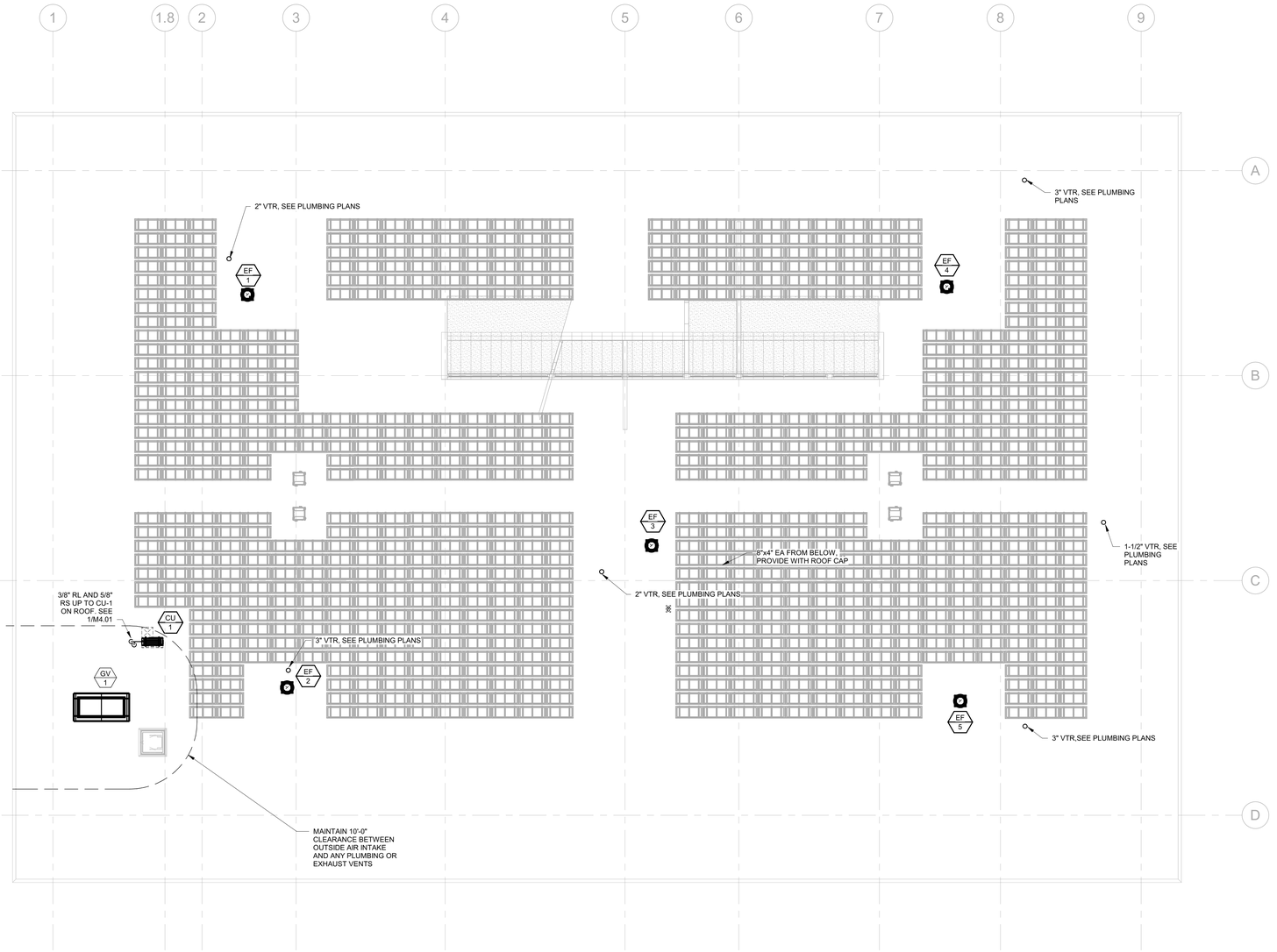

1 M4.01 MECHANICAL - ROOF PLAN

SCALE: 1/8" = 1'-0"

8' 0' 8' 16'

Division of the State Arch.

APPROVED
DIV. OF THE STATE ARCHITECT
APP: 02-119316 INC:
REVIEWED FOR
SS☐ FLS☐ ACS☑
DATE: 03/24/2022

Office of the State Fire Marshal

OFFICE OF THE STATE FIRE MARSHAL
APPROVED FIRE AND PANIC ONLY
03/14/22
21-0498
Approval of this plan does not authorize or approve any omission or deviation from applicable regulations. Final approval is subject to field inspection. One set of approved plans shall be available on the project site at all times.

CSUS CHILD DEVELOPMENT CENTER

CALIFORNIA STATE
UNIVERSITY, STANISLAUS
ONE UNIVERSITY CIRCLE
TURLOCK, CA 95382

ehdd.

PIER 1, BAY 2
THE EMBARCADERO
SAN FRANCISCO, CA 94111

INFO@EHDD.COM
+1 415-285-9193

Consultant

neXus engineering
Consulting Mechanical Engineers
1400 Lone Palm Ave, Suite A
Modesto, CA 95351
Tel: 209.572.7399 Fax: 209.236.1579
www.nexusengineering.net
HVAC , Plumbing/Piping , Fire Sprinklers
Process/Plant Engineering , Refrigeration

Stamp

REGISTERED PROFESSIONAL ENGINEER
LON LAWRENCE MARTIN
No. M 24262
MECHANICAL
STATE OF CALIFORNIA

Printing	Date
95% CONSTRUCTION DOCUMENTS	06.25.2021
PERMIT SET	08.16.2021
PERMIT SET - DSA V2	12.15.2021
PERMIT SET - SFM	12.21.2021

Revisions and Description	Date

Scale
1/8" = 1'-0"

Drawn by
GL

EHDD Job Number
KLA 20-2266

Sheet Title
MECHANICAL - ROOF PLAN

Sheet Number
M4.01 V3

C:\Users\o.garcia\Documents\202251 CSUS Child Development MP 19_o.garcia@nexusengineering.net.rvt

12/8/2021 2:01:32 PM

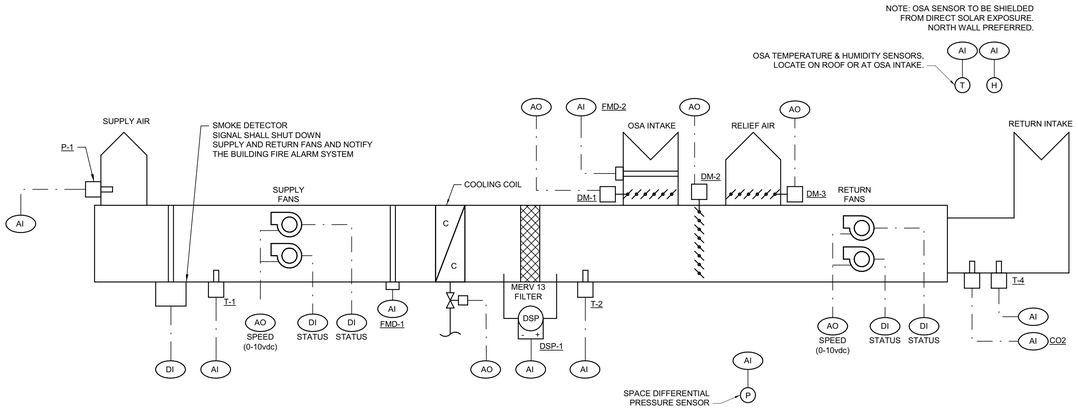

NOTE: FACTORY FANS DO NOT HAVE STATUS POINT. PROVIDE FIELD INSTALLED CURRENT MONITORING DEVICE FOR STATUS OF EACH FAN.

1 M5.01 AH-1 CONTROL DIAGRAM

SCALE: NONE

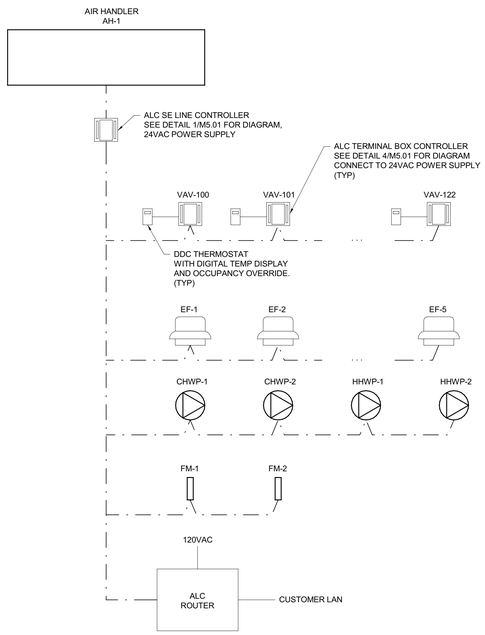

NOTE: SYSTEM ARCHITECTURE IS FOR REFERENCE ONLY.
THE EXACT SYSTEM ARCHITECTURE SHALL BE DETERMINED BY THE CONTROLS CONTRACTOR AS REQUIRED TO LIMIT THE QUANTITY AND WIRING OF DEVICES WHILE INTEGRATING WITH THE EXISTING SYSTEM AND ACCOMPLISHING THE NECESSARY FUNCTIONS DETAILED IN THESE DRAWINGS.

2 M5.01 TYPICAL CONTROL SYSTEM ARCHITECTURE

SCALE: NONE

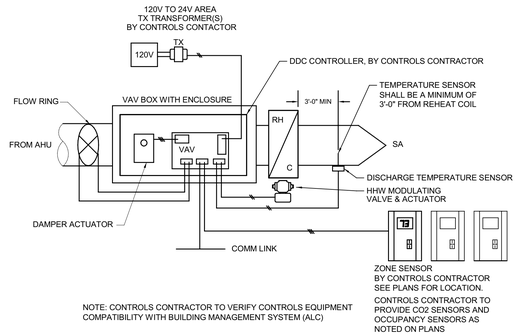

NOTE: CONTROLS CONTRACTOR TO VERIFY CONTROLS EQUIPMENT COMPATIBILITY WITH BUILDING MANAGEMENT SYSTEM (ALC)

3 M5.01 TYPICAL CAV BOX CONTROL DIAGRAM

SCALE: NONE

SEQUENCE OF OPERATION

THE AIR HANDLER & VAV BOXES SHALL BE CONNECTED TO, AND CONTROLLED BY, AN "ALC" DDC CONTROL SYSTEM ("BMS"), INCLUDING ALL DEVICES AND ACCESSORIES NECESSARY TO ACCOMPLISH THE FUNCTIONS DESCRIBED IN THE SEQUENCE OF OPERATIONS. THE CONTROL SYSTEM SHALL BE CONNECTED TO THE CAMPUS NETWORK.

AIR HANDLER (AH-1):

THE AIR HANDLER SHALL OPERATE AS A VAV SYSTEM WITH CHILLED WATER COOLING AND ZONE LEVEL HOT WATER HEATING, AND IT SHALL OPERATE CONTINUOUSLY DURING BUILDING OCCUPANCY, ACCORDING TO THE ESTABLISHED SCHEDULE, AND DURING OCCUPANCY OVERRIDE.

MODES OF OPERATION:
IN OCCUPIED MODE, THE SUPPLY AND RETURN FANS SHALL RUN CONTINUOUSLY AND THE COOLING AND HEATING SHALL OPERATE BASED ON THE RESPECTIVE SEQUENCES.
IN UNOCCUPIED MODE, THE FANS SHALL BE DISABLED AND OSA DAMPER CLOSED. IF ANY ZONE TEMPERATURE IS MEASURED OUTSIDE THE SETBACK TEMPERATURE RANGE, THE UNIT SHALL START AND COOLING OR HEATING SHALL MODULATE TO MAINTAIN THE SETBACK TEMPERATURE. IF ANY ZONE CALLS FOR OCCUPANCY OVERRIDE, OR IF ANY OCCUPANCY SENSOR ZONE CONTACTS ARE CLOSED, THE CORRESPONDING UNIT FANS SHALL START, AND THE OSA DAMPER AND HEATING OR COOLING SHALL OPERATE AS IF OCCUPIED UNTIL THE CALL IS RETRACTED (MINIMUM 15 MINUTE TIMER).
PRE-OCCUPANCY WARM-UP/COOL-DOWN/PURGE: PRIOR TO A SCHEDULED RETURN TO OCCUPIED MODE, THE UNIT SHALL START AT THE OPTIMAL TIME TO REACH THE TEMPERATURE SET POINT ON SCHEDULE, BUT NO LESS THAN 20 MINUTES AT MINIMUM VENTILATION (3 AIR CHANGES).

SUPPLY FANS:
THE SUPPLY FANS MOTORIZED IMPELLERS SHALL MODULATE FAN SPEEDS TOGETHER (SINGLE 0-10VDC SIGNAL) AS NEEDED TO MEET THE SUPPLY DUCT STATIC PRESSURE SET POINT. INDIVIDUAL FAN STATUS SHALL BE MONITORED WITH A FIELD INSTALLED CURRENT SENSOR AND SHALL INDICATE ALARM SEPARATELY.

RETURN FANS:
THE RETURN FANS MOTORIZED IMPELLERS SHALL MODULATE FAN SPEEDS TOGETHER (SINGLE 0-10VDC SIGNAL) AS NEEDED TO MEET THE BUILDING STATIC PRESSURE SET POINT (+0.03" W.C. ADJUSTABLE). INDIVIDUAL FAN STATUS SHALL BE MONITORED WITH A FIELD INSTALLED CURRENT SENSOR AND SHALL INDICATE ALARM SEPARATELY.

COOLING SEQUENCE:
THE COOLING SEQUENCE SHALL BE ENABLED WHEN ANY VAV BOX REACHES 100% OF ITS MAXIMUM AIRFLOW, AND THE COOLING COIL MODULATING VALVE SHALL CONTROL WATER FLOW TO MEET THE INITIAL SUPPLY AIR TEMPERATURE SET POINT OF 60°F. AFTER A DELAY, IF ANY VAV BOX REACHES 100% OF MAXIMUM AIRFLOW, THE SUPPLY AIR TEMPERATURE SHALL DECREASE (LIMIT 55°F). IF ALL VAV BOXES REACH LESS THAN 80% OF MAX AIRFLOW, THE SUPPLY AIR TEMPERATURE SHALL INCREASE (LIMIT 65°F). SEE HUMIDITY CONTROL SEQUENCE AND ECONOMIZING SEQUENCE BELOW.

HUMIDITY CONTROL:
WHILE THE OUTDOOR DEW POINT EXCEEDS 55°F, THE SUPPLY AIR SET POINT SHALL BE OVERRIDDEN TO 55°F.

ECONOMIZING AND DEMAND CONTROL VENTILATION:
AIR WILL BE DRAWN FROM OUTDOORS AT A MINIMUM VOLUME PER THE AIR HANDLER SCHEDULE. OUTDOOR AIRFLOW RATE SHALL BE MONITORED BY THE BMS. A MOTORIZED DAMPER IN THE OUTSIDE AIR DUCT SHALL MODULATE TO MAINTAIN THE VENTILATION AIRFLOW SET POINT. (INPUT TO BE PROVIDED BY THE OSA MEASURING SENSOR) ECONOMIZING CONTROLS WILL MONITOR AMBIENT DRY BULB TEMPERATURE AND WILL MODULATE THE OUTDOOR AIR DAMPER AS NECESSARY TO MAXIMIZE ENERGY SAVINGS. IF THE SPACE CO2 LEVEL EXCEEDS 1000PPM, THE AIR HANDLER OUTDOOR AIR DAMPER SHALL MODULATE AS NECESSARY TO MAINTAIN THE 1000PPM MAXIMUM.

FREEZE PROTECTION:
IF THE MIXED AIR TEMPERATURE FALLS BELOW 35°F (INPUT T-2), THE CHILLED WATER COIL VALVE SHALL FULLY OPEN.

SMOKE DETECTOR SHUTDOWN:
THE SMOKE DETECTOR LOCATED IN THE SUPPLY DUCT WILL BE HARD-WIRED TO THE UNIT CONTROL PANEL AND INTERCONNECTED TO THE BUILDING FIRE ALARM SYSTEM. UPON DETECTION OF THE PRODUCTS OF COMBUSTION, THE UNIT SHALL SHUT DOWN.

ZONE VAV TERMINAL BOXES (VAV-100 THRU VAV-122)

THE TERMINAL BOX DAMPER SHALL BE CONTROLLED TO MEET THE ROOM TEMPERATURE SET POINT.

HEATING MODE:
FIRST STAGE: MODULATE SUPPLY AIR TEMPERATURE TO A MAXIMUM OF 95F WHILE MINIMUM AIRFLOW IS MAINTAINED.
SECOND STAGE: MODULATE SUPPLY AIRFLOW FROM MINIMUM TO MAXIMUM HEATING AIRFLOW RATE. SEE VAV BOX SCHEDULE FOR AIRFLOW RATES.

COOLING MODE:
MODULATE SUPPLY AIRFLOW FROM MINIMUM TO MAXIMUM COOLING AIRFLOW RATE. SEE VAV BOX SCHEDULE FOR AIRFLOW RATES.

DISCHARGE AIR TEMPERATURE SHALL BE MONITORED.

OCCUPANCY SENSOR ZONE CONTROL:
EACH ZONE WITH OCCUPANCY SENSORS SHALL BE PLACED IN "OCCUPIED STANDBY MODE" WHEN ALL ROOMS SERVED BY THE ZONE ARE UNOCCUPIED FOR MORE THAN 5 MINUTES.

DURING OCCUPIED STANDBY MODE:
AUTOMATICALLY SET UP THE OPERATING COOLING TEMPERATURE SETPOINT BY 0.5F AND SETBACK THE OPERATING HEATING TEMPERATURE SETPOINT BY 0.5F

BUILDING HVAC PUMPS (HHWP-1, HHWP-2, CHWP-1, CHWP-2, & FM-1)

THE HYDRONIC PUMPS (CHWP-1/CHWP-2 AND HHWP-1/HHWP-2) SHALL REMAIN NORMALLY OFF. BUILDING HHW AND CHW DIFFERENTIAL PRESSURE SHALL BE MONITORED.

CHWP-1/CHWP-2 : CHWP-1 AND CHWP-2 SHALL BE OPERATED AS REDUNDANT. THE BMS SHALL ALTERNATE THE ACTIVE PUMP ON A WEEKLY BASIS. IF THE AIR HANDLER COOLING COIL CONTROL VALVE IS COMMANDED MORE THAN 90% OPEN, START THE ACTIVE PUMP AT MINIMUM SPEED. IF THE CONTROL VALVE REACHES 100% OPEN INCREASE PUMP SPEED. IF THE CONTROL VALVE IS COMMANDED LESS THAN 50% OPEN REDUCE PUMP SPEED. IF THE CONTROL VALVE IS COMMANDED LESS THAN 10% OPEN, STOP THE PUMP.

HHWP-1/HHWP-2 : HHWP-1 AND HHWP-2 SHALL BE OPERATED AS REDUNDANT. THE BMS SHALL ALTERNATE THE ACTIVE PUMP ON A WEEKLY BASIS. IF ANY REHEAT COIL CONTROL VALVE IS COMMANDED MORE THAN 90% OPEN, START THE PUMP AT MINIMUM SPEED. IF ANY CONTROL VALVE REACHES 100% OPEN INCREASE PUMP SPEED. IF ALL CONTROL VALVES ARE COMMANDED LESS THAN 50% OPEN REDUCE PUMP SPEED. IF ALL CONTROL VALVES ARE COMMANDED LESS THAN 10% OPEN, STOP THE PUMP.

FM-1 (x2): FLOW METERS SHALL MEASURE CHWS AND HHWS FLOW AND SEND A SIGNAL TO BMS. BMS SHALL DISPLAY FLOW AND BE CAPABLE OF TOTALING FLOW OVER A PERIOD OF TIME DETERMINED BY OWNER. BMS SHALL PROVIDE AN ALARM IF FLOW METER DETECTS AN EMPTY PIPE.

BUILDING EXHAUST FANS (EF-1 THRU EF-5)

DURING OCCUPIED MODE THE BUILDING EXHAUST FANS SHALL OPERATE CONTINUOUSLY AT A CONSTANT SPEED. DURING UNOCCUPIED MODE THE BUILDING EXHAUST FANS SHALL BE OFF. DURING OCCUPANCY OVERRIDE, PLANNED RETURN TO OCCUPANCY, OR ANY OTHER TIME THE AIR HANDLER SUPPLY FANS ARE ENABLED, THE BUILDING EXHAUST FANS SHALL BE ON.

ALL EXHAUST FANS SHALL BE CONNECTED TO THE BMS AND PROVIDE START/STOP/STATUS SIGNAL.

FAN COIL/CONDENSER (FC-1/CU-1)
THE FAN COIL THERMOSTAT SHALL MAINTAIN COMM 132 TEMPERATURE SETPOINT AT ALL TIMES. CONTRACTOR SHALL PROVIDE TEMPERATURE SENSOR AND REPORT AN ALARM IF THE ROOM TEMPERATURE EXCEEDS THE SETPOINT BY MORE 5F.

THE BMS SHALL UTILIZE FAN COIL DRY CONTACTS TO ENABLE ON/OFF CONTROL.

LEGEND

AI	ANALOG INPUT
AO	ANALOG OUTPUT
DI	DIGITAL INPUT
DO	DIGITAL OUTPUT
T-1, T-2, T-3	TEMPERATURE SENSOR
P-1	STATIC PRESSURE SENSOR
DMI	MODULATING ACTUATOR
DSP-1	DIFFERENTIAL STATIC PRESSURE
FMD-1, FMD-2	FLOW MEASURING DEVICE
ST-SP	START-STOP

CONTROL SYSTEM INSTALLATION RESPONSIBILITY

1. THE PREFERRED TEMPERATURE CONTROL SYSTEM SHALL BE ALC.
2. ALL CONTROL COMPONENTS, INCLUDING TEMPERATURE CONTROL VALVES, CABLING, AND TERMINATIONS SHALL BE PROVIDED BY THE TEMPERATURE CONTROLS CONTRACTOR.
3. ALL TRANSFORMERS SHALL BE PROVIDED AND INSTALLED BY THE TEMPERATURE CONTROLS CONTRACTOR.
4. ALL LINE VOLTAGE SHALL BE PROVIDED BY THE ELECTRICAL CONTRACTOR.

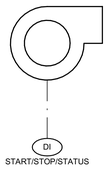

4 M5.01 EXHAUST FAN CONTROL DIAGRAM

SCALE: NONE

C:\Users\o.garcia\Documents\20251 CSUS Child Development MP 19_o.garcia@nexusengineering.net.rvt

Division of the State Architect

APPROVED
DIV. OF THE STATE ARCHITECT
APP: 02-119316 INC:
REVIEWED FOR
SS☐ FLS☐ ACS☑
DATE: 03/24/2022

Office of the State Fire Marshal

OFFICE OF THE STATE FIRE MARSHAL
APPROVED FIRE AND PANIC ONLY
03/14/22
21-0498
Approval of this plan does not authorize or approve any omission or deviation from applicable regulations. Final approval is subject to field inspection. One set of approved plans shall be available on the project site at all times.

CSUS CHILD DEVELOPMENT CENTER

CALIFORNIA STATE UNIVERSITY, STANISLAUS
ONE UNIVERSITY CIRCLE
TURLOCK, CA 95382

ehdd.
PIER 1, BAY 2
THE EMBARCADERO
SAN FRANCISCO, CA 94111
INFO@EHDD.COM
+1 415-285-9193

Consultant

neXus engineering
Consulting Mechanical Engineers
1400 Lone Palm Ave, Suite A
Modesto, CA 95351
Tel: 209.572.7399 Fax: 209.236.1579
www.nexusengineering.net
HVAC, Plumbing/Piping, Fire Sprinklers
Process/Plant Engineering, Refrigeration

Stamp

REGISTERED PROFESSIONAL ENGINEER — STEVEN LAWRENCE — 20998 — MECHANICAL — STATE OF CALIFORNIA

Printing	Date
95% CONSTRUCTION DOCUMENTS	06.25.2021
PERMIT SET	08.16.2021
PERMIT SET - DSA V2	12.15.2021
PERMIT SET - SFM	12.21.2021

Revisions and Description	Date

Scale
12" = 1'-0"

Drawn by
GL

EHDD Job Number
KLA 20-2266

Sheet Title
MECHANICAL - DETAILS

Sheet Number
M5.01 V3

12/8/2021 2:01:32 PM

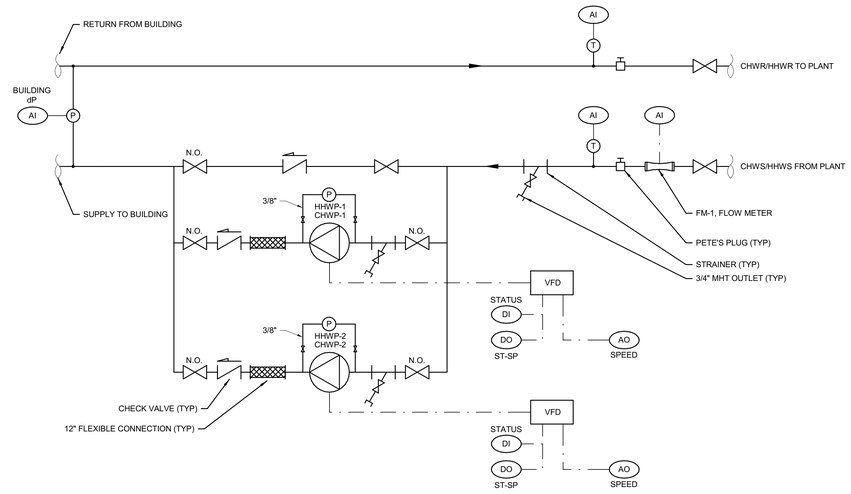

1 M5.02 TYPICAL HYDRONIC PUMP DIAGRAM

SCALE: NONE

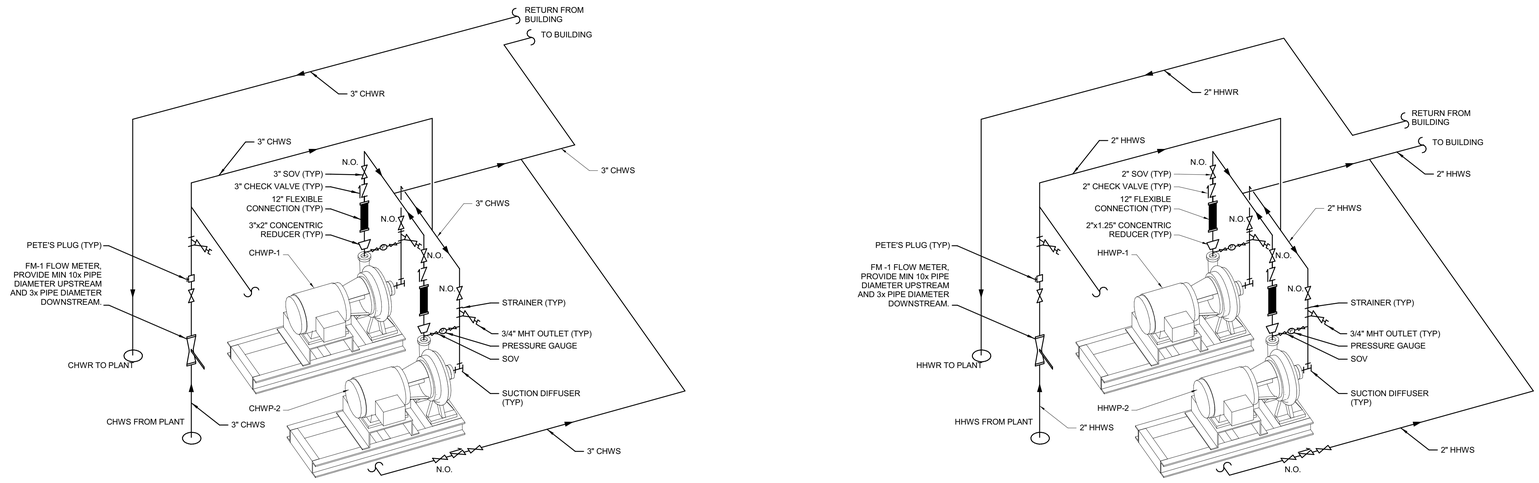

2 M5.02 TYPICAL HYDRONIC PUMP DIAGRAM

SCALE: NONE

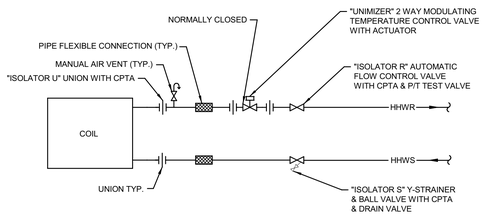

GRISWOLD CONTROLS #CPP-2IRISU

NOTES:

1. PROVIDE PIPE UNIONS AND ARRANGE PIPING TO FACILITATE COIL & CONTROL VALVE REMOVAL
2. PROVIDE MANUAL AIR VENTS AT ALL HIGH POINTS OF SYSTEM.
3. PROVIDE REDUCERS AS REQUIRED

3 M5.02 COIL PIPING DETAIL, 2-WAY VALVE

SCALE: NONE

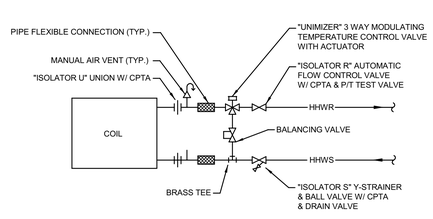

GRISWOLD CONTROLS #CPP-3IRISU

NOTES:

1. PROVIDE PIPE UNIONS AND ARRANGE PIPING TO FACILITATE COIL & CONTROL VALVE REMOVAL
2. PROVIDE MANUAL AIR VENTS AT ALL HIGH POINTS OF SYSTEM. (CPTA=COMBINATION PRESSURE/TEMPERATURE TEST VALVE & MANUAL AIR VENT)
3. PROVIDE REDUCERS AS REQUIRED

4 M5.02 COIL PIPING DETAIL, 3-WAY VALVE

SCALE: NONE

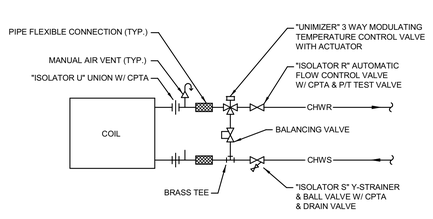

GRISWOLD CONTROLS #CPP-3IRISU

NOTES:

1. PROVIDE PIPE UNIONS AND ARRANGE PIPING TO FACILITATE COIL & CONTROL VALVE REMOVAL
2. PROVIDE MANUAL AIR VENTS AT ALL HIGH POINTS OF SYSTEM. (CPTA=COMBINATION PRESSURE/TEMPERATURE TEST VALVE & MANUAL AIR VENT)
3. PROVIDE REDUCERS AS REQUIRED

5 M5.02 AHU COIL PIPING DETAIL, 3-WAY VALVE

SCALE: NONE

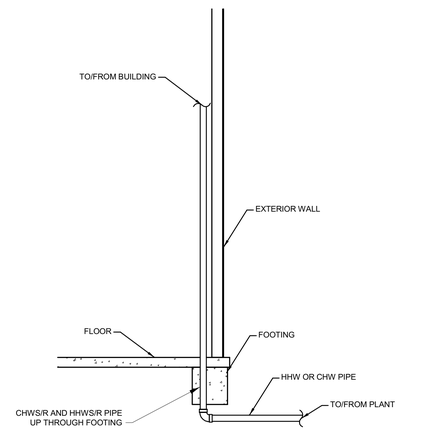

6 M5.02 CHW/HHW PENETRATION DETAIL

SCALE: NONE

Division of the State Arch.

APPROVED
DIV. OF THE STATE ARCHITECT
APP: 02-119316 INC:
REVIEWED FOR
SS☐ FLS☐ ACS☑
DATE: 03/24/2022

Office of the State Fire Marshal

OFFICE OF THE STATE FIRE MARSHAL
APPROVED FIRE AND PANIC ONLY
03/14/22
21-0498
Approval of this plan does not authorize or approve any omission or deviation from applicable regulations. Final approval is subject to field inspection. One set of approved plans shall be available on the project site at all times.

CSUS CHILD DEVELOPMENT CENTER

CALIFORNIA STATE
UNIVERSITY, STANISLAUS
ONE UNIVERSITY CIRCLE
TURLOCK, CA 95382

ehdd.

PIER 1, BAY 2
THE EMBARCADERO
SAN FRANCISCO, CA 94111

INFO@EHDD.COM
+1 415-285-9193

Consultant

neXus engineering
Consulting Mechanical Engineers
1400 Lone Palm Ave, Suite A
Modesto, CA 95351
Tel: 209.572.7399 Fax: 209.236.1579
www.nexusengineering.net
HVAC , Plumbing/Piping , Fire Sprinklers
Process/Plant Engineering , Refrigeration

Stamp

Printing	Date
95% CONSTRUCTION DOCUMENTS	06.25.2021
PERMIT SET	08.16.2021
PERMIT SET - DSA V2	12.15.2021
PERMIT SET - SFM	12.21.2021

Revisions and Description	Date

Scale
12" = 1'-0"

Drawn by
GL

EHDD Job Number
KLA 20-2266

Sheet Title
MECHANICAL - DETAILS

Sheet Number
M5.02 V3

C:\Users\o.garcia\Documents\20251 CSUS Child Development MP 19_o.garcia@nexusengineering.net.rvt

12/8/2021 2:01:32 PM

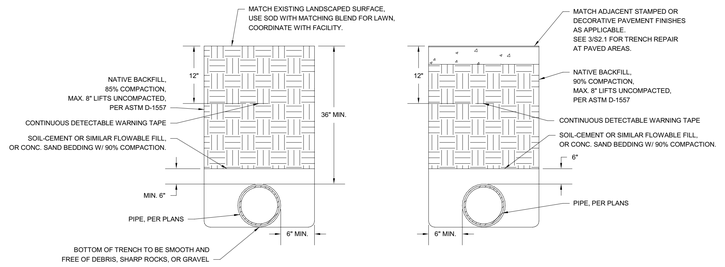

NOTE: MULTIPLE PIPES SHALL HAVE MIN. 12" SEPARATION HORIZONTALLY.
EXCAVATION SHALL NOT DISTURB SOIL IN A 45° PROFILE FROM ANY STRUCTURAL FOOTING.

1 M5.03 PIPE TRECH DETAIL

SCALE: NONE

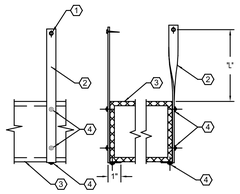

1. UPPER ATTACHMENT - SEE HVAC DUCT CONSTRUCTION STANDARDS - METAL AND FLEXIBLE, THIRD EDITION, SMACNA - 2006, FIGURES 5-2, 5-3 AND 5-4. PROVIDE FRAMING, BLOCKING OR STRUCTURAL MEMBER AS MAY BE REQUIRE, COORDINATE STRUCTURAL COMPONENTS WITH STRUCTURAL PLANS OR STRUCTURAL ENGINEER OF RECORD.
2. DUCT SUPPORT STRAP, WIRE OR ROD SEE TABLE BELOW FOR DETAILS.
3. GALV. SHEET METAL DUCT W/ ACOUSTIC LINING, SEE MECHANICAL PLANS FOR SIZES.
4. #10 x 3/4" SELF-TAPPING CADMIUM PLATED SHEET METAL SCREWS TO ANCHOR STRAPS TO DUCT. ALL STRAPS TO BE TIGHT AGAINST DUCT AND SUPPORT MEMBERS.

NOTES:
1. DUCTWORK SHALL CONFORM WITH, HVAC DUCT CONSTRUCTION STANDARDS - METAL AND FLEXIBLE, THIRD EDITION, SMACNA - 2006.
2. HANGER SHALL BE POSITIVELY ATTACHED TO THE DUCT WITHIN 2" OF THE TOP OF THE DUCT WITH A MINIMUM OF TWO #10 SHEET METAL SCREWS EACH SIDE AND #10 SHEET METAL SCREW ON THE BOTTOM OF DUCT WITHIN 1" OF EACH SIDE.
3. DUCT WITH A CROSS-SECTIONAL AREA EQUAL TO OR GREATER THAN 6 SQUARE FEET, AND "L" GREATER THAN 12" REQUIRE SEISMIC BRACING.
4. OSHPD ONLY - SUPPLY & RETURN AIR DUCTS SERVING A HOSPITAL OR OTHER MEDICAL BUILDING SHALL NOT HAVE ACOUSTICALLY LINING OR INTERNALLY LINED INSULATION.

TABLE 5-1 RECTANGLE DUCT HANGERS MINIMUM SIZE

MAXIMUM HALF OF DUCT PERIMETER	PAIR @ 10'-0" SPACING		PAIR @ 8'-0" SPACING		PAIR @ 5'-0" SPACING		PAIR @ 4'-0" SPACING	
	STRAP	WIRE/ROD	STRAP	WIRE/ROD	STRAP	WIRE/ROD	STRAP	WIRE/ROD
P/2 = 30"	1" x 22 GA	10 GA (0.135")	1" x 22 GA	10 GA (0.135")	1" x 22 GA	12 GA (0.106")	1" x 22 GA	12 GA (0.106")
P/2 = 72"	1" x 18 GA	3/8"	1" x 20 GA	1/4"	1" x 22 GA	1/4"	1" x 22 GA	1/4"
P/2 = 96"	1" x 16 GA	3/8"	1" x 18 GA	3/8"	1" x 20 GA	3/8"	1" x 22 GA	1/4"
P/2 = 120"	1-1/2" x 16 GA	1/2"	1" x 16 GA	3/8"	1" x 18 GA	3/8"	1" x 20 GA	1/4"
P/2 = 168"	1-1/2" x 16 GA	1/2"	1-1/2" x 16 GA	1/2"	1" x 16 GA	3/8"	1" x 18 GA	3/8"
P/2 = 192"	-	1/2"	1-1/2" x 16 GA	1/2"	1" x 16 GA	3/8"	1" x 16 GA	3/8"
P/2 ≥ 193"	SPECIAL ANALYSIS REQUIRED							

WHEN STRAPS ARE LAP-JOINED, USE THESE MINIMUM FASTENERS:	WHEN STRAPS ARE LAP-JOINED, USE THESE MINIMUM FASTENERS:	
	STRAP	WIRE OR ROD (DIA.)
1"x 18, 20, 22 GA - TWO NO. 10 OR ONE 1/4" BOLT 1" x 16 GA - TWO 1/4" BOLT 1-1/2" x 16 GA" - TWO 3/8" BOLT PLACE FASTENERS IN SERIES, NOT SIDE-BY-SIDE.	1" x 22 GA - 260 LBS 1" x 20 GA - 320 LBS 1" x 18 GA - 420 LBS 1" x 16 GA - 700 LBS 1-1/2" x 16 GA - 1100 LBS	0.106" - 80 LBS 0.135" - 120 LBS 0.162" - 160 LBS 1/4" - 270 LBS 3/8" - 680 LBS 1/2" - 1250 LBS 5/8" - 2000 LBS 3/4" - 3000 LBS

NOTES:
1. DIMENSIONS OTHER THAN GAGE ARE IN INCHES.
2. TABLES ALLOW FOR DUCT WEIGHT 1 LB./SF INSULATION WEIGHT NORMAL REINFORCEMENT AND TRAPEZE WEIGHT BUT NO EXTERNAL LOADS.
3. STRAPS ARE GALVANIZED STEEL; OTHER MATERIALS ARE UNCOATED STEEL.
4. ALLOWABLE LOADS FOR P/2 ASSUME THAT DUCTS ARE 16 GA MAXIMUM, EXCEPT THAT WHEN MAXIMUM DUCT DIMENSION (W) IS OVER 60", THEN P/2 MAXIMUM IS 1.25W.
5. FOR TRAPEZE SIZES SEE, HVAC DUCT CONSTRUCTION STANDARDS - METAL AND FLEXIBLE, THIRD EDITION, SMACNA - 2006, TABLE 5-3 ALLOWABLE LOADS IN POUNDS FOR TRAPEZE BARS AND FIGURE 5-6 TRAPEZE LOAD DIAGRAM.
6. 12 GA, 10 GA OR 8 GA WIRE IS STEEL OF BLACK-ANNEALED, BRIGHT BASIC OR GALVANIZED TYPE.
7. CABLE HANGING SYSTEMS WITH ADJUSTABLE MECHANICAL DEVICE.

2 M5.03 RECTANGULAR DUCT HANGER DETAIL

SCALE: NONE

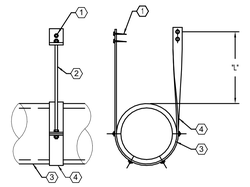

1. UPPER ATTACHMENT - SEE HVAC DUCT CONSTRUCTION STANDARDS - METAL AND FLEXIBLE, THIRD EDITION, SMACNA - 2006, FIGURES 5-2, 5-3 AND 5-4. PROVIDE FRAMING, BLOCKING OR STRUCTURAL MEMBER AS MAY BE REQUIRE,COORDINATE STRUCTURAL COMPONENTS WITH STRUCTURAL PLANS OR STRUCTURAL ENGINEER OF RECORD.
2. HANGER ROD SEE TABLE, FOR SIZE SEE TABLE.
3. GALV. SHEET METAL DUCT W/ ACOUSTIC LINING, SHEET METAL DUCT W/ EXTERNAL INSULATION OR VENT, SEE PLANS FOR SIZE.
4. STRAP, SEE TABLE FOR SIZE.

NOTES:
1. DUCTWORK SHALL CONFORM WITH, HVAC DUCT CONSTRUCTION STANDARDS - METAL AND FLEXIBLE, THIRD EDITION, SMACNA - 2006.
2. DUCT WITH A CROSS-SECTIONAL AREA EQUAL TO OR GREATER THAN 6 SQUARE FEET, AND "L" GREATER THAN 12" REQUIRE SEISMIC BRACING.
3. OSHPD ONLY - SUPPLY & RETURN AIR DUCTS SERVING A HOSPITAL OR OTHER MEDICAL BUILDING SHALL NOT HAVE ACOUSTICALLY LINING OR INTERNALLY LINED INSULATION.

TABLE 5-2 MINIMUM HANGER SIZES FOR ROUND DUCT

DUCT DIAMETER	MAXIMUM SPACING	ROD DIAMETER	STRAP
≤ 10"	12'	1/4"	1" x 22 GA
11" TO 18"	12'	1/4"	1" x 22 GA
19" TO 24"	12'	1/4"	1" x 22 GA
25" TOI 36"	12'	3/8"	1" x 20 GA
37" TO 50"	12'	2 @ 3/8"	2 @ 1" x 20 GA
51" TO 60"	12'	2 @ 3/8"	2 @ 1" x 18 GA
61" TO 84"	12'	2 @ 3/8"	2 @ 1" x 16 GA
85" TO 96"	12'	2 @ 1/2"	2 @ 1-1/2" x 16 GA

NOTES:
1. STRAPS ARE GALVANIZED STEEL; RODS ARE UNCOATED OR GALVANIZED STEEL; WIRE IS BLACK ANNEALED, BRIGHT BASIC OR GALVANIZED STEEL. ALL ARE ALTERNATIVES.
2. TABLE ALLOWS FOR CONVENTIONAL WALL THICKNESS, AND JOINT SYSTEMS PLUS 1 LB./SF INSULATION WEIGHT. IF HEAVIER DUCTS ARE TO BE INSTALLED, ADJUST HANGER SIZES TO BE WITHIN THEIR LOAD LIMITS; SEE ALLOWABLE LOAD LIMITS WITH TABLE 5-1. HANGER SPACING MAY BE ADJUSTED BY SPECIAL ANALYSIS.
3. FOR INDUSTRIAL GRADE SUPPORTS, INCLUDING SADDLES, SINGLE POINT TRAPEZE LOADS, LONGER SPANS AND FLANGED JOINT LOADS, SEE SMACNA'S ROUND INDUSTRIAL DUCT CONSTRUCTION STANDARDS.

3 M5.03 ROUND DUCT HANGER DETAIL

SCALE: NONE

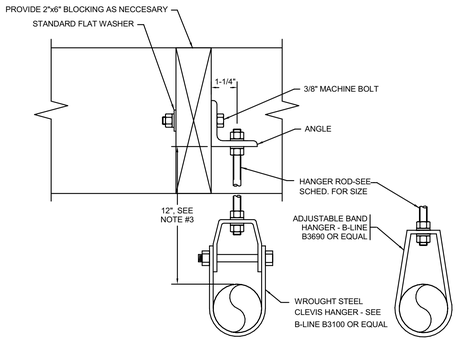

COPPER TUBE & PIPE HANGER SCHEDULE
HORIZONTAL SUPPORT
SOLDER OR BRAZED JOINTS

PIPE SIZE	HANGER ROD	MAX HORIZONTAL SPAN
1/2" - 1-1/2"	3/8"	6'
2" - 4"	3/8"	10'
6"	1/2"	10'

COPPER TUBE AND PIPE WITH SOLDER, BRAZED OR WELDED JOINTS, SIZES DEVELOPED FROM TABLE 313.3 & TABLE 313.6 OF THE 2019 CPC. ALL PIPE SHALL BE SUPPORTED WITHIN 18" OF A JOINT.

SEISMIC BRACING NOTES

ALL PIPE SHALL BE SEISMICALLY BRACED PER 2016 ASCE 7 MINIMUM DESIGN LOADS FOR BUILDINGS AND OTHER STRUCTURES, SECTION 13.6.8 AND 2019 TITLE 24, CALIFORNIA BUILDING CODE, PART 2, SECTION 1617A. THE CONTRACTOR MAY USE MASON WEST, INC. SEISMIC RESTRAINT GUIDELINE FOR SUSPENDED DISTRIBUTION SYSTEMS, THIRD EDITION, 2016 OR EQUAL. THE FOLLOWING EXCEPTIONS APPLY ACCORDING TO 2019 CBC 1617A.1.26.

1. INDEPENDENTLY SUPPORTED PIPE 3" DIA OR SMALLER WHERE PROVISIONS ARE MADE TO PREVENT OR PROTECT AGAINST IMPACT WITH OTHER BUILDING COMPONENTS.
2. TRAPEZE HUNG PIPES WHERE ALL PIPES MEET EXCEPTION #1 ABOVE AND TOTAL WEIGHT DOES NOT EXCEED 10 LB/FT.
3. INDEPENDENT OR TRAPEZE HUNG PIPE RUNS WHERE TOP OF PIPE DOES NOT EXCEED 12" BELOW THE STRUCTURAL ATTACHMENT POINT FOR THE ENTIRE RUN. WHERE ROD HANGERS ARE USED, THEY SHALL BE EQUIPPED WITH SWIVELS, EYE NUTS, OR OTHER DEVICES TO PREVENT BENDING IN THE ROD.

4 M5.03 PIPE HANGER DETAIL

SCALE: NONE

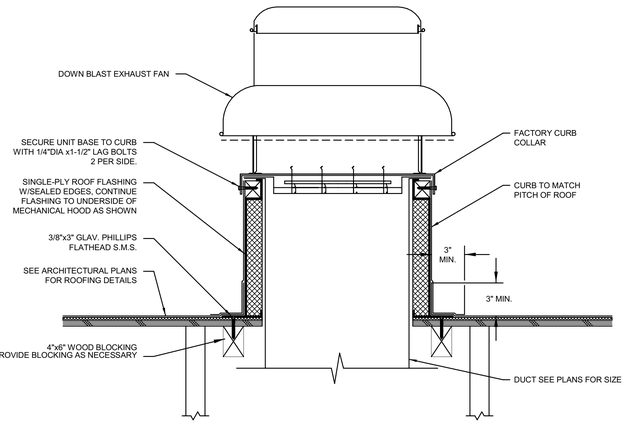

5 M5.03 UPBLAST ROOF EXHAUST DETAIL

SCALE: NONE

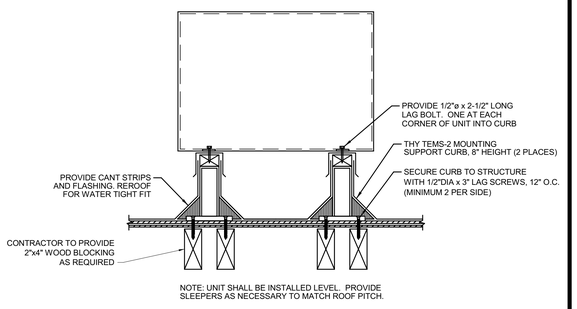

NOTE: UNIT SHALL BE INSTALLED LEVEL. PROVIDE SLEEPERS AS NECESSARY TO MATCH ROOF PITCH.

6 M5.03 CONDENSING UNIT MOUNTING DETAIL

SCALE: NONE

C:\Users\o.garcia\Documents\20251 CSUS Child Development MP 19_o.garcia@nexusengineering.net.rvt

Division of the State Architect
APPROVED
DIV. OF THE STATE ARCHITECT
APP: 02-119316 INC:
REVIEWED FOR
SS☐ FLS☐ ACS☑
DATE: 03/24/2022

Office of the State Fire Marshal
OFFICE OF THE STATE FIRE MARSHAL
APPROVED FIRE AND PANIC ONLY
03/14/22
21-0498
Approval of this plan does not authorize or approve any omission or deviation from applicable requirements. Final approval is subject to field inspection. One set of approved plans shall be available on the project site at all times.

CSUS CHILD DEVELOPMENT CENTER

CALIFORNIA STATE UNIVERSITY, STANISLAUS
ONE UNIVERSITY CIRCLE
TURLOCK, CA 95382

ehdd.

PIER 1, BAY 2
THE EMBARCADERO
SAN FRANCISCO, CA 94111

INFO@EHDD.COM
+1 415-285-9193

Consultant
neXus engineering
Consulting Mechanical Engineers
1400 Lone Palm Ave, Suite A
Modesto, CA 95351
Tel: 209.572.7399 Fax: 209.236.1579
www.nexusengineering.net
HVAC , Plumbing/Piping , Fire Sprinklers
Process/Plant Engineering , Refrigeration

Stamp

Printing	Date
95% CONSTRUCTION DOCUMENTS	06.25.2021
PERMIT SET	08.16.2021
PERMIT SET - DSA V2	12.15.2021
PERMIT SET - SFM	12.21.2021

Revisions and Description	Date

Scale
12" = 1'-0"

Drawn by
Author

EHDD Job Number
KLA 20-2266

Sheet Title
MECHANICAL - DETAILS

Sheet Number
M5.03 V3

12/8/2021 2:01:33 PM

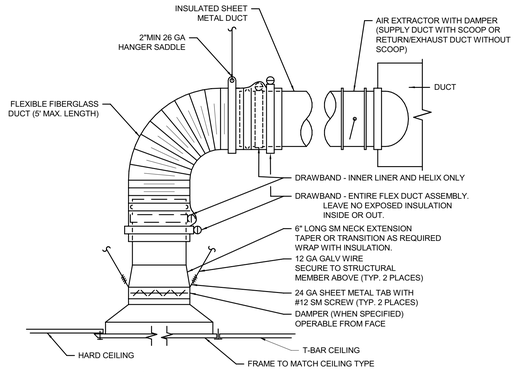

FLEXIBLE DUCT NOTES:
1. FLEXIBLE DUCTS SHALL CONSIST OF AN EXTERIOR REINFORCED LAMINATED VAPOR BARRIER. FIBER GLASS INSULATION (PER CEC STANDARDS), ENCAPSULATED SPRING STEEL WIRE HELIX AND IMPERVIOUS, SMOOTH, NON-PERFORATED INTERIOR VINYL LINER. INDIVIDUAL LENGTH OF FLEXIBLE DUCT SHALL CONTAIN FACTORY FABRICATED STEEL CONNECTION COLLARS.
2. FLEXIBLE DUCTS SHALL BE SUPPORTED AT OR NEAR MID-LENGTH WITH 2" WIDE 28 GA. STEEL HANGER COLLAR ATTACHED TO THE STRUCTURE WITH AN APPROVED DUCT HANGER. INSTALLATION SHALL MINIMIZE SHARP RADIUS TURNS OR OFFSETS. THE MAXIMUM LENGTH WILL BE FIVE (5) FEET AND CAN BE USED AT THE TERMINAL ENDS ONLY, AND SHALL NOT BE USED IN LIEU OF RIGID ELBOWS OR FITTINGS. EXCEPT THAT FLEXIBLE DUCTS PROPERLY INSTALLED MAY BE USED TO CROSS SEISMIC JOINTS WITHOUT OFFSETS.

1 M5.04 TYPICAL REGISTER DETAIL
SCALE: NONE

1. SHEET METAL DUCT.
2. SHEET METAL TAPER WITH BRANCH STUB.
3. DAMPER AT END OF RUN ONLY.
4. BRANCH TAKE-OFF.
5. BUTTERFLY DAMPER W/LOCKING QUAD. (TYP.)

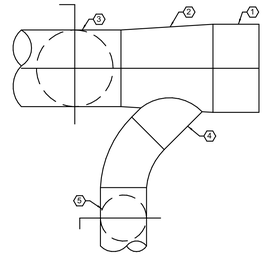

ROUND

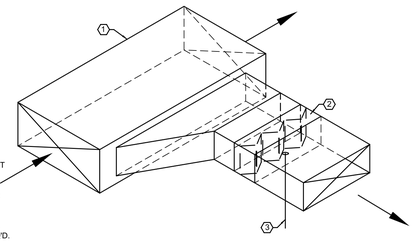

1. RECTANGULAR GALVANIZED SHEET METAL SUPPLY AIR DUCT - SEE MECHANICAL PLAN FOR SIZE.
2. OPPOSED BLADE DAMPER AS PER SPECIFICATIONS.
3. PROVIDE REMOTE OPERATED DAMPER ACTUATOR. YOUNG REG. #830A-CC WITH CABLE KIT, AS REQ'D.

RECTANGULAR

2 M5.04 BRANCH DUCT TAKE-OFF & DAMPER DETAIL
SCALE: NONE

Division of the State Architect

APPROVED
DIV. OF THE STATE ARCHITECT
APP: 02-119316 INC:
REVIEWED FOR
SS☐ FLS☐ ACS☑
DATE: 03/24/2022

Office of the State Fire Marshal

OFFICE OF THE STATE FIRE MARSHAL
APPROVED FIRE AND PANIC ONLY
03/14/22
21-0498
Approval of this plan does not authorize or approve any omission or deviation from applicable requirements. Final approval is subject to field inspection. One set of approved plans shall be available on the project site at all times.

CSUS CHILD DEVELOPMENT CENTER

CALIFORNIA STATE UNIVERSITY, STANISLAUS
ONE UNIVERSITY CIRCLE
TURLOCK, CA 95382

ehdd.

PIER 1, BAY 2
THE EMBARCADERO
SAN FRANCISCO, CA 94111

INFO@EHDD.COM
+1 415-285-9193

Consultant

neXus engineering
Consulting Mechanical Engineers
1400 Lone Palm Ave, Suite A
Modesto, CA 95351
Tel: 209.572.7399 Fax: 209.236.1579
www.nexusengineering.net
HVAC , Plumbing/Piping , Fire Sprinklers
Process/Plant Engineering , Refrigeration

Stamp

Printing	Date
95% CONSTRUCTION DOCUMENTS	06.25.2021
PERMIT SET	08.16.2021
PERMIT SET - DSA V2	12.15.2021
PERMIT SET - SFM	12.21.2021

Revisions and Description	Date

Scale
12" = 1'-0"

Drawn by
Author

EHDD Job Number
KLA 20-2266

Sheet Title
MECHANICAL - DETAILS

Sheet Number
M5.04 V3

C:\Users\o.garcia\Documents\20251 CSUS Child Development MP 19_o.garcia@nexusengineering.net.rvt

12/8/2021 2:01:44 PM

C:\Users\o.garcia\Documents\20251 CSUS Child Development MP 19_o.garcia@nexusengineering.net.rvt

BUILDING ENERGY ANALYSIS REPORT

PROJECT:

CSU Stanislaus CDC
One University Circle
Turlock, CA 94111

Project Designer:

ehdd
Pier 1, Bay 2 The Embarcadero
San Francisco, CA 94111
+1 415-285-9193

Report Prepared by:

Gary Leusink
Nexus Engineering Inc.
1400 Lone Palm Ave, Suite A
Modesto, CA 95351
209-572-7399

Job Number:

20251

Date:

8/13/2021

The EnergyPro computer program has been used to perform the calculations summarized in this compliance report. This program has approval and is authorized by the California Energy Commission for use with both the Residential and Nonresidential 2019 Building Energy Efficiency Standards.

This program developed by EnergySoft Software – www.energysoft.com.

TABLE OF CONTENTS

Cover Page	1
Table of Contents	2
Form NRCC-MCH-E Mechanical Systems	3
Form NRCC-PLB-E Domestic Water Heating System	17
HVAC System Heating and Cooling Loads Summary	23

CERTIFICATE OF COMPLIANCE — **Page 1 of 14**
Project Name: CSU Stanislaus CDC | **Report Page:**
Project Address: One University Circle | **Date Prepared:** 8/13/2021

A. GENERAL INFORMATION

01	Project Location (city)	Turlock	04	Total Conditioned Floor Area	12621.2
02	Climate Zone	12	05	Total Unconditioned Floor Area	566
03	Occupancy Types Within Project:		06	Number of Habitable Floors (Grade)	5
☒	Office (B)	☐ Retail (M)	☐	Non-refrigerated Warehouse (S)	
☐	Hotel/Motel Guest Rooms (R-1)	☐ School (E)	☐	Healthcare Facility (I)	
☐	High-Rise Residential (R-2/R-3)	☐ Relocatable Class Bldg (E)	☒	Other (write in)	See Table J

B. PROJECT SCOPE

This table includes mechanical systems or components that are within the scope of the permit application and are demonstrating compliance using the prescriptive path outlined in §141.0, or §141.1(b)2. for alterations.

		01	02	03
		Air System(s)	Wet System Components	Dry System Components
☐	Heating Air System		☐ Water Economizer	☒ Air Economizer
☐	Cooling Air System		☐ Pumps	☐ Electric Resistance Heat
	Mechanical Controls		☐ System Piping	☒ Fan Systems
☒	Mechanical Controls (existing to remain, altered or new)		☐ Cooling Towers	☒ Ductwork (existing to remain, altered or new)
			☐ Chillers	☒ Ventilation
			☐ Boilers	☒ Zonal Systems/ Terminal Boxes

CERTIFICATE OF COMPLIANCE — **Page 2 of 14**
Project Name: CSU Stanislaus CDC | **Report Page:**
Project Address: One University Circle | **Date Prepared:** 8/13/2021

C. COMPLIANCE RESULTS

Table C will indicate if the project data input into the compliance document is compliant with mechanical requirements. This table is not editable by the user. If this table says "DOES NOT COMPLY" or "COMPLIES with Exceptional Conditions" refer to Table E, or the table indicates as not compliant for guidance:

01		02		03		04		05		06		07		08	09
System Summary §110.1, §110.2, §140.4	AND	Pumps §140.4(k)	AND	Fans/ Economizers §140.4(c) §140.4(e)	AND	System Controls §110.2, §120.2, §140.4(f)	AND	Ventilation §120.1	AND	Terminal Box Controls §140.4(d)	AND	Distribution §120.2, §140.4(i)	AND	Cooling Towers §110.2(d)2	Compliance Results
[See Table F]	AND	[See Table G]	AND	[See Table H]	AND	[See Table I]	AND	[See Table J]	AND	Yes	AND	[See Table K]	AND	[See Table L]	[See Table M]
Mandatory Measures Compliance [See Table Q for Details]															COMPLIES

D. EXCEPTIONAL CONDITIONS

This table is auto-filled with unediatable comments because of selections made or data entered in tables throughout the form.

E. ADDITIONAL REMARKS

This table includes remarks made by the permit applicant to the Authority Having Jurisdiction.

F. HVAC SYSTEM SUMMARY (DRY & WET SYSTEMS)

This section does not apply to this project.

G. PUMPS

This section does not apply to this project.

CERTIFICATE OF COMPLIANCE — **Page 3 of 14**
Project Name: CSU Stanislaus CDC | **Report Page:**
Project Address: One University Circle | **Date Prepared:** 8/13/2021

H. FAN SYSTEMS & AIR ECONOMIZERS

This table is used to demonstrate compliance with prescriptive requirements found in §140.4(c), §140.4(d) and §140.4(m) for fan systems. Fan systems serving only process loads are exempt from these requirements and do not need to be included in Table H.

01	02	03	04	05	06	07	08
System Name:	Undefined System	Economizer:[1]	Differential Temperature	Economizer Controls:	Designed per §140.4(c) and (m):	System Fan Type:	Variable Air Volume
Fan Name or Item Tag	Fan Function	Qty	Maximum Design Supply Airflow (CFM)	HP Unit[2]	Design HP	Fan Power Pressure Drop Adjustment - Table 140.4-B Device	Design Airflow through Device (CFM)
SF	Supply	1	12000	BHP	1.04		
RF	Return	1	0	BHP	4.42		
EF	Exhaust	1	0	BHP	0.12		
EF	Exhaust	1	0	BHP	0.03		
EF	Exhaust	1	0	BHP	0.06		
EF	Exhaust	1	0	BHP	0.03		
EF	Exhaust	1	0	BHP	0.18		
EF	Exhaust	1	0	BHP	0.06		
EF	Exhaust	1	0	BHP	0.5		
EF	Exhaust	1	0	BHP	0.12		
EF	Exhaust	1	0	BHP	0.01		
Total System Design Supply Airflow (CFM):			12000	Total System Design (BHP):	6.58	Maximum System Fan Power (BHP):	15.6

[1] *FOOTNOTES: Computer room economizers must meet requirements of §140.9(b)1 and will be documented on the NRCC-PRC-E document.*

[2] *The unit used for HP must be consistent for all fans within a system.*

CERTIFICATE OF COMPLIANCE — **Page 4 of 14**
Project Name: CSU Stanislaus CDC | **Report Page:**
Project Address: One University Circle | **Date Prepared:** 8/13/2021

I. SYSTEM CONTROLS

This table is used to demonstrate compliance with mandatory controls in §110.2, and §120.2, and prescriptive controls in §140.4(f) and (n) or requirements in §141.0(b)2E for altered space conditioning systems.

01	02	03	04	05	06	07	08	09
System Name	System Zoning	Conditioned Floor Area Range Served (ft²)	Thermostats §110.2(b), & (c)[1], §120.2(a)6c §143.1(b)2E	Shut-Off Controls §120.2(e)	Isolation Zone Controls §120.2(e)	Demand Response §110.12a and §120.2(h)	Supply Air Temp. Reset §140.4(f)	Window Interlocks per §140.4(n)
Undefined System	Multi-zone w/ DDC to zone	<= 25,000 ft²	Setback	Auto Timer Switch	4 Hour Timer	EMCS	Included	Provided

[1] *FOOTNOTES: Gravity gas wall heaters, gravity floor heaters, gravity room heaters, non-central electric heaters, fireplaces or decorative gas appliances, wood stoves are not required to have setback thermostats.*

*Notes: Controls with a * require a note in the space below explaining how compliance is achieved. EX: system 1 - SA Temp Reset: Exempt because zones compliant with §140.4(d) - EXCEPTION 1 to §140.4(f)*

J. VENTILATION AND INDOOR AIR QUALITY

This table is used to demonstrate compliance with mandatory ventilation requirements in §120.1 and §120.2(d)8 for all nonresidential, high-rise residential and hotel/motel occupancies. For alterations, only ventilation systems being altered within the scope of the permit application need to be documented in this table. In lieu of this table, the required outdoor ventilation rates and airflows may be shown on the plans or the calculations can be presented in a spreadsheet.

01	☐	Check the box if the project is showing ventilation calculations on the plans, or attaching the calculations instead of completing this table.
02	☒	Check this box if the project included Nonresidential or Hotel/Motel spaces
03	☐	Check this box if the project included new or altered high-rise residential dwelling units.
04	☐	Check this box if the project is using natural ventilation in any nonresidential or hotel/motel spaces to meet required ventilation rates per §120.1(c)2.

Nonresidential and Hotel/Motel Ventilation Systems		04		05		06	07
System Name	Undefined System	System Design OA CFM: Airflow[2]	4199	System Design Transfer Air CFM:	0	Air Filtration per §120.1(c) and §141.0(b)2.[3] Provided per §120.1(c) (NR and Hotel/Motel))	
08	09	10	11	12	13	14	15	16

CERTIFICATE OF COMPLIANCE — **Page 5 of 14**
Project Name: CSU Stanislaus CDC | **Report Page:**
Project Address: One University Circle | **Date Prepared:** 8/13/2021

J. VENTILATION AND INDOOR AIR QUALITY

	Mechanical Ventilation Required per §120.1(c)3.[4]							EVA. Vent per §120.1(c)4		DCV or Sensor Controls per §120.1(d)3, §120.1(d)5, and §120.1(c)3.[4] [5]
Space Name or Item Tag	Occupancy Type[4]	Conditioned Floor Area (ft²)	# of Shower Heads/ toilets	# of people[5]	Required Min OA CFM	Required Min CFM	Provided per Design CFM			
VAV-100 Toddles 108,111,111A	Lecture/ postsecondary classroom	865			328.7	0	0			DCV / Occ Sensor — Provided per §120.1(d)4 / NA: Not required per §120.1(d)3
VAV-101 Observ 110	Office space	249			37.4	0	0			DCV / Occ Sensor — Provided per §120.1(d)4 / NA: Not required per §120.1(d)3
VAV-102 Toddler 107,107A,109	Lecture/ postsecondary classroom	904			343.5	0	210			DCV / Occ Sensor — Provided per §120.1(d)4 / NA: Not required per §120.1(d)3
VAV-103 Office 101, 102	Office space	265			39.8	0	0			DCV / Occ Sensor — Provided per §120.1(d)4 / NA: Not required per §120.1(d)3
VAV-104, Nap 107B	Daycare (through- age 4)	226			47.5	0	0			DCV / Occ Sensor — Provided per §120.1(d)4 / NA: Not required per §120.1(d)3
VAV-105 Office 104,103,106	Office space	332			49.8	0	0			DCV / Occ Sensor — Provided per §120.1(d)4 / NA: Not required per §120.1(d)3

CERTIFICATE OF COMPLIANCE — **Page 6 of 14**
Project Name: CSU Stanislaus CDC | **Report Page:**
Project Address: One University Circle | **Date Prepared:** 8/13/2021

J. VENTILATION AND INDOOR AIR QUALITY

VAV-106 Hall 113,140, Lobby 103	Corridor	2133			320	0	0		DCV / Occ Sensor	NA: Not required per §120.1(d)3 / NA: Not required space type
VAV-107 NAP 119B	Daycare (through- age 4)	280			58.8	0	0		DCV / Occ Sensor	Provided per §120.1(d)4 / NA: Not required space type
VAV-108 INFANT 139D, 139D	Lecture/ postsecondary classroom	193			73.3	0	0		DCV / Occ Sensor	Provided per §120.1(d)4 / NA: Not required space type
VAV-109 Recpt 100	All others	217			32.6	0	0		DCV / Occ Sensor	Provided per §120.1(d)4 / NA: Not required space type
VAV-110 INFANT 139, 139A,139C	Lecture/ postsecondary classroom	744			282.7	0	80		DCV / Occ Sensor	Provided per §120.1(d)4 / NA: Not required space type
VAV-111 OFFICE 137, 138	Office space	320			48	0	140		DCV / Occ Sensor	NA: Not required per §120.1(d)3 / NA: Not required space type
VAV-112 Work Area 135,135A,135C	Lecture/ postsecondary classroom	636			241.7	0	80		DCV / Occ Sensor	Provided per §120.1(d)4 / NA: Not required space type

Division of the State Architect

APPROVED
DIV. OF THE STATE ARCHITECT
APP: 02-119316 INC:
REVIEWED FOR
SS ☐ FLS ☐ ACS ☑
DATE: 03/24/2022

Office of the State Fire Marshal

OFFICE OF THE STATE FIRE MARSHAL
APPROVED FIRE AND PANIC ONLY
03/14/22
21-0498
Approval of this plan does not authorize or approve any omission or deviation from applicable requirements. Final approval is subject to field inspection. One set of approved plans shall be available on the project site at all times.

CSUS CHILD DEVELOPMENT CENTER

CALIFORNIA STATE
UNIVERSITY, STANISLAUS
ONE UNIVERSITY CIRCLE
TURLOCK, CA 95382

ehdd

PIER 1, BAY 2
THE EMBARCADERO
SAN FRANCISCO, CA 94111

INFO@EHDD.COM
+1 415-285-9193

Consultant

neXus engineering
Consulting Mechanical Engineers
1400 Lone Palm Ave, Suite A
Modesto, CA 95351
Tel: 209.572.7399 Fax: 209.236.1579
www.nexusengineering.net
HVAC , Plumbing/Piping , Fire Sprinklers
Process/Plant Engineering , Refrigeration

Stamp

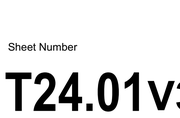

Printing	Date
95% CONSTRUCTION DOCUMENTS	06.25.2021
PERMIT SET	08.16.2021
PERMIT SET - DSA V2	12.15.2021
PERMIT SET - SFM	12.21.2021

Revisions and Description — Date

Scale
12" = 1'-0"

Drawn by
GL

EHDD Job Number
KLA 20-2266

Sheet Title
ENERGY COMPLIANCE

Sheet Number
T24.01v3

STATE OF CALIFORNIA
Mechanical Systems
NRCC-MCH-E
CALIFORNIA ENERGY COMMISSION

CERTIFICATE OF COMPLIANCE			**NRCC-MCH-E**
Project Name:	CSU Stanislaus CDC	**Report Page:**	**(Page 11 of 14)**
Project Address:	One University Circle	**Date Prepared:**	8/13/2021

L. DISTRIBUTION (DUCTWORK and PIPING)

		☐	In a space directly under a roof that has a U-factor greater than the u-factor of the ceiling, or if the roof does not meet the requirements of §140.3(a)1B or if the roof has fixed vents or openings to the outside/ unconditioned spaces
		☐	In an unconditioned crawl space
		☐	In other unconditioned spaces
15			The scope of the project includes extending an existing duct system, which is constructed, insulated or sealed with asbestos.
16			The scope of the project includes an existing duct system that is documented to have been previously sealed as confirmed through field verification and diagnostic testing in accordance with procedures in the Reference Nonresidential Appendix NA2.
17	Yes		Duct system shall be sealed in acordance with the California Mechanical Code

M. COOLING TOWERS

This section does not apply to this project.

N. DECLARATION OF REQUIRED CERTIFICATES OF INSTALLATION

Selections have been made based on information provided in previous tables of this document. If any selection needs to be changed, please explain why in Table E Additional Remarks. These documents must be provided to the building inspector during construction and can be found online at https://www.energy.ca.gov/title24/2019standards/2019_compliance_documents/Nonresidential_Documents/NRCI/

Yes	No	Form/Title	Field Inspector Pass	Field Inspector Fail
●	○	NRCI-MCH-01-E - Must be submitted for all buildings	☐	☐

Registration Number: | Registration Date/Time: | Registration Provider: Energysoft

CA Building Energy Efficiency Standards - 2019 Nonresidential Compliance | Report Version: 2019.1.003 Schema Version: rev 20200601 | Report Generated: 2021-08-13 11:51:56

STATE OF CALIFORNIA
Mechanical Systems
NRCC-MCH-E
CALIFORNIA ENERGY COMMISSION

CERTIFICATE OF COMPLIANCE			**NRCC-MCH-E**
Project Name:	CSU Stanislaus CDC	**Report Page:**	**(Page 12 of 14)**
Project Address:	One University Circle	**Date Prepared:**	8/13/2021

O. DECLARATION OF REQUIRED CERTIFICATES OF ACCEPTANCE

Selections have been made based on information provided in previous tables of this document. If any selection needs to be changed, please explain why in Table E Additional Remarks. These documents must be provided to the building inspector during construction and can be found online at https://www.energy.ca.gov/title24/2019standards/2019_compliance_documents/Nonresidential_Documents/NRCA/

Yes	No	Form/Title	Systems To Be Field Verified	Field Inspector Pass	Field Inspector Fail
●	○	NRCA-MCH-02-A - Outdoor Air must be submitted for all newly installed HVAC units. Note: MCH-02-A can be performed in conjunction with MCH-07-A Supply Fan VFD Acceptance (if applicable) since testing activities overlap.		☐	☐
○	●	NRCA-MCH-03-A - Constant Volume Single Zone HVAC NOTE: This form does not automatically move to 'Yes'. If Constant Volume Single Zone HVAC Systems are included in the scope, permit applicant should move this form to 'Yes".		☐	☐
○	●	NRCA-MCH-04-A - Air Distribution Duct Leakage		☐	☐
●	○	NRCA-MCH-05-A - Air Economizer Controls		☐	☐
●	○	NRCA-MCH-06-A Demand Control Ventilation Systems must be submitted for all systems required to employ demand controlled ventilation (refer to §120.1(c)3) can vary outside ventilation flow rates based on maintaining interior carbon dioxide (CO_2) concentration setpoints.		☐	☐
●	○	NRCA-MCH-07-A Supply Fan Variable Flow Controls		☐	☐
○	●	NRCA-MCH-08-A Valve Leakage Test		☐	☐
○	●	NRCA-MCH-09-A Supply Water Temperature Reset Controls		☐	☐
○	●	NRCA-MCH-10-A Hydronic System Variable Flow Controls		☐	☐
●	○	NRCA-MCH-11-A Automatic Demand Shed Controls		☐	☐
○	●	NRCA-MCH-12-A FDD for Packaged Direct Expansion Units		☐	☐
●	○	NRCA-MCH-13-A Automatic FDD for Air Handling Units and Zone Terminal Units Acceptance		☐	☐
○	●	NRCA-MCH-14-A Distributed Energy Storage DX AC Systems Acceptance NOTE: This form does not automatically move to "Yes". If Distributed Energy System DX AC Systems are included in teh scope permit applicant should move this form to 'Yes".		☐	☐

Registration Number: | Registration Date/Time: | Registration Provider: Energysoft

CA Building Energy Efficiency Standards - 2019 Nonresidential Compliance | Report Version: 2019.1.003 Schema Version: rev 20200601 | Report Generated: 2021-08-13 11:51:56

STATE OF CALIFORNIA
Mechanical Systems
NRCC-MCH-E
CALIFORNIA ENERGY COMMISSION

CERTIFICATE OF COMPLIANCE			**NRCC-MCH-E**
Project Name:	CSU Stanislaus CDC	**Report Page:**	**(Page 13 of 14)**
Project Address:	One University Circle	**Date Prepared:**	8/13/2021

O. DECLARATION OF REQUIRED CERTIFICATES OF ACCEPTANCE

○	●	NRCA-MCH-15-A Thermal Energy Storage (TES) System Acceptance NOTE: This form does not automatically move to "Yes". If Chilled water Storage, Ice-on-Coil Internal Melt, Ice-on-Coil External melt, Ice Harvester, Brine, Ice-Slurry, Eutecti Salt, Clathrate Hydrate Slurry (CHS), Cryogenic or Encapsulated (Ice Ball) Systems are included in the scope, permit applicant should move this form to 'Yes".		☐	☐
●	○	NRCA-MCH-16-A Supply Air Temperature Reset Controls		☐	☐
○	●	NRCA-MCH-17-A Condenser Water Temperature Reset Controls		☐	☐
●	○	NRCA-MCH-18-A Energy Management Control Systems		☐	☐
○	●	NRCA-MCH-19-A Occupancy Sensor Controls		☐	☐
○	●	NRCA-MCH-20 Multi-Family Ventilation		☐	☐
○	●	NRCA-MCH-21 Multi-Family Envelope Leakage		☐	☐

P. DECLARATION OF REQUIRED CERTIFICATES OF VERIFICATION

Selections have been made based on information provided in previous tables of this document. If any selection needs to be changed, please explain why in Table E Additional Remarks. These documents must be completed by a HERS Rater and provided to the building inspector during construction. The final documents must be created by a HERS Provider's registry, but drafts can be found online at https://www.energy.ca.gov/title24/2019standards/2019_compliance_documents/Nonresidential_Documents/NRCV/

Yes	No	Form/Title	Field Inspector Pass	Field Inspector Fail
○	●	NRCV-MCH-04-H Duct Leakaage Test *NOTE: Must be completed by a HERS Rater*	☐	☐
○	●	NRCV-MCH-24 Enclosure Air Leakaage Worksheet *NOTE: Must be completed by a HERS Rater*	☐	☐
○	●	NRCV-MCH-27 High-rise Resdential *NOTE: Must be completed by a HERS Rater*	☐	☐
○	●	NRCV-MCH-32 Local Mechanical Exhaust *NOTE: Must be completed by a HERS Rater*	☐	☐

Q. MANDATORY MEASURES DOCUMENTATION LOCATION

This table is used to indicate where mandatory measures are documented in the plan set or construction documentation.

01		02
Compliance with Mandatory Measures documented through MCH Mandatory Measures Note Block	Yes	Plan sheet or construction document location: M-Sheets

Registration Number: | Registration Date/Time: | Registration Provider: Energysoft

CA Building Energy Efficiency Standards - 2019 Nonresidential Compliance | Report Version: 2019.1.003 Schema Version: rev 20200601 | Report Generated: 2021-08-13 11:51:56

STATE OF CALIFORNIA
Mechanical Systems
NRCC-MCH-E
CALIFORNIA ENERGY COMMISSION

CERTIFICATE OF COMPLIANCE			**NRCC-MCH-E**
Project Name:	CSU Stanislaus CDC	**Report Page:**	**(Page 14 of 14)**
Project Address:	One University Circle	**Date Prepared:**	8/13/2021

DOCUMENTATION AUTHOR'S DECLARATION STATEMENT

I certify that this Certificate of Compliance documentation is accurate and complete.

Documentation Author Name: Gary Leusink	Documentation Author Signature:
Company: Nexus Engineering Inc.	Signature Date: 2021-08-13
Address: 1400 Lone Palm Ave, Suite A	CEA/ HERS Certification Identification (if applicable): M35928
City/State/Zip: Modesto CA 95351	Phone: 209-572-7399

RESPONSIBLE PERSON'S DECLARATION STATEMENT

I certify the following under penalty of perjury, under the laws of the State of California:

1. The information provided on this Certificate of Compliance is true and correct.
2. I am eligible under Division 3 of the Business and Professions Code to accept responsibility for the building design or system design identified on this Certificate of Compliance (responsible designer)
3. The energy features and performance specifications, materials, components, and manufactured devices for the building design or system design identified on this Certificate of Compliance conform to the requirements of Title 24, Part 1 and Part 6 of the California Code of Regulations.
4. The building design features or system design features identified on this Certificate of Compliance are consistent with the information provided on other applicable compliance documents, worksheets, calculations, plans and specifications submitted to the enforcement agency for approval with this building permit application.
5. I will ensure that a completed signed copy of this Certificate of Compliance shall be made available with the building permit(s) issued for the building, and made available to the enforcement agency for all applicable inspections. I understand that a completed signed copy of this Certificate of Compliance is required to be included with the documentation the builder provides to the building owner at occupancy.

Responsible Designer Name: Allen Layman	Responsible Designer Signature:
Company: Nexus Engineering Inc.	Date Signed: 2021-08-13
Address: 1400 Lone Palm Ave, Suite A	License: M30029
City/State/Zip: Modesto CA 95351	Phone: 209-572-7399

Registration Number: | Registration Date/Time: | Registration Provider: Energysoft

CA Building Energy Efficiency Standards - 2019 Nonresidential Compliance | Report Version: 2019.1.003 Schema Version: rev 20200601 | Report Generated: 2021-08-13 11:51:56

STATE OF CALIFORNIA
Mechanical Systems
NRCC-MCH-E
CALIFORNIA ENERGY COMMISSION

CERTIFICATE OF COMPLIANCE			**NRCC-MCH-E**
Project Name:	CSU Stanislaus CDC	**Report Page:**	**(Page 7 of 14)**
Project Address:	One University Circle	**Date Prepared:**	8/13/2021

J. VENTILATION AND INDOOR AIR QUALITY

VAV-113 INFANT NAP 135B	Lecture/ postsecondary classroom	196			74.5	0	0	DCV	Provided per §120.1(d)4
								Occ Sensor	NA: Not required space type
VAV-114 MEETING 134	Conference/ meeting	405			202.5	0	0	DCV	Provided per §120.1(d)4
								Occ Sensor	NA: Not required space type
VAV-115 LAUND/RR 129, 124, 123	Office space	816.5			122.5	0	620	DCV	NA: Not required per §120.1(d)3
								Occ Sensor	NA: Not required space type
VAV-116 WORK 122	Break room	297			148.5	0	200	DCV	Provided per §120.1(d)4
								Occ Sensor	NA: Not required space type
VAV-117 South Entry 121	Break room	300			150	0	0	DCV	Provided per §120.1(d)4
								Occ Sensor	NA: Not required space type
VAV-118 KITCH 120,120A	Break room	663.7			331.8	0	1300	DCV	Provided per §120.1(d)4
								Occ Sensor	NA: Not required space type
VAV-119 PRE-K A 116,119,119A	Lecture/ postsecondary classroom	1029			391	0	0	DCV	Provided per §120.1(d)4
								Occ Sensor	NA: Not required space type

Registration Number: | Registration Date/Time: | Registration Provider: Energysoft

CA Building Energy Efficiency Standards - 2019 Nonresidential Compliance | Report Version: 2019.1.003 Schema Version: rev 20200601 | Report Generated: 2021-08-13 11:51:56

STATE OF CALIFORNIA
Mechanical Systems
NRCC-MCH-E
CALIFORNIA ENERGY COMMISSION

CERTIFICATE OF COMPLIANCE			**NRCC-MCH-E**
Project Name:	CSU Stanislaus CDC	**Report Page:**	**(Page 8 of 14)**
Project Address:	One University Circle	**Date Prepared:**	8/13/2021

J. VENTILATION AND INDOOR AIR QUALITY

VAV-120 Observ 118	Office space	249			37.4	0	200	DCV	NA: Not required per §120.1(d)3
								Occ Sensor	NA: Not required space type
VAV-121 Pre-K B 115,115A	Lecture/ postsecondary classroom	1019			387.2	0	0	DCV	Provided per §120.1(d)4
								Occ Sensor	NA: Not required space type
VAV-122 Office 124,125,126, 127	Office space	282			42.3	0	50	DCV	NA: Not required per §120.1(d)3
								Occ Sensor	NA: Not required space type
17	Total System Required Min OA CFM				4199	18	Ventilation for this System Complies?		Yes

[1] *FOOTNOTES: System CFM should include both mechanical and natural ventilation for the zone/system*

[2] *Air filtration requirements apply to the following three system types per §120.1(c)1A : space conditioning systems utilizing ducts to supply air to occupiable space; supply-only ventilation systems providing outside air to occupiable space; supply side of balanced ventilation systems including heat recovery and energy recovery ventilation systems providing outside air to occupiable space.*

[3] *Uniform Mechanical Code may have more stringent ventilation requirements; the most stringent code requirement takes precedence.*

[4] *See Standards Tables 120.1-A and 120.1-B.*

[5] *For lecture halls with fixed seating, the expected number of occupants shall be shall be determined in accordance with the California Building Code.*

[6] *§120.2(e)3 requires systems serving rooms that are required by §130.1(c) to have lighting occupancy sensing controls to also have occupancy sensing zone controls for ventilation. Examples of spaces which require lighting occupancy sensors include offices 250ft² or smaller, multipurpose rooms less than 1,000 ft², classrooms, conference rooms, restrooms, aisles and open areas in warehouses, library book stack aisles, corridors, stairwells, parking garages, and loading and unloading zones, unless excepted by §130.1(c).*

Registration Number: | Registration Date/Time: | Registration Provider: Energysoft

CA Building Energy Efficiency Standards - 2019 Nonresidential Compliance | Report Version: 2019.1.003 Schema Version: rev 20200601 | Report Generated: 2021-08-13 11:51:56

STATE OF CALIFORNIA
Mechanical Systems
NRCC-MCH-E
CALIFORNIA ENERGY COMMISSION

CERTIFICATE OF COMPLIANCE			**NRCC-MCH-E**
Project Name:	CSU Stanislaus CDC	**Report Page:**	**(Page 9 of 14)**
Project Address:	One University Circle	**Date Prepared:**	8/13/2021

K. TERMINAL BOX CONTROLS

This table is used to demonstrate compliance with prescriptive zone control requirements in §140.4(d).

01	02	03	04	05	06	07	08	09	10	11	12
		Design			Deadband Compliance			Reheated, Recooled, Mixed Air Compliance			
Zone/System/VAV Box Name or Item Tag	Zonal Control Strategy per §140.4(d)	Peak Primary Airflow CFM	Primary Air in Deadband CFM	Reheated Recooled Mixed Airflow CFM	Outside Air CFM	20% (30% if no DDC) of Peak Primary Airflow CFM	Max Deadband Airflow CFM	50% of Peak Primary Airflow	1st Stage Modulates <=95 °F and Maintains DB Rate?	2nd Stage Modulates from DB Flow to Heating Max Flow?	Complies
VAV-100 Toddles 108,111,111A	VAV with DDC @ zone	800	160	400	328.7	160	329.7	400	Yes	Yes	Yes
VAV-101 Observ 110	NA: Peak SA <= 300 CFM	300	60	150	120.1	60	121.1	150	Yes	Yes	Yes
VAV-102 Toddler 107,107A,109	VAV with DDC @ zone	780	156	390	343.5	156	344.5	390	Yes	Yes	Yes
VAV-103 Office 101, 102	VAV with DDC @ zone	425	85	210	75	85	86	212.5	Yes	Yes	Yes
VAV-104, Nap 107B	NA: Peak SA <= 300 CFM	225	45	110	50.5	45	51.5	112.5	Yes	Yes	Yes
VAV-105 Office 104,105,106	VAV with DDC @ zone	450	90	225	74.4	90	91	225	Yes	Yes	Yes
VAV-106 Hall 113,140, Lobby 103	VAV with DDC @ zone	890	178	445	320	178	321	445	Yes	Yes	Yes
VAV-107 NAP 119B	NA: Peak SA <= 300 CFM	225	45	110	58.8	45	59.8	112.5	Yes	Yes	Yes
VAV-108 INFANT NAP 139B	NA: Peak SA <= 300 CFM	160	32	80	73.3	32	74.3	80	Yes	Yes	Yes
VAV-109 Recep 100	VAV with DDC @ zone	350	70	175	32.6	70	71	175	Yes	Yes	Yes
VAV-110 INFANT 139, 136, 139A,139C	VAV with DDC @ zone	675	135	335	282.7	135	283.7	337.5	Yes	Yes	Yes
VAV-111 OBSERV 137,138	VAV with DDC @ zone	425	85	210	119.8	85	120.8	212.5	Yes	Yes	Yes
VAV-112 INFANT A 135,135A,135C	VAV with DDC @ zone	775	155	385	241.7	155	242.7	387.5	Yes	Yes	Yes

Registration Number: | Registration Date/Time: | Registration Provider: Energysoft

CA Building Energy Efficiency Standards - 2019 Nonresidential Compliance | Report Version: 2019.1.003 Schema Version: rev 20200601 | Report Generated: 2021-08-13 11:51:56

STATE OF CALIFORNIA
Mechanical Systems
NRCC-MCH-E
CALIFORNIA ENERGY COMMISSION

CERTIFICATE OF COMPLIANCE			**NRCC-MCH-E**
Project Name:	CSU Stanislaus CDC	**Report Page:**	**(Page 10 of 14)**
Project Address:	One University Circle	**Date Prepared:**	8/13/2021

K. TERMINAL BOX CONTROLS

VAV-113 INFANT NAP 135B	NA: Peak SA <= 300 CFM	175	35	85	74.5	35	75.5	87.5	Yes	Yes	Yes
VAV-114 MEETING 134	VAV with DDC @ zone	650	130	325	202.5	130	203.5	325	Yes	Yes	Yes
VAV-115 LAUND/RR 129, 124, 123	VAV with DDC @ zone	470	94	235	122.5	94	123.5	235	Yes	Yes	Yes
VAV-116 WORK 122	VAV with DDC @ zone	600	120	300	148.5	120	149.5	300	Yes	Yes	Yes
VAV-117 South Entry 121	VAV with DDC @ zone	400	80	200	150	80	151	200	Yes	Yes	Yes
VAV-118 KITCH 120,120A	VAV with DDC @ zone	1275	255	635	331.8	255	332.8	637.5	Yes	Yes	Yes
VAV-119 PRE-K A 116,119,119A	VAV with DDC @ zone	925	185	460	391	185	392	462.5	Yes	Yes	Yes
VAV-120 Observ 118	NA: Peak SA <= 300 CFM	300	60	150	120.1	60	121.1	150	Yes	Yes	Yes
VAV-121 Pre-K B 115,115A	VAV with DDC @ zone	900	180	450	387.2	180	388.2	450	Yes	Yes	Yes
VAV-122 Office 124,125,126,127	VAV with DDC @ zone	400	80	200	149.9	80	150.9	200	Yes	Yes	Yes

L. DISTRIBUTION (DUCTWORK and PIPING)

This table is used to show compliance with mandatory pipe insulation requirements found in §120.3 and prescriptive requirements found in §140.4(l) for duct leakage testing.

Duct Leakage Sealing

The answers to the questions below apply to the following duct systems:		Undefined System	Duct leakage testing triggered for these systems?	No
11	No	The scope of the project includes only duct systems serving healthcare facilities		
12	No	Duct system provides conditioned air to an occupiable space for a constant volume, single zone, space-conditioning system.		
13	No	The space conditioning system serves less than 5,000 ft² of conditioned floor area.		
14	No	The combined surface area of the ducts in the following locations is more than 25% of the total surface area of the entire duct system:		
		☐ Outdoors		

Registration Number: | Registration Date/Time: | Registration Provider: Energysoft

CA Building Energy Efficiency Standards - 2019 Nonresidential Compliance | Report Version: 2019.1.003 Schema Version: rev 20200601 | Report Generated: 2021-08-13 11:51:56

Office of the State Fire Marshal

OFFICE OF THE STATE FIRE MARSHAL
APPROVED FIRE AND PANIC ONLY
03/14/22
21-0498

Approval is for plan, sketch, design submittal or approval by omission or deviation from applicable regulations. Final approval is subject to field inspection. One set of approved plans shall be available on the project site at all times.

Division of the State Architect

APPROVED
DIV. OF THE STATE ARCHITECT
DSA-SS/CC-NC
SS ☐ FLS ☐ ACSB ☐
DATE 10/20/2021

CSUS CHILD DEVELOPMENT CENTER

CALIFORNIA STATE UNIVERSITY, STANISLAUS
ONE UNIVERSITY CIRCLE
TURLOCK, CA 95382

ehdd.
PIER 1, BAY 2
THE EMBARCADERO
SAN FRANCISCO, CA 94111
INFO@EHDD.COM
+1 415-285-9193

Consultant

nexus engineering

Consultant Name(s) and Address(es)
1400 Lone Palm Ave, Suite A
Modesto, CA 95351
Tel: 209.572.7399 Fax: 209.236.1579
NEXUSENGINEERING.NET
MECHANICAL ELECTRICAL PLUMBING
HVAC Plumbing/Piping Fire Sprinklers
Acoustical Engineering Refrigeration

Stamp

REGISTERED PROFESSIONAL ENGINEER — ALLEN LAYMAN — No. M30029 — STATE OF CALIFORNIA

Printing

Date	
06.25.2021	95% CONSTRUCTION DOCUMENTS
08.16.2021	PERMIT SET
12.21.2021	PERMIT SET - RESPONSE #1
12.21.2021	PERMIT SET - SEM

Revisions and Description — Date

Scale
12" = 1'-0"

Drawn by
GL

EHDD Job Number
KLA 20-2266

Sheet Title
ENERGY COMPLIANCE

Sheet Number
T24.02V3

STATE OF CALIFORNIA
Domestic Water Heating System
NRCC-PLB-E CALIFORNIA ENERGY COMMISSION

CERTIFICATE OF COMPLIANCE			NRCC-PLB-E
This document is used to demonstrate compliance for nonresidential occupancies with requirements in §110.1, §110.3, §120.3, and §140.5, and with requirements in §141.0 for additions and alterations, for domestic water heating scopes using the prescriptive path. For high-rise residential and hotel/motel occupancies compliance is demonstrated with requirements in §110.1, §110.3, §120.3, §150.0 and §150.1(c)8, and with requirements §150.2 for additions.			
Project Name:	CSU Stanislaus CDC	**Report Page:**	**(Page 1 of 6)**
Project Address:	One University Circle	**Date Prepared:**	8/13/2021

A. GENERAL INFORMATION

01	Project Location (city)	Turlock	02	Climate Zone	12
03	Occupancy Types Within Project (select all that apply):				
☒ Nonresidential	☐ High-Rise Residential	☐ Hotel/Motel			
☐ State Building	☐ Healthcare Facility	☐ Other (Write In)			

B. PROJECT SCOPE

This table includes domestic water heating systems that are within the scope of the permit application and are demonstrating compliance using the prescriptive paths outlined in §140.5, §150.1(c)8, and §141.0(a) or §141.0(b)2N for additions or alterations. Solar water heating systems are documented on the NRCC-SRA compliance document. Combined hydronic water heating systems are documented on the NRCC-MCH compliance document.

01	02	03		
My project consists of (check all that apply):	System Type[1,2]	System Components		
☒ New system (DHW system being installed for the first time in newly constructed building)	Individual System (serving nonresidential spaces)	☒ Equipment	☒ Distribution	☒ Controls
☐ System Alteration (equipment, distribution or controls)		☐ Equipment	☐ Distribution	☐ Controls

[1] *FOOTNOTES: Point of use water heaters, or other non-central systems used to serve nonresidential spaces, are considered individual systems.*
[2] *Dwelling units refers to hotel/motel guest rooms and units in a high-rise residential occupancy.*

STATE OF CALIFORNIA
Domestic Water Heating System
NRCC-PLB-E CALIFORNIA ENERGY COMMISSION

CERTIFICATE OF COMPLIANCE			NRCC-PLB-E
Project Name:	CSU Stanislaus CDC	**Report Page:**	**(Page 2 of 6)**
Project Address:	One University Circle	**Date Prepared:**	8/13/2021

C. COMPLIANCE RESULTS

Table C will indicate if the project data input into the compliance document is compliant with water heating requirements. If this table says "DOES NOT COMPLY" or "COMPLIES with Exceptional Conditions" refer to Table D, or the table indicated as not compliant for guidance.

01	02	03	04
Domestic Hot Water Equipment	Distribution Systems	Controls	**Compliance Results**
Table F	Table G	Table H	
Yes	Yes	Yes	COMPLIES

D. EXCEPTIONAL CONDITIONS

This table is auto-filled with uneditable comments because of selections made or data entered in tables throughout the form.

E. ADDITIONAL REMARKS

This table is includes remarks made by the permit applicant to the Authority Having Jurisdiction.

Registration Number: | Registration Date/Time: | Registration Provider: Energysoft
CA Building Energy Efficiency Standards - 2019 Nonresidential Compliance | Report Version: 2019.1.003 Schema Version: rev 20190401 | Report Generated: 2021-08-13 11:51:56

STATE OF CALIFORNIA
Domestic Water Heating System
NRCC-PLB-E CALIFORNIA ENERGY COMMISSION

CERTIFICATE OF COMPLIANCE			NRCC-PLB-E
Project Name:	CSU Stanislaus CDC	**Report Page:**	**(Page 3 of 6)**
Project Address:	One University Circle	**Date Prepared:**	8/13/2021

F. DOMESTIC HOT WATER EQUIPMENT

This table is used to demonstrate compliance with mandatory equipment requirements in §110.1 and §110.3. For high-rise residential and hotel/motel occupancies, compliance with prescriptive requirements in §150.1(c)8 must also be demonstrated and with §150.2 for addition and alteration scopes.

Equipment Schedule: Individual Systems

01	02	03	04	05	06
Name or Item Tag	Equipment Type	Volume (gal)	Max GPM/ First Hour Rating (FHR)	Rated Uniform Energy Factor (UEF)	Minimum Required Uniform Energy Factor (UEF)[1]
AO Smith DEN-80	Electric Storage	>75	FHR >=75	0.94	0.94

[1] *FOOTNOTE: Compliant equipment may be found in the Modernized Appliance Efficiency Database System (MAEDBS) on the Energy Commission website: https://cacertappliances.energy.ca.gov/Pages/Search/AdvancedSearch.aspx*

Water Heating Equipment All Occupancies

	Yes	No	Not Applicable	Requirement
18	☐	☐	☒	Unfired storage tank insulation shall have Internal + External >=R-16 OR External >=R-12. Label required per §110.3(c)3
19	☐	☐	☒	New state buildings 60% of energy for service water heating from site solar energy or recovered energy per §110.3(c)5
20	☐	☐	☒	Isolation valves for instantaneous water heater with input rating <6.8 kBTUH or 2 kW has been specified per §110.3(c)6

G. DOMESTIC HOT WATER DISTRIBUTION SYSTEM

This table is used to demonstrate compliance for nonresidential occupancies with distribution requirements in §120.3 and §140.5. For high-rise residential and hotel/motel occupancies, compliance is demonstrated with requirements §110.3(c), §120.3, §150.0, §150.1

Mandatory Pipe Insulation All Occupancies

12	☒	For systems serving nonresidential spaces, pipe insulation for the following applications is specified to comply with Table 120.3-A (see below) per §120.3 : • Recirculating system piping, including supply and return piping of the water heater • The first 8 ft of hot and cold outlet piping, including between storage tank and heat trap, for a nonrecirculating storage system • Pipes that are externally heated
13	☒	Insulation shall be protected from damage, including that due to sunlight, moisture, equipment maintenance, and wind. Insulation exposed to weather shall be installed with a cover suitable for outdoor service per §120.3(b) and §150.0(j)3

Registration Number: | Registration Date/Time: | Registration Provider: Energysoft
CA Building Energy Efficiency Standards - 2019 Nonresidential Compliance | Report Version: 2019.1.003 Schema Version: rev 20190401 | Report Generated: 2021-08-13 11:51:56

Division of the State Architect
DIV. OF THE STATE ARCHITECT
APP: 01-335838 INC:
SS ☐ FLS ☐ ACS ☐
DATE: 10/24/2022

Office of the State Fire Marshal

OFFICE OF THE STATE FIRE MARSHAL
APPROVED FIRE AND PANIC ONLY
03/14/22
2-4498
Approval is plan review only. Inspection by this office or approval by omission of disposition from applicable regulations. Final approval is subject to field inspection. One set of approved plans shall be available on the project site at all times.

CSUS CHILD DEVELOPMENT CENTER
CALIFORNIA STATE UNIVERSITY, STANISLAUS
ONE UNIVERSITY CIRCLE
TURLOCK, CA 95382

ehdd.

PIER 1, BAY 2
THE EMBARCADERO
SAN FRANCISCO, CA 94111
INFO@EHDD.COM
+1 415-285-9193

Consultant
nexus engineering
Consulting Mechanical Engineers
1400 Lone Palm Ave. Suite A
Modesto, CA 95351
Tel: 209.572.7999 Fax: 209.236.1579
www.nexusengineering.net
HVAC - Plumbing/Piping - Fire Sprinklers
Acoustical/Vibration Engineering - Refrigeration

Stamp
REGISTERED PROFESSIONAL ENGINEER
OF CALIFORNIA
933

Revisions and Description Date

Printing Date
95% CONSTRUCTION DOCUMENTS 06.25.2021
PERMIT SET 08.16.2021
PERMIT SET - ASI#1/2 11.15.2021
PERMIT SET - SEM 12.21.2021

Scale
12" = 1'-0"
Drawn by
Author
EHDD Job Number
KLA 20-2266
Sheet Title
ENERGY COMPLIANCE
Sheet Number
T24.03v3

STATE OF CALIFORNIA
Domestic Water Heating System
NRCC-PLB-E — CALIFORNIA ENERGY COMMISSION

CERTIFICATE OF COMPLIANCE			**NRCC-PLB-E**
Project Name:	CSU Stanislaus CDC	**Report Page:**	**(Page 4 of 6)**
Project Address:	One University Circle	**Date Prepared:**	8/13/2021

G. DOMESTIC HOT WATER DISTRIBUTION SYSTEM

TABLE 120.3-A PIPE INSULATION THICKNESS

Fluid Temperature Range (°F)	Conductivity Range (Btu-in per hour per ft² per °F)	Insulation Mean Rating Temp (°F)	Nominal Pipe Diameter (in)		
			< 1	1 to < 1.5	1.5 to < 4
			Minimum Insulation Required		
105-140	0.22 - 0.28	100	1.0 in or R-7.7	1.5 in or R-12.5	1.5 in or R-11

H. DOMESTIC HOT WATER CONTROLS

This table is used to demonstrate compliance with control requirements in §110.3 for all occupancies. For high-rise residential and hotel/motel occupancies, compliance is also demonstrated with requirements in §150.1(c)8.

	Yes	No	Not Applicable	Requirement
01	☒	☐	☐	Construction documents require manufacturer certification that service water-heating systems are equipped with automatic temperature controls capable of adjusting temperature settings per §110.3(a).
02	☐	☐	☒	Systems with capacity > 167,000 BTUH equipped with outlet temperature controls per §110.3(c)1 unless covered by California Plumbing Code 613.0.
03	☐	☐	☒	Controls for circulating pumps or electrical heat trace systems are capable of automatically turning off the system per §110.3(c)2 unless systems serves healthcare facility.
04	☐	☐	☒	For recirculation systems serving multiple dwelling units, design includes automatic pump controls per §150.1(c)8Bii, or §150.2 for additions or alterations.
05	☐	☐	☒	For recirculation systems serving individual dwelling units, design includes manual on/off controls as specified in Reference Appendix RA4.4.9 per §150.1(c)8.
06	☐	☐	☒	For replacement single heat pump water heaters serving individual dwelling units in climate zone 1-15, design includes communication interface that meets demand responsive control requirements of §110.12(a) per §150.2(b)1Hiii.

Registration Number: | Registration Date/Time: | Registration Provider: Energysoft

CA Building Energy Efficiency Standards - 2019 Nonresidential Compliance | Report Version: 2019.1.003 Schema Version: rev 20190401 | Report Generated: 2021-08-13 11:51:56

STATE OF CALIFORNIA
Domestic Water Heating System
NRCC-PLB-E — CALIFORNIA ENERGY COMMISSION

CERTIFICATE OF COMPLIANCE			**NRCC-PLB-E**
Project Name:	CSU Stanislaus CDC	**Report Page:**	**(Page 5 of 6)**
Project Address:	One University Circle	**Date Prepared:**	8/13/2021

I. DECLARATION OF REQUIRED CERTIFICATES OF INSTALLATION

Selections have been made based on information provided in this document. If any selection have been changed by permit applicant, an explanation should be included in Table E. Additional Remarks. These documents must be provided to the building inspector during construction and can be found online at https://www.energy.ca.gov/title24/2019standards/2019_compliance_documents/Nonresidential_Documents/NRCI/

Yes	No	Form/Title	Field Inspector Pass	Field Inspector Fail
●	○	NRCI-PLB-01-E - Must be submitted for all buildings	☐	☐
○	●	NRCI-PLB-02-E - Must be submitted for high-rise residential and hotel/motel central hot water distribution systems to be recognized for compliance.	☐	☐
○	●	NRCI-PLB-03-E - Must be submitted for high-rise residential and hotel/motel single dwelling unit hot water distribution systems to be recognized for compliance.	☐	☐

J.DECLARATION OF REQUIRED CERTIFICATES OF ACCEPTANCE

There are no Certificates of Acceptance applicable to service water heating requirements.

K. DECLARATION OF REQUIRED CERTIFICATES OF VERIFICATION

Selections have been made based on information provided in this document. If any selection have been changed by permit applicant, an explanation should be included in Table E. Additional Remarks. These documents must be completed by a HERS Rater and provided to the building inspector during construction. The final documents must be created by a HERS Providers registry, but drafts can be found online at https://www.energy.ca.gov/title24/2019standards/2019_compliance_documents/Nonresidential_Documents/NRCI/

Yes	No	Form/Title	Field Inspector Pass	Field Inspector Fail
○	●	NRCV-PLB-21-H High-rise Residential Central Hot Water Distribution HERS Verification	☐	☐
○	●	NRCV-PLB-22-H High-rise Residential Individual Dwelling Unit Hot Water Distribution HERS Verification	☐	☐

Registration Number: | Registration Date/Time: | Registration Provider: Energysoft

CA Building Energy Efficiency Standards - 2019 Nonresidential Compliance | Report Version: 2019.1.003 Schema Version: rev 20190401 | Report Generated: 2021-08-13 11:51:56

STATE OF CALIFORNIA
Domestic Water Heating System
NRCC-PLB-E — CALIFORNIA ENERGY COMMISSION

CERTIFICATE OF COMPLIANCE			**NRCC-PLB-E**
Project Name:	CSU Stanislaus CDC	**Report Page:**	**(Page 6 of 6)**
Project Address:	One University Circle	**Date Prepared:**	8/13/2021

DOCUMENTATION AUTHOR'S DECLARATION STATEMENT

I certify that this Certificate of Compliance documentation is accurate and complete.

Documentation Author Name: Gary Leusink	Documentation Author Signature:
Company: Nexus Engineering Inc.	Signature Date: 2021-08-13
Address: 1400 Lone Palm Ave, Suite A	CEA/ HERS Certification Identification (if applicable): M35928
City/State/Zip: Modesto CA 95351	Phone: 209-572-7399

RESPONSIBLE PERSON'S DECLARATION STATEMENT

I certify the following under penalty of perjury, under the laws of the State of California:

1. The information provided on this Certificate of Compliance is true and correct.
2. I am eligible under Division 3 of the Business and Professions Code to accept responsibility for the building design or system design identified on this Certificate of Compliance (responsible designer)
3. The energy features and performance specifications, materials, components, and manufactured devices for the building design or system design identified on this Certificate of Compliance conform to the requirements of Title 24, Part 1 and Part 6 of the California Code of Regulations.
4. The building design features or system design features identified on this Certificate of Compliance are consistent with the information provided on other applicable compliance documents, worksheets, calculations, plans and specifications submitted to the enforcement agency for approval with this building permit application.
5. I will ensure that a completed signed copy of this Certificate of Compliance shall be made available with the building permit(s) issued for the building, and made available to the enforcement agency for all applicable inspections. I understand that a completed signed copy of this Certificate of Compliance is required to be included with the documentation builder provides to the building owner at occupancy.

Responsible Designer Name: Allen Layman	Responsible Designer Signature:
Company: Nexus Engineering Inc.	Date Signed: 2021-08-13
Address: 1400 Lone Palm Ave, Suite A	License: M30029
City/State/Zip: Modesto CA 95351	Phone: 209-572-7399

Registration Number: | Registration Date/Time: | Registration Provider: Energysoft

CA Building Energy Efficiency Standards - 2019 Nonresidential Compliance | Report Version: 2019.1.003 Schema Version: rev 20190401 | Report Generated: 2021-08-13 11:51:56

Division of the State Architect

DIV. OF THE STATE ARCHITECT APP: 01-335838 INC: SSS ☐ FLS ☐ ACSE ☐ DATE: 10/24/2022

Office of the State Fire Marshal

OFFICE OF THE STATE FIRE MARSHAL
APPROVED FIRE AND PANIC ONLY
03/14/22
21-4498
Approval of this plan does not relieve owner or approve any omission or deviation from applicable regulations. Final approval is subject to field inspection. One set of approved plans shall be available on the project site at all times.

CSUS CHILD DEVELOPMENT CENTER
CALIFORNIA STATE UNIVERSITY, STANISLAUS
ONE UNIVERSITY CIRCLE
TURLOCK, CA 95382

ehdd.
PIER 1, BAY 2
THE EMBARCADERO
SAN FRANCISCO, CA 94111
INFO@EHDD.COM
+1 415-285-9193

Consultant

nexus engineering

Consultants Interdisciplinary Engineers
1400 Lone Palm Ave, Suite A
Modesto, CA 95351
Tel: 209.572.7399 Fax: 209.236.1579
www.nexusengineering.net
HVAC Plumbing/Piping Fire Sprinklers
Hydraulic/Fuel Engineering Refrigeration

Stamp

REGISTERED PROFESSIONAL ENGINEER — STATE OF CALIFORNIA — 933

Revisions and Description — Date

Printing — Date

95% CONSTRUCTION DOCUMENTS — 06.25.2021
PERMIT SET — 08.16.2021
PERMIT SET - ADDENDUM 1/2 — 12.21.2021
PERMIT SET - RFM — 12.21.2021

Scale
12" = 1'-0"

Drawn by
Author

EHDD Job Number
KLA 20-2266

Sheet Title
ENERGY COMPLIANCE

Sheet Number
T24.04v3

12/8/2021 2:01:33 PM

DOMESTIC WATER SIZING CALCULATION

WATER SIZING WORKSHEET PER 2019 CPC TABLE 610.3
AND 2019 CPC, APPENDIX A

				TABLE A-2 FIXTURE TYPE	MINIMUM BRANCH SIZE			
SOURCE DATA						QTY	FU	TOTAL
MIN. PRESSURE AVAILABLE:	52.0	PSI		BATHTUB/BATH-SHOWER COMB. (FILL)	1/2"	0	4.0	0.0
				BIDET	1/2"	0	1.0	0.0
DEMAND DATA				CLOTHESWASHER	1/2"	2	4.0	8.0
TOTAL FIXTURE UNITS:	138.0	F.U.		DENTAL UNIT, CUSPIDOR	1/2"	0	1.0	0.0
FIXTURE UNIT DEMAND:	76.0	GPM	CHART A 103.1(1)	DISHWASHER	1/2"	2	3.0	6.0
CONTINUOUS DEMAND:	0.0	GPM		DRINKING FOUNTAIN OR WATERCOOLER	1/2"	8	0.5	4.0
TOTAL DEMAND:	76.0	GPM		HOSE BIBB	1/2"	1	2.5	2.5
				HOSE BIBB (EACH ADDITIONAL)	1/2"	6	1.0	6.0
SOURCE TO PUMP				LAVATORY	1/2"	23	1.0	23.0
DISTANCE:	0	FT		LAWN SPRINKLER, EACH HEAD		0	1.0	0.0
ELEVATION CHANGE:	0	FT		SINK, BAR TYPE	1/2"	0	2.0	0.0
FRICTION LOSS:	0.0	PSI		SINK, CLINIC FAUCET	1/2"	0	3.0	0.0
TOTAL LOSS:	0.0	PSI		SINK, CLINIC FLUSHOMETER VALVE	1"	0	8.0	0.0
				SINK, KITCHEN DOMESTIC	1/2"	3	1.5	4.5
BOOSTER PUMP:	25	PSI		SINK, LAUNDRY	1/2"	0	1.5	0.0
				SINK, SERVICE OR MOP BASIN	1/2"	1	3.0	3.0
BUILDING SYSTEM				SINK, WASHUP (EACH SET OF FAUCETS)	1/2"	13	2.0	26.0
TOTAL DEVELOPED LENGTH TO				SHOWER	1/2"	0	2.0	0.0
MOST REMOTE FIXTURE:	410	FT		URINAL, 1.0 GPF	3/4"	0	4.0	0.0
ELEVATION TO HIGHEST FIXTURE:	4.0	FT		URINAL, >1.0 GPF	3/4"	0	5.0	0.0
METER:	5	PSI	TABLE A 102.2	URINAL, FLUSH TANK	1/2"	0	2.0	0.0
BACKFLOW PREVENTER:	12	PSI		WASHFOUNTAIN, CIRCULAR SPRAY	3/4"	0	4.0	0.0
SOFTENER:	0	PSI		WATER CLOSET, 1.6 GPF GRAVITY TANK	1/2"	0	2.5	0.0
FILTER:	0	PSI		WATER CLOSET, 1.6 GPF FLUSHOMETER TANK	1/2"	0	2.5	0.0
TOTAL BUILDING SYSTEM LOSS:	18.7	PSI		WATER CLOSET, 1.6 GPF FLUSHOMETER VALVE	1"	11	5.0	55.0
				WATER CLOSET > 1.6 GPF GRAVITY TANK	1/2"	0	5.0	0.0
				WATER CLOSET > 1.6 GPF FLUSHOMETER VALVE	1"	0	8.0	0.0
FLUSH VALVE SYSTEM (25 PSI RESID):	2.0	PSI/100'					TOTAL:	138
BUILDING SUPPLY PIPE SIZE:	2-1/2"	INCHES						

COLD WATER (FLUSH TANK 8 FPS MAX)

SIZE	DP/100'	GPM	F.U.	VEL IN FPS
1/2"	6.0	2.7	1	3.6
3/4"	6.0	7.0	8	4.8
1"	6.0	15.5	21	5.7
1 1/4"	6.0	26.0	44	6.8
1 1/2"	6.0	40.0	86	7.8
2"	4.6	72.0	236	8.0
2-1/2"	3.5	130.0	533	8.0

COLD WATER (FLUSH VALVE 8 FPS MAX)

SIZE	DP/100'	GPM	F.U.	VEL IN FPS
1-1/4"	2.0	15.0	-	3.3
1-1/2"	2.0	22.0	5	3.8
2"	2.0	45.0	37	4.8
2-1/2"	2.0	80.0	148	5.6

HOT WATER (5 FPS MAX)

SIZE	DP/100'	GPM	F.U.	VEL IN FPS
1/2"	6.0	2.7	3	4.2
3/4"	6.0	7.0	8	5.0
1"	4.7	13.5	18	5.0
1-1/4"	3.6	19.0	28	5.0
1-1/2"	3.0	28.0	49	5.0
2"	2.2	48.0	119	5.0

PLUMBING FIXTURE CONNECTION SCHEDULE

FIXTURE	SYMBOL	HOT WATER		COLD WATER		WASTE		VENT	TRAP
		BRANCH	OUTLET	BRANCH	OUTLET	BRANCH	OUTLET		
WATER CLOSET	WC	--	--	1-1/2"	1"	4"	3"	2"	--
LAVATORY	L	1/2"	1/2"	1/2"	1/2"	2"	1-1/4"	1-1/2"	1-1/2"
SINK	S	3/4"	1/2"	3/4"	1/2"	2"	1-1/4"	1-1/2"	1-1/2"
MOP SINK	MS	3/4"	1/2"	3/4"	1/2"	3"	3"	1-1/2"	3"
WASHING SINK	WS	3/4"	1/2"	3/4"	1/2"	3"	3"	1-1/2"	3"
FLOOR DRAIN	FD	--	--	--	--	2"	2"	1-1/2"	2"
DISHWASHER (BY OTHERS)	--	3/4"	3/4"	--	--	2"	2"	1-1/2"	2"
WALL BOX	WB-1	--	--	1/2"	1/2"	--	--	--	--
WALL BOX	WB-2	3/4"	3/4"	3/4"	3/4"	2"	2"	1-1/2"	2"

PLUMBING GENERAL NOTES

1. SCOPE:
   A COMPLETE DOMESTIC PLUMBING SYSTEM AS GENERALLY DELINEATED ON THE PLUMBING DRAWINGS, INCLUDING SERVICE PIPING AND FINAL CONNECTIONS TO EQUIPMENT FURNISHED AND INSTALLED BY OTHER TRADES AS MAY BE SHOWN ON THE ARCHITECTURAL, ELECTRICAL OR OTHER DRAWINGS OF THE CONTRACT DOCUMENTS.
2. CALIFORNIA CODE OF REGULATIONS:
   ALL HOT WATER DISTRIBUTION AND CIRCULATION LINES SHALL BE INSULATED IN ACCORDANCE WITH SECTION 120.3 OF THE CALIFORNIA CODE OF REGULATIONS, TITLE 24, PART 6, SUBCHAPTER 3.
3. ALL PLUMBING FIXTURES & EQUIPMENT USED (E.G. SHOWERHEADS, LAVATORY FAUCETS, SINK FAUCET AND WATER HEATERS) SHALL HAVE BEEN CERTIFIED TO THE CALIFORNIA ENERGY COMMISSION BY ITS MANUFACTURER TO COMPLY WITH THE EFFICIENCY STANDARDS FOR SUCH APPLIANCES.
4. CODES:
   ALL WORK, MATERIAL, AND EQUIPMENT SHALL BE FURNISHED AND INSTALLED IN COMPLIANCE WITH THE FOLLOWING CODES AS ADOPTED AND AMENDED BY THE INSPECTING AUTHORITY HAVING JURISDICTION. NOTHING IN THESE PLANS IS TO BE CONSTRUED TO PERMIT THE INSTALLATION OF WORK, MATERIAL OR EQUIPMENT NOT CONFORMING TO THESE OR OTHER CODES APPLICABLE TO THIS PROJECT.
   A. 2019 CALIFORNIA ADMINISTRATIVE CODE (CAC) PART 1, TITLE 24, CALIFORNIA CODE OF REGULATIONS (CCR)
   B. 2019 CALIFORNIA BUILDING CODE (CBC) PART 2, TITLE 24, CCR BASED ON THE 2018 INTERNATIONAL BUILDING CODE (IBC)
   C. 2019 CALIFORNIA ELECTRICAL CODE (CEC) PART 3, TITLE 24, CCR BASED ON THE 2018 NATIONAL ELECTRICAL CODE (NEC)
   D. 2019 CALIFORNIA MECHANICAL CODE (CMC) PART 4, TITLE 24, CCR BASED ON THE 2018 UNIFORM MECHANICAL CODE (UMC)
   E. 2019 CALIFORNIA PLUMBING CODE (CPC) PART 5, TITLE 24, CCR BASED ON THE 2018 UNIFORM PLUMBING CODE (UPC)
   F. 2019 CALIFORNIA ENERGY CODE (CEC) PART 6, TITLE 24 CCR.
   G. 2019 CALIFORNIA FIRE CODE (CFC) PART 9, TITLE 24, CCR BASED ON THE 2018 INTERNATIONAL FIRE CODE (IFC)
   H. 2019 CALIFORNIA GREEN BUILDING STANDARDS (CGBSC) PART 11, TITLE 24, CCR
5. WORKMANSHIP:
   ALL WORK SHALL BE DONE IN A NEAT AND WORKMANLIKE MANNER ACCORDING TO THE BEST TRADE PRACTICE BY THOSE SKILLED IN THE PARTICULAR TRADE. EQUIPMENT, FIXTURES, PIPING, ETC., SHALL BE PLUMB, LEVEL, SQUARE AND/OR CENTERED, ETC, EQUIPMENT TO BE INSTALLED IN STRICT COMPLIANCE WITH MANUFACTURER'S RECOMMENDATIONS.
6. EXISTING INFORMATION:
   LOCATION, SIZE, ELEVATION, MATERIAL, ETC., OF EXISTING UTILITIES IS PROVIDED FROM SOURCES DEEMED RELIABLE BUT IS NOT GUARANTEED. THE CONTRACTOR SHALL FIELD VERIFY ALL DATA BEFORE PROCEEDING WITH ANY WORK. NO EXTRA COST WILL BE ALLOWED FOR SERVICES NOT AS SHOWN.
7. PERMITS AND UTILITY SERVICE FEES:
   THE PLUMBING CONTRACTOR SHALL ARRANGE AND PAY FOR ALL PERMITS, INSPECTIONS, AND SERVICE CHARGES REQUIRED FOR THE INSTALLATION OF THE WORK.
8. ACCURACY:
   PLANS ARE DIAGRAMMATIC. THE CONTRACTOR SHALL CONFIRM ALL DIMENSIONS AND LOCATION OF WALLS, PARTITIONS, FIXTURES, ETC., AGAINST DESIGN PLANS FOR CONSISTENCY AND ACCURACY PRIOR TO COMMENCING WORK.
9. PROVIDE AND INSTALL CONDENSATE DRAIN WITH TRAP AT EACH A/C UNIT PER THE UPC, AT LOCATIONS SHOWN ON DRAWINGS. COORDINATE WITH MECHANICAL CONTRACTOR.
10. PROVIDE AND INSTALL ACCESS PANELS FOR ALL SHUT-OFF, ISOLATION, OR BRANCH VALVES NOT READILY ACCESSIBLE. ACCESS PANELS SHALL BE PROVIDED AND INSTALLED AT ALL TRAP PRIMER VALVES AND WATER HAMMER ARRESTORS.
11. ALL PIPING PASSING THROUGH CONCRETE FLOORS SHALL BE SLEEVED TO PROTECT PIPING AGAINST BREAKAGE.
12. HORIZONTAL DRAINAGE PIPING LESS THAN 4" IN DIAMETER SHALL BE SLOPED AT A MINIMUM OF 1/4" PER FOOT (2%) DRAINAGE PIPING 4" AND LARGER SHALL BE SLOPED AT A MINIMUM OF 1/4" PER FOOT (2%) UNLESS OTHERWISE APPROVED BY THE AHJ.
13. ALL PLUMBING FIXTURES AND PIPING SHALL BE LISTED BY AN APPROVED LISTING AND TESTING AGENCY AND PROPERLY LABELED.

PLUMBING MATERIAL SPECIFICATIONS

A. DWV (SS & V)
PIPE: ABS SCH 40 PIPE PER ASTM D 2661-2011
FITTINGS: ABS SCH. 40 FITTINGS PER D 2661-2011

B. DOMESTIC WATER (DCW, DHW & HWR)
PIPE: COPPER TYPE L PER ASTM B88-2009
FITTINGS: WROUGHT COPPER PER ASME B16.22-2013
INSULATION: INSULATE HOT WATER AND HOT WATER RETURNS AS FOLLOWS:
PIPE 3/4" & SMALLER = 1" FIBERGLASS INSULATION AND ALL-SERVICE-JACKET
PIPE BETWEEN 1" & 1-1/2" = 1-1/2" FIBERGLASS INSULATION AND ALL-SERVICE-JACKET
PIPE 2" & BIGGER = 2" FIBERGLASS INSULATION AND ALL-SERVICE-JACKET

C. CONDENSATE DRAIN (CD)
PIPE: COPPER TYPE M PER ASTM B-75
FITTINGS: WROUGHT COPPER PER ANSI 16.23

PLUMBING LEGEND

SYMBOL	ABBREVIATION	DESCRIPTION
	SS	SOIL, WASTE OR SANITARY SEWER BELOW FLOOR
	SS	SOIL, WASTE OR SANITARY SEWER OVERHEAD
	V	VENT PIPING
	CW	COLD WATER
	HW (110°, 140°)	HOT WATER SUPPLY
	HWR	HOT WATER RETURN
NG	G	NATURAL GAS - LOW PRESSURE
CD	CD	CONDENSATE DRAIN
OCD	OCD	OVERFLOW CONDENSATE DRAIN
	SD, RWL	STORM DRAIN, RAINWATER LEADER
	OFL	RAINWATER OVERFLOW LEADER (STORM)
	AAV	AUTOMATIC AIR VENT
	BV	BALL VALVE
		BRANCH - TOP CONNECTION
		BRANCH - BOTTOM CONNECTION
		BRANCH - SIDE CONNECTION
	BFV	BUTTERFLY VALVE
	CAP	CAP ON END OF PIPE
	CBV	CALIBRATED BALANCE VALVE
	CB, RD	CATCH BASIN, ROOF DRAIN
	CKV	CHECK VALVE
	CP	CIRCULATING PUMP
	CO	CLEANOUT PLUG
	CR	CONCENTRIC REDUCER
ø	DIA	DIAMETER
	ER	ECCENTRIC REDUCER
	FC	FLEXIBLE CONNECTOR
	FCO	FLOOR CLEANOUT
FD	FD	FLOOR DRAIN
	FS	FLOW SWITCH
	GCK	GAGE COCK
	GV	GATE VALVE
	GSCK, PC	GAS COCK, PLUG COCK
	GPR	GAS PRESSURE REGULATOR
	GL. V.	GLOBE VALVE
	GCO	GRADE CLEANOUT
	HB	HOSE BIBB
	AN	PIPE ANCHOR
	PG	PIPE GUIDE
	POC	POINT OF CONNECTION
	PRV	PRESSURE REDUCING VALVE
	PG	PRESSURE GAUGE
OR	RV or T&P	RELIEF VALVE OR TEMPERATURE & PRESSURE RELIEF VALVE
	SV	SOLENOID VALVE
	STR	STRAINER
	TH	THERMOMETER
TP	TP	TRAP PRIMER
	UN	UNION OR FLANGE
	WCO	WALL CLEANOUT
	AFF	ABOVE FINISHED FLOOR
	BFF	BELOW FINISHED FLOOR
	GPH	GALLONS PER HOUR
	GPM	GALLONS PER MINUTE
	SF	SQUARE FEET
	TYP	TYPICAL
	VTR	VENT THROUGH ROOF

SHEET INDEX - PLUMBING

P0.01	PLUMBING - LEGENDS & NOTES
P0.02	PLUMBING SCHEDULES & GREEN BUILDING NOTES
P1.01	PLUMBING - OVERALL FLOOR PLAN
P1.02	PLUMBING - ENLARGED FLOOR PLAN
P1.03	PLUMBING - ENLARGED FLOOR PLAN
P2.01	PLUMBING - ROOF PLAN
P5.01	PLUMBING - DETAILS
P5.02	PLUMBING - DETAILS

Division of the State Architect

APPROVED
DIV. OF THE STATE ARCHITECT
APP: 02-119316 INC:
REVIEWED FOR
SS☐ FLS☐ ACS☑
DATE: 03/24/2022

Office of the State Fire Marshal

OFFICE OF THE STATE FIRE MARSHAL
APPROVED FIRE AND PANIC ONLY
03/14/22
21-0498
Approval of this plan does not authorize or approve any omission or deviation from applicable requirements. Final approval is subject to field inspection. One set of approved plans shall be available on the project site at all times.

CSUS CHILD DEVELOPMENT CENTER

CALIFORNIA STATE
UNIVERSITY, STANISLAUS
ONE UNIVERSITY CIRCLE
TURLOCK, CA 95382

ehdd.

PIER 1, BAY 2
THE EMBARCADERO
SAN FRANCISCO, CA 94111

INFO@EHDD.COM
+1 415-285-9193

Consultant

neXus engineering
Consulting Mechanical Engineers
1400 Lone Palm Ave, Suite A
Modesto, CA 95351
Tel: 209.572.7399 Fax: 209.236.1579
www.nexusengineering.net
HVAC , Plumbing/Piping , Fire Sprinklers
Process/Plant Engineering , Refrigeration

Stamp

LEN LAWSON — 23996 — MECHANICAL — STATE OF CALIFORNIA — PROFESSIONAL ENGINEER

Printing	Date
95% CONSTRUCTION DOCUMENTS	06.25.2021
PERMIT SET	08.16.2021
PERMIT SET - DSA V2	12.15.2021
PERMIT SET - SFM	12.21.2021

Revisions and Description	Date

Scale
12" = 1'-0"

Drawn by
GL

EHDD Job Number
KLA 20-2266

Sheet Title
PLUMBING - LEGENDS & NOTES

Sheet Number
P0.01 V3

C:\Users\o.garcia\Documents\20251 CSUS Child Development MP 19_o.garcia@nexusengineering.net.rvt

12/8/2021 2:01:33 PM

PLUMBING GREEN BUILDING CODE NOTES

REQUIRED		REQUIRED	
	SECTION 5.301 GENERAL 5.301.1 SCOPE. THE PROVISIONS OF THIS CHAPTER SHALL ESTABLISH THE MEANS OF CONSERVING WATER USE INDOORS, OUTDOORS AND IN WASTEWATER CONVEYANCE.		SECTION 5.303 INDOOR WATER USE 5.303.1 METERS. SEPARATE SUBMETERS OR METERING DEVICES SHALL BE INSTALLED FOR THE USES DESCRIBED IN SECTIONS 5.303.1.1 AND 5.303.1.2.
	SECTION 5.302 DEFINITIONS 5.302.1 DEFINITIONS. THE FOLLOWING TERMS ARE DEFINED IN CHAPTER 2 (AND ARE INCLUDED HERE FOR REFERENCE)		5.303.1.1 BUILDINGS IN EXCESS OF 50,000 SQUARE FEET. SEPARATE SUBMETERS SHALL BE INSTALLED AS FOLLOWS: 1. FOR EACH INDIVIDUAL LEASED, RENTED OR OTHER TENANT SPACE WITHIN THE BUILDING PROJECTED TO CONSUME MORE THAN 100 GAL/DAY (380 L/DAY), INCLUDING, BUT NOT LIMITED TO, SPACES USED FOR LAUNDRY OR CLEANERS, RESTAURANT OR FOOD SERVICE, MEDICAL OR DENTAL OFFICE, LABORATORY, OR BEAUTY SALON OR BARBER SHOP.
	CONSTRUCTION SITE. A PARCEL OF LAND BOUNDED BY LOT LINE(S) OR A DESIGNATED PORTION OF A PUBLIC RIGHT-OF-WAY WHERE CONSTRUCTION IS TAKING PLACE. A CONSTRUCTION SITE MAY INCLUDE, BUT NOT BE LIMITED TO, BUILDINGS AND ACCESSORY STRUCTURES, WALKS, SIDEWALKS, CURBS, CURB RAMPS, PARKING FACILITIES, PLANTING AREAS, POOLS, PROMENADES, EXTERIOR GATHERING OR ASSEMBLY AREAS, RAISED OR DEPRESSED PAVED AREAS, OPEN SPACES, GOLF COURSES, AND/OR LANDSCAPE AREAS.		2. WHERE SEPARATE SUBMETERS FOR INDIVIDUAL BUILDING TENANTS ARE UNFEASIBLE, FOR WATER SUPPLIED TO THE FOLLOWING SUBSYSTEMS: A. MAKEUP WATER FOR COOLING TOWERS WHERE FLOW THROUGH IS GREATER THAN 500 GPM (30 L/S). B. MAKEUP WATER FOR EVAPORATIVE COOLERS GREATER THAN 6 GPM (0.04 L/S). C. STEAM AND HOT WATER BOILERS WITH ENERGY INPUT MORE THAN 500,000 BTU/H (147 KW).
	DISINFECTED TERTIARY RECYCLED WATER. FILTERED AND SUBSEQUENTLY DISINFECTED WASTEWATER THAT MEETS THE APPROVED METHOD OF TREATMENT AND MINIMUM LEVEL OF WATER QUALITY SPECIFIED IN CALIFORNIA CODE OF REGULATIONS, TITLE 22, DIVISION 4, CHAPTER 3 FOR THE PURPOSE OF DIRECT BENEFICIAL USE.		5.303.1.2 EXCESS CONSUMPTION. A SEPARATE SUBMETER OR METERING DEVICE SHALL BE PROVIDED FOR ANY TENANT WITHIN A NEW BUILDING OR WITHIN AN ADDITION THAT IS PROJECTED TO CONSUME MORE THAN 1,000 GAL/DAY.
	EVAPOTRANSPIRATION ADJUSTMENT FACTOR (ETAF) [DSA-SS]. AN ADJUSTMENT FACTOR WHEN APPLIED TO REFERENCE EVAPOTRANSPIRATION THAT ADJUSTS FOR PLANT FACTORS AND IRRIGATION EFFICIENCY, WHICH AE TWO MAJOR INFLUENCES ON THE AMOUNT OF WATER THAT NEEDS TO BE APPLIED TO THE LANDSCAPE.		5.303.3 WATER CONSERVING PLUMBING FIXTURES AND FITTINGS. PLUMBING FIXTURES (WATER CLOSETS AND URINALS) AND FITTINGS (FAUCETS AND SHOWERHEADS) SHALL COMPLY WITH THE FOLLOWING:
	FOOTPRINT AREA [DSA-SS]. THE TOTAL AREA OF THE FURTHEST EXTERIOR WALL OF THE STRUCTURE PROJECTED TO NATURAL GRADE, NOT INCLUDING EXTERIOR AREAS SUCH AS STAIRS, COVERED WALKWAYS, PATIOS AND DECKS.		
	GRAYWATER. PURSUANT TO HEALTH AND SAFETY CODE SECTION 17922.12, "GRAYWATER" MEANS UNTREATED WASTEWATER THAT HAS NOT BEEN CONTAMINATED BY ANY TOILET DISCHARGE, HAS NOT BEEN AFFECTED BY INFECTIOUS, CONTAMINATED, OR UNHEALTHY BODILY WASTES, AND DOES NOT PRESENT A THREAT FROM CONTAMINATION BY UNHEALTHFUL PROCESSING, MANUFACTURING, OR OPERATING WASTES. "GRAYWATER" INCLUDES, BUT IS NOT LIMITED TO WASTEWATER FROM BATHTUBS, SHOWERS, BATHROOM WASHBASINS, CLOTHES WASHING MACHINES AND LAUNDRY TUBS, BUT DOES NOT INCLUDE WASTE WATER FROM KITCHEN SINKS OR DISHWASHERS.	X	5.303.3.1 WATER CLOSETS. THE EFFECTIVE FLUSH VOLUME OF ALL WATER CLOSETS SHALL NOT EXCEED 1.28 GALLONS PER FLUSH. TANK-TYPE WATER CLOSETS SHALL BE CERTIFIED TO THE PERFORMANCE CRITERIA OF THE U.S. EPA WATERSENSE SPECIFICATION FOR TANK-TYPE TOILETS. NOTE: THE EFFECTIVE FLUSH VOLUME OF DUAL FLUSH TOILETS IS DEFINED AS THE COMPOSITE, AVERAGE FLUSH VOLUME OF TWO REDUCED FLUSHES AND ONE FULL FLUSH.
	METERING FAUCET. A SELF-CLOSING FAUCET THAT DISPENSES A SPECIFIC VOLUME OF WATER FOR EACH ACTUATION CYCLE. THE VOLUME OR CYCLE DURATION CAN BE FIXED OR ADJUSTABLE.		5.303.3.2 URINALS. 5.303.3.2.1 WALL-MOUNTED URINALS. THE EFFECTIVE VOLUME OF URINALS SHALL NOT EXCEED 0.125 GALLONS PER FLUSH. 5.303.3.2.2 FLOOR-MOUNTED URINALS. THE EFFECTIVE VOLUME OF URINALS SHALL NOT EXCEED 0.5 GALLONS PER FLUSH.
	MODEL WATER EFFICIENT LANDSCAPE ORDINANCE (MWELO). THE CALIFORNIA ORDINANCE REGULATING LANDSCAPE DESIGN, INSTALLATION AND MAINTENANCE PRACTICES THAT WILL ENSURE COMMERCIAL, MULTIFAMILY AND OTHER DEVELOPER INSTALLED LANDSCAPES GREATER THAN 2500 SQUARE FEET MEET AN IRRIGATION WATER BUDGET DEVELOPED BASED ON LANDSCAPED AREA AND CLIMATOLOGICAL PARAMETERS.		5.303.3.3 SHOWERHEADS. 5.303.3.3.1 SINGLE SHOWERHEAD. SHOWERHEADS SHALL HAVE A MAXIMUM FLOW RATE OF NOT MORE THAN 1.8 GALLONS PER MINUTE AT 80 PSI. SHOWERHEADS SHALL BE CERTIFIED TO THE PERFORMANCE CRITERIA OF THE U.S. EPA WATERSENSE SPECIFICATION FOR SHOWERHEADS.
	MODEL WATER EFFICIENT LANDSCAPE ORDINANCE (MWELO). [HCD] THE CALIFORNIA MODEL ORDINANCE (CALIFORNIA CODE OF REGULATIONS, TITLE 23, DIVISION 2, CHAPTER 2.7), REGULATING LANDSCAPE DESIGN, INSTALLATION AND MAINTENANCE PRACTICES. LOCAL AGENCIES ARE REQUIRED TO ADOPT THE UPDATED MWELO, OR ADOPT A LOCAL ORDINANCE AT LEAST AS EFFECTIVE AS THE MWELO.		5.303.3.3.2 MULTIPLE SHOWERHEADS SERVING ONE SHOWER. WHEN A SHOWER IS SERVED BY MORE THAN ONE SHOWERHEAD, THE COMBINED FLOW RATE OF ALL THE SHOWERHEADS AND/OR OTHER SHOWER OUTLETS CONTROLLED BY A SINGLE VALVE SHALL NOT EXCEED 1.8 GALLONS PER MINUTE AT 80 PSI, OR THE SHOWER SHALL BE DESIGNED TO ALLOW ONLY ONE SHOWER OUTLET TO BE IN OPERATION AT A TIME. NOTE: A HAND-HELD SHOWER SHALL BE CONSIDERED A SHOWERHEAD.
	POTABLE WATER. WATER THAT IS DRINKABLE AND MEETS THE U.S. ENVIRONMENTAL PROTECTION AGENCY (EPA) DRINKING WATER STANDARDS. SEE DEFINITION IN THE CALIFORNIA PLUMBING CODE, PART 5.		
	POTABLE WATER, [HCD] WATER THAT IS SATISFACTORY FOR DRINKING, CULINARY, AND DOMESTIC PURPOSES, AND MEETS THE U.S. ENVIRONMENTAL PROTECTION AGENCY (EPA) DRINKING WATER STANDARDS AND THE REQUIREMENTS OF THE HEALTH AUTHORITY HAVING JURISDICTION.	X	5.303.3.4 FAUCETS AND FOUNTAINS. 5.303.3.4.1 NONRESIDENTIAL LAVATORY FAUCETS. LAVATORY FAUCETS SHALL HAVE A MAXIMUM FLOW RATE OF NOT MORE THAN 0.5 GALLONS PER MINUTE AT 60 PSI.
	RECLAIMED (RECYCLED) WATER. NON-POTABLE WATER THAT MEETS CALIFORNIA STATE WATER RESOURCES CONTROL BOARD STATEWIDE UNIFORM CRITERIA FOR DISINFECTED TERTIARY RECYCLED WATER. RECLAIMED (RECYCLED) WATER IS ALSO KWOWN AS "RECYCLED WATER" OR "RECLAIMED WATER".		5.303.3.4.2 KITCHEN FAUCETS. KITCHEN FAUCETS SHALL HAVE A MAXIMUM FLOW RATE OF NOT MORE THAN 1.8 GALLONS PER MINUTE AT 60 PSI. KITCHEN FAUCETS MAY TEMPORARILY INCREASE THE FLOW ABOVE THE MAXIMUM RATE, BUT NOT TO EXCEED 2.2 GALLONS PER MINUTE AT 60 PSI, AND MUST DEFAULT TO A MAXIMUM FLOW RATE OF 1.8 GALLONS PER MINUTE AT 60 PSI.
	RECYCLED WATER. WATER WHICH, AS A RESULT OF TREATMENT OF WASTE, IS SUITABLE FOR A DIRECT BENEFICIAL USE OR A CONTROLLED USE THAT WOULD NOT OTHERWISE OCCUR [WATER CODE SECTION 13050 (N)]. SIMPLY PUT, RECYCLED WATER IS WATER TREATED TO REMOVE WASTE MATTER ATTAINING A QUALITY THAT IS SUITABLE TO USE THE WATER AGAIN.		5.303.3.4.3 WASH FOUNTAINS. WASH FOUNTAINS SHALL HAVE A MAXIMUM FLOW RATE OF NOT MORE THAN 1.8 GALLONS PER MINUTE/20 [RIM SPACE (INCHES) AT 60 PSI].
	RECYCLED WATER SUPPLY SYSTEM. THE BUILDING SUPPLY PIPE, THE WATER DISTRIBUTION PIPES, AND THE NECESSARY CONNECTING PIPES, FITTINGS, CONTROL VALVES, BACKFLOW PREVENTION DEVICES, AN ALL APPURTENACES CARRYING OR SUPPLYING RECLAIMED (RECYCLED) WATER IN OR ADJACENT TO THE BUILDING OR WITHIN THE PREMISES.		5.303.3.4.4 METERING FAUCETS. METERING FAUCETS SHALL NOT DELIVER MORE THAN 0.20 GALLONS PER CYCLE.
	SPECIAL LANDSCAPE AREA (SLA). [DSA-SS] AN AREA OF THE LANDSCAPE DEDICATED SOLELY TO EDIBLE PLANTS, PLANTING AREAS USED FOR EDUCATIONS PURPOSES, RECREATIONAL AREAS, AREAS IRRIGATED WITH RECYCLED WATER, WATER FEATURES USING RECYCLED WATER, AND WHERE TURF PROVIDES A PLAYING SURFACE OR GATHERING SPACE.		5.303.3.4.5 METERING FAUCETS FOR WASH FOUNTAINS. METERING FAUCETS FOR WASH FOUNTAINS SHALL HAVE A MAXIMUM FLOW RATE OF NOT MORE THAN 0.20 GALLONS PER MINUTE/20 [RIM SPACE (INCHES) AT 60 PSI]. NOTE: WHERE COMPLYING FAUCETS ARE UNAVAILABLE, AERATORS OR OTHER MEANS MAY BE USED TO ACHIEVE REDUCTION.
	SUBMETER. A METER INSTALLED SUBORDINATE TO A SITE METER. USUALLY USED TO MEASURE WATER INTENDED FOR ONE PURPOSE, SUCH AS LANDSCAPE IRRIGATION. FOR THE PURPOSES OF CALGREEN, A DEDICATED METER MAY BE CONSIDERED A SUBMETER.		5.303.4 COMMERCIAL KITCHEN EQUIPMENT.
			5.303.4.1 FOOD WASTE DISPOSERS. DISPOSERS SHALL EITHER MODULATE THE USE OF WATER TO NO MORE THAN 1 GPM WHEN THE DISPOSER IS NOT IN USE (NOT ACTIVELY GRINDING FOOD WASTE/NO-LOAD) OR SHALL AUTOMATICALLY SHUT OFF AFTER NO MORE THAN 10 MINUTES OF INACTIVITY. DISPOSERS SHALL USE NO MORE THAN 8 GPM OF WATER. NOTE: THIS CODE SECTION DOES NOT AFFECT LOCAL JURISDICTION AUTHORITY TO PROHIBIT OR REQUIRE DISPOSER INSTALLATION.
			5.303.5 AREAS OF ADDITION OR ALTERATION. FOR THOSE OCCUPANCIES WITHIN THE AUTHORITY OF THE CALIFORNIA BUILDING STANDARDS COMMISSION AS SPECIFIED IN SECTION 103, THE PROVISIONS OF SECTION 5.303.3 AND 5.303.4 SHALL APPLY TO NEW FIXTURES IN ADDITIONS OR AREAS OF ALTERATION TO THE BUILDING.
		X	5.303.6 STANDARDS FOR PLUMBING FIXTURES AND FITTINGS. PLUMBING FIXTURES AND FITTINGS SHALL BE INSTALLED IN ACCORDANCE WITH THE CALIFORNIA PLUMBING CODE, AND SHALL MEET THE APPLICABLE STANDARDS REFERENCED IN TABLE 1701.1 OF THE CALIFORNIA PLUMBING CODE AND IN CHAPTER 6 OF THIS CODE.

PLUMBING EQUIPMENT SCHEDULE

MARK	
WH-1	ELECTRIC WATER HEATER: 80 GALLON STORAGE, INSULATED TANK, 61 GPH RECOVERY @ 60°F RISE, TEMP 120°F, 480V, UNBALANCED THREE PHASE CONNECTION, 5000W/5000W SIMULTANEOUS ELEMENTS, 878 LBS, AO SMITH #DEN-80.
ET-1	EXPANSION TANK: EXPANSION TANK: 4.8 GALLON TANK, 2.9 ACCEPTANCE VOL., BUTYL DIAPHRAGM, BLADDER, MAX. OPERATING TEMPERATURE 210°F, MAX. WORKING PRESSURE 150PSI, 10.6" DIAMETER X 13.7 LONG, OP. WEIGHT 34 LBS, WELDED STEEL CONSTRUCTION, WESSELS #T-12.
CP-1	CIRCULATION PUMP: BRONZE BODY, POLYPROPYLENE IMPELLER, CERAMIC SHAFT, 3/4" UNION CONNECTIONS, 8 GPM @ 6'/HD, 115V, 1Ø, 1PH, 92 WATTS @.80 FLA, OP WT = 9.5 LBS, B&G #NBF-22. PROVIDE WITH OPTIONAL AUTOMATIC TIMER KIT AND AQUASTAT.

PLUMBING FIXTURE SCHEDULE

MARK	DESCRIPTION
WC-1	WATER CLOSET: WALL MOUNT, VITREOUS CHINA, WHITE, 1.1 GPF, INTEGRAL TRAP, DIRECT-FED SIPHON JET, FULLY-GLAZED 2-1/8" TRAPWAY, ELONGATED BOWL, TOP OF SEAT @ 17" HIGH, AMERICAN STANDARD "AFWAL" #3351.101.020. VALVE: SENSOR OPERATED, BATTERY POWERED, POLISHED CHROME, 1.1 GALLONS PER FLUSH, SLOAN "ECOS" #8111-1.1-OR. SEAT: HEAVY DUTY, OPEN FRONT, SELF-SUSTAINING HINGE, LESS COVER, AMERICAN STANDARD #5901.100SS. CARRIER: ZURN #Z1202-N4. INSTALL PER ACCESSIBILITY REQUIREMENTS.
WC-2	WATER CLOSET: WALL MOUNT, VITREOUS CHINA, WHITE, 1.1 GPF, INTEGRAL TRAP, DIRECT-FED SIPHON JET, FULLY-GLAZED 2-1/8" TRAPWAY, ELONGATED BOWL, AMERICAN STANDARD "AFWAL" #3351.101.020. VALVE: SENSOR OPERATED, BATTERY POWERED, POLISHED CHROME, 1.1 GALLONS PER FLUSH, SLOAN "ECOS" #8111-1.1-OR. SEAT: HEAVY DUTY, OPEN FRONT, SELF-SUSTAINING HINGE, LESS COVER, AMERICAN STANDARD #5901.100SS. CARRIER: ZURN #Z1202-N4.
WC-3	WATER CLOSET: FLOOR MOUNT, ELONGATED FLUSHOMETER BOWL, VITREOUS CHINA, WHITE, 1.28 OR 1.6/1.1 GPF, INTEGRAL TRAP, FULLY-GLAZED TRAPWAY, SIPHON JET, CHILDREN'S HEIGHT, 10" ROUGH-IN, AMERICAN STANDARD "BABY DEVORO" #2282.001.020. VALVE: SENSOR OPERATED, BATTERY POWERED, POLISHED CHROME, 1.1 GALLONS PER FLUSH, SLOAN "ECOS" #8111-1.1-OR. SEAT: ANTI-MICROBIAL, OPEN FRONT, WHITE, TOP OF SEAT @11" HIGH, AMERICAN STANDARD #5001G.055.020. INSTALL PER ACCESSIBILITY REQUIREMENTS.
WC-4	WATER CLOSET: FLOOR MOUNT, ELONGATED FLUSHOMETER BOWL, VITREOUS CHINA, WHITE, 1.28 OR 1.6/1.1 GPF, INTEGRAL TRAP, FULLY-GLAZED TRAPWAY, SIPHON JET, CHILDREN'S HEIGHT, 10" ROUGH-IN, AMERICAN STANDARD "BABY DEVORO" #2282.001.020. VALVE: SENSOR OPERATED, BATTERY POWERED, POLISHED CHROME, 1.1 GALLONS PER FLUSH, SLOAN "ECOS" #8111-1.1-OR. SEAT: ANTI-MICROBIAL, OPEN FRONT, WHITE, TOP OF SEAT @11" HIGH, AMERICAN STANDARD #5001G.055.020.
UR-1	URINAL: WALL MOUNT, VITREOUS CHINA, WHITE, FLUSH VALVE TYPE, 0.125 GALLON PER FLUSH, INTEGRAL TRAP, TOP SPUD, SIPHON JET, AMERICAN STANDARD "TRIMBROOK" #6561017.020 VALVE: EXPOSED, 0.125 GALLONS PER FLUSH, MANUAL FLUSH VALVE, SLOAN "ROYAL" #186-0.125. INSTALLED PER ACCESSIBILITY REQUIREMENTS.
L-1	LAVATORY: WALL MOUNT, VITREOUS CHINA, WHITE, 20-1/2"X18-1/4", CENTER HOLE, OVERFLOW, AMERICAN STANDARD "LUCERNE" #0356.421. FAUCET: POLISHED CHROME, SENSOR OPERATED, LONG TERM POWER SYSTEM (LTPS), 0.35 GPM VANDAL PROOF NON-AERATING OUTLET, SINGLE SUPPLY FOR TEMPERED WATER, CHICAGO #116.598.AB.4. THERMOSTATIC MIXING VALVE: SET AT 110°, CHICAGO #131-ABNF. CARRIER: ZURN #Z1231. PROVIDE P-TRAP, GRID STRAINER, SUPPLIES, AND ANGLE STOPS. INSTALL PER ACCESSIBILITY REQUIREMENTS.
L-2	LAVATORY: WALL MOUNT, VITREOUS CHINA, WHITE, 20-1/2"X18-1/4", CENTER HOLE, OVERFLOW, AMERICAN STANDARD "LUCERNE" #0356.421. FAUCET: POLISHED CHROME, SENSOR OPERATED, LONG TERM POWER SYSTEM (LTPS), 0.35 GPM VANDAL PROOF NON-AERATING OUTLET, SINGLE SUPPLY FOR TEMPERED WATER, CHICAGO #116.598.AB.4. THERMOSTATIC MIXING VALVE: SET AT 110°, CHICAGO #131-ABNF. CARRIER: ZURN #Z1231. PROVIDE P-TRAP, GRID STRAINER, SUPPLIES, AND ANGLE STOPS. SEE ARCHITECTURAL PLANS FOR ACCESSIBILITY AND HEIGHT REQUIREMENTS.
L-3	LAVATORY: DROP-IN, VITREOUS CHINA, OVAL, WHITE, CENTER HOLE, OVERFLOW, AMERICAN STANDARD "AQUALYN" #0475.047. FAUCET: POLISHED CHROME, SENSOR OPERATED, LONG TERM POWER SYSTEM (LTPS), 0.35 GPM VANDAL PROOF NON-AERATING OUTLET, SINGLE SUPPLY FOR TEMPERED WATER, CHICAGO #116.598.AB.4. THERMOSTATIC MIXING VALVE: SET AT 110°, CHICAGO #131-ABNF. PROVIDE P-TRAP, GRID STRAINER, SUPPLIES, AND ANGLE STOPS. INSTALL PER ACCESSIBILITY REQUIREMENTS.
S-1	SINK: COUNTER MOUNTED, SINGLE BOWL, 18 GA, 304 SS, 21" x 19", 6" DEEP, (3) HOLES ON 4" CENTERS, JUST #SL-ADA-1921-A-GR. FAUCET: CHROME PLATTED, 8" FIXED CENTERS, 1.5 GPM , 8" RIGID/SWING GOOSENECK, WRISTBLADES, "LOW-LEAD" DESIGN, CHICAGO #1100-GN8AE35-317AB. THERMOSTATIC MIXING VALVE: SET AT 110°, CHICAGO #131-ABNF. PROVIDE P-TRAP, BASKET STRAINER, SUPPLIES, AND ANGLE STOPS. INSTALL PER ACCESSIBILITY REQUIREMENTS.
S-2	SINK: COUNTER MOUNTED, SINGLE BOWL, 18 GA, 304 SS, 21" x 19", 6" DEEP, (3) HOLES ON 4" CENTERS, JUST #SL-ADA-1921-A-GR. FAUCET: CHROME PLATTED, 8" FIXED CENTERS, 1.5 GPM , 8" RIGID/SWING GOOSENECK, WRISTBLADES, "LOW-LEAD" DESIGN, CHICAGO #1100-GN8AE35-317AB. THERMOSTATIC MIXING VALVE: SET AT 110°, CHICAGO #131-ABNF. PROVIDE P-TRAP, BASKET STRAINER, SUPPLIES, AND ANGLE STOPS. INSTALL PER ACCESSIBILITY REQUIREMENTS.
S-3	SINK: COUNTER MOUNTED, SINGLE BOWL, 18 GA. 304 SS, 19" x 17.5", 6" DEEP, (1) HOLE CENTERED, JUST #SL-ADA-17519-A-GR. FAUCET: CHROME PLATTED, 8" FIXED CENTERS, 1.5 GPM , 8" RIGID/SWING GOOSENECK, WRISTBLADES, "LOW-LEAD" DESIGN, CHICAGO #1100-GN8AE35-317AB. THERMOSTATIC MIXING VALVE: SET AT 110°, CHICAGO #131-ABNF. PROVIDE P-TRAP, BASKET STRAINER, SUPPLIES, AND ANGLE STOPS. INSTALL PER ACCESSIBILITY REQUIREMENTS.
MS-1	MOP SINK: FLOOR MOUNT NEO ANGLE DROP FRONSINK, TERRAZZO, 24" x 24", 3" DRAIN, FLORESTONE #96. FAUCET: ROUGH CHROME FINISH, EXPOSED YOKE FAUCET, INTEGRAL VACUUM BREAKER, WALL BRACE, PAIL HOOK, 3/4" THREADED OUTLET WITH VACUUM BREAKER, BUILT-IN STOPS, T&S BRASS #B-0665-BSTR. PROVIDE WITH MOP HANGER AND 4' LONG 3/4" FILL HOSE.
WS-1	WASH TROUGH: (2) STATION, SINGLE BOWL, WALL HUNG TROUGH SINK, TYPE 304 STAINLESS STEEL, BUFFED SATIN FINISH, 48" WIDE x 20" FRONT TO BACK x 8" DEEP BASIN, ELKAY #EWMA482OC. FAUCET: (2) GOOSENECK FAUCET WITH WRISTBLADE HANDLES, ELKAY #LK940GN05T4H, INCLUDED WITH TROUGH SINK. DRAIN: ELKAY LK18B INCLUDED WITH TROUGH SINK INSTALL PER ACCESSIBILITY REQUIREMENTS.
DF-1	BARRIER FREE DUAL-HEIGHT DRINKING FOUNTAIN: WALL MOUNTED, INTEGRATED CHILLER, WATER BOTTLE FILLER WITH TOUCHLESS ACTIVATION, STAINLESS STEEL BASIN, VANDAL-RESISTANT BUBBLER, INTERNAL FILTER, FRONT AND SIDE PUSH BUTTONS. LAMINAR FLOW, NON-PRESSURIZED STAINLESS STEEL COOLING TANK, 8GPM CHILLING CAPACITY, 120V, 5FLA, ELKAY #LZSTL8WSLK. PROVIDE WITH NECESSARY MOUNTING HARDWARE. INSTALL PER ACCESSIBILITY REQUIREMENTS.
DF-2	SINGLE DRINKING FOUNTAIN: COUNTER MOUNTED, STAINLESS STEEL, NON-FILTERED, NON-REFRIGERATED, VANDAL RESISTANT, MECHANICAL PUSH BUTTON BUBBLER ACTIVATION, LEAD-FREE, ELKAY DRKR10C. PROVIDE WITH IN WALL CARRIER AND NECESSARY HARDWARE. SEE ARCHITECTURAL PLANS FOR ACCESSIBILITY AND HEIGHT REQUIREMENTS. GLASS FILLER: GOOSENECK SPOUT, ALL NECESSARY HARDWARE, ELKAY #96852CA
DF-3	SINGLE DRINKING FOUNTAIN: WALL MOUNTED, STAINLESS STEEL, NON-FILTERED, NON-REFRIGERATED, VANDAL RESISTANT, MECHANICAL FRONT BUBBLER BUTTON ACTIVATION, LEAD-FREE, ELKAY EDFPB114C. PROVIDE WITH IN WALL CARRIER AND NECESSARY HARDWARE. SEE ARCHITECTURAL PLANS FOR ACCESSIBILITY AND HEIGHT REQUIREMENTS.
TP-1	TRAP PRIMER: DIFFERENTIAL PRESSURE AUTOMATIC TYPE, CORROSION RESISTANT BRASS, INSTALL STRICTLY PER MANUFACTURERS RECOMMENDATIONS. PROVIDE ACCESS PANEL AS REQUIRED, PPP MODEL #PR-500 PROVIDE DISTRIBUTION UNIT AS NECESSARY, PPP MODEL #DU-U. ACCESS PANEL: 16 GA STEEL, PRIME COAT (PAINT TO MATCH ADJACENT SURFACE), SCREW DRIVER LATCH, PPP #D-1212PC
WB-1	WALL BOX: PLASTIC ICEMAKER WATER BOX WITH BALL VALVE, SPECIALTY PRODUCTS #OB-801-LL.
WB-2	WALL BOX: PLASTIC DRYER DRAIN & WASHING MACHINE OUTLET BOX WITH BALL VALVE, TWO DRAIN OUTLETS, COPPER SWEAT FITTINGS, SPECIALTY PRODUCTS #OB-713-T
HB-1	HOSE BIB: BRONZE BODY, KEY OPERATED, VACUUM BREAKER, CHROME FINISH, CHROME PLATED TAMER RESISTANT BOX, WOODFORD #B75.
HB-2	HOSE BIB: BRASS BODY, VACUUM BREAKER, CHROME FINISH, OPTIONAL METAL WHEEL HANDLE, WOODFORD #Y24.
FS-1	FLOOR SINK: CAST IRON, ACID RESISTANT, NO-HUB 3" OUTLET, ABS ANTI-SPLASH DOME STRAINER, PROVIDE WITH HALF GRATE, ZURN #FD2376-H.
FD-1	FLOOR DRAIN: CHROME PLATED TOP, HEEL PROOF, NO-HUB 2" OUTLET, ADJUSTABLE DRAIN TOP, ZURN #FD-2321ST.
FCO	FLOOR CLEAN OUT: 4" NO-HUB, TYPE 304 SS TOP, VANDAL-PROOF SCREWS, ZURN #Z1400-SZ.
WCO	WALL CLEAN OUT: NO-HUB, CAST IRON BODY, SMOOTH STAINLESS STEEL COVER, VANDAL-PROOF SCREWS, ZURN #Z1446.
WHA-1	WATER HAMMER ARRESTOR: LEAD FREE, NPT CONNECTION, 60 PSI PRE-LOAD, WATTS #LF15M2-B.
ALTERNATES:	
WM-1	WATER METER: DOMESTIC HOT WATER SERVICE, 1", NSF 61 CERTIFIED FOR "LOW LEAD," ELECTRONIC PROGRAMMABLE REGISTER, THERMAL PLASTIC EXTERIOR, DATA LOGGING FOR TOTALIZING, SENSUS iPERL, ADDITIVE ALTERNATE.

C:\Users\o.garcia\Documents\20251 CSUS Child Development MP 19_o.garcia@nexusengineering.net.rvt

Division of the State Architect

APPROVED
DIV. OF THE STATE ARCHITECT
APP: 02-119316 INC:
REVIEWED FOR
SS☐ FLS☐ ACS☑
DATE: 03/24/2022

Office of the State Fire Marshal

OFFICE OF THE STATE FIRE MARSHAL
APPROVED FIRE AND PANIC ONLY
03/14/22
21-0498
Approval of this plan does not authorize or approve any omission or deviation from applicable regulations. Final approval is subject to field inspection. One set of approved plans shall be available on the project site at all times.

CSUS CHILD DEVELOPMENT CENTER
CALIFORNIA STATE UNIVERSITY, STANISLAUS
ONE UNIVERSITY CIRCLE
TURLOCK, CA 95382

ehdd.
PIER 1, BAY 2
THE EMBARCADERO
SAN FRANCISCO, CA 94111
INFO@EHDD.COM
+1 415-285-9193

Consultant

neXus engineering
Consulting Mechanical Engineers
1400 Lone Palm Ave, Suite A
Modesto, CA 95351
Tel: 209.572.7399 Fax: 209.236.1579
www.nexusengineering.net
HVAC , Plumbing/Piping , Fire Sprinklers
Process/Plant Engineering , Refrigeration

Stamp

REGISTERED PROFESSIONAL ENGINEER
LEN LAVAY
No. M20905
MECHANICAL
STATE OF CALIFORNIA

Printing	Date
95% CONSTRUCTION DOCUMENTS	06.25.2021
PERMIT SET	08.16.2021
PERMIT SET - DSA V2	12.15.2021
PERMIT SET - SFM	12.21.2021

Revisions and Description	Date

Scale
12" = 1'-0"

Drawn by
GL

EHDD Job Number
KLA 20-2266

Sheet Title
PLUMBING SCHEDULES & GREEN BUILDING NOTES

Sheet Number
P0.02 V3

12/8/2021 2:01:36 PM

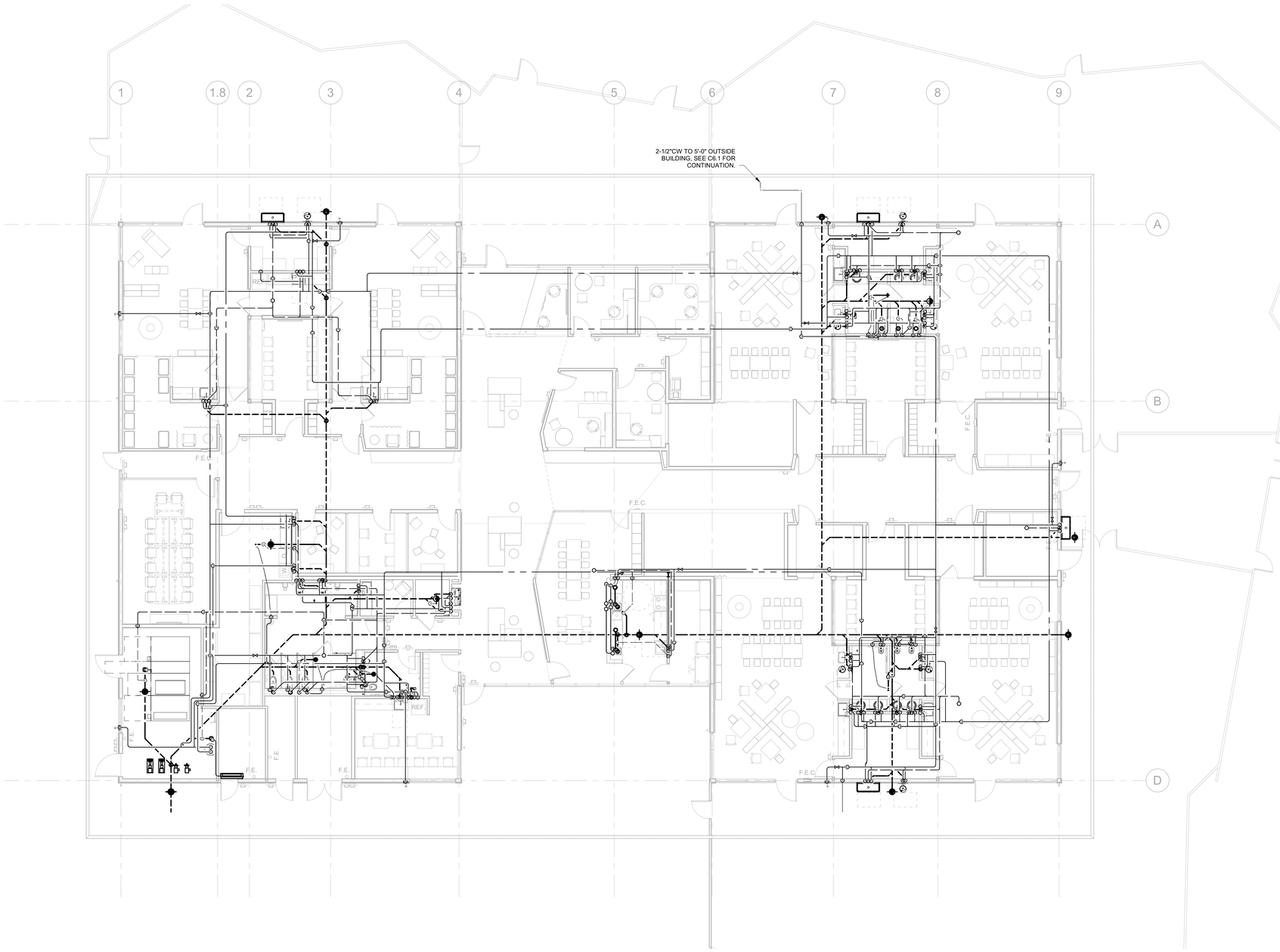

1 / P1.01 PLUMBING - OVERALL FLOOR PLAN
SCALE: 1/8" = 1'-0"

8' 0' 8' 16'

C:\Users\o.garcia\Documents\20251 CSUS Child Development MP 19_o.garcia@nexusengineering.net.rvt

Division of the State Architect

APPROVED
DIV. OF THE STATE ARCHITECT
APP: 02-119316 INC:
REVIEWED FOR
SS☐ FLS☐ ACS☑
DATE: 03/24/2022

Office of the State Fire Marshal

OFFICE OF THE STATE FIRE MARSHAL
APPROVED FIRE AND PANIC ONLY
03/14/22
21-0498
Approval of this plan does not authorize or approve any omission or deviation from applicable requirements. Final approval is subject to field inspection. One set of approved plans shall be available on the project site at all times.

CSUS CHILD DEVELOPMENT CENTER

CALIFORNIA STATE
UNIVERSITY, STANISLAUS
ONE UNIVERSITY CIRCLE
TURLOCK, CA 95382

ehdd.

PIER 1, BAY 2
THE EMBARCADERO
SAN FRANCISCO, CA 94111

INFO@EHDD.COM
+1 415-285-9193

Consultant

neXus engineering
Consulting Mechanical Engineers
1400 Lone Palm Ave, Suite A
Modesto, CA 95351
Tel: 209.572.7399 Fax: 209.236.1579
www.nexusengineering.net
HVAC , Plumbing/Piping , Fire Sprinklers
Process/Plant Engineering , Refrigeration

Stamp

REGISTERED PROFESSIONAL ENGINEER
LEN LAWSON
No. 29960
MECHANICAL
STATE OF CALIFORNIA

Printing	Date
95% CONSTRUCTION DOCUMENTS	06.25.2021
PERMIT SET	08.16.2021
PERMIT SET - DSA V2	12.15.2021
PERMIT SET - SFM	12.21.2021

Revisions and Description	Date

Scale
1/8" = 1'-0"

Drawn by
GL

EHDD Job Number
KLA 20-2266

Sheet Title
PLUMBING - OVERALL FLOOR PLAN

Sheet Number
P1.01 V3

12/8/2021 2:01:38 PM

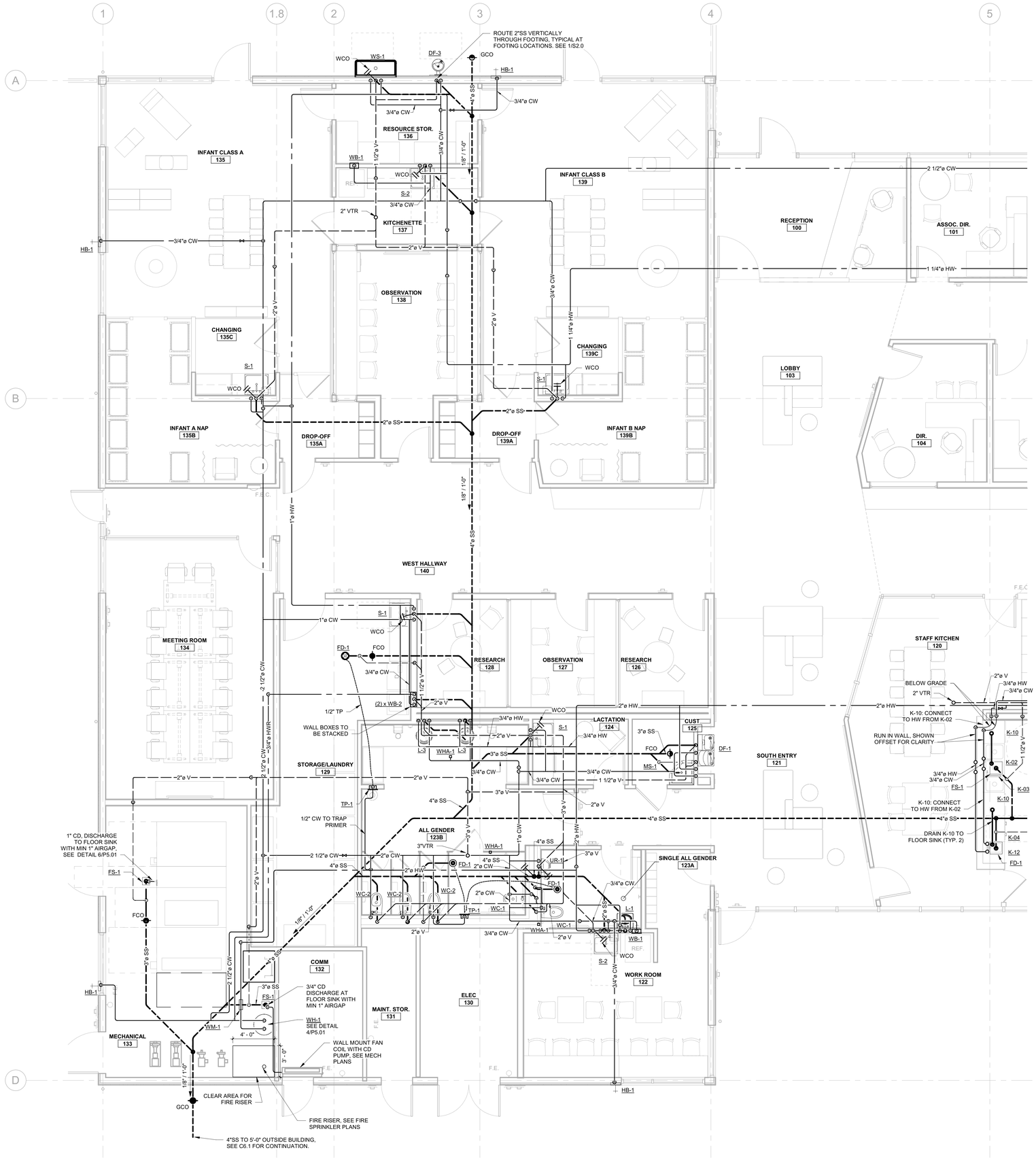

1 P1.02 PLUMBING - FLOOR PLAN - A

SCALE: 1/4" = 1'-0"

4' 0' 4' 8'

SHEET NOTES

1. ALL UNDERGROUD SS SHALL BE SLOPED AT 1/4" PER FOOT UNLESS OTHERWISE NOTED.

PIPE NOTED AS SLOPED AT 1/8" PER FOOT IS DUE TO STRUCTURE FEATURES MAKING 1/4" SLOPE IMPRACTICAL.

EQUIPMENT SCHEDULE

ITEM NO.	QTY	DESCRIPTION	REMARKS
K-01	1	HAND SINK	INSTALLED BY VENDOR, PLUMBER CONNECT HW, CW, SS AND V
K-02	1	THREE COMPARTMENT SINK, DROP-IN	INSTALLED BY VENDOR, PLUMBER CONNECT HW, CW, GS AND V
K-03	1	PRE-RINSE FAUCET ASSEMBLY WITH ADD ON FAUCET	INSTALLED BY VENDOR, PLUMBER CONNECT HW, CW, GS AND V
K-04	1	MOBILE DRAWER CABINET	INSTALLED BY VENDOR, NO PLUMBING
K-05	3	TRASH CONTAINER	NIKEC / BY OWNER-OPERATOR
K-06	1	RANGE 30"	INSTALLED BY VENDOR, NO PLUMBING
K-07	1	EXHAUST VENTILATOR	INSTALLED BY VENDOR, NO PLUMBING
K-08	0	OPEN NUMBER	
K-09	1	MICROWAVE	INSTALLED BY VENDOR, NO PLUMBING
K-10	2	DISHWASHER, UNCDERCOUNTER	INSTALLED BY VENDOR, PLUMBER CONNECT HW, AND GS
K-11	1	HEATED CABINET	INSTALLED BY VENDOR, NO PLUMBING
K-12	1	PREP SINK, DROP IN	INSTALLED BY VENDOR, PLUMBER CONNECT HW, CW, GS AND V
P-01	1	REACH-IN REFRIGERATOR	INSTALLED BY VENDOR, NO PLUMBING
P-02	3	60" SHELVING UNIT	INSTALLED BY VENDOR, NO PLUMBING
P-03	1	REACH-IN FREEZER	INSTALLED BY VENDOR, NO PLUMBING

Division of the State Architect

APPROVED
DIV. OF THE STATE ARCHITECT
APP: 02-119316 INC:
REVIEWED FOR
SS☐ FLS☐ ACS☑
DATE: 03/24/2022

Office of the State Fire Marshal

OFFICE OF THE STATE FIRE MARSHAL APPROVED FIRE AND PANIC ONLY

03/14/22
21-0498

Approval of this plan does not authorize or approve any omission or deviation from applicable regulations. Final approval is subject to field inspection. One set of approved plans shall be available on the project site at all times.

CSUS CHILD DEVELOPMENT CENTER

CALIFORNIA STATE UNIVERSITY, STANISLAUS
ONE UNIVERSITY CIRCLE
TURLOCK, CA 95382

ehdd

PIER 1, BAY 2
THE EMBARCADERO
SAN FRANCISCO, CA 94111

INFO@EHDD.COM
+1 415-285-9193

Consultant

neXus engineering
Consulting Mechanical Engineers
1400 Lone Palm Ave, Suite A
Modesto, CA 95351
Tel: 209.572.7399 Fax: 209.236.1579
www.nexusengineering.net
HVAC , Plumbing/Piping , Fire Sprinklers
Process/Plant Engineering , Refrigeration

Stamp

REGISTERED PROFESSIONAL ENGINEER LEN LAVAGNINO No. M 24012 MECHANICAL STATE OF CALIFORNIA

Printing	Date
95% CONSTRUCTION DOCUMENTS	06.25.2021
PERMIT SET	08.16.2021
PERMIT SET - DSA V2	12.15.2021
PERMIT SET - SFM	12.21.2021

Revisions and Description	Date

Scale
As indicated

Drawn by
GL

EHDD Job Number
KLA 20-2266

Sheet Title
PLUMBING - ENLARGED FLOOR PLAN

Sheet Number
P1.02 V3

C:\Users\o.garcia\Documents\20251 CSUS Child Development MP 19_o.garcia@nexusengineering.net.rvt

12/8/2021 2:01:40 PM

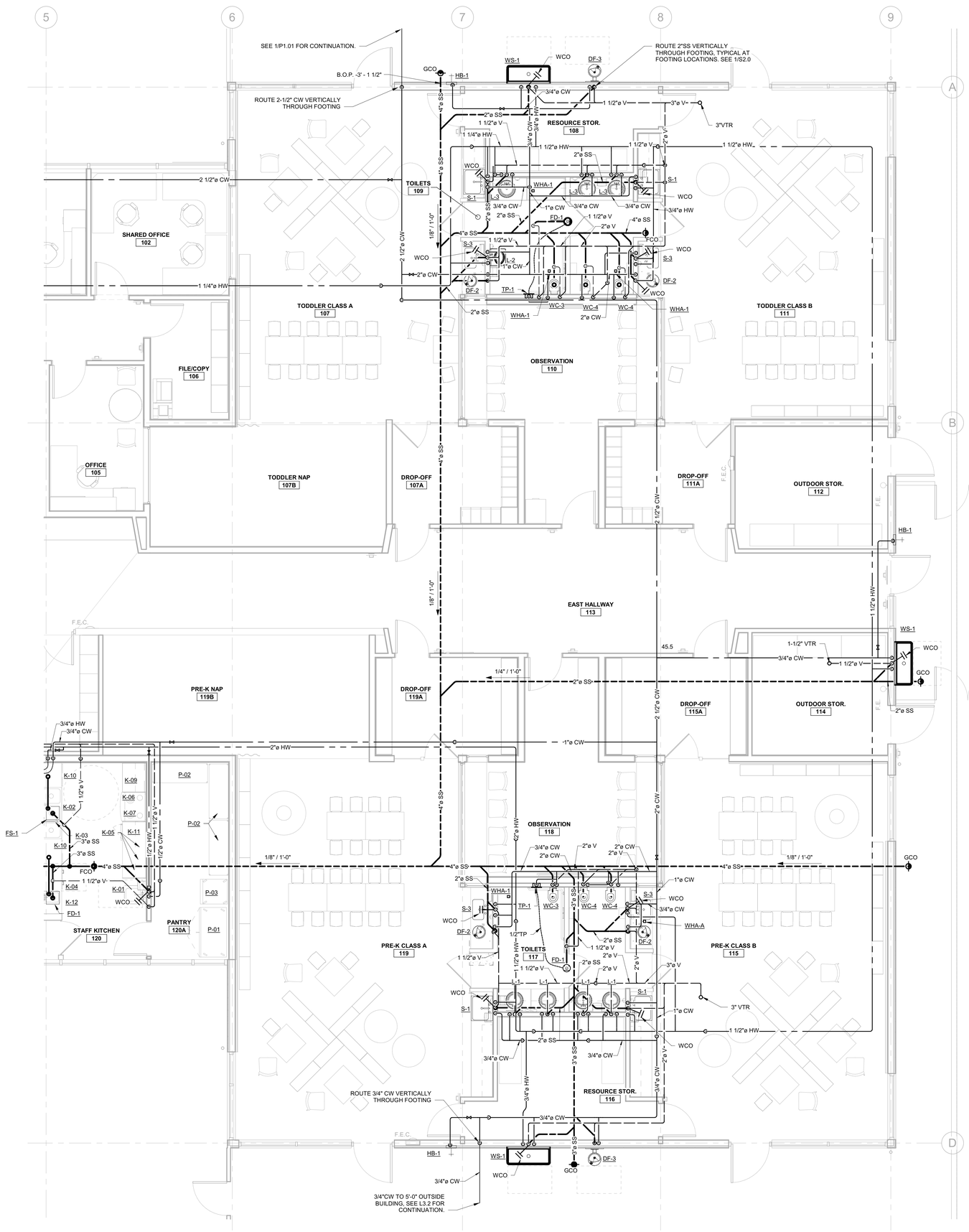

1 P1.03 PLUMBING - FLOOR PLAN - B
SCALE: 1/4" = 1'-0"

4' 0' 4' 8'

SHEET NOTES

1. ALL UNDERGROUD SS SHALL BE SLOPED AT 1/4" PER FOOT UNLESS OTHERWISE NOTED.

PIPE NOTED AS SLOPED AT 1/8" PER FOOT IS DUE TO STRUCTURE FEATURES MAKING 1/4" SLOPE IMPRACTICAL.

EQUIPMENT SCHEDULE

ITEM NO.	QTY	DESCRIPTION	REMARKS
K-01	1	HAND SINK	INSTALLED BY VENDOR, PLUMBER CONNECT HW, CW, SS AND V
K-02	1	THREE COMPARTMENT SINK, DROP-IN	INSTALLED BY VENDOR, PLUMBER CONNECT HW, CW, GS AND V
K-03	1	PRE-RINSE FAUCET ASSEMBLY WITH ADD ON FAUCET	INSTALLED BY VENDOR, PLUMBER CONNECT HW, CW, GS AND V
K-04	1	MOBILE DRAWER CABINET	INSTALLED BY VENDOR, NO PLUMBING
K-05	3	TRASH CONTAINER	NIKEC / BY OWNER-OPERATOR
K-06	1	RANGE 30"	INSTALLED BY VENDOR, NO PLUMBING
K-07	1	EXHAUST VENTILATOR	INSTALLED BY VENDOR, NO PLUMBING
K-08	0	OPEN NUMBER	
K-09	1	MICROWAVE	INSTALLED BY VENDOR, NO PLUMBING
K-10	2	DISHWASHER, UNCDERCOUNTER	INSTALLED BY VENDOR, PLUMBER CONNECT HW, AND GS
K-11	1	HEATED CABINET	INSTALLED BY VENDOR, NO PLUMBING
K-12	1	PREP SINK, DROP IN	INSTALLED BY VENDOR, PLUMBER CONNECT HW, CW, GS AND V
P-01	1	REACH-IN REFRIGERATOR	INSTALLED BY VENDOR, NO PLUMBING
P-02	3	60" SHELVING UNIT	INSTALLED BY VENDOR, NO PLUMBING
P-03	1	REACH-IN FREEZER	INSTALLED BY VENDOR, NO PLUMBING

Division of the State Architect

APPROVED
DIV. OF THE STATE ARCHITECT
APP: 02-119316 INC:
REVIEWED FOR
SS☐ FLS☐ ACS☑
DATE: 03/24/2022

Office of the State Fire Marshal

OFFICE OF THE STATE FIRE MARSHAL
APPROVED FIRE AND PANIC ONLY
03/14/22
21-0498
Approval of this plan does not authorize or approve any omission or deviation from applicable requirements. Final approval is subject to field inspection. One set of approved plans shall be available on the project site at all times.

CSUS CHILD DEVELOPMENT CENTER

CALIFORNIA STATE UNIVERSITY, STANISLAUS
ONE UNIVERSITY CIRCLE
TURLOCK, CA 95382

ehdd.

PIER 1, BAY 2
THE EMBARCADERO
SAN FRANCISCO, CA 94111

INFO@EHDD.COM
+1 415-285-9193

Consultant

neXus engineering
Consulting Mechanical Engineers
1400 Lone Palm Ave, Suite A
Modesto, CA 95351
Tel: 209.572.7399 Fax: 209.236.1579
www.nexusengineering.net
HVAC , Plumbing/Piping , Fire Sprinklers
Process/Plant Engineering , Refrigeration

Stamp

LEN LAWSON 24262 MECHANICAL REGISTERED PROFESSIONAL ENGINEER STATE OF CALIFORNIA

Printing	Date
95% CONSTRUCTION DOCUMENTS	06.25.2021
PERMIT SET	08.16.2021
PERMIT SET - DSA V2	12.15.2021
PERMIT SET - SFM	12.21.2021

Revisions and Description	Date

Scale
As indicated

Drawn by
GL

EHDD Job Number
KLA 20-2266

Sheet Title
PLUMBING - ENLARGED FLOOR PLAN

Sheet Number
P1.03 V3

C:\Users\o.garcia\Documents\20251 CSUS Child Development MP 19_o.garcia@nexusengineering.net.rvt

12/8/2021 2:01:43 PM

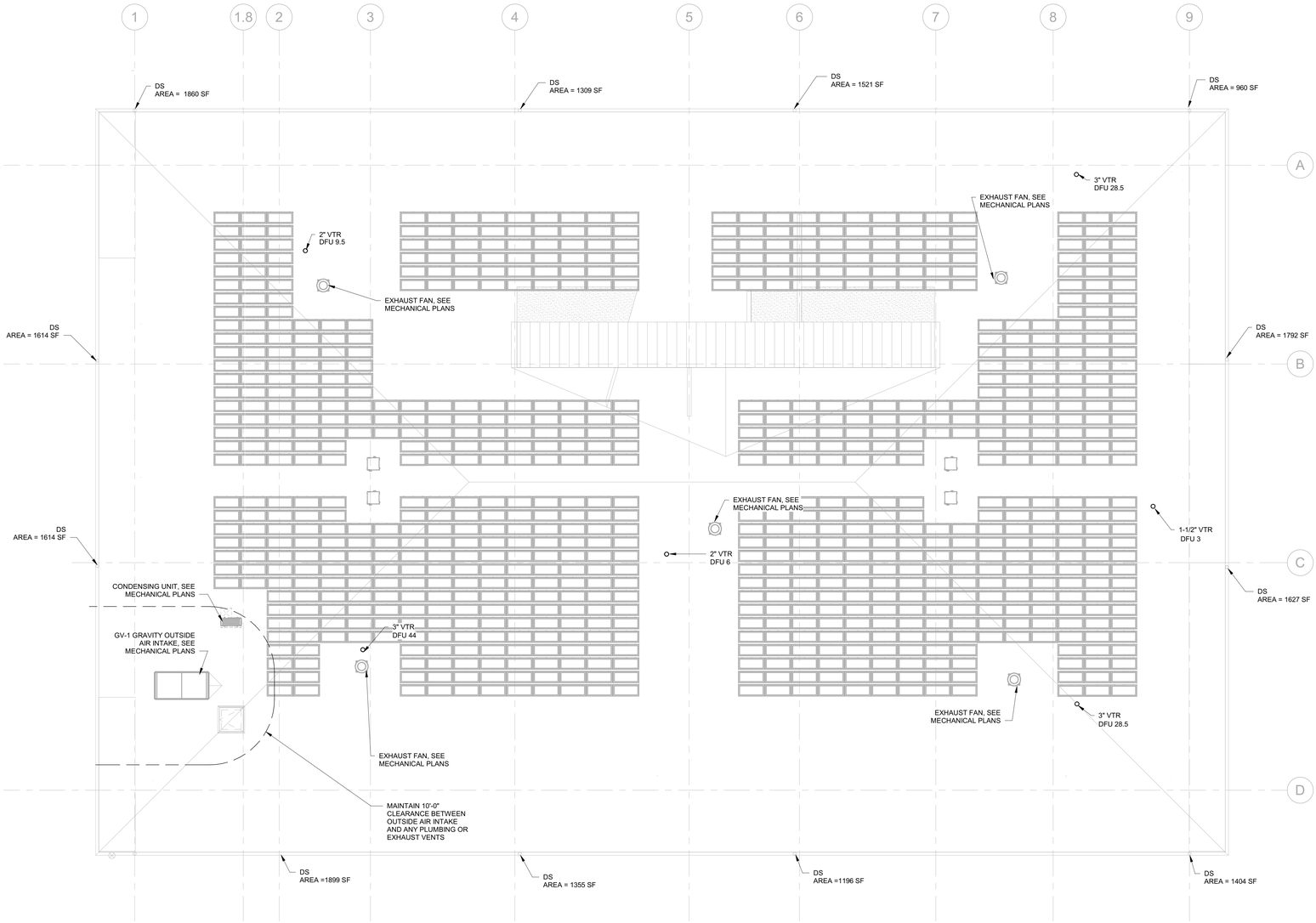

1 P2.01 PLUMBING - ROOF PLAN

SCALE: 1/8" = 1'-0"

8' 0' 8' 16'

C:\Users\o.garcia\Documents\20251 CSUS Child Development MP 19_o.garcia@nexusengineering.net.rvt

Division of the State Architect

APPROVED
DIV. OF THE STATE ARCHITECT
APP: 02-119316 INC:
REVIEWED FOR
SS☐ FLS☐ ACS☑
DATE: 03/24/2022

Office of the State Fire Marshal

OFFICE OF THE STATE FIRE MARSHAL
APPROVED FIRE AND PANIC ONLY
03/14/22
21-0498
Approval of this plan does not authorize or approve any omission or deviation from applicable requirements. Final approval is subject to field inspection. One set of approved plans shall be available on the project site at all times.

CSUS CHILD DEVELOPMENT CENTER

CALIFORNIA STATE
UNIVERSITY, STANISLAUS
ONE UNIVERSITY CIRCLE
TURLOCK, CA 95382

ehdd.

PIER 1, BAY 2
THE EMBARCADERO
SAN FRANCISCO, CA 94111

INFO@EHDD.COM
+1 415-285-9193

Consultant

neXus engineering
Consulting Mechanical Engineers
1400 Lone Palm Ave, Suite A
Modesto, CA 95351
Tel: 209.572.7399 Fax: 209.236.1579
www.nexusengineering.net
HVAC , Plumbing/Piping , Fire Sprinklers
Process/Plant Engineering , Refrigeration

Stamp

REGISTERED PROFESSIONAL ENGINEER
LEN LAWSON
No. M 24912
MECHANICAL
STATE OF CALIFORNIA

Printing	Date
95% CONSTRUCTION DOCUMENTS	06.25.2021
PERMIT SET	08.16.2021
PERMIT SET - DSA V2	12.15.2021
PERMIT SET - SFM	12.21.2021

Revisions and Description	Date

Scale
1/8" = 1'-0"

Drawn by
GL

EHDD Job Number
KLA 20-2266

Sheet Title
PLUMBING - ROOF PLAN

Sheet Number
P2.01 V3

12/8/2021 2:01:43 PM

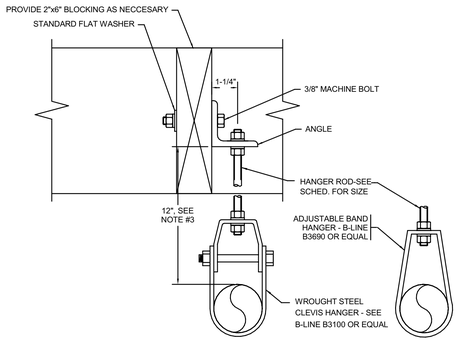

SEISMIC BRACING NOTES

ALL PIPE SHALL BE SEISMICALLY BRACED PER 2016 ASCE 7 MINIMUM DESIGN LOADS FOR BUILDINGS AND OTHER STRUCTURES, SECTION 13.6.8 AND 2019 TITLE 24, CALIFORNIA BUILDING CODE, PART 2, SECTION 1617A. THE CONTRACTOR MAY USE MASON WEST, INC. SEISMIC RESTRAINT GUIDELINE FOR SUSPENDED DISTRIBUTION SYSTEMS, THIRD EDITION, 2016 OR EQUAL. THE FOLLOWING EXCEPTIONS APPLY ACCORDING TO 2019 CBC 1617A.1.26.

1. INDEPENDENTLY SUPPORTED PIPE 3" DIA OR SMALLER WHERE PROVISIONS ARE MADE TO PREVENT OR PROTECT AGAINST IMPACT WITH OTHER BUILDING COMPONENTS.
2. TRAPEZE HUNG PIPES WHERE ALL PIPES MEET EXCEPTION #1 ABOVE AND TOTAL WEIGHT DOES NOT EXCEED 10 LB/FT.
3. INDEPENDENT OR TRAPEZE HUNG PIPE RUNS WHERE TOP OF PIPE DOES NOT EXCEED 12" BELOW THE STRUCTURAL ATTACHMENT POINT FOR THE ENTIRE RUN. WHERE ROD HANGERS ARE USED, THEY SHALL BE EQUIPPED WITH SWIVELS, EYE NUTS, OR OTHER DEVICES TO PREVENT BENDING IN THE ROD.

COPPER TUBE & PIPE HANGER SCHEDULE
HORIZONTAL SUPPORT
SOLDER OR BRAZED JOINTS

PIPE SIZE	HANGER ROD	MAX HORIZONTAL SPAN
1/2" - 1-1/2"	3/8"	6'
2" - 4"	3/8"	10'
6"	1/2"	10'

COPPER TUBE AND PIPE WITH SOLDER, BRAZED OR WELDED JOINTS, SIZES DEVELOPED FROM TABLE 313.3 & TABLE 313.6 OF THE 2019 CPC. ALL PIPE SHALL BE SUPPORTED WITHIN 18" OF A JOINT.

STEEL & BRASS PIPE HANGER SCHD FOR GAS
HORIZONTAL SUPPORT
PIPE W/ THREADED OR WELDED JOINTS

PIPE SIZE	HANGER ROD	MAX HORIZONTAL SPAN
1/2"	3/8"	6'
3/4" - 1"	3/8"	8'
1-1/4" - 4"	3/8"	10'

STEEL & BRASS PIPE FOR GAS - THREADED OR WELDED JOINTS, SIZES DEVELOPED FROM TABLE 313.3 & TABLE 313.6 OF THE 2019 CPC. ALL PIPE SHALL BE SUPPORTED WITHIN 18" OF A JOINT.

NO-HUB CAST IRON PIPE HANG SCHD
HORIZONTAL SUPPORT
PIPE W/ SHIELDED COUPLING

PIPE SIZE	HANGER ROD	MAX HORIZONTAL SPAN
2"	3/8"	(1, 2, 3, 4)
2-1/2"	3/8"	(1, 2, 3, 4)
3"	3/8"	(1, 2, 3, 4)
4"	3/8"	(1, 2, 3, 4)

CAST IRON HUBLESS PIPE WITH SHIELDED COUPLINGS, SIZES DEVELOPED FROM TABLE 313.6 & TABLE 331.3 OF THE 2019 CPC.
1.) SUPPORT AT EVERY OTHER JOINT, UNLESS OVER 4'-0" THEN SUPPORT EACH JOINT. 2.) SUPPORT ADJACENT TO JOINT, NOT TO EXCEED 18". 3.) SUPPORT EACH HORIZONTAL BRANCH CONNECTION. 4.) HANGERS SHALL NOT BE PLACED ON THE COUPLING.

1 P5.01 **PIPE HANGER DETAIL**
SCALE: NONE

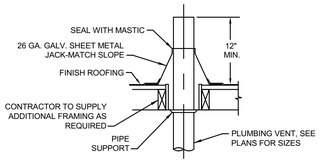

2 P5.01 **VENT THROUGH ROOF DETAIL**
SCALE: NONE

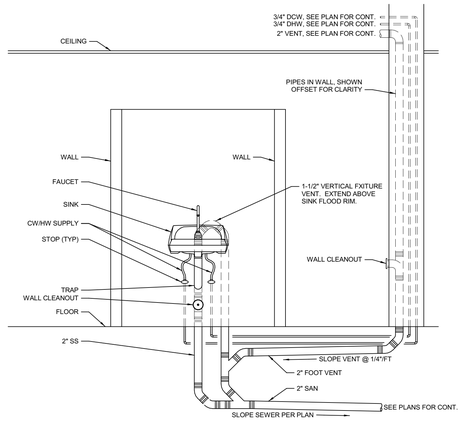

3 P5.01 **ISLAND VENT DETAIL**
SCALE: NONE

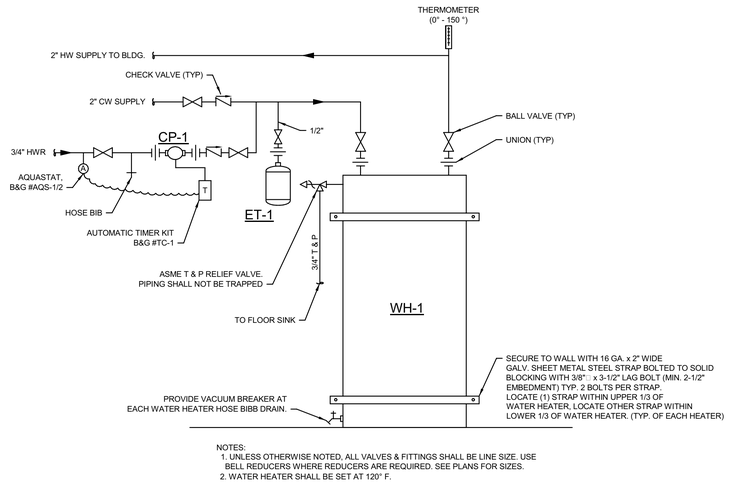

NOTES.
1. UNLESS OTHERWISE NOTED, ALL VALVES & FITTINGS SHALL BE LINE SIZE. USE BELL REDUCERS WHERE REDUCERS ARE REQUIRED. SEE PLANS FOR SIZES.
2. WATER HEATER SHALL BE SET AT 120° F.

4 P5.01 **ELECTRIC WATER HEATER DETAIL**
SCALE: NONE

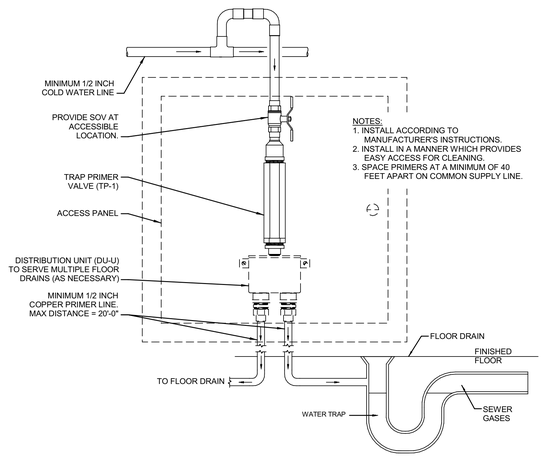

NOTES:
1. INSTALL ACCORDING TO MANUFACTURER'S INSTRUCTIONS.
2. INSTALL IN A MANNER WHICH PROVIDES EASY ACCESS FOR CLEANING.
3. SPACE PRIMERS AT A MINIMUM OF 40 FEET APART ON COMMON SUPPLY LINE.

5 P5.01 **TRAP PRIMER DETAIL**
SCALE: NONE

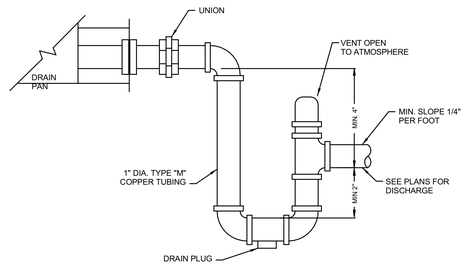

6 P5.01 **AIR CONDITIONING UNIT DRAIN TRAP DETAIL**
SCALE: NONE

C:\Users\o.garcia\Documents\20251 CSUS Child Development MP 19_o.garcia@nexusengineering.net.rvt

Division of the State Architect

APPROVED
DIV. OF THE STATE ARCHITECT
APP: 02-119316 INC:
REVIEWED FOR
SS☐ FLS☐ ACS☑
DATE: 03/24/2022

Office of the State Fire Marshal

OFFICE OF THE STATE FIRE MARSHAL
APPROVED FIRE AND PANIC ONLY
03/14/22
21-0498
Approval of this plan does not authorize or approve any omission or deviation from applicable requirements. Final approval is subject to field inspection. One set of approved plans shall be available on the project site at all times.

CSUS CHILD DEVELOPMENT CENTER

CALIFORNIA STATE UNIVERSITY, STANISLAUS
ONE UNIVERSITY CIRCLE
TURLOCK, CA 95382

ehdd.

PIER 1, BAY 2
THE EMBARCADERO
SAN FRANCISCO, CA 94111

INFO@EHDD.COM
+1 415-285-9193

Consultant

neXus engineering
Consulting Mechanical Engineers
1400 Lone Palm Ave, Suite A
Modesto, CA 95351
Tel: 209.572.7399 Fax: 209.236.1579
www.nexusengineering.net
HVAC , Plumbing/Piping , Fire Sprinklers
Process/Plant Engineering , Refrigeration

Stamp

Printing	Date
95% CONSTRUCTION DOCUMENTS	06.25.2021
PERMIT SET	08.16.2021
PERMIT SET - DSA V2	12.15.2021
PERMIT SET - SFM	12.21.2021

Revisions and Description			Date
PR	1	PLAN REVIEW 1	08.16.2021

Scale
12" = 1'-0"

Drawn by
GL

EHDD Job Number
KLA 20-2266

Sheet Title
PLUMBING - DETAILS

Sheet Number
P5.01 V3

12/8/2021 2:01:43 PM

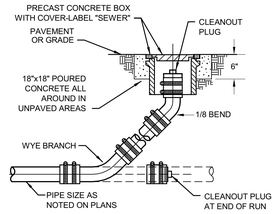

1 P5.02 CLEANOUT TO GRADE DETAIL

SCALE: NONE

Division of the State Architect

APPROVED
DIV. OF THE STATE ARCHITECT
APP: 02-119316 INC:
REVIEWED FOR
SS☐ FLS☐ ACS☑
DATE: 03/24/2022

Office of the State Fire Marshal

OFFICE OF THE STATE FIRE MARSHAL
APPROVED FIRE AND PANIC ONLY
03/14/22
21-0498
Approval of this plan does not authorize or approve any omission or deviation from applicable regulations. Final approval is subject to field inspection. One set of approved plans shall be available on the project site at all times.

CSUS CHILD DEVELOPMENT CENTER

CALIFORNIA STATE
UNIVERSITY, STANISLAUS
ONE UNIVERSITY CIRCLE
TURLOCK, CA 95382

ehdd.

PIER 1, BAY 2
THE EMBARCADERO
SAN FRANCISCO, CA 94111

INFO@EHDD.COM
+1 415-285-9193

Consultant

neXus engineering
Consulting Mechanical Engineers
1400 Lone Palm Ave, Suite A
Modesto, CA 95351
Tel: 209.572.7399 Fax: 209.236.1579
www.nexusengineering.net
HVAC , Plumbing/Piping , Fire Sprinklers
Process/Plant Engineering , Refrigeration

Stamp

LEN LAWNICKI
No. 24172
MECHANICAL
STATE OF CALIFORNIA

Printing	Date
95% CONSTRUCTION DOCUMENTS	06.25.2021
PERMIT SET	08.16.2021
PERMIT SET - DSA V2	12.15.2021
PERMIT SET - SFM	12.21.2021

Revisions and Description	Date

Scale
12" = 1'-0"

Drawn by
Author

EHDD Job Number
KLA 20-2266

Sheet Title
PLUMBING - DETAILS

Sheet Number
P5.02 V3

C:\Users\o.garcia\Documents\20251 CSUS Child Development MP 19_o.garcia@nexusengineering.net.rvt

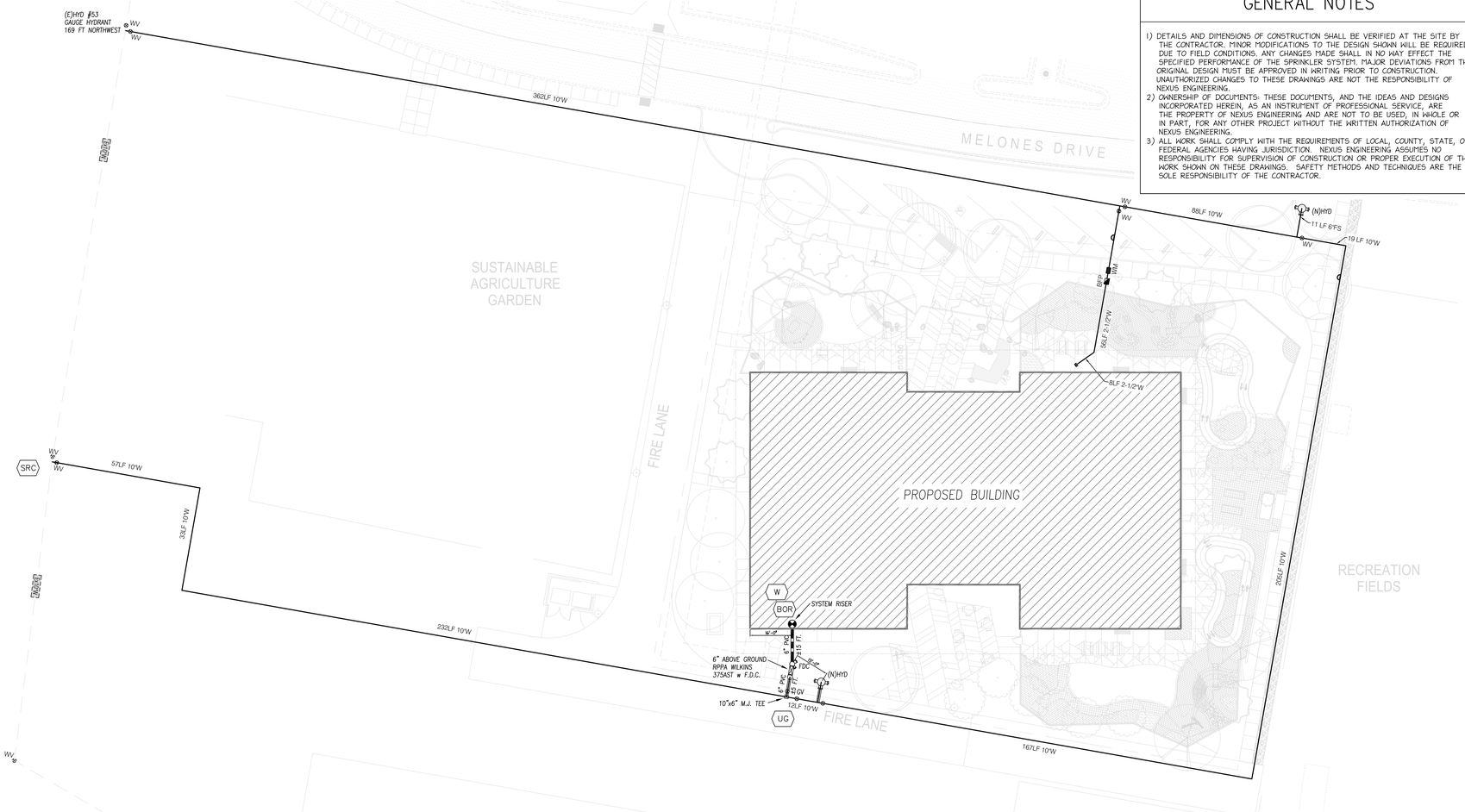

GENERAL NOTES

1) DETAILS AND DIMENSIONS OF CONSTRUCTION SHALL BE VERIFIED AT THE SITE BY THE CONTRACTOR. MINOR MODIFICATIONS TO THE DESIGN SHOWN WILL BE REQUIRED DUE TO FIELD CONDITIONS. ANY CHANGES MADE SHALL IN NO WAY EFFECT THE SPECIFIED PERFORMANCE OF THE SPRINKLER SYSTEM. MAJOR DEVIATIONS FROM THE ORIGINAL DESIGN MUST BE APPROVED IN WRITING PRIOR TO CONSTRUCTION. UNAUTHORIZED CHANGES TO THESE DRAWINGS ARE NOT THE RESPONSIBILITY OF NEXUS ENGINEERING.
2) OWNERSHIP OF DOCUMENTS: THESE DOCUMENTS, AND THE IDEAS AND DESIGNS INCORPORATED HEREIN, AS AN INSTRUMENT OF PROFESSIONAL SERVICE, ARE THE PROPERTY OF NEXUS ENGINEERING AND ARE NOT TO BE USED, IN WHOLE OR IN PART, FOR ANY OTHER PROJECT WITHOUT THE WRITTEN AUTHORIZATION OF NEXUS ENGINEERING.
3) ALL WORK SHALL COMPLY WITH THE REQUIREMENTS OF LOCAL, COUNTY, STATE, OR FEDERAL AGENCIES HAVING JURISDICTION. NEXUS ENGINEERING ASSUMES NO RESPONSIBILITY FOR SUPERVISION OF CONSTRUCTION OR PROPER EXECUTION OF THE WORK SHOWN ON THESE DRAWINGS. SAFETY METHODS AND TECHNIQUES ARE THE SOLE RESPONSIBILITY OF THE CONTRACTOR.

BUILDING CODE DATA

OCCUPANCY GROUP:	B, I-4
TYPE OF CONSTRUCTION:	VB
BUILDING SQ. FT.:	19,976 SQ.FT.

DESIGN CRITERIA

AUTHORITY HAVING JURISDICTION:	OSFM
STANDARD:	NFPA 13 (2016 EDITION) w CA AMMENDMENTS FOUND IN 2019 CFC , CHAPTER 80.
CONSTRUCTION TYPE:	OBSTRUCTED COMBUSTIBLE - ATTIC & EXPOSED FRAMING AREAS UN-OBSTRUCTED - BELOW CEILINGS
OCCUPANCY CLASSIFICATION:	DAY CARE, CLASSROOMS & OFFICES - LIGHT HAZARD MECHANICAL AREAS, KITCHEN - ORDINARY GROUP I STORAGE AREAS - ORDINARY GROUP II
SYSTEM TYPE:	WET
DENSITY/AREA OF APPLICATION:	LIGHT HAZARD = 0.10 / 1,500 SQ.FT. U.N.O. ORDINARY GROUP 1 = 0.15 / 1,500 SQ.FT. U.N.O. ORDINARY GROUP 2 = 0.20 / 1,500 SQ.FT. U.N.O.
SPRINKLER SPACING:	LIGHT HAZARD - SMOOTH CEILING = 225 SQ FT MAX. LIGHT HAZARD - FRAMING LESS THAN 36" O.C. = 130 SQ FT MAX. ORDINARY GROUP I & II = 130 SQ FT MAX.
HOSE ALLOWANCE:	LIGHT HAZARD = 100 GPM ORDINARY GROUP I & II = 250 GPM
SCOPE OF WORK:	INSTALL OVERHEAD FIRE SPRINKLER SYSTEM AND UNDERGROUND SUPPLY MAIN INCLUDING SYSTEM RISER.
FACILITY USAGE:	PRESCHOOL & DAY CARE. OFFICES & HIGHER EDUCATION.

OVERHEAD INSTALLATION NOTES

1) ALL MATERIALS, METHODS, DESIGN, AND INSTALLATION SHALL CONFORM TO THE REQUIREMENTS OF THE TURLOCK FIRE DEPARTMENT, OSFM & DSA.
2) THIS SYSTEM HAS BEEN HYDRAULICALLY CALCULATED PER THE DESIGN CRITERIA ABOVE; SEE PRINTED CALCULATION REPORT FOR DETAILS. A PLACARD INDICATING THE HYDRAULIC DESIGN CRITERIA WILL BE INSTALLED ON THE RISER.
3) ALL MATERIALS TO BE NEW, UL LISTED AND/OR NFPA APPROVED.
4) ALL OVERHEAD PIPING 6½" SHALL BE BLACK, SCHEDULE 10 BLACK. 3" MAINS TO BE BLACK SCH. 40. PIPE WITH SHOP WELDED OUTLETS INSTALLED BY CERTIFIED WELDERS.
5) ALL OVERHEAD PIPING 6½" & SMALLER SHALL BE SCHEDULE 40 BLACK PIPE. (WHERE SHOP WELDED OUTLETS EXIST THEY ARE INSTALLED BY CERTIFIED WELDERS).
6) (N) CROSS/FEED MAIN PIPE FITTINGS: DUCTILE IRON, GROOVED WITH STANDARD GASKETS.
7) (N) BRANCHLINE FITTINGS: DUCTILE IRON, CAST IRON, 125#, THREADED.
8) ALL PIPING SHALL BE HYDROSTATICALLY TESTED PER NFPA 13, SEC. 25.2.1; 24 HOUR NOTIFICATION REQUIRED.
9) A SPARE SPRINKLERS AND WRENCH(S) SHALL BE PROVIDED PER NFPA 13, SEC. 6.2.9.
10) PROTECTION AGAINST FREEZING OF ALL EXPOSED PIPING, SPRINKLERS, AND VALVES IS PER NFPA 13 8.16.4.1.
11) ALARM BELL SHALL BE PROVIDED BY FIRE SPRINKLER CONTRACTOR, INSTALLATION & WIRING BY ELECTRICAL / FIRE ALARM CONTRACTOR.
12) THE SYSTEM ALARMS SHALL BE PROVIDED WITH 24-HOUR MONITORING PER 2016 CFC, SECTION 903.4.
13) 18" CLEARANCE ABOVE STORAGE IS REQUIRED PER NFPA 13.
14) FOREMAN TO SCHEDULE WELD INSPECTION WHERE REQUIRED.

UNDERGROUND INSTALLATION NOTES

1) ALL MATERIALS AND METHODS SHALL CONFORM TO THE REQUIREMENTS OF NFPA 24 CHAPTER 10 (2016) AS AMENDED BY THE 2019 CFC & CSFM.
2) ALL INSTALLATION TO BE PER NFPA 24 10.9 (2016) AS AMENDED BY THE 2019 CFC & CSFM.
3) ALL MATERIALS TO BE NEW, UL LISTED AND/OR NFPA APPROVED.
4) THRUST BLOCKING SHALL BE PLACED AND FORMED PER NFPA 24 SECTION 10.6.1. OR A RESTRAINED JOINT SYSTEM UTILIZING MECHANICAL JOINTS WITH SET SCREW RETAINER GLANDS, PER SECTION 10.6.2.
5) U/G PIPING TO BE PVC, C-900, CLASS 235, DR18 OR DUCTILE IRON CLASS 52.
6) ALL UNDERGROUND PIPE IN VERTICAL POSITION TO BE DUCTILE IRON.
7) U/G FITTINGS TO BE DUCTILE IRON, CLASS 350 W/MECHANICAL JOINTS.
8) PIPING SHALL HAVE A MINIMUM BURY OF 36 INCHES BELOW GRADE.
9) U/G PIPE TO BE FLUSHED PER NFPA 24, SEC. 10.10.2.1.
10) U/G PIPING TO BE HYDROSTATICALLY TESTED AT 200 PSI FOR TWO HOURS PER NFPA 24, SEC. 10.10.2.2. PIPE TO BE CENTER LOADED FOR TESTING.
11) VERIFY LOCATION OF ALL EXISTING UTILITIES BEFORE PROCEEDING WITH INSTALLATION.
12) WATER FLOW INFORMATION: 60 STATIC, 42 RESIDUAL WITH 949 GPM FLOWING

1 FP1.0 UNDERGROUND & SITE PLAN

SCALE: 1"=20'-0"

20' 10' 0' 20' 40'

10.0°TO TRUE NORTH

N

* SYMBOLS *

- AUTOMATIC SPRINKLER RISER
- EARTHQUAKE BRACING
- 2-WAY & 4-WAY SEISMIC BRACING
- 2-WAY BRANCHLINE RESTRAINT
- SPRINKLER WITH HEAD GUARD
- PIPE HANGER
- HYDRAULIC REF PT
- FLEX GRV COUPLING
- RIGID GRV COUPLING
- THREADED CAP
- THREADED PLUG
- ELEVATION BELOW DECK
- CHANGE IN PIPE ELEVATION
- INSPECTORS TEST
- AUX DRAIN
- REVISION NOTATION
- LOCAL ALARM
- GROOVE CAP

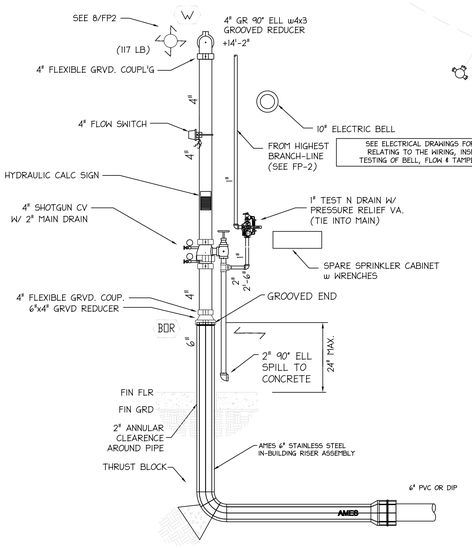

2 FP1.0 SYSTEM RISER DETAIL

SCALE: N.T.S.

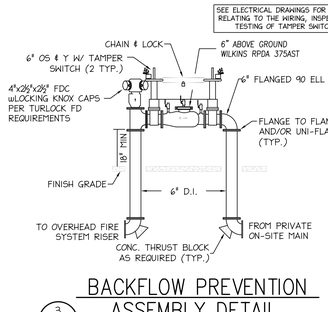

3 FP1.0 BACKFLOW PREVENTION ASSEMBLY DETAIL

SCALE: N.T.S.

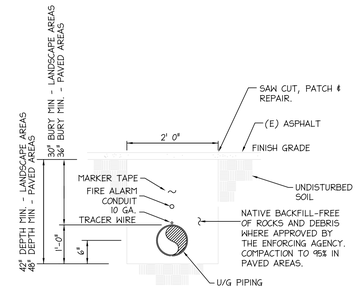

NOTES: BACKFILL SHALL BE WELL TAMPED IN LAYERS OR IN PUDDLES UNDER AND AROUND PIPES TO PREVENT SETTLEMENT OR LATERAL MOVEMENT. BACKFILL SHALL CONSIST OF CLEAN FILL SAND OR PEA GRAVEL TO A MINIMUM 6" BELOW AND TO A MINIMUM OF 12" ABOVE THE PIPE AND SHALL CONTAIN NO ASHES,CINDERS, REFUSE, ORGANIC MATTER, OR OTHER CORROSIVE MATERIALS. ROCKS SHALL NOT BE USED FOR BACKFILL. 10.9 NFPA 24 2016 2019 CFC

4 FP1.0 TRENCH DETAIL

SCALE: N.T.S.

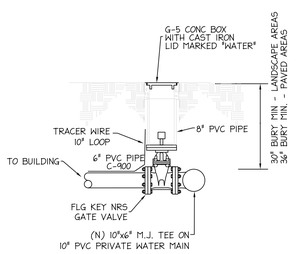

5 FP1.0 TAPPING SLEEVE & GATE VALVE DETAIL

SCALE: N.T.S.

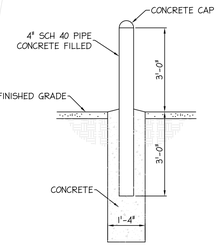

6 FP1.0 PIPE BOLLARD DETAIL

SCALE: N.T.S.

THRUST BLOCK DESCRIPTION	THRUST BLOCK DESCRIPTION			
	HORIZONTAL BEND			
	PIPE SIZE	SURFACE AREA SQ. FT.	THICKNESS (INCHES)	THRUST FORCE
	22-1/2° BENDS			
HORIZONTAL BEND	4"	.8	12	1059
	6"	1.6	12	2188
	8"	2.8	12	3765
	10"	4.2	12	5644
	12"	6	14	8009
	45° BENDS			
HORIZONTAL TEE	4"	1.6	12	2077
	6"	3.2	12	4293
	8"	5.5	14	7385
	10"	8.3	18	11110
	12"	11.8	18	15711
	90° BENDS and HYDRANT BURYS			
VERTICAL BEND	4"	2.9	12	3839
	6"	5.9	12	7932
	8"	10.2	15	13646
	10"	15.4	18	20528
	12"	21.8	18	29030
	TEES and DEADENDS			
	4"	2	12	2714
	6"	4.2	12	5609
	8"	7.2	15	9649
	10"	10.9	18	14515
	12"	15.4	18	20527
HYDRANT BURY	USE 144 LBS PER CUBIC FT FOR GRAVITY BLOCKS			

NOTES:
1. ALL VALUES SHOWN ARE MINIMUM FOR A DESIGN PRESSURE OF 150 PSI AND A SOIL RESISTANCE OF 2000 LBS/SQ FT WITH THRUSTBLOCK MINIMUM OF 2 FT OF COVER AND VELOCITY OF 10 FPS.
2. ALL THRUST BLOCKS SHALL BE MADE OF CLASS "B" CONCRETE WITH A MINIMUM CRUSHING STRENGTH OF 2000 PSI @ 28 DAYS.
3. ALL BLOCKS TO BE POURED AGAINST UNDISTURBED SOIL. THE BLOCKS SHALL BE PLACED SO THAT JOINTS AND FITTINGS WILL BE ACCESSIBLE FOR REPAIRS.
4. FOR VERTICAL BENDS, ALL METALLIC TIE-DOWNS SHALL BE INCASED WITH POLYETHLENE WRAP (8 MIL MIN) AS SPECIFIED IN AWWA C105.
5. ALL THRUST BLOCKS SHOULD HAVE A MINIMUM BLOCK WIDTH OF 1 TO 2 TIMES THE BLOCK HEIGHT. THE BLOCK HEIGHT SHOULD NOT BE LESS THAN THE OUTSIDE DIAMETER OF THE PIPE.

7 FP1.0 THRUST BLOCK SCHEDULE

Division of the State Architect

APPROVED
DIV. OF THE STATE ARCHITECT
APP: 02-119316 INC:
REVIEWED FOR
SS☐ FLS☐ ACS☑
DATE: 03/24/2022

Office of the State Fire Marshal

OFFICE OF THE STATE FIRE MARSHAL APPROVED FIRE AND PANIC ONLY

03/14/22
21-0498

Approval of this plan does not authorize or approve any omission or deviation from applicable requirements. Final approval is subject to field inspection. One set of approved plans shall be available on the project site at all times.

CSUS CHILD DEVELOPMENT CENTER

CALIFORNIA STATE UNIVERSITY, STANISLAUS
ONE UNIVERSITY CIRCLE
TURLOCK, CA 95382

ehdd.

PIER 1, BAY 2
THE EMBARCADERO
SAN FRANCISCO, CA 94111

INFO@EHDD.COM
+1 415-285-9193

Consultant

nexus engineering
Consulting Mechanical Engineers
1400 Lone Palm Ave, Suite A
Modesto, CA 95351
Tel: 209.572.7399 Fax: 209.236.1579
www.nexusengineering.net
HVAC . Plumbing/Piping . Fire Sprinklers
Process/Plant Engineering . Refrigeration

Stamp

REGISTERED PROFESSIONAL ENGINEER LEN LAMANCUSA No. M 21 MECHANICAL STATE OF CALIFORNIA

Printing	Date
95% CONSTRUCTION DOCUMENTS	06.25.2021
PERMIT SET	08.16.2021
PERMIT SET - DSA V2.5	12.15.2021
PERMIT SET - SFM	12.21.2021

Revisions and Description	Date

Scale
AS SHOWN

Drawn by
SH

EHDD Job Number
20020

Sheet Title
FIRE PROTECTION UNDERGROUND & SITE PLAN

Sheet Number
FP1.0 V3

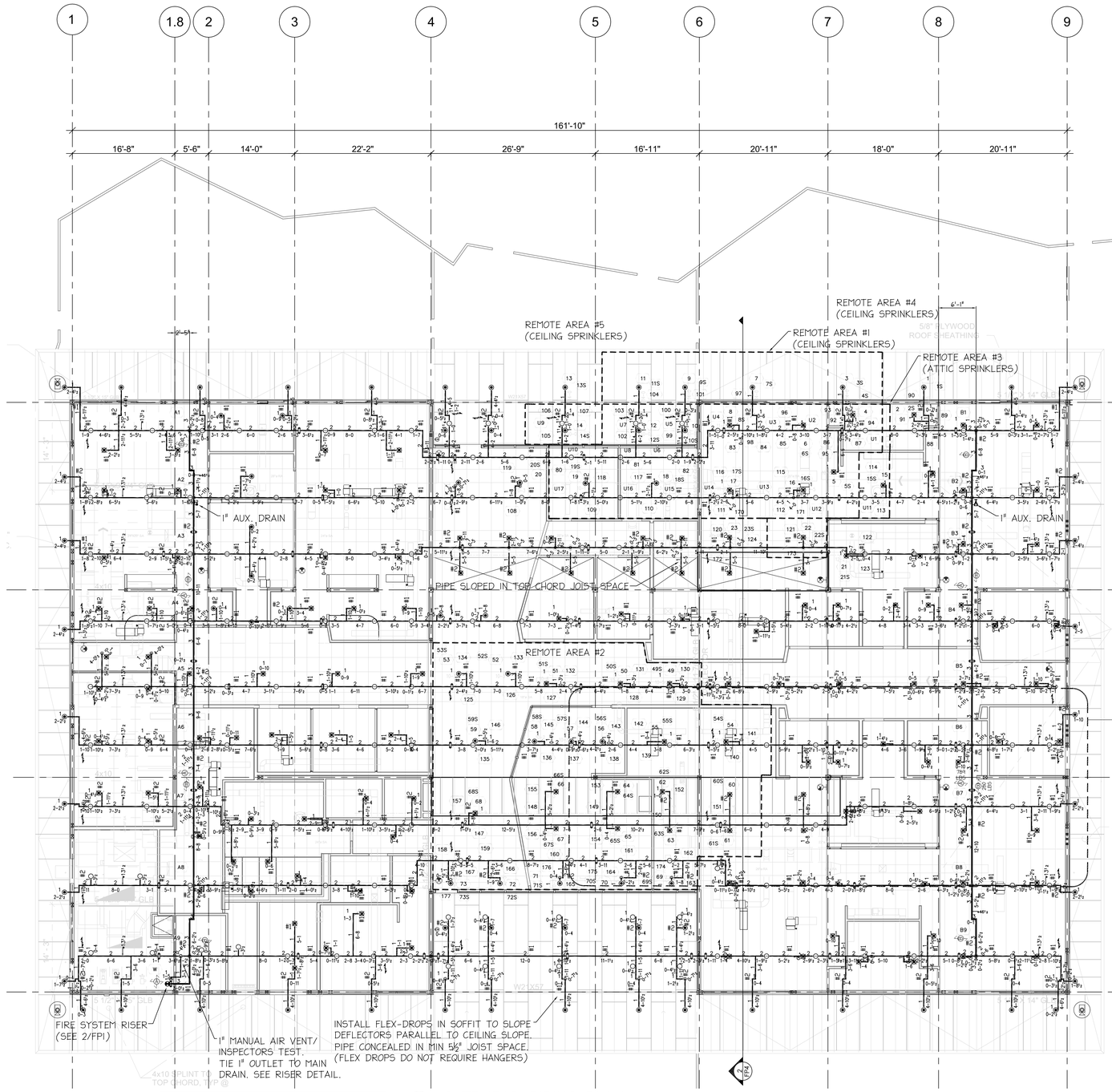

REMOTE AREA INFORMATION

FILENAME: 2025IFS
LOCATION: REMOTE AREA #3 ATTIC SPRINKLERS
OF HEADS: 17
DENSITY: 0.10 GPM/SQ. FT.
REMOTE AREA: 1055 SQ. FT.
GPM REQUIRED AT BOR: 270 GPM
PSI REQUIRED AT BOR: 23.3 PSI

ATTIC UPRIGHT SPRINKLERS CALCULATED. REMOTE AREA REDUCED BY UP TO 40% WITH QR SPRINKLERS, BASED ON 8'-4" MAX CONCEALED SPACE CEILING HEIGHT, MEASURED FROM 7'-2" CEILING TO BOTTOM OF ROOF DECK AT 15'-6" PER FIGURE 11.2.3.2.3.1.
15'-6"-7'-2"=8'-4". 8'-4"x-3/2+55=42.5% REDUCTION

* SYMBOLS *

- AUTOMATIC SPRINKLER RISER
- EARTHQUAKE BRACING
- 2-WAY & 4-WAY SEISMIC BRACING
- 2-WAY BRANCHLINE RESTRAINT
- SPRINKLER WITH HEAD GUARD
- PIPE HANGER
- HYDRAULIC REF PT
- FC FLEX GRV COUPLING
- RIGID GRV COUPLING
- THREADED CAP
- THREADED PLUG
- ELEVATION BELOW DECK
- CHANGE IN PIPE ELEVATION
- INSPECTORS TEST
- AUX DRAIN
- REVISION NOTATION
- LOCAL ALARM
- GROOVE CAP

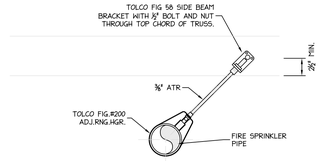

ADDITIONAL HANGER INSTALLED AT 45° FROM VERTICAL WITHIN 24" OF A BRANCH-LINE HANGER WITH A TOLCO FIG. 25 TO RESIST LATERAL MOVEMENT.

5 FP2 BRANCHLINE RESTRAINT DETAIL
SCALE: N.T.S.

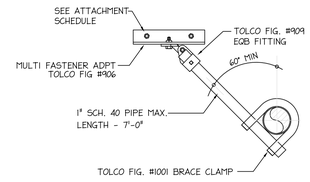

6 FP2 LATERAL BRACING
SCALE: N.T.S.

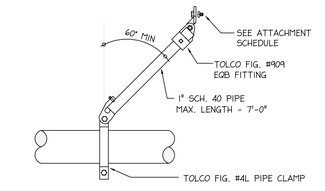

7 FP2 LONGITUDINAL BRACING
SCALE: N.T.S.

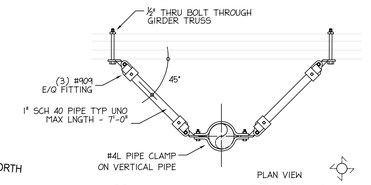

8 FP2 4-WAY BRACING
SCALE: N.T.S.

ANY SPRINKLERS NOT UTILIZING A FLEX-DROP ASSEMBLY AND PIPED WITH STANDARD THREADED PIPE MUST HAVE AN OVERSIZED ESCUTCHEON INSTALLED TO COVER A 1" ANULAR CLEARANCE OPENING IN THE CEILING.

1 FP2 OVERHEAD PIPING PLAN
SCALE: 1/8"=1'-0"

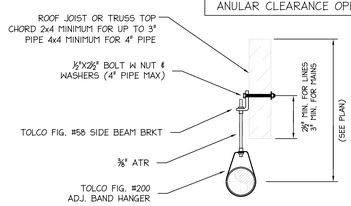

*NOTE: 1. IF HANGER IS TO BE USED AT THE END OF A BRANCHLINE, A TOLCO FIGURE #25 SURGE RESTRAINER IS TO BE INSTALLED.

2 FP2 HANGER DETAIL #1
SCALE: N.T.S.

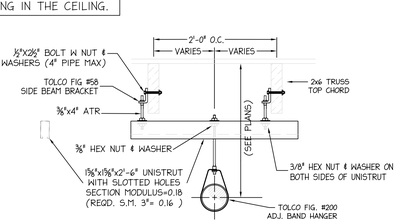

*NOTE: 1. IF HANGER IS TO BE USED AT THE END OF A BRANCHLINE, A TOLCO FIGURE #25 SURGE RESTRAINER IS TO BE INSTALLED.

3 FP2 HANGER DETAIL #2
SCALE: N.T.S.

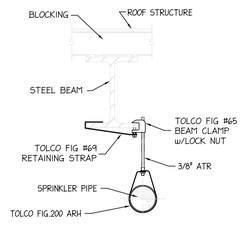

*NOTE: 1. HANGER ORIENTATION CAN BE FROM TOP OR BOTTOM OF BEAM
2. IF HANGER IS TO BE USED AT THE END OF A BRANCHLINE, A TOLCO FIGURE #25 SURGE RESTRAINER IS TO BE INSTALLED.

4 FP2 HANGER DETAIL #3
SCALE: N.T.S.

SYM	CNT	POSITION	FINISH	TEMP	K	NPT	SIN	MFG.	MODEL#
◉	79	SEMI RECS PEND	BLACK	155	5.60	1/2"	TY323	TYCO	TY-FRB
○	188	UPRIGHT DNLINE	BRASS	200	5.60	1/2"	TY3231	TYCO	TY-FRB
⊗	143	CONCEALED PEND	WHITE	155	5.60	1/2"	TY3531	TYCO	RFII QR

CONCEALED PEND IN AREA MARKED PT-2 REQUIRE CUSTOM COLOR FROM FACTORY

SPRINKLER LEGEND

REMOTE AREA INFORMATION

FILENAME: 2025IFS
LOCATION: REMOTE AREA #1 CEILING SPRINKLERS
OF HEADS: 15
DENSITY: 0.10 GPM/SQ. FT.
REMOTE AREA: 1359 SQ. FT.
GPM REQUIRED AT BOR: 313 GPM
PSI REQUIRED AT BOR: 34.9 PSI

REMOTE AREA INCREASED BY 30% DUE TO SLOPE. REDUCED 32.8% WITH QR SPRINKLERS BASED ON 14'-9 MAX CEILING HEIGHT PER FIGURE 11.2.3.2.3.1.
14'-9"x-3/2+55=32.86% REDUCTION. AREA MANUALLY PEAKED. SEE REMOTE AREA 4 AND 5 IN CALCULATIONS PACKAGE. CEILING SPRINKLERS CALCULATED. SEE REMOTE AREA 3 FOR ATTIC SPRINKLERS CALCULATION.

REMOTE AREA INFORMATION

FILENAME: 2025IFS
LOCATION: REMOTE AREA #2 CEILING SPRINKLERS
OF HEADS: 25
DENSITY: 0.10 GPM/SQ. FT.
REMOTE AREA: 1950 SQ. FT.
GPM REQUIRED AT BOR: 430 GPM
PSI REQUIRED AT BOR: 29.9 PSI

REMOTE AREA INCREASED BY 30% DUE TO CEILING SLOPE. SPRINKLERS IN KITCHEN FLOW AT 0.15 DENSITY FOR ORDINARY HAZARD GROUP-1 MAXIMUM STORAGE HEIGHT IS 8'-0"

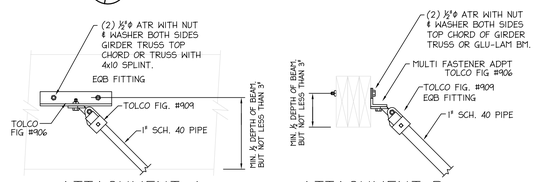

EQB ATTACHMENT SCHEDULE				
TYPE	HARDWARE	SIZE	LENGTH	STRUCTURE
A	THRU-BOLT OR ATR	(2)1/2"	VARIES	GIRDER TRUSS OR 4x10
B	THRU-BOLT OR ATR	1/2"	VARIES	GIRDER TRUSS OR GLB

#SEE PROJECT DATA FOR SEISMIC CALCULATION RESULTS#

9 FP2 EQB ATTACHMENT SCHEDULE
SCALE: N.T.S.

Division of the State Architect

APPROVED
DIV. OF THE STATE ARCHITECT
APP: 02-119316 INC:
REVIEWED FOR
SS☐ FLS☐ ACS☑
DATE: 03/24/2022

Office of the State Fire Marshal

OFFICE OF THE STATE FIRE MARSHAL
APPROVED FIRE AND PANIC ONLY
03/14/22
21-0498
Approval of this plan does not authorize or approve any omission or deviation from applicable regulations. Final approval is subject to field inspection. One set of approved plans shall be available on the project site at all times.

CSUS CHILD DEVELOPMENT CENTER

CALIFORNIA STATE
UNIVERSITY, STANISLAUS
ONE UNIVERSITY CIRCLE
TURLOCK, CA 95382

ehdd.

PIER 1, BAY 2
THE EMBARCADERO
SAN FRANCISCO, CA 94111

INFO@EHDD.COM
+1 415-285-9193

Consultant

neXus engineering

Consulting Mechanical Engineers
1400 Lone Palm Ave, Suite A
Modesto, CA 95351
Tel: 209.572.7399 Fax: 209.236.1579
www.nexusengineering.net
HVAC , Plumbing/Piping , Fire Sprinklers
Process/Plant Engineering , Refrigeration

Stamp

REGISTERED PROFESSIONAL ENGINEER
STEVEN J. HAMMOND
No. M 31,241
MECHANICAL
STATE OF CALIFORNIA

Printing	Date
95% CONSTRUCTION DOCUMENTS	06.25.2021
PERMIT SET	08.16.2021
PERMIT SET - DSA V2.5	12.15.2021
PERMIT SET - SFM	12.21.2021

Revisions and Description	Date

Scale
AS SHOWN

Drawn by
SH

EHDD Job Number
20020

Sheet Title
FIRE PROTECTION OVERHEAD PIPING PLAN

Sheet Number
FP2.0 V3

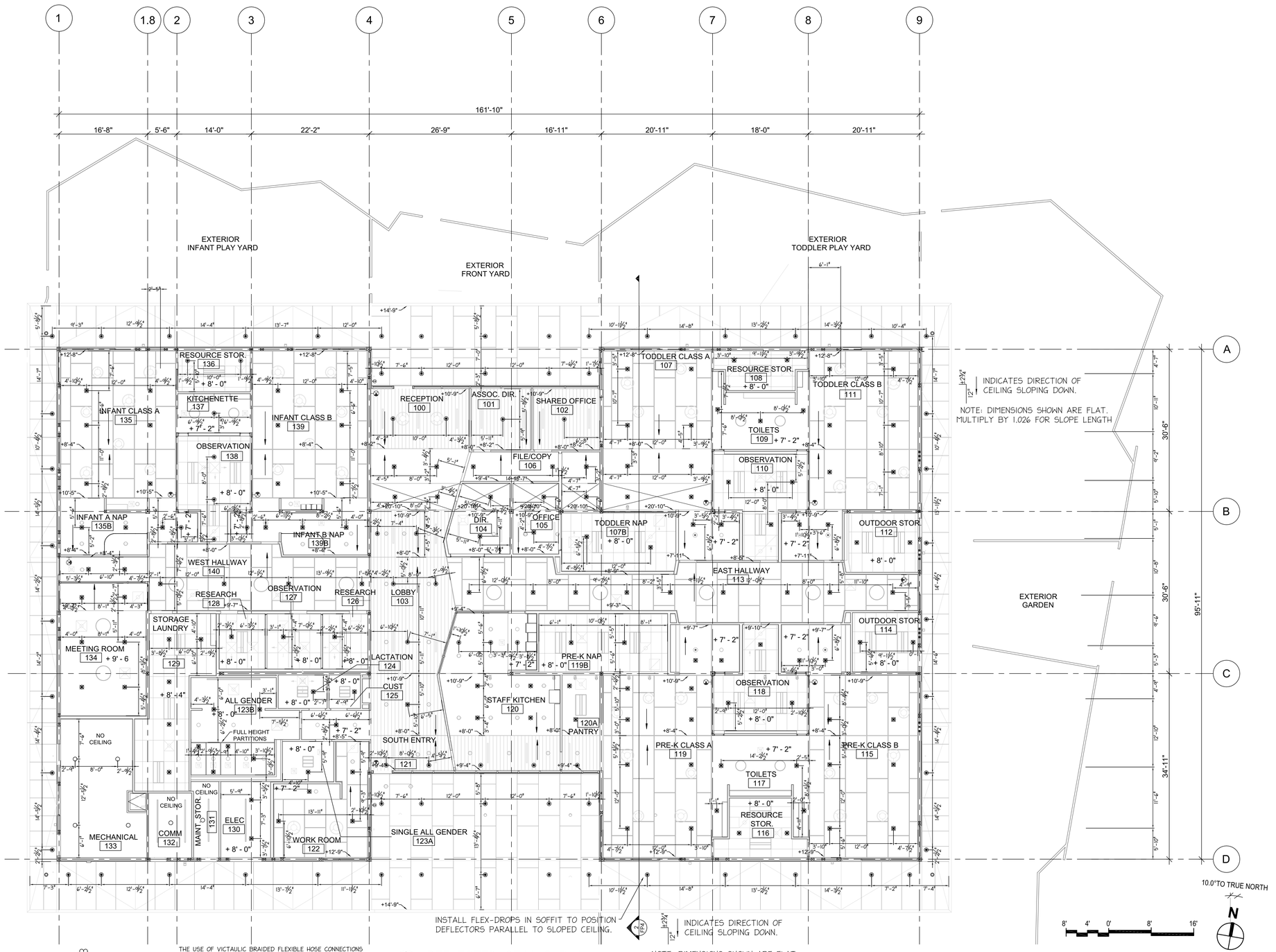

1 FP3 REFLECTED CEILING PLAN

SCALE: 1/8"=1'-0"

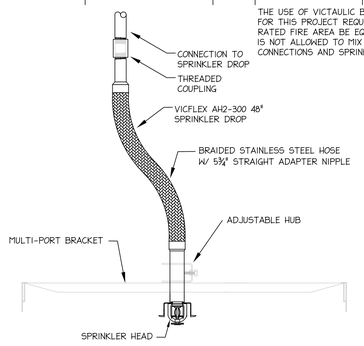

2 FP3 VICTAULIC VIC FLEX DETAIL #1

SCALE: N.T.S.

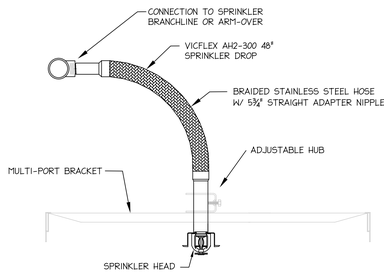

3 FP3 VICTAULIC VIC FLEX DETAIL #2

SCALE: N.T.S.

THE USE OF VICTAULIC BRAIDED FLEXIBLE HOSE CONNECTIONS FOR THIS PROJECT REQUIRES THAT ALL SPRINKLERS WITHIN A RATED FIRE AREA BE EQUIPPED WITH THE FLEXIBLE HOSES. IT IS NOT ALLOWED TO MIX SPRINKLERS WITH THE FLEXIBLE CONNECTIONS AND SPRINKLERS THAT ARE STANDARD PIPED.

ANY SPRINKLERS NOT UTILIZING A FLEX-DROP ASSEMBLY AND PIPED WITH STANDARD THREADED PIPE MUST HAVE AN OVERSIZED ESCUTCHEON INSTALLED TO COVER A 2" CLEARANCE OPENING IN THE CEILING.

INSTALL FLEX-DROPS IN SOFFIT TO POSITION DEFLECTORS PARALLEL TO CEILING SLOPE. PIPE CONCEALED IN MIN 5½" JOIST SPACE. (FLEX DROPS DO NOT REQUIRE HANGERS)

THE FLEX DROP MOUNTING BRACKET AND HUB PREVENTS UPWARD MOVEMENT OF THE SPRINKLER WHILE ALSO ALLOWING DIFFERENTIAL MOVEMENT OF THE CEILING FROM THE SPRINKLER SYSTEM PIPING.

SYM	CNT	POSITION	FINISH	TEMP	K	NPT	SIN	MFG.	MODEL#
◉	79	SEMI RECS PEND	BLACK	155	5.60	1/2"	TY323	TYCO	TY-FRB
○	188	UPRIGHT ONLINE	BRASS	200	5.60	1/2"	TY3231	TYCO	TY-FRB
◉	143	CONCEALED PEND	WHITE	155	5.60	1/2"	TY3531	TYCO	RFII QR

CONCEALED PEND IN AREA MARKED PT-2 REQUIRE CUSTOM COLOR FROM FACTORY

SPRINKLER LEGEND

Division of the State Architect

APPROVED
DIV. OF THE STATE ARCHITECT
APP: 02-119316 INC:
REVIEWED FOR
SS☐ FLS☐ ACS☑
DATE: 03/24/2022

Office of the State Fire Marshal

OFFICE OF THE STATE FIRE MARSHAL APPROVED FIRE AND PANIC ONLY

03/14/22
21-0498

Approval of this plan does not authorize or approve any omission or deviation from applicable regulations. Final approval is subject to field inspection. One set of approved plans shall be available on the project site at all times.

CSUS CHILD DEVELOPMENT CENTER

CALIFORNIA STATE UNIVERSITY, STANISLAUS
ONE UNIVERSITY CIRCLE
TURLOCK, CA 95382

ehdd.

PIER 1, BAY 2
THE EMBARCADERO
SAN FRANCISCO, CA 94111

INFO@EHDD.COM
+1 415-285-9193

Consultant

nexus engineering

Consulting Mechanical Engineers
1400 Lone Palm Ave, Suite A
Modesto, CA 95351
Tel: 209.572.7399 Fax: 209.236.1579
www.nexusengineering.net
HVAC , Plumbing/Piping , Fire Sprinklers
Process/Plant Engineering , Refrigeration

Stamp

REGISTERED PROFESSIONAL ENGINEER MECHANICAL STATE OF CALIFORNIA

Printing	Date
95% CONSTRUCTION DOCUMENTS	06.25.2021
PERMIT SET	08.16.2021
PERMIT SET - DSA V2.5	12.15.2021
PERMIT SET - SFM	12.21.2021

Revisions and Description	Date

Scale
AS SHOWN

Drawn by
SH

EHDD Job Number
20020

Sheet Title
FIRE PROTECTION REFLECTED CEILING PLAN

Sheet Number
FP3.0 V3

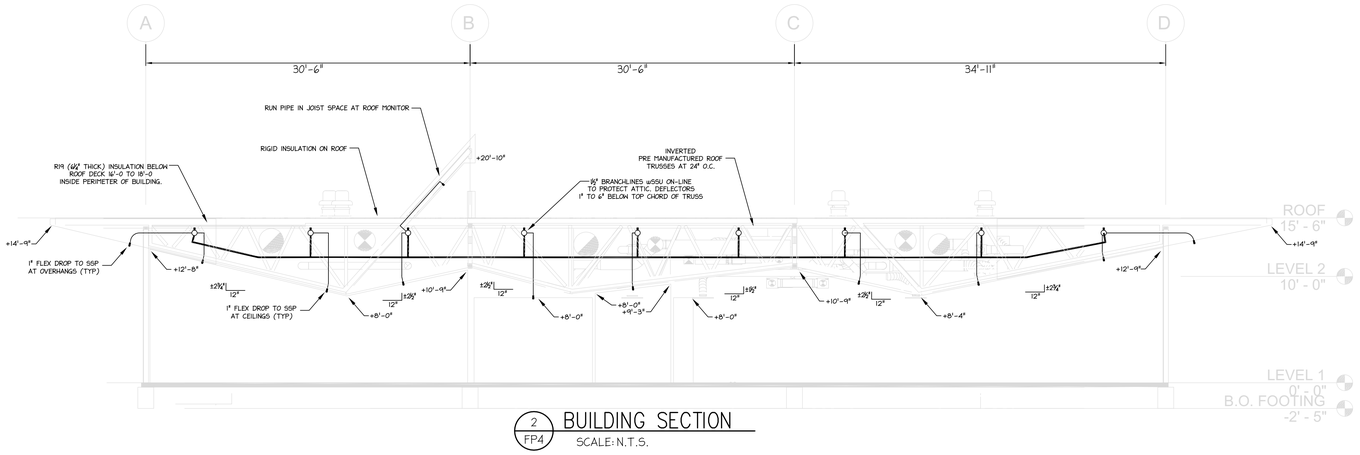

2 FP4 BUILDING SECTION

SCALE: N.T.S.

Division of the State Architect

APPROVED
DIV. OF THE STATE ARCHITECT
APP: 02-119316 INC:
REVIEWED FOR
SS☐ FLS☐ ACS☑
DATE: 03/24/2022

Office of the State Fire Marshal

OFFICE OF THE STATE FIRE MARSHAL
APPROVED FIRE AND PANIC ONLY

03/14/22
21-0498

Approval of this plan does not authorize or approve any omission or deviation from applicable regulations. Final approval is subject to field inspection. One set of approved plans shall be available on the project site at all times.

CSUS CHILD DEVELOPMENT CENTER

CALIFORNIA STATE
UNIVERSITY, STANISLAUS
ONE UNIVERSITY CIRCLE
TURLOCK, CA 95382

PIER 1, BAY 2
THE EMBARCADERO
SAN FRANCISCO, CA 94111

INFO@EHDD.COM
+1 415-285-9193

Consultant

Consulting Mechanical Engineers
1400 Lone Palm Ave, Suite A
Modesto, CA 95351
Tel: 209.572.7399 Fax: 209.236.1579
www.nexusengineering.net
HVAC , Plumbing/Piping . Fire Sprinklers
Process/Plant Engineering . Refrigeration

Stamp

REGISTERED PROFESSIONAL ENGINEER
MECHANICAL
STATE OF CALIFORNIA

Printing	Date
95% CONSTRUCTION DOCUMENTS	06.25.2021
PERMIT SET	08.16.2021
PERMIT SET - DSA V2.5	12.15.2021
PERMIT SET - SFM	12.21.2021

Revisions and Description	Date

Scale
AS SHOWN

Drawn by
SH

EHDD Job Number
20020

Sheet Title
FIRE PROTECTION BLDG SECTION

Sheet Number
FP4.0 V3

8/6/2021 5:44:22 PM

LIGHTING LEGEND

SEE FIXTURE SCHEDULE FOR EXACT CALL OUT & DESCRIPTION

- LED LIGHT FIXTURE– SURFACE OR WALL MOUNTED
- LED LIGHT FIXTURE– RECESSED MOUNTED
- LED DIRECT/INDIRECT LIGHT FIXTURE– RECESSED MOUNTED
- LED DOWNLIGHT FIXTURE– RECESSED MOUNTED
- LED LIGHT FIXTURE– SURFACE OR PENDANT MOUNTED
- LED LIGHT FIXTURE– WALL MOUNTED
- LED EXIT SIGN WITH BATTERY BACKUP– ARROWS SHOW DIRECTION OF EGRESS
- LIGHT FIXTURE TAG, LETTER INDICATES TYPE. SEE FIXTURE SCHEDULE.
- S SINGLE POLE TOGGLE SWITCH, +48" A.F.F. TO TOP OF BOX.
- $^{PW}_{100}$ PASSIVE INFRARED OCCUPANCY SENSOR WALL SWITCH, ON/OFF, WATTSTOPPER #PW–100
- $^{PW}_{311}$ PASSIVE INFRARED OCCUPANCY SENSOR WALL SWITCH, 0–10V DIMMING. PROGRAM BUTTONS FOR RAISE AND LOWER FUNCTION. WATTSTOPPER #PW–311
- $^{DW}_{100}$ DUAL TECHNOLOGY OCCUPANCY SENSOR WALL SWITCH, ON/OFF, WATTSTOPPER #DW–100
- $^{DW}_{311}$ DUAL TECHNOLOGY OCCUPANCY SENSOR WALL SWITCH, 0–10V DIMMING. PROGRAM BUTTONS FOR RAISE AND LOWER FUNCTION. WATTSTOPPER #DW–311
- DIMMER SWITCH, 0–10V DIMMING, LUTRON #DVSTV–X
- $^{DM}_{10X}$ DIGITAL DIMMER SWITCH, WATTSTOPPER #LMDM–10X, X =DENOTES # OF BUTTONS.
- DIGITAL DUAL TECHNOLOGY CEILING MOUNTED OCCUPANCY SENSOR, WATTSTOPPER #LMDC–100.
- DIGITAL DUAL TECHNOLOGY CORNER MOUNT OCCUPANCY SENSOR, WATTSTOPPER #LMDXC–100.
- 21x DIGITAL ROOM CONTROLLER, 0–10V DIMMING, x–RELAY, WATTSTOPPER #LMRC–21x
- 101 DIGITAL PLUG LOAD CONTROLLER, WATTSTOPPER #LMPL–101
- 22x DIGITAL ROOM CONTROLLER, UNV. DIMMING, x–RELAY, WATTSTOPPER #LMRC–22x
- DIGITAL PIR CEILING MOUNTED OCCUPANCY SENSOR, WATTSTOPPER #LMPC–100–1.
- LMZC DIGITAL ZONE CONTROLLER, SCHEDULER, & NETWORK INTERFACE, WATTSTOPPER #LMZC–301
- 100 400 DIGITAL SINGLE ZONE PHOTOSENSOR, WATTSTOPPER #LMLS–400
- UL924 EMERGENCY RELAY WATTSTOPPER #ELCU–200

GENERAL ELECTRICAL LEGEND

- CONCRETE PULL BOX –SIZE AS NOTED – LIDS AS NOTED 'P' POWER, 'S' SIGNAL, 'F' FIRE ALARM & 'D' DATA; '–T' DENOTES TRAFFIC LID
- CONDUIT –SURFACE MOUNTED OR ABOVE CEILING –EMT WITH COMPRESSION FITTING UNLESS NOTED ON PLANS
- CONDUIT –CONCEALED BELOW FLOOR IN EMT OR UNDERGROUND IN PVC SCH 40 WITH IMC ELBOWS
- HOMERUN TO PERSPECTIVE PANEL OR CABINET –BRANCH CIRCUIT WITH OUT FURTHER DESIGNATION IS A #12 WIRE CIRCUIT
- FLEX
- TERMINAL CABINET
- PANEL BOARD –SEE SCHEDULE
- MOTOR/EXHAUST FAN –N.I.E.S. –CONNECT AS REQUIRED
- DUPLEX RECEPTACLE +15" A.F.F. FROM BOTTOM OF BOX U.O.N.
- QUADPLEX RECEPTACLE +15" A.F.F. FROM BOTTOM OF BOX U.O.N.
- HALF SWITCHED DUPLEX RECEPTACLE +15" A.F.F. FROM BOTTOM OF BOX U.O.N.
- HALF SWITCHED QUADPLEX RECEPTACLE +15" A.F.F. FROM BOTTOM OF BOX U.O.N.
- FLOOR POWER RECEPTACLE –WALKER OR EQUAL
- 50A. –4 WIRE GROUND RECEPTACLE +15" A.F.F. FROM BOTTOM OF BOX U.O.N.
- GFCI DUPLEX RECEPTACLE +15" A.F.F. FROM BOTTOM OF BOX U.O.N.
- GFCI QUADPLEX RECEPTACLE +15" A.F.F. FROM BOTTOM OF BOX U.O.N.
- $_{HP}$ MOTOR RATED DISCONNECT SWITCH
- 30 FUSED DISCONNECT SWITCH –SIZE AS NOTED –30A. SHOWN
- R PLUG LOAD ROOM CONTROLLER. WATTSTOPPER #LMPL–101 OR EQUAL

GROUND – XX – NEUTRAL
WIRE SIZE – CKT. WIRE

FIRE ALARM LEGEND

* SEE FIRE ALARM EQUIPMENT SCHEDULE ON SHEET E4.2 FOR EXACT EQUIPMENT DESCRIPTION.

ELECTRICAL COMPLIANCE NOTES

THE INTENT OF THE DRAWINGS AND SPECIFICATION IS TO CONSTRUCT THE PROPOSED BUILDING IN ACCORDANCE WITH TITLE 24, CALIFORNIA CODE OF REGULATIONS. ALL WORK SHALL BE IN ACCORDANCE WITH THE REQUIREMENTS OF TITLE 22, DIVISION 7, CHAPTER 7, CALIFORNIA CODE OF REGULATIONS AND TITLE 24 –– ALL APPLICABLE PARTS OF LATEST EFFECTIVE EDITIONS.

ALL WORK PERFORMED UNDER THIS CONTRACT SHALL CONFORM TO THE FOLLOWING CODES AND REGULATIONS AS APPLICABLE:

2019 CALIFORNIA ADMINISTRATIVE CODE (CAC)
PART 1, TITLE 24, CALIFORNIA CODE OF REGULATIONS (CCR)
2019 CALIFORNIA BUILDING CODE (CBC)
PART 2, TITLE 24, CCR
BASED ON THE 2018 INTERNATIONAL BUILDING CODE (IBC)
2019 CALIFORNIA ELECTRICAL CODE (CEC)
PART 3, TITLE 24, CCR
BASED ON THE 2017 NATIONAL ELECTRICAL CODE (NEC)
2019 CALIFORNIA MECHANICAL CODE (CMC)
PART 4, TITLE 24, CCR
BASED ON THE 2018 UNIFORM MECHANICAL CODE (UMC)
2019 CALIFORNIA PLUMBING CODE (CPC)
PART 5, TITLE 24, CCR
BASED ON THE 2018 UNIFORM PLUMBING CODE (UPC)
2019 CALIFORNIA FIRE CODE (CFC)
PART 9, TITLE 24, CCR
BASED ON THE 2018 INTERNATIONAL FIRE CODE (IFC)
2016 NFPA 72, NATIONAL FIRE ALARM & SIGNALING CODE
w/ CALIFORNIA AMENDMENTS.

UNLESS OTHERWISE STATED, IT IS INTENDED THAT THE ABOVE CODES AND REGULATIONS REFER TO THE LATEST EDITION OR REVISION IN EFFECT ON THE DATE OF THE CONTRACT. NOTHING ON THE DRAWING IS TO BE CONSTRUED AS REQUIRING OR PERMITTING WORK THAT IS CONTRARY TO THE ABOVE LISTED CODES AND REGULATIONS, OR OTHER LOCAL, STATE OR FEDERAL CODES OR REGULATIONS WHICH MAY BE APPLICABLE.

GENERAL ELECTRICAL NOTES

1. PROVIDE ALL LABOR, MATERIALS, TOOLS, PLANT EQUIPMENT, TRANSPORTATION AND ALL PERFORM ALL OPERATIONS NECESSARY FOR THE PROPER EXECUTION AND COMPLETION OF ALL ELECTRICAL WORK REQUIRED FOR THE COMPLETE AND OPERATING SYSTEMS AS OUTLINED WITHIN THE SCOPE OF WORK.
2. UNDERWRITERS LABORATORIES, INC., SHALL MEET THEIR REQUIREMENTS AND SHALL BEAR THEIR LABEL WHEREVER STANDARDS HAVE BEEN ESTABLISHED AND LABEL SERVICE IS REGULARLY FURNISHED BY THAT AGENCY.
3. THE SIZE AND LOCATIONS OF EQUIPMENT ARE SHOWN TO SCALE WHEREVER POSSIBLE, CONTRACTOR SHALL MAKE USE OF ALL DATA IN ALL CONTRACT DOCUMENTS AND VERIFY THIS INFORMATION AT THE SITE.
4. CONDUCTORS SHALL BE COPPER CONDUCTORS TYPE AS NOTED ON CONSTRUCTION DOCUMENTS.
5. DO NOT PENETRATE STRUCTURAL MEMBERS, INCLUDING BEAMS, COLUMNS, OR FOOTINGS, WITHOUT PRIOR WRITTEN CONSENT OF THE DISTRICT'S STRUCTURAL ENGINEER. SHOULD IT BECOME NECESSARY TO PENETRATE SUCH MEMBERS, NOTIFY THE DISTRICT IN WRITING WITHOUT DELAY, PRIOR TO PROCEEDING WITH CONSTRUCTION AROUND SUCH MEMBERS.
6. ALL ELECTRICAL WORK SHALL CONFORM WITH THE 2019 CALIF. ELECTRICAL CODE CALIFORNIA TITLE 17, 19 & 24 ALONG WITH N.F.P.A. STANDARDS AND THE STATE FIRE MARSHAL'S REQUIREMENTS.
7. ALL WORK TO BE IN ACCORDANCE WITH REQUIREMENTS OF STATE & GOVERNING LOCAL FIRE CODES AND BUILDING CODES.
8. WHERE EXISTING CONSTRUCTION IS CUT, DAMAGED, OR REMODELED, PATCH WITH MATERIALS TO MATCH IN KIND, QUALITY, AND PERFORMANCE.
9. WORK SHALL BE EXECUTED IN A CAREFUL AND ORDERLY MANNER WITH THE LEAST POSSIBLE DISTURBANCE TO PUBLIC AND TO OCCUPANTS OF EXISTING BUILDING.
10. CONTRACTOR SHALL ASSUME SOLE RESPONSIBILITY FOR SAFETY OF ALL PERSONS ON OR ABOUT THE CONSTRUCTION SITE, IN ACCORDANCE WITH APPLICABLE LAWS AND CODES. GUARD ALL HAZARDS IN ACCORDANCE WITH THE SAFETY PROVISIONS OF THE LATEST MANUAL OF ACCIDENT PREVENTION PUBLISHED BY THE ASSOCIATED GENERAL CONTRACTORS OF AMERICA.
11. CLEAN ALL EXPOSED SURFACES AND NEW EQUIPMENT AFTER COMPLETION.
12. CONTRACTOR TO COORDINATE WITH OWNERS VENDORS (SUCH AS, BUT NOT LIMITED TO: SECURITY, PHONES, DATA, CLOSED CIRCUIT T.V., ETC.) AND ALLOW ACCESS TO THE CONSTRUCTION SITE.
13. ALL CONDUIT SHALL BE TYPE EMT CONDUIT UNLESS OTHERWISE NOTED. TYPE MC CABLE SHALL NOT BE USED UNLESS SPECIFICALLY NOTED ON THE CONSTRUCTION DOCUMENTS.
14. OPERATED DEVICES SUCH AS, BUT NOT LIMITED TO, TELE/DATA OUTLETS, RECEPTACLE OUTLETS AND LIGHT SWITCHES INSTALLED IN AREAS NOT RESTRICTED TO AUTHORIZED MAINTENANCE PERSONAL SHALL BE MOUNTED AT A MINIMUM OF +15" AFF., AS MEASURED FROM THE BOTTOM OF THE DEVICE OUTLET BOX, AND MAXIMUM OF +48" AFF., AS MEASURED FROM THE TOP OF THE DEVICE OUTLET BOX. WHERE DEVICES ARE MOUNTED ABOVE COUNTERS OR OBSTRUCTIONS: +44" AFF TOP OF BOX WITH OPEN FORWARD APPROACH LOCATIONS OR +46" AFF TOP OF BOX WITH PARALLEL APROACHES.
15. (NOT USED)
16. ALL PERSONNEL WORKING WITH ENERGIZED EQUIPMENT WITHIN THE RESTRICTED ZONE PER NFPA–70E SHALL COMPLY WITH ALL NFPA–70E AND OSHA REQUIREMENTS AND BE ARC FLASH SAFETY CERTIFIED.

COMMUNICATIONS LEGEND

- MULTI–PORT DATA OUTLET +18'' (U.O.N.)
- SURFACE HORN –120V.
- CR CARDREADER/KEYCARD – SECURITY ENTRANCE ACCESS 1–GANG BOX +44"AFF w/1"C RISER –PAXTON P75 SERIES OR P38 IF MULLION MOUNTED.
- MDF MAIN DISTRIBUTION FRAME –RACK OR BACKBOARD –SEE PLANS
- IDF INTERMEDIATE DISTRIBUTION FRAME –RACK OR BACKBOARD –SEE PLANS
- ENCLOSE CIRCLE DENOTES FLOOR OUTLET –WALKER OR EQUAL
- P.A. SPEAKER –ELECTRO–VOICE OR EQUAL –COMPATIBLE WITH (E) SYSTEM +96''
- SURFACE BELL –SIZE AS NOTED –STANDARD MODEL MA OR EQUAL –120V.
- INTERCOM HANDSET –COMPATIBLE SPECIFIED SYSTEM +48''
- SURFACE MOUNTED CLOCK –SIZE AS NOTED –STANDARD CR –120V. SERIES OR EQUAL
- CCTV CLOSED CIRCUIT TELEVISION
  DENOTES THE ROTATION–VIEW OF THE CAMERA
- PTZ CLOSED CIRCUIT TELEVISION
  DENOTES THE ANGLE OF ROTATION OF THE CAMERA
- V CLOSED CIRCUIT (FIXED POSITION) CAMERA.
- PB PANIC BUTTON WIRELESS

ELECTRICAL ABBREVIATIONS

Δ	DELTA CONNECTED	CATV	CABLE TELEVISION	ENCL	ENCLOSURE	IDF	INTERMEDIATE DISTRIBUTION FRAME	MIN	MINIMUM
Y	WYE CONNECTED	CKT	CIRCUIT	EP	EXPLOSION PROOF	INCAN	INCANDESCENT	MPOE	MAIN POINT OF ENTRY
Ø	PHASE	CLG	CEILING	EQUIP	EQUIPMENT	IDC	INITIATING DEVICE CIRCUIT	MSB	MAIN SWITCHBOARD
&	AND	CO	CONDUIT ONLY	ETC	ET CETERA	IN	INCHES		
@	AT	COMM	COMMUNICATION	EVAP	EVAPORATOR	INST	INSTANTANEOUS	N	NEUTRAL
'	FEET	CONC	CONCRETE					(N)	NEW
"	INCHES	CONN	CONNECT	(F)	FUTURE	J	JUNCTION BOX	NA	NON–AUTOMATIC
		CONT	CONTINUATION OR CONTINUED	FA	FIRE ALARM			NAC	NOTIFICATION APPLIANCE CIRCUIT
A	AMPERES	COORD	COORDINATE	FACP	FIRE ALARM CONTROL PANEL	KV	KILOVOLTS	NC	NORMALLY CLOSED
AC	ALTERNATING CURRENT	CR	CONTROL RELAY	FAT	FIRE ALARM TERMINAL CABINET	KVA	KILOVOLT AMPERES	NIES	NOT IN ELECTRICAL SECTION
ACT	ABOVE COUNTERTOP/BACKSPLASH	CT	CURRENT TRANSFORMER	FIXT	FIXTURE	KW	KILOWATTS	NIC	NOT IN ELECTRICAL CODE
ADJ	ADJACENT, ADJOINING	COMP	COMPRESSOR	FLA	FULL LOAD AMPS			NO., #	NUMBER
AFD	ADJUSTABLE FREQUENCY DRIVE	CU	COPPER	FLEX	FLEXIBLE	L	LINE	NO	NORMALLY OPEN
AFF	ABOVE FINISHED FLOOR			FLUOR	FLUORESCENT	LB	ELBOW	NL	NIGHT LIGHT
AL	ALUMINUM	DC	DIRECT CURRENT	FS	FLOW SWITCH	LF	LINEAR FEET		
APPROX	APPROXIMATE	DET	DETAIL	FOR	FORWARD–OFF–REVERSE	LOS	LOCKOUT–STOP	OC	ON CENTER
ARCH	ARCHITECT	DISC	DISCONNECT	FT	FEET	LOH	LOCK–OFF–HALT	OH	OVERHEAD
AUTO	AUTOMATIC	DIST	DISTRIBUTION			LV	LOW VOLTAGE	OL	THERMAL OVERLOAD RELAY
AUX	AUXILIARY	DSA	DIVISION OF THE STATE ARCHITECT	GALV	GALVANIZED			OT	OVER TEMPERATURE
ALT	ALTERNATE	DWG	DRAWING	GND	GROUND	M	MOTOR	OSHPD	OFFICE OF STATEWIDE HEALTH PLANNING AND DEVELOPMENT
AWG	AMERICAN WIRE GAUGE			GC	GENERAL CONTRACTOR	MAX	MAXIMUM		
		(E), EXIST	EXISTING			MCA	MINIMUM CIRCUIT AMPS	PA	PUBLIC ADDRESS
B	BARE	EC	ELECTRICAL CONTRACTOR	HI	HIGH	MCC	MOTOR CONTROL CENTER	PB	PULL BOX
BC	BARE COPPER GROUND	EL, ELEV	ELEVATION	HOA	HAND–OFF–AUTO	MCM	THOUSAND CIRCULAR MILLS	PNL	PANEL
BKBD	BACKBOARD	EL	EMERGENCY LIGHT			MCP	MOTOR CIRCUIT PROTECTOR	PH	PHASE
BRKR	BREAKER	ELECT	ELECTRICAL	HOS	HAND–OFF–STANDBY	MDF	MAIN DISTRIBUTION FRAME	PR	PAIR
BLDG	BUILDING	EMS	ENERGY MANAGEMENT SYSTEM	HV	HIGH VOLTAGE	MECH	MECHANICAL	PRI	PRIMARY
		EMT	ELECTRICAL METALLIC TUBING	HVAC	HEATING, VENTILATION, AIR CONDITIONING	MFG	MANUFACTURER		
C	CONDUIT OR CONTRACTOR	EOL	END OF LINE						
CAB	CABINET								

PS	PRESSURE SWITCH	TH	THERMOSTAT
PWR	POWER	TRANSF	TRANSFORMER
		TYP	TYPICAL
(R)	REMOVE(D)	TSP	TWISTED SHIELDED PAIR
RA	REMOTE ANNUNCIATOR	THRU	THROUGH
RD	ROAD		
REQD	REQUIRED	UG	UNDERGROUND
REQMTS	REQUIREMENTS	UNO	UNLESS NOTED OTHERWISE
RGP	REDUNDANT GROUND PATH		
RM	ROOM	V	VOLTS
RECP	RECEPTACLE	VA	VOLT AMPS
RT	RAIN TIGHT	VFD	VARIABLE FREQUENCY DRIVE
		VM	VOLT METER
SCH	SCHEDULE		
SEC	SECONDS, SECONDARY	W	WIRE
SHT	SHEET	W/	WITH
SIG	SIGNAL	W/O	WITHOUT
SPECS	SPECIFICATIONS	WP	WEATHERPROOF
SW	SWITCH	WHD	WATT HOUR DEMAND METER
SWD	SWITCHED	WM	WATT METER
SP	SPARE	WH	WATER HEATER
STD	STANDARD	XFMER	TRANSFORMER
STR	STRANDED	(XR)	REMOVE AND RELOCATE(D)
SWBD	SWITCHBOARD		
TELE	TELEPHONE		
TEMP	TEMPERATURE		
TOA	TEST OFF AUTOMATIC		

12/15/21 11:44:02 AM F:\20\546 CSUS CHILD DEVELOPMENT CENTER\ENGR\SHEETS\546_E0.1 TITLE SHEET.DWG cmendez

Division of the State Ar

APPROVED
DIV. OF THE STATE ARCHITECT
APP: 02-119316 INC:
REVIEWED FOR
SS☐ FLS☐ ACS☑
DATE: 03/24/2022

Office of the State Fire Marshal

OFFICE OF THE STATE FIRE MARSHAL
APPROVED FIRE AND PANIC ONLY
03/14/22
21-0498
Approval of this plan does not authorize or approve any omission or deviation from applicable regulations. Final approval is subject to field inspection. One set of approved plans shall be available on the project site at all times.

CSUS CHILD DEVELOPMENT CENTER

CALIFORNIA STATE UNIVERSITY, STANISLAUS
ONE UNIVERSITY CIRCLE
TURLOCK, CA 95382

ehdd.

PIER 1, BAY 2
THE EMBARCADERO
SAN FRANCISCO, CA 94111

INFO@EHDD.COM
+1 415-285-9193

Consultant

PEZZONI ENGINEERING, INC.
CONSULTING ELECTRICAL ENGINEERS
1150 9TH Street, Suite #1415 Modesto, CA 95354
PHONE: 209 . 554 . 4492
HTTP://WWW.PEZENGR.COM

PEZZONI ENGINEERING, INC. © Copyrighted 2020

Stamp

REGISTERED PROFESSIONAL ENGINEER
KEVIN L. PEZZONI
No. 16705
Exp. 6/30/23
ELECTRICAL
STATE OF CALIFORNIA

Printing	Date
95% CONSTRUCTION DOCUMENTS	06.25.2021
PERMIT SET	08.16.2021
PERMIT SET - DSA V2	12.15.2021
PERMIT SET - SFM	12.21.2021

Revisions and Description	Date

Scale
AS NOTED

Drawn by
CCM / KP

EHDD Job Number
20020

Sheet Title
GENERAL ELECTRICAL NOTES AND ABBREVIATIONS

Sheet Number
E0.1 V3

8/6/2021 5:44:22 PM

FIXTURE SCHEDULE

TAG	DESCRIPTION	MANUFACTURER / AND CATALOG NUMBER	LAMPS WATTS	VOLTAGE	MOUNTING	COMMENTS
A1	2x2 ARCH TROFFER	FINELITE #HPR LED-A-2X2-DCO-S-835-120V-SC-C1	LED 28.5W 3,400lm	120V	RECESSED	
A2	2x4 ARCH TROFFER	FINELITE #HPR LED-A-2X4-DCO-B-835-120V-SC-C1	LED 35.2W 4,750lm	120V	RECESSED	
A3	2x4 ARCH TROFFER COLOR TUNING	FINELITE #HPR LED-A-2X4-DCO-B-9TW-120V-SC-C1	LED 38.7W 4,750lm	120V	RECESSED	
B1	2x2 FLAT PANEL TROFFER	HEW #LP-22-L40/835-EQCLIPS-DIM-UNV-LP22SMK	LED 39.2W 4,155lm	UNV	SURFACE	
B2	1x4 FLAT PANEL TROFFER w/FLANGE KIT	HEW #LP-14-L40/835-DFK-1248W-DIM-UNV	LED 39.7 4,030lm	120V	RECESSED	
B3	2x4 FLAT PANEL TROFFER	HEW #LP-24-L50/835-EQCLIPS-DIM-UNV	LED 48.1W 4,900lm	120V	RECESSED	
D1	8 FOOT INDUSTRIAL LENSED	HEW #76R-8-L104/840-VBY-2-DIM-120	LED 69.5W 10,500lm	120V	PENDANT @ +9'-6"AFF	
D2	8 FOOT INDUSTRIAL LENSED	HEW #76R-8-L60/840-VBY-2-DIM-120	LED 39.8W 6,100lm	120V	PENDANT @ +9'-6"AFF	
F	UNDERCABINET LIGHTING	COLOR KINECTICS Ew PROFILE POWERCORE GEN4 3500K	LED 3W/ft 200lm/ft	120V	UNDERCABINET	LENGTH PER PLAN COORDINATE W/CASEWORK VENDOR
G1	DECORATIVE PENDANT 10" SMALL	TAF STUDIO RIME PENDANT LAMP	LED 7W 750lm	120V	PENDANT COORD W/ARCH.	
G2	DECORATIVE PENDANT 14" MEDUIM	TAF STUDIO RIME PENDANT LAMP	LED 7W 750lm	120V	PENDANT COORD W/ARCH.	
H1	DIRECT/INDIRECT PENDANT 36" ROUND TUNABLE WHITE	FINELITE #HP-4C-P-ID-3'-S-B-8TW-TG-F-96-120-DC-FC-10% -FA150-xx-SW	LED 77W 8,300lm (TOTAL)	UNV	PENDANT @8'-0"AFF	
H2	DIRECT/INDIRECT PENDANT 24" ROUND TUNABLE WHITE	FINELITE #HP-4C-P-ID-2'-S-B-8TW-TG-F-96-120-DC-FC-10% -FA150-xx-SW	LED 46W 4,900lm (TOTAL)	UNV	PENDANT @8'-0"AFF	
J1	DIRECT/INDIRECT PENDANT 36" ROUND	FINELITE #HP-4C-P-ID-3'-S-B-835-TG-F-96-120-DC-FC-10% -FA150-xx-SW	LED 77W 8,300lm (TOTAL)	UNV	PENDANT @8'-0"AFF	
J2	DIRECT/INDIRECT PENDANT 24" ROUND	FINELITE #HP-4C-P-ID-2'-S-B-835-TG-F-96-120-DC-FC-10% -FA150-xx-SW	LED 46W 4,900lm (TOTAL)	UNV	PENDANT @8'-0"AFF	
L1	RECESSED 40" ROUND	MOLTO LUCE "#BINA" #BINA-R-RD-35K-40-D-WH-WH-WH	LED 78W 8,800lm	UNV	RECESSED	
L2	RECESSED 24" ROUND	MOLTO LUCE "#BINA" #BINA-R-RD-35K-24-D-WH-WH-WH	LED 40W 3,330lm	UNV	RECESSED	
M	5.5" ROUND SURFACE AIMABLE WALL LIGHT	FLUXWERX #TC1-T-05-S-J1-WW-W1-835-C-F2-M	LED 16W 2,300lm	UNV	SURFACE	
N	4.5" ROUND DOWNLIGHT IC HOUSING	HEW #4DR-TL-L10/835-DIM-UNV-OW-OF-WH #I-F1	LED 9W 1,030lm	UNV	RECESSED	
O	15 FOOT LINEAR WALL	FINELITE #S17-ACF-PF-15'-S-835-120V-SC	LED 54W 4,080lm	UNV	SURFACE @+7'-0"	
P	POLE LIGHT	VISIONAIRE FIXTURE: PRE-2L-T5-64LC-3-4K-UNV-PT-BZ-DIM-WSC20 POLE: RNTS-4R-11-14-9BC-343-T4R-BZ-RBC	LED 71W 9,400lm 4000K	120V	POLE MOUNT @+14'-0"	
Q	6" ROUND ADJUSTABLE DOWNLIGHT EXTERIOR	KIRLIN #LRR-06445-2500L-120-41K-MFL-45-38F-SH	LED 35W 2,720lm	120V	RECESSED	WET LISTED, GASKETED
S1	SURFACE 32" ROUND	MOLTO LUCE "#BINA" #BINA-S-RD-35K-32-D-WH-WH-WH	LED 60W 6,630lm	UNV	SURFACE	

FIXTURE SCHEDULE (CONTINUED)

TAG	DESCRIPTION	MANUFACTURER / AND CATALOG NUMBER	LAMPS WATTS	VOLTAGE	MOUNTING	COMMENTS
S2	SURFACE 24" ROUND	MOLTO LUCE "#BINA" #BINA-S-RD-35K-24-D-WH-WH-WH	LED 40W 3,330lm	UNV	SURFACE	
T1	6" ROUND ADJUSTABLE DOWNLIGHT	HEW #6AR-L15/835-DIM-UNV-OW-OF-CS-N-F1	LED 15.1W 1,500lm	UNV	RECESSED	
T2	6" ROUND ADJUSTABLE DOWNLIGHT	HEW #6AR-L20/835-DIM-UNV-OW-OF-CS-N-F1	LED 21.0W 2,050lm	UNV	RECESSED	
W	EXTERIOR WALL SCONCE	BEGA #33816-K4-BLK	LED 13.9W 1,700lm 4000K	UNV	WALL MOUNTED @+9'-0"	BLACK FINISH
X	EXIT SIGN	EMERGLITE #WPREMACG	LED GREEN	UNV	UNIVERSAL PENDANT	WHITE FINISH

STANDARD SEQUENCE OF OPERATIONS	AUTO ON [1]	MANUAL ON (VACANCY)	AUTO OFF (30MIN MAX)	AUTO PARTIAL OFF [2]	AUTO OFF AFTER HOURS (20MIN MAX)	TIME ON	TIME OFF	ASTRONOMIC or PHOTOCELL ON/OFF	AUTO STEP CONTROL WITH OFF [4]	AUTO CONTINUOUS DIM WITH OFF [4,5]	MANUAL BI-LEVEL REDUCTION CONTROL [6]	MANUAL CONTINUOUS DIM CONTROL	MANUAL ON/OFF SWITCH	MANUAL DIMMER SWITCH	DISPLAY, ACCENT, TASK CONTROL [7]	RECEPTACLE CONTROL	SEQUENCE OF OPERATION
ROOM TYPE	OCCUPANCY SENSOR					TIME SWITCH			DAYLIGHT CTL		LT REDUCT		MANUAL CONTROL				
Offices (enclosed ≤ 250 sq ft)	50%		20 min						D		●	D	●	D	●	●	Auto On 50%. Occupancy sensor Auto Full Off. Local control and ≥50% light reduction with two on/off controls. Auto receptacle control. Where ≥150W in daylight area, use continuous dimming daylighting control and dimmer switch.
Offices (enclosed > 250 sq ft)	50%		20 min						D		●	D	●	D	●	●	Auto On 50%. Occupancy sensor Auto Full Off. Local control and ≥50% light reduction with two on/off controls. Auto receptacle control. Where ≥150W in daylight area, use continuous dimming daylighting control and dimmer switch.
Office Open Plan (w/individual workstations)	50%		20 min						D		●	D	●	D	●	●	Auto On 50%. Occupancy sensor Auto Full Off. Local control and ≥50% light reduction with two on/off controls. Auto receptacle control. Where ≥150W in daylight area, use continuous dimming daylighting control and dimmer switch.
Laboratory Classroom		●		50% 20 min			close		D		●	D	●	D			Manual On. Partial Auto Off 50%. Scheduled Off after hours. Local control and ≥50% light reduction with two on/off controls. Where ≥150W in daylight area, use continuous dimming daylighting control and dimmer switch.
Conference/Meeting Room	50%		20 min						D		●	D	●	D	●	●	Auto On 50%. Occupancy sensor Auto Full Off. Local control and ≥50% light reduction with two on/off controls. Auto receptacle control. Where ≥150W in daylight area, use continuous dimming daylighting control and dimmer switch.
Copy/Print Room	50%		20 min						D		●	D	●	D		●	Auto On 50%. Occupancy sensor Auto Full Off. Local control and ≥50% light reduction with two on/off controls. Auto receptacle control. Where ≥150W in daylight area, use continuous dimming daylighting control and dimmer switch.
Electrical/Mech/Equip Rooms		●	20 min										●				Manual On. Occupancy sensor Auto Off. Local On/Off control device.
Restroom	100%		20 min										●				Auto On 100%. Occupancy sensor Auto Full Off. Local On/Off control device.
Lounge/Break Room	50%		20 min						D		●	D	●	D	●	●	Auto On 50%. Occupancy sensor Auto Full Off. Local control and ≥50% light reduction with two on/off controls. Auto receptacle control. Where ≥150W in daylight area, use continuous dimming daylighting control and dimmer switch.
Dining Area (Cafeteria)	50%		20 min						D		●	D	●	D	●		Auto On 50%. Occupancy sensor Auto Full Off. Local control and ≥50% light reduction with two on/off controls. Where ≥150W in daylight area, use continuous dimming daylighting control and dimmer switch.
Corridor	100%			50% 20 min			close			D			●	D	●		Occupancy Sensor Auto On 100%. Partial Auto Off 50%. Scheduled Shut-Off after hours. Local On/off control device. Where ≥150W in daylight area, use continuous dimming daylighting control and dimmer switch.
Storage Room (<50 sq ft)		●	20 min										●				Manual On. Occupancy sensor Auto Full Off. Local On/Off control device.
Storage Room (>50 and ≤1000 sq ft)		●	20 min						D				●	D			Manual On. Occupancy sensor Auto Full Off. Where ≥150W in daylight area, use continuous dimming daylighting control and dimmer switch.
Storage Room (>1000 sq ft)		●		50% 20 min			close		D				●	D			Manual On. Occupancy sensor Partial Auto Off 50%. Scheduled Shut Off. Local On/off control device. Where ≥150W in daylight area, use continuous dimming daylighting control and dimmer switch.
Building Façade / Landscape	100%					6AM [3]	12AM [3]	●									Dusk Auto On with astronomical time switch or photocell. Scheduled Shut Off no later than midnight or business close. Morning Auto On no earlier than 6AM or business open. Dawn Auto Off.
Exterior / Parking Lots / Site Lighting	100%					6AM [3]	12AM [3]	●									Dusk Auto On with astronomical time switch or photocell. Reduce at least 30% from midnight or up to one hour after business close. Auto On 100% at 6:00AM or up to one hour before business open. Dawn Auto Off.

●= Designation for code compliant default control design for spaces without daylighting control

D = Where daylighting control is required, "D" designation indicates controls required in the space for code compliance design

CK = Captive Key Switch system for use in Hotel/Motel and Guest Suites

NOTES:

[1] Lighting may be Manual On or Auto Partial On to ≤50% . Full Auto On to 100% is only permitted in Corridors, Stairwells, Lobbies, Restrooms, Healthcare, Elect/Mech Rooms, Storage Rooms <50sqft and where Manual On endangers safety or

[2] Partial Auto Off must reduce lighting by ≥50% during normal operating hours. Full Auto Off would comply with Partial Auto Off.

[3] Exterior / Parking / Site lighting must Auto Off during daylight hours, reduce by at least 30% between the hours of midnight and 6AM or from one hour after business close until 6AM before business opening.

[4] Automatic daylight control required where ≥150W of lighting is in the toplight or sidelight daylight area. Continuous dimming with Off is used and assumes 0-10V dimming fixtures in daylight and non-daylight area unless known otherwise.

[5] Code does not require automatic continuous dimming, but it is a general Wattstopper default design when daylighting is required.

[6] Manual bilevel lighting reduction control must allow ≥50% of the general lighting to be manually turned off by a control device located in the space.

[7] Display, Accent and Task lighting must be independently controlled from other lighting in the space. It is required to Auto Off with occupancy sensors or time switch control, but is exempt from automatic daylighting control.

Division of the State Architect
APPROVED
DIV. OF THE STATE ARCHITECT
APP: 02-119316 INC:
REVIEWED FOR
SS☐ FLS☐ ACS☑
DATE: 03/24/2022

Office of the State Fire Marshal

OFFICE OF THE STATE FIRE MARSHAL
APPROVED FIRE AND PANIC ONLY
03/14/22
21-0498
Approval of this plan does not authorize or approve any omission or deviation from applicable requirements. Final approval is subject to field inspection. One set of approved plans shall be available on the project site at all times.

CSUS CHILD DEVELOPMENT CENTER

CALIFORNIA STATE UNIVERSITY, STANISLAUS
ONE UNIVERSITY CIRCLE
TURLOCK, CA 95382

ehdd.

PIER 1, BAY 2
THE EMBARCADERO
SAN FRANCISCO, CA 94111

INFO@EHDD.COM
+1 415-285-9193

Consultant

PEZZONI ENGINEERING, INC.
CONSULTING ELECTRICAL ENGINEERS
1100 PITTMAN, SUITE #101 MODESTO, CA 95354
PHONE: 209 . 554 . 4402
HTTP://WWW.PEZZONIGA.COM

PEZZONI ENGINEERING, INC. © Copyrighted 2020

Stamp

Printing	Date
95% CONSTRUCTION DOCUMENTS	06.25.2021
PERMIT SET	08.16.2021
PERMIT SET - DSA V2	12.15.2021
PERMIT SET - SFM	12.21.2021

Revisions and Description	Date

Scale
AS NOTED

Drawn by
CCM / KP

EHDD Job Number
20020

Sheet Title
LIGHTING SCHEDULE

Sheet Number
E0.2 V3

12/15/21 11:44:06 AM F:\20\546 CSUS CHILD DEVELOPMENT CENTER\ENGR\SHEETS\V3\E0.2 LIGHTING SCHEDULE.DWG cmendez

8/6/2021 5:44:22 PM

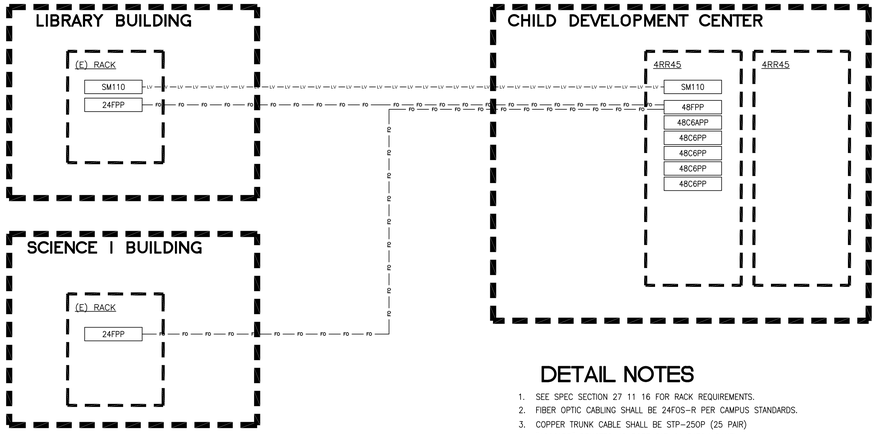

DETAIL NOTES

1. SEE SPEC SECTION 27 11 16 FOR RACK REQUIREMENTS.
2. FIBER OPTIC CABLING SHALL BE 24FOS-R PER CAMPUS STANDARDS.
3. COPPER TRUNK CABLE SHALL BE STP-250P (25 PAIR)
4. "48C6APP" DENOTES 48 PORT CAT-6A PATCH PANEL
5. "48C6PP" DENOTES 48 PORT CAT-6 PATCH PANEL
6. "xxFPP" DENOTES FIBER TRAY & PATCH PANEL W/ "xx" DENOTES QUANIYITY OF FIBER STRANDS.

1 NETWORKING RISER DIAGRAM

SCALE: NTS

TELECOMMUNICATION / SIGNAL OUTLET SCHEDULE

	TERMINATION QUANTITY					MOUNTING	
ROOM-OUTLET	DATA	MATV	OTHER	CABLING	HOMERUN/RACEWAY	LOCATION	HT.
EXT.1	2			2UTP6A-4	1 1/4" TO ATTIC & WIREWAY TO MDF (132)	FLUSH WP 4 SQ WALL BOX	AS SHOWN
EXT.2	2			2UTP6A-4	1 1/4" TO ATTIC & WIREWAY TO MDF (132)	FLUSH WP 4 SQ WALL BOX	AS SHOWN
EXT.3	2			2UTP6A-4	1 1/4" TO ATTIC & WIREWAY TO MDF (132)	FLUSH WP 4 SQ WALL BOX	AS SHOWN
EXT.4	2			2UTP6A-4	1 1/4" TO ATTIC & WIREWAY TO MDF (132)	FLUSH WP 4 SQ WALL BOX	AS SHOWN
EXT.5	2			2UTP6-4	1 1/4" TO ATTIC & WIREWAY TO MDF (132)	TERMINATE AT CAMERA	–
EXT.6	1			1UTP6-4	1 1/4" TO ATTIC & WIREWAY TO MDF (132)	TERMINATE AT CAMERA	–
EXT.7	2			2UTP6-4	1 1/4" TO ATTIC & WIREWAY TO MDF (132)	TERMINATE AT CAMERA	–
EXT.8	2			2UTP6-4	1 1/4" TO ATTIC & WIREWAY TO MDF (132)	TERMINATE AT CAMERA	–
EXT.9	1			1UTP6-4	1 1/4" TO ATTIC & WIREWAY TO MDF (132)	TERMINATE AT CAMERA	–
EXT.10	1			1UTP6-4	1 1/4" TO ATTIC & WIREWAY TO MDF (132)	TERMINATE AT CAMERA	–
100.1	2			2UTP6-4	1 1/4" TO ATTIC & WIREWAY TO MDF (132)	3 GANG MEDIA BOX	+60"AFF
100.2	3			3UTP6-4	1 1/4" UNDERGROUND TO MDF (132)	FLUSH 4SQ WALL BOX	+18" AFF
100.3	3			3UTP6-4	1 1/4" UNDERGROUND TO MDF (132)	FLUSH 4SQ WALL BOX	+18" AFF
100.4	1			1UTP6-4	1 1/4" TO ATTIC & WIREWAY TO MDF (132)	TERMINATE AT CAMERA	–
101.1	2			2UTP6-4	1 1/4" TO ATTIC & WIREWAY TO MDF (132)	FLUSH 4SQ WALL BOX	+18" AFF
101.2	2			2UTP6-4	1 1/4" TO ATTIC & WIREWAY TO MDF (132)	FLUSH 4SQ WALL BOX	+18" AFF
102.1	2			2UTP6-4	1 1/4" TO ATTIC & WIREWAY TO MDF (132)	FLUSH 4SQ WALL BOX	+18" AFF
102.2	2			2UTP6-4	1 1/4" TO ATTIC & WIREWAY TO MDF (132)	FLUSH 4SQ WALL BOX	+18" AFF
102.3	2			2UTP6-4	1 1/4" TO ATTIC & WIREWAY TO MDF (132)	FLUSH 4SQ WALL BOX	+18" AFF
103.1	2			2UTP6A-4	1 1/4" TO ATTIC & WIREWAY TO MDF (132)	TERMINATE MALE ABOVE CLG.	–
103.2	2			2UTP6-4	1 1/4" TO ATTIC & WIREWAY TO MDF (132)	3 GANG MEDIA BOX	+60"AFF
104.1	2			2UTP6-4	1 1/4" TO ATTIC & WIREWAY TO MDF (132)	FLUSH 4SQ WALL BOX	+18" AFF
104.2	2			2UTP6-4	1 1/4" TO ATTIC & WIREWAY TO MDF (132)	FLUSH 4SQ WALL BOX	+18" AFF
105.1	2			2UTP6-4	1 1/4" TO ATTIC & WIREWAY TO MDF (132)	FLUSH 4SQ WALL BOX	+18" AFF
105.2	2			2UTP6-4	1 1/4" TO ATTIC & WIREWAY TO MDF (132)	FLUSH 4SQ WALL BOX	+18" AFF
106.1	2			2UTP6-4	1 1/4" TO ATTIC & WIREWAY TO MDF (132)	FLUSH 4SQ WALL BOX	+18" AFF
107.1	2			2UTP6-4	1 1/4" TO ATTIC & WIREWAY TO MDF (132)	FLUSH 4SQ WALL BOX	+42" AFF
107.2	2			2UTP6-4	1 1/4" TO ATTIC & WIREWAY TO MDF (132)	FLUSH 4SQ WALL BOX	+42" AFF
107.3	1			1UTP6-4	1 1/4" TO ATTIC & WIREWAY TO MDF (132)	FLUSH 4SQ WALL BOX	+44" AFF
107.4	2			2UTP6-4	1 1/4" TO ATTIC & WIREWAY TO MDF (132)	TERMINATE AT CAMERA	–
			1	1 AUDIO CABLE	1 1/4" TO ATTIC & WIREWAY TO 110.2		
110.1	4			4UTP6-4	1 1/4" TO ATTIC & WIREWAY TO MDF (132)	FLUSH 4SQ WALL BOX	+18" AFF
110.2			1	1 AUDIO CABLE	1 1/4" U.G. TO 110.4	FLUSH 4SQ WALL BOX	+18" AFF
			1	1 AUDIO CABLE	1 1/4" TO ATTIC TO 107.4		
			1	1 AUDIO CABLE	1 1/4" TO ATTIC TO 111.5		
			1	1 AUDIO CABLE	1 1/4" U.G. TO 110.9		
110.3	4			4UTP6-4	1 1/4" TO ATTIC & WIREWAY TO MDF (132)	FLUSH 4SQ WALL BOX	+18" AFF
110.4			1	1 AUDIO CABLE	1 1/4" U.G. TO 110.2	FLUSH 4SQ WALL BOX	+18" AFF
110.5	4			4UTP6-4	1 1/4" TO ATTIC & WIREWAY TO MDF (132)	FLUSH 4SQ WALL BOX	+18" AFF
110.6	2		1	2UTP6-4	1 1/4" TO ATTIC & WIREWAY TO MDF (132)	3 GANG MEDIA BOX	+60"AFF
			1	VGA/HDMI/AUDIO	1 1/4" TO 110.7		
110.7			1	VGA/HDMI/AUDIO	1 1/4" TO 110.6	FLUSH 4SQ WALL BOX	+18" AFF
110.8	4			4UTP6-4	1 1/4" TO ATTIC & WIREWAY TO MDF (132)	FLUSH 4SQ WALL BOX	+18" AFF
110.9			1	1 AUDIO CABLE	1 1/4" U.G. TO 110.2	FLUSH 4SQ WALL BOX	+18" AFF
110.10	4			4UTP6-4	1 1/4" TO ATTIC & WIREWAY TO MDF (132)	FLUSH 4SQ WALL BOX	+18"AFF
110.11	2			2UTP6A-4	1 1/4" TO ATTIC & WIREWAY TO MDF (132)	TERMINATE MALE ABOVE CLG.	–
111.1	1			1UTP6-4	1 1/4" TO ATTIC & WIREWAY TO MDF (132)	FLUSH 4SQ WALL BOX	+44" AFF
111.2	2			2UTP6-4	1 1/4" TO ATTIC & WIREWAY TO MDF (132)	FLUSH 4SQ WALL BOX	+42" AFF
111.3	2			2UTP6-4	1 1/4" TO ATTIC & WIREWAY TO MDF (132)	FLUSH 4SQ WALL BOX	+42" AFF
111.4	2			2UTP6-4	1 1/4" TO ATTIC & WIREWAY TO MDF (132)	FLUSH 4SQ WALL BOX	+42" AFF
111.5	2			2UTP6-4	1 1/4" TO ATTIC & WIREWAY TO MDF (132)	TERMINATE AT CAMERA	–
			1	1 AUDIO CABLE	1 1/4" TO ATTIC & WIREWAY TO 110.2		
113.1	1			1UTP6-4	1 1/4" TO ATTIC & WIREWAY TO MDF (132)	TERMINATE AT CAMERA	–
115.1	1			1UTP6-4	1 1/4" TO ATTIC & WIREWAY TO MDF (132)	FLUSH 4SQ WALL BOX	+44" AFF
115.2	2			2UTP6-4	1 1/4" TO ATTIC & WIREWAY TO MDF (132)	FLUSH 4SQ WALL BOX	+42" AFF
115.3	2			2UTP6-4	1 1/4" TO ATTIC & WIREWAY TO MDF (132)	FLUSH 4SQ WALL BOX	+42" AFF
115.4	2			2UTP6-4	1 1/4" TO ATTIC & WIREWAY TO MDF (132)	TERMINATE AT CAMERA	–
			1	1 AUDIO CABLE	1 1/4" TO ATTIC & WIREWAY TO 118.2		
118.1	4			4UTP6-4	1 1/4" TO ATTIC & WIREWAY TO MDF (132)	FLUSH 4SQ WALL BOX	+18" AFF
118.2			1	1 AUDIO CABLE	1 1/4" U.G. TO 110.4	FLUSH 4SQ WALL BOX	+18" AFF
			1	1 AUDIO CABLE	1 1/4" TO ATTIC TO 115.4		
			1	1 AUDIO CABLE	1 1/4" TO ATTIC TO 119.5		
			1	1 AUDIO CABLE	1 1/4" U.G. TO 110.9		
118.3	4			4UTP6-4	1 1/4" TO ATTIC & WIREWAY TO MDF (132)	FLUSH 4SQ WALL BOX	+18" AFF
118.4			1	1 AUDIO CABLE	1 1/4" U.G. TO 110.2	FLUSH 4SQ WALL BOX	+18" AFF
118.5	4			4UTP6-4	1 1/4" TO ATTIC & WIREWAY TO MDF (132)	FLUSH 4SQ WALL BOX	+18" AFF
118.6	2		1	2UTP6-4	1 1/4" TO ATTIC & WIREWAY TO MDF (132)	3 GANG MEDIA BOX	+60"AFF
			1	VGA/HDMI/AUDIO	1 1/4" TO 110.7		
118.7			1	VGA/HDMI/AUDIO	1 1/4" TO 110.6	FLUSH 4SQ WALL BOX	+18" AFF
118.8	4			4UTP6-4	1 1/4" TO ATTIC & WIREWAY TO MDF (132)	FLUSH 4SQ WALL BOX	+18" AFF
118.9			1	1 AUDIO CABLE	1 1/4" U.G. TO 110.2	FLUSH 4SQ WALL BOX	+18" AFF
118.10	4			4UTP6-4	1 1/4" TO ATTIC & WIREWAY TO MDF (132)	FLUSH 4SQ WALL BOX	+18"AFF
118.11	2			2UTP6A-4	1 1/4" TO ATTIC & WIREWAY TO MDF (132)	TERMINATE MALE ABOVE CLG.	–
119.1	1			1UTP6-4	1 1/4" TO ATTIC & WIREWAY TO MDF (132)	FLUSH 4SQ WALL BOX	+44" AFF
119.2	2			2UTP6-4	1 1/4" TO ATTIC & WIREWAY TO MDF (132)	FLUSH 4SQ WALL BOX	+42" AFF
119.3	2			2UTP6-4	1 1/4" TO ATTIC & WIREWAY TO MDF (132)	FLUSH 4SQ WALL BOX	+42" AFF
119.4	2			2UTP6-4	1 1/4" TO ATTIC & WIREWAY TO MDF (132)	TERMINATE AT CAMERA	–
			1	1 AUDIO CABLE	1 1/4" TO ATTIC & WIREWAY TO 118.2		
120.1	2			2UTP6-4	1 1/4" TO ATTIC & WIREWAY TO MDF (132)	FLUSH 4SQ WALL BOX	+18" AFF
120.2	2			2UTP6-4	1 1/4" UNDERGROUND TO MDF (132)	FLUSH 4SQ WALL BOX	+18" AFF
121.1	2			2UTP6-4	1 1/4" UNDERGROUND TO MDF (132)	FLUSH 4SQ WALL BOX	+18" AFF
121.2	2			2UTP6-4	1 1/4" TO ATTIC & WIREWAY TO MDF (132)	FLUSH 4SQ WALL BOX	+18" AFF
121.3	1			1UTP6-4	1 1/4" TO ATTIC & WIREWAY TO MDF (132)	TERMINATE AT CAMERA	–
122.1	2			2UTP6-4	1 1/4" TO ATTIC & WIREWAY TO MDF (132)	FLUSH 4SQ WALL BOX	+18" AFF
122.2	2			2UTP6A-4	1 1/4" TO ATTIC & WIREWAY TO MDF (132)	TERMINATE MALE ABOVE CLG.	–
122.3	2			2UTP6-4	1 1/4" TO ATTIC & WIREWAY TO MDF (132)	FLUSH 4SQ WALL BOX	+42" AFF
126.1	2			2UTP6-4	1 1/4" TO ATTIC & WIREWAY TO MDF (132)	FLUSH 4SQ WALL BOX	+18" AFF
126.2	2			2UTP6-4	1 1/4" TO ATTIC & WIREWAY TO MDF (132)	TERMINATE AT CAMERA	–
			1	1 AUDIO CABLE	1 1/4" TO ATTIC & WIREWAY TO 127.2		
127.1			1	1 AUDIO CABLE	1 1/4" TO ATTIC & WIREWAY TO 128.2	FLUSH 4SQ WALL BOX	+18" AFF
127.2			1	1 AUDIO CABLE	1 1/4" TO ATTIC & WIREWAY TO 126.2	FLUSH 4SQ WALL BOX	+18" AFF
127.3	2			2UTP6-4	1 1/4" TO ATTIC & WIREWAY TO MDF (132)	FLUSH 4SQ WALL BOX	+18" AFF
127.4	2		1	2UTP6-4	1 1/4" TO ATTIC & WIREWAY TO MDF (132)	3 GANG MEDIA BOX	+60"AFF
			1	VGA/HDMI/AUDIO	1 1/4" TO 127.5		
127.5			1	VGA/HDMI/AUDIO	1 1/4" TO 127.4	FLUSH 4SQ WALL BOX	+18" AFF
127.6	2			G	1 1/4" TO ATTIC & WIREWAY TO MDF (132)	FLUSH 4SQ WALL BOX	+18" AFF
127.7	2			2UTP6A-4	1 1/4" TO ATTIC & WIREWAY TO MDF (132)	TERMINATE MALE ABOVE CLG.	–
128.1	2			2UTP6-4	1 1/4" TO ATTIC & WIREWAY TO MDF (132)	FLUSH 4SQ WALL BOX	+18" AFF
128.2	2			2UTP6-4	1 1/4" TO ATTIC & WIREWAY TO MDF (132)	TERMINATE AT CAMERA	–
			1	1 AUDIO CABLE	1 1/4" TO ATTIC & WIREWAY TO 127.1		
134.1	2			2UTP6-4	1 1/4" TO ATTIC & WIREWAY TO MDF (132)	FLUSH 4SQ WALL BOX	+60" AFF
134.2	2			2UTP6-4	1 1/4" TO ATTIC & WIREWAY TO MDF (132)	FLUSH 4SQ WALL BOX	+18" AFF
134.3	2		1	2UTP6-4	1 1/4" TO ATTIC & WIREWAY TO MDF (132)	3 GANG MEDIA BOX	+60"AFF
			1	VGA/HDMI/AUDIO	1 1/4" TO 134.6		
134.4	2			2UTP6-4	1 1/4" TO ATTIC & WIREWAY TO MDF (132)	FLUSH 4SQ WALL BOX	+18" AFF
134.5	2			2UTP6-4	1 1/4" TO ATTIC & WIREWAY TO MDF (132)	FLUSH 4SQ WALL BOX	+18" AFF
134.6	2				1 1/4" UNDERGROUND TO MDF (132)	RFB4 FLOORBOX	–
			1	VGA/HDMI/AUDIO	1 1/4" U.G. TO 134.3		
137.7	2				1 1/4" UNDERGROUND TO MDF (132)	RFB4 FLOORBOX	–
137.8	2			2UTP6A-4	1 1/4" TO ATTIC & WIREWAY TO MDF (132)	TERMINATE MALE ABOVE CLG.	–
135.1	2			2UTP6-4	1 1/4" TO ATTIC & WIREWAY TO MDF (132)	FLUSH 4SQ WALL BOX	+42" AFF
135.2	2			2UTP6-4	1 1/4" TO ATTIC & WIREWAY TO MDF (132)	FLUSH 4SQ WALL BOX	+42" AFF
135.3	1			1UTP6-4	1 1/4" TO ATTIC & WIREWAY TO MDF (132)	FLUSH 4SQ WALL BOX	+44" AFF
138.1	4			4UTP6-4	1 1/4" TO ATTIC & WIREWAY TO MDF (132)	FLUSH 4SQ WALL BOX	+18" AFF
138.2			1	1 AUDIO CABLE	1 1/4" U.G. TO 138.4	FLUSH 4SQ WALL BOX	+18" AFF
			1	1 AUDIO CABLE	1 1/4" U.G. TO 138.9		
138.3	4			4UTP6-4	1 1/4" TO ATTIC & WIREWAY TO MDF (132)	FLUSH 4SQ WALL BOX	+18" AFF
138.4			1	1 AUDIO CABLE	1 1/4" U.G. TO 110.2	FLUSH 4SQ WALL BOX	+18" AFF
138.5	4			4UTP6-4	1 1/4" TO ATTIC & WIREWAY TO MDF (132)	FLUSH 4SQ WALL BOX	+18" AFF
138.6	2		1	2UTP6-4	1 1/4" TO ATTIC & WIREWAY TO MDF (132)	3 GANG MEDIA BOX	+60"AFF
			1	VGA/HDMI/AUDIO	1 1/4" TO 138.7		
138.7			1	VGA/HDMI/AUDIO	1 1/4" TO 138.6	FLUSH 4SQ WALL BOX	+18" AFF
138.8	4			4UTP6-4	1 1/4" TO ATTIC & WIREWAY TO MDF (132)	FLUSH 4SQ WALL BOX	+18" AFF
138.9			1	1 AUDIO CABLE	1 1/4" U.G. TO 138.2	FLUSH 4SQ WALL BOX	+18" AFF
138.10	4			4UTP6-4	1 1/4" TO ATTIC & WIREWAY TO MDF (132)	FLUSH 4SQ WALL BOX	+18"AFF
138.11	2			2UTP6A-4	1 1/4" TO ATTIC & WIREWAY TO MDF (132)	TERMINATE MALE ABOVE CLG.	–
139.1	2			2UTP6-4	1 1/4" TO ATTIC & WIREWAY TO MDF (132)	FLUSH 4SQ WALL BOX	+42" AFF
139.2	2			2UTP6-4	1 1/4" TO ATTIC & WIREWAY TO MDF (132)	FLUSH 4SQ WALL BOX	+42" AFF
139.3	1			1UTP6-4	1 1/4" TO ATTIC & WIREWAY TO MDF (132)	FLUSH 4SQ WALL BOX	+44" AFF
140.1	1			1UTP6-4	1 1/4" TO ATTIC & WIREWAY TO MDF (132)	TERMINATE AT CAMERA	–

12/15/21 11:44:09 AM F:\20\546 CSUS CHILD DEVELOPMENT CENTER\ENGR\SHEETS\546_E0.2 LIGHTING SCHEDULE.DWG cmendez

Division of the State Architect
APPROVED
DIV. OF THE STATE ARCHITECT
APP: 02-119316 INC:
REVIEWED FOR
SS☐ FLS☐ ACS☑
DATE: 03/24/2022

Office of the State Fire Marshal
OFFICE OF THE STATE FIRE MARSHAL
APPROVED FIRE AND PANIC ONLY
03/14/22
21-0498
Approval of this plan does not authorize or approve any omission or deviation from applicable regulations. Final approval is subject to field inspection. One set of approved plans shall be available on the project site at all times.

CSUS CHILD DEVELOPMENT CENTER

CALIFORNIA STATE UNIVERSITY, STANISLAUS
ONE UNIVERSITY CIRCLE
TURLOCK, CA 95382

ehdd.

PIER 1, BAY 2
THE EMBARCADERO
SAN FRANCISCO, CA 94111

INFO@EHDD.COM
+1 415-285-9193

Consultant

PEZZONI ENGINEERING, INC.
CONSULTING ELECTRICAL ENGINEERS
1100 17th Street, Suite #1001 Modesto, CA 95354
PHONE: 209 . 576 . 4602
HTTP://WWW.PEZZONI.COM

PEZZONI ENGINEERING, INC. © Copyrighted 2020

Stamp

Printing	Date
95% CONSTRUCTION DOCUMENTS	06.25.2021
PERMIT SET	08.16.2021
PERMIT SET - DSA V2	12.15.2021
PERMIT SET - SFM	12.21.2021

Revisions and Description	Date

Scale
AS NOTED

Drawn by
CCM / KP

EHDD Job Number
20020

Sheet Title
NETWORK CABLING SCHEDULE

Sheet Number
E0.3 V3

8/6/2021 5:44:22 PM

PLAN NOTES

1. (E) CAMPUS MDF AT LIBRARY BLDG TELE ROOM–TERMINATE (N) FIBER OPTIC CABLE PER RISER DIAGRAM.
2. (E) PATHWAY W/(N) LIBRARY MDF FIBER OPTIC CABLE.
3. (E) CAMPUS BACKUP MDF AT SCIENCE BLDG TELE ROOM–TERMINATE (N) FIBER OPTIC CABLE PER RISER DIAGRAM.
4. (E) PATHWAY W/(N) SCIENCE MDF FIBER OPTIC CABLE.
5. (E) 12kV SWITCHGEAR NEAR (E) VAULT –DEMO (E) LOOP FEEDER BEWTEEN (E) SWITCHES & INSTALL (N) LOOP FEEDER PER THE SINGLE LINE DIAGRAM
6. (E) 12kV PATHWAY –DEMO (E) FEEDER & INSTALL (N) AS SHOWN
7. (E) FACP IN (E) ADJACENT BUILDING –DEMO NETWORK LOOP BETWEEN THESE 2 (E) LOCATIONS & INSTALL (N) COPPER NETWORK LOOP WHICH INCORPORATES THIS PROJECT –SEE FIRE ALARM RISER DIAGRAM(E) TELECOMM VAULT (FACP/VOICE).

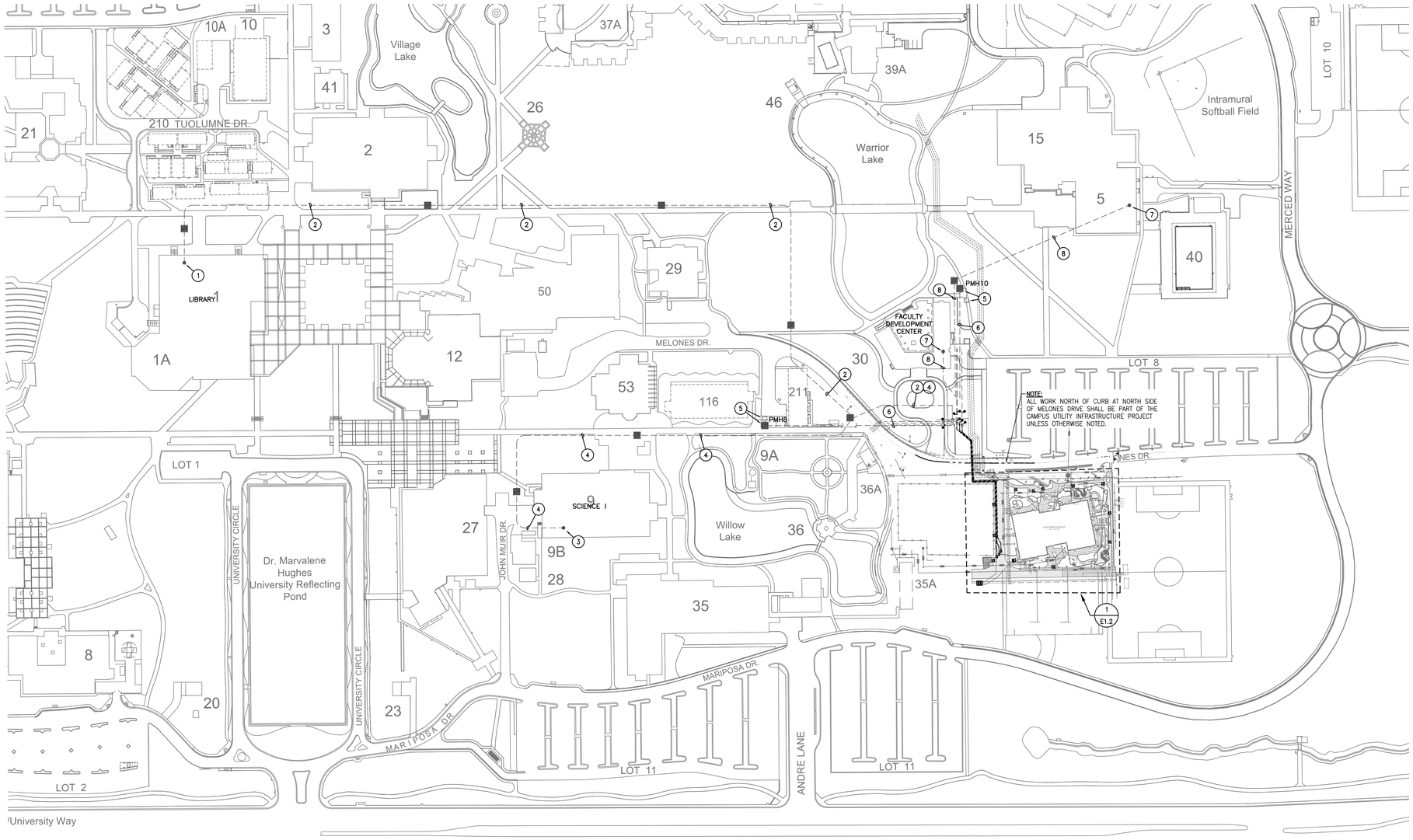

1 OVERALL ELECTRICAL COMPUS PLAN
SCALE: 1"=100'-0"

SCALE IN FEET
0 50 100 200

Division of the State Ar

APPROVED
DIV. OF THE STATE ARCHITECT
APP: 02-119316 INC:
REVIEWED FOR
SS☐ FLS☐ ACS☑
DATE: 03/24/2022

Office of the State Fire Marshal

OFFICE OF THE STATE FIRE MARSHAL
APPROVED FIRE AND PANIC ONLY
03/14/22
21-0498
Approval of this plan does not authorize or approve any omission or deviation from applicable regulations. Final approval is subject to field inspection. One set of approved plans shall be available on the project site at all times.

CSUS CHILD DEVELOPMENT CENTER

CALIFORNIA STATE UNIVERSITY, STANISLAUS
ONE UNIVERSITY CIRCLE
TURLOCK, CA 95382

ehdd.

PIER 1, BAY 2
THE EMBARCADERO
SAN FRANCISCO, CA 94111

INFO@EHDD.COM
+1 415-285-9193

Consultant

PEZZONI ENGINEERING, INC.
CONSULTING ELECTRICAL ENGINEERS
1150 9th Street, Suite #1415 Modesto, CA 95354
PHONE: 209 . 554 . 4602
HTTP://WWW.PEZENGR.COM

PEZZONI ENGINEERING, INC. © Copyrighted 2020

Stamp

REGISTERED PROFESSIONAL ENGINEER
KEVIN L. PEZZONI
NO. 16769
EXP. 12/23
ELECTRICAL
STATE OF CALIFORNIA

Printing	Date
95% CONSTRUCTION DOCUMENTS	06.25.2021
PERMIT SET	08.16.2021
PERMIT SET - DSA V2	12.15.2021
PERMIT SET - SFM	12.21.2021

Revisions and Description	Date

Scale
AS NOTED

Drawn by
CCM / KP

EHDD Job Number
20020

Sheet Title
OVERALL ELECTRICAL COMPUS PLAN

Sheet Number
E1.1 V3

12/15/21 11:44:17 AM F:\20\546 CSUS CHILD DEVELOPMENT CENTER\ENGR\SHEETS\546_E1.1 OVERALL ELECTRICAL COMPUS PLAN.DWG cmendez

8/6/2021 5:44:22 PM

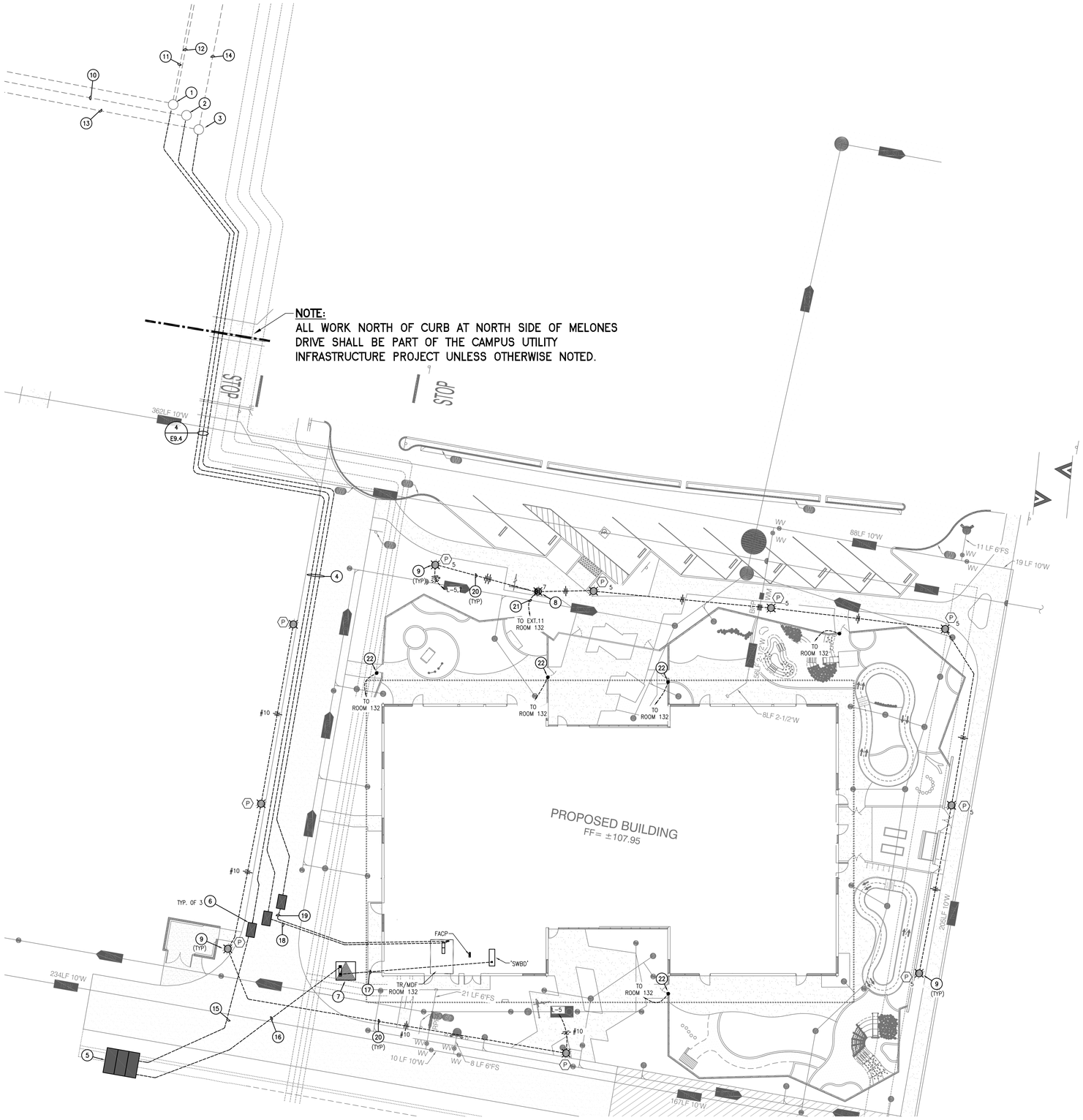

1 ELECTRICAL PROJECT SITE PLAN
SCALE: 1/16"=1'-0"

SCALE IN INCHES
0 1/32" 1/16" 1/8"

(#) PLAN NOTES

1. (E) SIGNAL VAULT FOR CAMPUS NETWORK FIRE ALARM & ANALOG LINES (E) CAMPUS –STUB (N) 2–4"C TO (N) VAULT SHOWN
2. (E) TELECOMM VAULT FOR CAMPUS DATA COMM NETWORK –STUB (N) 4–4"C TO (N) VAULT SHOWN
3. (E) 12kV ELECTRIC VAULT –STUB (N) 3–4"C TO (N) VAULT SHOWN
4. (N) ELECTRICAL DUCT BANK W/
   (2) 4"C FOR ANALOG & FIRE ALARM NETWORKING CABLING
   (4) 4"C FOR CAMPUS IT NEWTORKING INFRASTRUCTURE
   (3) 4"C FOR 12kV ELECTRIC POWER
5. (N) PAD MOUNTED 12kV NETWORK SWITCH – SEE DETAIL 1/E9.1.
6. (N) 3X5 VAULTS –TYPICAL, SEE DETAIL 5/E9.4.
7. (N) PAD MOUNTED XFMER W/TID U–2056–1 STYLE PAD, SEE DETAIL 6/E9.4.
8. (N) CAMPUS BLUE LIGHT W/1 1/4"C TO MDF – SEE DETAIL 3/E9.2.
9. (N) PEDESTRIAN LIGHT POLE –SEE FIXTURE SCHEDULE, AND DETAIL 4/E9.2.
10. (E) PATHWAY W/(N) FIBER OPTIC CABLING FROM "SCIENCE I" & LIBRARY –SEE RISER DIAGRAM.
11. (E) PATHWAY W/FIRE ALARM NETWORK CABLING FROM "FACULTY DEVELOPMENT BUILDING" –DEMO (E) NETWORK LOOP TO FIELDHOUSE & CONNECT (N) BLDG SHOWN –SEE FIRE ALARM DRAWINGS FOR ADDITIONAL REQUIREMENTS.
12. (E) PATHWAY W/FIRE ALARM NETWORK CABLING FROM "FIELDHOUSE" –DEMO (E) NETWORK LOOP TO FIELDHOUSE & CONNECT (N) BLDG SHOWN –SEE FIRE ALARM DRAWINGS FOR ADDITIONAL REQUIREMENTS.
13. (E) PATHWAY W/12kV LOOP FEEDER FROM PMH#8 –DEMO (E) FEEDER & INSTALL (N) PER THE SINGLE LINE DIAGRAM.
14. (E) PATHWAY W/12kV LOOP FEEDER FROM PMH#10–DEMO (E) FEEDER & INSTALL (N) PER THE SINGLE LINE DIAGRAM.
15. (N) (4) 4"C FOR 12kV ELECTRIC POWER.
16. (N) (2) 4"C FOR 12kV ELECTRIC POWER.
17. (N) 208V FEEDER FROM XFMER TO MAIN SWITCHBOARD –SEE SINGLE LINE DIAGRAM FOR EXACT REQUIREMENTS.
18. (N) (2) 4"C FOR ANALOG & FIRE ALARM NETWORKING.
19. (N) (2) 4"C FOR CAMPUS IT FIBER CABLE.
20. (N) 1"C W/LTG CKT(S) AS SHOWN.
21. (N) 1 1/2"C w/CABLING PER SCHEDULE.
22. (N) 1"C –STUB & CAP AT EDGE OF GATE STRIKE FRAME FOR (N)/(F) ACCESS CONTROL.

Division of the State Architect

APPROVED
DIV. OF THE STATE ARCHITECT
APP: 02-119316 INC:
REVIEWED FOR
SS☐ FLS☐ ACS☑
DATE: 03/24/2022

Office of the State Fire Marshal

OFFICE OF THE STATE FIRE MARSHAL
APPROVED FIRE AND PANIC ONLY
03/14/22
21-0498
Approval of this plan does not authorize or approve any omission or deviation from applicable requirements. Final approval is subject to field inspection. One set of approved plans shall be available on the project site at all times.

CSUS CHILD DEVELOPMENT CENTER

CALIFORNIA STATE UNIVERSITY, STANISLAUS
ONE UNIVERSITY CIRCLE
TURLOCK, CA 95382

ehdd.

PIER 1, BAY 2
THE EMBARCADERO
SAN FRANCISCO, CA 94111

INFO@EHDD.COM
+1 415-285-9193

Consultant

PEZZONI ENGINEERING, INC.
CONSULTING ELECTRICAL ENGINEERS
1550 LIT Third Suite #101 Modesto, CA 95354
PHONE: 209 . 554 . 4402
HTTP://WWW.PEZZNGR.COM

PEZZONI ENGINEERING, INC. © Copyrighted 2020

Stamp

Printing	Date
95% CONSTRUCTION DOCUMENTS	06.25.2021
PERMIT SET	08.16.2021
PERMIT SET - DSA V2	12.15.2021
PERMIT SET - SFM	12.21.2021

Revisions and Description	Date

Scale
AS NOTED

Drawn by
CCM / KP

EHDD Job Number
20020

Sheet Title
ELECTRICAL PROJECT SITE PLAN

Sheet Number
E1.2 V3

12/15/21 11:44:23 AM F:\20\546 CSUS CHILD DEVELOPMENT CENTER\ENGR\SHEETS\546_E1.2 ELECTRICAL PROJECT SITE PLAN.DWG cmendez

8/6/2021 5:44:22 PM
12/15/21 11:44:32 AM FA\20\546 CSUS CHILD DEVELOPMENT CENTER\ENGR\SHEETS\546_E2.1 FLOOR PLAN - POWER.DWG cmendez

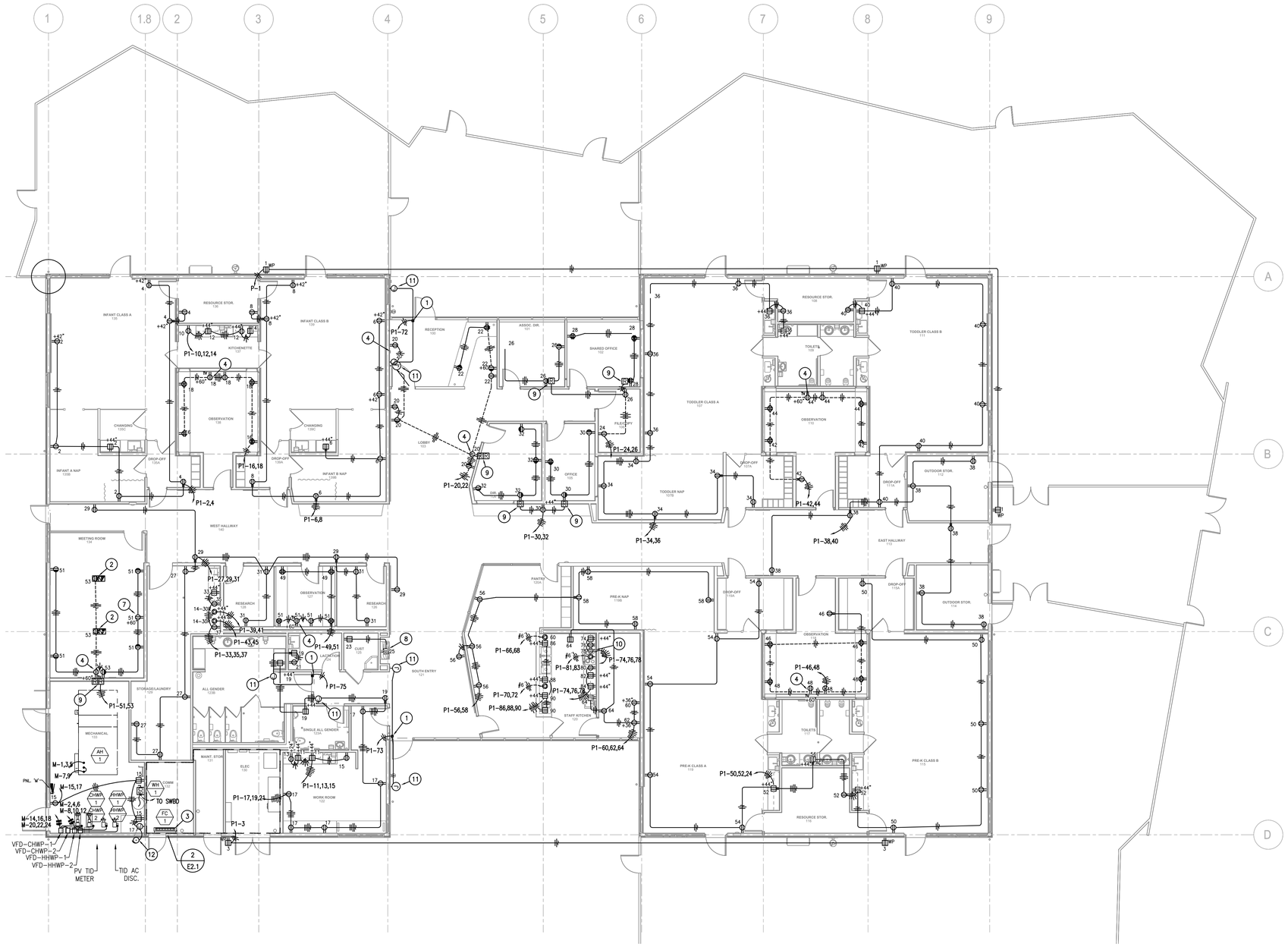

1 FLOOR PLAN – POWER

SCALE: 1/8"=1'-0"

SCALE IN INCHES
0 1/16" 1/8" 1/4"

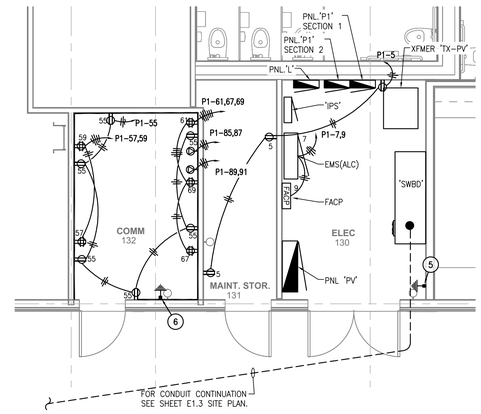

2 PLOT PLAN ELECTRICAL AND COMM RM.

SCALE: 1/4"=1'-0"

SCALE IN INCHES
0 1/8" 1/4" 1/2"

SHEET NOTES

1. REFER TO THE GENERAL NOTES ON SHEET E0.1 FOR ADDITIONAL REQUIREMENTS.
2. ALL RECEPTACLES, WHETHER INDICATED OR NOT, INSTALLED WITH-IN SIX FEET (6') OF A SINK SHALL BE EQUIPPED WITH A GROUND FAULT CIRCUIT INTERRUPTER AS REQUIRED BY THE CALIFORNIA ELECTRICAL CODE (C.E.C.) 210.8(B)(5).
3. RECEPTACLE OUTLET BOX, (WITH UNRESTRICTED CLEAR APPROACH), MOUNTING HEIGHT SHALL BE LOCATED NO MORE THAN 48" MEASURED FROM THE TOP OF THE OUTLET BOX NOR LESS THAN 15" MEASURED FROM THE BOTTOM OF THE OUTLET BOX TO THE LEVEL OF THE FINISHED FLOOR OR WORKING PLATFORM AS REQUIRED BY C.B.C SECTION 11B-308.1.2. RECEPTACLE OUTLET BOX LOCATED ABOVE COUNTER, WHERE ACCESS IS RESTRICTED, MOUNTING HEIGHT SHALL BE NO MORE THAN 3'-10" MEASURED FROM THE TOP OF THE OUTLET BOX FOR SIDE REACH OR 3'-8" MEASURED FROM THE TOP OF THE OUTLET BOX FOR FORWARD REACH TO THE LEVEL OF THE FINISHED FLOOR OR WORKING PLATFORM.
4. SUBSCRIPT "ACT" AT DEVICE SYMBOL AT DEVICE INDICATES MOUNTING ABOVE COUNTER HEIGHT. COORDINATE DEVICE MOUNTING HEIGHT WITH THE ARCHITECTURAL INTERIOR ELEVATIONS PRIOR TO ROUGH-IN.
5. CONTRACTOR IS RESPONSIBLE TO PROVIDE ALL JUNCTION BOXES, CONDUIT AND WIRING AS REQUIRED FOR A COMPLETE AND OPERABLE SYSTEM. MULTI-WIRE BRANCH CIRCUIT WIRING SHALL COMPLY WITH C.E.C 210.4(B).
6. ALL RECEPTACLES SHALL BE TAMPER RESISTANT.
7. THE EQUIPMENT DESIGNATED "N.I.E.S." IS EITHER OWNER FURNISHED/CONTRACTOR INSTALLED OR FURNISHED AND INSTALLED UNDER OTHER SECTIONS OF THIS PROJECT. THE ELECTRICAL CONTRACTOR IS RESPONSIBLE TO MAKE ELECTRICAL CONNECTION TO EQUIPMENT AS REQUIRED BY THE EQUIPMENT. PROVIDE ALL NECESSARY JUNCTION BOXES, CONDUIT AND WIRING AS REQUIRED FOR COMPLETE INSTALLATION. COORDINATE CONNECTION REQUIREMENTS WITH EQUIPMENT PRIOR TO THE EXECUTION OF WORK.
8. REFER TO THE MECHANICAL SCHEDULE ON SHEETS M0 FOR MECHANICAL EQUIPMENT REQUIREMENTS.
9. MECHANICAL DRAWINGS AND SPECIFICATIONS ARE SUBJECT TO LAST MINUTE CHANGES, THEREFORE THE ELECTRICAL CONTRACTOR SHALL BE RESPONSIBLE FOR FINAL COORDINATION BETWEEN ELECTRICAL AND MECHANICAL DRAWINGS. CONDUIT AND WIRING FOR THE LOW VOLTAGE CONTROLS SHALL BE PROVIDED UNDER DIVISION 23 SCOPE OF WORK.
10. ELECTRICAL REQUIREMENTS FOR MECHANICAL EQUIPMENT AS SPECIFIED ON THE MECHANICAL DRAWINGS MAY BE DIFFERENT BASED ON ACTUAL MECHANICAL EQUIPMENT SUBMITTALS. ELECTRICAL CONTRACTOR SHALL BE RESPONSIBLE FOR FINAL COORDINATION WITH THE ACTUAL MECHANICAL EQUIPMENT SUBMITTALS AND PROVIDE CONDUIT, WIRES, DISCONNECT AND CIRCUIT BREAKERS, SIZE AS REQUIRED, PER EQUIPMENT NAMEPLATE RATING.
11. DISCONNECT SWITCHES LOCATED OUTSIDE SHALL BE WEATHERPROOF.

(#) PLAN NOTES

1. (N) DOOR OPERATOR -COORDINATE W/DOOR HARDWARE VENDOR FOR ROUGH-IN REQUIREMENTS.
2. (N) FLOORBOX -WALKER RFB4 SERIES OR EQUAL.
3. CONNECT W/(N) 2 POLE DISCONNECT SWITCH W/3/4"C & 3#12AWG CONDUCTORS TO HP-1 AT ROOF
4. (N) 3 GANG MEDIA BOX FOR TV LOCATION -P&S TV3W-TVSS OR EQUAL -CENTER ON WALL & REVIEW FINAL ROUGH-IN LOCATION W/UNIVERSITY.
5. GROUNDING BUS BAR "BGB" -SEE SECTION 26 05 26.
6. GROUND BUS BAR "TMGB" -SEE 27 05 26.
7. (N) SMARTBOARD -VERFIY ROUGH-IN LOCATION & REQUIREMENTS W/UNIVERSITY.
8. (N) "DF-1" DRINKING FOUNTAIN -120V, 5A -COORDINATE ROUGH-IN W/MECHANICAL.
9. (N) PLUG LOAD RECEPTACLE CONTROLLER -CONNECT ONTO LTG CONTROL SYSTEM.
10. (N) MECHANICAL HOOD & LIGHT -COORDINATE ROUGH-IN HEIGHT W/ GENERAL CONTRACTOR.
11. (N) PUSH PAD LOCATION 1-GANG FLUSH +36" AFF W/3/4" TO DOOR OPERATOR.
12. (N) 120VAC GONG +9'-0"AFF MIN. -COORDINATE W/FIRE SPRINKLER CONTRACTOR FOR EXACT REQMTS.

Division of the State Ar

APPROVED
DIV. OF THE STATE ARCHITECT
APP: 02-119316 INC:
REVIEWED FOR
SS☐ FLS☐ ACS☑
DATE: 03/24/2022

Office of the State Fire Marshal

OFFICE OF THE STATE FIRE MARSHAL APPROVED FIRE AND PANIC ONLY

03/14/22
21-0498

Approval of this plan does not authorize or approve any omission or deviation from applicable requirements. Final approval is subject to field inspection. One set of approved plans shall be available on the project site at all times.

CSUS CHILD DEVELOPMENT CENTER

CALIFORNIA STATE UNIVERSITY, STANISLAUS
ONE UNIVERSITY CIRCLE
TURLOCK, CA 95382

ehdd.

PIER 1, BAY 2
THE EMBARCADERO
SAN FRANCISCO, CA 94111

INFO@EHDD.COM
+1 415-285-9193

Consultant

PEZZONI ENGINEERING, INC.
CONSULTING ELECTRICAL ENGINEERS
1100 17th Street, Suite #201 Modesto, CA 95354
PHONE: 209.754.4602
HTTP://WWW.PEZENGR.COM

PEZZONI ENGINEERING, INC. © Copyrighted 2020

Stamp

REGISTERED PROFESSIONAL ENGINEER
KEVIN L. PEZZONI
No. 16705
ELECTRICAL
STATE OF CALIFORNIA

Printing	Date
95% CONSTRUCTION DOCUMENTS	06.25.2021
PERMIT SET	08.16.2021
PERMIT SET - DSA V2	12.15.2021
PERMIT SET - SFM	12.21.2021

Revisions and Description	Date

Scale
AS NOTED

Drawn by
CCM / KP

EHDD Job Number
20020

Sheet Title
FLOOR PLAN - POWER

Sheet Number
E2.1 V3

8/6/2021 5:44:22 PM

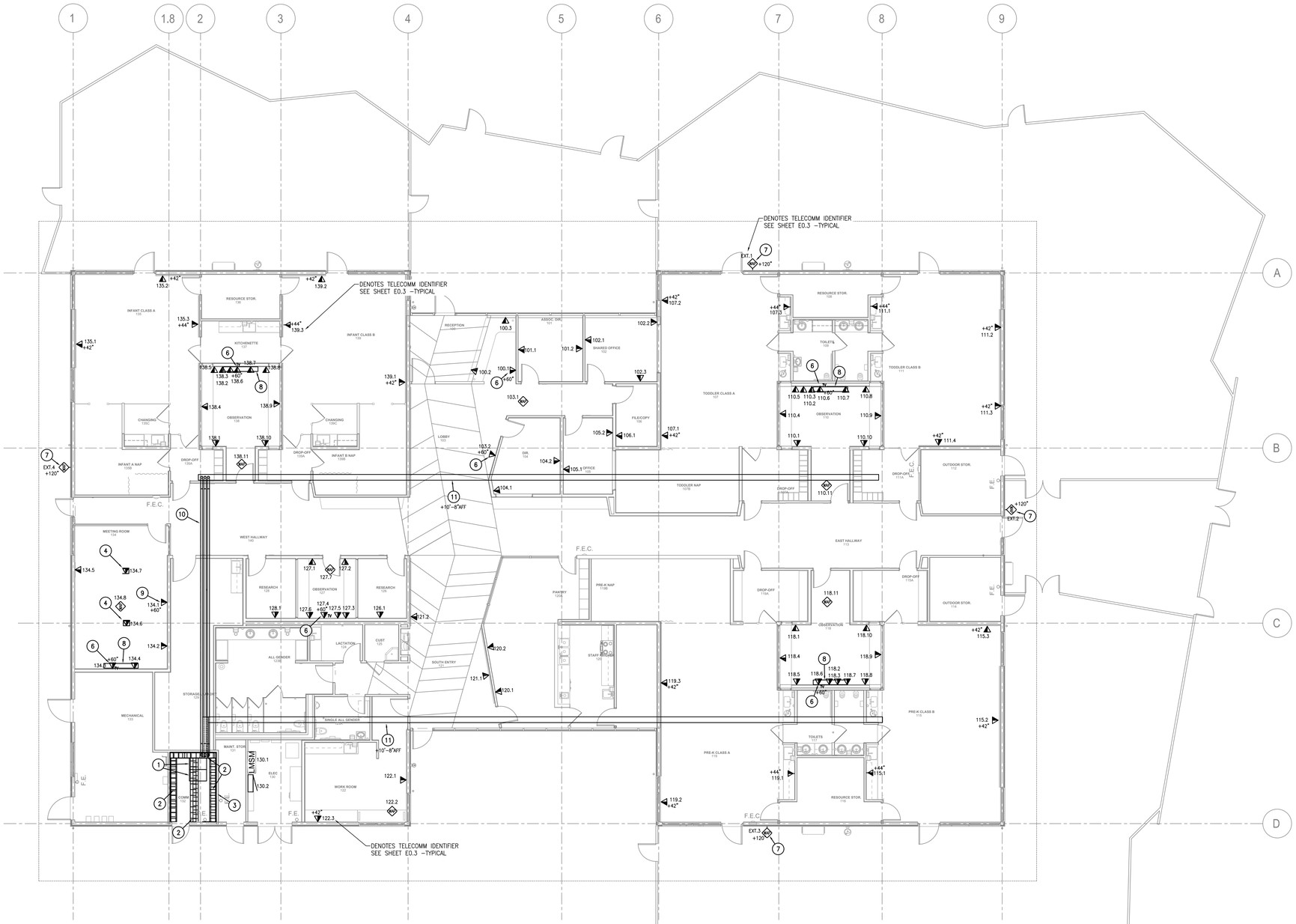

SHEET NOTES

1. REFER TO THE GENERAL NOTES ON SHEET E0.1 FOR ADDITIONAL REQUIREMENTS.
2. SUBSCRIPT "ACT" AT DEVICE SYMBOL AT DEVICE INDICATES MOUNTING ABOVE COUNTER HEIGHT. COORDINATE DEVICE MOUNTING HEIGHT WITH THE ARCHITECTURAL INTERIOR ELEVATIONS PRIOR TO ROUGH–IN.

(#) PLAN NOTES

1. (N) 4 POST RACK –SEE IT RISER DIAGRAM FOR REQUIREMENTS.
2. (N) 12" TELECOMM RUNWAY W/SUPPORTS.
3. (N) 3/4" F.R. PLYWOOD 96" HIGH MOUNTED AT +12"AFF CONTINUOUS ALONG WALLS SHOWN
4. (N) FLOORBOX –WALKER RFB4 SERIES OR EQUAL
5. (N) FLOORBOX –WALKER RFB2 SERIES OR EQUAL
6. (N) 3 GANG MEDIA BOX FOR TV LOCATION –P&S TV3W–TVSS OR EQUAL –CENTER ON WALL & REVIEW FINAL ROUGH–IN LOCATION W/UNIVERSITY
7. (N) OUTDOOR WAP –1 GANG FLUSH BOX
8. 3 BAY CREDENZA –MIDDLE ATLANTIC #C3K3D1HxxyyZPLzz (FORMICA AMBER MAPLE LAMINATE) W/(2) C3–SHELFKIT (FIXED SHLEF) & (1) C3TECHKIT4–SO (4RU SLIDE OUT RACK) –THE FOLLOWING EQUIPMENT SHALL BE PROVIDED:
   - BOGEN CORE 8X8 AUDIO PROCESSOR (BIN/8OUT) OR EQUAL
     - INPUT 1: CLASSROOM A CAMERA
     - INPUT 2: CLASSROOM B CAMERA
     - INPUT 3: PLAYGROUND AUDIO
     - INPUTS 4–8: (F) MICROPHONE/OTHER
     - OUTPUT 1: CLASSROOM A HEADPHONE A (RDL EZ–HDA4A 4–CHANNEL STEREO HEADPHONE DISTRIBUTION AMPLIFIER OR EQUAL)
     - OUTPUT 2: CLASSROOM A HEADPHONE A (RDL EZ–HDA4A 4–CHANNEL STEREO HEADPHONE DISTRIBUTION AMPLIFIER OR EQUAL)
     - OUTPUTS 3–8: FUTURE/OTHER
9. (N) SMARTBOARD –VERFIY ROUGH–IN LOCATION & REQUIREMENTS W/UNIVERSITY
10. (N) 3–4"C FOR LOW VOLTAGE CABLING –ROUTE ON TRAPEZE WITHIN 16" OF PLYWOOD DECK
11. (N) 12"X4" WIRE BASKET TRAY –ROUTE AT ELEVATION SHOWN & COORDINATE W/GENERAL CONTRACTOR

1 FLOOR PLAN – INFORMATION TECH. & AUDIO–VIDEO

SCALE: 1/8"=1'–0"

SCALE IN INCHES
0 1/16" 1/8" 1/4"

Division of the State Architect

APPROVED
DIV. OF THE STATE ARCHITECT
APP: 02-119316 INC:
REVIEWED FOR
SS☐ FLS☐ ACS☑
DATE: 03/24/2022

Office of the State Fire Marshal

OFFICE OF THE STATE FIRE MARSHAL
APPROVED FIRE AND PANIC ONLY
03/14/22
21-0498
Approval of this plan does not authorize or approve any omission or deviation from applicable regulations. Final approval is subject to field inspection. One set of approved plans shall be available on the project site at all times.

CSUS CHILD DEVELOPMENT CENTER

CALIFORNIA STATE
UNIVERSITY, STANISLAUS
ONE UNIVERSITY CIRCLE
TURLOCK, CA 95382

ehdd.

PIER 1, BAY 2
THE EMBARCADERO
SAN FRANCISCO, CA 94111

INFO@EHDD.COM
+1 415-285-9193

Consultant

PEZZONI ENGINEERING, INC.
CONSULTING ELECTRICAL ENGINEERS
1101 5th Street, Suite #101 Modesto, CA 95354
PHONE: 209. 554. 4602
HTTP://WWW.PEZENGR.COM

PEZZONI ENGINEERING, INC. © Copyrighted 2020

Stamp

REGISTERED PROFESSIONAL ENGINEER
KEVIN L. PEZZONI
No. 17078
ELECTRICAL
STATE OF CALIFORNIA

Printing	Date
95% CONSTRUCTION DOCUMENTS	06.25.2021
PERMIT SET	08.16.2021
PERMIT SET - DSA V2	12.15.2021
PERMIT SET - SFM	12.21.2021

Revisions and Description	Date

Scale
AS NOTED

Drawn by
CCM / KP

EHDD Job Number
20020

Sheet Title
FLOOR PLAN - INFORMATION TECH. & AUDIO-VIDEO

Sheet Number
E3.1 V3

12/15/21 11:44:37 AM F:\20\546 CSUS CHILD DEVELOPMENT CENTER\ENGR\SHEETS\546_E3.1 FLOOR PLAN –IT & AV.DWG cmendez

8/6/2021 5:44:22 PM

12/15/21 11:44:42 AM F:\20\546 CSUS CHILD DEVELOPMENT CENTER\ENGR\SHEETS\546_E3.2 FLOOR PLAN -ACCESS CONTROL & CCTV.DWG cmendez

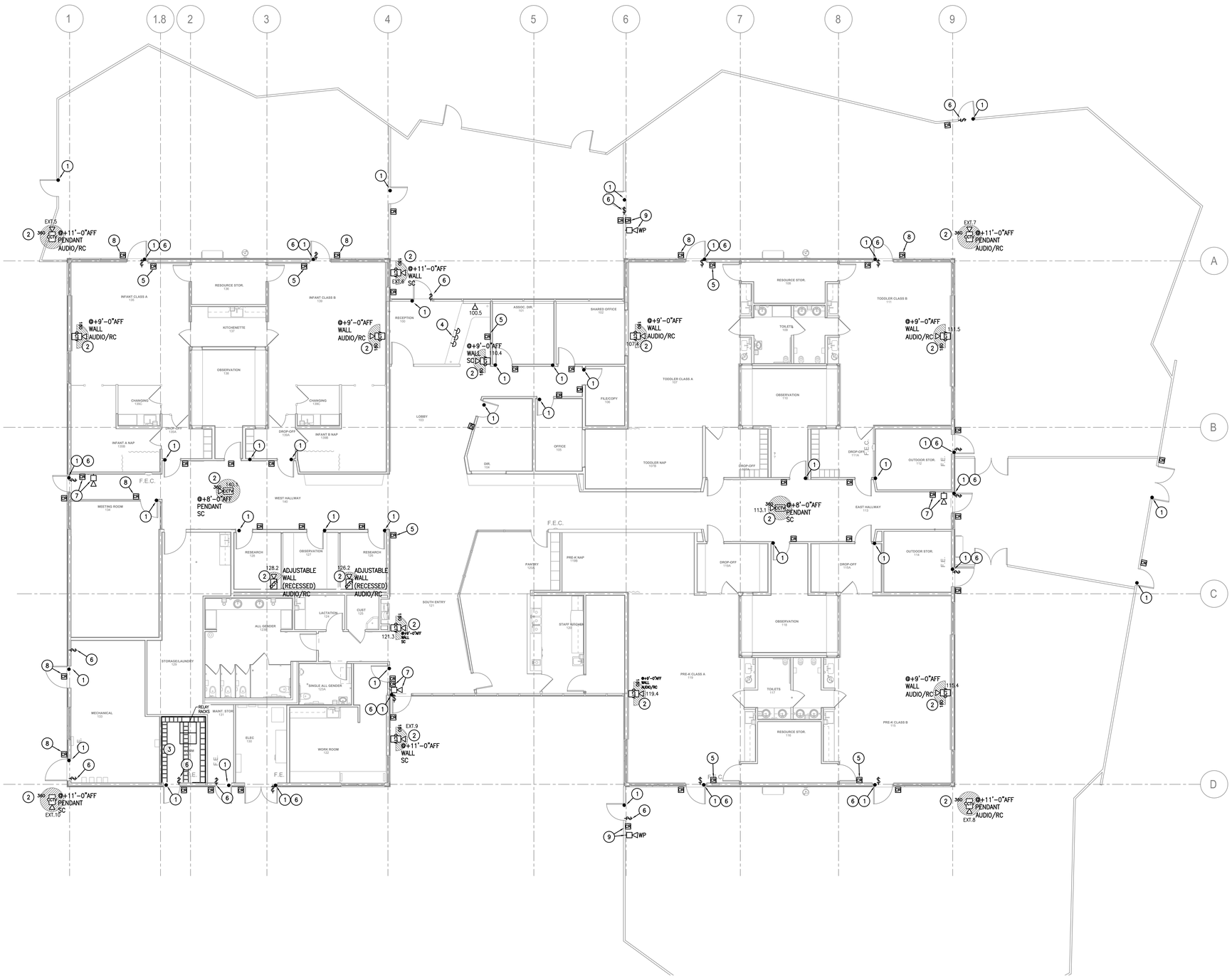

1 FLOOR PLAN –ACCESS CONTROL & CCTV

SCALE: 1/8"=1'-0"

N

SCALE IN INCHES
0 1/16" 1/8" 1/4"

SHEET NOTES

1. REFER TO THE GENERAL NOTES ON SHEET E0.1 FOR ADDITIONAL REQUIREMENTS.
2. SUBSCRIPT "ACT" AT DEVICE SYMBOL AT DEVICE INDICATES MOUNTING ABOVE COUNTER HEIGHT. COORDINATE DEVICE MOUNTING HEIGHT WITH THE ARCHITECTURAL INTERIOR ELEVATIONS PRIOR TO ROUGH-IN.
3. CCTV CAMERA INFORMATION IS AS FOLLOWS:
   1ST LINE = CAMERA MOUNTING HEIGHT
   2ND LINE = MOUNTING STYLE (WALL/PENDANT/CEILING/ETC.)
   3RD LINE = DENOTES FEATURES:
   AUDIO = AUDIO ENABLED CAMERA/MIC. LOCATION
   RC = RESEARCH ONLY CAMERA
   SC = SECURITY/CAMPUS POLICE CAMERA
4. REFER TO SHEET G0.8 REGARDING LOCKDOWN NARRATIVE AND SYSTEM OPERATION.

(#) PLAN NOTES

1. (N) ACCESS CONTROL DOOR –ELECTRIC LOCK & CARD READER –PAXTON
2. (N) IP BASED CCTV CAMERA. SEE LEGEND IN SHEET NOTES ABOVE.
3. PAXTON CONTROLLERS LOCATED ON WEST WALL OF TELE ROOM –SEE ELEVATION VIEW
4. FRONT DESK PANIC BUTTONS LOCATION VIA 100.5 (COORDINATE FINAL LOCATION IN CASEWORK W/UNIVERSITY STAFF) FOR THE FOLLOWING: (1) BUTTON TO CAMPUS SECURITY.
5. LOCKDOWN ENGAGE/RELEASE CARD READER –PROVIDE PLACARD ABOVE READER WHICH READS "LOCKDOWN".
6. PROVIDE DOOR SWITCH MAGNET AT FRAME PER DETAIL 4/E9.3.
7. CARD READER REXIT & LOCAL SOUNDER (SYSTEM SENSOR #P2WL 12/24VDC, WHITE) +96"AFF
8. MOUNT CARD READER ON MULLION & ROUTE WITHIN FRAME TO ATTIC SPACE.
9. CARD READER REXIT & LOCAL SOUNDER (SYSTEM SENSOR #HRK 12/24VDC, WP) +38"AFF.

Division of the State Architect

APPROVED
DIV. OF THE STATE ARCHITECT
APP: 02-119316 INC:
REVIEWED FOR
SS☐ FLS☐ ACS☑
DATE: 03/24/2022

Office of the State Fire Marshal

OFFICE OF THE STATE FIRE MARSHAL APPROVED FIRE AND PANIC ONLY

03/14/22
21-0498

Approval of this plan does not authorize or approve any omission or deviation from applicable regulations. Final approval is subject to field inspection. One set of approved plans shall be available on the project site at all times.

CSUS CHILD DEVELOPMENT CENTER

CALIFORNIA STATE UNIVERSITY, STANISLAUS
ONE UNIVERSITY CIRCLE
TURLOCK, CA 95382

ehdd.

PIER 1, BAY 2
THE EMBARCADERO
SAN FRANCISCO, CA 94111

INFO@EHDD.COM
+1 415-285-9193

Consultant

PEZZONI ENGINEERING, INC.
CONSULTING ELECTRICAL ENGINEERS
1100 4TH Street, Suite #300 Modesto, CA 95354
PHONE: 209.754.4602
HTTP://WWW.PEZZENGR.COM

PEZZONI ENGINEERING, INC. © Copyrighted 2020

Stamp

REGISTERED PROFESSIONAL ENGINEER
ELVIN L. PEZZONI
No. 16703
04-30-23
ELECTRICAL
STATE OF CALIFORNIA

Printing	Date
95% CONSTRUCTION DOCUMENTS	06.25.2021
PERMIT SET	08.16.2021
PERMIT SET - DSA V2	12.15.2021
PERMIT SET - SFM	12.21.2021

Revisions and Description	Date

Scale
AS NOTED

Drawn by
CCM / KP

EHDD Job Number
20020

Sheet Title
FLOOR PLAN -ACCESS CONTROL & CCTV

Sheet Number
E3.2 V3

8/6/2021 5:44:22 PM

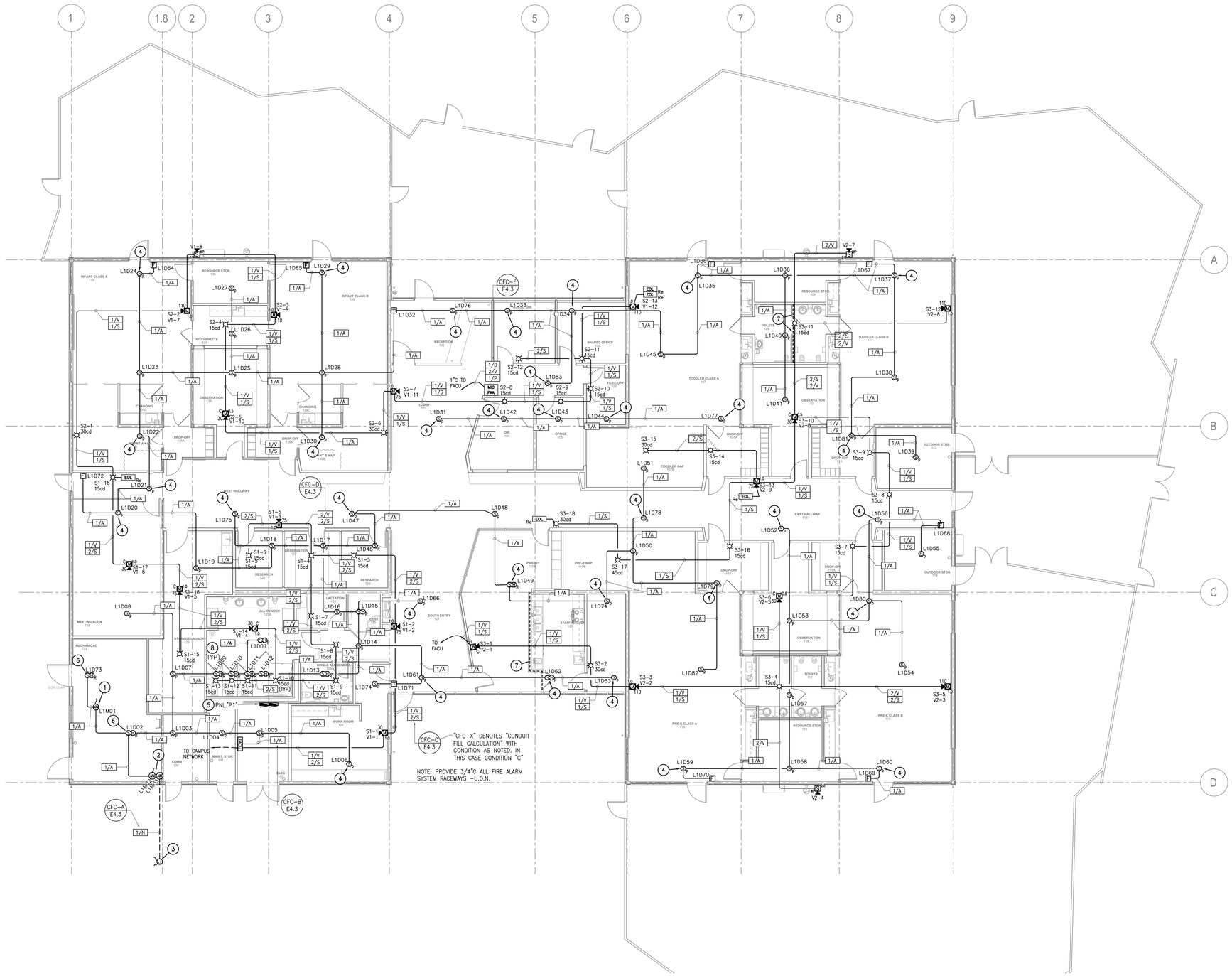

1 FLOOR PLAN – FIRE ALARM

SCALE: 1/8"=1'-0"

SCALE IN INCHES
0 1/16" 1/8" 1/4"

FIRE ALARM NOTES

1. THE FIRE ALARM SYSTEM SHALL CONFORM TO ARTICLE 760 OF THE CALIFORNIA ELECTRICAL CODE. AIR HANDLING UNIT SHUTDOWN SHALL COMPLY AS FOLLOWS:

   a. ***"COMPLIANCE WITH THE 2019 CMC REQUIREMENT §608 (PREVIOUSLY §609) SHALL BE MET FOR AIR HANDLING UNITS (AHU) / AIR MOVING SYSTEM GLOBAL / AGGREGATE SIMULTANEOUS SMOKE SHUTDOWN OF AREA SERVED PER CSFM INTERPRETATION # 02-024 & 08-065 UPON ACTIVATION OF ANY SINGLE DUCT SMOKE DETECTOR"

   AND

   b. ***"ALL AHU / HVAC UNIT DUCT-SMOKE DETECTORS SHALL BE CONNECTED TO BUILDING FIRE ALARM PANEL TO INITIATE A SUPERVISORY SIGNAL UPON ACTIVATION, BE INTERCONNECTED AND SHALL SHUT DOWN ALL UNITS SIMULTANEOUSLY UPON ACTIVATION OF ANY ONE SINGLE DETECTOR"

   AND

   c. ***"ALL AHU / HVAC UNIT DUCT-SMOKE DETECTORS SHALL BE TESTED BY CALIBRATED MANOMETER PROVIDED BY THE INSTALLING CONTRACTOR TO INSURE AIR VOLUME AND VELOCITIES ARE WITHIN THE TOLERANCE SPECIFICATIONS OF THE RATINGS REQUIRED BY THE MANUFACTURER'S DATA ON EACH DUCT-SMOKE DETECTOR INSTALLED WITHIN THE UNIT / DUCTWORK"

   Per CSFM, 2019 CFC §907.3.1, 2016 NFPA 72 §17.7.4 & 2019 CMC §608.

2. UPON COMPLETION OF THE INSTALLATION OF THE FIRE ALARM SYSTEM, A SATISFACTORY TEST OF THE ENTIRE SYSTEM SHALL BE PERFORMED IN THE PRESENCE OF THE OSFM, INSPECTOR OF RECORD, & LOCAL FIRE AUTHORITY.
3. FIRE ALARM PATHWAYS SHALL BE SURVIVABILITY LEVEL 1 FOR A SPRINKLED BUILDING WITH "B" & "E" OCCUPANCIES WITH TYPE "VB" CONSTRUCTION.
4. ON FACTORY PROVIDED BACK BOXES, NO ENLARGEMENTS TO THE STANDARD KNOCKOUTS SHALL BE MADE. NOR MAY THE INSTALLER ATTACH CONDUIT TO A NON-FACTORY PROVIDED KNOCKOUT WITHOUT THE EXPRESS WRITTEN CONSENT OF THE MANUFACTURER.
5. ALL FIRE ALARM DATA COMMUNICATIONS, AND INITIATING CIRCUITS SHALL BE INSTALLED UTILIZING SOLID COPPER CONDUCTORS OF A SIZE AS PER THE SPECIFICATIONS.
6. ALL FIRE ALARM CIRCUITS ARE CONTINUOUS FROM DEVICE TO DEVICE, SPLICES ARE NOT ALLOWED UNLESS IN COVERED JUNCTION BOXES ON APPROVED TERMINAL BLOCKS.
7. CABLING REQUIREMENTS:
   A. ALL CONDUCTORS SHALL BE SOLID COPPER; STRANDED CONDUCTORS ARE PROHIBITED.
   B. ALL CONDUCTORS SHALL BE BRADY OR EQUALLY LABELED.
   C. CALL CONDUCTORS SHALL BE INSTALLED IN CONDUIT –NO OPEN WIRING.
8. THE GENERAL SPACING FOR SPOT SMOKE DETECTORS SHALL COMPLY WITH NFPA 72-17.3.2.3.1 WHICH IS 30 FEET ON CENTER MAXIMUM AND 21 FEET THROUGHOUT A ROOM/SPACE. SPOT HEAT DETECTORS SPACING AND CRITERIA FOR THIS PROJECT WILL BE THE SAME AS FOR SPOT SMOKE DETECTORS.
9. (NOT USED)
10. FIRE ALARM CONTRACTOR SHALL PROVIDE A RECORD OF COMPLETION AFTER COMPLETION OF OPERATIONAL ACCEPTANCE TESTS.
11. POWER CIRCUITS SHALL BE ON A DEDICATED BRANCH CIRCUIT WITH RED MARKING, WITH LOCK OUT DEVICE, AND IDENTIFIED AS "FIRE ALARM CIRCUIT CONTROL".
12. VISUAL DEVICES SHALL FLASH AT A RATE NOT EXCEEDING TWO FLASHES PER SECOND AND NOT LESS THAN ONE FLASH PER SECOND. AUDIBLE DEVICES SHALL COMPLY WITH NFPA 72-18.4.1.2 TO NOT EXCEED 110dBA AND CONFORM TO PUBLIC MODE REQUIREMENTS. AUDIBLE LEVELS SHALL BE +15dBA ABOVE AVERAGE AMBIENT SOUND PER NFPA72-18.4.3.1. IT IS ASSUMED AVERAGE AMBENT SOUND TO BE 60dB THROUGHOUT.
13. (NOT USED)
14. FINAL FIRE ALARM TESTS SHALL BE CONDUCTED WITH OSFM & UNIVERSITY INSPECTOR OF RECORD PRESENT. THE LOCAL FIRE AUTHORITY SHALL BE NOTIFIED OF THE DATE AND TIME OF THE FINAL TESTING AND SHALL ASSIST/WITNESS SUCH TESTING WE ABLE.
15. THE AUTOMATIC FIRE ALARM SYSTEM SHALL TRANSMIT ALARM, SUPERVISORY, AND TROUBLE SIGNALS TO AN APPROVED SUPERVISING STATION AS REQUIRED BY CFC 907.6.6. THE SUPERVISORY STATION SHALL BE LISTED AS EITHER UUFX OR UUUS BY UL OR SHALL MEET THE REQUIREMENTS OF FACTORY MUTUAL RESEARCH APPROVAL STANDARD 3011.
16. INSTALLATION OF THE SYSTEMS SHALL NOT BE STARTED UNTIL DETAILED DESIGN DOCUMENTS AND SPECIFICATION, INCLUDING STATE FIRE MARSHAL LISTING NUMBERS FOR EACH COMPONENT OF THE SYSTEM, HAS BEEN APPROVED BY OSFM.
17. ANY DISCREPANCIES BETWEEN THE DRAWINGS AND THE CODE OR RECOGNIZED STANDARDS SHALL BE BROUGHT TO THE ATTENTION OF THE PROJECT'S ARCHITECT/ENGINEER.
18. ALL PENETRATIONS THROUGH RATED ASSEMBLIES REQUIRING OPENING PROTECTION SHALL BE PROVIDED WITH A PENETRATION FIRE STOP SYSTEM PER CBC CHAPTER 7. APPROVED TYPES OF MATERIALS SHALL BE IDENTIFIED WITHIN THE PROJECT SPECIFICATIONS WITHIN THE FIRE ALARM SECTION.
19. (NOT USED)
20. THE CONTRACTOR SHALL ADJUST/INSTALL ALL DEVICES TO MAXIMIZE PERFORMANCE AND TO MINIMIZE FALSE ALARMS.
21. UNDERGROUND AND EXTERIOR CONDUITS TO HAVE WATER TIGHT FITTINGS AND WIRE TO BE APPROVED FOR WET LOCATIONS.
22. ALL FIRE ALARM WIRING SHALL BE FPL OR FPLP (FIRE POWER LIMITED OR FIRE POWER LIMITED PLENUM) AS REQUIRED FOR APPLICATION. WIRING IN CONDUIT ABOVE GROUND MAY BE TYPE THHN OR THWN.
23. PER CEC STANDARDS, ALL WIRING IS TO BE PULLED THROUGH EACH JUNCTION BOX AND CONNECTED DIRECTLY TO EACH FIRE DEVICE. DO NOT SPLICE THE WIRE. ALL BOXES TO BE SIZED PER CEC.
24. SMOKE DETECTORS SHALL NOT BE ANY CLOSER THAN 1' FROM FIRE SPRINKLERS OR 3' FROM ANY SUPPLY DIFFUSER. IN AREA OF CONSTRUCTION OR POSSIBLE DAMAGE / CONTAMINATION ON NEWLY INSTALLED FIRE ALARM, DEVICES SHALL BE COVERED UNTIL THAT AREA IS READY TO BE TURNED OVER TO THE OWNER.
25. ALL FIRE ALARM CIRCUITS SHALL BE IN CONDUIT, SURFACE RACEWAY OR OPEN RUN ABOVE CEILINGS, UNDER FLOORS AND IN WALLS IN A NEAT AND PROTECTED MANOR AS INDICATED ON DESIGN DOCUMENTS. EXPOSED CIRCUITS ARE ONLY PERMITTED WHEN NOTED AS EXPOSED ON DESIGN DOCUMENTS.
26. FIRE ALARM PANEL, REMOTES, AND COMPONENTS SHALL BE SECURED TO MOUNTING SURFACES PER MANUFACTURERS SPECIFICATIONS. NO SINGLE DEVICE SHALL EXCEED 20 LBS. WITHOUT SPECIAL MOUNTING DETAILS.
27. THE INSTALLING CONTRACTOR SHALL PROVIDE A COMPLETED 'SYSTEM RECORD OF COMPLETION' PER NFPA 72, FIGURE 7.8.2.
28. FIRE ALARM CONTROL PANELS AND REMOTE ANNUNCIATORS SHALL BE INSTALLED WITH THEIR BOTTOMS MOUNTED AT 48" ABOVE THE FINISHED FLOOR.
29. MICROPHONES ASSOCIATED WITH EMERGENCY VOICE ALARM COMMUNICATION SYSTEMS (EVAC) SHALL BE ACCESSIBLE FOR USE, INSTALLED IN COMPLIANCE WITH CBC SECTIONS 1152-305 AND 1152-308.
30. THE INSTALLING CONTRACTOR SHALL PROVIDE SYSTEM PROGRAMMING FOR SUPERVISORY MONITORING PER CBC SECTION 907.6.6.
31. SUPERVISORY MONITORING SHALL BE TESTED AND VERIFIED AS SENDING CORRECT SIGNALS IN CONJUNCTION WITH FINAL ACCEPTANCE TEST.
32. OWNER SHALL BE RESPONSIBLE FOR ESTABLISHING A FIRE SYSTEM MONITORING CONTRACT OR PROVISIONS.

(##) PLAN NOTES

1. COORDINATE REMOTE RELAY INSTALLATION & SHUTDOWN W/MECHNANICAL.
2. COORDINATE CONNECTION OF FIRE RISER TAMPER & FLOW SWITCHES
3. COORDINATE DOUBLE CHECK TAMPER SWITCH –SEE CIVIL FOR EXACT LOCATION –INSTALL (N) 1"C AS SHOWN.
4. LOCATE DETECTOR WITHIN 36" OF CEILING PEAK PER NFPA72.
5. REFER TO FIRE ALARM RISER DIAGRAM FOR MARKINGS & IDENTIFICATION OF FACU 120V POWER SOURCE IN ACCORDANCE TO NFPA 72, 10.6.5.2.
6. LOCATE DETECTOR AT ROOF SHEATHING & AWAY FROM TRUSS OR ANY 2X/4X STRUCTURAL MEMBERS
7. INDICATED WALL IS HALF HEIGHT
8. RESTROOM STALL PARTITIONS ARE ALL FULL HEIGHT

Division of the State Architect

APPROVED
DIV. OF THE STATE ARCHITECT
APP: 02-119316 INC:
REVIEWED FOR
SS☐ FLS☐ ACS☑
DATE: 03/24/2022

Office of the State Fire Marshal

OFFICE OF THE STATE FIRE MARSHAL APPROVED FIRE AND PANIC ONLY

03/14/22
21-0498

Approval of this plan does not authorize or approve any omission or deviation from applicable requirements. Final approval is subject to field inspection. One set of approved plans shall be available on the project site at all times.

CSUS CHILD DEVELOPMENT CENTER

CALIFORNIA STATE UNIVERSITY, STANISLAUS
ONE UNIVERSITY CIRCLE
TURLOCK, CA 95382

ehdd.

PIER 1, BAY 2
THE EMBARCADERO
SAN FRANCISCO, CA 94111

INFO@EHDD.COM
+1 415-285-9193

Consultant

PEZZONI ENGINEERING, INC.
CONSULTING ELECTRICAL ENGINEERS
1550 FIFTH AVENUE, SAN RAFAEL, CA 94901
PHONE: 209 . 554 . 4402
HTTP://WWW.PEZZNGR.COM

PEZZONI ENGINEERING, INC. © Copyrighted 2020

Stamp

REGISTERED PROFESSIONAL ENGINEER
KEVIN L. PEZZONI
No. 16208
07-31-2022
ELECTRICAL
STATE OF CALIFORNIA

Printing	Date
95% CONSTRUCTION DOCUMENTS	06.25.2021
PERMIT SET	08.16.2021
PERMIT SET - DSA V2	12.15.2021
PERMIT SET - SFM	12.21.2021

Revisions and Description	Date

Scale
AS NOTED

Drawn by
CCM / KP

EHDD Job Number
20020

Sheet Title
FLOOR PLAN - FIRE ALARM

Sheet Number
E4.1 V3

12/15/21 11:44:49 AM F:\20\546 CSUS CHILD DEVELOPMENT CENTER\ENGR\SHEETS\546_E4.1 FIRE ALARM PLAN.DWG cmendez

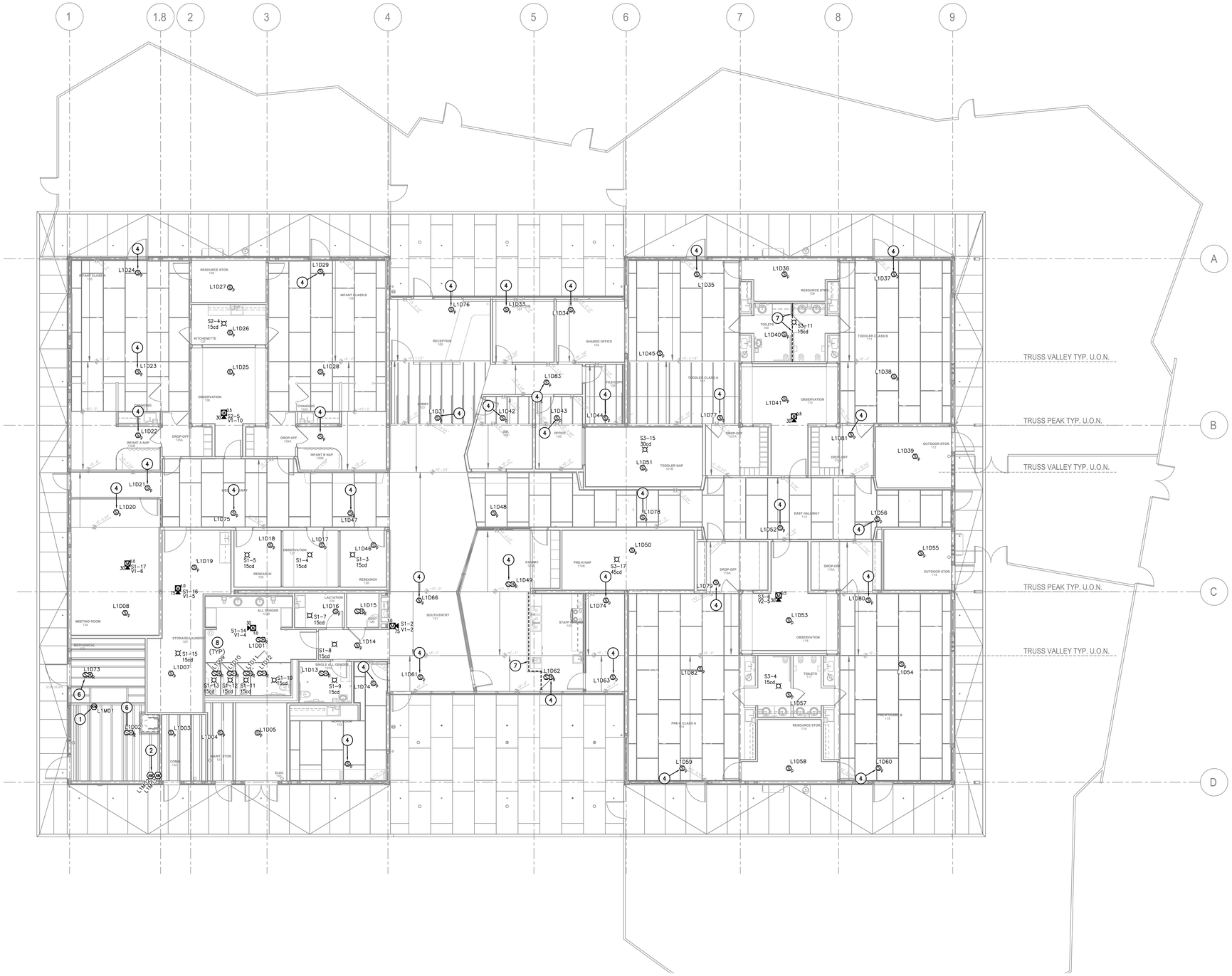

1 CEILING PLAN – FIRE ALARM
SCALE: 1/8"=1'-0"

SCALE IN INCHES
0 1/16" 1/8" 1/4"

PLAN NOTES

(NOTE: NOT ALL NOTES ARE USED ON THIS SHEET)

1. COORDINATE REMOTE RELAY INSTALLATION & SHUTDOWN W/MECHNANICAL.
2. COORDINATE CONNECTION OF FIRE RISER TAMPER & FLOW SWITCHES
3. COORDINATE DOUBLE CHECK TAMPER SWITCH –SEE CIVIL FOR EXACT LOCATION –INSTALL (N) 1"C AS SHOWN.
4. LOCATE DETECTOR WITHIN 36" OF CEILING PEAK PER NFPA72.
5. REFER TO FIRE ALARM RISER DIAGRAM FOR MARKINGS & IDENTIFICATION OF FACU 120V POWER SOURCE IN ACCORDANCE TO NFPA 72, 10.6.5.2.
6. LOCATE DETECTOR AT ROOF SHEATHING & AWAY FROM TRUSS OR ANY 2X/4X STRUCTURAL MEMBERS
7. INDICATED WALL IS HALF HEIGHT
8. RESTROOM STALL PARTITIONS ARE ALL FULL HEIGHT

Division of the State Ar

APPROVED
DIV. OF THE STATE ARCHITECT
APP: 02-119316 INC:
REVIEWED FOR
SS ☐ FLS ☐ ACS ☑
DATE: 03/24/2022

Office of the State Fire Marshal

OFFICE OF THE STATE FIRE MARSHAL
APPROVED FIRE AND PANIC ONLY
03/14/22
21-0498
Approval of this plan does not authorize or approve any omission or deviation from applicable regulations. Final approval is subject to field inspection. One set of approved plans shall be available on the project site at all times.

CSUS CHILD DEVELOPMENT CENTER

CALIFORNIA STATE UNIVERSITY, STANISLAUS
ONE UNIVERSITY CIRCLE
TURLOCK, CA 95382

ehdd.

PIER 1, BAY 2
THE EMBARCADERO
SAN FRANCISCO, CA 94111

INFO@EHDD.COM
+1 415-285-9193

Consultant

PEZZONI ENGINEERING, INC.
CONSULTING ELECTRICAL ENGINEERS
1150 9th Street, Suite #1415 Modesto, CA 95354
PHONE: 209 554 4602
HTTP://WWW.PEZENGR.COM

PEZZONI ENGINEERING, INC. © Copyrighted 2020

Stamp

REGISTERED PROFESSIONAL ENGINEER
KEVIN L. PEZZONI
NO. 16763
DIR. 09/23
ELECTRICAL
STATE OF CALIFORNIA

Printing	Date
95% CONSTRUCTION DOCUMENTS	06.25.2021
PERMIT SET	08.16.2021
PERMIT SET - DSA V2	12.15.2021
PERMIT SET - SFM	12.21.2021

Revisions and Description	Date

Scale
AS NOTED

Drawn by
CCM / KP

EHDD Job Number
20020

Sheet Title
CEILING PLAN - FIRE ALARM

Sheet Number
E4.1AV3

8/6/2021 5:44:22 PM
12/15/21 11:44:50 AM F:\20\546 CSUS CHILD DEVELOPMENT CENTER\ENGR\SHEETS\546_E4.1 FIRE ALARM PLAN.DWG cmendez

8/6/2021 5:44:22 PM
12/16/21 7:30:01 AM F:\20\546 CSUS CHILD DEVELOPMENT CENTER\ENGR\SHEETS\546_E4.1 FIRE ALARM PLAN.DWG cmendez

SYSTEM OPERATIONAL MATRIX

● = REQUIRED ACTION
BLANK MEANS NOT APPLICABLE

SYSTEM INPUTS	Control Unit Annunciation: ACTUATE COMMON ALARM SIGNAL INDICATOR	Notification: ACTUATE AUDIBLE SIGNAL AT PANEL	ACTUATE COMMON SUPERVISORY SIGNAL INDICATOR	ACTUATE COMMON TROUBLE SIGNAL INDICATOR	ANNUNCIATE ORIGIN AND DESCRIPTION OF SIGNAL ON LCD DISPLAY	RECORDING OF THE EVENT IN SYSTEM MEMORY	TRANSMIT ALARM SIGNAL TO SUPERVISING STATION	TRANSMIT SUPERVISORY SIGNAL TO SUPERVISING STATION	TRANSMIT TROUBLE SIGNAL TO SUPERVISING STATION	ACTUATE ALARM SIGNAL AT REMOTE ANNUNCIATOR	ACTUATE SUPERVISORY SIGNAL AT REMOTE ANNUNCIATOR	ACTUATE TROUBLE SIGNAL AT REMOTE ANNUNCIATOR	ACTUATE AUDIO/VISUAL ALARMS THROUGHOUT THE BUILDING	Required Fire Safety Control: SHUTDOWN ASSOCIATED AIR HANDLING EQUIPMENT	UNLOCK SECURITY DOORS (FAIL SAFE)
MANUAL PULL STATION	●	●			●	●	●			●			●		●
AREA SMOKE DETECTOR	●	●			●	●	●			●			●	●	●
AREA HEAT DETECTOR	●	●			●	●	●			●			●		●
SPRINKLER WATER FLOW SWITCH	●	●			●	●	●			●			●		●
VALVE TAMPER SWITCH		●	●		●	●		●			●				
FIRE ALARM SYSTEM AC POWER FAILURE		●		●	●	●			●			●			
FIRE ALARM SYSTEM LOW BATTERY		●		●	●	●			●			●			
OPEN CIRCUIT		●		●	●	●			●			●			
GROUND FAULT		●		●	●	●			●			●			
WIRE-TO-WIRE SHORT (SLC & NAC)		●		●	●	●			●			●			
WIRE-TO-WIRE SHORT (IDC) ALARM DEVICES	●	●			●	●	●			●	●				
WIRE-TO-WIRE SHORT (IDC) SUPERVISORY DEVICES		●		●	●	●			●			●			
COMMUNICATION CIRCUIT FAIL		●		●	●	●			●						

SLC DEVICE LABEL

L1M01
- SIGNALING LINE CIRCUIT (LOOP) NUMBER
- DEVICE NUMBER
- DEVICE TYPE: D = DETECTOR, M = MODULE

NAC DEVICE LABEL

S1-1
- NOTIFICATION APPLIANCE CIRCUIT NUMBER
- DEVICE NUMBER

CABLE DESIGNATIONS

1/A
- CABLE TYPE
- CABLE QTY

NOTE: REFER TO CABLE SCHEDULE FOR CABLE TYPE SPECIFICATIONS

WIRE/CABLE COLOR CODING

CIRCUIT TYPE	THHN/THWN WIRE +	THHN/THWN WIRE −	NON-CONDUIT CABLE JACKET	NON-CONDUIT CABLE +	NON-CONDUIT CABLE −
IDC	RED	BLACK	RED	RED	BLACK
SLC	N/A	N/A	RED	RED	BLACK
24V	RED	BLACK	RED	RED	BLACK
DOOR HOLDERS	PINK	PURPLE	RED	RED	BLACK
NAC (2-WIRE)					
HORN/ STROBE	WHITE	BLUE	RED	RED	BLACK
NAC (4-WIRE)					
HORN	WHITE	BLUE	RED	RED	BLACK
STROBE	YELLOW	BROWN		BROWN	BLUE

NOTE:
1: ALL WIRES AND CABLES SHALL BE TAPED INTO PAIRS AND TAGGED WITH THEIR RESPECTIVE CIRCUIT DESIGNATION AT EACH J-BOX, OUTLET BOX AND AT EACH END BY THE INSTALLING CONTRACTOR, PRIOR TO DEVICE TERMINATIONS.

2: NOT ALL CABLES ARE USED ON ALL JOBS.

MISCELLANEOUS SYMBOLS AND ABBREVIATIONS

SYM./ABBREV.	PART #	DESCRIPTION
J	(FBO)	JUNCTION BOX
STB	(FBO)	SIGNAL TERMINAL BACKBOARD
FTC	(FBO)	FIRE TERMINAL CABINET
	(FBO)	2#12, 1#12G THHN/THWN IN CONDUIT
	(FBO)	MECHANICAL UNIT
	(FBO)	UNDERGROUND PULLBOX
(X)	N/A	FUSE/FUSE BLOCK (X = AMPERAGE)
EOL Re	N/A	END-OF-LINE RESISTOR (2.2kΩ)
120V	N/A	120VAC POWER
AFF		ABOVE FINISHED FLOOR
C, COM		COMMON
(E)		EXISTING
EOL		END-OF-LINE RESISTOR

SYM./ABBREV.	PART #	DESCRIPTION
EOLR	N/A	END-OF-LINE RELAY
(FBEC)		FURNISHED BY ELECTRICAL CONTRACTOR
(FBFS)		FURNISHED BY FIRE SPRINKLER CONTRACTOR
(FBMC)		FURNISHED BY MECHANICAL CONTRACTOR
(FBO)		FURNISHED BY OTHERS
FSR		FIRE SPRINKLER RISER
IDC		INITIATING DEVICE CIRCUIT (HARDWIRED INITIATION CIRCUIT/ZONE)
(N)		NEW
N/A		NOT APPLICABLE
NAC		NOTIFICATION APPLIANCE CIRCUIT (SIGNALING CIRCUIT)
NC		NORMALLY CLOSED
NO		NORMALLY OPEN
PIV		POST INDICATOR VALVE
SLC		SIGNALING LINE CIRCUIT (ADDRESSABLE INITIATION LOOP)
TYP.		TYPICAL
UON		UNLESS OTHERWISE NOTED
Z		ZONE

CABLE SCHEDULE (ALL CABLES TO BE FURNISHED AND INSTALLED BY OTHERS)

TYPE	DESCRIPTION	USE
CABLES INSTALLED IN CONDUIT		
A	WEST PENN D980 (2#18 SOL, UTP, FPLR)	SLC (ADDRESSABLE LOOP) INTERIOR
AE	WEST PENN AQC224 (2#18 SOL, UTP, FPL)	SLC (ADDRESSABLE LOOP) EXTERIOR
B	WEST PENN D980 &* WEST PENN 990S	SLC (ADDRESSABLE LOOP) W/SUPERVISED POWER INTERIOR
D	4#18 SOL, US, FPLR + 2#18 SOL, TSP, FPLR	EIS1-485
V	WEST PENN (2#16 SOL, STP, FPLR)	NAC (VOICE CIRCUIT) INTERIOR
S	WEST PENN D994S (2#14 SOL, UTP, FPLR)	NAC (SIGNALING CIRCUIT) INTERIOR
SE	WEST PENN AQC226 (2#14 SOL, UTP, FPL)	NAC (SIGNALING CIRCUIT) EXTERIOR
P	WEST PENN D990S (2#16 SOL, UTP, FPLR)	24V POWER INTERIOR
PE	WEST PENN AQC225 (2#16 SOL, UTP, FPL)	24V POWER EXTERIOR
M	WEST PENN D994S (2#14 SOL, UTP, FPLR)	MONITOR WIRING
N	2#12 THHN/THWN SOL	GENERAL PURPOSE CIRCUIT

CABLE DESCRIPTION ABBREVIATIONS

ABBREV.	DEFINITION	ABBREV.	DEFINITION	ABBREV.	DEFINITION
FPL	FIRE ALARM POWER-LIMITED	OS	OVERALL SHIELDED CABLE	STP	SHIELDED TWISTED PAIR
FPLP	FIRE ALARM POWER-LIMITED, PLENUM	SOL	SOLID CONDUCTOR	US	UNSHIELDED CABLE
FPLR	FIRE ALARM POWER-LIMITED, RISER	STR	STRANDED CONDUCTOR	UTP	UNSHIELDED TWISTED PAIR

FIRE ALARM SYSTEM EQUIPMENT LIST

SYMBOL	PART #	DESCRIPTION	MANUFACTURER	CSFM #	BACKBOX* MOUNTING	BACKBOX* SIZE*	BACKBOX* TRIM RING*
FACU	NFS2-640		NOTIFIER	7165-0028:0243	SURFACE	24"x38"x6"	N/A
	CAS2-4	"C" EQ SERIES CABINET					
	NFS-LBB	BATTERY BOX					
	CPU2-640	CPU					
	CPS-24	POWER SUPPLY					
	(2) HS-NCM-W	NETWORK CARD (COPPER)					
	DAA2-5025	50W 25V DIGITAL AMP					
	DVS3-EM	DIGITAL VOICE COMMAND					
	DVS3-KD	DIGITAL VOICE KEYPAD/CONTROL					
MIC FAA	NCS1-2	NETWORK REMOTE ANNUNICATOR	NOTIFIER	7165-0028:0243	SURFACE	24"X14"X6"	TR-AA4
	RM-1	REMOTE MICROPHONE					
	CAS2-4	"AA" EQ SERIES CABINET					
AM	FMM-101 / FDM-1	MINI MONITOR MODULE	NOTIFIER	7300-0028:0219	SURFACE	4" SQ DP	N/A
RAM	FRM-1A	REMOTE RELAY MODULE	NOTIFIER	7300-0028:0219	SURFACE	4" SQ DP	N/A
F	NBG-12LX	ADDRESSABLE MANUAL PULL STATION	NOTIFIER	7150-0028:0199	SURFACE	4" SQ DP/ WIREMOLD BOX	BG12TR
S	FSP-951	PHOTO SMOKE DETECTOR	NOTIFIER	7272-0028:0503	FLUSH	4" SQ DP/ WIREMOLD BOX	4-O
	B210LP	DETECTOR BASE		7300-0028:0173			
SD	FPTI-951	MULTI-CRITERIA PHOTO/THERMAL DETECTOR	NOTIFIER	7272-0028:0510	FLUSH	4" SQ DP/ WIREMOLD BOX	4-O
	B501	STANDARD DETECTOR BASE		3240-1653:0209			
WSPSRL	SPSRL	WALL MOUNTED SPEAKER/STROBE	SYSTEM SENSOR	7320-1653:0505	FLUSH	4" SQ DP	N/A
WP	P2RL	WALL MOUNTED STROBE	SYSTEM SENSOR	7125-1653:0504	FLUSH	4" SQ DP	N/A
WSPKWP	SPWK	WALL MOUNTED EXTERIOR SPEAKER	SYSTEM SENSOR	7320-1653:0201	MFG	4" SQ DP	N/A
	MWBB	SPEAKER BACKBOX					
WSPSCRLWP	SPSCRL	CEILING MOUNTED SPEAKER/STROBE	SYSTEM SENSOR	7320-1653:0505	FLUSH	4" SQ DP	N/A
W	SCRL	CEILING MOUNTED STROBE	SYSTEM SENSOR	7125-1653:0504	FLUSH	4" SQ DP	N/A

* NOTES: 1. ALL REQUIRED BACKBOXES, TRIM RINGS, ENCLOSURES, COVER PLATES, ETC. ARE TO BE PROVIDED AND INSTALLED BY CONTRACTOR UNLESS SPECIFICALLY NOTED ABOVE AS "(BY TSI)".
2. ANY DEVIATION FROM LISTED EQUIPMENT SHALL BE APPROVED BY THE OWNER PRIOR TO "ROUGH-IN".
3. DESCRIPTORS a= ATTIC & ac= ABOVE AST CEILING

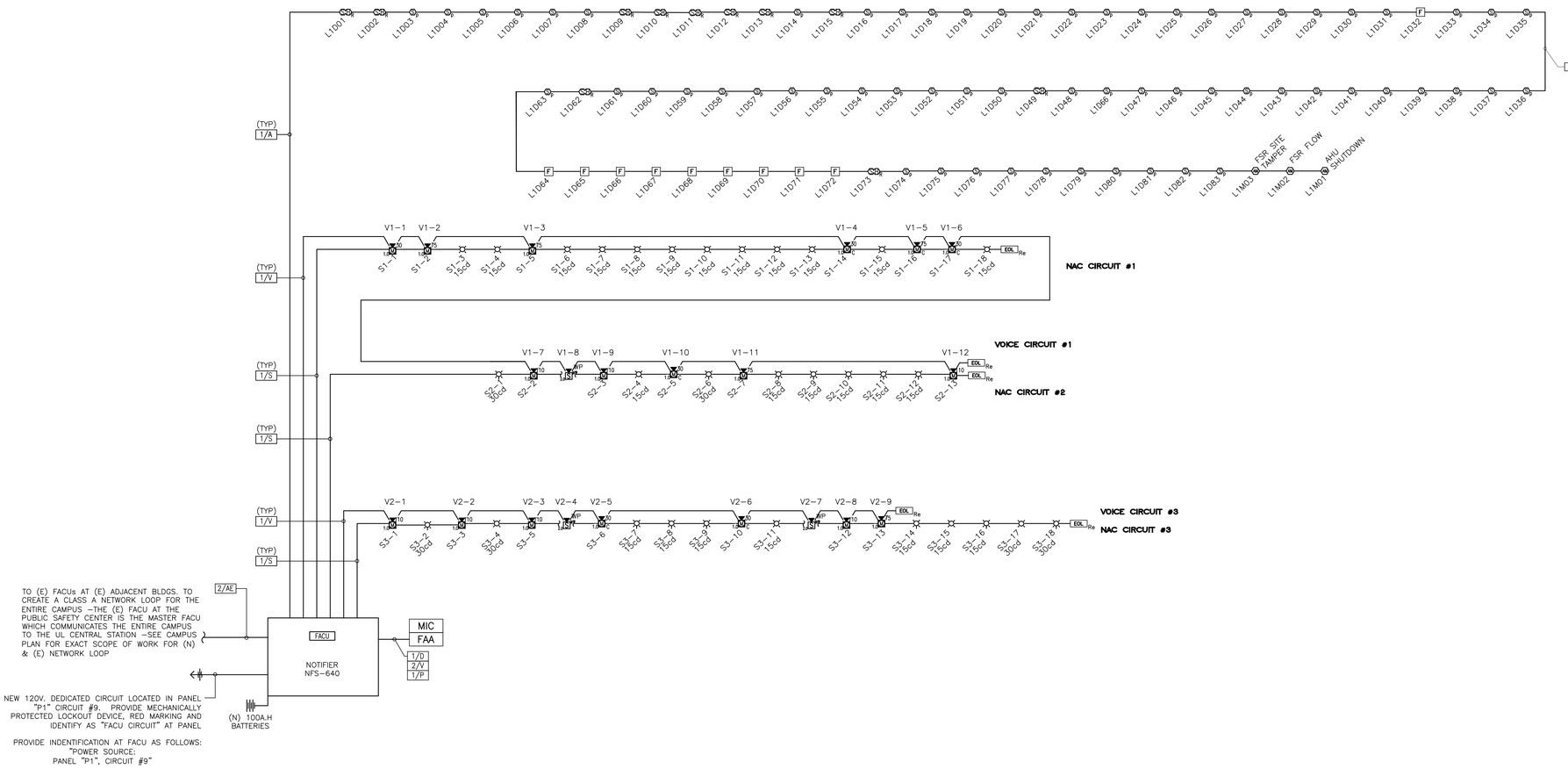

1 FIRE ALARM RISER DIAGRAM
SCALE: NTS

Division of the State Architect

APPROVED
DIV. OF THE STATE ARCHITECT
APP: 02-119316 INC:
REVIEWED FOR
SS☐ FLS☐ ACS☑
DATE: 03/24/2022

Office of the State Fire Marshal

OFFICE OF THE STATE FIRE MARSHAL
APPROVED FIRE AND PANIC ONLY
03/14/22
21-0498
Approval of this plan does not authorize or approve any omission or deviation from applicable requirements. Final approval is subject to field inspection. One set of approved plans shall be available on the project site at all times.

CSUS CHILD DEVELOPMENT CENTER

CALIFORNIA STATE UNIVERSITY, STANISLAUS
ONE UNIVERSITY CIRCLE
TURLOCK, CA 95382

ehdd.
PIER 1, BAY 2
THE EMBARCADERO
SAN FRANCISCO, CA 94111
INFO@EHDD.COM
+1 415-285-9193

Consultant

PEZZONI ENGINEERING, INC.
CONSULTING ELECTRICAL ENGINEERS
1100 PITTMAN AVE #101 Fallbrook, CA 92084
PHONE: 209.754.4602
HTTP://WWW.PEZENGR.COM

PEZZONI ENGINEERING, INC. © Copyrighted 2020

Stamp

Printing	Date
95% CONSTRUCTION DOCUMENTS	06.25.2021
PERMIT SET	08.16.2021
PERMIT SET - DSA V2	12.15.2021
PERMIT SET - SFM	12.21.2021

Revisions and Description	Date

Scale
AS NOTED

Drawn by
CCM / KP

EHDD Job Number
20020

Sheet Title
FIRE ALARM DETAILS

Sheet Number
E4.2 V3

8/6/2021 5:44:22 PM
12/15/21 11:44:52 AM F:\20\546 CSUS CHILD DEVELOPMENT CENTER\ENGR\SHEETS\546_E4.1 FIRE ALARM PLAN.DWG cmendez

VOLTAGE DROP — **CIRCUIT: S1**

VOLTAGE: 24.0 V
TOTAL V.D.: 0.918 V
% DROP: 3.83%

NODE	CURRENT	CABLE LENGTH (x2)	AWG	CIRC. M.	OHM/FT	V.D.
1	1.014 A	72'	14	4110	0.00267	0.195 V
2	0.951 A	51'	14	4110	0.00267	0.129 V
3	0.840 A	48'	14	4110	0.00267	0.108 V
4	0.799 A	18'	14	4110	0.00267	0.038 V
5	0.758 A	30'	14	4110	0.00267	0.061 V
6	0.647 A	30'	14	4110	0.00267	0.052 V
7	0.606 A	78'	14	4110	0.00267	0.126 V
8	0.565 A	21'	14	4110	0.00267	0.032 V
9	0.524 A	15'	14	4110	0.00267	0.021 V
10	0.483 A	25'	14	4110	0.00267	0.032 V
11	0.442 A	10'	14	4110	0.00267	0.012 V
12	0.401 A	6'	14	4110	0.00267	0.006 V
13	0.360 A	6'	14	4110	0.00267	0.006 V
14	0.319 A	55'	14	4110	0.00267	0.047 V
15	0.256 A	34'	14	4110	0.00267	0.023 V
16	0.215 A	22'	14	4110	0.00267	0.013 V
17	0.104 A	44'	14	4110	0.00267	0.012 V
18	0.041 A	46'	14	4110	0.00267	0.005 V

VOLTAGE DROP — **CIRCUIT: S2**

VOLTAGE: 24.0 V
TOTAL V.D.: 1.919 V
% DROP: 8.00%

NODE	CURRENT	CABLE LENGTH (x2)	AWG	CIRC. M.	OHM/FT	V.D.
1	0.949 A	458'	14	4110	0.00267	1.160 V
2	0.886 A	102'	14	4110	0.00267	0.241 V
3	0.738 A	96'	14	4110	0.00267	0.189 V
4	0.590 A	29'	14	4110	0.00267	0.046 V
5	0.549 A	34'	14	4110	0.00267	0.050 V
6	0.486 A	70'	14	4110	0.00267	0.091 V
7	0.423 A	29'	14	4110	0.00267	0.033 V
8	0.312 A	58'	14	4110	0.00267	0.048 V
9	0.271 A	33'	14	4110	0.00267	0.024 V
10	0.230 A	33'	14	4110	0.00267	0.020 V
11	0.189 A	25'	14	4110	0.00267	0.013 V
12	0.041 A	36'	14	4110	0.00267	0.004 V

VOLTAGE DROP — **CIRCUIT: S3**

VOLTAGE: 24.0 V
TOTAL V.D.: 2.100 V
% DROP: 8.75%

NODE	CURRENT	CABLE LENGTH (x2)	AWG	CIRC. M.	OHM/FT	V.D.
1	1.287 A	130'	14	4110	0.00267	0.447 V
2	1.176 A	61'	14	4110	0.00267	0.192 V
3	1.135 A	35'	14	4110	0.00267	0.106 V
4	0.987 A	61'	14	4110	0.00267	0.161 V
5	0.946 A	76'	14	4110	0.00267	0.192 V
6	0.798 A	101'	14	4110	0.00267	0.215 V
7	0.735 A	58'	14	4110	0.00267	0.114 V
8	0.694 A	47'	14	4110	0.00267	0.087 V
9	0.653 A	38'	14	4110	0.00267	0.066 V
10	0.612 A	50'	14	4110	0.00267	0.082 V
11	0.549 A	40'	14	4110	0.00267	0.059 V
12	0.508 A	73'	14	4110	0.00267	0.099 V
13	0.360 A	163'	14	4110	0.00267	0.157 V
14	0.249 A	44'	14	4110	0.00267	0.029 V
15	0.208 A	35'	14	4110	0.00267	0.019 V
16	0.167 A	116'	14	4110	0.00267	0.052 V
17	0.126 A	48'	14	4110	0.00267	0.016 V
18	0.063 A	49'	14	4110	0.00267	0.008 V

CONDUIT FILL CALCULATION — **CONDITION : A**

QUANTITY	TYPE	DIAMETER (IN.)	AREA (IN^2)	TOTAL (IN^2)
1	'N' (2 #14 THWN)	0.104	0.008	0.017
			TOTAL =	0.017
TAKEN FROM CEC CHAPTER 9 TABLES:			3/4" PVC SCH 40 @ 40% FILL=	0.203
			3/4" EMT @ 40% FILL=	0.213

CONDUIT FILL CALCULATION — **CONDITION : B**

QUANTITY	TYPE	DIAMETER (IN.)	AREA (IN^2)	TOTAL (IN^2)
1	'A' WESTPENN #D980	0.196	0.030	0.060
			TOTAL =	0.060
TAKEN FROM CEC CHAPTER 9 TABLES:			3/4" PVC SCH 40 @ 40% FILL=	0.203
			3/4" EMT @ 40% FILL=	0.213

CONDUIT FILL CALCULATION — **CONDITION : C**

QUANTITY	TYPE	DIAMETER (IN.)	AREA (IN^2)	TOTAL (IN^2)
1	'V' WESTPENN (2#16)	0.168	0.022	0.022
2	'S' WESTPENN #D994S	0.222	0.039	0.077
			TOTAL =	0.100
TAKEN FROM CEC CHAPTER 9 TABLES:			3/4" PVC SCH 40 @ 40% FILL=	0.203
			3/4" EMT @ 40% FILL=	0.213

CONDUIT FILL CALCULATION — **CONDITION : D**

QUANTITY	TYPE	DIAMETER (IN.)	AREA (IN^2)	TOTAL (IN^2)
2	'V' WESTPENN (2#16)	0.168	0.022	0.044
2	'S' WESTPENN #D994S	0.222	0.039	0.077
			TOTAL =	0.122
TAKEN FROM CEC CHAPTER 9 TABLES:			3/4" PVC SCH 40 @ 40% FILL=	0.203
			3/4" EMT @ 40% FILL=	0.213

CONDUIT FILL CALCULATION — **CONDITION : E**

QUANTITY	TYPE	DIAMETER (IN.)	AREA (IN^2)	TOTAL (IN^2)
1	'D' (4#18 +2#18)	0.17	0.023	0.023
		0.146	0.017	0.000
2	'V' WESTPENN (2#16)	0.168	0.022	0.044
1	'P' WESTPENN D990S	0.168	0.022	0.022
			TOTAL =	0.089
TAKEN FROM CEC CHAPTER 9 TABLES:			1" PVC SCH 40 @ 40% FILL=	0.333

WALL MOUNT TEMPLATE

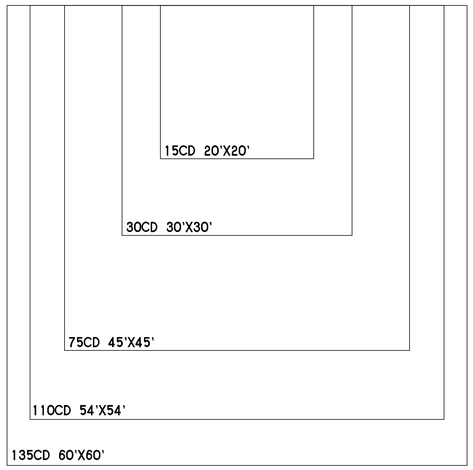

CEILING MOUNT TEMPLATE
@ 10' CEILING HEIGHT

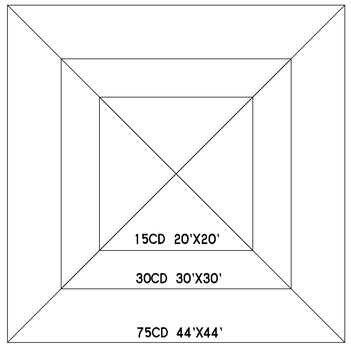

SMOKE/HEAT DETECTOR COVERAGE
30' DIA. OR 21' TO CORNER

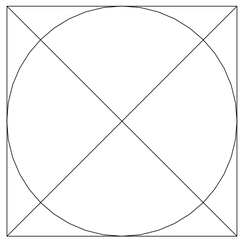

1 FIRE ALARM – MOUNTING TEMPLATE
SCALE: 1/8"=1'-0"

SCALE IN INCHES
0 1/16" 1/8" 1/4"

NOTIFIER by Honeywell — **System Current Draw - NFS2-640**

Total Current	
C1	2.325 A
C2	4.558 A
C3	2.165 A
C4	4.398 A

Primary Non-Alarm - C1: 0.00 0.88 1.76 2.64 3.52 4.40 — 2.325
Power Used (Amps)

Primary Alarm - C2: 0.00 1.48 2.96 4.44 5.92 7.40 — 4.558
Power Used (Amps)

Device	C1 - Primary Non-Alarm Qty		Draw	Total	C2 - Primary Alarm Qty		Draw	Total	C3 - Secondary Non-Alarm Qty		Draw	Total
CPU2-640	1	x	0.25000	0.25000	1	x	0.25000	0.25000	1	x	0.25000	0.25000
CPS-24	1	x	0.00000	0.00000	1	x	0.00000	0.00000	1	x	0.04000	0.04000
# of NACs in use	4	x	0.03500	0.14000	4	x	0.03500	0.14000	4	x	0.03500	0.14000
XDM-R2 (Backlight On)	1	x	0.10000	0.10000	1	x	0.10000	0.10000	1	x	0.10000	0.10000
NCA2 - Backlight Off with loss of AC	1	x	0.40000	0.40000	1	x	0.40000	0.40000	1	x	0.20000	0.20000
HS-NOM-W/WF/SF/WMF/WSF/WFSF	2	x	0.40000	0.80000	2	x	0.40000	0.80000	2	x	0.40000	0.80000
SLC1 Device Activation Current	1	x	0.20000	0.20000	1	x	0.20000	0.20000	1	x	0.20000	0.20000
LEM-320 (SLC2)	0	x	0.10000		0	x	0.10000		0	x	0.10000	
SLC2 Device Activation Current	0	x	0.20000		0	x	0.20000		0	x	0.20000	
DVC-EM	1	x	0.30000	0.30000	1	x	0.30000	0.30000	1	x	0.30000	0.30000
DVC-XD	1	x	0.06000	0.06000	1	x	0.06000	0.06000	1	x	0.06000	0.06000
RM-1 (with DVC-EM)	1	x	0.07500	0.07500	1	x	0.07500	0.07500	1	x	0.07500	0.07500
DS-FM, DS-SFM, DS-RFM	0	x	0.06000		0	x	0.06000		0	x	0.06000	
SLC Loop Device Activation Current					1	x	0.20000	0.20000				
FCM-1-REL (Aux. Power)	0	x	0.00640		0	x	0.01000		0	x	0.00640	
I9200S (Aux. Power)	0	x	0.00050		0	x	0.02500		0	x	0.00050	
SWL15	18	x	0.00000	0.00000	18	x	0.04300	0.77400	18	x	0.00000	0.00000
SWL30	2	x	0.00000	0.00000	2	x	0.06300	0.12600	2	x	0.00000	0.00000
SWL75	1	x	0.00000	0.00000	1	x	0.10700	0.10700	1	x	0.00000	0.00000
SPSCRV15	2	x	0.00000	0.00000	2	x	0.06600	0.13200	2	x	0.00000	0.00000
SPSCRL30	4	x	0.00000	0.00000	4	x	0.06300	0.25200	4	x	0.00000	0.00000
SPSRL75	6	x	0.00000	0.00000	6	x	0.10700	0.64200	6	x	0.00000	0.00000
			Total Non-Alarm Load:	2.325			Total Alarm Load:	4.558			Total Standby Load:	2.165

C4 - Maximum Secondary Fire Alarm Current Draw
Only include those additional power supplies that are backed up by the control panels batteries.

Device	Qty		Draw	Total
Total Primary Alarm Load - C2			4.558	4.558
CPS-24	1	x	0.040	0.040
NCA2 - Backlight Off with loss of AC	1	x	-0.200	-0.200
APS-6R Power Supplies			0.000	
APS2-6R Power Supplies			0.000	
ACPS-610 Power Supplies			0.000	
FCPS-24S8 Power Supplies			0.000	
FCPS-24S8 Power Supplies			0.000	
HPFF8 Power Supplies			0.000	
HPFF12 Power Supplies			0.000	
DAA2 Series			0.000	
DAX Series			0.000	
DAA Series			0.000	
DS-DB			0.000	
FireVoice Panels			0.000	
FireVoice Distributed Audio Panels			0.000	
NFC-50/100			0.000	
NFC Distributed Audio			0.000	
XPQ			0.000	
AA-30	0	x	3.000	
AA-120	0	x	7.300	
Other Power Supply	0	x	0.000	
GTM-530	0	x	0.000	
			Total Standby Alarm Load:	4.398

NOTIFIER by Honeywell — **System Power Requirements**

Notifier NFS2-640 Fire Alarm Control Panel

Protected Premises: CSUS CHILD DEVELOPMENT CENTER — Date: 8/6/2021
Address: 1 UNIVERSITY CIRCLE
City: TURLOCK — State: CA — Zip: 95382

Prepared By: PEZZONI ENGINEERING, INC. — Phone: 209-554-5600
Address: 1150 9TH STREET, STE. #1415 — Email: [redacted]
City: MODESTO — State: CA — Zip: 95354

AC Branch Current Requirements 5.00 AMPS @ 120 VAC
Current required by source to power the fire alarm system.

Primary Standby Load 2.33 Amps
Current load on the primary power supply during **non-alarm** conditions.

Primary Alarm Load 4.56 Amps
Current load on the primary power supply during **alarm** conditions.

Secondary Load Requirements 63.67 Amp Hours
Total Secondary Load from the calculation table below.

Current Draw		Time (hours)	Total (AH)
Secondary Standby Load 2.165 A	x	Required Standby Time 24 hours	51.96
Secondary Alarm Load 4.398 A	x	Required Alarm Time 0.250 hours	1.10
		Total Secondary Load	53.06
		Derating factor	x 1.2
		Secondary Load Requirements (Amp Hours)	63.67 AH

Battery Selection 100 Amp Hours
Select batteries from the list below:
100 AH BAT-121000 Battery (12 volt)
☑ Two ☐ Four (two 12VDC sets in parallel)

Battery Distribution Chart
Shows amp-hour distribution of your selections.

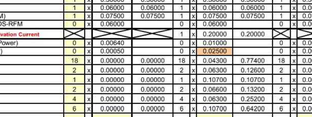

Comments
1. Battery size exceeds FACP capacity. BB-55 or other external battery box
2. Selected battery size meets secondary load requirements.
3. The selected batteries (100AH) are within the charger range of this power supply (18-200AH).

Spare Battery Capacity	36.33	Battery Selection (AH) - Secondary Load Requirements (AH)
Secondary Standby Load	63.33	Secondary Standby Load (AH) * Derating Factor
Secondary Alarm Load	1.10	Secondary Alarm Load (AH) * Derating Factor

Division of the State Architect

APPROVED
DIV. OF THE STATE ARCHITECT
APP: 02-119316 INC:
REVIEWED FOR
SS☐ FLS☐ ACS☑
DATE: 03/24/2022

Office of the State Fire Marshal

OFFICE OF THE STATE FIRE MARSHAL APPROVED FIRE AND PANIC ONLY
03/14/22
21-0498
Approval of this plan does not authorize or approve any omission or deviation from applicable requirements. Final approval is subject to field inspection. One set of approved plans shall be available on the project site at all times.

CSUS CHILD DEVELOPMENT CENTER

CALIFORNIA STATE UNIVERSITY, STANISLAUS
ONE UNIVERSITY CIRCLE
TURLOCK, CA 95382

ehdd.
PIER 1, BAY 2
THE EMBARCADERO
SAN FRANCISCO, CA 94111
INFO@EHDD.COM
+1 415-285-9193

Consultant

PEZZONI ENGINEERING, INC.
CONSULTING ELECTRICAL ENGINEERS
1150 9TH Street, Suite #1415 Modesto, CA 95354
PHONE: 209 554 4602
HTTP://WWW.PEZENGR.COM

PEZZONI ENGINEERING, INC. © Copyrighted 2020

Stamp

Printing / Date

Printing	Date
95% CONSTRUCTION DOCUMENTS	06.25.2021
PERMIT SET	08.16.2021
PERMIT SET - DSA V2	12.15.2021
PERMIT SET - SFM	12.21.2021

Revisions and Description / Date

Scale
AS NOTED

Drawn by
CCM / KP

EHDD Job Number
20020

Sheet Title
FIRE ALARM CALCULATIONS

Sheet Number
E4.3 V3

8/6/2021 5:44:22 PM

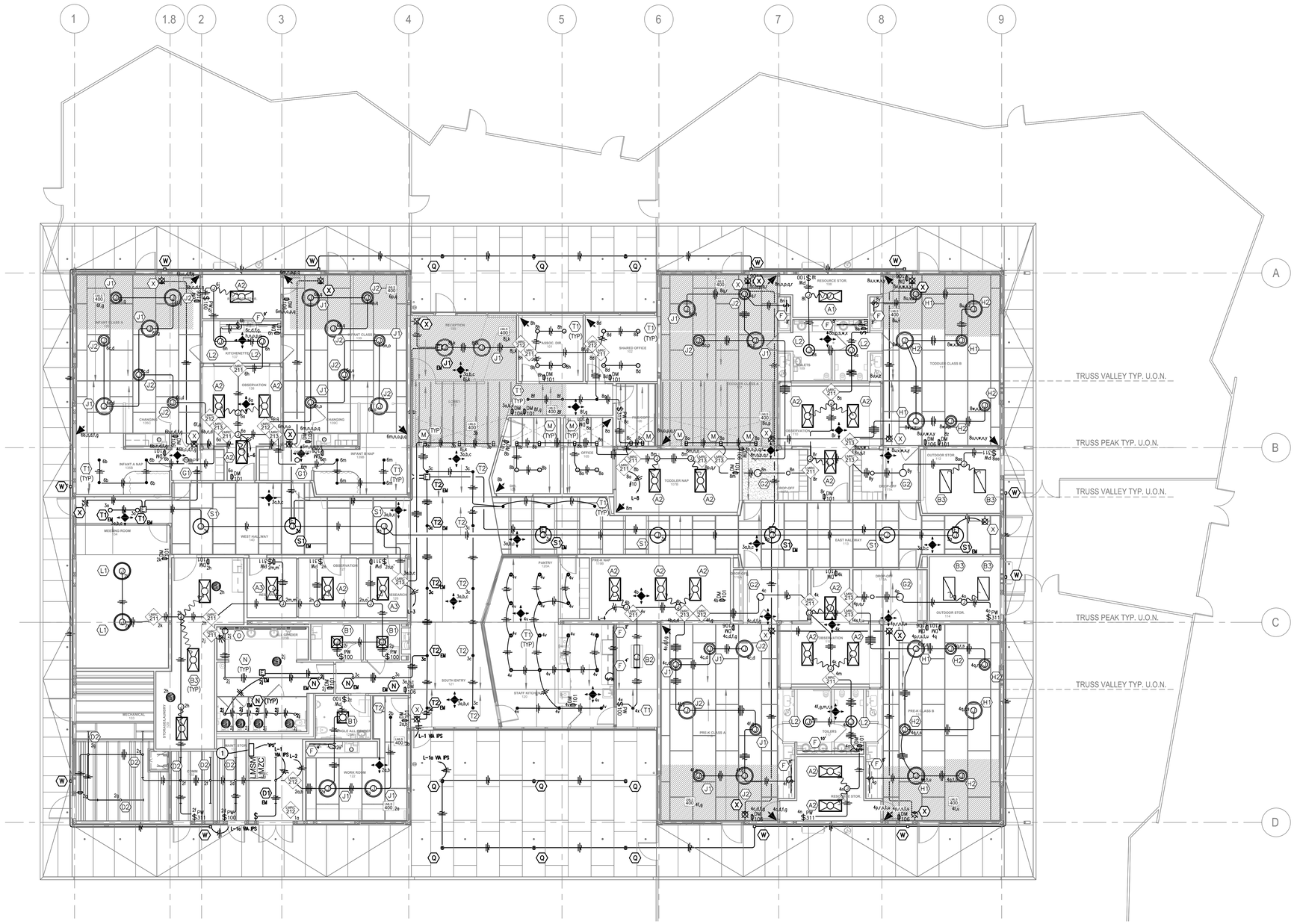

1 CEILING PLAN – LIGHTING

SCALE: 1/8"=1'-0"

SCALE IN INCHES
0 1/16" 1/8" 1/4"

SHEET NOTES

1. REFER TO THE GENERAL NOTES ON SHEET E0.1 FOR ADDITIONAL REQUIREMENTS.
2. ELECTRICAL PLANS ARE SCHEMATIC, COORDINATE LIGHT FIXTURE LOCATIONS WITH THE ARCHITECTURAL REFLECTED CEILING PLANS FOR ALL LIGHT FIXTURE LOCATIONS AND THE ARCHITECTURAL DRAWINGS FOR ALL DEVICE LOCATIONS PRIOR TO ROUGH-IN.
3. LOW VOLTAGE AND 0-10V WIRES ARE NOT SHOWN FOR CLARITY. CONTRACTOR IS RESPONSIBLE TO PROVIDE ALL WIRING, WHETHER SHOWN OR NOT SHOWN, AS REQUIRED FOR A COMPLETE AND OPERABLE LIGHTING SYSTEM. REFER TO THE LIGHTING CONTROL WIRING DIAGRAMS FOR WIRING REQUIREMENTS.
4. ALL LIGHTING CONTROL ROOM CONTROLLERS SHALL BE INSTALLED IN THE ACCESSIBLE CEILING SPACE ABOVE THE T-BAR CEILING, WHEREVER POSSIBLE.
5. SWITCH OUTLET BOX, (WITH UNRESTRICTED CLEAR APPROACH), MOUNTING HEIGHT SHALL BE LOCATED NO MORE THAN 48" MEASURED FROM THE TOP OF THE OUTLET BOX NOR LESS THAN 15" MEASURED FROM THE BOTTOM OF THE OUTLET BOX TO THE LEVEL OF THE FINISHED FLOOR OR WORKING PLATFORM AS REQUIRED BY C.B.C SECTION 118-308.1.1. SWITCH OUTLET BOX LOCATED ABOVE COUNTER, WHERE ACCESS IS RESTRICTED, MOUNTING HEIGHT SHALL BE NO MORE THAN 3'-10" MEASURED FROM THE TOP OF THE OUTLET BOX FOR SIDE REACH OR 3'-8" MEASURED FROM THE TOP OF THE OUTLET BOX FOR FORWARD REACH TO THE LEVEL OF THE FINISHED FLOOR OR WORKING PLATFORM.
6. CONTRACTOR IS RESPONSIBLE TO PROVIDE ALL JUNCTION BOXES, CONDUIT AND WIRING AS REQUIRED FOR A COMPLETE AND OPERABLE SYSTEM. WIRING SHALL COMPLY WITH C.E.C 210.4(B).
7. DAYLIGHTING ZONE LEGEND:

   PRIMARY ZONE SECONDARY ZONE
8. "EM" DENOTES LIGHT FIXTURE CONNECTED ONTO AN EMERGENCY CIRCUIT VIA A UL942 RELAY & CENTRALIZED INVERTER PER CEC 700 PART IV. REFER TO SHEET E5.1E FOR A DRAWING OF JUST EMERGENCY LIGHT CIRCUIT, RELAY, AND CONNECTED LIGHT FIXTURES.

(#) PLAN NOTES

1. (N) EMERGENCY LIGHTING INVERTER -EMERGILITE #120SG1500-FTCM-120-90-ICB-OCA0120-RS232 120Vin/120vout -1500VA UL942 IPS

LIGHTING CONTROL SYSTEM PERFORMANCE SPECIFICATIONS

1. PROVIDE A COMPLETE AND FULLY OPERATIONAL AUTOMATIC LIGHTING CONTROL SYSTEM IN COMPLIANCE WITH THE 2019 BUILDING ENERGY EFFICIENCY STANDARDS.
2. THE LIGHTING CONTROL SYSTEM SHALL BE WATTSTOPPER DIGITAL LIGHTING MANAGEMENT SYSTEM (DLM). THE LIGHTING CONTROL SYSTEM SHALL BE DONE ON A "DESIGN BUILD" BASIS. THE CONTRACTOR IS REQUIRED TO PREPARE AND SUBMIT SHOP DRAWINGS FOR REVIEW BY THE ARCHITECT AND ELECTRICAL ENGINEER AND FOR REVIEW AND WRITTEN APPROVAL BY THE AUTHORITY HAVING JURISDICTION PRIOR TO THE START OF WORK. THE SHOP DRAWING SUBMITTAL SHALL INCLUDE DEVICE LAYOUT, CONDUIT AND WIRING REQUIREMENTS, RISER DIAGRAMS AND DEVICE PRODUCT CUT SHEETS. THE CONTRACTOR SHALL PROVIDE ALL REQUIRED COMPONENTS AND HARDWARE AS REQUIRED FOR A COMPLETE AND OPERATIONAL SYSTEM.
4. PROVIDE ALL LIGHTING CONTROL DEVICES, WHETHER SHOWN OR NOT SHOWN, AS REQUIRED FOR A COMPLETE AND OPERABLE LIGHTING SYSTEM. COORDINATE THE LIGHTING CONTROL DEVICE PLACEMENT FOR OPTIMUM COVERAGE OF AREA AND TO MINIMIZE FALSE ON/OFF. INSTALL DEVICES IN ACCORDANCE WITH THE MANUFACTURER'S REQUIREMENTS AND MAKE ALL FINAL DEVICE CONNECTIONS AND FINAL ADJUSTMENTS OF SENSORS.
5. ELECTRICAL CONTRACTOR SHALL INSTALL ALL LIGHTING CONTROL DEVICES IN ACCORDANCE TO THE MANUFACTURERS REQUIREMENTS, THIS SHALL INCLUDE ALL LOW VOLTAGE WIRING NOT INDICATED ON PLANS.
6. PROVIDE ALL CONDUIT AND WIRING, WHETHER SHOWN OR NOT SHOWN, AS REQUIRED FOR A COMPLETE AND OPERABLE LIGHTING SYSTEM.
7. REFER TO THE LIGHTING CONTROL SEQUENCE OF OPERATION ON SHEET E1.2.
8. REFER TO THE POWER PLAN, SHEET E5.1, FOR THE PLUG LOAD CONTROLLER LOCATIONS.
9. FOR LIGHTING CONTROL REQUIREMENTS, SEE THE LIGHTING CONTROL WIRING DIAGRAMS.
10. CONTRACTOR SHALL PROVIDE A FACTORY START-UP TO ENSURE PROPER OPERATION OF THE LIGHTING CONTROL SYSTEM.
11. UPON COMPLETION OF THE INSTALLATION OF THE LIGHTING CONTROL SYSTEM, A FINAL TEST OF THE ENTIRE SYSTEM SHALL BE PERFORMED TO DEMONSTRATE COMPLIANCE.

Division of the State Architect

APPROVED
DIV. OF THE STATE ARCHITECT
APP: 02-119316 INC:
REVIEWED FOR
SS☐ FLS☐ ACS☑
DATE: 03/24/2022

Office of the State Fire Marshal

OFFICE OF THE STATE FIRE MARSHAL APPROVED FIRE AND PANIC ONLY

03/14/22
21-0498

Approval of this plan does not authorize or approve any omission or deviation from applicable requirements. Final approval is subject to field inspection. One set of approved plans shall be available on the project site at all times.

CSUS CHILD DEVELOPMENT CENTER

CALIFORNIA STATE
UNIVERSITY, STANISLAUS
ONE UNIVERSITY CIRCLE
TURLOCK, CA 95382

ehdd.

PIER 1, BAY 2
THE EMBARCADERO
SAN FRANCISCO, CA 94111

INFO@EHDD.COM
+1 415-285-9193

Consultant

PEZZONI ENGINEERING, INC.
CONSULTING ELECTRICAL ENGINEERS
1550 9TH Street Suite #1415 Modesto, CA 95354
PHONE: 209 554 -4822
HTTP://WWW.PEZENGR.COM

PEZZONI ENGINEERING, INC. © Copyrighted 2020

Stamp

Printing	Date
95% CONSTRUCTION DOCUMENTS	06.25.2021
PERMIT SET	08.16.2021
PERMIT SET - DSA V2	12.15.2021
PERMIT SET - SFM	12.21.2021

Revisions and Description	Date

Scale
AS NOTED

Drawn by
CCM / KP

EHDD Job Number
20020

Sheet Title
CEILING PLAN - LIGHTING

Sheet Number
E5.1 V3

12/15/21 11:45:08 AM F:\20\546 CSUS CHILD DEVELOPMENT CENTER\ENGR\SHEETS\546_E5.1 FLOOR PLAN - LIGHTING.DWG cmendez

8/6/2021 5:44:22 PM

12/15/21 11:45:11 AM F:\20\546 CSUS CHILD DEVELOPMENT CENTER\ENGR\SHEETS\546_E5.1 FLOOR PLAN – LIGHTING.DWG cmendez

SHEET NOTES

1. REFER TO THE GENERAL NOTES ON SHEET E0.1 FOR ADDITIONAL REQUIREMENTS.

1 CEILING PLAN – LIGHTING EMERGENCY
SCALE: 1/8"=1'-0"

SCALE IN INCHES
0 1/16" 1/8" 1/4"

PLAN NOTES

1. (N) EMERGENCY LIGHTING INVERTER –EMERGILITE #120SG1500–FTCM–120–90–ICB–OCA0120–RS232 120Vin/120vout –1500VA UL942 IPS

Division of the State Ar

APPROVED
DIV. OF THE STATE ARCHITECT
APP: 02-119316 INC:
REVIEWED FOR
SS☐ FLS☐ ACS☑
DATE: 03/24/2022

Office of the State Fire Marshal

OFFICE OF THE STATE FIRE MARSHAL
APPROVED FIRE AND PANIC ONLY
03/14/22
21-0498
Approval of this plan does not authorize or approve any omission or deviation from applicable regulations. Final approval is subject to field inspection. One set of approved plans shall be available on the project site at all times.

CSUS CHILD DEVELOPMENT CENTER

CALIFORNIA STATE UNIVERSITY, STANISLAUS
ONE UNIVERSITY CIRCLE
TURLOCK, CA 95382

ehdd.

PIER 1, BAY 2
THE EMBARCADERO
SAN FRANCISCO, CA 94111

INFO@EHDD.COM
+1 415-285-9193

Consultant

PEZZONI ENGINEERING, INC.
CONSULTING ELECTRICAL ENGINEERS
1150 9th Street Suite #1415 Modesto, CA 95354
PHONE: 209 554 4602
HTTP://WWW.PEZENGR.COM

PEZZONI ENGINEERING, INC. © Copyrighted 2020

Stamp

REGISTERED PROFESSIONAL ENGINEER
KEVIN L. PEZZONI
NO. 16763
EXP. 12/23
ELECTRICAL
STATE OF CALIFORNIA

Printing	Date
95% CONSTRUCTION DOCUMENTS	06.25.2021
PERMIT SET	08.16.2021
PERMIT SET - DSA V2	12.15.2021
PERMIT SET - SFM	12.21.2021

Revisions and Description	Date

Scale
AS NOTED

Drawn by
CCM / KP

EHDD Job Number
20020

Sheet Title
CEILING PLAN - LIGHTING EMERGENCY

Sheet Number
E5.1E V3

8/6/2021 5:44:22 PM

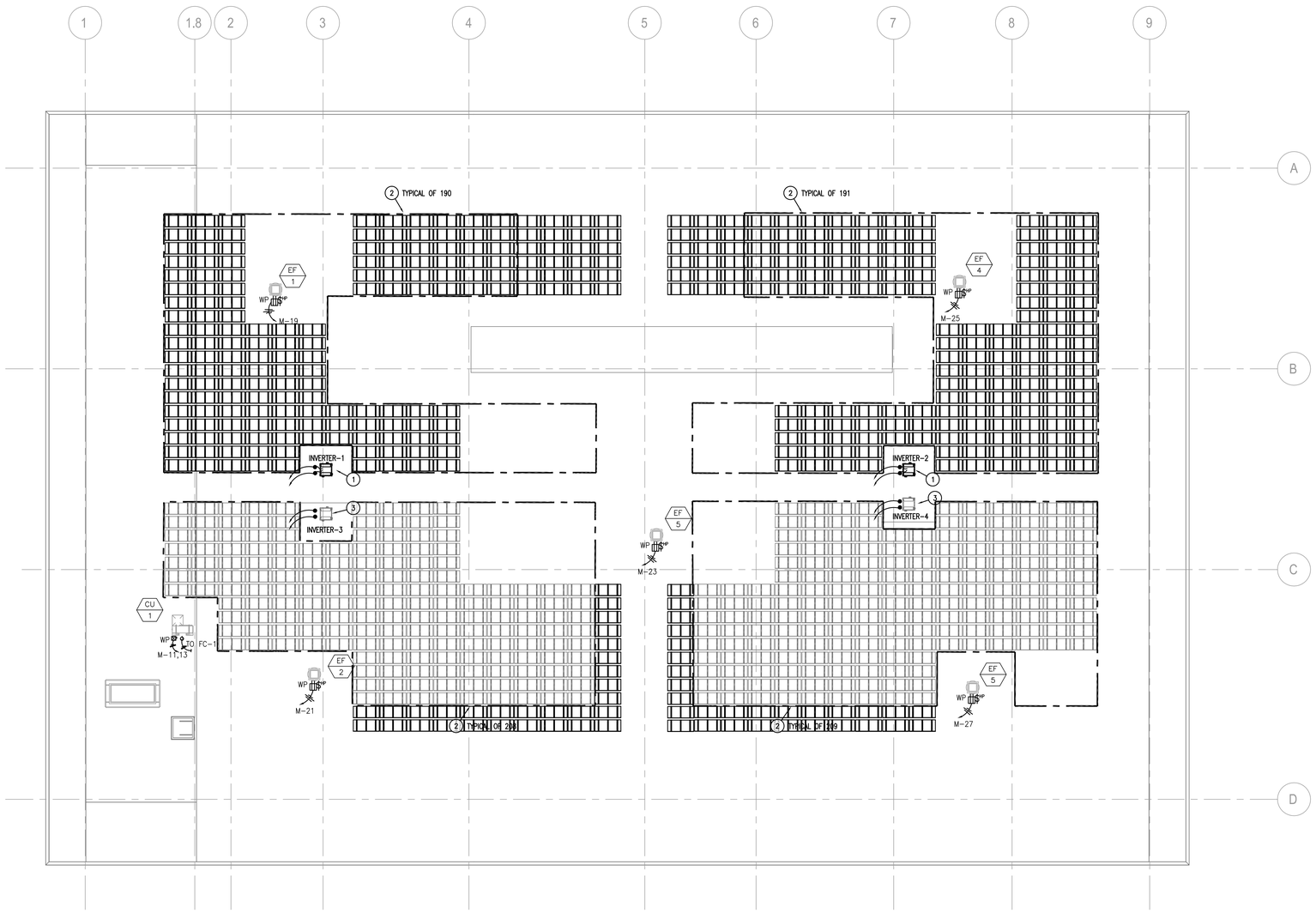

1 ROOF PLAN POWER
SCALE: 1/8"=1'-0"

N

SCALE IN INCHES
0 1/16" 1/8" 1/4"

SHEET NOTES

1. REFER TO THE GENERAL NOTES ON SHEET E0.1 FOR ADDITIONAL REQUIREMENTS.
2. ALL RECEPTACLES, WHETHER INDICATED OR NOT, INSTALLED WITH-IN SIX FEET (6') OF A SINK SHALL BE EQUIPPED WITH A GROUND FAULT CIRCUIT INTERRUPTER AS REQUIRED BY THE CALIFORNIA ELECTRICAL CODE (C.E.C.) 210.8(B)(5).
3. RECEPTACLE OUTLET BOX, (WITH UNRESTRICTED CLEAR APPROACH), MOUNTING HEIGHT SHALL BE LOCATED NO MORE THAN 48" MEASURED FROM THE TOP OF THE OUTLET BOX NOR LESS THAN 15" MEASURED FROM THE BOTTOM OF THE OUTLET BOX TO THE LEVEL OF THE FINISHED FLOOR OR WORKING PLATFORM AS REQUIRED BY C.B.C SECTION 11B-308.1.2. RECEPTACLE OUTLET BOX LOCATED ABOVE COUNTER, WHERE ACCESS IS RESTRICTED, MOUNTING HEIGHT SHALL BE NO MORE THAN 3'-10" MEASURED FROM THE TOP OF THE OUTLET BOX FOR SIDE REACH OR 3'-8" MEASURED FROM THE TOP OF THE OUTLET BOX FOR FORWARD REACH TO THE LEVEL OF THE FINISHED FLOOR OR WORKING PLATFORM.
4. SUBSCRIPT "ACT" AT DEVICE SYMBOL AT DEVICE INDICATES MOUNTING ABOVE COUNTER HEIGHT. COORDINATE DEVICE MOUNTING HEIGHT WITH THE ARCHITECTURAL INTERIOR ELEVATIONS PRIOR TO ROUGH-IN.
5. CONTRACTOR IS RESPONSIBLE TO PROVIDE ALL JUNCTION BOXES, CONDUIT AND WIRING AS REQUIRED FOR A COMPLETE AND OPERABLE SYSTEM. MULTI-WIRE BRANCH CIRCUIT WIRING SHALL COMPLY WITH C.E.C 210.4(B).
6. ALL RECEPTACLES SHALL BE TAMPER RESISTANT.
7. THE EQUIPMENT DESIGNATED "N.I.E.S." IS EITHER OWNER FURNISHED/CONTRACTOR INSTALLED OR FURNISHED AND INSTALLED UNDER OTHER SECTIONS OF THIS PROJECT. THE ELECTRICAL CONTRACTOR IS RESPONSIBLE TO MAKE ELECTRICAL CONNECTION TO EQUIPMENT AS REQUIRED BY THE EQUIPMENT. PROVIDE ALL NECESSARY JUNCTION BOXES, CONDUIT AND WIRING AS REQUIRED FOR COMPLETE INSTALLATION. COORDINATE CONNECTION REQUIREMENTS WITH EQUIPMENT PRIOR TO THE EXECUTION OF WORK.
8. REFER TO THE MECHANICAL SCHEDULE ON SHEETS M0 FOR MECHANICAL EQUIPMENT REQUIREMENTS.
9. MECHANICAL DRAWINGS AND SPECIFICATIONS ARE SUBJECT TO LAST MINUTE CHANGES, THEREFORE THE ELECTRICAL CONTRACTOR SHALL BE RESPONSIBLE FOR FINAL COORDINATION BETWEEN ELECTRICAL AND MECHANICAL DRAWINGS. CONDUIT AND WIRING FOR THE LOW VOLTAGE CONTROLS SHALL BE PROVIDED UNDER DIVISION 23 SCOPE OF WORK.
10. ELECTRICAL REQUIREMENTS FOR MECHANICAL EQUIPMENT AS SPECIFIED ON THE MECHANICAL DRAWINGS MAY BE DIFFERENT BASED ON ACTUAL MECHANICAL EQUIPMENT SUBMITTALS. ELECTRICAL CONTRACTOR SHALL BE RESPONSIBLE FOR FINAL COORDINATION WITH THE ACTUAL MECHANICAL EQUIPMENT SUBMITTALS AND PROVIDE CONDUIT, WIRES, DISCONNECT AND CIRCUIT BREAKERS, SIZE AS REQUIRED, PER EQUIPMENT NAMEPLATE RATING.
11. DISCONNECT SWITCHES LOCATED OUTSIDE SHALL BE WEATHERPROOF.

(#) PLAN NOTES

1. (N) PV INVERTER -ROOF TOP MOUNTED -SMA #CORE1-50-US (50kW -480V -3PH) UNIT -SEE STRUCTURAL FOR MOUNTING -INSTALL (N) 1 1/2"C (POWER) & 1"C (DATA) W/LFMC CONNECTIONS
2. (N) 430W PV PANEL -TYPICAL
3. (F) PV INVERTER -ROOF TOP MOUNTED -SMA #CORE1-50-US (62kW -480V -3PH) UNIT -SEE STRUCTURAL FOR MOUNTING -INSTALL (N) 1 1/2"C (POWER) & 1"C (DATA) W/CAPS
4. (F) PV PANELS -TYPICAL

Division of the State Ar
APPROVED
DIV. OF THE STATE ARCHITECT
APP: 02-119316 INC:
REVIEWED FOR
SS☐ FLS☐ ACS☑
DATE: 03/24/2022

Office of the State Fire Marshal

OFFICE OF THE STATE FIRE MARSHAL
APPROVED FIRE AND PANIC ONLY
03/14/22
21-0498
Approval of this plan does not authorize or approve any omission or deviation from applicable requirements. Final approval is subject to field inspection. One set of approved plans shall be available on the project site at all times.

CSUS CHILD DEVELOPMENT CENTER

CALIFORNIA STATE
UNIVERSITY, STANISLAUS
ONE UNIVERSITY CIRCLE
TURLOCK, CA 95382

ehdd.

PIER 1, BAY 2
THE EMBARCADERO
SAN FRANCISCO, CA 94111

INFO@EHDD.COM
+1 415-285-9193

Consultant

PEZZONI ENGINEERING, INC.
CONSULTING ELECTRICAL ENGINEERS
1100 17th Street, Suite #1001 Modesto, CA 95354
PHONE: 209.524.4662
HTTP://WWW.PEZENGR.COM

PEZZONI ENGINEERING, INC. © Copyrighted 2020

Stamp

Printing	Date
95% CONSTRUCTION DOCUMENTS	06.25.2021
PERMIT SET	08.16.2021
PERMIT SET - DSA V2	12.15.2021
PERMIT SET - SFM	12.21.2021

Revisions and Description	Date

Scale
AS NOTED

Drawn by
CCM / KP

EHDD Job Number
20020

Sheet Title
ROOF PLAN POWER

Sheet Number
E6.1 V3

12/15/21 11:45:15 AM F:\20\546 CSUS CHILD DEVELOPMENT CENTER\ENGR\SHEETS\546_E6.1 ROOF PLAN POWER.DWG cmendez

8/6/2021 5:44:22 PM

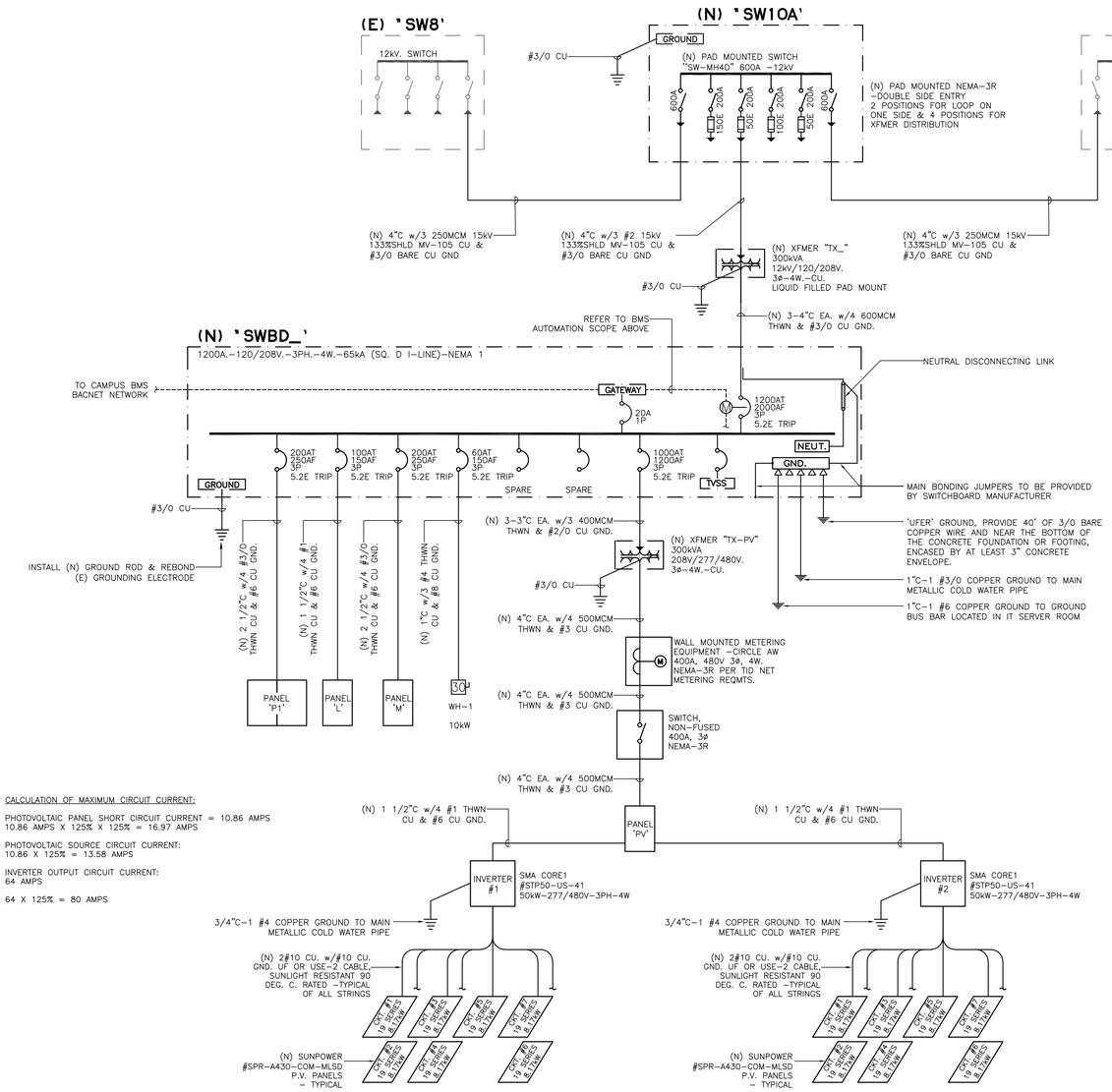

CALCULATION OF MAXIMUM CIRCUIT CURRENT:

PHOTOVOLTAIC PANEL SHORT CIRCUIT CURRENT = 10.86 AMPS
10.86 AMPS X 125% X 125% = 16.97 AMPS

PHOTOVOLTAIC SOURCE CIRCUIT CURRENT:
10.86 X 125% = 13.58 AMPS

INVERTER OUTPUT CIRCUIT CURRENT:
64 AMPS

64 X 125% = 80 AMPS

1 SINGLE LINE DIAGRAM

SCALE: NTS

BMS METERING AUTOMATION SCOPE

INTERNAL/EXTERIOR EQUIPMENT CABINET (20"WX36"HX6"D MIN.) W/BACKBOARD FOR CAMPUS METERING EQUIPMENT. CONTRACTOR TO COORDINATE WITH VENDOR FOR A MODBUS NETWORK BETWEEN ALL (N) METERS. WITHIN THE CABINET PROVIDE THE FOLLOW DIN RAIL MOUNTED EQUIPMENT:

- POWERLOGIC EGX300 MODBUS ETHERNET GATEWAY
- PHOENIX CONTACT #2891028- 4 PORT INDUSTRIAL ETHERNET SWITCH
- PHOENIX CONTACT #2866763- POWER SUPPLY UNIT 120VAC IN/24VDC OUT -10A OUTPUT
- PHOENIX CONTACT #5600462- DIN RAIL MOUNTED GFCI RECEPTACLE
- PROSOFT 5201-MNET-BACNET- MODBUS TCP/IP TO BACNET/IP CLIENT GATEWAY
- DIN MOUNTED BREAKERS (QNTY & RATING AS REQD.)

REFER TO DRAWING 5/E3.0 FOR 120VAC AND 24VDC INTERCONNECTION WIRING AS WELL AS COORDINATE 24VDC TO ALL MODBUS DEVICES (POWER ION METERS AND POWERLOGIC DEVICES). CONTRACTOR TO PROVIDE CAT-6 SHIELD PATCH CABLES FOR GATEWAYS, ETHERNET SWITCH, AND WAP. PROVIDE A COMPLETE AND WORKING SYSTEM FOR ALL POWERLOGIC BREAKERS SHOWN AND THE POWER-ION METER. CONTRACTOR TO COORDINATE MODBUS TAGS INTO BACNET GATEWAY FOR UNIVERSITY'S BMS VENDOR. CONTRACTOR SHALL COORDINATE ETHERNET TCP/IP CONNECTIVITY WITH UNIVERSITY'S EXISTING WIRELESS NETWORK VIA IT DEPT.

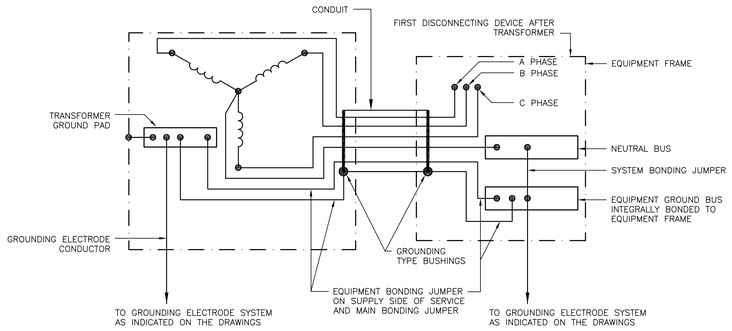

TRANSFORMER (NON-UTILITY) 3-PHASE, 4-WIRE SECONDARY POWER GROUNDING DETAIL

Division of the State Architect

APPROVED
DIV. OF THE STATE ARCHITECT
APP: 02-119316 INC:
REVIEWED FOR
SS☐ FLS☐ ACS☑
DATE: 03/24/2022

Office of the State Fire Marshal

OFFICE OF THE STATE FIRE MARSHAL APPROVED FIRE AND PANIC ONLY

03/14/22
21-0498

Approval of this plan does not authorize or approve any omission or deviation from applicable requirements. Final approval is subject to field inspection. One set of approved plans shall be available on the project site at all times.

CSUS CHILD DEVELOPMENT CENTER

CALIFORNIA STATE UNIVERSITY, STANISLAUS
ONE UNIVERSITY CIRCLE
TURLOCK, CA 95382

ehdd.

PIER 1, BAY 2
THE EMBARCADERO
SAN FRANCISCO, CA 94111

INFO@EHDD.COM
+1 415-285-9193

Consultant

PEZZONI ENGINEERING, INC.
CONSULTING ELECTRICAL ENGINEERS
1550 4TH Street, Suite #101 Modesto, CA 95354
PHONE: 209. 554. 4662
HTTP://WWW.PEZENGR.COM

PEZZONI ENGINEERING, INC. © Copyrighted 2020

Stamp

Printing	Date
95% CONSTRUCTION DOCUMENTS	06.25.2021
PERMIT SET	08.16.2021
PERMIT SET - DSA V2	12.15.2021
PERMIT SET - SFM	12.21.2021

Revisions and Description	Date

Scale
AS NOTED

Drawn by
CCM / KP

EHDD Job Number
20020

Sheet Title
SINGLE LINE DIAGRAM

Sheet Number
E7.1 V3

12/15/21 11:45:19 AM F:\20\546 CSUS CHILD DEVELOPMENT CENTER\ENGR\SHEETS\546_E7.1 SINGLE LINE DIAGRAM.DWG cmendez

8/6/2021 5:44:22 PM

PANELBOARD SCHEDULE

PANEL: P1 (2-SECTION 54 CKT. PANEL) **LOCATION:** RM #130
BUS RATING: 225 A. **PHASE:** 3ø **SCCR:** 22kA **NEMA TYPE:** 1
VOLTAGE: 120/208 V. **WIRE:** 4 **BUSSING:** Cu **MOUNTING:** SURFACE

	CKT	DESCRIPTION	BRKR	TYPE	LOAD	A (va)	B (va)	C (va)	LOAD	TYPE	BRKR	DESCRIPTION	CKT	
	1	RECPS -EXTERIOR N/E	20/1	R	540	1280			720	R	20/1	RECPS -135	2	
	3	RECPS -EXTERIOR S	20/1	R	360		1080		720	R	20/1	RECPS -135, 136	4	
	5	RECP -130,131	20/1	R	540			1440	900	R	20/1	RECPS -139	6	
	7	BMS TC (ALC)	20/1	C	500	1220			720	R	20/1	RECPS -136, 139	8	
(R)(LO)	9	FACU CIRCUIT	20/1	C	900		2100		1200	R	20/1	RECP -137 REFRIG	10	(G)
	11	RECP -122 CTR	20/1	R	1200			2400	1200	R	20/1	RECPS -137 CTR	12	
(G)	13	RECP -122 MICRO	20/1	R	1200	2400			1200	R	20/1	RECP -137 MICRO	14	(G)
(G)	15	RECP -122 REFRIG	20/1	R	1200		1920		720	R	20/1	RECPS -138	16	
	17	RECPS -122	20/1	R	900			1980	1080	R	20/1	RECPS -138	18	
	19	RECPS -121, 123	20/1	R	720	1620			900	R	20/1	RECPS -100,103	20	
	21	RECP -124 REFRIG	20/1	R	1200		2100		900	R	20/1	RECPS -100	22	
	23	RECP -125	20/1	R	180			1780	1600	R	20/1	RECP -106 COPIER	24	
	25	DF-1	20/1	C	600	1320			720	R	20/1	RECPS -101, 106	26	
	27	RECPS -129	20/1	R	720		1800		1080	R	20/1	RECP -102	28	
	29	RECPS -140	20/1	R	720			1620	900	R	20/1	RECPS -105 113	30	
	31	RECPS -126, 128	20/1	R	720	1620			900	R	20/1	RECPS -104	32	
	33	RECP -129 CTR	20/1	R	180		1440		1260	R	20/1	RECPS -107	34	
	35	RECP -129 WASHER	20/1	R	1200			1920	720	R	20/1	RECPS -107,108,109	36	
	37	RECP -129 WASHER	20/1	R	1200	2460			1260	R	20/1	RECPS -112,113,114	38	
	39	RECP -129 DRYER	30/2	R	2500		3760		1260	R	20/1	RECPS -108, 111	40	
	41	14-30R	/	R	2500			3400	900	R	20/1	RECPS -110	42	
	43	RECP -129 DRYER	30/2	R	2500	3080			1080	R	20/1	RECPS -110	44	
	45	14-30R	/	R	2500		3400		900	R	20/1	RECPS -118	46	
	47	RECPS -127	20/1	R	900			1940	1040	R	20/1	RECPS -118	48	
	49	RECPS -127	20/1	R	720	1620			900	R	20/1	RECPS -115	50	
	51	RECPS -134	20/1	R	900		1800		900	R	20/1	RECPS -115-17,19	52	
	53	RECPS -134 & FLR	20/1	R	1080			1980	900	R	20/1	RECPS -119	54	
	55	RECPS -132	20/1	R	1080	1800			720	R	20/1	RECPS -120,121	56	
	57	RECP -132 QUAD	20/1	R	360		1260		900	R	20/1	RECPS -119B	58	
	59	RECP -132 QUAD	20/1	R	360			1560	1200	R	20/1	RECP -120A REFRIG	60	(G)
	61	RECP -132 QUAD	20/1	R	360	1560			1200	R	20/1	RECP -120A FREEZER	62	(G)
	63	SPARE	20/1				540		540	R	20/1	RECPS -120, 120A	64	
	65	SPARE	20/1					2180	2180	R	40/2	RECP -120 DISHWASH	66	
	67	RECP -132 QUAD	20/1	R	360	2540			2180	R	/	14-40R	68	
	69	RECP -132 QUAD	20/1	R	360		2540		2180	R	40/2	RECP -120 DISHWASH	70	
	71	AUTO DOOR 100	20/1	R	900			3080	2180	R	/	14-50R	72	
	73	AUTO DOOR 121	20/1	R	900	2500			1600	R	20/1	RECP -120 MICRO	74	
	75	AUTO DOOR 123B	20/1	R	900		2000		1100	R	20/1	RECP -WARM CAB	76	(G)
	77	SPARE	20/1					600	600	R	20/1	RECP -HOOD	78	(G)
	79	SPARE	20/1			1600			1600	R	20/1	RECP -120 MICRO	80	(G)
	81	RECP- 120 OVEN	50/2	R	4180		5380		1200	R	20/1	RECP -120 CTR	82	
	83	14-50R	/	R	4180			5380	1200	R	20/1	RECP -120 CTR	84	
	85	RECP -132	30/2	C	2500	3700			1200	R	20/1	RECP -120 CTR	86	
	87	L6-30R	/	C	2500		3700		1200	R	20/1	RECP -120 CTR	88	
	89	RECP -132	30/2	C	2500			3700	1200	R	20/1	RECP -120 CTR	90	
	91	L6-30R	/	C	2500	2500					20/1	SPARE	92	
	93						0				20/1	SPARE	94	
	95							0			20/1	SPARE	96	
	97												98	
	99												100	
	101												102	
	103												104	
	105												106	
	107												108	
						33300	34800	34940						

CONTINUOUS (C):	15000 VA
NON-CONTINUOUS (N):	2700 VA
RECEP. (R):	49170 VA
MOTOR (M) OR (M1):	0 VA
LIGHTING (L):	0 VA
KITCHEN >1750W (K):	0 VA

MCB: –
MLO: YES

MAX. PHASE ❶125% = 364.0 A.
DEMAND TOTAL = 66.9 kVA
= 185.6 A.

DEMAND CALC. PER ART 220

PANELBOARD SCHEDULE

PANEL: M **LOCATION:** RM #133
BUS RATING: 225 A. **PHASE:** 3ø **SCCR:** 22k **NEMA TYPE:** 1
VOLTAGE: 120/208 V. **WIRE:** 4 **BUSSING:** Cu **MOUNTING:** SURFACE

	CKT	DESCRIPTION	BRKR	TYPE	LOAD	A (va)	B (va)	C (va)	LOAD	TYPE	BRKR	DESCRIPTION	CKT	
(LF)	1	AHU-1 (CKT #1)	100/3	W1	7700	7700					20/3	HHWP-1	2	
	3		/	W1	7700		7700				/		4	
	5		/	W1	7700			7700			/		6	
	7	AHU-1 (CKT #2)	15/1	W	375	375					20/3	HHWP-2	8	
	9	AHU-1 (CKT #3)	15/1	W	1200		1200				/		10	
	11	CU/FC-1	30/2	W1	1500			1500			/		12	
	13		/	W1	1500	2620			1120	W	20/3	CHWP-1	14	
	15	RECPS -133 & CP-1	20/1	R	360		1480		1120	W	/		16	
(LO)	17	FSR	20/1	C	100			1220	1120	W	/		18	
	19	EF-1 & RECP	20/1	W	550	1670			1120	W	20/3	CHWP-2	20	
	21	EF-2 & RECP	20/1	W	880		2000		1120	W	/		22	
	23	EF-3 & RECP	20/1	W	1380			2480	1120	W	/		24	
	25	EF-4 & RECP	20/1	W	550	550					20/1	SPARE	26	
	27	EF-5 & RECP	20/1	W	550		550				20/1	SPARE	28	
	29							0					30	
	31					0							32	
	33						0						34	
	35							0					36	
	37					0							38	
	39						0						40	
	41							0					42	
						12915	12930	12900						

CONTINUOUS (C):	125 VA
NON-CONTINUOUS (N):	0 VA
RECEP. (R):	360 VA
MOTOR (M) OR (M1):	44810 VA
LIGHTING (L):	0 VA
KITCHEN >1750W (K):	0 VA

MCB: YES
MLO: –

MAX. PHASE ❶125% = 134.7 A.
DEMAND TOTAL = 45.3 kVA
= 125.7 A.
❶125% = 157.2 A.

DEMAND CALC. PER ART 220

DEVICE LEGEND

(LO)	INDICATES LOCKING ON DEVICE
(LF)	INDICATES LOCKING OFF DEVICE
(G)	INDICATES GFCI BREAKER
(+)	INDICATES 30mA TRIP GFCI BREAKER
(A)	INDICATES AFCI BREAKER
(AG)	INDICATES AFCI/GFCI BREAKER
(R)	INDICATES RED BREAKER & IDENTIFICATION OF "FIRE ALARM" PER NFPA 72

NOTE: NOT ALL SYMBOLS ARE USED

PANELBOARD SCHEDULE

PANEL: L **LOCATION:** RM #130
BUS RATING: 100 A. **PHASE:** 3ø **SCCR:** 22k **NEMA TYPE:** 1
VOLTAGE: 120/208 V. **WIRE:** 4 **BUSSING:** Cu **MOUNTING:** SURFACE

	CKT	DESCRIPTION	BRKR	TYPE	LOAD	A (va)	B (va)	C (va)	LOAD	TYPE	BRKR	DESCRIPTION	CKT	
(LO)	1	EMERG INVERTER	20/1	L	1500	2760			1280	L	20/1	LTG -121-134	2	
	3	LTG -103,113,121,140	20/1	L	1022		2565		1543	L	20/1	LTG -114-119A,120A	4	
	5	LTG -POLES	20/1	L	710			1925	1215	L	20/1	LTG -135-139	6	
	7	BLUE LT	20/1	L	250	1850			1600	L	20/1	LTG -100-102,104-112	8	
	9	SPARE	20/1	L			0			L	20/1	SPARE	10	
	11	SPARE	20/1	L				0		L	20/1	SPARE	12	
	13					0							14	
	15						0						16	
	17							0					18	
	19					0							20	
	21						0						22	
	23							0					24	
						4610	2565	1925						

CONTINUOUS (C):	1875 VA
NON-CONTINUOUS (N):	0 VA
RECEP. (R):	0 VA
MOTOR (M) OR (M1):	0 VA
LIGHTING (L):	7800 VA
KITCHEN >1750W (K):	0 VA

MCB: –
MLO: YES

MAX. PHASE ❶125% = 48.0 A.
DEMAND TOTAL = 9.5 kVA
= 26.3 A.
❶125% = 32.9 A.

DEMAND CALC. PER ART 220

PANELBOARD SCHEDULE

PANEL: PV SQUARE-D #HCM 27" DISTRIBUTION **LOCATION:** RM 130
BUS RATING: 400 A. **PHASE:** 3ø **SCCR:** 35kA **NEMA TYPE:** 1
VOLTAGE: 277/480 V. **WIRE:** 4 **BUSSING:** Cu **MOUNTING:** SURFACE

CKT	DESCRIPTION	BRKR	TYPE	LOAD	A (va)	B (va)	C (va)	LOAD	TYPE	BRKR	DESCRIPTION	CKT
1	PV INVERTER-1	80/3	C	17800	35600			17800	C	80/3	PV INVERTER-2	2
		/	C	17800		35600		17800	C	/		
		/	C	17800			35600	17800	C	/		
3	SPARE	80/3			0					80/3	SPARE	4
		/				0				/		
		/					0			/		
5	SPARE	50/3			0					50/3	SPARE	6
		/				0				/		
		/					0			/		
					35600	35600	35600					

CONTINUOUS (C):	133000 VA
NON-CONTINUOUS (N):	0 VA
RECEP. (R):	0 VA
MOTOR (M) OR (M1):	0 VA
LIGHTING (L):	0 VA
KITCHEN >1750W (K):	0 VA

MCB: YES
MLO: –

MAX. PHASE ❶125% = 160.6 A.
DEMAND TOTAL = 133.5 kVA
= 160.6 A.
❶125% = 200.7 A.

DEMAND CALC. PER ART 220

APPROVED
DIV. OF THE STATE ARCHITECT
APP: 02-119316 INC:
REVIEWED FOR
SS ☐ FLS ☐ ACS ☑
DATE: 03/24/2022

Division of the State Architect

Office of the State Fire Marshal

OFFICE OF THE STATE FIRE MARSHAL
APPROVED FIRE AND PANIC ONLY
03/14/22
21-0498
Approval of this plan does not authorize or approve any omission or deviation from applicable requirements. Final approval is subject to field inspection. One set of approved plans shall be available on the project site at all times.

CSUS CHILD DEVELOPMENT CENTER

CALIFORNIA STATE UNIVERSITY, STANISLAUS
ONE UNIVERSITY CIRCLE
TURLOCK, CA 95382

ehdd.

PIER 1, BAY 2
THE EMBARCADERO
SAN FRANCISCO, CA 94111

INFO@EHDD.COM
+1 415-285-9193

Consultant

PEZZONI ENGINEERING, INC.
CONSULTING ELECTRICAL ENGINEERS
1150 9TH Street, Suite #1415 Modesto, CA 95354
PHONE: 209. 554. 4492
HTTP://WWW.PEZENGR.COM

PEZZONI ENGINEERING, INC. © Copyrighted 2020

Stamp

Printing	Date
95% CONSTRUCTION DOCUMENTS	06.25.2021
PERMIT SET	08.16.2021
PERMIT SET - DSA V2	12.15.2021
PERMIT SET - SFM	12.21.2021

Revisions and Description	Date

Scale
AS NOTED

Drawn by
CCM / KP

EHDD Job Number
20020

Sheet Title
PANELBOARD SCHEDULES

Sheet Number
E7.2 V3

12/15/21 11:45:23 AM F:\20\546 CSUS CHILD DEVELOPMENT CENTER\ENGR\SHEETS\546_E7.2 PANELBOARD SCHEDULES.DWG cmendez

8/6/2021 5:44:22 PM

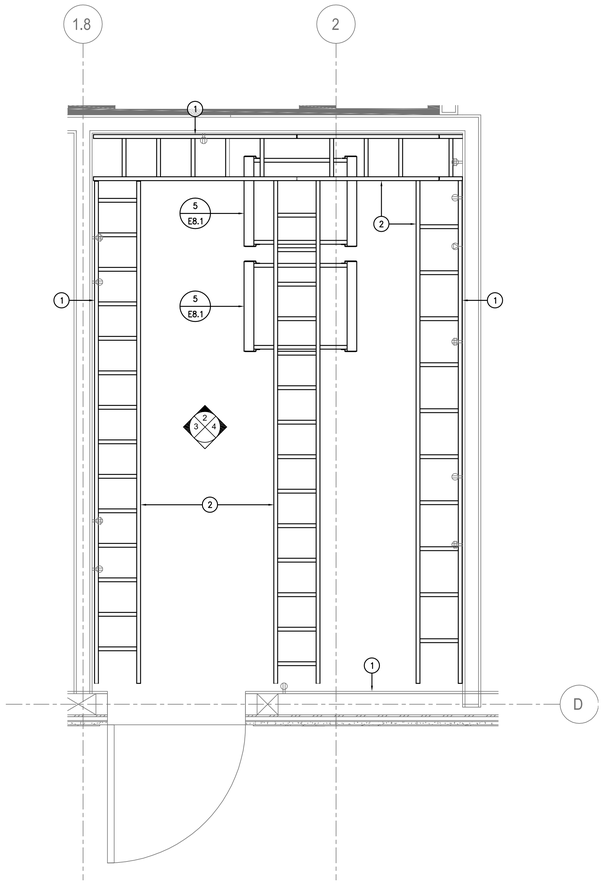

1 COMM ROOM PLAN - ELECTRICAL
SCALE: 3/4"=1'-0"

SCALE IN INCHES
0 3/8" 3/4" 1 1/2"

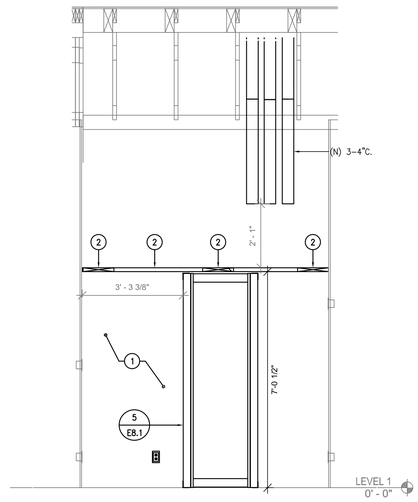

2 NORTH WALL
SCALE: 1/2"=1'-0"

SCALE IN INCHES
0 1/4" 1/2" 1"

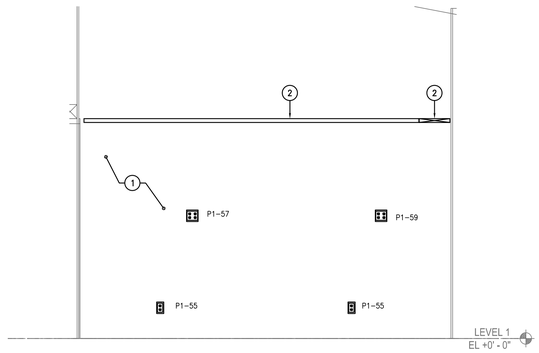

3 WEST WALL
SCALE: 1/2"=1'-0"

SCALE IN INCHES
0 1/4" 1/2" 1"

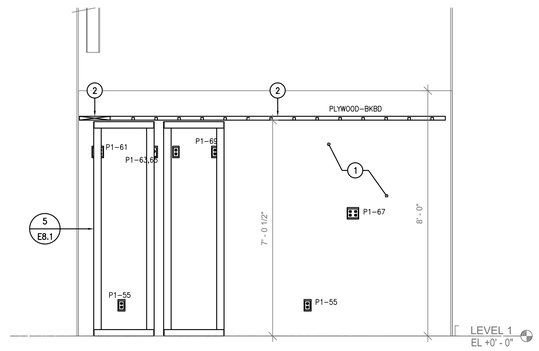

4 EAST WALL
SCALE: 1/2"=1'-0"

SCALE IN INCHES
0 1/4" 1/2" 1"

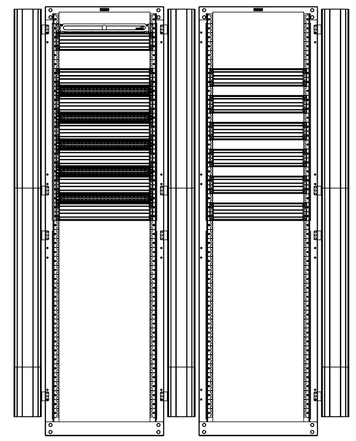

5 COMM RACK ELEVATIONS
SCALE: 1"=1'-0"

PLAN NOTES:

1. 3/4" PLYWOOD BACKBOARD – 4'X8' FR RATED, SEE DETAIL 2/E9.1.
2. (N) 12" LADDER WAY CPI OR EQUAL.

Division of the State Ar

APPROVED
DIV. OF THE STATE ARCHITECT
APP: 02-119316 INC:
REVIEWED FOR
SS ☐ FLS ☐ ACS ☑
DATE: 03/24/2022

Office of the State Fire Marshal

OFFICE OF THE STATE FIRE MARSHAL
APPROVED FIRE AND PANIC ONLY
03/14/22
21-0498
Approval of this plan does not authorize or approve any omission or deviation from applicable regulations. Final approval is subject to field inspection. One set of approved plans shall be available on the project site at all times.

CSUS CHILD DEVELOPMENT CENTER

CALIFORNIA STATE UNIVERSITY, STANISLAUS
ONE UNIVERSITY CIRCLE
TURLOCK, CA 95382

ehdd.

PIER 1, BAY 2
THE EMBARCADERO
SAN FRANCISCO, CA 94111

INFO@EHDD.COM
+1 415-285-9193

Consultant

PEZZONI ENGINEERING, INC.
CONSULTING ELECTRICAL ENGINEERS
1150 9TH Street, Suite #1415 Modesto, CA 95354
PHONE: 209 - 554 - 4602
HTTP://WWW.PEZENGR.COM

PEZZONI ENGINEERING, INC. © Copyrighted 2020

Stamp

Printing	Date
95% CONSTRUCTION DOCUMENTS	06.25.2021
PERMIT SET	08.16.2021
PERMIT SET - DSA V2	12.15.2021
PERMIT SET - SFM	12.21.2021

Revisions and Description	Date

Scale
AS NOTED

Drawn by
CCM / KP

EHDD Job Number
20020

Sheet Title
DETAILS

Sheet Number
E8.1 V3

12/15/21 11:45:30 AM F:\20\546 CSUS CHILD DEVELOPMENT CENTER\ENGR\SHEETS\546_E8.1 ELECTRICAL ELEVATIONS- COMM RMDWG.DWG cmendez

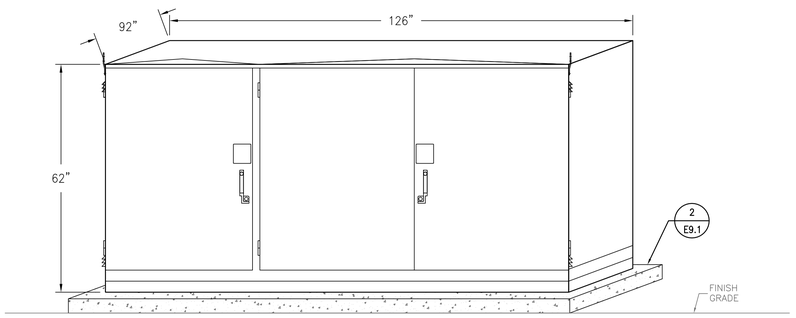

1 15KV DEAD FRONT SWITCH CABINET (6-BAY)
SCALE: NONE

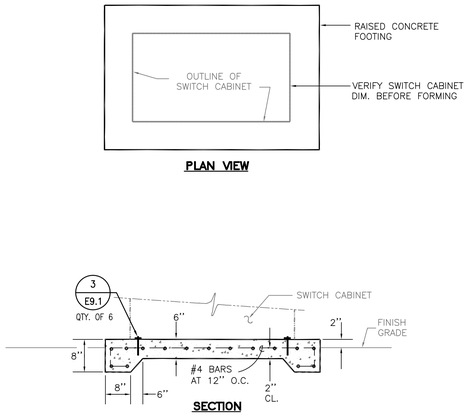

2 SWITCH CABINET FOUNDATION
SCALE: N.T.S.

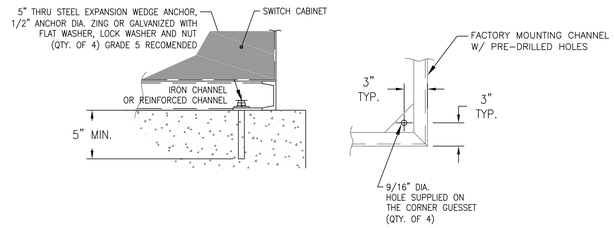

3 SWITCH CABINET ANCHORAGE
SCALE: N.T.S.

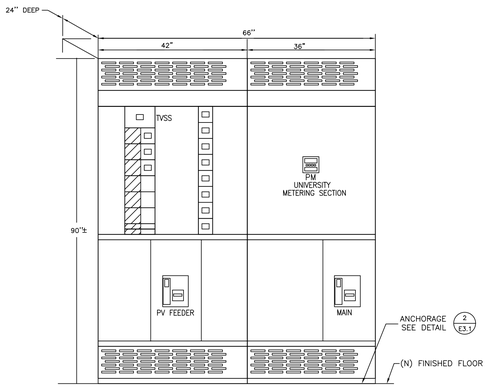

4 SWITCHBOARD 'SWBD'
SCALE: N.T.S.

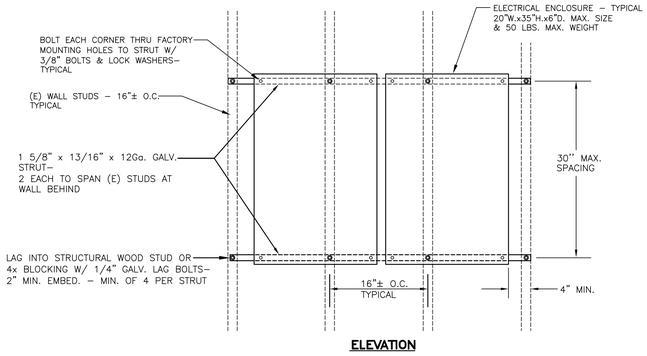

5 RECESSED PANEL MOUNTING
SCALE: N.T.S.

Division of the State Ar

APPROVED
DIV. OF THE STATE ARCHITECT
APP: 02-119316 INC:
REVIEWED FOR
SS☐ FLS☐ ACS☑
DATE: 03/24/2022

Office of the State Fire Marshal

OFFICE OF THE STATE FIRE MARSHAL
APPROVED FIRE AND PANIC ONLY
03/14/22
21-0498
Approval of this plan does not authorize or approve any omission or deviation from applicable regulations. Final approval is subject to field inspection. One set of approved plans shall be available on the project site at all times.

CSUS CHILD DEVELOPMENT CENTER

CALIFORNIA STATE UNIVERSITY, STANISLAUS
ONE UNIVERSITY CIRCLE
TURLOCK, CA 95382

ehdd.

PIER 1, BAY 2
THE EMBARCADERO
SAN FRANCISCO, CA 94111

INFO@EHDD.COM
+1 415-285-9193

Consultant

PEZZONI ENGINEERING, INC.
CONSULTING ELECTRICAL ENGINEERS
1150 9TH Street, Suite #1415 Modesto, CA 95354
PHONE: 209 - 554 - 4602
HTTP://WWW.PEZENGR.COM

PEZZONI ENGINEERING, INC. © Copyrighted 2020

Stamp

Printing	Date
95% CONSTRUCTION DOCUMENTS	06.25.2021
PERMIT SET	08.16.2021
PERMIT SET - DSA V2	12.15.2021
PERMIT SET - SFM	12.21.2021

Revisions and Description	Date

Scale
AS NOTED

Drawn by
CCM / KP

EHDD Job Number
20020

Sheet Title
DETAILS

Sheet Number
E9.1 V3

8/6/2021 5:44:22 PM

12/15/21 11:45:35 AM F:\20\546 CSUS CHILD DEVELOPMENT CENTER\ENGR\SHEETS\546_E9.0 ELECTRICAL DETAILS.DWG cmendez

8/6/2021 5:44:22 PM

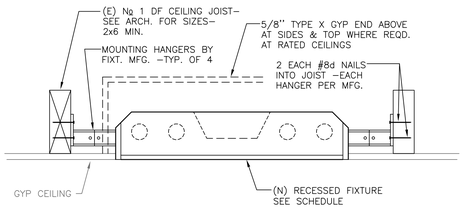

1 RECESSED LED FIXTURE –TYPICAL

SCALE: N.T.S.

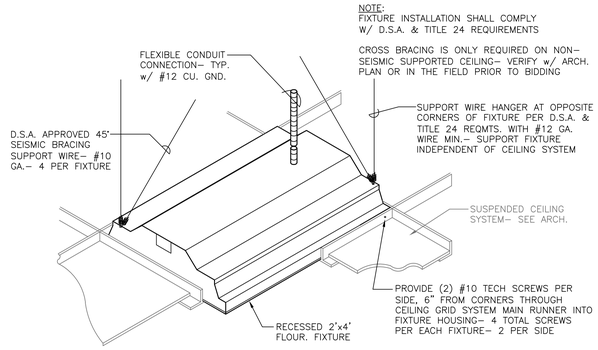

2 RECESSED FLUORESCENT FIXTURE AT SUSPENDED CEILING

SCALE: N.T.S.

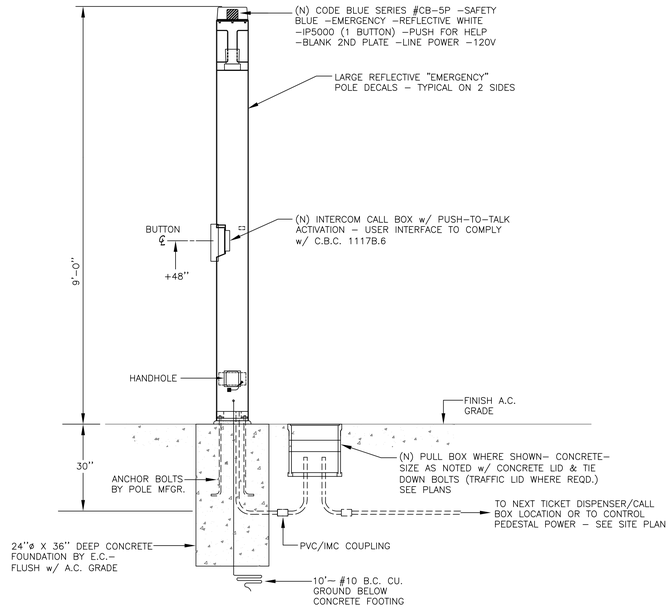

3 EMERGENCY CALL LIGHT w/ CALLBOX

SCALE: NONE

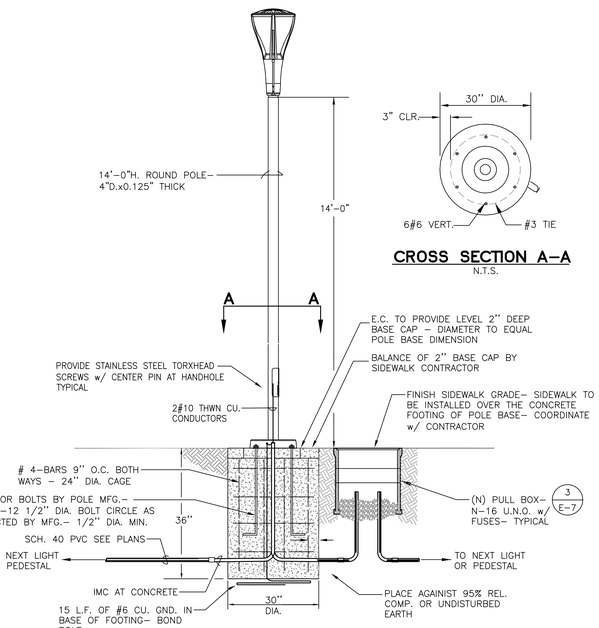

4 PEDESTRIAN ELECTROLIER, POLE & BASE– TYPICAL

SCALE: N.T.S.

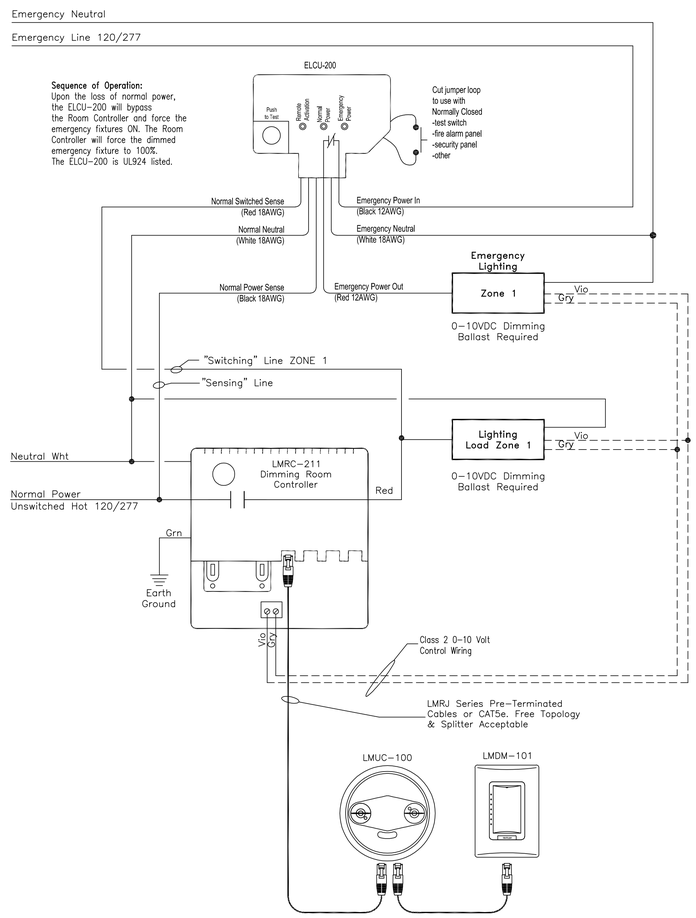

5 DLM TYPICAL WIRING DIAGRAMS

SCALE: N.T.S.

12/15/21 11:45:36 AM F:\20\546 CSUS CHILD DEVELOPMENT CENTER\ENGR\SHEETS\546_E9.0 ELECTRICAL DETAILS.DWG cmendez

Division of the State Ar

APPROVED
DIV. OF THE STATE ARCHITECT
APP: 02-119316 INC:
REVIEWED FOR
SS☐ FLS☐ ACS☑
DATE: 03/24/2022

Office of the State Fire Marshal

OFFICE OF THE STATE FIRE MARSHAL
APPROVED FIRE AND PANIC ONLY
03/14/22
21-0498
Approval of this plan does not authorize or approve any omission or deviation from applicable requirements. Final approval is subject to field inspection. One set of approved plans shall be available on the project site at all times.

CSUS CHILD DEVELOPMENT CENTER

CALIFORNIA STATE UNIVERSITY, STANISLAUS
ONE UNIVERSITY CIRCLE
TURLOCK, CA 95382

ehdd.

PIER 1, BAY 2
THE EMBARCADERO
SAN FRANCISCO, CA 94111

INFO@EHDD.COM
+1 415-285-9193

Consultant

PEZZONI ENGINEERING, INC.
CONSULTING ELECTRICAL ENGINEERS
1100 PT Road, Suite #1031 Roberts, CA 95684
PHONE: 209.754.4602
HTTP://WWW.PEZENGR.COM

PEZZONI ENGINEERING, INC. © Copyrighted 2020

Stamp

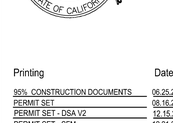

Printing	Date
95% CONSTRUCTION DOCUMENTS	06.25.2021
PERMIT SET	09.16.2021
PERMIT SET - DSA V2	12.15.2021
PERMIT SET - SFM	12.21.2021

Revisions and Description	Date

Scale
AS NOTED

Drawn by
CCM / KP

EHDD Job Number
20020

Sheet Title
DETAILS

Sheet Number
E9.2 V3

8/6/2021 5:44:22 PM

NOTE:
E.C. SHALL INSTALL CONDUITS THRU ROOF & PROVIDE PROPERLY SIZED FLASHING ASSEMBLY– LEAVE ON CONDUITS AT ROOF AT PENETRATIONS, FOR INSTALLATION BY ROOFING CONTRACTOR– ROOFING CONTRACTOR SHALL BE RESPONSIBLE FOR INSTALLING, SEALING PENETRATIONS, & FLASHING– E.C. SHALL COOR. W/ ROOFING CONTRACTOR & BE RESPONSIBLE FOR DAMAGE DUE TO LEAKS AFTER PENETRATION IS MADE UNTIL ROOFING CONTRACTOR COMPLETES THE INSTALLATION.

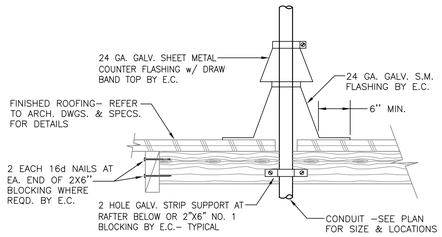

CAUTION – DO NOT DISTURB ROOFING UNTIL ASBESTOS ABATEMENT IS COMPLETE. OBTAIN WRITTEN CLEARANCE FROM THE DISTRICT

1 CONDUIT PENETRATION AT ROOF –TYP.
SCALE: N.T.S.

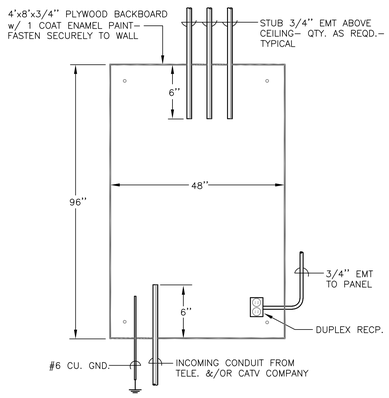

2 TELEPHONE BACKBOARD
SCALE: N.T.S.

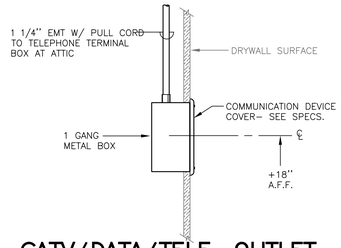

3 CATV/DATA/TELE. OUTLET
SCALE: N.T.S.

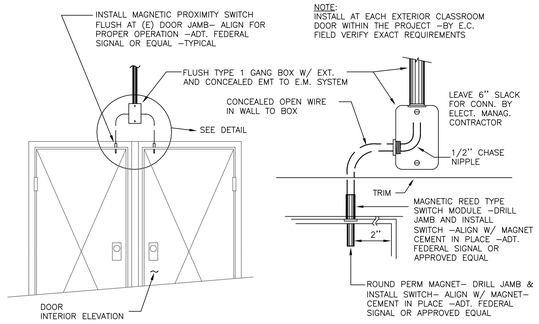

NOTE:
INSTALL AT EACH EXTERIOR CLASSROOM DOOR WITHIN THE PROJECT –BY E.C. FIELD VERIFY EXACT REQUIREMENTS

4 MAGNETIC DOOR SWITCH –TYPICAL
SCALE: NONE

12/15/21 11:45:36 AM F:\20\546 CSUS CHILD DEVELOPMENT CENTER\ENGR\SHEETS\546_E9.0 ELECTRICAL DETAILS.DWG cmendez

Division of the State Architect
APPROVED
DIV. OF THE STATE ARCHITECT
APP: 02-119316 INC:
REVIEWED FOR
SS☐ FLS☐ ACS☑
DATE: 03/24/2022

Office of the State Fire Marshal

OFFICE OF THE STATE FIRE MARSHAL
APPROVED FIRE AND PANIC ONLY
03/14/22
21-0498
Approval of this plan does not authorize or approve any omission or deviation from applicable requirements. Final approval is subject to field inspection. One set of approved plans shall be available on the project site at all times.

CSUS CHILD DEVELOPMENT CENTER

CALIFORNIA STATE UNIVERSITY, STANISLAUS
ONE UNIVERSITY CIRCLE
TURLOCK, CA 95382

ehdd.

PIER 1, BAY 2
THE EMBARCADERO
SAN FRANCISCO, CA 94111

INFO@EHDD.COM
+1 415-285-9193

Consultant

PEZZONI ENGINEERING, INC.
CONSULTING ELECTRICAL ENGINEERS
1501 9TH Street, Suite #105 Modesto, CA 95354
PHONE: 209 . 554 . 4602
HTTP://WWW.PEZENGR.COM

PEZZONI ENGINEERING, INC. © Copyrighted 2020

Stamp

Printing	Date
95% CONSTRUCTION DOCUMENTS	06.25.2021
PERMIT SET	08.16.2021
PERMIT SET - DSA V2	12.15.2021
PERMIT SET - SFM	12.21.2021

Revisions and Description	Date

Scale
AS NOTED

Drawn by
CCM / KP

EHDD Job Number
20020

Sheet Title
DETAILS

Sheet Number
E9.3 V3

8/6/2021 5:44:22 PM

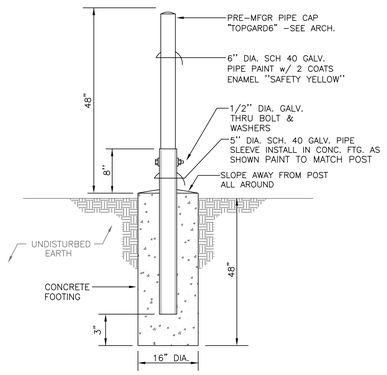

1 REMOVABLE GUARD POST (TYP.)

SCALE: NTS

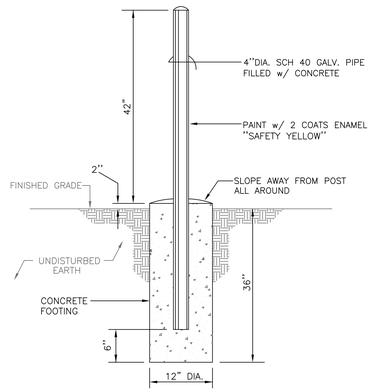

2 NON-MOVABLE GUARD POST (TYP.)

SCALE: NTS

TRANSFORMER DATA					XFMER. FTG. DIMENSIONS			HILTI INFO	
XFMER. SIZE	C.G.	W.	D.	WT.	F.W.	F.D.	F.H.	SIZE	TEST *
300	38"	41"	32"	1450 LBS.	60"	50"	24"	1/2"	1950#

* TEST AT 50% OF TENSION TO VALUES SHOWN
DATA BASED UPON SQUARE-D 7400 Cu C.P. XFMER

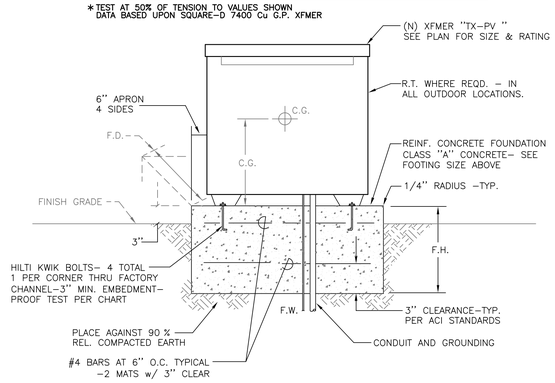

3 (N) PAD MTD. DRY TYPE TRANSFORMER

SCALE: N.T.S.

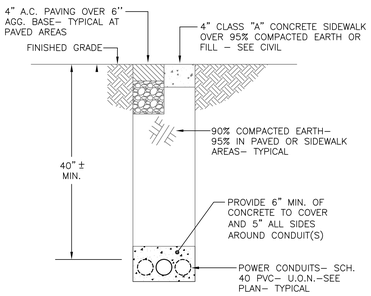

4 ELECTRICAL TRENCH SECTION (TYP.)

SCALE: NTS

NOTE:
1. ADDED HEADROOM IS ACHIEVED BY 6" GRADE RINGS (EXTENSIONS).
2. DEEP RECESS ALLOWS 7'-0" SPLICING LENGTH

REINFORCEMENT:
TRAFFIC USE-H-20 BRIDGE LOADING
PARKWAY USE-NONE REQUIRED

INSTALLATION:
PULL BOX TO BE PLACED ON 6" OF COMPACTED ROCK OR SAND BASE TO INSURE UNIFORM DISTRIBUTION OF SOIL PRESSURE ON FLOOR

SPECIFICATIONS:
CONCRETE TO BE CLASS "A" (3,000 P.S.I.) TYPE. STEEL PRECISION BUILT FORMS ARE USED TO ASSURE TRUE AND CONSTANT ALIGNMENT. 1" CHAMFER ON ALL INSIDE CORNERS.

EXCAVATION SIZE:
52" MIN. X 97 MIN. X DEPTH TO SUIT JOB

WEIGHT:
BOX ONLY = 3480 LBS.

5 3' X 5' CONCRETE VAULT

SCALE: N.T.S.

12/15/21 11:45:37 AM F:\20\546 CSUS CHILD DEVELOPMENT CENTER\ENGR\SHEETS\546_E9.0 ELECTRICAL DETAILS.DWG cmendez

Division of the State Ar

APPROVED
DIV. OF THE STATE ARCHITECT
APP: 02-119316 INC:
REVIEWED FOR
SS☐ FLS☐ ACS☑
DATE: 03/24/2022

Office of the State Fire Marshal

OFFICE OF THE STATE FIRE MARSHAL
APPROVED FIRE AND PANIC ONLY
03/14/22
21-0498
Approval of this plan does not authorize or approve any omission or deviation from applicable regulations. Final approval is subject to field inspection. One set of approved plans shall be available on the project site at all times.

CSUS CHILD DEVELOPMENT CENTER

CALIFORNIA STATE
UNIVERSITY, STANISLAUS
ONE UNIVERSITY CIRCLE
TURLOCK, CA 95382

ehdd.

PIER 1, BAY 2
THE EMBARCADERO
SAN FRANCISCO, CA 94111

INFO@EHDD.COM
+1 415-285-9193

Consultant

PEZZONI
ENGINEERING, INC.
CONSULTING ELECTRICAL ENGINEERS
1100 3RD Street, Suite #101 Modesto, CA 95354
PHONE: 209 .554. 4602
HTTP://WWW.PEZZNGR.COM

PEZZONI ENGINEERING, INC. © Copyrighted 2020

Stamp

Printing	Date
95% CONSTRUCTION DOCUMENTS	06.25.2021
PERMIT SET	08.16.2021
PERMIT SET - DSA V2	12.15.2021
PERMIT SET - SFM	12.21.2021

Revisions and Description	Date

Scale
AS NOTED

Drawn by
CCM / KP

EHDD Job Number
20020

Sheet Title
DETAILS

Sheet Number
E9.4 V3

8/6/2021 5:44:22 PM

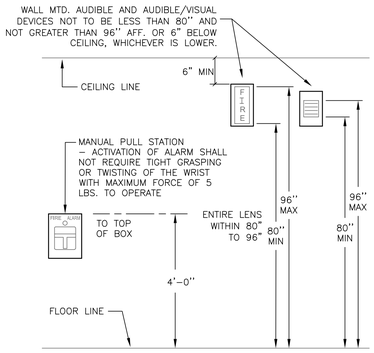

1 DEVICE ELEVATION DETAIL

SCALE: N.T.S.

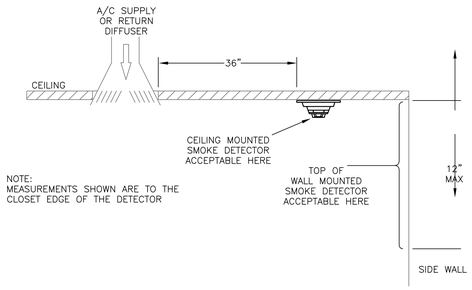

2 PROPER MOUNTING FOR SMOKE DETECTORS

SCALE: N.T.S.

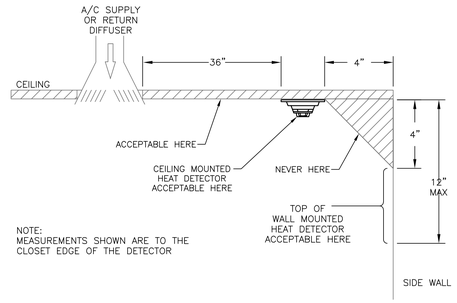

3 PROPER MOUNTING FOR HEAT DETECTORS

SCALE: N.T.S.

12/15/21 11:45:37 AM F:\20\546 CSUS CHILD DEVELOPMENT CENTER\ENGR\SHEETS\546_E9.0 ELECTRICAL DETAILS.DWG cmendez

Division of the State Architect

APPROVED
DIV. OF THE STATE ARCHITECT
APP: 02-119316 INC:
REVIEWED FOR
SS☐ FLS☐ ACS☑
DATE: 03/24/2022

Office of the State Fire Marshal

OFFICE OF THE STATE FIRE MARSHAL
APPROVED FIRE AND PANIC ONLY
03/14/22
21-0498
Approval of this plan does not authorize or approve any omission or deviation from applicable requirements. Final approval is subject to field inspection. One set of approved plans shall be available on the project site at all times.

CSUS CHILD DEVELOPMENT CENTER

CALIFORNIA STATE UNIVERSITY, STANISLAUS
ONE UNIVERSITY CIRCLE
TURLOCK, CA 95382

ehdd.

PIER 1, BAY 2
THE EMBARCADERO
SAN FRANCISCO, CA 94111

INFO@EHDD.COM
+1 415-285-9193

Consultant

PEZZONI ENGINEERING, INC.
CONSULTING ELECTRICAL ENGINEERS
1150 9TH Street, Suite #1415 Modesto, CA 95354
PHONE: 209 . 554 . 4492
HTTP://WWW.PEZENGR.COM

PEZZONI ENGINEERING, INC. © Copyrighted 2020

Stamp

Printing	Date
95% CONSTRUCTION DOCUMENTS	06.25.2021
PERMIT SET	08.16.2021
PERMIT SET - DSA V2	12.15.2021
PERMIT SET - SFM	12.21.2021

Revisions and Description	Date

Scale
AS NOTED

Drawn by
CCM / KP

EHDD Job Number
20020

Sheet Title
DETAILS

Sheet Number
E9.5 V3

STATE OF CALIFORNIA
Electrical Power Distribution
NRCC-ELC-E (Created 1/20) CALIFORNIA ENERGY COMMISSION

CERTIFICATE OF COMPLIANCE		NRCC-ELC-E
Project Name: CSU STANISLAUS CDC	Report Page:	Page 1 of 5
Project Address: 1 UNIVERSITY CIRCLE	Date Prepared:	6/21/21

This document is used to demonstrate compliance with mandatory requirements in §130.5 for electrical systems in newly constructed nonresidential, high-rise residential and hotel/motel occupancies. Additions and alterations to electrical service systems in these occupancies will also use this document to demonstrate compliance per §141.0(a) or §141.0(b)2F for alterations.

A. GENERAL INFORMATION

01 Project Location (city)	TURLOCK	02 Occupancy Types Within Project:			
☐ Office	☐ Retail	☐ Warehouse	☐ Hotel/ Motel	☑ School	☐ Support Areas
☐ Parking Garage	☐ High-Rise Residential	☐ Relocatable	☐ Healthcare Facilities	☐ Other (Write In):	

B. PROJECT SCOPE

Table Instructions: Include any electrical service systems that are within the scope of the permit application.

01 Electrical Service Designation/ Description	02 Scope of Work[1]	03 Rating (kVA)	04 Utility Provided Metering System Exception to §130.5(a)[2]	05 System subject to CA Elec Code Article 517 Exception to §130.5(a)&(b)	06 Demand Response Controls
SWBD	New electrical service equipment & meter		☐	☐	Where required, demand response controls must be specified which are capable of receiving and automatically responding to at least one standards based messaging protocol which enables demand response after receiving a demand response signal. Sections §120.2, §130.1 and §130.3 and compliance documents NRCC-MCH, NRCC-LTI and NRCC-LTS will indicate when demand response controls are required.

[1] *FOOTNOTES: Adding only new feeders and branch circuits triggers Voltage Drop 130.5(c), no other requirements from 130.5 are required.*
[2] *Applicable if the utility company is providing a metering system that indicates instantaneous kW demand and kWh for a utility-defined period.*

C. COMPLIANCE RESULTS

Table Instructions: If ths table says "DOES NOT COMPLY" refer to Table D. for guidance and review the Table that indicates "No".

01		02		03		04	05
Service Electrical Metering §130.5(a)	AND	Separation for Monitoring §130.5(b)	AND	Voltage Drop §130.5(c)	AND	Controlled Receptacles §130.5(d)	**Compliance Results**
(See Table F)		(See Table G)		(See Table H)		(See Table I)	
No	AND	Yes	AND	Yes	AND	No	**DOES NOT COMPLY**

STATE OF CALIFORNIA
Electrical Power Distribution
NRCC-ELC-E (Created 1/20) CALIFORNIA ENERGY COMMISSION

CERTIFICATE OF COMPLIANCE		NRCC-ELC-E
Project Name: CSU STANISLAUS CDC	Report Page:	Page 2 of 5
Project Address: 1 UNIVERSITY CIRCLE	Date Prepared:	6/21/21

D. EXCEPTIONAL CONDITIONS

This table is auto-filled with uneditable comments because of selections made or data entered in tables throughout the form.

Table H. indicates voltage drop calculations will be provided by the contractor.

E. ADDITIONAL REMARKS

This table includes remarks made by the permit applicant to the Authority Having Jurisdiction.

F. SERVICE ELECTRICAL METERING

Table Instructions: Complete the table below for new or replacement electrical service systems OR equipment to demonstrate compliance with §130.5(a).

01	02	03				04	05	
		Required Metering Capabilities per Table 130.5-A					Field Inspector	
Electrical Service Designation/ Description	Rating (kVA)	Instantaneous Demand (kW)	Historical Peak Demand (kW)	Tracking kWh for user-defined period	kWh per rate period	Location of Requirements in Construction Documents	Pass	Fail
SWBD		☑	☐	☑	☐		☐	☐

G. SEPARATION OF ELECTRICAL CIRCUITS FOR ENERGY MONITORING

Table Instructions: Complete this table for entirely new or complete replacement electrical power distribution systems to demonstrate compliance with §130.5(b). Using the dropdown choices in column 01, indicate the load types included for each service. Any load types that are not included in the service do not need to be shown.

Electrical Service Designation/Description: SWBD

01 Load Type per Table 130.5-B[1]	02 Minimum Required Separation of Load per Table 130.5-B	03 Compliance Method[2]	04 Location of Requirements in Construction Documents	05 Field Inspector Pass	Fail
Lighting including exit, egress and exterior	Not required	Method 4	E7.1	☐	☐
HVAC systems and components	Not required	Method 4	E7.1	☐	☐
Plug Loads and appliances < 25kVA	Not required	Method 4	E7.1	☐	☐
Renewable power sources (net or total)	Each group	Method 4	E7.1	☐	☐

Table Continued

STATE OF CALIFORNIA
Electrical Power Distribution
NRCC-ELC-E (Created 1/20) CALIFORNIA ENERGY COMMISSION

CERTIFICATE OF COMPLIANCE		NRCC-ELC-E
Project Name: CSU STANISLAUS CDC	Report Page:	Page 3 of 5
Project Address: 1 UNIVERSITY CIRCLE	Date Prepared:	6/21/21

01 Load Type per Table 130.5-B[1]	02 Minimum Required Separation of Load per Table 130.5-B	03 Compliance Method[2]	04 Location of Requirements in Construction Documents	05 Field Inspector Pass	Fail

** NOTES: If "Other*" is selected under Compliance Method above, please indicate how compliance has been achieved in the space provided below.*

[1] *FOOTNOTES: For each separate load type, up to 10% of the connected load may be of any type.*
[2] *Method 1: Switchboards/ motor control centers/ panelboard loads disaggregated for each load type*
Method 2: Switchboards/ motor control centers/ panelboard supply other distribution equipment with loads disaggregated for each load type
Method 3: Branch circuits serve load types individually & provisions for adding future branch curcuit monitoring
Method 4: Complete metering system measures and reports loads by type
See Chapter 8 of the Nonresidential Compliance Manual for more detail on Compliance Methods.

H. VOLTAGE DROP

Table Instructions: Please complete this table for entirely new or complete replacement electrical power distribution systems, or alterations that add, modify or replace both feeders and branch circuits to demonstrate compliance with §130.5(c). For alterations, only the altered circuits must demonstrate compliance per §141.0(b)2Pii.

01 Electrical Service Designation/ Description	02 Combined Voltage Drop on Installed Feeder/Branch Circuit Conductors Compliance Method	03 Location of Voltage Drop Calculations[1]	04 Sheet Number for Voltage Drop Calculations in Construction Documents	05 Field Inspector Pass	Fail
SWBD	☑ Voltage drop < 5% ☐ Permitted by CA Elec Code (Exception to §130.5(c))*	Contractor Responsible		☐	☐

**NOTES if "Permitted by CA Elec Code*" is selected under Compliance Method above, please indicate where the exception applies in the space provided below.*

[1] *FOOTNOTES: Voltage drop calculations may be attached to the permit application outside the construction documents if allowed by the Authority Having Jurisdiction. Select "attached" if applicable. If calculations will be the responsibility of the installing contractor, select "Contractor Responsible".*

I. CIRCUIT CONTROLS FOR 120-VOLT RECEPTACLES AND CONTROLLED RECEPTACLES

Table Instructions: Please complete this table for entirely new or complete replacement electrical power distribution systems to demonstrate compliance with §130.5(d). Both controlled and uncontrolled receptacles must be provided in office areas, lobbies, conference rooms, kitchen areas in office spaces, copy rooms and hotel/motel guest rooms.

Table Continued

STATE OF CALIFORNIA
Electrical Power Distribution
NRCC-ELC-E (Created 1/20) CALIFORNIA ENERGY COMMISSION

CERTIFICATE OF COMPLIANCE		NRCC-ELC-E
Project Name: CSU STANISLAUS CDC	Report Page:	Page 4 of 5
Project Address: 1 UNIVERSITY CIRCLE	Date Prepared:	6/21/21

01 Room Name or Description	02 Location/ Type of Controlled Receptacles	03 Shut-Off Controls	04 Permanent Durable Marking Will be Used	05 Location of Requirements in Construction Documents	06 Field Inspector Pass	Fail
100, 101, 102, 103, 104, 105, 134	Within 6ft of uncontrolled AND Split-wired receptacles	Occupancy Sensor	☐	E2.1	☐	☐
				Add Row	Remove Last	

** If "Other*" is selected under Compliance Method above, please indicate how compliance has been achieved in the space provided below.*

J. DECLARATION OF REQUIRED CERTIFICATES OF INSTALLATION

Table Instructions: Selections have been made based on information provided in previous tables of this document. If any selection needs to be changed, please explain why in Table E. Additional Remarks. These documents must be provided to the building inspector during construction and can be found online at https://ww2.energy.ca.gov/title24/2019standards/2019_compliance_documents/Nonresidential_Documents/NRCI/

YES	NO	Form/Title	Field Inspector Pass	Fail
◉	○	NRCI-ELC-01-E - Must be submitted for all buildings.	☐	☐

K. DECLARATION OF REQUIRED CERTIFICATES OF ACCEPTANCE

There are no Certificates of Acceptance applicable to electrical power distribution requirements.

STATE OF CALIFORNIA
Electrical Power Distribution
NRCC-ELC-E (Created 1/20) CALIFORNIA ENERGY COMMISSION

CERTIFICATE OF COMPLIANCE		NRCC-ELC-E
Project Name: CSU STANISLAUS CDC	Report Page:	Page 5 of 5
Project Address: 1 UNIVERSITY CIRCLE	Date Prepared:	6/21/21

DOCUMENTATION AUTHOR'S DECLARATION STATEMENT

Documentation Author Name:	KEVIN PEZZONI	Documentation Author Signature:	
Company:	PEZZONI ENGINEERING, INC.	Signature Date:	6/21/21
Address:	1150 9th Street #1415	CEA/ HERS Certification Identification (if applicable):	
City/State/Zip:	MODESTO, CA 95354	Phone:	209.554.4602

RESPONSIBLE PERSON'S DECLARATION STATEMENT
I certify the following under penalty of perjury, under the laws of the State of California:
1. The information provided on this Certificate of Compliance is true and correct.
2. I am eligible under Division 3 of the Business and Professions Code to accept responsibility for the building design or system design identified on this Certificate of Compliance (responsible designer)
3. The energy features and performance specifications, materials, components, and manufactured devices for the building design or system design identified on this Certificate of Compliance conform to the requirements of Title 24, Part 1 and Part 6 of the California Code of Regulations.
4. The building design features or system design features identified on this Certificate of Compliance are consistent with the information provided on other applicable compliance documents, worksheets, calculations, plans and specifications submitted to the enforcement agency for approval with this building permit application.
5. I will ensure that a completed signed copy of this Certificate of Compliance shall be made available with the building permit(s) issued for the building, and made available to the enforcement agency for all applicable inspections. I understand that a completed signed copy of this Certificate of Compliance is required to be included with the documentation the builder provides to the building owner at occupancy.

Responsible Designer Name:	KEVIN PEZZONI	Responsible Designer Signature:	
Company :	PEZZONI ENGINEERING, INC.	Date Signed:	6/21/21
Address:	1150 9th Street #1415	License:	E16269
City/State/Zip:	MODESTO, CA 95354	Phone:	209.554.4602

8/6/2021 5:44:22 PM
12/15/21 11:45:42 AM F:\20\546 CSUS CHILD DEVELOPMENT CENTER\ENGR\SHEETS\546_E10.1 ENERGY COMPLIANCE FORMS.DWG cmendez

Division of the State Architect
APPROVED
DIV. OF THE STATE ARCHITECT
APP: 02-119316 INC:
REVIEWED FOR
SS☐ FLS☐ ACS☑
DATE: 03/24/2022

Office of the State Fire Marshal
OFFICE OF THE STATE FIRE MARSHAL
APPROVED FIRE AND PANIC ONLY
03/14/22
21-0498
Approval of this plan does not authorize or approve any omission or deviation from applicable requirements. Final approval is subject to field inspection. One set of approved plans shall be available on the project site at all times.

CSUS CHILD DEVELOPMENT CENTER

CALIFORNIA STATE UNIVERSITY, STANISLAUS
ONE UNIVERSITY CIRCLE
TURLOCK, CA 95382

ehdd.
PIER 1, BAY 2
THE EMBARCADERO
SAN FRANCISCO, CA 94111
INFO@EHDD.COM
+1 415-285-9193

Consultant
PEZZONI ENGINEERING, INC.
CONSULTING ELECTRICAL ENGINEERS
1150 9TH Street, Suite #1415 Modesto, CA 95354
PHONE: 209. 554. 4602
HTTP://WWW.PEZENGR.COM

PEZZONI ENGINEERING, INC. © Copyrighted 2020

Stamp

Printing	Date
95% CONSTRUCTION DOCUMENTS	06.25.2021
PERMIT SET	08.16.2021
PERMIT SET - DSA V2	12.15.2021
PERMIT SET - SFM	12.21.2021

Revisions and Description	Date

Scale
AS NOTED

Drawn by
CCM / KP

EHDD Job Number
20020

Sheet Title
NRCC-ELEC

Sheet Number
E10.1V3

8/6/2021 5:44:22 PM

12/15/21 11:45:43 AM F:\20\546 CSUS CHILD DEVELOPMENT CENTER\ENGR\SHEETS\546_E10.1 ENERGY COMPLIANCE FORMS.DWG cmendez

STATE OF CALIFORNIA
Indoor Lighting
NRCC-LTI-E (Created 7/19) CALIFORNIA ENERGY COMMISSION

CERTIFICATE OF COMPLIANCE NRCC-LTI-E

This document is used to demonstrate compliance with requirements in §110.9, §110.12(c), §130.0, §130.1, §140.6, and §141.0(b)2 for indoor lighting scopes using the prescriptive path.

Project Name: CSU STANISLAUS CDC | Report Page: Page 1 of 8
Project Address: 1 UNIVERSITY CIRCLE | Date Prepared: 6/21/21

A. GENERAL INFORMATION

01	Project Location (city)	TURLOCK	04	Total Conditioned Floor Area (ft²)	14,336
02	Climate Zone	12	05	Total Unconditioned Floor Area (ft²)	
03	Occupancy Types Within Project (select all that apply):		06	# of Stories (Habitable Above Grade)	1

☐ Office ☐ Retail ☐ Warehouse ☐ Hotel/Motel ☑ School ☐ Support Areas
☐ Parking Garage ☐ High-Rise Residential ☐ Relocatable ☐ Healthcare ☐ Other (write in):

B. PROJECT SCOPE

Table Instructions: Include any lighting systems that are within the scope of the permit application and are demonstrating compliance using the prescriptive path outlined in §140.6 or §141.0(b)2 for alterations. WARNING: Changing the Calculation Method in this table will result in the deletion of data previously input. If you need to change the calculation method, please open a new form or use "Save As".

Scope of Work	Conditioned Spaces		Unconditioned Spaces	
01	02	03	04	05
My Project Consists of (check all that apply):	Calculation Method	Area (ft²)	Calculation Method	Area (ft²)
☑ New Lighting System	Complete Building	14,336		
☐ Altered Lighting System				
Total Area of Work (ft²)	**14,336**			

C. COMPLIANCE RESULTS

Table Instructions: If any cell on this table says "DOES NOT COMPLY" or "COMPLIES with Exceptional Conditions" refer to Table D. for guidance.

Lighting in conditioned and unconditioned spaces must not be combined for compliance per §140.6(b)1.	Allowed Lighting Power per §140.6(b) (Watts)						Adjusted Lighting Power per §140.6(a) (Watts)						Compliance Results
	01	02	03	04		05		06	07		08		09
	Complete Building §140.6(c)1	Area Category §140.6(c)2	Area Category Additional §140.6(c)2G (+)	Tailored §140.6(c)3 (+)	=	Total Allowed (Watts)	≥	Total Designed (Watts)	Adjustments PAF Control Credits §140.6(a)2 (-)	=	Total Adjusted (Watts) *Includes Adjustments		05 Must be ≥ 08 §140.6
	(See Table I)	(See Table I)	(See Table J)	(See Table K)				(See Table F)	(See Table P)				
Conditioned:	9,318.4				=	**9,318.4**	≥	6,133.7		=	**6,133.7**		**COMPLIES**
Unconditioned:					=		≥			=			

Table Continued

STATE OF CALIFORNIA
Indoor Lighting
NRCC-LTI-E (Created 7/19) CALIFORNIA ENERGY COMMISSION

CERTIFICATE OF COMPLIANCE NRCC-LTI-E
Project Name: CSU STANISLAUS CDC | Report Page: Page 2 of 8
Project Address: 1 UNIVERSITY CIRCLE | Date Prepared: 6/21/21

Controls Compliance (See Table H for Details)	DOES NOT COMPLY
Rated Power Reduction Compliance (See Table Q for Details)	Not Applicable

D. EXCEPTIONAL CONDITIONS

This table is auto-filled with uneditable comments because of selections made or data entered in tables throughout the form.

Table H Indoor Lighting Controls Permit Applicant Notes:
130: ELECTRICAL ROOM
133: ELECTRICAL/MECHANICAL ROOM

E. ADDITIONAL REMARKS

This table includes remarks made by the permit applicant to the Authority Having Jurisdiction.

F. INDOOR LIGHTING FIXTURE SCHEDULE

Table Instructions: Include all permanent designed lighting and all portable lighting in offices.

Designed Wattage: Conditioned Spaces

01	02	03	04	05	06	07	08	09	10	
Name or Item Tag	Complete Luminaire Description	Modular (Track) Fixture	Small Aperture & Color Change[1]	Watts per luminaire[2]	How Wattage is determined	Total number luminaires	Exempt per §140.6(a)3	Design Watts	Field Inspector Pass	Fail
A1	2X2 TROFFER	☐	☐	28.5	Mfr. Spec[2]	1	☐	28.5	☐	☐
A2	2X4 TROFFER	☐	☐	35.2	Mfr. Spec[2]	18	☐	633.6	☐	☐
A3	2X4 TROFFER	☐	☐	38.7	Mfr. Spec[2]	2	☐	77.4	☐	☐
B1	2X2 TROFFER	☐	☐	39.2	Mfr. Spec[2]	3	☐	117.6	☐	☐
B2/B3	2X4 TROFFER	☐	☐	48.1	Mfr. Spec[2]	8	☐	384.8	☐	☐
D1	8' INDUSTRIAL	☐	☐	69.5	Mfr. Spec[2]	1	☐	69.5	☐	☐
D2	8' INDUSTRIAL	☐	☐	39.8	Mfr. Spec[2]	6	☐	238.8	☐	☐
F	UNDERCABINET FIXTURE	☐	☐	3	Mfr. Spec[2]	48	☐	144	☐	☐
G1/G2	DECORATIVE PENDANT	☐	☐	7	Other	11	☐	77	☐	☐
H1/J1	PENDANT	☐	☐	77	Mfr. Spec[2]	15	☐	1,155	☐	☐
H2/J2	PENDANT	☐	☐	46	Mfr. Spec[2]	22	☐	1,012	☐	☐

STATE OF CALIFORNIA
Indoor Lighting
NRCC-LTI-E (Created 7/19) CALIFORNIA ENERGY COMMISSION

CERTIFICATE OF COMPLIANCE NRCC-LTI-E
Project Name: CSU STANISLAUS CDC | Report Page: Page 3 of 8
Project Address: 1 UNIVERSITY CIRCLE | Date Prepared: 6/21/21

01	02	03	04	05	06	07	08	09	10	
Name or Item Tag	Complete Luminaire Description	Modular (Track) Fixture	Small Aperture & Color Change[1]	Watts per luminaire[2]	How Wattage is determined	Total number luminaires	Exempt per §140.6(a)3	Design Watts	Field Inspector Pass	Fail
L1	40"DIA ROUND	☐	☐	78	Mfr. Spec[2]	2	☐	156	☐	☐
S1	32"DIA ROUND RECESSED	☐	☐	60	Mfr. Spec[2]	8	☐	480	☐	☐
L2	16"DIA ROUND RECESSED	☐	☐	40	Mfr. Spec[2]	6	☐	240	☐	☐
M	ADJUST. WALL DOWNLIGHT	☐	☐	16	Mfr. Spec[2]	19	☐	304	☐	☐
N	DOWNLIGHT	☐	☐	9	Mfr. Spec[2]	8	☐	72	☐	☐
O	WALL LINEAR	☐	☐	54	Mfr. Spec[2]	1	☐	54	☐	☐
T1	DOWNLIGHT	☐	☐	15.1	Mfr. Spec[2]	45	☐	679.5	☐	☐
T2	DOWNLIGHT	☐	☐	21	Mfr. Spec[2]	10	☐	210	☐	☐
						Total Designed Watts CONDITIONED SPACES:		**6,133.7**		

[1] *FOOTNOTE: Design Watts for small aperture and color changing luminaires which qualify per §140.6(a)4B is adjusted to be 75% of their rated wattage. Table F automatically makes this adjustment, the permit applicant should enter full rated wattage in column 05.*
[2] *Authority Having Jurisdiction may ask for Luminaire cut sheets to confirm wattage used for compliance per §130.0(c) Wattage used must be the maximum rated for the luminaire, not the lamp.*

G. MODULAR LIGHTING SYSTEMS

This Section Does Not Apply

H. INDOOR LIGHTING CONTROLS (Not Including PAFs)

*Table Instructions: Please include lighting controls for conditioned and unconditioned spaces in this table. When an option having a * is selected, the notes section of this table must be completed. The lighting controls section of the Compliance Summary Table on the first page will show "DOES NOT COMPLY" if the notes are left blank.*

Building Level Controls

01	02	03	
		Field Inspector	
Mandatory Demand Response §110.12(c)	Shut-Off Controls §130.1(c)	Pass	Fail
Required > 10,000 SF	See Area/Space Level Controls	☐	☐

Area Level Controls

STATE OF CALIFORNIA
Indoor Lighting
NRCC-LTI-E (Created 7/19) CALIFORNIA ENERGY COMMISSION

CERTIFICATE OF COMPLIANCE NRCC-LTI-E
Project Name: CSU STANISLAUS CDC | Report Page: Page 4 of 8
Project Address: 1 UNIVERSITY CIRCLE | Date Prepared: 6/21/21

04	05	06	07	08	09	10	11	12	
Area Description	Complete Building or Area Category Primary Function Area	Area Controls §130.1(a)	Multi-Level Controls §130.1(b)	Shut-Off Controls §130.1(c)	Primary/Skylit Daylighting §130.1(d)	Secondary Daylighting §140.6(d)	Interlocked Systems §140.6(a)1	Field Inspector Pass	Fail
100, 103, 121	Main Entry Lobby	Manual ON/ OFF	Dimmer	Occ. Sensor	Included	NA	☐	☐	☐
101, 102, 104, 105, 106	Office (≤ 250 square feet)	Manual ON/ OFF	Dimmer	Occ. Sensor	NA	NA	☐	☐	☐
108, 120A, 125, 131, 136	Commercial and Industrial Storage	Manual ON/ OFF	NA: ≤ 80% LP (alt only)	Occ. Sensor	NA	NA	☐	☐	☐
107, 107A, 111, 115, 119, 135, 139	Classroom, Lecture, Training, Vocational	Manual ON/ OFF	Dimmer	Occ. Sensor	Included	NA	☐	☐	☐
107B, 111A, 115A, 119A, 119B, 135A/B/C, 139A/B/C	Classroom, Lecture, Training, Vocational	Manual ON/ OFF	Dimmer	Occ. Sensor	NA	NA	☐	☐	☐
109, 117, 123B	Restroom	Manual ON/ OFF	Dimmer	Occ. Sensor	NA	NA	☐	☐	☐
110, 118, 126, 127, 128, 138	Laboratory Area, Scientific	Manual ON/ OFF	Dimmer	Occ. Sensor	NA	NA	☐	☐	☐
112, 114, 116, 129	Commercial and Industrial Storage	Manual ON/ OFF	Dimmer	Occ. Sensor	NA	NA	☐	☐	☐
113, 140	Corridor	Manual ON/ OFF	Dimmer	Occ. Sensor	NA	NA	☐	☐	☐
120	Kitchen, Food Preparation	Manual ON/ OFF	Dimmer	Occ. Sensor	NA	NA	☐	☐	☐
122	General Commercial and Industrial Work - Low Bay	Manual ON/ OFF	Dimmer	Occ. Sensor	Included	Included	☐	☐	☐
123A	Restroom	Manual ON/ OFF	NA: ≤ 80% LP (alt only)	Occ. Sensor	NA	NA	☐	☐	☐
124	General Commercial and Industrial Work - Low Bay	Manual ON/ OFF	NA: ≤ 80% LP (alt only)	Occ. Sensor	NA: ≤ 80% LP (alt only)	NA: ≤ 80% LP (alt only)	☐	☐	☐
130	Electrical, Mechanical, Telephone Rooms	Manual ON/ OFF	NA: ≤ 80% LP (alt only)	Exempt*	NA	NA	☐	☐	☐

STATE OF CALIFORNIA
Indoor Lighting
NRCC-LTI-E (Created 7/19) CALIFORNIA ENERGY COMMISSION

CERTIFICATE OF COMPLIANCE NRCC-LTI-E
Project Name: CSU STANISLAUS CDC | Report Page: Page 5 of 8
Project Address: 1 UNIVERSITY CIRCLE | Date Prepared: 6/21/21

132	Electrical, Mechanical, Telephone Rooms	Manual ON/ OFF	Dimmer	Occ. Sensor	NA	N	☐	☐	☐
133	Electrical, Mechanical, Telephone Rooms	Manual ON/ OFF	Dimmer	Exempt*	NA	NA	☐	☐	☐
134	Convention, Conference, Multipurpose, and Meeting Center	Manual ON/ OFF	Dimmer	Occ. Sensor	NA	NA	☐	☐	☐
137	Kitchen, Food Preparation	Manual ON/ OFF	Dimmer	Occ. Sensor	NA	NA	☐	☐	☐

*NOTES: Controls with a * require a note in the space below explaining how compliance is achieved.
EX: Conference 1: Primary/Skylight Daylighting: Exempt because less than 120 watts of general lighting; EXCEPTION 1 to §130.1(d)2

	13
	Plan Sheet Showing Daylit Zones:
	E5.1
130	*ELECTRICAL ROOM*
133	*ELECTRICAL/MECHANICAL ROOM*

I. LIGHTING POWER ALLOWANCE: COMPLETE BUILDING OR AREA CATEGORY METHODS

Table Instructions: Complete the table for each area complying using the Complete Building or Area Category Methods per §140.6(b). Indicate if additional lighting power allowances per §140.6(c) or adjustments per §140.6(a) are being used.

Conditioned Spaces

01	02	03	04	05	06	
Area Description	Complete Building or Area Category Primary Function Area	Allowed Density (W/ft²)	Area (ft²)	Allowed Wattage (Watts)	Additional Allowances / Adjustment Area Category	PAF
BUILDING	School Building	0.65	14,336	9,318.4	☐	☐
			TOTAL:	**14,336**	**9,318.4**	See Tables J or P for detail

J. ADDITIONAL LIGHTING ALLOWANCE: AREA CATEGORY METHOD QUALIFYING LIGHTING SYSTEM

This Section Does Not Apply

K. TAILORED METHOD GENERAL LIGHTING POWER ALLOWANCE

This Section Does Not Apply

STATE OF CALIFORNIA
Indoor Lighting
NRCC-LTI-E (Created 7/19) CALIFORNIA ENERGY COMMISSION

CERTIFICATE OF COMPLIANCE NRCC-LTI-E
Project Name: CSU STANISLAUS CDC | Report Page: Page 6 of 8
Project Address: 1 UNIVERSITY CIRCLE | Date Prepared: 6/21/21

L. ADDITIONAL LIGHTING ALLOWANCE: TAILORED WALL DISPLAY

This Section Does Not Apply

M. ADDITIONAL LIGHTING ALLOWANCE: TAILORED FLOOR AND TASK LIGHTING

This Section Does Not Apply

N. ADDITIONAL LIGHTING ALLOWANCE: TAILORED ORNAMENTAL/SPECIAL EFFECTS

This Section Does Not Apply

O. ADDITIONAL LIGHTING ALLOWANCE: TAILORED VERY VALUABLE MERCHANDISE

This Section Does Not Apply

P. POWER ADJUSTMENT: LIGHTING CONTROL CREDIT (POWER ADJUSTMENT FACTOR (PAF))

This Section Does Not Apply

Q. RATED POWER REDUCTION COMPLIANCE FOR ALTERATIONS

This Section Does Not Apply

R. 80% LIGHTING POWER FOR ALTERATIONS - CONTROLS EXCEPTIONS

This Section Does Not Apply

S. DAYLIGHT DESIGN POWER ADJUSTMENT FACTOR (PAF)

This Section Does Not Apply

T. DECLARATION OF REQUIRED CERTIFICATES OF INSTALLATION

Table Instructions: Selections have been made based on information provided in previous tables of this document. If any selection needs to be changed, please explain why in Table E. Additional Remarks. These documents must be provided to the building inspector during construction and can be found online at https://ww2.energy.ca.gov/title24/2019standards/2019_compliance_documents/Nonresidential_Documents/NRCI/

YES	NO	Form/Title	Field Inspector Pass	Fail
◉	○	NRCI-LTI-01-E - Must be submitted for all buildings	☐	☐

STATE OF CALIFORNIA
Indoor Lighting
NRCC-LTI-E (Created 7/19) CALIFORNIA ENERGY COMMISSION

CERTIFICATE OF COMPLIANCE NRCC-LTI-E
Project Name: CSU STANISLAUS CDC | Report Page: Page 7 of 8
Project Address: 1 UNIVERSITY CIRCLE | Date Prepared: 6/21/21

○	◉	NRCI-LTI-02-E - Must be submitted for a lighting control system, or for an Energy Management Control System (EMCS), to be recognized for compliance.	☐	☐
○	◉	NRCI-LTI-04-E - Must be submitted for two interlocked systems serving an auditorium, a convention center, a conference room, a multipurpose room, or a theater to be recognized for compliance.	☐	☐
○	◉	NRCI-LTI-05-E - Must be submitted for a Power Adjustment Factor (PAF) to be recognized for compliance.	☐	☐
○	◉	NRCI-LTI-06-E - Must be submitted for additional wattage installed in a video conferencing studio to be recognized for compliance.	☐	☐

U. DECLARATION OF REQUIRED CERTIFICATES OF ACCEPTANCE

Table Instructions: Selections have been made based on information provided in previous tables of this document. If any selection needs to be changed, please explain why in Table E. Additional Remarks. These documents must be provided to the building inspector during construction and any with "-A" in the form name must be completed through an Acceptance Test Technician Certification Provider (ATTCP). For more information visit: http://www.energy.ca.gov/title24/attcp/providers.html

YES	NO	Form/Title	Field Inspector Pass	Fail
◉	○	NRCA-LTI-02-A - Must be submitted for occupancy sensors and automatic time switch controls.	☐	☐
◉	○	NRCA-LTI-03-A - Must be submitted for automatic daylight controls.	☐	☐
◉	○	NRCA-LTI-04-A - Must be submitted for demand responsive lighting controls.	☐	☐
○	◉	NRCA-LTI-05-A - Must be submitted for institutional tuning power adjustment factor (PAF).	☐	☐
○	◉	NRCA-ENV-03-F - Must be submitted for daylighting design power adjustment factors (PAF).	☐	☐

STATE OF CALIFORNIA
Indoor Lighting
NRCC-LTI-E (Created 7/19) CALIFORNIA ENERGY COMMISSION

CERTIFICATE OF COMPLIANCE NRCC-LTI-E
Project Name: CSU STANISLAUS CDC | Report Page: Page 8 of 8
Project Address: 1 UNIVERSITY CIRCLE | Date Prepared: 6/21/21

DOCUMENTATION AUTHOR'S DECLARATION STATEMENT

Documentation Author Name:	KEVIN PEZZONI	Documentation Author Signature:	
Company:	PEZZONI ENGINEERING, INC.	Signature Date:	6/21/21
Address:	1150 9th Street #1415	CEA/ HERS Certification Identification (if applicable):	
City/State/Zip:	MODESTO, CA 95354	Phone:	209.554.4602

RESPONSIBLE PERSON'S DECLARATION STATEMENT
I certify the following under penalty of perjury, under the laws of the State of California:
1. The information provided on this Certificate of Compliance is true and correct.
2. I am eligible under Division 3 of the Business and Professions Code to accept responsibility for the building design or system design identified on this Certificate of Compliance (responsible designer)
3. The energy features and performance specifications, materials, components, and manufactured devices for the building design or system design identified on this Certificate of Compliance conform to the requirements of Title 24, Part 1 and Part 6 of the California Code of Regulations.
4. The building design features or system design features identified on this Certificate of Compliance are consistent with the information provided on other applicable compliance documents, worksheets, calculations, plans and specifications submitted to the enforcement agency for approval with this building permit application.
5. I will ensure that a completed signed copy of this Certificate of Compliance shall be made available with the building permit(s) issued for the building, and made available to the enforcement agency for all applicable inspections. I understand that a completed signed copy of this Certificate of Compliance is required to be included with the documentation the builder provides to the building owner at occupancy.

Responsible Designer Name:	KEVIN PEZZONI	Responsible Designer Signature:	
Company :	PEZZONI ENGINEERING, INC.	Date Signed:	6/21/21
Address:	1150 9th Street #1415	License:	E16269
City/State/Zip:	MODESTO, CA 95354	Phone:	209.554.4602

Division of the State Architect

APPROVED
DIV. OF THE STATE ARCHITECT
APP: 02-119316 INC:
REVIEWED FOR
SS☐ FLS☐ ACS☑
DATE: 03/24/2022

Office of the State Fire Marshal

OFFICE OF THE STATE FIRE MARSHAL APPROVED FIRE AND PANIC ONLY
03/14/22
21-0498
Approval of this plan does not authorize or approve any omission or deviation from applicable regulations. Final approval is subject to field inspection. One set of approved plans shall be available on the project site at all times.

CSUS CHILD DEVELOPMENT CENTER

CALIFORNIA STATE UNIVERSITY, STANISLAUS
ONE UNIVERSITY CIRCLE
TURLOCK, CA 95382

ehdd.

PIER 1, BAY 2
THE EMBARCADERO
SAN FRANCISCO, CA 94111

INFO@EHDD.COM
+1 415-285-9193

Consultant

PEZZONI ENGINEERING, INC.
CONSULTING ELECTRICAL ENGINEERS
1150 9TH Street, Suite #1415 Modesto, CA 95354
PHONE: 209 554 - 4602
HTTP://WWW.PEZZENGR.COM

PEZZONI ENGINEERING, INC. © Copyrighted 2020

Stamp

Printing Date

95% CONSTRUCTION DOCUMENTS	06.25.2021
PERMIT SET	08.16.2021
PERMIT SET - DSA V2	12.15.2021
PERMIT SET - SFM	12.21.2021

Revisions and Description Date

Scale
AS NOTED

Drawn by
CCM / KP

EHDD Job Number
20020

Sheet Title
NRCC-LTI

Sheet Number
E10.2 V3

STATE OF CALIFORNIA
Outdoor Lighting
NRCC-LTO-E (Created 4/19) — CALIFORNIA ENERGY COMMISSION

CERTIFICATE OF COMPLIANCE	NRCC-LTO-E
This document is used to demonstrate compliance with requirements in §110.9, §130.0, §130.2, §140.7, and §141.0(b)2I, for outdoor lighting scopes using the prescriptive path.	
Project Name: CSU STANISLAUS CDC	Report Page: Page 1 of 7
Project Address: 1 UNIVERSITY CIRCLE	Date Prepared: 6/21/21

A. GENERAL INFORMATION

01	Project Location (city)	TURLOCK	04 Total Illuminated Hardscape Area (ft²)
02	Climate Zone	12	
03	Outdoor Lighting Zone per Title 24, Part 1 §10-114 or as designated by Authority Having Jurisdiction (AHJ):		

☐ LZ-0: Very Low - Undeveloped Parkland ☐ LZ-2: Moderate - Rural Areas ☐ LZ-4: High - Must be reviewed by CA Energy Commission for Approval
☐ LZ-1: Low - Developed Parkland ☑ LZ-3: Moderately High - Urban Areas

B. PROJECT SCOPE

Table Instructions: Include any outdoor lighting systems that are within the scope of the permit application and are demonstrating compliance using the prescriptive path outlined in §140.7 or §141.0(b)2I for alterations.

My project consists of:

01	02
☑ New Lighting System	Must Comply with Allowances from §140.7.
☐ Altered Lighting System	Is your alteration increasing the connected lighting load (Watts)? ○ Yes ○ No

[1] FOOTNOTES: % of Existing Luminaires Being Altered = (Sum Total of Luminaires Being Added or Altered / Existing Luminaires within the Scope of the Permit Application) x 100

C. COMPLIANCE RESULTS

Table Instructions: If any cell on this table says "DOES NOT COMPLY" or "COMPLIES with Exceptional Conditions" refer to Table D. for guidance.

Calculation of Total Allowed Lighting Power (Watts) §140.7 or §141.0(b)2L											Compliance Results
01		02	03	04	05		06		07	08	09
General Hardscape Allowance §140.7(d)1	+	Per Application §140.7(d)2	Sales Frontage §140.7(d)2	Ornamental §140.7(d)2	Per Specific Area §140.7(d)2	OR	Existing Power §141.0(b)2L	=	Total Allowed (Watts)	≥	Total Actual (Watts)	07 Must be ≥ 08
(See Table I)		(See Table J)	(See Table K)	(See Table L)	(See Table M)		(See Table N)				(See Table F)	
1,047.81	+	222.9	+	+	+	OR		=	1,270.71	≥	1,177.9	COMPLIES
									Cutoff Compliance (See Table G for Details)			COMPLIES
									Controls Compliance (See Table H for Details)			COMPLIES

STATE OF CALIFORNIA
Outdoor Lighting
NRCC-LTO-E (Created 4/19) — CALIFORNIA ENERGY COMMISSION

CERTIFICATE OF COMPLIANCE	NRCC-LTO-E
Project Name: CSU STANISLAUS CDC	Report Page: Page 2 of 7
Project Address: 1 UNIVERSITY CIRCLE	Date Prepared: 6/21/21

D. EXCEPTIONAL CONDITIONS

This table is auto-filled with uneditable comments because of selections made or data entered in tables throughout the form.

Total Hardscape Area in Table A does not match the areas entered in Table I. Please review for compliance.

E. ADDITIONAL REMARKS

This table includes remarks made by the permit applicant to the Authority Having Jurisdiction.

F. OUTDOOR LIGHTING FIXTURE SCHEDULE

Table Instructions: For new or altered lighting systems demonstrating compliance with §140.7 (ie Table I has expanded for input), include all luminaires being installed and any existing luminaires remaining or being moved within the spaces covered by the permit application in the Table below. For altered lighting systems using the Existing Power method per §141.0(b)2L (ie Table N has expanded for input), include only new luminaires being installed and replacement luminaires being installed as part of the project scope (ie, do not include existing luminaires remaining or existing luminaires being moved).

Designed Wattage:

01	02	03	04	05	06	07	08	09	10	
Name or Item Tag	Complete Luminaire Description	Watts per luminaire[1,2]	How Wattage is determined	Total number luminaires[2]	Luminaire Status[3]	Excluded per §140.7(a)	Design Watts	Cutoff Req. ≥ 6,200 initial lumen output §130.2(b)[4]	Field Inspector Pass	Fail
P	PEDESTRIAN POLE LT. ☐ Linear	71	Mfr. Spec[1]	10	New	☐	710	Yes	☐	☐
W	WALL SCONCE ☐ Linear	13.9	Mfr. Spec[1]	11	New	☐	152.9	NA: <6,200 lumens	☐	☐
Q	DOWNLIGHT ☐ Linear	35	Mfr. Spec[1]	9	New	☐	315	NA: <6,200 lumens	☐	☐
						Total Designed Watts:	1,177.9			

* NOTES: Selections with a * require a note in the space below explaining how compliance is achieved.
EX: Luminaire is lighting a statue; EXCEPTION 2 to §130.2(b).

[1] FOOTNOTES: Authority Having Jurisdiction may ask for Luminaire cut sheets to confirm wattage used for compliance per §130.0(c)
[2] For linear luminaires, wattage should be indicated as W/lf instead of Watts/luminaire. Total linear feet for the luminaire should be indicated in column 05 instead of number of luminaires.
[3] Select "New" for new luminaires in a new outdoor lighting project or for added luminaires in an alteration. Select "Altered" for replacement luminaires in an alteration. Select "Existing to Remain" for existing luminaires within the project scope that are not being altered and are remaining. Select "Existing Reinstalled" for existing luminaires which are being removed and reinstalled as part of the project scope
[4] Compliance with mandatory cutoff requirements is required for luminaires with initial lumen output ≥ 6,200 unless exempted by §130.2(b).

STATE OF CALIFORNIA
Outdoor Lighting
NRCC-LTO-E (Created 4/19) — CALIFORNIA ENERGY COMMISSION

CERTIFICATE OF COMPLIANCE	NRCC-LTO-E
Project Name: CSU STANISLAUS CDC	Report Page: Page 3 of 7
Project Address: 1 UNIVERSITY CIRCLE	Date Prepared: 6/21/21

G. CUTOFF REQUIREMENTS (BUG)

Table Instructions: Complete this table for fixtures of ≥ 6,200 initial luminaire lumens indicated on Table F as needing to comply with Cutoff Requirements. Maximum lumens can be found in Title 24, Part 11, Section 5.106.8.

01	02	03			04	05	06	07	08	09			10	11	12	
Name or Item Tag	Complete Luminaire Description	Backlight Rating[3]			Uplight Rating[3]		Glare Rating[3]								Field Inspector	
		Mounting Height from Property Line[1]	Max Allowable Backlight Rating[3]	Backlight Rating Per Design	Lighting Type	Max Allowable Backlight Rating[3]	Uplight Rating Per Design	Mounting Height from Property Line[1]	Max Allowable Glare Rating[3]	Glare Rating Per Design	Pass	Fail
P	PEDESTRIAN L	> 2 MH from property line	No Limit	2	Area Lighting	U0	0	> 2 MH from property line	G3	2	☐	☐

[1] FOOTNOTES: Mounting Height is labeled MH in this table
[2] Authority having jurisdiction may ask for luminaire cut sheets or other documentation to confirm luminaire type, uplight ratings and glare ratings used for compliance per §130.2(b).
[3] BUG ratings with a lower number than the 'Max Allowable' are compliant. Ex. If Max Allowable is Bug Rating is B4, then B0, B1, B2, B3 and B4 are all compliant.

H. OUTDOOR LIGHTING CONTROLS

Table Instructions: Complete this table demonstrating compliance with controls requirements for all new or altered luminaires installed as part of the permit application. For alteration projects, luminaires which are existing to remain (ie untouched) and luminaires which are removed and reinstalled (wiring only) do not need to be included in this table even if they are within the spaces covered by the permit application.
*When an option having a * is selected, the notes section of this table must be completed. The lighting controls section of the Compliance Summary Table on the first page will show "DOES NOT COMPLY" if the notes are left blank. For each requirement in columns 02 through 04, do not leave the field blank, instead select NA or Exempt* from the dropdown list to indicate not applicable or an exemption.*

Mandatory Controls

01	02	03	04	05	
Area Description	Shut-Off §130.2(c)1	Auto-Schedule §130.2(c)2	Motion Sensor §130.2(c)3	Field Inspector Pass	Fail
POLE LIGHTS	Photocontrol	Yes	Yes	☐	☐
BUILDING DOWNLIGHT & SCONCES	Astronomical Timer	Yes	NA: Wall ≤ 24ft	☐	☐

Table Continued

STATE OF CALIFORNIA
Outdoor Lighting
NRCC-LTO-E (Created 4/19) — CALIFORNIA ENERGY COMMISSION

CERTIFICATE OF COMPLIANCE	NRCC-LTO-E
Project Name: CSU STANISLAUS CDC	Report Page: Page 4 of 7
Project Address: 1 UNIVERSITY CIRCLE	Date Prepared: 6/21/21

01	02	03	04	05	
Area Description	Shut-Off §130.2(c)1	Auto-Schedule §130.2(c)2	Motion Sensor §130.2(c)3	Field Inspector Pass	Fail

*NOTES: Controls with a * require a note in the space below explaining how compliance is achieved.
EX: Not permitted by health & safety to be turned off; EXCEPTION 1 to §130.2(c).

I. LIGHTING POWER ALLOWANCE (per §140.7)

Table Instructions: Please complete this table for areas using the allowance calculations per §140.7. General Hardscape Allowance is per Table 140.7-A while "Use it or lost it" Allowances are per Table 140.7-B. Indicate which allowances are being used to expand sections for user input. Luminaires that qualify for one of the "Use it or lose it" allowances shall not qualify for another "Use it or lose it" allowance.

	01 "Use it or lose it" Allowances (select all that apply)				
☑ General Hardscape Allowance	☑ Per Application	☐ Sales Frontage	☐ Ornamental	☐ Per Specific Area	
Table I (below)	Table J	Table K	Table L	Table M	

Calculated General Hardscape Lighting Power Allowance per Table 140.7-A (LZ 2 & 3)

02	03	04	05	06	07	08	09	10
Area Description	Surface Type	Area Wattage Allowance (AWA)			Linear Wattage Allowance (LWA)			Total General AWA + LWA (Watts)
		Illuminated Area (ft²)	Allowed Density (W/ft²)	Area Allowance (Watts)	Perimeter Length (lf)	Allowed Density (W/lf)	Linear Allowance (Watts)	
PAVEMENT	Asphalt	7,254	0.025	181.35	710	0.25	177.5	358.85
SIDEWALK	Concrete	3,032	0.03	90.96	620	0.4	248	338.96
							Initial Wattage Allowance for Entire Site (Watts):	350
							Total General Hardscape Allowance (Watts):	1,047.81

J. LIGHTING ALLOWANCE: PER APPLICATION

Table Instructions: Please complete this table for areas using the wattage allowance per application from Table 140.7-B.

01	02	03	04	05	06	07	08	09	10
Area Description	Application per Table 140.7-B[1]	CALCULATED ALLOWANCE (Watts)			DESIGN WATTS				Additional Allowance (Watts)
		# of Locations	Allowance per Location[2] (Watts)	Extra Allowance (Watts)	Luminaire Name or Item Tag	Watts per Luminaire[3]	# of Luminaires[4]	Design Watts	

Table Continued

STATE OF CALIFORNIA
Outdoor Lighting
NRCC-LTO-E (Created 4/19) — CALIFORNIA ENERGY COMMISSION

CERTIFICATE OF COMPLIANCE	NRCC-LTO-E
Project Name: CSU STANISLAUS CDC	Report Page: Page 5 of 7
Project Address: 1 UNIVERSITY CIRCLE	Date Prepared: 6/21/21

01	02	03	04	05	06	07	08	09	10
Area Description	Application per Table 140.7-B[1]	CALCULATED ALLOWANCE (Watts)			DESIGN WATTS				Additional Allowance (Watts)
		# of Locations	Allowance per Location[2] (Watts)	Extra Allowance (Watts)	Luminaire Name or Item Tag	Watts per Luminaire[3]	# of Luminaires[4]	Design Watts	
ENTRY	Bldg Entrance/ Exit	13	19	247	Q	35	2	70	
					W	13.9	11	152.9	
							Total Design Watts for this Area:	222.9	222.9
							Total Allowance (Watts) All Areas:		222.9

[1] FOOTNOTES: Primary entrance applications are only available for senior care facilities, healthcare facilities, police stations, hospitals, fire stations, and emergency vehicle facilities.
[2] The Allowance per Location for ATMs is 100W for the first ATM and 35W for each additional per Table 140.7-B.
[3] For luminaires indicated in Table F as linear, wattage in column 07 is W/lf instead of Watts/luminaire. Total linear feet for the luminaire should be indicated in column 08 instead of number of luminaires.

K. LIGHTING ALLOWANCE: SALES FRONTAGE

This Section Does Not Apply

L. LIGHTING ALLOWANCE: ORNAMENTAL

This Section Does Not Apply

M. LIGHTING ALLOWANCE: PER SPECIFIC AREA

This Section Does Not Apply

N. EXISTING CONDITIONS POWER ALLOWANCE (alterations only)

This Section Does Not Apply

STATE OF CALIFORNIA
Outdoor Lighting
NRCC-LTO-E (Created 4/19) — CALIFORNIA ENERGY COMMISSION

CERTIFICATE OF COMPLIANCE	NRCC-LTO-E
Project Name: CSU STANISLAUS CDC	Report Page: Page 6 of 7
Project Address: 1 UNIVERSITY CIRCLE	Date Prepared: 6/21/21

O. DECLARATION OF REQUIRED CERTIFICATES OF INSTALLATION

Table Instructions: Selections have been made based on information provided in previous tables of this document. If any selection needs to be changed, please explain why in Table E. Additional Remarks. These documents must be provided to the building inspector during construction and can be found online at https://www.energy.ca.gov/title24/2019standards/2019_compliance_documents/Nonresidential_Documents/NRCI/

YES	NO	Form/Title	Field Inspector Pass	Fail
◉	○	NRCI-LTO-01-E - Must be submitted for all buildings.	☐	☐
◉	○	NRCI-LTO-02-E - Must be submitted for a lighting control system; or for an Energy Management Control System (EMCS), to be recognized for compliance.	☐	☐

P. DECLARATION OF REQUIRED CERTIFICATES OF ACCEPTANCE

Table Instructions: Selections have been made based on information provided in previous tables of this document. If any selection needs to be changed, please explain why in Table E. Additional Remarks. These documents must be provided to the building inspector during construction and must be completed through an Acceptance Test Technician Certification Provider (ATTCP). For more information visit: http://www.energy.ca.gov/title24/attcp/providers.html

YES	NO	Form/Title	Field Inspector Pass	Fail
◉	○	NRCA-LTO-02-A - Must be submitted for all outdoor lighting controls except for alterations where controls area added to ≤ 20 luminaires.	☐	☐

STATE OF CALIFORNIA
Outdoor Lighting
NRCC-LTO-E (Created 4/19) — CALIFORNIA ENERGY COMMISSION

CERTIFICATE OF COMPLIANCE	NRCC-LTO-E
Project Name: CSU STANISLAUS CDC	Report Page: Page 7 of 7
Project Address: 1 UNIVERSITY CIRCLE	Date Prepared: 6/21/21

DOCUMENTATION AUTHOR'S DECLARATION STATEMENT

Documentation Author Name:	KEVIN PEZZONI	Documentation Author Signature:	
Company:	PEZZONI ENGINEERING, INC.	Signature Date:	6/21/21
Address:	1150 9th Street #1415	CEA/ HERS Certification Identification (if applicable):	
City/State/Zip:	MODESTO, CA 95354	Phone:	209.554.4602

RESPONSIBLE PERSON'S DECLARATION STATEMENT
I certify the following under penalty of perjury, under the laws of the State of California:
1. The information provided on this Certificate of Compliance is true and correct.
2. I am eligible under Division 3 of the Business and Professions Code to accept responsibility for the building design or system design identified on this Certificate of Compliance (responsible designer)
3. The energy features and performance specifications, materials, components, and manufactured devices for the building design or system design identified on this Certificate of Compliance conform to the requirements of Title 24, Part 1 and Part 6 of the California Code of Regulations.
4. The building design features or system design features identified on this Certificate of Compliance are consistent with the information provided on other applicable compliance documents, worksheets, calculations, plans and specifications submitted to the enforcement agency for approval with this building permit application.
5. I will ensure that a completed signed copy of this Certificate of Compliance shall be made available with the building permit(s) issued for the building, and made available to the enforcement agency for all applicable inspections. I understand that a completed signed copy of this Certificate of Compliance is required to be included with the documentation the builder provides to the building owner at occupancy.

Responsible Designer Name:	KEVIN PEZZONI	Responsible Designer Signature:	
Company :	PEZZONI ENGINEERING, INC.	Date Signed:	6/21/21
Address:	1150 9th Street #1415	License:	E16269
City/State/Zip:	MODESTO, CA 95354	Phone:	209.554.4602

Division of the State Architect

APPROVED
DIV. OF THE STATE ARCHITECT
APP: 02-119316 INC:
REVIEWED FOR
SS☐ FLS☐ ACS☑
DATE: 03/24/2022

Office of the State Fire Marshal

OFFICE OF THE STATE FIRE MARSHAL
APPROVED FIRE AND PANIC ONLY
03/14/22
21-0498
Approval of this plan does not authorize or approve any omission or deviation from applicable regulations. Final approval is subject to field inspection. One set of approved plans shall be available on the project site at all times.

CSUS CHILD DEVELOPMENT CENTER

CALIFORNIA STATE UNIVERSITY, STANISLAUS
ONE UNIVERSITY CIRCLE
TURLOCK, CA 95382

ehdd.

PIER 1, BAY 2
THE EMBARCADERO
SAN FRANCISCO, CA 94111

INFO@EHDD.COM
+1 415-285-9193

Consultant

PEZZONI ENGINEERING, INC.
CONSULTING ELECTRICAL ENGINEERS
1150 9TH Street, Suite #1415 Modesto, CA 95354
PHONE: 209. 554. 4602
HTTP://WWW.PEZZNGR.COM

PEZZONI ENGINEERING, INC. © Copyrighted 2020

Stamp

REGISTERED PROFESSIONAL ENGINEER
KEVIN L. PEZZONI
No. 16269
Exp. 6/30/21
ELECTRICAL
STATE OF CALIFORNIA

Printing	Date
95% CONSTRUCTION DOCUMENTS	06.25.2021
PERMIT SET	08.16.2021
PERMIT SET - DSA V2	12.15.2021
PERMIT SET - SFM	12.21.2021

Revisions and Description	Date

Scale
AS NOTED

Drawn by
CCM / KP

EHDD Job Number
20020

Sheet Title
NRCC-LT0

Sheet Number
E10.3V3

8/6/2021 5:44:22 PM
12/15/21 11:45:43 AM F:\20\546 CSUS CHILD DEVELOPMENT CENTER\ENGR\SHEETS\546_E10.1 ENERGY COMPLIANCE FORMS.DWG cmendez

STATE OF CALIFORNIA
Solar Ready Areas
NRCC-SRA-E (Created 04/19) CALIFORNIA ENERGY COMMISSION

CERTIFICATE OF COMPLIANCE	NRCC-SRA-E

This document is used to demonstrate compliance with mandatory requirements in §110.10 for newly constructed buildings which are either high-rise multifamily ten stories or fewer, hotel/motel ten stories or fewer or all other nonresidential buildings three stories or fewer. It is also used to demonstrate compliance for additions to these building types which add more than 2,000 ft² of roof area. Alterations or additions of less than 2,000 ft² of roof area are not required to comply with §110.10.

Project Name: CSU STANISLAUS CDC	Report Page: Page 1 of 4
Project Address: 1 UNIVERSITY CIRCLE	Date Prepared: 6/21/21

A. GENERAL INFORMATION

01	Project Location (city)	TURLOCK	04 Building Type	Other nonresidential bldg 3 stories or fewer
02	Climate Zone	12	05 Construction Type	New Construction
03	☐ Roof is designed for vehicle traffic, parking or for heliport			

B. PROJECT SCOPE

Table Instructions: Select the compliance path the project is using to comply per §110.10(b)1B.

My project consists of (check one):

01

☐ Provide Solar Ready Area no exceptions	The project has allocated a solar zone on the roof plan per requirements in §110.10(b), as documented in Table F.
☑ Exception to Solar Ready Area: installed Solar Photovoltaic System	The project includes a permanently installed solar electric system having a nameplate DC power rating, measured under Standard Test Conditions, of no less than one watt per square foot of roof area, as documented in Table G.
☐ Exception to Solar Ready Area: installed Solar Water Heating System	The project is a hotel/motel or high-rise multifamily occupancy and includes a permanently installed domestic solar water-heating system complying with §150.1(c)8Bii and Reference Residential Appendix RA4, as documented in Table H.
Exception to Solar Ready Area: ☐ Smart Thermostat and Alternative Energy Efficiency Measure	The project is a high-rise multifamily occupancy where all thermostats in each dwelling unit comply with §110.12(a) AND at least one additional measure listed in Exception 4 to §110.10(b)1B is installed, as documented in Table I.

C. COMPLIANCE RESULTS

Table Instructions: If any cell on this table says "DOES NOT COMPLY" or "COMPLIES with Exceptional Conditions" refer to Table D. for guidance or see the applicable Table referenced below

Allocated Solar Zone				Installed PV System				Installed SWH System				Smart Tstat and Alternative EE Measure		Compliance Results
01		02		03		04		05		06		07	08	09
Required Minimum Area (ft²)	≤	Designated Area (ft²)	OR	Required Minimum DC Power Rating (Watts)	≤	Designed DC Power Rating (Watts)	OR	Required Minimum Solar Savings Fraction	≤	Designed/ Rated Solar Savings Fraction	OR	JA5 Compliant Thermostat Specified?	Alternative Energy Efficiency Measure	
(See Table F)				(See Table G)				(See Table H)					(See Table I)	
	≤		OR	19,818	≤	150,000	OR		≤		OR			**COMPLIES**
				Location in construction documents showing the location for inverters and metering equipment and a pathway for the routing of conduit/ plumbing to the electrical service/ water heating system per §110.10(c).										**Not Applicable**

STATE OF CALIFORNIA
Solar Ready Areas
NRCC-SRA-E (Created 04/19) CALIFORNIA ENERGY COMMISSION

CERTIFICATE OF COMPLIANCE	NRCC-SRA-E
Project Name: CSU STANISLAUS CDC	Report Page: Page 2 of 4
Project Address: 1 UNIVERSITY CIRCLE	Date Prepared: 6/21/21

D. EXCEPTIONAL CONDITIONS

This table is auto-filled with uneditable comments because of selections made or data entered in tables throughout the form.

No exceptional conditions apply to this project.

E. ADDITIONAL REMARKS

This table includes remarks made by the permit applicant to the Authority Having Jurisdiction.

F. ALLOCATED SOLAR ZONE

This Section Does Not Apply

G. PERMANENTLY INSTALLED SOLAR PHOTOVOLTAIC (PV) SYSTEM

Table Instructions: Complete this table if the project is installing a PV system to comply with §110.10(b)1B Exception 1.

01	02	03	04	05	
Total Roof Area[1] (ft²)	Required Minimum DC Power Rating (Watts)	Designed System DC Power Rating (Watts)	Location in Construction Documents showing PV System/ Components	Field Inspector Pass	Fail
19,818	19,818	150000	E6.1	☐	☐

[1] *FOOTNOTES: Newly Constructed Projects should report total roof area; Additions should report newly added roof area.*

H. PERMANENTLY INSTALLED SOLAR HOT WATER SYSTEM

This Section Does Not Apply

I. SMART THERMOSTATS AND ALTERNATIVE EFFICIENCY MEASURE

This Section Does Not Apply

STATE OF CALIFORNIA
Solar Ready Areas
NRCC-SRA-E (Created 04/19) CALIFORNIA ENERGY COMMISSION

CERTIFICATE OF COMPLIANCE	NRCC-SRA-E
Project Name: CSU STANISLAUS CDC	Report Page: Page 3 of 4
Project Address: 1 UNIVERSITY CIRCLE	Date Prepared: 6/21/21

J. DECLARATION OF REQUIRED CERTIFICATES OF INSTALLATION

Table Instructions: Selections have been made based on information provided in previous tables of this document. If any selection needs to be changed, please explain why in Table E. Additional Remarks. These documents must be provided to the building inspector during construction and can be found online at https://www.energy.ca.gov/title24/2019standards/2019_compliance_documents/Nonresidential_Documents/NRCI/

YES	NO	Form/Title	Field Inspector Pass	Fail
◉	○	NRCI-SPV-01-E - Must be submitted for all newly installed Photovoltaic Systems (PV) being used to comply with §110.10(b)1B for high-rise multifamily, Hotel/Motel buildings less than 10 stories and nonresidential buildings less than 4 stories.	☐	☐
○	◉	NRCI-STH-01-E - Must be submitted for all newly installed Solar Water Heating systems being used to comply with §110.10(b)1B for high-rise multifamily, Hotel/Motel buildings less than 10 stories and nonresidential buildings less than 4 stories.	☐	☐

K. DECLARATION OF REQUIRED CERTIFICATES OF ACCEPTANCE

There are no Certificates of Acceptance applicable to solar ready requirements.

STATE OF CALIFORNIA
Solar Ready Areas
NRCC-SRA-E (Created 04/19) CALIFORNIA ENERGY COMMISSION

CERTIFICATE OF COMPLIANCE	NRCC-SRA-E
Project Name: CSU STANISLAUS CDC	Report Page: Page 4 of 4
Project Address: 1 UNIVERSITY CIRCLE	Date Prepared: 6/21/21

DOCUMENTATION AUTHOR'S DECLARATION STATEMENT

Documentation Author Name:	KEVIN PEZZONI	Documentation Author Signature:	
Company:	PEZZONI ENGINEERING, INC.	Signature Date:	6/21/21
Address:	1150 9th Street #1415	CEA/ HERS Certification Identification (if applicable):	
City/State/Zip:	MODESTO, CA 95354	Phone:	209.554.4602

RESPONSIBLE PERSON'S DECLARATION STATEMENT

I certify the following under penalty of perjury, under the laws of the State of California:

1. **The information provided on this Certificate of Compliance is true and correct.**
2. **I am eligible under Division 3 of the Business and Professions Code to accept responsibility for the building design or system design identified on this Certificate of Compliance (responsible designer)**
3. **The energy features and performance specifications, materials, components, and manufactured devices for the building design or system design identified on this Certificate of Compliance conform to the requirements of Title 24, Part 1 and Part 6 of the California Code of Regulations.**
4. **The building design features or system design features identified on this Certificate of Compliance are consistent with the information provided on other applicable compliance documents, worksheets, calculations, plans and specifications submitted to the enforcement agency for approval with this building permit application.**
5. **I will ensure that a completed signed copy of this Certificate of Compliance shall be made available with the building permit(s) issued for the building, and made available to the enforcement agency for all applicable inspections. I understand that a completed signed copy of this Certificate of Compliance is required to be included with the documentation the builder provides to the building owner at occupancy.**

Responsible Designer Name:	KEVIN PEZZONI	Responsible Designer Signature:	
Company :	PEZZONI ENGINEERING, INC.	Date Signed:	6/21/21
Address:	1150 9th Street #1415	License:	E16269
City/State/Zip:	MODESTO, CA 95354	Phone:	209.554.4602

Division of the State Architect

APPROVED
DIV. OF THE STATE ARCHITECT
APP: 02-119316 INC:
REVIEWED FOR
SS ☐ FLS ☐ ACS ☑
DATE: 03/24/2022

Office of the State Fire Marshal

OFFICE OF THE STATE FIRE MARSHAL
APPROVED FIRE AND PANIC ONLY
03/14/22
21-0498
Approval of this plan does not authorize or approve any omission or deviation from applicable requirements. Final approval is subject to field inspection. One set of approved plans shall be available on the project site at all times.

CSUS CHILD DEVELOPMENT CENTER

CALIFORNIA STATE UNIVERSITY, STANISLAUS
ONE UNIVERSITY CIRCLE
TURLOCK, CA 95382

ehdd.

PIER 1, BAY 2
THE EMBARCADERO
SAN FRANCISCO, CA 94111

INFO@EHDD.COM
+1 415-285-9193

Consultant

PEZZONI ENGINEERING, INC.
CONSULTING ELECTRICAL ENGINEERS
1150 9TH Street, Suite #1415 Modesto, CA 95354
PHONE: 209.554.4602
HTTP://WWW.PEZZENGR.COM

PEZZONI ENGINEERING, INC. © Copyrighted 2020

Stamp

Printing	Date
95% CONSTRUCTION DOCUMENTS	06.25.2021
PERMIT SET	08.16.2021
PERMIT SET - DSA V2	12.15.2021
PERMIT SET - SFM	12.21.2021

Revisions and Description	Date

Scale
AS NOTED

Drawn by
CCM / KP

EHDD Job Number
20020

Sheet Title

NRCC-SOLAR

Sheet Number

E10.4V3

8/6/2021 5:44:22 PM
12/15/21 11:45:44 AM F:\20\546 CSUS CHILD DEVELOPMENT CENTER\ENGR\SHEETS\546_E10.1 ENERGY COMPLIANCE FORMS.DWG cmendez

8/6/2021 5:44:22 PM

12/15/21 11:45:52 AM F:\20\546 CSUS CHILD DEVELOPMENT CENTER\ENGR\SHEETS\546_E11.1 EXTERIOR PHOTOMETRICS - SITE.DWG cmendez

NOTE:
ALL WORK NORTH OF CURB AT NORTH SIDE OF MELONES DRIVE SHALL BE PART OF THE CAMPUS UTILITY INFRASTRUCTURE PROJECT UNLESS OTHERWISE NOTED.

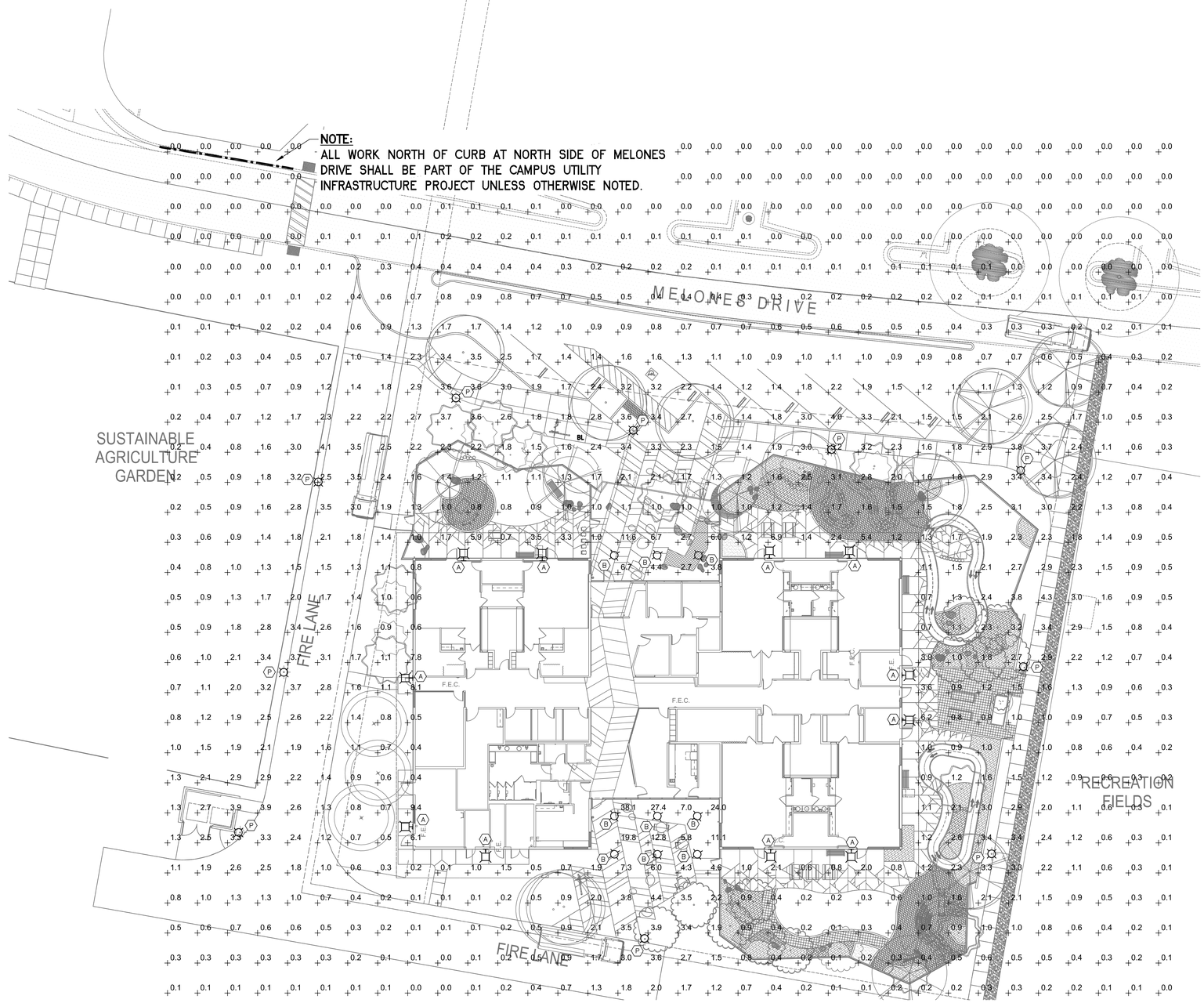

1 **OVERALL SITE PHOTOMETRICS**
SCALE: 1/16"=1'-0"

N

SCALE IN INCHES
0 1/16" 1/8" 1/4"

Division of the State Architect
APPROVED
DIV. OF THE STATE ARCHITECT
APP: 02-119316 INC:
REVIEWED FOR
SS☐ FLS☐ ACS☑
DATE: 03/24/2022

Office of the State Fire Marshal
OFFICE OF THE STATE FIRE MARSHAL
APPROVED FIRE AND PANIC ONLY
03/14/22
21-0498
Approval of this plan does not authorize or approve any omission or deviation from applicable regulations. Final approval is subject to field inspection. One set of approved plans shall be available on the project site at all times.

CSUS CHILD DEVELOPMENT CENTER

CALIFORNIA STATE UNIVERSITY, STANISLAUS
ONE UNIVERSITY CIRCLE
TURLOCK, CA 95382

ehdd.

PIER 1, BAY 2
THE EMBARCADERO
SAN FRANCISCO, CA 94111

INFO@EHDD.COM
+1 415-285-9193

Consultant

PEZZONI ENGINEERING, INC.
CONSULTING ELECTRICAL ENGINEERS
1550 3RD Street Suite #100 Modesto, CA 95354
PHONE: 209 .554. 4402
HTTP://WWW.PEZZONIE.COM

PEZZONI ENGINEERING, INC. © Copyrighted 2020

Stamp

REGISTERED PROFESSIONAL ENGINEER
KEVIN L. PEZZONI
No. 16209
ELECTRICAL
STATE OF CALIFORNIA

Printing	Date
95% CONSTRUCTION DOCUMENTS	06.25.2021
PERMIT SET	08.16.2021
PERMIT SET - DSA V2	12.15.2021
PERMIT SET - SFM	12.21.2021

Revisions and Description	Date

Scale
AS NOTED

Drawn by
CCM / KP

EHDD Job Number
20020

Sheet Title
OVERALL SITE PHOTOMETRICS

Sheet Number
E11.1V3

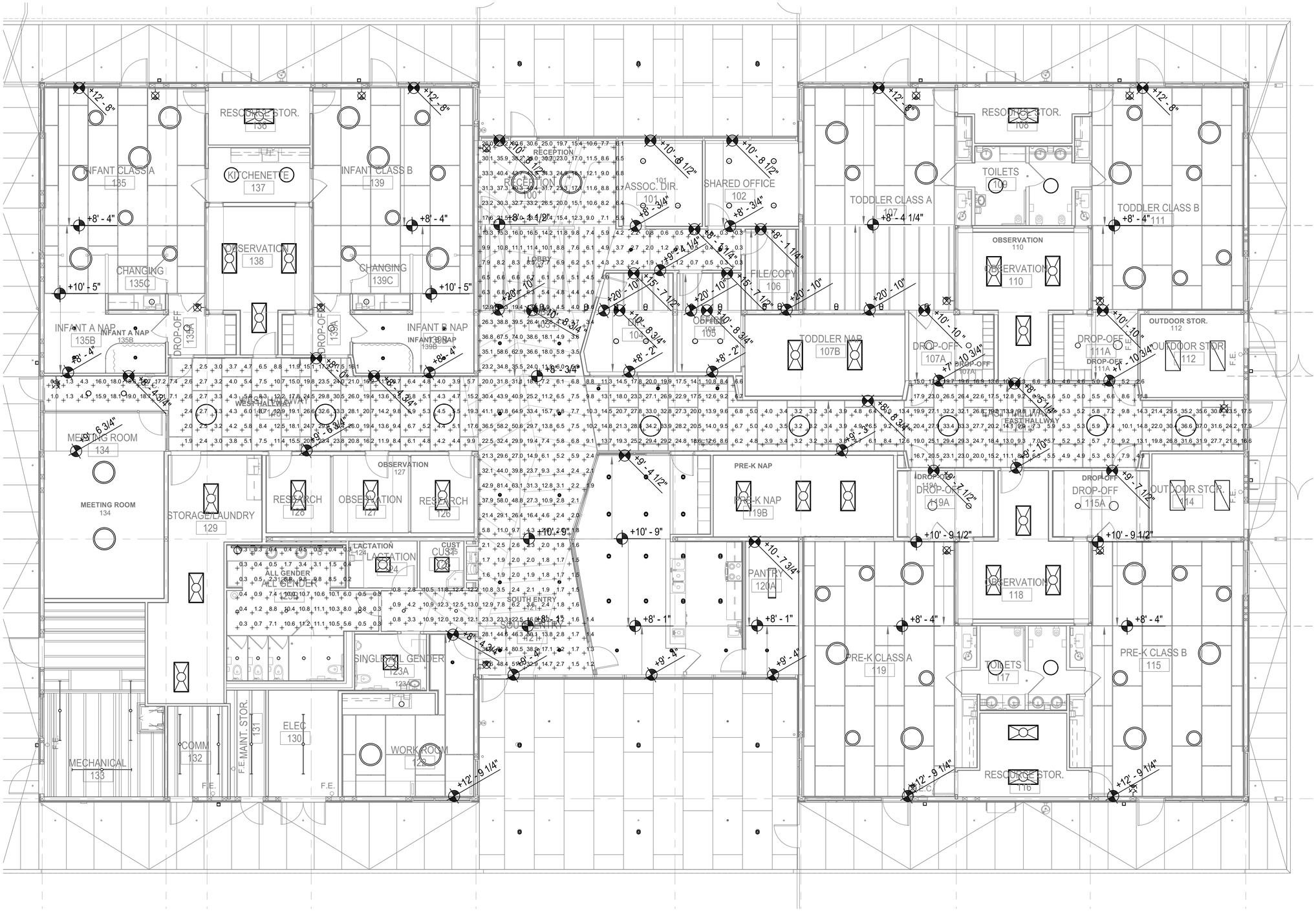

1 INTERIOR PHOTOMETRICS
SCALE: 3/16"=1'-0"

SCALE IN INCHES
0 3/32" 3/16" 3/8"

Division of the State Ar

APPROVED
DIV. OF THE STATE ARCHITECT
APP: 02-119316 INC:
REVIEWED FOR
SS ☐ FLS ☐ ACS ☑
DATE: 03/24/2022

Office of the State Fire Marshal

OFFICE OF THE STATE FIRE MARSHAL
APPROVED FIRE AND PANIC ONLY
03/14/22
21-0498
Approval of this plan does not authorize or approve any omission or deviation from applicable regulations. Final approval is subject to field inspection. One set of approved plans shall be available on the project site at all times.

CSUS CHILD DEVELOPMENT CENTER

CALIFORNIA STATE UNIVERSITY, STANISLAUS
ONE UNIVERSITY CIRCLE
TURLOCK, CA 95382

ehdd.

PIER 1, BAY 2
THE EMBARCADERO
SAN FRANCISCO, CA 94111

INFO@EHDD.COM
+1 415-285-9193

Consultant

PEZZONI ENGINEERING, INC.
CONSULTING ELECTRICAL ENGINEERS
1150 9TH Street, Suite #1415 Modesto, CA 95354
PHONE: 209 - 554 - 4602
HTTP://WWW.PEZENGR.COM

PEZZONI ENGINEERING, INC. © Copyrighted 2020

Stamp

REGISTERED PROFESSIONAL ENGINEER
KEVIN L. PEZZONI
NO. 16768
EXP. 12/23
ELECTRICAL
STATE OF CALIFORNIA

Printing	Date
95% CONSTRUCTION DOCUMENTS	06.25.2021
PERMIT SET	08.16.2021
PERMIT SET - DSA V2	12.15.2021
PERMIT SET - SFM	12.21.2021

Revisions and Description	Date

Scale
AS NOTED

Drawn by
CCM / KP

EHDD Job Number
20020

Sheet Title
INTERIOR PHOTOMETRICS

Sheet Number
E11.2V3

8/6/2021 5:44:22 PM

12/15/21 11:46:00 AM F:\20\546 CSUS CHILD DEVELOPMENT CENTER\ENGR\SHEETS\546_E11.2 INTERIOR PHOTOMETRICS - EGRESS.DWG cmendez