PROJECT MANUAL FOR

ADDAMS ES - INTERIM HOUSING

DSA Application **No.** 02-118888

FRESNO UNIFIED SCHOOL DISTRICT
4774 YALE AVENUE
FRESNO, CALIFORNIA 93704

PREPARED BY:

DARDEN ARCHITECTS, INC.
ARCHITECTURE•PLANNING•INTERIORS
6790 N. WEST AVENUE
FRESNO, CALIFORNIA 93711

IDENTIFICATION STAMP
DIV. OF THE STATE ARCHITECT
APP: 02-118888 INC:
REVIEWED FOR
SS ☑ FLS ☑ ACS ☑
DATE: 02/24/2021

LICENSED ARCHITECT
ANTONIO J. AVILA
No. C26235
Ren. 10-31-21
STATE OF CALIFORNIA

ARCHITECT:

REGISTERED PROFESSIONAL ENGINEER
RYAN W. CARLSON
M34846
Exp. 6-30-22
MECHANICAL
STATE OF CALIFORNIA

MECHANICAL ENGINEER:

REGISTERED PROFESSIONAL ENGINEER
C. SCOTT DAVIDSON
E17850
ELECTRICAL
STATE OF CALIFORNIA

ELECTRICAL ENGINEER:

REGISTERED PROFESSIONAL ENGINEER
LANE R. BADER
No. 47033
CIVIL
STATE OF CALIFORNIA

CIVIL ENGINEER:

END OF SECTION

PROJECT MANUAL
TABLE OF CONTENTS

PROCUREMENT AND CONTRACTING REQUIREMENTS GROUP

DIVISION 00 - PROCUREMENT AND CONTRACTING REQUIREMENTS

INTRODUCTORY INFORMATION

PROCUREMENT REQUIREMENTS
NOT USED
PROCUREMENT FORMS AND SUPPLEMENTS
NOT USED
CONDITIONS OF THE CONTRACT
NOT USED

SPECIFICATIONS GROUP

GENERAL REQUIREMENTS SUBGROUP

DIVISION 01 – GENERAL REQUIREMENTS

END OF SECTION

SECTION 002113.01 – SUPPLEMENTARY INSTRUCTIONS TO BIDDERS

PART 1 - GENERAL

1.1 SUMMARY

A. This Section includes the following:
   1. Supplementary Instructions to Bidders consisting of procedures and conditions for the use of documents of various types and formats for bidding of this project.

B. Related Sections: The following Project Manual Sections contain requirements that relate to this section:
   1. ALL DIVISION 00 SPECIFICATION SECTIONS.
   2. ALL DIVISION 01 SPECIFICATION SECTIONS.
   3. ALL SPECIFICATION SECTIONS IN THE FACILITY SERVICES SUBGROUP.
   4. ALL SPECIFICATION SECTIONS IN THE SITE AND INFRASTRUCTURE SUBGROUP.

1.2 DEFINITIONS

A. Hard Copy Format: Documents printed on paper medium.

B. Electronic Image Format: Electronic Files consisting of Bid Documents in an image format such as PDF's, TIFF's and etc. These files are to be READ ONLY.

1.3 SUBMITTALS

A. Submit in accordance with the following:
   1. Bidder's Usage Agreement for Bid Documents:
      a. Hard Copy Format Form – see attachment.
      b. Hard Copy and Electronic Image Format Form – see attachment.
   2. Bidder's Usage Agreement for Partial Documents.
      a. Bidder's Usage Agreement for Partial Bid Documents Form – see attachment.

PART 2 - PRODUCTS (NOT APPLICABLE)

PART 3 - EXECUTION

3.1 SCHEDULES (Forms):

A. BIDDER'S USAGE AGREEMENT FOR BID DOCUMENTS:
   1. HARD COPY FORMAT: When the Bid Documents are being issued in a printed medium, the HARD COPY FORMAT FORM shall be used.

a. This form shall be submitted and signed as a condition of receiving Bid Documents.

2. HARD COPY AND ELECTRONIC IMAGE FORMAT: When the Bid Documents are being issued electronically, the HARD COPY AND ELECTRONIC IMAGE FORMAT FORM shall be used.
   a. This form shall be submitted and signed as a condition of receiving Bid Documents.

3.2 BIDDER'S USAGE AGREEMENT FOR BID DOCUMENTS HARD COPY FORMAT

A. Project Name: _____

B. DA Project No.: _____

C. I, _____, as duly authorized agent of

D. _____ ("Bidder") as prospective bidder on the above named project ("Project") is requesting a copy of the project BID DOCUMENTS (bidding requirements, contract requirements, specifications, contract drawings, resource drawings if any, and addenda to date).

E. Bidder's Usage Agreement:

1. Bidder is being provided copies of Bid Documents for the Project in a Hard Copy Format, acknowledges that Bid Documents are being provided as the official record set of documents issued for bidding. It is the Bidder's responsibility to review and obtain all information from the Bid Documents necessary for a complete and accurate bid. This request is subject to the following conditions, which the Bidder hereby agrees to abide by:
2. Bidder shall pay a refundable deposit for the Bid Documents in the amount of $_____ per set. In the event the Bidder is not the successful bidder, the bidder agrees to return all Bid Documents within 15 calendar days after the bid date. If the Bid Documents are not returned within 15 calendar days after the bid date, the Bidder will forfetit the deposit.
3. Bidder acknowledges that these Bid Documents will be re-issued as Construction Documents following the bid. The Bidder agrees to return all Bid Documents in "Good Condition" with all the sheets unmarked and in their original order. The returned Bid Documents will be reviewed and the condition of the Bid Documents will be determined. If the Bid Documents are determined to be in "Good Condition", the Bidder's Deposit will be returned.
4. In the event that the Bid Documents are returned and are not in "Good Condition", the Bidder understands that the Architect and Architect's Consultants will incur certain costs in replacement of missing items and to repair the Bid Documents to their original condition, in order to be issued as Construction Documents. The bidder agrees to pay the Design Team a service fee of $105.00 an hour (with a two-hour minimum of $210.00). The service fee will be deducted from the Bidder's deposit, and the remainder refunded to the Bidder.
5. Bidder understands and agrees the Bid Documents are instruments of Architect's and Architect's Consultants' **("Design Team")** professional service and are intended for one-time use by Bidder in the bidding of the Project. All information contained in the Bid Documents are and shall remain the property of the Design Team, who is deemed to be the author of the drawings and data, and the Design Team shall retain all common law, statutory law, and all other rights, including copyrights, with respect to Bidder.

6. The Bidder shall indemnify and hold harmless, the Design Team, its officers, directors, employees or subcontractors, to the fullest extent permitted by law, against all claims, liabilities, losses, damages, and costs, including but not limited to attorney's fees and defense costs arising out of or resulting from Bidder or any other person or entity that gains information from the Bid Documents or copies any part of the Bid Documents, or uses the Bid Documents or copies any part of the Bid Documents, for purposes other than the bidding of this project, and will be liable to the Design Team for fees equal to the fees paid by the client pursuant to developing the documents for this project.

F. DARDEN ARCHITECTS, INC.

G. Number of Sets Requested:_____

H. _____ _____
Print Name (Bidder) Title

I. _____ _____
Signature Date

3.3 BIDDER'S USAGE AGREEMENT FOR BID DOCUMENTS HARD COPY AND ELECTRONIC IMAGE FORMAT

A. Project Name: _____

B. DA Project No.: _____

C. I, _____, as duly authorized agent of

D. _____ ("Bidder") as prospective bidder on the above named project ("Project") is requesting a copy of the project BID DOCUMENTS (bidding requirements, contract requirements, specifications, contract drawings, resource drawings if any, and addenda to date).

E. Bidder's Usage Agreement:

1. Bidder is being provided copies of Bid Documents for the Project, which consists of two parts. One part of the Bid Documents is in the Hard Copy Format ("HCF") and the other part is in the Electronic Image Format ("EIF") on CD-ROM. Bidder acknowledges that HCF Documents and the EIF Documents are being provided as the official record set of documents issued for bidding. It is the Bidder's responsibility to review and obtain all information from both the HCF and the EIF documents necessary for a complete and accurate bid. This request is subject to the following conditions, which the Bidder hereby agrees to abide by:
2. Bidder shall pay a non-refundable deposit for the Bid Documents in the amount of $_____. In the event the Bidder is not the successful bidder, the bidder agrees to permanently dispose of the HCF and EIF on the Project CD-ROM.
3. Bidder acknowledges that neither the EIF documents nor the CD-ROM will be updated by the Design Team. The CD-ROM contains the original documents and will not be updated regardless of when Bidder obtains the CD-ROM. Any changes to the contract documents will be issued as a separate document.
4. Bidder is further warned that while the EIF information appears to be extremely accurate, this apparent accuracy is an artifact of the techniques used to generate it and is no way intended to imply actual accuracy. The Bidder acknowledges and takes full responsibility for the accuracy, correctness of measurements, areas, inventories derived, conclusions drawn, and information extracted from the EIF documents.
5. Bidder understands and agrees the HCF and EIF documents are instruments of Architect's and Architect's Consultants' **("Design Team")** professional service and are intended for one-time use by Bidder in the bidding of the Project. All HCF and EIF documents are and shall remain the property of the Design Team, who is deemed to be the author of the drawings and data, and the Design Team shall retain all common law, statutory law, and all other rights, including copyrights, with respect to Bidder.

6. The Bidder shall indemnify and hold harmless, the Design Team, its officers, directors, employees or subcontractors, to the fullest extent permitted by law, against all claims, liabilities, losses, damages, and costs, including but not limited to attorney's fees and defense costs arising out of or resulting from Bidder or any other person or entity that gains information from the Bid Documents or copies any part of the Bid Documents, or uses the Bid Documents or copies any part of the Bid Documents, for purposes other than the bidding of this project, and will be liable to the Design Team for fees equal to the fees paid by the client pursuant to developing the documents for this project.

F. DARDEN ARCHITECTS, INC.

G. Description of the HCF Documents and the EIF Documents on CD-ROM, provided:

H. _____

I. _____

J. _____

K. _____ _____
Print Name (Bidder) Title

L. _____ _____
Signature Date

3.4 BIDDER'S USAGE AGREEMENT FOR PARTIAL BID DOCUMENTS

A. Project Name: _____

B. DA Project No.: _____

C. I, _____, as duly authorized agent of

D. _____ ("Bidder") as prospective bidder on the above named project ("Project"). The Bidder acknowledge having received at least one (1) complete set of the Bid Documents for the subject project and all Addenda issued to date in either Hard Copy Format ("HCF") and/or an Electronic Image Format ("EIF").

E. Bidder's Usage Agreement:

1. The Bidder is requesting partial copies of the Bid Documents ("Partial Documents") in the format originally issued and that was prepared by the Architect and/or Architect's Consultants ("Design Team") on the subject Project, so that the information therein may be utilized in the Bidder's work on the same project. The Partial Documents are strictly intended for the Bidder's convenience and are not recognized as part of the official record set of Bid Documents issued for bidding. This request is subject to the following conditions, which the Bidder hereby agrees to abide by:
2. The Bidder shall pay for all costs in reproducing the requested Partial Documents directly to the Printers. In the event that the Bidder is not the successful bidder, the Bidder agrees to permanently dispose of the Partial Documents.
3. The Bidder recognizes that the value of the Partial Documents far exceeds the cost of printing. The Bidder further agrees that the Bidder will make no other copies of the Partial Documents. Any copying, and/or reuse of the Partial Documents without written authorization of Darden Architects, Inc. is prohibited.
4. The Bidder understands that the accuracy of the information is an artifact of the techniques used to generate it and is in no way intended to imply actual accuracy. The Bidder agrees that by using these Partial Documents, the Bidder is in no way relieved of the responsibility to review and obtain all information from the complete set of the Bid Documents necessary for a complete and accurate bid.
5. The Bidder understands and agrees to that any documents provided are instruments of the professional service by the Design Team and are intended for one-time use solely in the bidding of this Project. They shall remain the property of the Architect or the Architect's Consultants, who is deemed to be the author of the documents and who shall retain all common law, statutory law, and all other rights, including copyrights, with respect to the Bidder.
6. The Bidder shall indemnify and hold harmless, the Design Team, its officers, directors, employees or subcontractors, to the fullest extent permitted by law, against all claims, liabilities, losses, damages, and costs, including but not limited to attorney's fees and defense costs arising out of or resulting from Bidder or any other person or entity that gains information from the Partial Documents or copies the Partial Documents, or uses the Partial Documents or copies the Partial Documents, for purposes other than the bidding of this project, and will be liable to Design Team for fees equal to the fees paid by the client pursuant to developing the documents for this project.

7. In the event that the Bidder is a successful bidder, the Bidder agrees that all Bid Documents issued to the Bidder, and Partial Documents obtained by the Bidder, along with any other documents utilized by the Bidder in preparing the bid, will be included in the Escrow Bid Documents when required by the General Conditions. Any and all documents prepared and issued by the Design Team, which are included as part of the Escrow Bid Documents, will be returned to Darden Architects, Inc. at the close of escrow.

F. Darden Architects, Inc.

G. Description of the requested documents:

H. _____

I. _____

J. _____

K. _____

L. _____

M. _____

N. _____ _____
Print Name, (Bidder) Title

O. _____ _____
Signature Dated

END OF SECTION

SECTION 011113 – SUMMARY OF WORK

PART 1 - GENERAL

1.1 SUMMARY

A. Work included: Construction of BASE BID portions of the work for Addams Interim Housing, FRESNO, California. BASE BID portions of the work is defined as all material, labor, equipment and services necessary to do all work shown on the drawings and called for in the Specifications.

B. This Section includes the following:
   1. Provide all material, labor, equipment and services necessary to completely install all materials, accessories and other related items necessary to complete the Project as indicated by the Contract Documents.

C. Related Sections: The following Project Manual Sections contain requirements that relate to this section:
   1. ALL DIVISION 00 SPECIFICATION SECTIONS.
   2. ALL DIVISION 01 SPECIFICATION SECTIONS.
   3. ALL SPECIFICATION SECTIONS IN THE FACILITY CONSTRUCTION SUBGROUP.
   4. ALL SPECIFICATION SECTIONS IN THE FACILITY SERVICES SUBGROUP.
   5. ALL SPECIFICATION SECTIONS IN THE SITE AND INFRASTRUCTURE SUBGROUP.

1.2 DEFINITIONS

A. The words "OWNER" and "DISTRICT" are synonymous and interchangeable, when used throughout this Project Manual.

1.3 WORK UNDER OTHER CONTRACTS

A. General Requirements:
   1. Work under separate contracts will occur throughout the duration of the project. The work being installed under separate contracts will occur around adjacent to the Contract project site including offsite work.
   2. Contractor shall be responsible for coordinating access to and from the site throughout the duration of the project. Access points to and from the site may vary, based upon timing and duration of separate contracts.
   3. Contractor shall cooperate and coordinate all work under this Contract with all work under separate contracts.
   4. Should the Contractor damage and/or otherwise alter work installed under separate contracts, Contractor responsible for the correction repair of work installed under separate contracts.
   5. Prior to the installation of the Work, coordinate the work installed or to be installed by separate contracts relative to own work.

B. Separate Contracts by Owner:
   1. Owner Furnished Items, as defined in Specification Section – OWNER-FURNISHED ITEMS.

1.4 QUALITY ASSURANCE

A. Contractor's Duties:
   1. Except as specifically noted, provide and pay for:
      a. Labor, material and equipment.
      b. Tools, construction equipment and machinery.
      c. Heat and utilities required for construction. See Specification Section - TEMPORARY FACILITIES AND CONTROLS.
      d. Other facilities and services necessary for proper execution and completion of Work.
   2. Pay legally required sales, consumer and use taxes.
   3. Secure and pay for all site specific as necessary for proper execution and completion of Work.
      a. Licenses.
      b. Permits and Fees.
      c. Government Fees .
      d. Royalties.
   4. Give required notices.
   5. Comply with codes, ordinances, rules, regulations, orders and other legal requirements of public authorities which bear on performance of Work.
      a. The Contractor shall certify in writing that no materials containing Asbestos are incorporated in the work, in accordance with the Asbestos Hazard Emergency Regulations Act.
   6. Promptly submit written notice to Architect of observed variance.
   7. Enforce strict discipline and good order among employees. Do not employ on Work:
      a. Unfit persons.
      b. Persons not skilled in assigned task.

1.5 PROJECT CONDITIONS

A. Future / Concurrent Contracts:
   1. Coordinate all work as indicated in Specification Section – OWNER-FURNISHED ITEMS.

B. Work under other separate Contracts may occur concurrently with and/or adjacent to the work of this Contract.

C. This Contractor shall coordinate it's work with the work of these separate Contracts and shall cooperate with the Contractors of these separate Contracts as they occur.

D. Contractor Use of Premises:
   1. Confine operations at sites to areas permitted by:
      a. Laws
      b. Ordinances
      c. Permits

d. Contract Documents

2. Do not unreasonably encumber site with materials or equipment.
3. Do not load structure with weight that will endanger structure.
4. Assume full responsibility for protection and safekeeping of Contractor's and Owner's material stored on premises, and keep the site and building secure at all times.
5. Obtain and pay for use of additional storage or Work areas needed for operations.
6. Limit use of site for Work and storage.

PART 2 - PRODUCTS

NOT APPLICABLE

PART 3 - EXECUTION
NOT APPLICABLE

END OF SECTION

SECTION 012500 -- SUBSTITUTION PROCEDURES

PART 1 - GENERAL

1.1 SUMMARY

A. This Section includes the following:
   1. Work that is substituted for Work specified in DIVISIONS 02 through 49 shall meet the requirements of this Section.
   2. Provide all material, labor, equipment and services necessary to completely install all approved substituted materials, accessories and other related items necessary to complete the Project as indicated by the Contract Documents.

B. Related Sections: The following Project Manual Sections contain requirements that relate to this section:
   1. ALL DIVISION 00 SPECIFICATION SECTIONS.
   2. ALL DIVISION 01 SPECIFICATION SECTIONS.
      a. 01 25 13.01 Product Substitution Procedure (FUSD)
   3. ALL SPECIFICATION SECTIONS IN THE FACILITY CONSTRUCTION SUBGROUP.
   4. ALL SPECIFICATION SECTIONS IN THE FACILITY SERVICES SUBGROUP.
   5. ALL SPECIFICATION SECTIONS IN THE SITE AND INFRASTRUCTURE SUBGROUP.

1.2 DEFINITIONS

A. Claimant: Bidder, Sub-Contractor, Contractor, Distributor, Supplier, Manufacturer or other entity that is submitting a claim for a substitution.

B. Substitutions: Substitutions are not a part of the Submittal Process described in Specification Section – SUBMITTAL PROCEDURES. Substitution Requests by a claimant must be reviewed and approved by the Architect before any submittal will be accepted. It is the claimant's responsibility to provide clear and concise documentation to expedite the Architect's review. If the Substitution Request requires re-submission(s) due to the Claimant's inadequate documentation, no time extension will be allowed.

C. "Or Equal" / "Or Approved Equivalent": Claimant shall request a substitution in accordance with this Specification Section – SUBSTITUTION PROCEDURES.

D. The Project Manual employs the following methods of specifying products. Claimant shall conform to the directives below for this Project:
   1. Product, system or design specified only by reference standards:
      a. Select any product, system or design meeting reference standards.
   2. Product, system or design specified by naming several products, systems, designs and/or manufacturers:
      a. Select any product, system, design and/or manufacturer named.
   3. Product, system or design specified by naming several products, systems and/or manufacturers and reference standards:

a. Products, systems, designs and/or manufacturer names indicate products, systems, designs and/or manufacturers that (in the Architect's opinion) meets the reference standards.
b. Select any of the named manufacturer's products, systems or designs meeting the reference standards.

4. Product, system or design specified by naming one or more products, systems, designs and stating "or equal to", "or approved equivalent" with the specified products, systems or designs:
   a. Select product, system or design specified, "or approved equivalent".
5. Product, system or design specified by naming only one product, system or design:
   a. Select product, system or design specified, "or approved equivalent".
6. Product, system or design specified by naming only one product, system or design and followed by the statement "DISTRICT STANDARD – NO SUBSTITUTIONS":
   a. Provide product, system or design specified. No substitutions allowed.

1.3 SUBMITTALS

A. Submit in accordance with Specification Section - INSTRUCTIONS TO BIDDERS:

B. Content of Request:
1. Complete the attached **SUBSTITUTION REQUEST FORM** substantiating compliance of proposed substitution with Contract Documents. **NO OTHER FORMS WILL BE ACCEPTED.**
2. Attach to the SUBSTITUTION REQUEST FORM an itemized comparison of proposed substitution with product, system or design specified.
3. For products or systems, attach to the SUBSTITUTION REQUEST FORM:
   a. Product, system or design identification, including manufacturer's name and address.
4. Manufacturer's product information: MUST BE HIGHLIGHTED AND PROJECT SPECIFIC. SUBMITTALS NOT ADEQUATELY MARKED-UP ACCORDING TO PROJECT SPECIFICS WILL BE REJECTED:
   a. Literature including product, system or design description, performance and test data and reference standards.
   b. Samples.
   c. Warranties.
5. For construction methods, attach to the SUBSTITUTION REQUEST FORM:
   a. Detailed description of proposed methods.
   b. Drawings illustrating methods.

C. Submit three (3) copies of Substitution Request including all attached data.

1.4 QUALITY ASSURANCE

A. Qualifications:
1. Product, system or design qualifications:
   a. In making a request for substitution, Claimant certifies that:
      1) Claimant has personally investigated proposed product, system or design, and determined that it is equal or superior in all respects to that specified.
      2) Claimant shall provide the same guarantee or warranty for substitution as for product, system or design specified.

3) Claimant shall coordinate installation of accepted substitution into the Project, making such changes as may be required for the Project to be complete in all respects.
4) Claimant waives all claims for additional costs related to substitution which subsequently become apparent for integrating the substituted product, system or design into the Project.
5) Claimant waives all claims for time extension(s) due to improper documentation requiring re-submission(s) of a Substitution Request Review.

B. Regulatory Requirements:
1. In accordance with Specification Section - REGULATORY REQUIREMENTS, and the following:
a. Products (and installation standards), systems or methods used for this Project shall comply with CARB standards in effect at the Project Site, and at the time of installation.

C. Acceptance of Substitutions:
1. Procedures:
a. The Contract is based on products, systems or designs described in the Contract Documents.
b. Architect will consider proposals submitted in accordance with time limits set within the Specification Section - INSTRUCTIONS TO BIDDERS.
c. Architect is solely responsible for judging the acceptance of substitutions.
1) Acceptance of a substitution does not waive the product manufacturer's responsibility for product liability. The Architect will judge (based on the substitution submission data) for function and use – product liability shall remain the responsibility of the product manufacturer.
d. Substitute products, systems or designs shall not be used unless the substitutions have been specifically approved for this Project by the Architect.
1) Substitute products, systems or designs that are related to structural, fire and life safety or access compliance shall not be used unless such substitution have been specifically approved for this Project by the Architect and the appropriate authority having jurisdiction.
2. Substitutions will not be considered if:
a. They are indicated or implied on product submittals in accordance with Specification Section - SUBMITTAL PROCEDURES. Substitutions are not Submittals, and must be reviewed and approved prior to being submitted as a Submittal.
b. Acceptance will require substantial revision of Contract Documents.
c. They are submitted after the date set for substitutions within this Contract, unless:
1) The specified or drawing item that has been verified to be discontinued or is otherwise unavailable.
2) The Owner proposes a cost savings for the product, system or method.
3) The Owner proposes early occupancy, and the proposed substitution allows for that convenience.

PART 2 - PRODUCTS
NOT APPLICABLE

PART 3 - EXECUTION

3.1 SCHEDULES

A. Substitution Request Form:
   1. See the form attached to the end of this section.
   2. The attached form will be reproduced (and sequentially numbered by the Contractor after the award of the Contract) by the Claimant for any and all proposed substitutions.
   3. **<u>NO OTHER FORMS WILL BE ACCEPTED.</u>**

(Attachment)
SUBSTITUTION REQUEST FORM

TO: DARDEN ARCHITECTS, INC.
6790 N. West Avenue
Fresno, CA 93711

CHECK APPROPRIATE LINE:
_____ Substitution Request Prior to Bid (During Bid Period)
_____ Product or System Substitution
_____ Design Change Substitution
_____ Substitution Request After Award of the Contract
_____ Product or System Substitution
_____ Design Change Substitution

The Contractor Awarded the Contract for this Project shall assign sequential Substitution Request # below.

Leave blank if submitted during the Bid Period.
SUBSTITUTION REQUEST #_____
WE HEREBY SUBMIT FOR YOUR CONSIDERATION THE FOLLOWING PRODUCT OR METHOD AS SUBSTITUTION FOR THE SPECIFIED OR DRAWING ITEM FOR THIS PROJECT:
PROJECT: _____
SPECIFIED ITEM: _____

_____	_____	_____	_____
Specification Section #	Page #	Paragraph #	Description

OR
DRAWING ITEM: _____

_____	_____	_____
Drawing #	Detail Cut #	Description

PROPOSED CREDIT IF ANY: _____
PROPOSED SUBSTITUTION:
_____
_____
_____
_____
Attached data includes product description, specifications, drawings, photographs, performance and test data adequate for evaluation of the request; applicable portions of the data are clearly identified. Attached data also includes a description of changes to the Contract Documents to which the proposed substitution will require for its proper installation.

The undersigned claimant certifies: (Modifications by the claimant to the following list is cause for automatic rejection without further review)

4. The proposed substitution does not affect dimensions shown on drawings or code requirements indicated.
5. The proposed substitution will have no adverse affect on other trades, the construction schedule, or specified warranty requirements.
6. Maintenance and service parts will be locally available for the proposed substitution.
7. Attach information for a minimum of three projects where the substitution has been used locally within a 200 mile distance of this project, including names, addresses and telephone numbers of Owners who have accepted this product into their projects.
8. Attach all cost data with explanations if different from Specified or Drawing item. Include in that explanation a discussion on quality of proposed substitution and cost differential.
9. The undersigned claimant shall pay for any subsequent changes in incorporating the proposed substitution that were not apparent at the time of approval into the Work, including compensation to the Architect as described in item 2 above.

The undersigned Claimant(s) declares under penalty of perjury per the California Government Code Section 12650, et seq., that the claim of function, appearance and quality are equivalent or superior to the specified or drawing item, and further know and understand that submission for certification of a false claim may lead to fines, imprisonment and/or other severe legal consequences.

SUBMITTED BY CLAIMANT:

Signature_____
Firm_____
Address_____
_____
Date_____
Telephone_____

ADDITIONAL CLAIMANT SIGNATURE REQUIRED:

The Contractor or Construction Manager if submitted after the Award:
Signature_____
Firm_____

DESIGN CONSULTANT USE ONLY:
___ Accepted
___ Accepted as Noted
___ Not Accepted
___ Received Past Time Period Allowed by Public Contract Code #3400.
By _____Date _____
Remarks_____

END OF SECTION

SECTION 012973 -- SCHEDULE OF VALUES

PART 1 - GENERAL

1.1 RELATED DOCUMENTS

A. Refer to the FUSD Bid Package and General Conditions.

B. Drawings and general provisions of the Contract, including General and Supplementary Conditions and other Division 01 Specification Sections, apply to this Section.

1.2 SUMMARY

A. This section includes the administrative and procedural requirements necessary to prepare and process the following:
   1. Schedule of Values
      a. Schedule of Bid Values.
      b. Complete Schedule of Values.
   2. Unit Price Schedules.

B. Related Requirements: The following Project Manual Sections contain requirements that relate to this section:
   1. Architectural Division 01 General Requirements:
      a. 011113-SUMMARY OF WORK.
      b. 012113-ALLOWANCES
      c. 012300-ALTERNATES.
      d. 013216-CONSTRUCTION SCHEDULE.
      e. 013300-SUBMITTAL PROCEDURES.
      f. 014100-REGULATORY REQUIREMENTS

1.3 DEFINITIONS

A. Activity: A discrete part of a project that can be identified for planning, scheduling, monitoring and controlling the construction project. Activities included in a Schedule of Values and Payment Request consume cost for time and resources.

B. Activity Code: Identifies each activity so as to be organized, group and sorted into Sub-Schedules, Areas of Work, and Reports.

C. Allowances: Contract amounts allocated for specific activities of the project as identified in the contract documents.

D. Application for Payments: A statement furnished by the Contractor allocating portions of the Contract Sum to various portions of the Work stipulating the amount of work that has been completed to date.

E. Contingency: Contract amounts allocated for non-specific activities, to cover changes in the contract document work, unforeseen conditions and added scope of work to the project.

F. Major Scope: Significant portions of work identified as, but not limited to, Base Bid, Alternate Bids, and Construction Phases, and Funding Criteria.

G. Responsible Party: Entity that is responsible for performing the work of each activity as identified, but not limited to, General Contractor, and Sub-Contractor, second and tertiary tier Sub-Contractors, Manufacturers, Fabricators and Vendors.

H. Schedule of Values: A statement furnished by the Contractor allocating portions of the Contract Sum to various portions of the Work.

I. Scope Type: Segments of work identified as, but not limited to, Building ID, On-Site, and Off-Site.

J. Sub-Schedules: Separated activities identified as part of the same element of work and arranged to show correlation with related elements.

1.4 SUBMITTALS

A. General:
1. Submit in accordance with Specification Section - SUBMITTAL PROCEDURES.

B. Format for Submittals: A tabular form type schedules.
1. Provide a working electronic copy of schedule file.
   a. Provide schedule files on Compact Disc (CD) or Digital Versatile Disc (DVD) (WINDOWS Formatted Disks) in a form that can be reviewed and used by the Owner, and Architect.
2. Provide PDF electronic copy of schedule file.
3. Provide **(Two)** paper copies of schedules.
   a. Sheet size shall be of adequate size to clearly show the required information for the entire construction period.
   b. All required documentation shall have the Submittal number posted in the upper-right hand corner of the page.

C. Assurance/Control Submittals:
1. Schedule of Values.
   a. Schedule of Bid Values.
      1) Submit within **fourteen (14)** days after the Award of Contract.
   b. Complete Schedule of Values.
      1) Submit at the earliest possible date, but no later than **fifteen (15)** days prior to the date scheduled for submittal of initial Application for Payment.
2. Application for Payment and Certification.
   a. Application for Payment and Certification Forms.
      1) Submit along with the Complete Schedule of Values submittal.
   b. Initial Application for Payment.
      1) Submit **seven (7)** days prior to due date.
   c. Application for Payment for Progress of Work.
      1) Submit by the Insert day of the month.
   d. Application for Payment at Substantial Completion.
      1) Submit after Architect issues the Certificate of Substantial Completion.

e. Final Application for Payment.
   1) Submit after competing Project Closeout requirements.

1.5 SYSTEM DESCRIPTON

A. General:
1. The Architect considers the project Schedule of Values requirements to be significant to both the Contractor and the Owner. The development, submittal, and acceptance of the Schedule of Values, (Bid and Complete), and subsequent development and maintenance of the Application for Payments must be given high priority.
   a. No payment will be made without the Architect's review and acceptance of the Schedule of Values.
   b. Progress payments may be withheld in whole or part should the Contractor fail to comply with the requirements of this section.
   c. No separate payment will be made to the Contractor for any of the requirements of this section. All such costs shall be part of the Contractor's planned project overhead costs included in its bid.

B. Performance Requirements:
1. Schedule of Bid Values: The Schedule of Bid Values shall be a breakdown of the Bid(s) submitted in the Bid Proposal and shall include all work that was bid on, regardless the scope of work awarded for construction. The breakdown shall be sufficient for the use by the Owner and Owner's Consultants to evaluate and determine cost of major scopes of work and the value of other owner agreements that are associated with the dollar value of the bid proposal.
   a. Refer to Specification Section – SUMMARY OF WORK.
   b. Refer to Specification Section – ALLOWANCES.
   c. Refer to Specification Section – ALTERNATES.
2. Complete Schedule of Values: Breakdown of the Contract Sum by specific line-item values, based on the individual activities in the Baseline Project Construction Schedules and to be the basis for the development of the Application for Payment.
   a. Refer to Specification Section – CONSTRUCTION SCHEDULES.
3. Application for Payments: Shall be derived from Baseline Project Construction Schedule utilizing the costs in the Complete Schedule of Values, and from subsequent Project Construction Schedule Updates, reflecting the Work performed as of planned and actual dates.
   a. Refer to Specification Section – CONSTRUCTION SCHEDULES.

1.6 QUALITY ASSURANCE

A. Qualifications:
1. The Contractor must have the capacity and capability of supporting the project by producing schedule-related data within **two (2)** days of request by the Architect, or Owner.

B. Regulatory Requirements:
1. In accordance with Specification Section - REGULATORY REQUIREMENTS.

PART 2 - PRODUCTS

2.1 GENERAL REQUIREMENTS

A. Coordination:
1. Coordinate preparation of the Schedule of Bid Values with the submitted Bid Proposal and reflect the major scope of work breakdown described in Specification Section – SUMMARY OF WORK and **Specification Section – ALTERNATES,** .
2. Coordinate preparation of the Complete Schedule of Values with the preparation of the Baseline Project Construction Schedule. Refer to Specification Section – CONSTRUCTION SCHEDULES.
3. Correlate line items in the Complete Schedule of Values with other required administrative forms and schedules, including, but not limited to, the following:
   a. Application for Payment forms with continuation sheets.
   b. Submittals Schedule.
   c. Items required to be indicated as separate activities in the Baseline Project Construction Schedule.

B. Project Information:
1. Identification: Include the following Project Identification on all Schedule of Values and Application for Payment.
   a. Project Name and Location.
   b. Name of Owner and Address.
   c. Name of Architect and Address.
   d. Architect's Project Number.
   e. Contractor's Name and Address.
   f. Submittal Date.

2.2 SCHEDULE OF BID VALUES

A. Format:
1. Arrange the Schedule of Bid Values in tabular form.
   a. Provide and identify separate columns to indicate the following ;
      1) SPECIFICATION SECTION.
      2) DESCRIPTION.
      3) RESPONSIBLE PARTY.
      4) MAJOR SCOPE.
      5) DOLLAR VALUE.
      6) PERCENTAGE OF THE CONTRACT SUM.
   b. Provide and identify separate line-items to indicate the following;
      1) Activity.
      2) Contract Conditions.
      3) Allowance(s).
      4) Contingency (ies).
      5) Grand Totals.

B. Content:

1. SPECIFICATION SECTION: Use the specification section number in the Project Manual Table of Contents to identify and establish each line-item.
2. DESCRIPTION: Provide a description of the work for each line-item associated with the specification section and responsible party.
3. RESPONSIBLE PARTY: Identify the responsible party for performing the work of each line-item associated with the specification section and description.
4. MAJOR SCOPE: Designate Major scope of work as identified and itemized in BID PROPOSAL.
   a. Provide separate columns for each Major Scope of Work identified.
5. DOLLAR VALUE: Sub-Total of the cost for each activity line-item, with the amounts rounded to the nearest dollar.
   a. Assign a dollar value for each line-item to each Major Scope of the project excluding General Conditions, General Requirements and General Contractor's Overhead and Profit.
6. PERCENTAGE OF THE CONTRACT SUM: Dollar Value as a percentage of the Contract Sum to the nearest one-hundredth percent, adjusted to total one hundred percent.
7. Activity: Provide at least one activity item-line for the work in each Specification Section.
   a. Provide separate activity line items for each Contractor or Subcontractor providing work under the same specification section.
8. Contract Conditions:
   a. Identify and provide separate activity line-item for cost items that are directly related to Division 01 - GENERAL REQUIREMENTS.
   b. Identify and provide separate activity line-item for cost items that are directly related to Division 00 - CONDITIONS OF THE CONTRACT.
9. Allowances: Identify and provide separate activity line-item for each Allowance that is assigned for specific work in any specification section. Dollar value to exclude General Contractor's Overhead and Profit.
10. Contingencies: If required, identify and provide separate activity line-item for each Contingency that is not assigned to specific work in any specification section. Dollar value to exclude General Contractor's Overhead and Profit.
    a. If required, provide separate line items for Owner Contingency and Contractor Contingency.
11. Grand Total: Summation of dollar value for each column equal to the Bids received.

2.3 COMPLETE SCHEDULE OF VALUES

A. Format:
   1. Provide a comprehensive, fully developed, detailed Complete Schedule of Values in tabular form.
      a. Provide and identify the following separate columns to indicate the following for each item listed;
         1) SPECIFICATION SECTION.
         2) ACTIVITY CODE.
         3) DESCRIPTION.
         4) RESPONSIBLE PARTY.
         5) MAJOR SCOPE.
         6) SCOPE TYPE.
         7) DOLLAR VALUE.
      b. Provide and identify separate line-items to indicate the following;

1) Activity.
2) Sub-Schedules.
3) Contract Conditions.
4) Allowance(s).
5) Purchase Contracts (if applicable).
6) Contingency (ies).
7) Grand Totals.

B. Content:
1. SPECIFICATION SECTIONS: As described in the Schedule of Bid Values.
2. ACTIVITY CODE: Provide the Activity Identification Code for each line-item indicated as separate activities in the Baseline Project Construction Schedule.
3. DESCRIPTION: As described in the Schedule of Bid Values
4. RESPONSIBLE PARTIES: As described in the Schedule of Bid Values.
5. MAJOR SCOPE: As described in the Schedule of Bid Values.
6. SCOPE TYPE: Identify each line-item that is associated with a segment of work.
7. DOLLAR VALUE: As described in the Schedule of Bid Values.
8. Activity: As described in the Schedule of Bid Values and the following;
   a. Expand to include entities, which is responsible for performing the work of each activity, identified as, but not limited to, General Contractor, and Sub-Contractor, second and tertiary tier Sub-Contractors, Manufacturers, Fabricators and Vendors.
   b. Expand to include separate activity line-items for cost items that are directly related to Division 01 - GENERAL REQUIREMENTS and are direct cost of actual work-in-place. Such items shall be, but not limited to, the following;
      1) Submittals,
      2) Field Engineering
      3) Operation and Maintenance Manuals.
      4) Demonstration and Training.
9. Sub-Schedules:
   a. Major Scope of Work: Provide Sub-Schedules for line-items that are associated with each designated major scope of work as identified in Bid Proposal, and defined in Specification Section – SUMMARY OF WORK and **Specification Section – ALTERNATES**, that requires itemization of each line-item value.
   b. Scope Type: Provide Sub-Schedules for line-items that are associated with each specific scope type.
      1) Building Costs: Detailed cost breakdown of all cost items that are directly related to the Project per Building.
         a) When the Project Building(s) is of sufficient size to warrant, break the building costs down into areas of work compatible with the Contractor's Means and Methods for construction sequences.
         b) Building areas may consist of floor and roof levels and partial floor and roof levels.
      2) Project Site Costs: Detailed cost breakdown of all cost items that are directly related to the Project Site.
         a) When the Project Site is of sufficient size to warrant, break the site costs down into areas of work compatible with the Contractor's Means and Methods for construction sequences.
10. Contract Conditions: As defined in the Schedule of Bid Values and the following;
   a. Expand to include separate activity line-items for cost items that are directly related to Division 01 - GENERAL REQUIREMENTS and are not direct cost of actual work-in-place. Such items shall be, but not limited to, the following;

1) Temporary Facilities.
2) Field Supervision.
3) Project Identification Sign.
4) Project Closeout Requirements.
a) Punch List Activities, and Project Record Documents.

b. Expand to include separate activity line-item for cost items that are directly related to Division 00 - CONDITIONS OF THE CONTRACT REQUIREMENTS and are not direct cost of actual work-in-place. Such items shall be, but not limited to, the following;
1) On-Site Facilities and Supervision.
2) General Contractor's Overhead and Profit.
3) Performance and Labor and Material Bonds.

11. Allowances: As defined in the Schedule of Bid Values.
12. Purchase Contracts: Provide separate line-item in the Schedule of Values for each Purchase Contract, showing the value of the Purchase Contract.
13. Contingencies: As defined in the Schedule of Bid Values.
14. Grand Total: As defined in the Schedule of Bid Values.

PART 3 - EXECUTION

3.1 APPLICATION AND CERTIFICATION FOR PAYMENT

A. General Requirements:
1. Coordination: Coordinate the preparation of the Application for Payment with the preparation of the **Complete Schedule of Values** and **Project Construction Schedule**.
a. Entries shall match data on the **Complete Schedule of Values** and **Project Construction Schedule** and **Project Schedule Updates**, if revisions were made.
2. Application and Certification for Payment Forms: Use forms accepted by the Architect and Owner for Applications for Payment.
a. Form shall be based on AIA Document G702 Application and Certification for Payment and AIA Document G703 Continuation Sheets.
b. Submit form for acceptance with initial submittal of **Complete Schedule of Values**.
3. Application Preparation: Complete every entry on form. Notarize and execute by a person authorized to sign legal documents on behalf of the Contractor. Project Inspector or Architect will return incomplete applications without action.
a. Use signed and notarized original copies of each Application for Payment to Architect by a method ensuring receipt. One copy shall include Waivers of Lien and similar attachments if required.
4. Identification: Include the following Project Identification on all Application for Payment:
a. Project Name and Location.
b. Owner Name.
c. Architect's Project Number.
d. Contractor Name and Address.
e. Application Number.
f. Application Date.
g. Period To:

B. Format.
   1. Provide a comprehensive, fully developed, detailed Application for Payment with Continuation Sheets in tabular form.
      a. Provide and identify the following separate columns to indicate the following for each item listed;
         1) ACTIVITY CODE.
         2) DESCRIPTION.
         3) SCHEDULED DOLLAR VALUE.
         4) WORK COMPLETED.
            a) FROM PREVIOUS APPLICATION.
            b) THIS PERIOD.
         5) TOTAL COMPLETED.
         6) PERCENTAGE OF COMPLETION.
         7) BALANCE TO FINISH.
         8) RETAINAGE.
      b. Provide and identify separate line-items to indicate the following the following;
         1) Activity.
         2) Sub-Schedules.
         3) Contract Conditions.
         4) Allowance(s).
         5) Purchase Contracts (if applicable).
         6) Contingency (ies).
         7) Grand Totals.
         8) Change Orders.

C. Content:
   1. ACTIVITY CODE: Provide the Activity Identification Code for each line-item of Work as indicated as separate activities in the **Project Construction Schedule**
   2. DESCRIPTION OF WORK: Provide the same description as indicated in the Schedule of Values for each line item.
   3. SCHEDULED DOLLAR VALUE: Provide the same amount as indicated in the Schedule of Values for each line item.
   4. WORK COMPLETED: with the following sub-columns.
      a. FROM PREVIOUS APPLICATION, include Dollar Value for work completed in previous Application for Payment, whether or not payment has been received.
      b. THIS PERIOD, include only the Dollar Value for work completed at the time of Application for Payment.
   5. TOTAL COMPLETED: The sum Dollar Value of Work Completed and Materials Presently Stored.
   6. PERCENTAGE OF COMPLETION: The percentage value of the total Work Completed and the Stored to Date divided by the Scheduled Value.
   7. BALANCE TO FINISH: The dollar value of the Scheduled Value minus the Total Completed.
   8. RETAINAGE: The dollar value of the percentage of retention per contract agreement.
   9. Activity:
      a. Use the Complete Schedule of Values and Baseline Project Schedule as a guide to establish activity line-items for the Application for Payment.
      b. Include separate activity line-items when a work activity is separated into stages and requires separate payments for each stage.

c. Provide separate line-items for each part of the Work where separate payments will be requested including, but not limited to, submittals, materials, equipment, fabrication and installation.
d. Provide separate line items for materials stored but not yet installed, where separate payments will be requested.

10. Sub-Schedules: As described in the Complete Schedule of Values.
11. Contract Conditions: As described in the Complete Schedule of Values.
12. Allowances: As described in the Complete Schedule of Values.
13. Purchase Contracts: As described in the Complete Schedule of Values
    a. Indicate Owner payments or deposits, if any, and balance to be paid by the Contractor
14. Contingencies: As described in the Complete Schedule of Values.
15. Grand Totals: As described in the Complete Schedule of Values.
16. Change Orders:
    a. Include amounts of approved Change Orders or Construction Change Directives issued before the last day of construction period covered by application.

D. Supplemental Information:
1. Materials Stored: Include in Application for Payment the amounts applied for materials or equipment purchased or fabricated and stored, but not yet installed.
    a. Differentiate between items stored on-site and items stored off-site.
    b. Provide certificate of insurance or Bonded Warehousing, evidence of transfer of title to Owner, and consent of surety to payment, for stored materials.
    c. Provide supporting documentation that verifies amount requested, such as paid invoices. Match amount requested with amounts indicated on documentation; do not include overhead and profit on stored materials.
    d. Provide summary documentation for stored materials indicating the following:
        1) Materials previously stored and included in previous Applications for Payment.
        2) Work completed for this Application utilizing previously stored materials.
        3) Additional materials stored with this Application.
        4) Total materials remaining stored, including materials with this Application.
2. Waivers of Mechanic's Lien: With each Application for Payment, submit Waivers of Mechanic's Liens from subcontractors, sub-subcontractors, and suppliers for construction period covered by the previous application.
    a. Submit partial waivers on each item for amount requested in previous application, after deduction for retainage, on each item.
    b. When an Application shows completion of an item, submit conditional final or full waivers.
    c. Owner reserves the right to designate which entities involved in the Work must submit waivers.
    d. Submit final Application for Payment with or preceded by conditional final waivers from every entity involved with performance of the Work covered by the application who is lawfully entitled to a lien.
    e. Waiver Forms: Submit waivers of lien on forms executed in a manner acceptable to Owner.

E. Initial Application for Payment: Administrative actions and submittals that must precede or coincide with submittal of first Application for payment include the following:
1. List of Subcontractors.
2. Schedule of Values.
3. Contractor's Construction Schedule (preliminary if not final).

4. Products List (preliminary if not final).
5. Submittal Schedule (preliminary if not final).
6. List of Contractor's Staff Assignments.
7. List of Contractor's Principal Consultants.
8. Copies of authorizations and licenses from authorities having jurisdiction for performance of the Work.
9. Initial Progress Report.
10. Report of Preconstruction Conference.

F. Application for Payment for Progress of Work:
1. Each Application for Payment shall be consistent with previous applications and payments as certified by the Project Inspector, Architect, and paid for by the Owner.
2. Payment Applications shall be submitted to the Architect by the date established by the Owner. The maximum period of time covered by each Application for Payment is for one month.
3. Payments Applications shall be updated to reflect any revised activity in the Project Schedule Updates.

G. Application for Payment at Substantial Completion: After the issuing of the Certificate of Substantial Completion, submit an Application for Payment showing 100 percent completion for portions of the Work claimed as substantially complete.
1. Include documentation supporting the claim that the Work is substantially complete and a statement showing an accounting of changes to the Contract Sum.
2. This application shall reflect Certificates of Partial Substantial Completion issued previously for Owner occupancy of designated portions of the Work.

H. Final Application for Payment: Submit Final Application for Payment with releases and supporting documentation not previously submitted and accepted, including, but not limited, to the following:
1. Evidence of completion of Project closeout requirements.
2. Insurance certificates for products and completed operations where required and proof that taxes, fees, and similar obligations were paid.
3. Updated final statement accounting for final changes to the Contract Sum.
4. "Contractor's Affidavit of Payment of Debts and Claims".
5. "Contractor's Affidavit of Release of Liens".
6. "Consent of Surety to Final Payment".
7. Evidence that claims have been settled.
8. Final meter readings for utilities, a measured record of stored fuel, and similar data as of date of Substantial Completion or when Owner took possession of and assumed responsibility for corresponding elements of the Work.
9. Final liquidated damages settlement statement.

END OF SECTION

SECTION 013216 -- CONSTRUCTION SCHEDULES

Refer to FUSD General Conditions and General Requirements, 01 32 00 Construction Progress Documentation, 01 32 16.01 Progress Schedule.

END OF SECTION

SECTION 013226 -- FORMS AND REPORTS

PART 1 - GENERAL

1.1 SUMMARY

A. This Section includes the following:
   1. Contractor to provide all Forms and Reports as required by the Architect for Administrative Procedures and other related items necessary to document the Project as required by the Contract Documents, including but not limited to those forms provided under this specification section.

B. Related Sections: The following Project Manual Sections contain requirements that relate to this section:
   1. ALL DIVISION 00 SPECIFICATION SECTIONS.
   2. ALL DIVISION 01 SPECIFICATION SECTIONS.
   3. ALL SPECIFICATION SECTIONS IN THE FACILITY CONSTRUCTION SUBGROUP.
   4. ALL SPECIFICATION SECTIONS IN THE FACILITY SERVICES SUBGROUP.
   5. ALL SPECIFICATION SECTIONS IN THE SITE AND INFRASTRUCTURE SUBGROUP.

1.2 SUBMITTALS

A. Submit in accordance with Specification Section - SUBMITTAL PROCEDURES:
   1. Forms and Reports as attached to this section when required by the Architect.

1.3 QUALITY ASSURANCE

A. Regulatory Requirements:
   1. In accordance with Specification Section - REGULATORY REQUIREMENTS.

PART 2 - PRODUCTS

NOT APPLICABLE

PART 3 - EXECUTION

3.1 SCHEDULES

A. Listing of Architect required Forms and Reports No. of Pages:
   1. 01 32 26.01-DAILY SUPERINTENDENT'S REPORT 2
   2. 01 32 26.02-SUBCONTRACTOR'S DAILY REPORT 1
   3. 01 32 26.03-SHOP DRAWING AND SUBMITTAL TRANSMITTAL 1
   4. 01 32 26.04-REQUEST FOR INFORMATION (RFI) 1
   5. 01 32 26.05-SUPPLEMENTAL INSTRUCTIONS (SI) 1

6. 01 32 26.06-REQUEST FOR PROPOSAL (RFP) 1
7. 01 32 26.07-CONSTRUCTION CHANGE DIRECTIVE (CCD) 1
8. 01 32 26.08-CHANGE ORDER REQUEST REVIEW (COR) 2
   a. (Review form provided by the Contractor is subject to review and comments by the Owner and Architect).
9. 01 32 26.09-CHANGE ORDER (CO) 1
10. 01 32 26.10-FRAGNET SUBMITTAL FORM 1
11. 01 32 26.11-APPLICATION FOR PAYMENT (AP) 1
12. 01 32 26.12-CONTRACTOR'S TESTING / INSPECTION REQUEST FORM 1
13. 01 32 26.13-CONTRACTOR'S "DEVIATION NOTICE" INSPECTION REPORT FORM 1
14. 01 32 26.14-CONTRACTOR'S FINAL INSPECTION REQUEST FORM 1
15. 01 32 26.15-CONTRACTOR'S PUNCHLIST INSPECTION REQUEST FORM 1
16. 01 32 26.16-CONTRACTOR'S PUNCHLIST 1
17. Periodic field reports issued by the Architect and Engineers.
18. Contractor's Punch List Response and Correction form is required for each Punch List Review report, citing the issuing Punch List Review format number(s).
19. Completed Contractor's Punch List and Final Inspection Reports issued by the Architect, Engineers and the Owner.
20. See the attached Forms and Reports suitable for reproduction by the Contractor or Subcontractor.

END OF SECTION

(Attachments)

GENERAL CONTRACTOR'S
DAILY SUPERINTENDENT'S REPORT

(JOB NO./REPORT NO.) _____ (DATE/DAY) _____

(JOB NAME) _____ WEATHER DESCRIPTION _____

(WORK SHIFT) / FROM / TO _____ (PROJECT MANAGER/SUPERINTENDENT) _____

PM/	ENGR/	CARPENTERS			LABORERS		CEM FINISHERS			OPER ENGR			
SUPT	TK	FMAN	JRMAN	APP	FMAN	LAB	FMAN	JRMAN	APP	JRMAN	APP	OTHER	TOTAL

CONCRETE: CY TODAY:_____ LOCATION: _____ CY TO DATE: _____

WORK SUMMARY:

DELAYS / WORK RELEASED BY OWNER:

CHANGE ORDERS / EXTRA WORK ORDERS:

INSTRUCTIONS FROM ARCHITECT / OWNER:

MATERIALS / EQUIP. DELIVERED TO JOB:

INSPECTIONS / TESTS PERFORMED

SAFETY / ACCIDENTS:

MAJOR EQUIP. ON SITE:

BACKSIDE OF GENERAL CONTRACTOR'S REPORT

SUBCONTRACTORS ON JOB	NO. OF MEN	FOREMAN'S NAME	WORK DESCRIPTION / LOCATION

MAJOR EQUIPMENT ON SITE:

BACK CHARGES:

REMARKS:

SUBCONTRACTOR'S DAILY REPORT

PROJECT: DATE:

SHIFT TIME FOREMAN: WEATHER:

WORK DESCRIPTION AND LOCATION:

SUB-SUBCONTRACTOR	CREW SIZE	CRAFT	WORK DESCRIPTION / LOCATION

DELAYS:

CHANGE ORDERS / EXTRA WORK ORDERS:

INSTRUCTIONS RECEIVED FROM GC:

TESTS / INSPECTIONS PERFORMED:

MATERAL / EQUIPMENT DELIVERIES:

MAJOR EQUIPMENT ON SITE:

SAFETY / ACCIDENTS:

SHOP DRAWING AND SUBMITTAL TRANSMITTAL

DESCRIPTION:

SUBMITTAL NO.:

SPEC SECTION:

ARCHITECT:
Darden Architects, Inc.
6790 North West Avenue
Fresno, California 93711

PROJECT:

CONTRACTOR:

SUPPLIER:

Substitution: Yes: ☐ **DSA Approval Req'd**

DATE RECEIVED: _____ **NO. RECEIVED:** _____ **DATE RETURNED:** _____

Contractor Remarks:

Other Required Information: CPM Activity / Submittal Task No.: _____

Early Start (ES) Date: _____ Late Finish (LF) Date: _____

WARRANTY: ☐ **O and M MANUALS** ☐ Early Finish (EF) Date: _____ Scheduled Float Time: _____

DESIGN CONSULTANT'S REVIEW:

TRANSMITTED BY ARCHITECT TO: _____ DATE RETURNED: _____
DATE SENT: _____
NO. SENT: _____

Consultants Remarks:

ACTION:

☐ NO EXCEPTION TAKEN RELATIVE TO DESIGN
☐ NO EXCEPTION TAKEN WITH MODIFICATION NOTED
☐ AMEND AS NOTED AND RESUBMIT
☐ REJECTED AND RESUBMIT
☐ SEE ATTACHED LETTER

ARCHITECT'S REVIEW:

Architects Remarks:

ACTION:

☐ NO EXCEPTION TAKEN RELATIVE TO DESIGN
☐ NO EXCEPTION TAKEN WITH MODIFICATION NOTED
☐ AMEND AS NOTED AND RESUBMIT
☐ REJECTED AND RESUBMIT

Approved Substitution ☐

COPIES TO:

DATE RETURNED: _____

Contractor: **Owner:** **Inspector:** **File:** **Other:**

REQUEST FOR INFORMATION

RFI No.:

To: **Darden Architects, Inc.**
6790 North West Avenue
Fresno, California 93711

Date:

Respond By:

Architect Project No.

Attn:

Project:

INFORMATION REQUESTED:

test

Cost Impact: None: _____ Signature: _____

Schedule Impact: None: _____ Days Pages Attached: _____

Trade/Contractor: Schedule Task No/Item:

The Work shall be carried out in accordance with the following supplemental instructions issued in accordance with the Contract Documents without change in the Contract Sum or Contract Time. Proceeding with the Work in accordance with these instructions indicates your acknowledgement that there will be no change in the Contract Sum or Contract Time.

If the Contractor considers that this supplemental instruction requires a change in the Contract Sum or Contract Time, the Contractor shall not proceed with this Work and shall promptly submit an itemized proposal to the Architect for doing this work. If your proposal is found to be satisfactory and in order, this supplemental instruction will be superseded by a Construction Change Directive.

Refered To: Refered Date: Return Date:

SUPPLEMENTAL INSTRUCTIONS:

Consultant's Signature: _____ Architect's Signature: _____

Date: _____ Date _____

Copy: ☐ Owner ☐ Inspector ☐ Testing Lab ☐ Structural ☐ Mech. ☐ Elec ☐ File ☐ Other Pages Attached: _____

SUPPLEMENTAL INSTRUCTIONS

PROJECT:

SUPPL. INST. NO.:

DATE OF ISSUANCE:

OWNER:

CONTRACT DATE:

NOTICE TO PROCEED:

CONTRACTOR:

Architect Project No.:
DSA Appl. No.:
DSA File No.:
OPSC Appl. No.:
OSHPD No.:

The Work shall be carried out in accordance with the following supplemental instructions issued in accordance with the Contract Documents without change in the Contract Sum or Contract Time. Proceeding with the Work in accordance with these instructions indicates your acknowledgement that there will be no change in the Contract Sum or Contract Time.

If the Contractor considers that this supplemental instruction requires a change in the Contract Sum or Contract Time, the Contractor shall not proceed with this Work and shall promptly submit an itemized proposal to the Architect for doing this work. If your proposal is found to be satisfactory and in order, this supplemental instruction will be superceded by a Construction Change Directive.

Description:

Trade/Contractor:

Schedule Task No/Item:

Attachments:

Darden Architects, Inc.

Issued By:

Architect

☐ OWNER ☐ CONTRACTOR ☐ INSPECTOR ☐ TESTING LAB ☐ STRUCTURAL ☐ MECHANICAL ☐ ELECTRICAL ☐ OTHER

REQUEST FOR PROPOSAL

PROJECT:

REQUEST FOR PROPOSAL NO.:

DATE OF ISSUANCE:

OWNER:

CONTRACT DATE:

NOTICE TO PROCEED:

CONTRACTOR:

Architect Project No.:
DSA Appl. No.:
DSA File No.:
OPSC Appl. No.:
OSHPD No.:

Please submit an itemized proposal for change in the Contract Sum and Contract Time for proposed modifications to the Contract Documents described herein. Submit proposal promptly or notify the Architect in writing of the date on which you anticipate submitting your proposal.

This is not a Change Order, Construction Change Directive, or a direction to proceed with the Work described in the proposed modifications.

Description:

Attachments

Darden Architects, Inc.

ISSUED BY:

_____

Architect

☐ OWNER ☐ CONTRACTOR ☐ ARCHITECT ☐ CONSULTANT ☐ INSPECTOR ☐ OTHER

CONSTRUCTION CHANGE DIRECTIVE

PROJECT:

DIRECTIVE NO.:

DATE OF ISSUANCE:

OWNER:

CONTRACT DATE:

NOTICE TO PROCEED:

CONTRACTOR:

Architect Project No.:
DSA Appl. No.:
DSA File No.:
OPSC Appl. No.:
OSHPD No.:

You are hereby directed to make the following change(s) in this Contract:

CONTRACT ADJUSTMENT

1. The proposed basis of adjustment to the Contract Sum of Guaranteed Maximum Price is:

   ☐ Lump Sum $0.00

   ☐ Unit Price of $0.00

   ☐ As provided for in General Conditions and the Supplemental Conditions of the contract.

   ☐ As Follows:

2. The Contract Time is proposed to (be adjusted). The proposed adjustment, if any, is increase of _____ days)

When signed by the Qwner and Architect and received by the Contractor, this document becomes effective IMMEDIATELY as a Construction Change Directive (CCD), and the Contractor shall proceed with the change(s) described above.

Signature by the Contractor indicates the Contractor's agreement with the proposed adjustments in Contract Sum and Contract Time set forth in this Construction Change Directive.

ARCHITECT	OWNER	CONTRACTOR
Darden Architects, Inc.		
6790 North West Avenue		
Fresno, California 93711		
By:	By:	By:
Date:	Date:	Date:

☐ OWNER ☐ CONTRACTOR ☐ ARCHITECT ☐ CONSULTANT ☐ INSPECTOR ☐ OTHER

darden architects

6790 North West Avenue
Fresno, California 93711
Tel: 559.448.8051
Fax: 559.446.1765
www.dardenarchitects.com

CHANGE ORDER REQUEST REVIEW

PROJECT:

CHANGE ORDER REQUEST NO.:

DATE OF ISSUANCE:

OWNER:

CONTRACTOR:

Architect Project No.:
DSA Appl. No.:
DSA File No.:
OPSC Appl. No.:
OSHPD No.:

DESCRIPTION OF PROPOSED CHANGE:

Scope:

Necessary for:

DESIGN CONSULTANT'S REVIEW:

Date Sent:
Referred To:
Date Returned:

ACTION:

☐ NO EXCEPTION TAKEN RELATIVE TO COST
☐ NO EXCEPTION TAKEN RELATIVE TO TIME
☐ AMEND AS NOTED AND RESUBMIT
☐ REJECTED

Consultants Remarks:

ARCHITECT'S REVIEW:

Date Returned:

ACTION:

☐ NO EXCEPTION TAKEN RELATIVE TO COST
☐ NO EXCEPTION TAKEN RELATIVE TO TIME
☐ AMEND AS NOTED AND RESUBMIT
☐ REJECTED

Architects Remarks:

Attachments:

REVIEWED:

Darden Architects, Inc.
6790 North West Avenue
Fresno, California 93711

APPROVED:

Architect : **Date :** **Owner :** **Date :**

The Architect is hereby directed to instruct the Contractor to make the above changes in the Project and to include these changes in a subsequent Change Order:

☐ OWNER ☐ CONTRACTOR ☐ INSPECTOR ☐ STRUCTURAL ☐ MECHANICAL ☐ ELECTRICAL ☐ OTHER

CHANGE ORDER REQUEST NO.

Architect Project No.:

CHANGE ORDER REQUEST - BREAKDOWN WORKSHEET

WORK DELETED:

Contractor				
Materials	$0.00			
Equipment	$0.00			
Labor	$0.00			
Material, Equipment, & Labor		$0.00		
TOTAL:				**$0**

ADDITIONAL WORK PERFORMED BY SUB-CONTRACTOR

Sub-Contrator				
Materials	$0.00			
Equipment	$0.00			
Labor	$0.00			
Material, Equipment, & Labor		$0.00		
Overhead 01 32 26.03		$0.00		
Profit 01 32 26.03		$0.00		
Sub-Total:			$0.00	
Contractor				
Overhead 01 32 26.03			$0.00	
Profit 01 32 26.03			$0.00	
TOTAL:				**$0.00**

ADDITIONAL WORK PERFORMED BY CONTRACTOR

Contractor				
Materials	$0.00			
Equipment	$0.00			
Labor	$0.00			
Material, Equipment, & Labor		$0.00		
Overhead 01 32 26.03		$0.00		
Profit 01 32 26.03		$0.00		
TOTAL:				**$0.00**

TOTAL COST: **$0.00**

TOTAL COST: **$0.00**

TOTAL DAYS: **0**

ARCHITECTURAL ADMINISTRATIVE FEES:

Proposal Request Administration	**$0.00**
Construction Administration	**$0.00**
TOTAL:	**$0.00**
DSA Fees:	**$0.00**

CHANGE ORDER

PROJECT:

OWNER:

CONTRACTOR:

CHANGE ORDER NO.:

DATE OF ISSUANCE:

CONTRACT DATE:

NOTICE TO PROCEED:

Architect Project No.:
DSA Appl. No.:
DSA File No.:
OPSC Appl. No.:
OSHPD No.:

The Contract is changed as follows:

Description:

See Attached pages for Change Order Items

It is mutually agreed that the affixed signature to this Change Order is evidence that all compensation with respects to the changes defined herein have been satisfied with the execution of this document. Furthermore, no additional compensation either monetarily or via time extension to this contract will be sought in respect to this Change Order.

The Original Contract Sum and Contract Completion Date:		
Net change (Contract Sum and Contract Time) by previous Change Orders:		
Contract Sum and Contract Completion Date prior to this Change Order:		
Contract Sum and Contract Time (increased or decreased) by this Change Order:		
New Contract Sum and Contract Completion Date including this Change Order:		

ARCHITECT	OWNER	CONTRACTOR
Darden Architects, Inc.		
6790 North West Avenue		
Fresno, California 93711		
By:	By:	By:
Date:	Date:	Date:

☐ OWNER ☐ CONTRACTOR ☐ ARCHITECT ☐ CONSULTANT ☐ INSPECTOR ☐ OTHER

FRAGNET SUBMITTAL FORM

Date: _____ Sheet _____ of _____

From: _____ Fragnet No.: _____

To: Darden Architects, Inc.

Description of Delay: By reference to attached schedule fragnet, the following delay occurred:

_____

_____

_____

Continued on Sheets _____ of _____

Time Extension Requested: _____ wds, _____ cds.

Time Requested for Activity: Time Requested for Project:

Related Documents: The following construction documents provide evidence of the delay event:

RFI Nos.: _____ SI Nos.: _____

CCD Nos: _____ RFP Nos.: _____

Daily Reports Dated: _____ and attached.

Project Correspondence Dated: _____ and attached.

Other Documentation: _____

Schedule-Related Information: By reference to the attached fragnet, provide the following:

Predecessor Activity to Fragnet:

Successor Activity to Fragnet:

Affected CPM Schedule Activities (list IDs and descriptions):

_____

_____

New CPM Schedule Activities (list IDs and descriptions):

_____

_____

END OF FORM

APPLICATION FOR PAYMENT

To:
DARDEN ARCHITECTS, INC.
6790 N. West Avenue
Fresno, CA 93711

Project: _____

Bid Package No: _____

Pay Application No: _____

Application Date: _____

Period Ending: _____

Distribution to: _____
Owner: _____
Architect: _____
Contractor: _____
Const Mgr.: _____
Inspector: _____

FROM: _____
Prime Contractor

Address: _____ Phone: _____

CONTRACTOR'S APPLICATION FOR PAYMENT:

CHANGE ORDER SUMMARY		
APPROVED CHANGE ORDERS:		
Change Order No.	Approved Date.	Amount:
		$
		$
		$
		$
		$
		$
		$
		$
TOTALS		
Net change by Change Order		$

The undersigned Contractor certifies that in the best of his knowledge, information, and belief the Work covered by this Application for Payment has been completed in accordance with the Contract Documents, that all amounts have been paid by the contractor for work for which previous Certificates for Payment were issuesd and payment received from the Owner and that current payment show herein is now due.

Contractor:

_____ **DATE:** _____

The present status of the account for this Contract is as follows:

ORIGINAL CONTRACT SUM:..... $ _____

Net Change by Change Orders:..... $ _____

CONTRACT SUM TO DATE:..... $ _____

TOTAL COMPLETE & STORED TO DATE:..... $ _____

RETAINAGE:_____%:..... $ _____

TOTAL EARNED LESS RETAINAGE:..... $ _____

LESS STOP NOTICE(S):..... $ _____

LESS PREVIOUS PAYMENT:..... $ _____

CURRENT PAYMENT DUE:..... $ _____

This Certificate is not negotiable. This AMOUNT CERTIFIED is payable only to the Contractor named herein, issuance, payment and acceptance of payment, are without prejudice to any rights of the Owner or Contractor under this contract.

CONTRACTOR:

_____ **DATE:** _____

INSPECTOR:

_____ **DATE:** _____

CONSTRUCTION MANAGER:

_____ **DATE:** _____

ARCHITECT:

_____ **DATE:** _____

CONTRACTOR'S TESTING / INSPECTION REQUEST FORM

PROJECT: _____

DATE RECEIVED: _____ (by Inspector)

TIME RECEIVED: _____ (by Inspector)

BUILDING: _____

SITE/OFFSITE: _____

CONSTRUCTION PHASE (1, 2, 3, etc.): _____

SPECIFICATION SECTION (No.): _____

PLAN SHEET AND DETAIL: _____

SCOPE OF WORK: _____

(concrete, electrical, etc.)

INSPECTION REQUESTED BY: _____

(contractor name)

LOCATION (bldg., room, floor, wall, ceiling, etc.) _____

_____

_____

TYPE OF INSPECTION (concrete, framing, welding, masonry, electrical, etc.) _____

_____

_____

INSPECTION REQUESTED ON: _____ at _____ am/pm

(date) (time)

Note 1: A Minimum Notice of 48 hours is Required to be Received by the Inspection Officer Prior to the Time the Testing / Inspection is Requested to Begin.

_____

PRINT NAME AND TITLE OF PERSON REQUESTING INSPECTION

_____

SIGNATURE OF PERSON REQUESTING INSPECTION

Note 2: Contractor Must Accompany Inspector on Inspection, if Requested.

PASSED: _____ FAILED: _____

Note 3: See Attached Sheet for Explanation if Inspection Failed. Re-inspection Required.

INSPECTOR SIGNATURE: _____ Date: _____

CONTRACTOR'S "DEVIATION NOTICE" INSPECTION REQUEST FORM

PROJECT: _____

DATE RECEIVED: _____ (by Inspector)
TIME RECEIVED: _____ (by Inspector)

DEVIATION NOTICE(S) (No.): _____

BUILDING: _____
SITE/OFFSITE: _____
CONSTRUCTION PHASE (1, 2, 3, etc.): _____
SPECIFICATION SECTION (No.): _____
SCOPE OF WORK: _____
(concrete, electrical, etc.)

INSPECTION REQUESTED BY: _____
(contractor company name)

LOCATION(S) OF WORK FOR INSPECTION (be specific- bldg.(s), room(s), etc.)

_____

_____

INSPECTION REQUESTED ON: _____ at _____ am/pm
(date) (time)

Note 1: A Minimum Notice of 48 hours is Required to be Received by the Inspection Officer Prior to the Time the "Deviation Notice" Inspection is Requested to Begin.

_____
PRINT NAME OF PERSON REQUESTING DEVIATION NOTICE INSPECTION

_____
SIGNATURE OF PERSON REQUESTING DEVIATION NOTICE INSPECTION

Note 2: Contractor Must Accompany Project Inspector on "Deviation Notice" Inspection, if Requested.

Note 3: See Attached "Deviation Notice" for Inspector's Comments and/or Date Completed.

PASSED: _____ FAILED: _____

PROJECT INSPECTOR SIGNATURE: _____
DATE: _____

CONTRACTOR'S FINAL INSPECTION REQUEST FORM

PROJECT: _____

DATE RECEIVED: _____ (by Inspector)

TIME RECEIVED: _____ (by Inspector)

BUILDING: _____

SITE/OFFSITE: _____

CONSTRUCTION PHASE (1, 2, 3, etc.): _____

SPECIFICATION SECTION (No.): _____

SCOPE OF WORK: _____

(concrete, electrical, etc.)

INSPECTION REQUESTED BY: _____

(contractor company name)

INSPECTION REQUESTED ON: _____ at _____ am/pm

(date) (time)

Note 1: A Minimum Notice of 48 hours is Required to be Received by the Inspection Officer Prior to the Time the Final Inspection is Requested to Begin. Contractor to be Notified by the Construction Manager in Regards to the Actual Date and Time of the Final Inspection.

_____

PRINT NAME AND TITLE OF PERSON REQUESTING FINAL INSPECTION

_____

SIGNATURE OF PERSON REQUESTING FINAL INSPECTION

Note 2: Contractor Must Accompany Project Inspector, Architect and/or Engineer(s) on Final Inspection, if Requested.

PASSED: _____ FAILED: _____

Note 3: If the Final Inspection Fails Re-Inspection is Required. See Attached Sheet for Comment(s).

PROJECT INSPECTOR SIGNATURE: _____

DATE: _____

PROJECT ARCHITECT SIGNATURE: _____

DATE: _____

CONTRACTOR'S PUNCHLIST INSPECTION REQUEST FORM

PROJECT: _____

DATE RECEIVED: _____ (by Inspector)
TIME RECEIVED: _____ (by Inspector)

BUILDING: _____
SITE/OFFSITE: _____
CONSTRUCTION PHASE (1, 2, 3, etc.): _____
SPECIFICATION SECTION (No.): _____
SCOPE OF WORK: _____
(concrete, electrical, etc.)

INSPECTION REQUESTED BY: _____
(contractor company name)

LOCATION(S) OF WORK FOR INSPECTION: (be specific- bldg.(s), room(s), etc.)

_____

_____

DESCRIPTION OF WORK TO BE INSPECTED: (item number(s) from punchlist)

_____

_____

INSPECTION REQUESTED ON: _____ at _____ am/pm
(date) (time)

Note 1: A Minimum Notice of 48 hours is Required to be Received by the Inspection Officer Prior to the Time the Punchlist Inspection is Requested to Begin.

_____
PRINT NAME OF PERSON REQUESTING PUNCHLIST INSPECTION

_____
SIGNATURE OF PERSON REQUESTING PUNCHLIST INSPECTION

Note 2: Contractor Must Accompany Project Inspector on Punchlist Inspection, if Requested. Items Must Have Already Been Signed Off by Contractor.

Note 3: Attached Sheet for Contractor's Signoff and/or Inspector's Comments and/or Date Completed for the Specific Punchlist Items Noted Above.

Note 4: This Inspection is NOT A FINAL INSPECTION but Only an Acknowledgement That a Particular Item(s) is/are completed.

PROJECT: _____ - CONTRACTOR'S PUNCHLIST

CONTRACTOR NAME: _____ Page _____ of _____

ITEM NO.	DESCRIPTION	BUILDING & ROOM NO.	FLOOR	CEILING	WALLS				DATE OBSERVED	SIGNOFF/ COMMENTS
					N.	S.	E.	W.		

01.32.26.16.xls

SECTION 013300 -- SUBMITTAL PROCEDURES

PART 1 - GENERAL

1.1 SUMMARY

A. This Section includes the following:
   1. Provide all material, labor, equipment and services necessary to completely provide all required submittals and other related items necessary to complete the Project as indicated by the Contract Documents.

B. Related Sections: The following Project Manual Sections contain requirements that relate to this section:
   1. ALL DIVISION 00 SPECIFICATION SECTIONS.
   2. ALL DIVISION 01 SPECIFICATION SECTIONS.
      a. 01 33 23 Submittals and Samples (FUSD)
   3. ALL SPECIFICATION SECTIONS IN THE FACILITY CONSTRUCTION SUBGROUP.
   4. ALL SPECIFICATION SECTIONS IN THE FACILITY SERVICES SUBGROUP.
   5. ALL SPECIFICATION SECTIONS IN THE SITE AND INFRASTRUCTURE SUBGROUP.

1.2 SUBMITTALS

A. Request for Electronic Files:
   1. Submit in accordance with the following:
      a. Contractor's Usage Agreement for Electronic Files:
         1) See attachment.

B. Contractor's responsibilities:
   1. The Contractor shall check, verify, and be responsible for all field measurements.
   2. The Contractor shall submit a schedule indicating when the required shop drawings and submittals will be submitted to the Architect.
      a. Submit schedule within the amount of days as indicated in Specification Section - CONSTRUCTION SCHEDULES.
   3. Submit copies as scheduled below, checked and approved by the Contractor for all submittals required for the work of the various trades. Deliver submittals promptly to avoid delays in delivery of materials or execution of the work.
      a. The Contractor (or Subcontractor) shall mark-up the submittals as to project specifics. If the specifications contains a schedule prepared by the Architect (i.e. paint symbols such as DW-1, M-1, CB-1, etc., or tile symbols such as CT-1,CT-2, or IWA, IWB, IWC, etc.), then the submittal will also contain those designations. Submittals without project specifics will be returned to the Contractor as not being properly prepared.
      b. The Contractor shall stamp the Submittals utilizing any language requested by the Owner in the General Conditions and the following minimum language:

"This submittal has been reviewed by (Name of Contractor) and approved with respect to the means, methods, techniques, sequences, and procedures of construction, and safety precautions and programs

incidental thereto. The Contractor has reviewed and approved not only the field dimensions, but the construction criteria, and has also made written notation regarding any information in the Shop Drawings that does not conform to the Contract Documents. The Contractor has reviewed this submittal and coordinated with all other Shop Drawings received to date by the Contractor and this duty of coordination has not been delegated to subcontractors, material suppliers, the Architect, or the design consultants on this project. The Contractor shall also have indicated that it has not relied upon the dimensions shown on the drawings, specifications and schedules, and that the Contractor has double-checked all dimensions for accuracy and fit. (Name of Contractor) also warrants that this submittal complies with the Contract Documents and comprises no variation thereto."

By: _____ Contractor's Signature

_____ Contractor's Typed Name

Date: _____

c. Substitutions on shop drawings or in product submittals will not be considered without prior approval in accordance with Specification Section - SUBSTITUTION PROCEDURES. Submittals containing unacceptable items will be rejected.

d. The Contractor shall make any corrections required by the Architect during the Architect's initial review, and re-submit the required corrected copies for final review and distribution.

C. Architect's responsibilities:

1. The Architect will make any desired corrections with reasonable promptness, and return the submittal to the Contractor.
2. The Architect's review of such drawings or schedules shall not relieve the Contractor of responsibility for deviations from the drawings or specifications, unless he has, in writing, called the Architect's attention to such deviations at the time of submission, and secured written acceptance.
   a. The Architect's review shall be for general conformance with the design concept for the project and general compliance with the information given in the Contract Documents.
   b. The Architect's review shall not be construed as an "approval", or to relieve the Contractor(s) and material suppliers of responsibility for errors or omissions in the submitted documents.
   c. Modifications or comments made on the submittals or shop drawings during this review do not relieve the Contractor from compliance with the requirements of the drawings and specifications.
   d. Acceptance of a specific item does not include acceptance of the assembly of which the item is a component.

D. The following list of items, definitions and required quantities is a minimum required for this project. Verify with FACILITY SERVICES SUBGROUP sections for additional quantities required within those divisions.

1. Product Data: Illustrations, standard schedules, performance charts, instructions, brochures, diagrams, other product information, color choices and/or manufacturer's catalog sheets shall be specially prepared for the Project (marked-up with project specifics) and shall be submitted in sequential sets for each category of work:
   a. Quantity:
      1) Unless otherwise indicated in the Contract Documents, provide Six (6) sets.
   b. Material Safety Data Sheets (MSDS): MSDS are not required, but it is recognized that applicable federal and state laws require the submission of these data sheets to an Owner. MSDS shall be turned over to the Owner (without review by the Architect or it's consultants) in compliance with federal and state laws.

2. Shop Drawings: Newly prepared information, drawn to accurate scale, consisting of drawings, diagrams, schedules, and other data specifically prepared for the Project by the Contractor, a Subcontractor, manufacturer, supplier or distributor to illustrate some portion of the Project. Do not reproduce Contract Documents or copy Standard information as the basis of Shop Drawings. Standard information prepared without specific reference to the Project is not considered Shop Drawings.
    a. Quantity: Provide One (1) reproducible original (vellum, sepia or mylar) and Three (3) opaque (blue-line or black-line xerographic) prints for each sheet or detail.
        1) The contractor shall receive the marked-up reproducibles and copy the required number of sets to the subcontractor, manufacturer's and/or material suppliers.
    b. Contractor's use of Architect's Electronic CAD Files.
        1) Upon written request by Contractor, copies of the Architect's electronic CAD files maybe available for Contractor's use in connection with this Project.
            a) Contractor's written request shall be on the Architect's "Contractor's Document Usage Agreement for Requested Documents" and may include an additional Architect's Consultant's Agreements, outlining conditions for providing files.
            b) Contractor's request shall be limited to drawings directly applicable to the Shop Drawings the Contractor wishes to create for submittal.
            c) Contractor shall pay the Architect for work incurred for providing the requested files. Payment shall be submitted with the request.
        2) The Architect's electronic CAD files are limited to files that already exist and that not all files maybe available at the Architect's and Architect's Consultant's discretion.
        3) The Architect's electronic CAD files are not part of the Contract Documents and have limitations to the accuracy, incorporating modifications, CAD system formats, CAD entity attributes and layering.
        4) The Architect's electronic CAD files have restrictions on Contractor's use, transmittal and delivery of files.
3. Samples: Physical examples specially prepared for the Project (marked-up with project specifics) which illustrate materials, equipment, or workmanship and establish standards by which the Work will be judged.
    a. Quantity:
        1) Unless otherwise indicated in the Contract Documents, provide Four (4) sets.
    b. Color samples shall be submitted on 8-1/2" x 11" cards for all colors scheduling paint types specified utilizing the paint symbols designated by the Architect in the drawings and specifications.
    c. Manufactured devices or equipment items:
        1) Quantity: One (1) sample, returned to supplier and which, when approved, may be incorporated into the Project.
4. Quality Assurance/Control submittals: Consists of design data, test reports, certificates, manufacturers instructions, and /or manufacturer's field reports.
    a. Quantity:
        1) Unless otherwise indicated in the Contract Documents, provide Six (6) sets.
5. Closeout submittals: Maintenance data, operating manuals, project documents, engineering calculations, and/or warranties shall be submitted when required in the various specification sections:

a. Quantity:
1) Unless otherwise indicated in the Contract Documents, provide Two (2) sets.

6. Field Samples: Sample panels of in place construction, or selected area of completed substrates or work showing the anticipated compliance with specified characteristics in order to establish a standard of quality.
a. Quantity:
1) See specific specification section requirements.

7. Mockups: Full-sized erected assemblies, used for coordination purposes or for testing in a laboratory, or required for approval in a finish form before the actual Project construction begins.
a. Quantity:
1) See specific specification section requirements.

E. Substitution, Dispute or Claim Submittals:
1. Any substitution, dispute or claim submittals relating to this contract, or any Contract breach, which are not disposed of by agreement shall be promptly submitted in accordance with the GENERAL CONDITIONS, as a claim to and decided by the Architect who shall issue a written decision on the dispute.
2. Adequate supporting data shall include, but is not limited; a statement of the reasons for the asserted entitlement, the certified payroll, invoice for material and equipment rental, and an itemized breakdown of any adjustment sought.
3. If no "SUBMISSION UNDER PENALTY OF PERJURY" clause is provided within the GENERAL CONDITIONS, then the Contractor shall certify, at the time of submission of a substitution, dispute or claim, as follows:

(The rest of this page is left intentionally blank)

SUBMISSION UNDER PENALTY OF PERJURY

I _____, being the _____(Must be an officer), declare under penalty of perjury under the laws of the State of California, and do personally certify and attest that: I have thoroughly reviewed the attached substitution, dispute or claim for additional compensation and/or extension of time, and know its contents, and said claim is made in good faith; the supporting data is truthful and accurate; that the amount required accurately reflects the contract adjustment for which the Contractor believes the Owner is liable; and further, that I am familiar with California Government Code Section 12650, et seq, pertaining to false claims, and further know and understand that submission of certification of a false claim may lead to fines, imprisonment and/or other severe legal consequences.

By: _____Contractor's Signature

_____Contractor's Typed Name

Date: _____

Submission of a substitution, dispute or claim, properly certified, with all required supporting documentation, and written rejection or denial or all or part of the claim by Owner, is a condition precedent to any action, proceeding, litigation, suit or demand for arbitration by Contractor.

(This page is left intentionally blank)

PART 2 - PRODUCTS

NOT APPLICABLE

PART 3 - EXECUTION

3.1 SCHEDULES

A. Usage Agreement For Electronic Documents:
1. Contractor's Usage Agreement for Electronic Files:
a. See attachment.

B. The following schedule was prepared to assist the Contractor in knowing the required submittals for this project, but may not be complete. Specific submittal information as to what is required is contained within the individual specification sections and those individual sections shall govern in the event of a question.

C. SUBMITTAL SCHEDULE
1. 01 25 00 - SUBSTITUTION PROCEDURES
a. SUBSTITUTION REQUEST FORMS
2. 01 29 73 - SCHEDULE OF VALUES
a. SCHEDULE OF VALUES
3. 01 32 16 - CONSTRUCTION SCHEDULES
a. CONSTRUCTION SCHEDULE, SHOP DRAWING SUBMITTAL SCHEDULE, CRITICAL PATH SCHEDULES, FRAGNETS.
4. 01 32 26 - FORMS AND REPORTS
a. AS REQUIRED BY THIS SPECIFICATION SECTION AND OTHER SPECIFICATION SECTIONS.
5. 01 33 00 - SUBMITTAL PROCEDURES
a. SHOP DRAWING AND SUBMITTAL SCHEDULE, COLOR SAMPLES OF ALL FINISH MATERIALS FOR COLOR BOARD SELECTION.
6. 01 45 29 - TESTING LABORATORY SERVICES
a. TESTING SCHEDULE, TEST REPORTS
7. 01 77 20 - PROJECT CLOSEOUT
a. ANOTATED CONTRACTOR’S AND ARCHITECT’S PUNCH LIST. ALL OPERATIONAL DATA, ALL MAINTENANCE MANUALS, ALL EXTRA MATERIALS.
8. 01 78 36 - WARRANTIES
a. ALL GUARANTEES AND WARRANTIES
9. 01 78 39 - PROJECT DOCUMENTS
a. PROJECT "AS-BUILT" DOCUMENTS, PROJECT "RECORD" DOCUMENTS AND PROJECT "CERTIFICATION" DOCUMENTS.
10. 03 11 01 - CONCRETE FORMWORK
a. PRODUCT DATA, SAMPLES, QUALITY ASSURANCE/CONTROL SUBMITTALS, CLOSEOUT SUBMITTALS.
11. 03 15 14 - DRILLED ANCHORS
a. PRODUCT DATA, ICC EVALUATION SERVICE REPORTS, DSA APPROVAL LETTERS.
12. 03 20 00 - REINFORCEMENT
a. SHOP DRAWINGS, QUALITY ASSURANCE/CONTROL SUBMITTALS, CLOSEOUT SUBMITTALS.
13. 03 30 00 - CAST-IN-PLACE CONCRETE

a. PRODUCT DATA, QUALITY ASSURANCE/CONTROL SUBMITTALS, CLOSEOUT SUBMITTALS.

14. 03 37 13 - SHOTCRETE
    a. PRODUCT DATA, QUALITY ASSURANCE/CONTROL SUBMITTALS, CLOSEOUT SUBMITTALS.
15. 04 23 00 - GLASS MASONRY UNITS
    a. SAMPLES, COLOR SAMPLES, PRODUCT DATA CERTIFICATION.
16. 05 30 00 - METAL DECK
    a. PRODUCT DATA, SHOP DRAWINGS, QUALITY ASSURANCE/CONTROL SUBMITTALS, CLOSEOUT SUBMITTALS.
17. 06 18 00 - GLUE-LAMINATED CONSTRUCTION
    a. SHOP DRAWINGS, VERIFIED REPORTS, AND WARRANTIES.
18. 06 22 00 - MILLWORK
    a. PRODUCT DATA, SHOP DRAWINGS, AND WARRANTIES.
19. 06 61 16 - SOLID SURFACING
    a. SHOP DRAWINGS, MANUFACTURER'S SPECIFICATIONS, COLOR SAMPLES, MOCK-UP, WI CERTIFICATION.
20. 07 26 13 - VAPOR-ALKALINITY CONTROL
    a. PRODUCT DATA, INSTALLATION INSTRUCTIONS, CLOSEOUT SUBMITTALS.
21. 07 21 00 - INSULATION
    a. PRODUCT DATA, INSTALLATION INSTRUCTIONS, CLOSEOUT SUBMITTALS.
22. 07 31 13 - SHINGLES
    a. PRODUCT DATA, SHOP DRAWINGS, SAMPLES, CLOSOUT SUBMITTALS.
23. 07 40 00 - METAL PANELS
    a. PRODUCT DATA, SHOP DRAWINGS, SAMPLES, CLOSOUT SUBMITTALS.
24. 07 51 13 - BUILT-UP ROOFING (Cold)
    a. PRODUCT DATA, SHOP DRAWINGS AND WARRANTIES.
25. 07 53 16 - ELASTOMERIC MEMBRANE ROOFING ("Dur-O-Last" CPA)
    a. PRODUCT DATA, SHOP DRAWINGS AND WARRANTIES.
26. 07 72 00 - ROOF ACCESSORIES
    a. PRODUCT DATA, SHOP DRAWINGS, SAMPLES AND WARRANTIES.
27. 07 81 16 - FIREPROOFING
    a. MATERIALS LIST, COLORS, MANUFACTURER'S DATA, TEST DATA AND SAMPLES.
28. 07 95 00 - EXPANSION JOINTS
    a. MATERIALS LIST, SHOP DRAWINGS, AND WARRANTIES.
29. 08 14 16 - WOOD DOORS
    a. PRODUCT DATA AND SHOP DRAWINGS.
30. 08 15 13 - LAMINATE-FACED WOOD DOORS
    a. PRODUCT DATA AND SHOP DRAWINGS.
31. 08 33 00 - COILING DOORS
    a. PRODUCT DATA, SHOP DRAWINGS AND WARRANTIES.
32. 08 80 00 - GLASS
    a. PRODUCT DATA, MATERIALS LIST, SAMPLES AND CERTIFICATES.
33. 08 91 00 - LOUVERS
    a. PRODUCT DATA, SHOP DRAWINGS, CERTIFICATES AND COLORS.
34. 09 24 00 - CEMENT PLASTER

a. PRODUCT DATA (INCLUDING INSTALLATION METHODS) AND MATERIALS LIST.

35. 09 26 13 - VENEER PLASTER
    a. PRODUCT DATA (INCLUDING INSTALLATION METHODS) AND MATERIALS LIST.
36. 09 30 13 - TILE
    a. PRODUCT DATA, COLORS, SAMPLES, CERTIFICATES, MAINTENANCE MATERIAL AND WARRANTIES.
37. 09 51 00 - ACOUSTICAL CEILINGS
    a. ACOUSTICAL TILE SAMPLES, SUSPENSION SYSTEM SAMPLES AND DSA APPROVED CEILING BRACING DRAWINGS.
38. 09 64 29 - HARDWOOD FLOOR
    a. PRODUCT DATA, SHOP DRAWINGS, QUALITY ASSURANCE/CONTROL SUBMITTALS, CLOSEOUT SUBMITTALS AND WARRANTIES.
39. 09 65 16 - RESILIENT SHEET
    a. PRODUCT DATA, SHOP DRAWINGS, QUALITY ASSURANCE/CONTROL SUBMITTALS, CLOSEOUT SUBMITTALS AND WARRANTIES.
40. 09 65 19 - RESILIENT TILE
    a. PRODUCT DATA, SHOP DRAWINGS, QUALITY ASSURANCE/CONTROL SUBMITTALS, CLOSEOUT SUBMITTALS AND WARRANTIES.
41. 09 68 40 - CARPET
    a. PRODUCT DATA, SHOP DRAWINGS, QUALITY ASSURANCE/CONTROL SUBMITTALS, CLOSEOUT SUBMITTALS AND WARRANTIES.
42. 09 69 00 - ACCESS FLOORING
    a. PRODUCT DATA, SHOP DRAWINGS, QUALITY ASSURANCE/CONTROL SUBMITTALS, CLOSEOUT SUBMITTALS AND WARRANTIES.
43. 09 91 00 - PAINTING
    a. PRODUCT DATA, MATERIALS LIST, COLORS, MAINTENANCE INFORMATION AND WARRANTIES.
44. 10 05 00 - MISCELLANEOUS SPECIALTIES
    a. PRODUCT DATA, COLORS AND SAMPLES (WHERE APPLICABLE) FOR ALL ITEMS.
45. 10 11 00 - VISUAL DISPLAY BOARDS
    a. PRODUCT DATA AND SAMPLE COLORS.
46. 10 13 00 - DIRECTORIES
    a. PRODUCT DATA, SHOP DRAWINGS, QUALITY ASSURANCE/CONTROL SUBMITTALS, CLOSEOUT SUBMITTALS AND WARRANTIES.
47. 10 14 53 - ROAD AND PARKING SIGNAGE
    a. PRODUCT DATA, SHOP DRAWINGS, QUALITY ASSURANCE/CONTROL SUBMITTALS, CLOSEOUT SUBMITTALS AND WARRANTIES.
48. 10 21 00 - TOILET PARTITIONS
    a. PRODUCT DATA, SHOP DRAWINGS, CERTIFICATES AND COLORS.
49. 10 26 00 - WALL AND CORNER GUARDS
    a. PRODUCT DATA, SHOP DRAWINGS, QUALITY ASSURANCE/CONTROL SUBMITTALS, CLOSEOUT SUBMITTALS AND WARRANTIES.
50. 10 44 00 - FIRE PROTECTION SPECIALTIES
    a. PRODUCT DATA, SHOP DRAWINGS, QUALITY ASSURANCE/CONTROL SUBMITTALS, CLOSEOUT SUBMITTALS AND WARRANTIES.
51. 10 51 13 - METAL LOCKERS

a. PRODUCT DATA, SHOP DRAWINGS, QUALITY ASSURANCE/CONTROL SUBMITTALS, CLOSEOUT SUBMITTALS AND WARRANTIES.

52. DIV. 22 - PLUMBING SECTIONS
    a. REFER TO APPROPRIATE SPECIFICATION SECTION REQUIREMENTS.
53. DIV. 23 -HEATING, VENTILATING AND AIR CONDITIONING SECTIONS
    a. REFER TO APPROPRIATE SPECIFICATION SECTION REQUIREMENTS.
54. DIV. 25- INTEGRATED AUTOMATION SECTIONS
    a. REFER TO APPROPRIATE SPECIFICATION SECTION REQUIREMENTS.
55. DIV. 26- ELECTRICAL SECTIONS
    a. REFER TO APPROPRIATE SPECIFICATION SECTION REQUIREMENTS.
56. DIV. 27 -COMMUNICATIONS SECTIONS
    a. REFER TO APPROPRIATE SPECIFICATION SECTION REQUIREMENTS.
57. DIV. 28- ELECTRONIC SAFETY AND SECURITY SECTIONS
    a. REFER TO APPROPRIATE SPECIFICATION SECTION REQUIREMENTS.
58. 31 20 00 - EARTHWORK
    a. PRODUCT DATA, SHOP DRAWINGS, QUALITY ASSURANCE/CONTROL SUBMITTALS, PROJECT RECORD DOCUMENTS, AND WARRANTIES, AND DRAWINGS SHOWING KNOWLEDGE OF THE EXTENT OF ENGINEERED PADS.
59. 32 12 00- PAVEMENT
    a. PRODUCT DATA, SHOP DRAWINGS, QUALITY ASSURANCE/CONTROL SUBMITTALS, PROJECT RECORD DOCUMENTS, AND WARRANTIES.
60. 33 40 00- STORM DRAINAGE
    a. PRODUCT DATA, SHOP DRAWINGS, QUALITY ASSURANCE/CONTROL SUBMITTALS, PROJECT RECORD DOCUMENTS, AND WARRANTIES.

CONTRACTOR'S
USAGE AGREEMENT FOR ELECTRONIC FILES -
ELECTRONIC FILE REQUEST FORM
Project Name: _____
DA Project No.:_____
TO: DARDEN ARCHITECTS, INC.
6790 N. West Avenue
Fresno CA 93711

D. I _____as a duly authorized agent of
, have a contract with the Owner to perform work on the above project in the following capacity:

___ Lease-Lease Back Agent
___ Construction Manager
___ General Contractor

E. We hereby submit for your consideration a request for Electronic Files on the behalf of
, and certify that they have a contract or subcontract to perform work on the above named project in the following capacity:

___ General Contractor
___ Sub-Contractor
___ Others under contract to a sub-contractor

F. I _____, certify the required attachments are included as follows:

___ Completed "Usage Agreement for Electronic Files Agreement along with appropriate related supplemental Agreements.

___ Files requested are specific and are not deemed vague or excessive and with individual sheet numbers identified, and the total number of sheets are correct.

___ The enclosed Payment is accurate ($120 per sheet) and is made payable to Darden Architects, Inc..

_____ _____

Print Name, Title

_____ _____

Signature Date

CONTRACTOR'S USAGE AGREEMENT
FOR ELECTRONIC FILES
PROJECT NAME: _____
DA PROJECT NO.: _____
PROJECT ARCHITECT: _____

I _____, as a duly authorized agent of_____ - (Contractor) have a contract or subcontract to perform work on the above named project. The Contractor acknowledges having received at least one (1) complete set of Contract Documents for the project and has posted all Addenda and all other contract documents issued to date.

Contractor Document Usage Agreement

The Contractor is requesting the electronic CAD files of work prepared by the Architect and/or Architect's Consultants (Design Team) on the subject project, so that the information therein may be utilized in the Contractor's work on the same project. The Contractor understands that these files are being provided as a courtesy and they are strictly intended for the Contractor's sole convenience and they are not recognized Contract Documents. This request is subject to the following conditions, which the Contractor hereby agrees to abide by:

1. It is understood and agreed to that any files and/or documents provided are instruments of professional service by the Design Team and are intended for one-time use solely in the construction of this project. They are and shall remain the property of the Architect or the Architect's Consultants, who is deemed to be the author of the drawings and data, and who shall retain all common law, statutory law, and all other rights, including copyrights.
2. The Contractor shall indemnify and hold harmless, the Design Team, its officers, directors, employees or subcontractors, to the fullest extent permitted by law, against all claims, liabilities, losses, damages, and costs, including but not limited to attorney's fees and defense costs arising out of or resulting from contractor's use of these electronic files, or in any way connected with the modification, misinterpretation, misuse, or reuse by the Contractor or by others.
3. The Contractor agrees that by using these electronic files, the Contractor is in no way relieved of the duty to fully comply with the Contract Documents, including and without limitation, the need to check, confirm and coordinate all dimensions and other details, take field measurements, verify field conditions and coordinate with all other contractors for the project.
4. It is agreed to that these electronic files are not Contract Documents. Differences may exist between electronic files and corresponding hard-copy Contract documents. The Design Team makes no representation regarding the accuracy or completeness of the electronic files provided to the contractor. In the event that a conflict arises, the signed and sealed hard-copy Contract Documents shall govern. Contractor is responsible for determining if any conflict exists.

5. The Contractor understands that the Design Team makes no representation as to the compatibility of these files with Contractor's computer hardware or software. The Contractor understands that the accuracy of the information is an artifact of the techniques used to generate it and is in no way intended to imply actual accuracy. It is also understood that the automated conversion of information and data from the system and format used by the Design Team to an alternate system or format cannot be accomplished without the possibility of introduction of inexactitudes, anomalies and errors.
6. Because information presented on the electronic files can be modified, unintentionally or otherwise, the Design Team reserves the right to edit the drawings to remove information deemed not necessary and/or remove all indications of ownership and/or involvement from each electronic display.
7. The Design Team will only furnish those drawings directly applicable to the shop drawings the contractor wishes to create. The Contractor understands that not all electronic files may be available at the Design Team's discretion.
8. The Contractor understands that the Architect's Consultants may have Additional Conditions for release of their electronic files or documents, and the Contractor hereby agree to abide by the Consultants conditions in addition to the stated conditions in this agreement. Additional Conditions (if any) are attached to this agreement.
9. The Contractor understands that the Architect and the Architect's Consultants will incur certain costs in providing the requested electronic files. The Contractor agrees to pay the Design Team a service fee of $120.00 per sheet, per delivery, prior to any delivery of the electronic files to compensate the Design Team for the labor to prepare and transmit the files and for the additional risk that this transfer will occasion.
10. Under no circumstances shall delivery of the electronic files for use by the Contractor be deemed a sale by the Owner, the Design Team, or any member of the Design Team. The Design Team makes no warranties, either expressed or implied, of merchantability or fitness for any particular purpose. In no event shall the Design Team be liable for any loss of profit or any consequential damages as a result of Contractor's use or reuse of the electronic files.

Darden Architects, Inc.
Attachments:
___ Civil ___ Structural ___ Mechanical ___ Electrical ___ Others
Description of the requested documents and/or CAD files:
_____
_____

_____ _____
Printed Name Title

_____ _____
Signed Dated

FOR USE BY ARCHITECT ONLY
___ Check Not Attached – Not Accepted
___ Accepted
___ Accepted as Noted
___ Not Accepted
By_____
Date_____
Remarks_____
_____

END OF SECTION

SECTION 014100 -- REGULATORY REQUIREMENTS

PART 1 - GENERAL

1.1 SUMMARY

A. This Section includes the following:
   1. Provide all material, labor, equipment and services necessary to completely install all materials, accessories and other related items necessary to complete the Project as indicated by the Contract Documents.
   2. Section 4-317 (c), Part 1, Title 24, CCR, requires the following:
      a. "The intent of these drawings and specifications is that the work of the alteration, rehabilitation or reconstruction is to be in accordance with Title 24, California Code of Regulations. Should any existing conditions such as deterioration of non-complying construction be discovered which is not covered by the contract documents wherein the finished work will not comply with Title 24, California Code of Regulations, a change order, or a separate set of plans and specifications, detailing and specifying the required work shall be submitted to and approved by the Division of the State Architect before proceeding with the work."

B. Related Sections: The following Project Manual Sections contain requirements that relate to this section:
   1. ALL DIVISION 00 SPECIFICATION SECTIONS.
   2. ALL DIVISION 01 SPECIFICATION SECTIONS.
   3. ALL SPECIFICATION SECTIONS IN THE FACILITY CONSTRUCTION SUBGROUP.
   4. ALL SPECIFICATION SECTIONS IN THE FACILITY SERVICES SUBGROUP.
   5. ALL SPECIFICATION SECTIONS IN THE SITE AND INFRASTRUCTURE SUBGROUP.

1.2 REFERENCES

A. References to standards, codes, specifications, recommendations and regulations, refer to the latest edition or printing in effect at the date of issue shown in the Documents unless another date is implied by the suffix number of the Standards.

B. Applicable portions of the Standards listed that are not in conflict with the Contract Documents shall be construed as specification for this work.

C. General Standards:
   1. AFPA American Forest and Paper Association
   2. ANSI American National Standards Institute
   3. ASTM American Society for Testing and Materials
   4. CAL/OSHA California Occupational Safety and Health Administration
      a. State of California Construction Safety Orders
   5. CS Commercial Standards of the US Department of Commerce
   6. EPA Environmental Protection Agency
   7. FMG Factory Mutual Group

8. NIBS National Institute of Building Sciences
9. NIST National Institute of Standards and Technology
10. NFPA National Fire Protection Association
11. OSHA Occupational Safety and Health Administration
    a. Federal Construction Safety Orders
12. PS Product Standards of the US Department of Commerce
13. SS-CDOT "Standard Specification":
    a. State of California Department of Transportation (CalTrans)
14. UL Underwriters Laboratory Incorporated
15. WH Warnock Hersey

1.3 SUBMITTALS

A. Submit in accordance with Specification Section - SUBMITTAL PROCEDURES:

B. Quality Assurance/Control Submittals:
1. Certificates:
    a. Submit three (3) copies of certificates written on the Contractor's Letterhead indicating that the required codes shall be present at the Job Site.

1.4 QUALITY ASSURANCE

A. Regulatory Requirements:
1. All codes, laws, ordinances, rules, regulations, orders and other legal requirements of City, County, State, Federal and other public authorities which bear on performances of Work shall be applicable to Project. Latest editions shall be applicable unless specified otherwise.
2. Relationship between Applicable Codes and Contract Documents. The Contract Documents have been developed with the intent to conform to the applicable codes. Nothing within the Contract Documents shall be construed to permit Work not conforming to the applicable codes.

B. Major Governing Codes And Regulations:
1. General: All work shall comply with the requirements of the following codes and regulations. Special reference in other Sections of the Specifications to a specific code will be by use of the abbreviation given in front of the Code.
    a. Freestanding equipment (if applicable) shall be provided and installed in accordance with the seismic requirements where the Project is located.
2. NOTE: * -Indicates that a copy of these codes shall be at the job site at all times.
3. AUTHORITY HAVING JURISDICTION:
    a. AHJ Authority Having Jurisdiction
4. FEDERAL LAW:
    a. ADA Americans with Disabilities Act
5. CALIFORNIA CODE OF REGULATIONS (Previously known as the California Administrative Codes)
    a. CCR-T5: California Code of Regulations, Title 5-Education.
    b. CCR-T8: California Code of Regulations, Title 8-Industrial Safety
        1) Contains the California Elevator Safety Code.
    c. CCR-T19: California Code of Regulations, Title 19-Public Safety.

d. CCR-T21: California Code of Regulations, Title 21-Public Works.
e. *CCR-T24: California Code of Regulations, Title 24, Part 1-Administrative Regulations DSA.

6. CALIFORNIA BUILDING, ELECTRICAL, MECHANICAL, PLUMBING, ENERGY, FIRE, and REFERENCED CODES
   a. *CBC: California Building Code 2019 California Code of Regulations, Title 24-Part 2, Volumes 1 and 2, CCR-T24, based on the 2018 edition of the IBC (International Building Code), with the latest California State Amendments.
   b. *CEC: California Electrical Code 2019, California Code of Regulations, Title 24-Part 3, CCR-T24, based on the 2017 edition of the NEC (National Electrical Code), with the latest California State Amendments.
   c. *CMC: California Mechanical Code 2019, California Code of Regulations, Title 24, Part 4, CCR-T24, based on the 2018 edition of the UMC (Uniform Mechanical Code), with the latest California State Amendments.
   d. *CPC: California Plumbing Code 2019, California Code of Regulations, Title 24, Part 5, CCR-T24, based on the 2018 edition of the UPC (Uniform Plumbing Code) by IAPMO, with the latest California State Amendments.
   e. *CEnC: California Energy Code 2019, California Code of Regulations, Title 24, Part 6, CCR-T24, and the latest California State Amendments.
   f. *CFC: California Fire Code 2019, California Code of Regulations, Title 24, Part 9, CCR-T24, based on the 2018 edition of the IFC (International Fire Code), with the latest California State Amendments.
      1) In addition to all other Chapters in the CFC to be followed, attention is specifically called out to comply with Chapter 33 - "Fire Safety During Construction and Demolition".
   g. CBSC: California Building Standards Commission, California Code of Regulations, Title 24, Part 10, CCR-T24.
   h. CGBSC: California Green Building Standards Code 2019, California Code of Regulations, Title 24-Part 11, CCR-T24 (CALGreen).
   i. CRSC: California Referenced Standard Code 2019, Title 24, Part 12, CCR-T24, with the latest California State Amendments.
7. DIVISION OF THE STATE ARCHITECT:
   a. DSA: Regulations of the Division of the State Architect of the State of California:
      1) ACS Access Compliance Section
      2) SSS Structural Safety Section
      3) FLS Fire and Life Safety Section
      4) IR: Interpretation of Regulations.
8. OTHER STATE AGENCIES:
   a. AQMCD: Air Quality Management Control District in the area where the project is located.
   b. RWQCB Regional Water Quality Control Board in the area where the project is located.

C. Governing Authority:
1. The provisions of the State of California, Statutes of 1933, Chapter 59, Safety of Construction of Public School Buildings Act, and the latest regulation based thereon, of the Division of the State Architect of the State of California, shall be the governing authority and shall take precedence over other applicable codes.
2. The following shall be stamped and signed by the A/E on Record or Delegated Design Professional per CBC, Part 1, Section 4-317 (h), and the following:

a. Addenda or Bulletins per Sec. 4-338(b): All addenda or bulletins shall be signed and approved by the Division of State Architect.
b. Construction Changes per Sec. 4-338(c): All Construction Changes related to structural items, fire safety issues, life safety issues and accessibility compliance issues shall be reviewed and approved by the appropriate Division of the State Architect.
c. Substitutions (per DSA) shall be treated like Addenda, or Construction Changes per Sec. 4-338(c), and IR A-6: All substitution requests and substitutions related to structural items, fire safety issues, life safety issues and accessibility compliance issues shall be reviewed and approved by the appropriate Division of the State Architect prior to fabrication and installation.

PART 2 - PRODUCTS

NOT APPLICABLE

PART 3 - EXECUTION

NOT APPLICABLE

END OF SECTION

SECTION 014200 -- REFERENCES

PART 1 - GENERAL

1.1 SUMMARY

A. This Section includes the following:
   1. Provide all material, labor, equipment and services necessary to completely install all materials, accessories and other related items necessary to complete the Project as indicated by the Contract Documents.
      a. The abbreviations, symbols and work meanings not defined in the Contract Documents are in accordance with building industry usage and convention. Questions which arise as to "meaning," or intent shall be referred to the Architect prior to bidding for interpretation.
      b. Refer to drawings for additional abbreviations and symbols.
      c. Refer to GENERAL and SPECIAL or SUPPLEMENTAL CONDITIONS and specific specification Sections for additional definitions.

B. Related Sections: The following Project Manual Sections contain requirements that relate to this section:
   1. ALL DIVISION 00 SPECIFICATION SECTIONS.
   2. ALL DIVISION 01 SPECIFICATION SECTIONS.
   3. ALL SPECIFICATION SECTIONS IN THE FACILITY CONSTRUCTION SUBGROUP.
   4. ALL SPECIFICATION SECTIONS IN THE FACILITY SERVICES SUBGROUP.
   5. ALL SPECIFICATION SECTIONS IN THE SITE AND INFRASTRUCTURE SUBGROUP.

1.2 DEFINITIONS

A. EXECUTE Perform what is required to install, apply, erect and otherwise incorporate products in to this Project.

B. FURNISH Supply products required, deliver to Project, unload, store and install as required in location as directed by Contractor, Owner or Architect.

C. GUARANTEE An assurance by the seller or installer that products or Work are as represented or will be as promised in compliance with Specifications. Synonymous and interchangeable with WARRANTY.

D. INSTALL Incorporate into this Project.

E. PRODUCTS The material, equipment, fixtures and other physical substances required to execute the Project.

F. PROVIDE Furnish and Install into this Project.

G. WARRANTY An assurance by the seller or installer that products or Work are as represented or will be as promised in compliance with Specifications. Synonymous and interchangable with GUARANTEE.

PART 2 - PRODUCTS
NOT APPLICABLE

PART 3 - EXECUTION
NOT APPLICABLE

END OF SECTION

SECTION 014523 -- TESTING AND INSPECTION SERVICES

PART 1 - GENERAL

1.1 SUMMARY

A. This Section includes the following:
1. One Project Inspector (Owner's Inspector), including Special and/or Assistant Inspector(s) (minimum Class 1 Rating), as required, will be employed by the Owner in accordance with the requirements of CCR-Title 24, Part 1, CALIFORNIA BUILDING STANDARDS ADMINISTRATIVE CODE, and the latest amendments, and will be assigned to the Project.
   a. Duties of a Project Inspector are specifically defined in CCR-Title 24, Part 1, and the latest amendments.
   b. Special Inspections (not within the Project Inspector's abilities) shall be performed by the Testing Laboratory or other Special Inspector as approved by the Owner and DSA.
      1) All Special Inspections shall be approved by DSA in accordance with CCR-T24, Part 1, Chapter 4, Group 1, Article 5, Section 4-335.1.
2. The Project Inspector shall be employed by the Owner and approved by the Architect, Structural Engineer, and DSA.
   a. See the Title Page of this Project Manual for the name of this Project.
   b. Payment of the Project Inspector will be by the Owner.
3. Provide all access, facilities and information required by the Project Inspector for the Project.

B. Related Sections: The following Project Manual Sections contain requirements that relate to this section:
1. ALL DIVISION 00 SPECIFICATION SECTIONS.
2. ALL DIVISION 01 SPECIFICATION SECTIONS.
   a. 01 45 23.01 District's Inspector (IOR) (FUSD)
   b. 01 45 23.02 Tests and Inspections (FUSD)
   c. 01 45 23.33 Code Required Special Inspections (FUSD)
   d. 01 45 23.45 Inspection by District Personnel (FUSD)
3. ALL SPECIFICATION SECTIONS IN THE FACILITY CONSTRUCTION SUBGROUP.
4. ALL SPECIFICATION SECTIONS IN THE FACILITY SERVICES SUBGROUP.
5. ALL SPECIFICATION SECTIONS IN THE SITE AND INFRASTRUCTURE SUBGROUP.

1.2 DEFINITIONS

A. Responsibilities of the Project Inspector:
1. The Project Inspector will be required to provide inspection of the Work (including "Continuous Inspection") as required in CCR-T24, Part 1:
   a. Educational Work: Chapter 4, Group 1, Article 6, 4-342 (b).

2. The Project Inspector will report to the Owner, the Architect and DSA as required during the progress of the Work.
3. The Project Inspector shall review all Pay Requests prior to submittal to the Architect.

B. Responsibilities of the Contractor:
1. Written Statement of Responsibility to the Owner and the Authority Having Jurisdiction per CBC Chapter 17A:
   a. Provide a written Statement of Responsibility regarding the Contractor's understanding of the special inspection requirements and identifying individuals in their firm responsible for exercising control over the conformance to the construction documents.
2. Provide the Project Inspector free access to any and all parts of the Project at all times.
3. Provide the Project Inspector information necessary to keep him fully informed with respect to the progress, manner and character of Work.
4. Perform no Work in absence of the Project Inspector unless alternate arrangements have been made in advance and agreed to by the Owner, the Architect and DSA.
5. The Owner's "Inspection of Work" by the Project Inspector shall not relieve the Contractor from any conditions of this Contract.

1.3 SUBMITTALS

A. Submit in accordance with Specification Section - SUBMITTAL PROCEDURES:
1. Quality Assurance/Control Submittals:
   a. Written Statement of Responsibility to the Owner and the Authority Having Jurisdiction per CBC Chapter 17A.
   b. Project Inspector's Field Reports:
      1) Submit four (4) copies of reports.

1.4 QUALITY ASSURANCE

A. Regulatory Requirements:
1. In accordance with Specification Section - REGULATORY REQUIREMENTS.

PART 2 - PRODUCTS

NOT APPLICABLE

PART 3 - EXECUTION

NOT APPLICABLE

END OF SECTION

SECTION 014529 -- TESTING LABORATORY SERVICES

PART 1 - GENERAL

1.1 SUMMARY

A. This Section includes the following:
   1. The Owner's Testing Laboratory shall be employed by the Owner and approved by the Architect, Structural Engineer, and DSA.
      a. Payment of the Owner's Testing Laboratory will be by the Owner.
      b. The Owner shall pay for all initial testing indicated as paid for by Owner except as specified otherwise or in the schedule at the end of this section.
         1) Cost of re-testing (due to initial failures) shall be back-charged to the Contractor, and those excess costs will be deducted from the Contract Price.
         2) Cost of testing (due to shop fabrication or in-plant testing out of state and beyond a 75 mile radius of the Project Site) shall be back-charged to the Contractor, and those excess costs will be deducted from the Contract Price.
   2. Provide all access, facilities and information required for the testing of the various portions of the Work as required by Regulatory Agencies, Planning, Agencies, Building Agencies, and other Governmental Inspectors, the Contract Documents and the Owner.

B. Related Sections: The following Project Manual Sections contain requirements that relate to this section:
   1. ALL DIVISION 00 SPECIFICATION SECTIONS.
   2. ALL DIVISION 01 SPECIFICATION SECTIONS.
   3. ALL SPECIFICATION SECTIONS IN THE FACILITY CONSTRUCTION SUBGROUP.
   4. ALL SPECIFICATION SECTIONS IN THE FACILITY SERVICES SUBGROUP.
   5. ALL SPECIFICATION SECTIONS IN THE SITE AND INFRASTRUCTURE SUBGROUP.

1.2 DEFINITIONS

A. Responsibility of the Testing Laboratory:
   1. Taking all specimens.
   2. Performing Tests.
      a. The Testing Laboratory's duties shall include all tests required by the DSA T & I Sheet prepared at the time of DSA Approvals, and any other testing as determined by authorities or the Project Inspector during the course of the work.
      b. Special Inspections (not within the Project Inspector's abilities) shall be performed by the Testing Laboratory or other Special Inspector as approved by the Owner and DSA.
         1) All Special Inspections shall be approved by DSA in accordance with CCR-T24, Part 1, Chapter 4, Group 1, Article 5, Section 4-335.
   3. Writing Test Reports
   4. Review of "Continuous Inspection" reports by the Project Inspector.

a. Portions of the Work requiring "Continuous Inspection" shall be performed by the Project Inspector (if qualified) and all reports will be reviewed by the Testing Laboratory.

5. Distribute Test Reports to the Owner, Architect, applicable Engineer, Contractor and to DSA.

B. Responsibilities of the Contractor:

1. Contractor shall provide a Testing Schedule that is in accordance with the following:
   a. Format of the Testing Schedule shall be in accordance with Specification Section – CONSTRUCTION SCHEDULES.
   b. Cooperates with the Testing Laboratory's schedule of required testing.
   c. Contractor shall coordinate Construction Schedule and Testing Schedule.
      1) Format of testing schedule in accordance with Specification Section – CONSTRUCTION SCHEDULES.
2. Cooperation with testing laboratory:
   a. Provide access to Work being tested.
   b. Provide test samples as selected by testing laboratory.
   c. Schedule Work so that there shall be no excessive inspection time.
      1) At times that an inspector is required, sufficient work shall be laid out and adequate personnel supplied so that the inspector's time shall be used to full advantage.
      2) If inspection costs become excessive because of poor shop or construction procedure, such excess costs will be paid for by the Owner, but deducted from the Contract Price.
   d. Inspections and tests required by regulatory agencies shall be the responsibility of and shall be paid for by the Owner unless specified otherwise.
   e. Inspections and testing performed exclusively for the Contractor's convenience shall be the sole responsibility of the Contractor.
   f. Test Reports:
      1) Distribute test reports and related instruction to insure all required re-testing and/or replacement of materials.
   g. Payment of Testing:
      1) All testing shall be paid for by the Owner.
3. Contractor shall be backcharged for re-testing, excessive distance from the Project Site, or extra testing required because of initial failures.

1.3 SUBMITTALS

A. Submit in accordance with Specification Section - SUBMITTAL PROCEDURES:

1. Quality Assurance/Control Submittals:
   a. Test Reports:
      1) Submit four (4) copies of testing laboratory's report.

1.4 QUALITY ASSURANCE

A. Qualifications:

1. Testing Laboratory Qualifications:
   a. In accordance with the latest Edition of ASTM E-329.

B. Regulatory Requirements and Reference Standards:
1. In accordance with Specification Section - REGULATORY REQUIREMENTS, and the following:
a. In accordance with regulatory agencies and appropriate ASTM Standards.

PART 2 - PRODUCTS
NOT APPLICABLE

PART 3 - EXECUTION

3.1 SCHEDULES

A. Testing Schedule at the end of this section should be used as a guide only and it is not considered a complete list. Refer to regulatory agency requirements and specific specification section for complete testing requirements.

B. TESTING SCHEDULE
1. 03 20 00 - REINFORCEMENT
a. Rebar Material per ACI 318, CBC TABLE 1705A.2.1, CBC Sections 1903A.1, 1905A, and 1910A.
1) Paid by Owner
b. Continuous Inspection of Welds per ACI 318, CBC TABLE 1705A.2.1, CBC Sections 1903A.8, 1905A, and 1910A.
1) Paid by Owner
2. 03 30 00 - CAST-IN-PLACE CONCRETE
a. Cement Material per ACI 318, and CBC Sections 1903A, 1905A, and 1910A.
1) Paid by Owner
b. Aggregate Material per ACI 318.
1) Paid by Owner
c. Concrete Mix per ACI 318. CBC Sections 1903A and 1910A.
1) Paid by Owner
d. Concrete Strength Tests per ACI 318.
1) Paid by Owner
e. Concrete Compression Tests per ACI 318.
1) Paid by Owner
3. DIV. 26 - LIGHTING
a. Equipment Operation
1) Paid by Contractor
4. DIV. 27 - MASTER CLOCK AND PUBLIC ADDRESS SYSTEM
a. Equipment Operation
1) Paid by Contractor

C. Division of the State Architect "Statement of Structural Tests and Special "Inspections":
1. In addition to the TESTING SCHEDULE cited above, and elsewhere within the documents, DSA requires the Contractor to schedule and manage the following tests to be performed and reported as required for this Project.

2. Failure to schedule these tests is grounds for reduction in Monthly Payment Request authorization, and may delay distribution of the Final Payment.

END OF SECTION

SECTION 015000 -- TEMPORARY FACILITIES AND CONTROLS

Refer to FUSD General Conditions and General Requirements, 01 51 00.01 Utilities, 01 52 19.01 Sanitary Facilities, 01 55 19.02 District Inspector (IOR) Private Office.

END OF SECTION

SECTION 016400 -- OWNER-FURNISHED ITEMS

PART 1 - GENERAL

1.1 SUMMARY

A. This Section includes the following:
   1. Provide all materials, labor, equipment, and services necessary to prepare for installation for those items, noted or scheduled within the Contract Documents, indicated as follows:
      a. CFCI - Contractor Furnished, Contractor Installed
      b. OFCI - Owner Furnished, Contractor Installed
      c. OFOI - Owner Furnished, Owner Installed

B. Related Sections: The following Project Manual Sections contain requirements that relate to this section:
   1. ALL DIVISION 00 SPECIFICATION SECTIONS.
   2. ALL DIVISION 01 SPECIFICATION SECTIONS.
   3. ALL SPECIFICATION SECTIONS IN THE FACILITY CONSTRUCTION SUBGROUP.
   4. ALL SPECIFICATION SECTIONS IN THE FACILITY SERVICES SUBGROUP.
   5. ALL SPECIFICATION SECTIONS IN THE SITE AND INFRASTRUCTURE SUBGROUP.

1.2 DEFINITIONS

A. Unless otherwise defined in the GENERAL CONDITIONS, the following definitions apply for this project:
   1. CFCI: CONTRACTOR FURNISHED, CONTRACTOR INSTALLED
      a. When and if the indication "CFCI" is noted on the drawings or listed in the specifications, such items are shown or listed for information and will be furnished by and installed by the Contractor. Such a designation is listed only for clarity, in order to set the item(s) apart from the OFCI, OFOI, and OFVI related item(s).
      b. All item(s) shown or listed in the drawings and specifications without any indication are in the Contract and are part of the Work unless specifically noted otherwise.
   2. OFCI: OWNER FURNISHED, CONTRACTOR INSTALLED
      a. When and if the indication "OFCI" is noted on the drawings or listed in the specifications, such item(s) are shown or listed for information and will be furnished by Owner and installed by the Contractor. The Contractor shall coordinate and verify all dimensions and details necessary for the proper installation.
   3. OFOI: OWNER FURNISHED, OWNER INSTALLED
      a. When and if the indication "OFOI" is noted on the drawings or listed in the specifications, such item(s) are shown or listed for the purpose of general information and will be furnished and installed by Owner. The Contractor shall coordinate and verify all dimensions and details necessary for proper installation.

1.3 SUBMITTALS

A. Submit in accordance with Specification Section - SUBMITTAL PROCEDURES:
   1. Coordination Drawings:
      a. Submit installer's coordination drawings or other documents indicating the work of this section with that of related work of other sections for proper interface of the completed work. Installer shall coordinate and obtain approvals from the work of other related sections prior to submitting to the Architect.
      b. The Owner will provide Product Data, Shop Drawings, Piping and Wiring Diagrams, Catalog Data Sheets for any items provided under this Specification Section.
   2. Closeout Submittals in accordance with Specification Sections in Division One:
      a. Project Record Documents in accordance with Specification Section - PROJECT DOCUMENTS.

1.4 QUALITY ASSURANCE

A. Regulatory Requirements:
   1. In accordance with Specification Section - REGULATORY REQUIREMENTS, and the following:
      a. CARB Materials and equipment used for this Project shall comply with the current applicable regulations of the California Air Resources Board (CARB) and the Environmental Protection Agency (EPA). Regulatory changes may affect the formulation, availability, or use of the specified coatings. Confirm availability of coatings to be used prior to use, and notify the Architect of any recent changes in the Local California Air District Standards where the Project is located, that may have occurred after the preparation of this specification section.

B. Meetings:
   1. Progress Meetings: Scheduled by the Contractor for the proper performance of the work.
      a. Minimum agenda shall be to review the work progress; discuss field observations, problems, and decisions; identification of any potential problems which may impede planned progress; corrective measures to regain projected schedules; and maintenance of quality and work standards in accordance with manufacturer's warranty requirements.
   2. Final Inspection: Scheduled by the Contractor upon proper completion of the work.
      a. Minimum agenda shall be a walkover inspection to identify problems which may impede the issuance of any warranties or guarantees, and discussion of maintaining the work until substantial completion notice for the project is filed.
   3. Participants (or designated representative of) invited to attend each of the above meetings shall be as follows:
      a. Contractor.
      b. Owner.
      c. Architect.
      d. Installer.
      e. Material Manufacturer(s).
      f. Subcontractors, as appropriate (including any accessory subcontractors).

1.5 DELIVERY, STORAGE, AND HANDLING

A. Packing, shipping, handling, and unloading:
   1. Products shall be handled in such a manner as to assure that they are free from dents, scratches and other damage. Damaged products will not be accepted. Contractor shall inspect prior to unloading, for any damaged goods, and if OK, will allow unloading and be responsible for the goods.

B. Acceptance at Site:
   1. The Contractor shall accept delivery of any items and the responsibility for all items to be furnished to him by the Owner.

C. Storage and protection:
   1. Owner Furnished Equipment: The Owner will coordinate and inform the Contractor as to delivery dates for Owner Furnished Equipment to the Project Site. The Contractor shall be responsible for unloading, uncrating, and protecting such equipment.
   2. When only a supporting device, or sub-assembly is to be installed by the Contractor the Owner shall provide only that portion and shall store and safeguard those portions to be installed later by others.
   3. All products shall be protected, handled, and stored in complete compliance with the manufacturer's printed instructions to protect the Owner from warranty infringements or loss of the full function of the item specified.

1.6 PROJECT CONDITIONS OR SITE CONDITIONS

A. Existing Conditions:
   1. Examine site and compare it with the drawings and specifications. Thoroughly investigate and verify conditions under which the work is to be performed. No allowance will be made for extra work resulting from negligence or failure to be acquainted with all available information concerning conditions necessary to estimate the difficulty or cost of the work.
   2. Examine all preparatory work to determine its suitability and completeness. Notify the responsible Contractor of any deficiencies which must be corrected prior to installation.
   3. Be satisfied that all conditions affecting installation, operation or function are suitable for installation of the items scheduled.
   4. After installation, and acceptance by the inspector and the Architect, the Contractor shall provide protective guards, covers or barricades as required by the manufacturer.
   5. The Contractor shall promptly repair, refurbish, or replace items damaged by his operations to a condition satisfactory to the Owners representatives and at no cost to the Owner.

1.7 WARRANTY

A. The Contractor shall provide access to the installed items or prepared substrates for the inspection of the manufacturers representatives, for the purpose of affirming the warranties scheduled.

B. All work shall be performed in full accordance with the manufacturers warranty requirements and all governing codes.

PART 2 - PRODUCTS
NOT APPLICABLE

PART 3 - EXECUTION

3.1 PREPARATION

A. Coordination:
1. Coordinate work under this specification section with work specified under other sections to ensure proper and adequate interface of work.
   a. Prepare all substrate blocking as required by the items Furnished By Owner.
   b. Prepare all wiring and piping connections as required by the items Furnished By Owner.

B. Protection:
1. Protect all adjacent surfaces from drips, spray, air pollution of surrounding environment, and other damage from work under this specification section.

C. Surface preparation:
1. Prepare surface in accordance with manufacturer's instructions and recommendations.
2. Clean substrates of substances (oil, grease, rolling compounds, incompatible primers, loose mill scale, etc.) which could impair bond or installation of materials specified within the Contract Documents.

3.2 INSTALLATION

A. General:
1. In accordance with manufacturer's instructions and recommendations unless specifically noted otherwise.
2. In accordance with approved submittals.
3. In accordance with Regulatory Requirements.
4. Set plumb, level, and square.

B. Layout:
1. Lines shall be straight and true.

C. Material and Equipment to be installed:
1. All items so noted or scheduled to be OFCI shall be unloaded, completely installed and placed in operable condition under this Contract.

3.3 CLEANING

A. Clean in accordance with Specification Section - PROJECT CLOSEOUT.
1. Clean any soiled surfaces at the end of each day, minimum.

2. In accordance with manufacturer's instructions and recommendations.

3.4 SCHEDULES

A. This schedule is provided for the convenience of the General Contractor for items not scheduled elsewhere on the drawings or in the Specification Sections. Refer to Drawings for additional items not listed below:

B. Classroom Equipments: STATUS
   1. Flag Holder OFCI
   2. Pencil Sharpeners OFCI
   3. Classroom Telephone hand set OFOI

END OF SECTION

SECTION 017123 -- FIELD ENGINEERING

PART 1 - GENERAL

1.1 SUMMARY

A. This section includes the following:
   1. Section includes requirements governing execution of the work including, but not limited to, the following:
      a. Construction layout
      b. Field engineering and surveying

B. Related Sections: The following Project Manuel Sections contain requirements that relate to this section:
   1. ALL DIVISION 00 SPECIFICATION SECTIONS
   2. ALL DIVISION 01 SPECIFICATION SECTIONS
   3. 02 41 19 SELECTIVE DEMOLITION
   4. 03 11 01 CONCRETE FORMWORK
   5. 03 30 00 CAST-IN-PLACE CONCRETE
   6. ALL SPECIFICATION SECTIONS IN THE FACILITY SERVICES SUBGROUP
   7. ALL SPECIFICATION SECTIONS IN THE SITE AND INFRASTRUCTURE SUBGROUP.

1.2 SUBMITTALS

A. Submit in accordance with specification section – SUBMITTAL PROCEDURES:
   1. Coordination Drawings:
      a. Utility Coordination Drawing(s)
   2. Quality Assurance/Control Submittal:
      a. Qualification Data for Civil Engineer/Surveyor
      b. Intermediate Certificate of Survey Compliance
      c. Final Certificate of Survey Compliance
   3. Closeout Submittals in accordance with the following:
      a. As-built Survey Drawing(s)
      b. Project "Record" Survey Drawing

1.3 QUALITY ASSURANCE

A. Qualifications:
   1. Civil Engineer/Surveyor Qualifications:
      a. A professional Civil Engineer or Land Surveyor who is licensed to practice in the State of California.
      b. Has successfully completed three (3) projects of similar scope and size to that indicated for this project.

B. Regulatory Requirements:

1. In accordance with Specification Section – REGULATORY REQUIREMENTS and the following:
   a. CARB Materials and equipment used for this project shall comply with the current applicable regulations of the California Air Resources Board and the Environmental Protection Agency (EPA), in the area where the project is located.
   b. CF County of Fresno, codes and ordinances

C. Certificates:
1. Intermediate Certificate of Survey Compliance:
   a. Provide certification letter on contractor's letterhead stating the project complies with the requirements of the contract documents at the completion of building pad construction and installation of underground utilities outside of building pads is complete. Certification letter must be stamped and signed by the qualified Civil Engineer/Surveyor.
2. Final Certificate of Survey Compliance:
   a. Provide certification letter on contractor's letterhead stating the project complies with the requirement of the contract documents at the completion of all above ground improvements and finish grading.

D. Meetings:
1. Pre-Installation: Scheduled by the Contractor prior to the start of work.
   a. Coordinate the work with all other related work.
   b. Identify any potential problems, which may impede planned progress and proper installation of work regarding quality of installation and warranty requirements.
2. Progress: Scheduled by the Contractor during the performance of the work.
   a. Review for proper installation of work progress.
   b. Identify any installation problems and acceptable corrective measures.
   c. Identify any measures to maintain or regain project schedule if necessary.
3. Completion: Scheduled by the Contractor upon proper completion of the work.
   a. Inspect and identify any problems, which may impede issuance of warranties or guaranties.
   b. Maintain installed work until the Notice of Substantial Completion has been filed.

1.4 PROJECT CONDITIONS OR SITE CONDITIONS

A. Existing Conditions:
1. Examine site and compare it with the drawings and specifications. Thoroughly investigate and verify conditions under which the work is to be performed. No allowance will be made for extra work resulting from negligence or failure to be acquainted with all available information concerning conditions necessary to estimate the difficulty or cost of the work.

PART 2 - PRODUCTS

NOT APPLICABLE

PART 3 - EXECUTION

3.1 EXAMINATION

A. Existing Conditions:
   1. The existence and location of underground utilities indicated as existing are not guaranteed. Before beginning sitework, investigate and verify the existence, location, and elevation of all underground utilities and other construction affecting the Work.
      a. Call a local utility locator service (such as USA – "Underground Service Alert") for the task of locating any project related utilities.
      b. Verify the location and invert elevation at points of connection of sanitary sewer system and storm drainage system.
      c. Accurately document vertical and horizontal measurements and elevations uncovered or verified.

B. Coordination:
   1. Before proceeding to lay out the Work, verify layout information shown on the drawings in relation to the property survey, topographic survey, and existing benchmarks.
   2. Drawings have been provided showing improvements and underground systems for foundations, storm drainage, sewer, water, gas, mechanical lines, electrical lines, and site improvements. Coordinate and verify the accuracy of the drawing locations and elevations as they relate to each other, with existing utility lines, and building pad earthwork zones of influence.
      a. Provide 1"=20' scaled and dimensioned Utility Coordination Drawing.
      b. No improvements shall be executed until the Utility Coordination Drawing is reviewed by the Architect for general conformance with the Contract Documents.
   3. Coordinate Layout of Work performed under other sections of the Specifications.
   4. If layout conflicts are encountered, report to Architect and then prepare recommendation(s) for correction.
   5. Close and careful coordination is required between work of the Contract and that of any future work to follow.
   6. Work under this Contract shall accommodate the installation of future work.

3.2 PREPARATION

A. Existing Utility Information:
   1. Furnish information to public utilities that is necessary to adjust, move, or relocate existing utility structures, utility poles, lines, services, or other utility appurtenances located in or affected by construction. Coordinate with authorities having jurisdiction.

3.3 CONSTRUCTION

A. Layout of Work:
   1. Engage a Civil Engineer/Surveyor to Layout the Work using accepted surveying practices and be responsible for all reference points, benchmarks, lines, elevations, and measurements required for Work under this Contract.
   2. Reference points:

a. Locate existing permanent benchmarks, control points, and similar reference points before beginning the work.
b. Do not change or relocate existing benchmarks or control points without approval of the Architect.
c. Replace lost or destroyed permanent benchmarks and control points. Base replacements on the original survey control points.

3. Benchmarks:
   a. Establish and maintain a minimum of two (2) permanent benchmarks on the project site, referenced to data established by survey control points.
   b. Where the actual location or elevation of layout points cannot be marked, provide temporary reference points sufficient to locate the Work.
   c. Use established benchmarks and control points to set lines and levels at each floor of construction and elsewhere as needed to locate each element of the Project.
4. Locate construction access to site parking, storage areas, and temporary facilities and controls.
5. Locate and layout control lines and levels for structures, foundations, column and wall grids, and floor levels including those required for mechanical and electrical work. Transfer survey markings and elevations for use with control lines and levels.
   a. Level foundations and piers from two or more locations.
6. Locate and layout site improvements, including pavement, grading, fill and topsoil placement, utility slopes, and rim and invert elevations.
7. Inform installers of lines and levels to which they must comply.
8. Check the location, level, and plumb of every major element as the Work progresses.
9. Remove temporary reference points when no longer needed. Restore marked construction to its original condition.

3.4 FIELD QUALITY CONTROL

A. Maintain a log of layout control work. Record deviations from required lines and levels. Include beginning and ending dates and times of surveys, weather conditions, name and duty of each survey party member, and types of instruments and tapes used. Make the log available for reference by the Inspector and Architect.

B. Maintain As-built Survey Drawing(s) of all underground, surface, and above ground improvements and grades with measurements for both vertical and horizontals dimensions.
   1. Record all addendum and issued change documents.
   2. Upon project completion stamp and sign As-built Survey Drawing(s).

C. Check documented measurements and elevations at completion of building pads and underground utilities against contract documents. The Contractor shall correct out of compliance Work before proceeding with the next element of Work. As-built Survey Drawing(s) shall be current. When all Work at this stage is in compliance with the contract documents, issue the Intermediate Certificate of Survey Compliance.

D. Check documented measurements and elevations at completion of finish grading and site improvements, except for landscape and irrigation work, against contract documents. The Contractor shall correct out of compliance Work before proceeding with the next element of Work. As-built Survey Drawing(s) shall be complete. When all Work at this stage is in compliance with the contract documents, issue the Final Certificate of Survey Compliance.

E. The Civil Engineer/Surveyor shall prepare Project "Record" Survey Drawing in accordance with Specification Section - PROJECT DOCUMENTS.
   1. The Project "Record" Survey Drawing shall contain all of the vertical and horizontal measurements and elevations of reference points, benchmarks, utility lines, grade contours, grade breaks, building floors, major vegetation, and sitework improvements.
   2. The Project "Record" Survey Drawing shall be stamped and signed by the qualified Civil Engineer/Surveyor.
   3. The As-built Survey Drawing(s) shall used in preparation of the Project "Record" Survey Drawing.

3.5 PROTECTION

A. Preserve and protect permanent benchmarks, control points, reference points, and staking during construction operations.

END OF SECTION

SECTION 017329 -- CUTTING AND PATCHING

PART 1 - GENERAL

1.1 SUMMARY

A. This Section includes the following:
   1. Provide all material, labor, equipment and services necessary for cutting and patching existing materials, accessories and other related items necessary to remodel the Project as indicated by the Contract Documents.

B. Related Sections: The following Project Manual Sections contain requirements that relate to this section:
   1. ALL DIVISION 00 SPECIFICATION SECTIONS.
   2. ALL DIVISION 01 SPECIFICATION SECTIONS.
   3. ALL SPECIFICATION SECTIONS IN THE FACILITY CONSTRUCTION SUBGROUP.
   4. ALL SPECIFICATION SECTIONS IN THE FACILITY SERVICES SUBGROUP.
   5. ALL SPECIFICATION SECTIONS IN THE SITE AND INFRASTRUCTURE SUBGROUP.

1.2 DEFINITIONS

A. Cutting: Removal of existing construction necessary to permit installation or performance of Work.

B. Patching: Fitting and repair work required to restore surfaces to original conditions after installation of Work.

1.3 SUBMITTALS

A. Submit in accordance with Specification Section - SUBMITTAL PROCEDURES:
   1. Coordination Drawings:
      a. Submit any installer's coordination drawings indicating the work of this section with that of related work of other sections for proper interface of the completed work. Installer shall coordinate and obtain approvals from the work of other related sections prior to submitting to the Architect.

1.4 QUALITY ASSURANCE

A. Cutting and Patching Conference: Before proceeding, meet at Project site with parties involved in cutting and patching, including mechanical and electrical trades.
   1. Review areas of potential interference and conflict.
   2. Coordinate procedures and resolve potential conflicts before proceeding.

B. Structural Elements: Do not cut and patch structural elements in a manner that could change their load-carrying capacity or load-deflection ratio.

C. Operational Elements: Do not cut and patch operating elements and related components in a manner that results in reducing their capacity to perform as intended or that results in increased maintenance or decreased operational life or safety.

D. Visual Requirements: Do not cut and patch construction in a manner that results in visual evidence of cutting and patching. Do not cut and patch construction exposed on the exterior or in occupied spaces in a manner that would, in Architect's opinion, reduce the building's aesthetic qualities. Remove and replace construction that has been cut and patched in a visually unsatisfactory manner.

E. The Contractor shall do all cutting, fitting or patching of existing construction and his work as may be required to make the several parts come together properly and ready to receive or be received by work of other contractors as shown, or reasonably implied by the drawings and specifications for the completed structure. All work shall be as directed by the Architect to achieve the intended work and degree of finish shown.

F. Any cost caused by defective or ill-timed work shall be borne by the party responsible therefor.

1.5 WARRANTY

A. Existing Warranties: Remove, replace, patch, and repair materials and surfaces cut or damaged during cutting and patching operations, by methods and with materials so as not to void existing warranties.

PART 2 - PRODUCTS

2.1 MATERIALS

A. General: Comply with requirements specified in other Sections of these Specifications.

B. Existing Materials: Use materials identical to existing materials. For exposed surfaces, use materials that visually match existing adjacent surfaces to the fullest extent possible.
   1. If identical materials are unavailable or cannot be used, use materials that, when installed, will match the visual and functional performance of existing materials.

PART 3 - EXECUTION

3.1 EXAMINATION

A. Examine surfaces to be cut and patched and conditions under which cutting and patching are to be performed.
   1. Compatibility: Before patching, verify compatibility with and suitability of substrates, including compatibility with existing finishes or primers.
   2. Proceed with installation only after unsafe or unsatisfactory conditions have been corrected.

3.2 PREPARATION

A. Temporary Support: Provide temporary support of Work to be cut.

B. Protection: Protect existing construction during cutting and patching to prevent damage. Provide protection from adverse weather conditions for portions of Project that might be exposed during cutting and patching operations.

C. Adjoining Areas: Avoid interference with use of adjoining areas or interruption of free passage to adjoining areas.

D. Existing Services: Where existing services are required to be removed, relocated, or abandoned, bypass such services before cutting to avoid interruption of services to occupied areas.

3.3 FIELD QUALITY CONTROL

A. General: Employ skilled workers to perform cutting and patching. Proceed with cutting and patching at the earliest feasible time, and complete without delay.
   1. Cut existing construction to provide for installation of other components or performance of other construction, and subsequently patch as required to restore surfaces to their original condition.

B. Cutting: Cut existing construction by sawing, drilling, breaking, chipping, grinding, and similar operations, including excavation, using methods least likely to damage elements retained or adjoining construction. If possible, review proposed procedures with original Installer; comply with original Installer's written recommendations.
   1. In general, use hand or small power tools designed for sawing and grinding, not hammering and chopping. Cut holes and slots as small as possible, neatly to size required, and with minimum disturbance of adjacent surfaces. Temporarily cover openings when not in use.
   2. Existing Finished Surfaces: Cut or drill from the exposed or finished side into concealed surfaces.
   3. Concrete or Masonry: Cut using a cutting machine, such as an abrasive saw or a diamond-core drill. *Do not overcut concrete corners* – hand chip all corners to prevent over-cutting lines. Cut any masonry pavers at grout lines, and *don't overcut* into adjacent brick that is to remain.
   4. Excavating and Backfilling: Comply with requirements in applicable Division 2 Sections where required by cutting and patching operations.
   5. Mechanical and Electrical Services: Cut off pipe or conduit in walls or partitions to be removed. Cap, valve, or plug and seal remaining portion of pipe or conduit to prevent entrance of moisture or other foreign matter after cutting.
   6. Proceed with patching after construction operations requiring cutting are complete.

C. Grinding and Sandblasting: Where grinding and sandblasting is required of existing construction, perform in accordance with industry standards for proper preparation of new construction or finishes.

D. Patching: Patch construction by filling, repairing, refinishing, closing up, and similar operations following performance of other Work. Patch with durable seams that are as invisible as possible. Provide materials and comply with installation requirements specified in other Sections of these Specifications.

1. Inspection: Where feasible, test and inspect patched areas after completion to demonstrate integrity of installation.
2. Exposed Finishes: Restore exposed finishes of patched areas and extend finish restoration into retained adjoining construction in a manner that will eliminate evidence of patching and refinishing.
    a. All hard paving and walk replacement shall be flush with adjacent existing construction. Compact existing subgrade so that there is no settling of adjacent horizontal surfaces greater than 1/4", and that all surfaces are ADA compliant.
    b. When altering surfaces in brick paving, match nearby adjacent horizontal concrete surfaces in color and texture. Take care to protect adjacent brick surfaces from concrete slurry and finishing operations. Clean exposed surfaces of brick immediately so that no signs of adjacent concrete work is seen.
    c. Match existing adjacent exposed aggregate concrete paving (color and texture) when construction is proposed for areas paved with exposed aggregate concrete.
    d. Match existing adjacent colored concrete paving (color and texture) when construction is proposed for areas paved with colored concrete.
3. Floors and Walls: Where walls or partitions that are removed extend one finished area into another, patch and repair floor and wall surfaces in the new space. Provide an even surface of uniform finish, color, texture, and appearance. Remove existing floor and wall coverings and replace with new materials, if necessary, to achieve uniform color and appearance.
    a. Where patching occurs in a painted surface, apply primer and intermediate paint coats over the patch and apply final paint coat over entire unbroken surface containing the patch. Provide additional coats until patch blends with adjacent surfaces.
4. Ceilings: Patch, repair, or rehang existing ceilings as necessary to provide an even-plane surface of uniform appearance.
5. Exterior Building Enclosure: Patch components in a manner that restores enclosure to a weathertight condition.

END OF SECTION

SECTION 017419 -- CONSTRUCTION WASTE MANAGEMENT AND DISPOSAL

PART 1 - GENERAL

1.1 SUMMARY

A. This section includes the following:
   1. Requirements governing execution of the work including, but not limited to, the following:
      a. Salvaging non-hazardous demolition waste.
      b. Recycling non-hazardous construction and demolition waste.
      c. Disposing of non-hazardous construction and demolition waste.

B. Related Sections: The following Project Manuel Sections contain requirements that relate to this section:
   1. ALL DIVISION 00 SPECIFICATION SECTIONS
   2. ALL DIVISION 01 SPECIFICATION SECTIONS
   3. ALL SPECIFICATION SECTIONS IN THE FACILITY CONSTRUCTION SUBGROUP
   4. ALL SPECIFICATION SECTIONS IN THE FACILITY SERVICES SUBGROUP
   5. ALL SPECIFICATION SECTIONS IN THE SITE AND INFRASTRUCTURE SUBGROUP

1.2 DEFINITIONS

A. Construction Waste: Building and site improvement materials and other solid waste resulting from construction, modernization, remodeling, renovation, or repair operations. Construction waste includes packaging.

B. Demolition Waste: Building and site improvement materials resulting from demolition or selective demolition and site clearing operations.

C. Disposal: Removal off-site of construction and demolition waste and subsequent sale, recycling, reuse, or deposit in landfill acceptable to authorities having jurisdiction.

D. Recycle: Recovery of construction or demolition waste for subsequent processing in preparation for reuse.

E. Salvage: Recovery of construction or demolition waste and subsequent sale or reuse in another facility.

1.3 SYSTEM DESCRIPTION

A. Performance Requirements
   1. General:

a. Achieve end-of-project rate for salvage/recycling of minimum [50][75][90] percent by weight of total non-hazardous construction and demolition waste generated by the Work.
b. Practice efficient waste management in the use of materials in the course of the Work.
c. Use all reasonable means to divert construction demolition waste from landfills and incinerators.

1.4 SUBMITTALS

A. Submit in accordance with Specification Section – SUBMITTAL PROCEDURES:
1. Quality Assurance/Control Submittal:
a. Waste Management Plan
b. Waste Management Progress Reports

1.5 QUALITY ASSURANCE

A. Regulatory Requirements:
1. In accordance with Specification Section - REGULATORY REQUIREMENTS and the following:
a. CARB Materials and equipment used for this project shall comply with the current applicable regulations of the California Air Resources Board and the Environmental Protection Agency (EPA), in the area where the project is located.
b. CAL/OSHA California Division of Occupational Safety and Health Administration.
c. CF County of Fresno, codes and ordinances
d. EPA Environmental Protection Agency

B. Waste Management Plan:
1. Prior to commencing the Work, submit Waste Management Plan. The Plan must include, but not limited to, the following:
a. Contractor's name and project identification information.
b. Procedures to be implemented.
c. Materials to be salvaged, recycled, or disposed.
d. Estimated quantities of material broken down by material categories.
e. Names and locations of entities who receive salvaged and recycled materials.
f. Tonnage calculations that demonstrate that the Contractor will salvage, re-use, or recycle the minimum percentage by weight of the construction and demolition waste materials generated by the Work.

C. Waste Management Progress Reports:
1. Submit the Report with each application for progress payment.
a. Failure to submit the Report and it supporting documentation can render the application for progress payment incomplete and delay the progress payment.
2. Each Report must include, but not limited to, the following:
a. List of material categories.
b. Weight quantity of waste by material category.
c. Weight quantity of waste salvaged.
d. Weight quantity of waste recycled.

e. Total weight quantity of salvaged and recycled waste by material category.
f. Weight percentage of waste salvaged and recycled by material category.
g. Include manifests, weight tickets, receipts, and invoices specifically identifying the salvaged, reused, and recycled materials.
h. Signature line for Contractor.

D. Meetings:
1. Pre- Demolition……Schedule prior to the start of work.
a. Coordinate the work with other work being performed.
b. Identify any potential problems, which may impede the proper disposal of materials.
c. Review areas where waste and recycle bins will be located.
d. Review where salvaged materials will be stored.
e. Review demolition waste disposal and material recycling procedures and environmental goals per Waste Management Plan with all subcontractors and waste haulers.
2. Progress:……Scheduled by the Contactor during the performance of the work.
a. Review for maintaining proper procedures.
b. Inspect and identify any problems and acceptable corrective measures.
3. Completion:……Scheduled by the Contactor upon proper completion of the work.
a. Inspect and identify any problems.
b. Submit final Progress Report summarizing total construction and demolition waste weights, percentages salvaged, recycled, and disposed.

1.6 DELIVERY, STORAGE, AND HANDLING

A. Cleaning, handling, and packing:
1. Salvaged Items shall be handled in such a manner as to assure that they are free from damage.
2. Salvaged Items shall be cleaned and packed or cleaned and palleted before off-site transport.

B. Storage and protection
1. Salvaged Items shall be stored in a dry, protected area prior to transport.
2. Cover with protective waterproof covering providing for adequate air circulation and ventilation.

1.7 PROJECT CONDITIONS

A. Environmental requirements;
1. Comply with federal, state, and local regulations pertaining to solid waste, recycling, chemical waste, sanitary waste, and noise pollution.
2. Perform work in a manner as to minimize the spread of dust and flying particles.
3. No burning will be allowed on-site.

B. Existing conditions:

1. Examine project site and building(s) and compare it with the drawings and specifications. Thoroughly investigate and verify conditions under which the work is to be performed. No allowance will be made for extra work resulting from negligence or failure to be acquainted with all available information concerning conditions necessary to estimate the difficulty or cost of the work.
2. Conduct work so as not to interfere unnecessarily with adjacent buildings, roads, streets, drives, and walks.
   a. Do not close or obstruct streets, alleys, walks, or passageways without permission from authorities having jurisdiction and coordinating same with immediate neighbors whose business operation may be affected.
   b. Safety measures shall be taken to insure an uninterrupted flow of traffic around the site as required by local Police and Fire Departments
3. Storage or sale of removed items on-site is not permitted.
4. It is not expected that hazardous materials will be encountered in the Work.
   a. Hazardous materials will be removed and disposed of by Owner prior to start of the Work.
   b. If suspected hazardous materials are encountered, do not disturb; immediately notify Architect and Owner.
5. Hazardous materials are present in buildings and structures to be selectively demolished. The Owner has prepared a report for the Contractor to review and use.
   a. Hazardous material remediation is specified in Specification Section - HAZARDOUS MATERIAL PROCEDURES.

PART 2 - PRODUCTS

2.1 MATERIALS

A. Furnish all materials, tools, equipment, facilities, and services as required for performing the construction and demolition waste disposal work.

PART 3 - EXECUTION

3.1 EXAMINATION

A. Verification of conditions:
   1. Report unacceptable conditions to the Architect. Do not begin work until unacceptable conditions have been corrected.
   2. Execution of work under this specification section shall constitute acceptance of existing conditions.
   3. Obtain all necessary permits and authorizations by regulatory agencies required to perform the Work under this Section.

3.2 PREPARATION

A. Coordination:

B. Before proceeding, verify plans match existing conditions.

C. Review documents of existing construction provided by Owner against existing conditions.

D. If conflicts are encountered, report it to the Architect. Then prepare recommendation(s) for correction and submit to Architect for review.

E. Coordinate work under this specification section with work specified under other sections.

F. Protection:
1. Property:
a. Provide temporary weather protection to prevent damage to salvage and recycled items.
b. All damage inflicted on public and private property and the property of the Owner shall be repaired or restored to the original condition prior to the start of this Work. All repair or replacement work shall be done at no additional cost to the owner.

3.3 IMPLEMENTATION

A. General:
1. Implement waste management plan as submitted.
2. Provide handling, containers, storage, signage, transportation, and other items as required to implement waste management plan during the entire duration of the contract.
3. Designate and label specific areas on project site necessary for separating materials that are to be salvaged, recycled, reused, and donated.

B. Demolition Waste:
1. Salvaged items for delivery to Owner or other entity:
a. Clean salvaged items.
b. Pack or crate items after cleaning. Identify contents of containers.
c. Store items in a secure area until pick-up or delivery to Owner.
d. Transport item to Owner’s storage area [on-site][off-site][list address].
e. Protect items from damage during transport and storage.
2. Salvaged items for reuse in the work:
a. Clean salvaged items.
b. Store items in a secure and dry area until ready for installation.
3. Recyclable materials:
a. Prepare and maintain recyclable waste materials according to recycling facility requirements.
b. Maintain materials free of dirt, adhesives, solvents, petroleum contamination, and other substances deleterious to the recycling process.
c. Separate recyclable demolition waste from other waste materials. Separate recyclable waste by material type at project site to the maximum extent practical according to approved waste management plan.
d. Separate recyclable demolition waste from other waste materials. All recyclables may be co-mingled into one bin and separated off-site at the appropriate recycling facility.
1) Provide appropriately marked containers or bins for controlling recyclable waste until they are removed from the project site.
2) Include a list of acceptable and unacceptable materials at each container or bin.

3) Inspect containers and bins for contamination and remove contaminated materials if found.
4) Processed materials stockpiled on site shall not be mixed with other materials. Shape stockpiles to drain surface water. Cover stockpiles to prevent windblown dust.
5) Processed material shall be stockpiled away from construction. Do not stockpile within drip line of remaining trees.

e. Remove recyclable demolition waste off project property and transport to recycling receiver or processor.

f. The following list is of common material types which can be recycled. The list of material types is in no way complete but is representative of materials that can be sorted and recycled as per the intent of this specification section.
1) Concrete: Remove reinforcement and other metals from concrete and sort with other metals.
2) Wood: Sort and stack members according to size, type, and length of member.
3) Metals: Separate metal by type. Stack structural steel members according to size and length. Remove bolts, nuts, washers, and other hardware from members.
4) Gypsum Board: Stack large clean pieces on wood pallets in a dry location. Remove edge trim and sort with other metals.
5) Acoustical Ceiling Tile: Stack large clean pieces on wood pallets in a dry location.
6) Metal Suspension System: Separate metal members including trim and other metals from acoustical ceiling tile and sort with other metals.
7) Carpet: Roll large pieces tightly after removing debris, trash, adhesive, and any tack strips. Store carpet in a dry location.
8) Piping: Reduce piping to straight lengths and store by type and size. Separate supports, hangers, valves, sprinklers, and other components by type and size.
9) Conduit: Reduce conduit to straight lengths and store by type and size.

4. Site clearing waste:
a. Excavated top soil and land clearing debris not recycled and reused on-site shall be removed to an off-site recycling location or disposed of at a landfill that accepts inert material.

C. Construction Waste:
1. Recyclable materials:
a. Prepare and maintain recyclable waste materials according to recycling facility requirements.
b. Maintain materials free of dirt, adhesives, solvents, petroleum contamination, and other substances deleterious to the recycling process.
c. Recycle paper and beverage containers used by on-site workers.
d. Separate recyclable construction waste from other waste materials. Separate recyclable waste by material type at project site to the maximum extent practical according to approved waste management plan.
e. Separate recyclable construction waste from other waste materials. All recyclables may be co-mingled into one bin and separated off-site at the appropriate recycling facility.
1) Provide appropriately marked containers or bins for controlling recyclable waste until they are removed from the project site.

2) Include a list of acceptable and unacceptable materials at each container or bin.
3) Inspect containers and bins for contamination and remove contaminated materials if found.

f. Separate recyclable construction waste from other waste materials. All recyclables may be co-mingled into one bin and separated off-site at the appropriate recycling facility.
1) Provide appropriately marked containers or bins for controlling recyclable waste until they are removed from the project site.
2) Include a list of acceptable and unacceptable materials at each container or bin.
3) Inspect containers and bins for contamination and remove contaminated materials if found.

g. Remove recyclable construction waste off project property and transport to recycling receiver or processor.

h. The following list is of common material types which can be recycled. The list of material types is in no way complete but is representative of materials that can be sorted and recycled as per the intent of this specification section.
1) Cardboard Packaging: Breakdown into flat sheets. Bundle and store in a dry place.
2) Polystyrene Packaging: Separate and bag materials.
3) Pallets: As much as possible, require deliveries using pallets to remove pallets from the project site. For pallets that remain on-site, breakdown pallets into component wood pieces and comply with requirements for recycling wood.
4) Crates: Break down crates into component wood pieces and comply with requirements for recycling wood.
5) Wood: Clean cut-Offs of lumber and grind or chip into small pieces.
6) Gypsum Board: Stack large clean pieces on wood pallets in a dry location.

D. Disposal of Waste:
1. Except for items or materials to be salvaged, recycled, or otherwise reused remove and transport waste materials from project site and legally dispose of them in a manner acceptable to authorities having jurisdiction.
2. Do not allow waste material to accumulate on site.
3. Transport waste in a manner that will prevent spillage on adjacent surfaces and areas.

3.4 CLEANING

A. Clean in accordance with Specification Section – PROJECT CLOSEOUT:
1. Immediately clean any soiled surfaces to remain.

END OF SECTION

SECTION 017720 -- PROJECT CLOSEOUT

PART 1 - GENERAL

1.1 SUMMARY

A. This Section includes the following:
   1. Provide all material, labor, equipment and services necessary to completely install all materials, accessories and other related items necessary to complete the Project as indicated by the Contract Documents.
      a. Project Certification procedures.
      b. Final Review & Punch List procedures.
      c. Final Cleaning & Repair of the Work.
      d. Demonstration and Training.

B. Related Sections: The following Project Manual Sections contain requirements that relate to this section:
   1. ALL DIVISION 00 SPECIFICATION SECTIONS.
   2. ALL DIVISION 01 SPECIFICATION SECTIONS.
      a. 01 29 93 Completion of the Work and Closeout Procedures (FUSD)
      b. 01 74 00.02 Cleaning Up (FUSD)
      c. 01 77 00.01 Final Inspection (FUSD)
      d. 01 77 00.02 Cost of Multiple Inspections (FUSD)
      e. 01 78 23 Equipment Manuals (FUSD)
      f. 01 91 00 General Commissioning Requirements (FUSD)
   3. ALL SPECIFICATION SECTIONS IN THE FACILITY CONSTRUCTION SUBGROUP.
   4. ALL SPECIFICATION SECTIONS IN THE FACILITY SERVICES SUBGROUP.
   5. ALL SPECIFICATION SECTIONS IN THE SITE AND INFRASTRUCTURE SUBGROUP.

1.2 SUBMITTALS

A. Submit in accordance with Specification Section - SUBMITTAL PROCEDURES:
   1. Quality Assurance/Control Submittals:
      a. Product Data: For each type of cleaning agent.
      b. Punch List: Initial submittal at Substantial Completion.
      c. Contractor's Request for Final Review form.
      d. Design Data.
         1) All design data as required by the Contract Documents.
      e. Test Reports:
         1) Submit four (4) copies of reports.
         2) Submit four (4) copies of reports required by regulatory requirements.
         3) Submit four (4) copies of ICC Evaluation Service Report.
         4) Submit four (4) copies of Testing Laboratory's report.
         5) All other Test Reports as required by the Contract Documents.
      f. Certificates:
         1) Submit three (3) copies of certificates.

g. Manufacturer's Instructions:
   1) Submit three (3) copies of manufacturer's instructions.
h. Manufacturer's Field Reports:
   1) Submit three (3) copies of manufacturer's field reports.
i. Engineering Calculations:
   1) Submit four (4) copies of engineering calculations computed and signed by a registered Civil or Structural Engineer in the State of California.

2. Closeout Submittals in accordance with Specification Sections in Division One:
   a. Certificates of Release: From authorities having jurisdiction.
   b. Certificate of Insurance: For continuing coverage.
   c. Field Report: For pest control inspection.
   d. Warranty in accordance with Specification Section - WARRANTIES.
3. Operation and Maintenance Material Items:
   a. Schedule of Operation and Maintenance Material Items: For maintenance material submittal items specified in other sections.
4. Project Record Documents:
   a. In accordance with Specification Section - PROJECT DOCUMENTS.
5. Project Certification Documents:
   a. Compile and neatly assemble with indexed and labeled tabs, three (3) sets of the required documents for project certification by the State Agencies. The required documents include, but are not limited to, the following;
      1) Document Required List for Project Certification - Form ORS-6. This document shall be used to organize and index the required documents.
      2) Project Information Forms
         a) Project Site Inspector(s) - Form SSS-5
         b) In-Plant Inspector(s), required for re-locatable buildings only SSS-5.
         c) Contract Information - Form DSA-102
      3) Final Verified Reports from the Architect and Engineers
         a) Architect’s Final Verified Report - Form DSA-6A/E
         b) Structural Engineer's Final Verified Report - Form DSA-6A/E
         c) Mechanical Engineer's Final Verified Report - Form DSA-6A/E
         d) Electrical Engineer's Final Verified Report - Form DSA-6A/E
      4) Final Verified Reports from the Contractor(s) and Inspector(s)
         a) Project Site Inspector(s) Final Verified Report - Form DSA-6
         b) Contractor(s) Final Verified Report - Form DSA-6
         c) In-Plant Inspector(s) Final Verified Report DSA-6.
         d) Special Inspector(s) Final Verified Report - Form DSA-6
      5) Other Final Verified Reports and Affidavits for:
         a) Laboratory - To be signed by Licensed Professional Engineer
         b) Shop Welding and Fabrication - To be signed by AWS/CWI Welding Inspector
         c) Field Welding - To be signed by AWS/CWI Welding Inspector
         d) High Strength Bolt Installation
         e) Glu-Laminated Fabrication
         f) Manufactured Trusses
         g) Masonry Inspection
         h) Engineered Fill - To be signed by the Geotechnical Engineer
         i) Bleacher Fabrication
         j) Other items required by the State Agencies
      6) Notices, Certificates, and Change Orders

a) Notice of Completion - Signed by the Owner, Notarized and recorded with the County Recorders Office.
b) Weighmaster Certificate(s)
c) Automatic Fire Sprinkler System
d) Fire Alarm System Components
e) Fire Standpipe System
f) Fire Suppression System
g) Smoke Ventilation System
h) Skylight System
i) Bleacher System
j) Change Orders - Signed and fully executed.
k) Other documents and/or requirements required by the State Agencies

7) Field Visit Reports, Correction Reports, Punch Lists & Final Review Reports
   a) Field Visit Reports from State Agencies
   b) Field Visit Reports from Architect and Engineers
   c) Inspector's Correction Reports
   d) Contractor Punch Lists
   e) Architect, Engineers and Owner Final Review Reports
   f) A jointly signed and notarized Affidavit from the Contractor and Project Inspector (formerly the Inspector of Record), indicating that any and all items of correction noted in the above documents have been corrected (including Testing Laboratory Reports).

1.3 QUALITY ASSURANCE:

A. Safety, Fire and Environmental Protection, and Insurance standards shall be strictly adhered to in all phases of the construction work. It shall be the responsibility of the Contractor to determine the standards applicable to this project as set forth in all codes, regulations, and ordinances having jurisdiction, and as set forth elsewhere in the Specifications.

B. All specific requirements stipulated in, or required by code references included under all sections of DIVISIONS 02 through 49 inclusive of this specification, and as detailed under Article 3.4 of this Section, shall be required under this Contract.

PART 2 - PRODUCTS

2.1 MATERIALS

A. Cleaning Materials:
   1. Use only those specified materials or types of materials recommended and approved by the manufacturer of the item to be cleaned.

B. Touch-Up Materials:
   1. Use only those materials furnished by or as recommended and approved by the manufacturer of the item to be touched up. Colors and finish characteristics shall exactly match the base material and extra materials, labor, and services required to achieve this result shall be provided by the Contractor(s).

C. Replacement Materials:
   1. Materials that are damaged and not repairable, or materials that are destroyed shall be replaced with equal and identical materials of the same manufacture and shall function in conjunction with the remaining portions of that material. Items no longer manufactured or available shall be replaced with comparable materials as approved by the Architect and at no additional cost to the Owner.
   2. Materials that are required for maintenance replacement by the owner after the guarantee period has expired, or by the contractor during the guarantee period shall exactly match those materials installed as to make, style, color lot, etc., under this contract, and shall be delivered to the owner in marked, identified containers.

D. Extra Materials:
   1. Carefully examine the requirements of the applicable Sections of all DIVISIONS and specifically of DIVISION 09 and deliver the materials required to the Owner.

PART 3 - EXECUTION

3.1 REPAIR AND RESTORATION

A. All damaged items shall be repaired and replaced as directed using proper materials and craftsmen skilled in that particular trade. Materials shall be as follows:
   1. All repair or replacement parts shall be of the same equality and manufacturer as the item being repaired.
   2. All touch-up paint shall be as provided by the item manufacturer for that purpose and shall exactly match the original color and finish.

3.2 SUBSTANTIAL COMPLETION PROCEDURES

A. Contractor's List of Incomplete Items: Prepare and submit a list of items to be completed and corrected (Contractor's punch list), indicating the value of each item on the list and reasons why the Work is incomplete.

B. Submittals Prior to Substantial Completion: Complete the following a minimum of **10** days prior to requesting inspection for determining date of Substantial Completion. List items below that are incomplete at time of request.
   1. Certificates of Release: Obtain and submit releases from authorities having jurisdiction permitting Owner unrestricted use of the Work and access to services and utilities. Include occupancy permits, operating certificates, and similar releases.
   2. Submit closeout submittals specified in other Division 01 Sections, including project record documents, operation and maintenance manuals, damage or settlement surveys, property surveys, and similar final record information.
   3. Submit closeout submittals specified in individual Sections, including specific warranties, workmanship bonds, maintenance service agreements, final certifications, and similar documents.
   4. Submit maintenance material submittals specified in individual Sections, including tools, spare parts, extra materials, and similar items, and deliver to location designated by **Architect**. Label with manufacturer's name and model number.

a. Schedule of Maintenance Material Items: Prepare and submit schedule of maintenance material submittal items, including name and quantity of each item and name and number of related Specification Section. Obtain **Architect's** signature for receipt of submittals.

5. Submit testing, adjusting, and balancing records.
6. Submit sustainable design submittals not previously submitted.
7. Submit changeover information related to Owner's occupancy, use, operation, and maintenance.

C. Procedures Prior to Substantial Completion: Complete the following a minimum of **10** days prior to requesting inspection for determining date of Substantial Completion. List items below that are incomplete at time of request.

1. Advise Owner of pending insurance changeover requirements.
2. Make final changeover of permanent locks and deliver keys to Owner. Advise Owner's personnel of changeover in security provisions.
3. Complete startup and testing of systems and equipment.
4. Perform preventive maintenance on equipment used prior to Substantial Completion.
5. Instruct Owner's personnel in operation, adjustment, and maintenance of products, equipment, and systems. Submit demonstration and training video recordings specified in Section 017900 "Demonstration and Training."
6. Advise Owner of changeover in utility services.
7. Participate with Owner in conducting inspection and walkthrough with local emergency responders.
8. Terminate and remove temporary facilities from Project site, along with mockups, construction tools, and similar elements.
9. Complete final cleaning requirements.
10. Touch up paint and otherwise repair and restore marred exposed finishes to eliminate visual defects.

D. Inspection: Submit a written request for inspection to determine Substantial Completion a minimum of **10** days prior to date the Work will be completed and ready for final inspection and tests. On receipt of request, Architect will either proceed with inspection or notify Contractor of unfulfilled requirements. Architect will prepare the Certificate of Substantial Completion after inspection or will notify Contractor of items, either on Contractor's list or additional items identified by Architect, that must be completed or corrected before certificate will be issued.

1. Request reinspection when the Work identified in previous inspections as incomplete is completed or corrected.
2. Results of completed inspection will form the basis of requirements for final completion.

3.3 FINAL COMPLETION PROCEDURES

A. Submittals Prior to Final Completion: Before requesting final inspection for determining final completion, complete the following:

1. Submit a final Application for Payment according to Specification Section - SCHEDULE OF VALUES.
2. Certified List of Incomplete Items: Submit certified copy of Architect's Substantial Completion inspection list of items to be completed or corrected (punch list), endorsed and dated by Architect. Certified copy of the list shall state that each item has been completed or otherwise resolved for acceptance.

3. Certificate of Insurance: Submit evidence of final, continuing insurance coverage complying with insurance requirements.
4. Submit pest-control final inspection report.
5. Submit final completion photographic documentation.

B. Inspection: Submit a written request for final inspection to determine acceptance a minimum of 10 days prior to date the work will be completed and ready for final inspection and tests.
   1. The Contractor represents that the work has been carefully inspected by the Contractor to determine that the work is complete and in compliance with all requirements set forth.

C. The Architect shall review the initial Contractor's Punch List along with the Owner's Project Inspector, and determine together whether or not the Project is ready for final review. If approved, the Architect or its representative will make the final review on the date and time requested in the Contractor's Request for Final Review form, except under the following conditions:
   1. Upon reviewing a portion of the Project and finding quantities of work incomplete or not in compliance, the review shall cease, and the Architect will notify the Contractor.
   2. If the Contractor has assured the Architect of the completeness and/or accuracy of the work, and the review does not bear this contention out.
   3. The above conditions will be adhered to rigidly to prevent the Architect from being required to act as a supervisory agent of the Contractor by being asked to determine the degree of completion.
      a. When the Contractor requests additional reviews, he shall reimburse the Architect for all time and expense incurred as indicated on the Contractor's Request for Final Review form at the end of this Specification Section.
      b. The Architect is herein defined as any of those firms or individuals listed by references on the drawings, including all consultants identified herein.
      c. All requests for Project Final Review (and re-review) shall be made in writing on the form provided at the end of this Specification Section.
   4. When the Architect does approve of the degree of readiness for the Project based on the initial Contractor's Punch List and the readiness of the Project, the Architect will make his final review, adding to the Contractor's Punch List any other items that require further completion.
   5. The Contractor shall take the initial Contractor's Punch List, together with the Architect's Punch List, and initial and date each item on each list as to when it was completed.
   6. Once both lists are completed and signed by the Project Inspector, the Contractor shall submit to the Architect the completed lists for final review and approval prior to filing for Substantial Completion.

3.4 LIST OF INCOMPLETE ITEMS (PUNCH LIST)

A. Organization of List: Include name and identification of each space and area affected by construction operations for incomplete items and items needing correction including, if necessary, areas disturbed by Contractor that are outside the limits of construction.
   1. Organize list of spaces in sequential order, starting with exterior areas first and proceeding from lowest floor to highest floor.
   2. Organize items applying to each space by major element, including categories for ceiling, individual walls, floors, equipment, and building systems.
   3. Include the following information at the top of each page:
      a. Project name.
      b. Date.

c. Name of Architect.
d. Name of Contractor.
e. Page number.

4. Submit list of incomplete items in the following format:
5. MS Excel electronic file. Architect will return annotated file.
6. PDF electronic file. Architect will return annotated file.
7. Web-based project software upload. Utilize software feature for creating and updating list of incomplete items (punch list).
8. **Three** paper copies. Architect will return **two** copies.

3.5 CLEANING

A. During Construction:

1. Oversee cleaning and ensure that building and grounds are maintained free from accumulations of waste materials and rubbish.
2. Sprinkle dusty debris with water.
3. At reasonable intervals during progress of work, clean up site and access and dispose of waste materials, rubbish, and debris.
4. Provide suitable containers and locate on site for collection of waste materials, rubbish, and debris.
5. Do not allow waste materials, rubbish and debris to accumulate and become an unsightly or hazardous condition.
6. Remove waste materials, rubbish and debris form the site and legally dispose of at public or private dumping areas off the Owner's property.
7. Vacuum clean interior building areas when ready to receive finish painting and continue vacuum cleaning on an as-needed basis until building is ready for acceptance or occupancy.
8. Lower waste materials in a controlled manner with as few handling as possible; do not drop or throw materials from heights.
9. Schedule cleaning operations so that dust and other contaminants resulting from cleaning process will not fall on wet, newly painted surfaces.

B. Final Cleaning:

1. Use experienced professional cleaners for final cleaning.
2. At completion of construction and just prior to acceptance or occupancy, conduct a final review of exposed interior and exterior surfaces.
3. Remove grease, dust, dirt, stains, labels, fingerprints, and other foreign materials from interior and exterior surfaces.
4. Repair, patch, and touch-up marred surfaces to match adjacent finishes.
5. Broom clean paved surfaces; rake clean other surfaces of grounds.
6. Replace air conditioning filters if units were operated during construction.
7. Clean ducts, blowers, and coils if air conditioning units were operated during construction
8. Maintain cleaning until the building, or portion thereof, is accepted by the Owner.

3.6 REPAIR OF THE WORK

A. Complete repair and restoration operations before requesting inspection for determination of Substantial Completion.

B. Repair, or remove and replace, defective construction. Repairing includes replacing defective parts, refinishing damaged surfaces, touching up with matching materials, and properly adjusting operating equipment. Where damaged or worn items cannot be repaired or restored, provide replacements. Remove and replace operating components that cannot be repaired. Restore damaged construction and permanent facilities used during construction to specified condition.
   1. Repair, patch, and touch-up marred surfaces to match adjacent finishes.
   2. Remove and replace chipped, scratched, and broken glass, reflective surfaces, and other damaged transparent materials.
   3. Touch up and otherwise repair and restore marred or exposed finishes and surfaces. Replace finishes and surfaces that that already show evidence of repair or restoration.
      a. Do not paint over "UL" and other required labels and identification, including mechanical and electrical nameplates. Remove paint applied to required labels and identification.
   4. Replace parts subject to operating conditions during construction that may impede operation or reduce longevity.
   5. Replace burned-out bulbs, bulbs noticeably dimmed by hours of use, and defective and noisy starters in fluorescent and mercury vapor fixtures to comply with requirements for new fixtures.

3.7 DEMONSTRATION

A. During Construction and as each piece of equipment is installed, provide the following tests:
   1. Verify that all external service connections have been properly completed, and that piping and/or wiring is properly sized, and contain all necessary safety devices.
   2. Verify that the equipment is free of shipping materials, tie downs, or other internal obstructions.
   3. Conduct tests employing the manufacturer's operating instructions as a sequential guide.
   4. Verify that all portions of the equipment function properly and that the total performance criteria is satisfied.
   5. Make adjustments, replacements, or repairs necessary to achieve full operational capability and repeat tests until performance is achieved and approval obtained.

B. Prior to acceptance, verify that all conditions specified in the Article titled FIELD QUALITY CONTROL, Final Review, have been satisfied and that equipment is ready for continuous use. Provide the following services preparatory to acceptance:
   1. Clean or replace all filters and/or strainers.
   2. Adjust all belts and drive mechanisms.
   3. Lubricate all moving parts as required by manufacturer's operating instructions.
   4. Demonstrate to the Owner's representative and the Architect or Engineer the method and sequence of operation, and provide testing devices and/or data to verify that performance equals that specified.
   5. Provide operating instructions in bound form along with manufacturer's parts list and written warranties.

3.8 SCHEDULES

A. See next page for Request for Final Review from the Contractor(s):

(The rest of this page is left intentionally blank)

CONTRACTOR'S REQUEST
FOR
FINAL REVIEW FORM
PROJECT:_____
(Name of Project and DA Project Number)
TO: DARDEN ARCHITECTS, INC.
6790 N. West Avenue
FRESNO, CA 93711
FROM:_____
(Contractor)

_____
(Address)
_____
WE HEREBY request Final Review on _____ and _____.
(Date) (Time)
WE HEREBY, request and certify:

1. The project is ready for Final Review.
2. The undersigned will compensate the Architect at a rate of $176.00 an hour for further review, investigation and comments if it is determined that the Project is not ready for final review as indicated earlier within this Specification Section. The Architect is herein defined as any of those firms or individuals listed by reference on the Drawings, including all Consultants identified herein.

Submitted By (Contractor)

Signature_____
Firm_____
Address_____
Date_____
Telephone_____

Date_____

Remarks_____

_____

_____

_____

Below is
for Use by Design Consultant only
___ Conditions for Final Review Accepted
___ Final Review Accepted as Noted
___ Final Review Not Accepted
By_____

END OF SECTION

SECTION 017836 -- WARRANTIES

PART 1 - GENERAL

1.1 SUMMARY

A. In addition to providing all other warranties specified in the Project Manual and without affecting any rights of Owner under State or Federal law, Contractor shall warrant that the Work done under this Project Manual will be free from faulty materials or workmanship and hereby agrees, upon receiving notification from the Owner or his Agent, to immediately remedy, repair or replace, without cost to the Owners and to his entire satisfaction, all defects, damages or imperfections appearing in said work within a period of one (1) year unless specified otherwise, after date of final acceptance by the Owner of all work done under this Project Manual, regardless of whether or not the Owner or persons operating under contract with the Owner partially or wholly occupies any portion of the work prior to acceptance. For work performed after completion, the one (1) year period shall be extended by the period of time between the date of final acceptance by Owner and actual performance of the work. This obligation shall survive acceptance of the work and termination of the Contract.

1. Warranties shall be in the form outlined below and shall be submitted in duplicate to the Contractor and submitted on his own letterhead.

B. Related Sections: The following Project Manual Sections contain requirements that relate to this section:

1. ALL DIVISION 00 SPECIFICATION SECTIONS.
2. ALL DIVISION 01 SPECIFICATION SECTIONS.
3. ALL SPECIFICATION SECTIONS IN THE FACILITY CONSTRUCTION SUBGROUP.
4. ALL SPECIFICATION SECTIONS IN THE FACILITY SERVICES SUBGROUP.
5. ALL SPECIFICATION SECTIONS IN THE SITE AND INFRASTRUCTURE SUBGROUP.

1.2 SUBMITTALS

1.3 Warranty Form: (following page.)

A. *(Contractor's Letterhead)*

B. Project Number: _____

C. Project Name: _____

WARRANTY FOR
_____
We hereby warrant and the General Contractor warranties that
_____
_____
_____
has been done in accordance with the Drawings and the Specifications and that the Work as installed will fulfill the requirements of the warranty included in the Project Manual. We agree to repair, replace any or all of our work together with any other adjacent work which may be displaced or damaged by so doing that may prove to be defective in its workmanship or materials within a period of _____ years from date of acceptance of the above-named without any expense to the Owner, ordinary wear and tear and unusual abuse or neglect excepted. In the event of our failure to comply with above-mentioned conditions within ten (10) days after being notified in writing by the Owner or his agent, we collectively or separately, do hereby authorize the Owner to proceed to have said defects repaired and made good at our expense and we will honor and pay the costs and charges therefor upon demand.

_____
(Signature of Subcontractor)

_____
(Signature of Contractor)
Date: _____

D. Submit 2 copies of all manufacturer's or installer/applicator's warranties and bonds as specified within Division 02 –49.

E. Submit to Architect together with Project Record Documents.

F. Accompany submittals with transmittal letter in duplicate.

G. When Product Submittals are required, submit copy of warranty with product submittal.

PART 2 - PRODUCTS
NOT APPLICABLE

PART 3 - EXECUTION
NOT APPLICABLE

END OF SECTION

SECTION 017839 -- PROJECT DOCUMENTS

PART 1 - GENERAL

1.1 RELATED DOCUMENTS

A. Drawings and general provisions of the Contract, including General and Supplementary Conditions and other Division 01 Specification Sections, apply to this Section.

1.2 SUMMARY

A. This Section includes the administrative and procedural requirements for Project Record Documents, including the following:
   1. Project As-Built Drawings.
   2. Project Record Drawings.
   3. Record Specifications.
   4. Record Product Data.

B. Related Requirements: The following Project Manual Sections contain requirements that relate to this Section:
   1. Specification Section 013226- FORMS AND REPORTS
   2. Specification Section 017720- PROJECT CLOSEOUT

1.3 DEFINITIONS

A. CONTRACT DOCUMENTS: Contract Documents include Contract Forms, Project Manual (Contract Requirements and Specifications), Drawings, Addenda, Change Orders and Modification Documents (Supplemental Instructions, Request for Information, Construction Change Directives).

B. PROJECT "AS-BUILT" DOCUMENTS: A set of Contract Documents used during construction for recording of actual construction information during construction. The recording of construction information shall be maintained on the Contract Drawings and in the Project Manual.

C. PROJECT "RECORD" DOCUMENTS: A set of Contract Documents used at the completion of construction for transferring and documenting the actual construction information recorded on the PROJECT "AS-BUILT" DOCUMENTS.

D. RECORD PRODUCT DATA: A set of Submittals and Shop Drawings that have documentation of field changes made after review.

E. AGENCY DOCUMENTATION: Documents required by the Agency Having Jurisdiction to be prepared and submitted by the contractor.

1.4 SUBMITTALS:

A. Submit the following in accordance with specification Section SUBMITTAL PROCEDURES.

B. Format for Submittals:
1. Accompany each submittal with a SHOP DRAWING AND SUBMITTAL TRANSMITTAL:
2. PDF electronic file names shall match the Sheet Numbers of the Contract Documents.
3. Provide labels on DVD's and DVD Cases and include the following:
4. First Line: CLOSE-OUT DOCUMENTS
5. If submittal contains multiple disks append to first line Disk, i.e. (1 of 2)
6. Second Line: Project Name and Year
7. Third Line: Architect Firm Name and Architect's Project Number
8. Fourth Line: DSA or OSHPD Number (if applicable)
9. Fifth Line: Contractor Company Name
10. PDF files for Project "Record" Documents and Record Product Data shall be combined with PROJECT CLOSEOUT, Maintenance Data and Operations Data, and WARRANTIES on a single set of DVD's.

C. PROJECT "AS-BUILT" DOCUMENTS: Comply with the following:
1. Number of Copies: Submit one paper-copy set of marked-up as-built drawings and one paper-copy of marked-up as-built specifications.
2. Clearly Label each copy "PROJECT 'AS BUILT' DOCUMENTS" in two-inch-high printed letters.

D. PROJECT "RECORD" DOCUMENTS: Comply with the following:
1. Number of copies: Submit copies of the Record Documents as follows:
   a. Initial Submittal:
      1) Submit one paper-copy of marked-up record drawings and one paper copy of marked-up record specifications,
      2) Alternatively, submit PDF electronic files of scanned marked-up record drawings and marked-up record specifications on one set of DVD Üs
      3) Architect will indicate whether general scope of changes, additional information recorded, and quality of drafting are acceptable.
2. Final Submittal:
3. Submit one paper-copy of marked-up record drawings, one paper copy of marked-up record specifications, and PDF electronic files of scanned marked-up record drawings and marked-up record specifications on three sets of DVD's.
4. Each record drawing sheet shall be labeled, "PROJECT "RECORD" DOCUMENT.•
5. Print each drawing, whether or not changes and additional information were recorded.
6. Clearly Label each copy "PROJECT "RECORD" DOCUMENTS in two-inch-high printed letters in a prominent location.

E. RECORD PRODUCT DATA: Comply with the following:
1. Number of Copies:
   a. Submit one paper-copy set of marked-up shop drawings.
   b. Submit three DVD's of PDF electronic files of scanned marked-up shop drawings.

F. AGENCY DOCUMENTATION: Comply with the following:

1. Submit Documentation Required by the Agency Having Jurisdiction utilizing the format and system established by the Agency.

1.5 SYSTEM DESCRIPTION

A. The Architect considers the Project Record Documents to be of significant importance to the Owner.

B. Project Record Documents provide important information for the Owner's records, they form an invaluable record for future reference for concealed conditions, facilities management processes, and future additions and renovations.

PART 2 - PRODUCTS

2.1 General:

A. All costs (including the time) required for recording, transferring, and copying all documentation shall be part of the Contractor's Overhead Expense.

B. Provide red pencil or ink (contrasting color) for all marking of the PROJECT "AS-BUILT DOCUMENTS, PROJECT "RECORD" DOCUMENTS, and RECORD PROJECT DATA.

C. Do not permanently conceal any work until required information has been recorded.

2.2 RECORD DRAWINGS

A. PROJECT "AS-BUILT" DOCUMENTS: Maintain one set of marked-up paper copies of the Contract Drawings: and Specifications, incorporating new and revised drawings as modifications are issued.
   1. Preparation: Mark record prints to show the actual installation where installation varies from that shown originally. Require individual or entity who obtained record data, whether individual or entity is Installer, subcontractor, or similar entity, to provide information for preparation of corresponding marked-up record prints.
      a. Give particular attention to information on concealed elements that would be difficult to identify or measure and record later.
      b. Accurately record information in an acceptable drawing technique.
      c. Record data as soon as possible after obtaining it.
      d. Record and check the markup before enclosing concealed installations.
   2. Content: Types of items requiring marking include, but are not limited to, the following:
      a. Elevation for finish grade for all points indicated on Site Grading Plan.
      b. Depths of various elements of foundation in relation to first floor finish elevation.
      c. Horizontal and vertical location of underground utilities and appurtenances referenced to visible and accessible features of structure.
      d. Location of internal utilities and appurtenances concealed in construction referenced to visible and accessible features of structure.
      e. Revisions to routing of piping and conduits.
      f. Revisions to electrical circuitry.
      g. Actual equipment locations.

h. Duct size and routing.
i. Locations of concealed internal utilities Field changes of dimensions and details.
j. Changes made by Addenda, Change Orders and other Modification Documents.
k. Details not on original Contract Documents.
l. Changes made on Shop Drawings.

3. Mark Specifications to indicate the actual product installation where installation varies from that indicated in Specifications, addenda, and contract modifications.
   a. Give particular attention to information on concealed products and installations that cannot be readily identified and recorded later.
   b. Mark copy with the proprietary name and model number of products, materials, and equipment furnished, including substitutions and product options selected.
   c. Record the name of manufacturer, supplier, Installer, and other information necessary to provide a record of selections made.
   d. For each principal product, indicate whether record Product Data has been submitted in operation and maintenance manuals instead of submitted as record Product Data.
   e. Note related Changes Orders, record Product Data, and record Drawings where applicable.
4. Mark the Contract Drawings and Specifications completely and accurately. Use personnel proficient at recording graphic information in production of marked-up record prints.
5. Note Request for Information numbers, Supplemental Instruction numbers, Construction Change Directive numbers, Change Order numbers, and similar identification, where applicable.

2.3 PROJECT "RECORD" DOCUMENTS:

A. General: Transfer all changes, notations, etc. from the "AS-BUILT" PROJECT DOCUMENTS to the "PROJECT RECORD" DOCUMENTS in the same quality as the original Contract Documents.

2.4 RECORD PRODUCT DATA

A. Maintain one set of marked-up paper copies of the Shop Drawings and Product Data, incorporating any modifications to the reviewed documents.

B. Preparation: Mark Product Data to indicate the actual product installation where installation varies from that indicated in Product Data submittal.
   1. Give particular attention to information on concealed products and installations that cannot be readily identified and recorded later.
   2. Include significant changes in the product delivered to Project site and changes in manufacturer's written instructions for installation.
   3. Note related Change Orders and record Drawings where applicable.
   4. Include record Product Data directory organized by Specification Section number and title, electronically linked to each item of record Product Data.

2.5 AGENCY DOCUMENTATION

A. Contractor shall prepare and upload all applicable forms pertaining to the Contractor as required by the Division of State Architect DSA Procedure 13-02, including but not limited to:
   1. DSA 6-C - Contractor Verified Report
   2. NFPA System Record of Completion

PART 3 - EXECUTION

3.1 RECORDING AND MAINTENANCE:

A. Recording:
   1. Keep all documents current, PROJECT "AS-BUILT" DOCUMENTS shall be kept current at all times. Post changes and revisions to project as-built documents as they occur; do not wait until end of Project
   2. The Project Inspector will review the PROJECT "AS-BUILT" DOCUMENTS periodically for the Architect at the time Payment Requests are processed. Should the PROJECT "AS-BUILT DOCUMENTS not be current and up to date, the Owner reserves the right to hold the Payment Request until compliance with the Contract Documents has occurred.

B. Maintenance of Documents:
   1. Maintain at job site the following:
      a. Contract Drawings.
      b. Project Manual/Specifications.
      c. Addenda.
      d. Reviewed shop drawings.
      e. Change Orders.
      f. All Modification Documents.
      g. Field test records.
   2. Store documents in field office apart from documents used for construction.
   3. Provide files and racks for storage of documents.
   4. File documents in accordance with Project Filing Format or Uniform Construction Index.
   5. Maintain documents in clean, dry, legible condition.
   6. Do not use record documents for construction purposes.
   7. Make documents available at all times for inspection by Architect, Owner and Owner's Inspector.

END OF SECTION

SECTION 024302 – PORTABLE BUILDING RELOCATION

PART 1 - GENERAL

1.1 SUMMARY

A. This Section includes the following:
   1. Provide all material, labor, equipment, moving permits, and services necessary to completely relocate Existing Portable Building(s) to a new designated site, along with all other related items necessary to complete the Project as indicated by the Contract Documents.
      a. Owner will provide existing Proof of Ownership upon request.
      b. Building Mover (hereinafter known as the Contractor) shall provide costs for obtaining all AHJ Moving Permits over Public Roads.
      c. Contractor shall prepare the Existing Building at its existing location for transportation over Public Roads to the Building new location.
         1) Disconnect all utilities in such a way as they can be re-established at the new location without major re-wiring.
         2) Remove all external Metal Ramps and dispose.
         3) Structurally reinforce the existing building to make it suitable for transportation over Public Roads in compliance with all applicable AHJ Requirements.
         4) Secure all interior items during the transportation of the Building to its new site so that they are in good working order when re-established in the new location.
      d. Contractor shall properly prepare the existing Building at its new location for set-up and operation.
         1) Place building on new foundation materials per original DSA approval.
         2) Re-connect all utilities to the new site Utility Infrastructure. Test all connections as to utility use so that everything is in proper order.
         3) Remove all temporary shoring or reinforcement during the move.
         4) Repair all damage to the Existing Building during the moving operation, and join all the parts for a fully functioning Building at its new location.
         5) Skirting:
            a) Attach new skirting as directed by the Contract Documents prior to the placement of the Ramp.
         6) Set the existing Building at the proper floor height in the Building's new location to comply with current ADA and State Compliance requirements.
            a) Provide and install new Metal Ramps as required so that they comply with current ADA and State Compliance Requirements.

B. Related Sections: The following Project Manual Sections contain requirements that relate to this section:
   1. ALL DIVISION 00 SPECIFICATION SECTIONS.
   2. ALL DIVISION 01 SPECIFICATION SECTIONS.
   3. 02 41 19 SELECTIVE DEMOLITION
   4. ALL SPECIFICATION SECTIONS IN THE FACILITY SERVICES SUBGROUP.

5. ALL SPECIFICATION SECTIONS IN THE SITE AND INFRASTRUCTURE SUBGROUP.

1.2 SUBMITTALS

A. Submit in accordance with Specification Section - SUBMITTAL PROCEDURES:
   1. Quality Assurance/Control Submittals:
      a. Photo Documentation - One copy for the Architect, Contractor and the Owner:
         1) Provide Date and Time Stamped Photo Documentation with notations prior to starting any work.
      b. Certificates:
         1) Submit three (3) copies of certificates.
            a) Provide copies of all Transportation Permits for moving a structure across Public Roads.

1.3 QUALITY ASSURANCE

A. Qualifications:
   1. Contractor Qualifications:
      a. Engage an experienced Contractor who has successfully completed three (3) projects of similar scope and size to that indicated for this Project.
      b. Has demonstrated that they are aware of all Transportation Permitting for the movement of Buildings across Public Roads.

B. Regulatory Requirements:
   1. In accordance with Specification Section - REGULATORY REQUIREMENTS, and the following:
      a. CARB Materials and equipment used for this Project shall comply with the current applicable regulations of the California Air Resources Board (CARB) and the Environmental Protection Agency (EPA), in the area where the Project is located.

C. Meetings:
   1. Pre-Construction: Schedule prior to the start of work.
      a. Coordinate the work with other work being performed.
      b. Provide a thorough review of the existing Building by way of the Photo Documentation and notations, prior to any work on the Project.
      c. Identify any potential problems, which may impede planned progress of work regarding quality of the re-location of the Building Structure from its existing site to its new location.
   2. Progress: Scheduled by the Contractor during the performance of the work.
      a. Review for proper work progress.
      b. Identify any installation problems and acceptable corrective measures.
      c. Identify any measures to maintain or regain project schedule if necessary.
   3. Completion: Scheduled by the Contractor upon proper completion of the work.
      a. Maintaining installed work until the Notice of Substantial Completion has been executed.

1.4 DELIVERY, STORAGE, AND HANDLING

A. Packing, shipping, handling, and unloading:
1. Items that are not attached to the Building (but required in the Building at its new location) shall be packed and handled in such a manner as to assure that they are free from dents, scratches and other damage.
2. Prepare the existing Building for transportation, splitting it into sections if required, to meet transportation requirements across Public Roads, and reinforcing the structure in such a way as to handle moving the Building the distance required for this Project.
3. Protect the Building from debris and wind during the movement of the building from the existing site to the new site for this Project.

B. Acceptance at Site:
1. Items that are not attached to the Building must be in Contractor's containers identifying the item and location in the Building.
2. Damaged products will not be accepted.

C. Storage and protection:
1. Items that are not fixed to the Building shall be stored above ground on level platforms, six (6) inches above ground, allowing air circulation under stacked units, until they can be moved into the Building where they came from.
   a. Cover materials with protective waterproof covering providing for adequate air circulation and ventilation.

1.5 PROJECT CONDITIONS

A. Environmental requirements:
1. Dust control: Perform work in a manner as to minimize the spread of dust and flying particles.
2. Burning: No burning will be allowed on-site.
3. Rain: The work under this section shall not be started or maintained under threat of rain unless the work is not affected by the rain.

B. Existing Conditions:
1. Examine existing and new site and compare it with the drawings and specifications. Thoroughly investigate and verify conditions under which the work is to be performed. No allowance will be made for extra work resulting from negligence or failure to be acquainted with all available information concerning conditions necessary to estimate the difficulty or cost of the work.

1.6 Conduct work so as not to interfere unnecessarily with adjacent roads, streets, drives and walks.WARRANTY

A. Contractor's General Warranty:
1. In accordance with Specification Section - WARRANTIES.

B. Manufacturer's Warranty:
1. In accordance with manufacturer's written standard warranty:

a. Metal Ramps One (1) Year.

C. Installer's Warranty:
1. In accordance with the terms of the specification section - WARRANTIES, but the period of time shall be for Five (5) years.

PART 2 - PRODUCTS

2.1 MANUFACTURERS

A. Products specified are from companies listed below, or approved equivalent. These products listed herein establish the size, pattern, color range and function selected by the Architect for this Project. Manufacturers that are listed as acceptable alternative manufacturers must still comply with the requirements of the products listed in order to be approved as an equivalent during the Submittal Process. If the acceptable alternative manufacturers listed are not approved during the Submittal Process due to non-compliance with the contract documents, then the Contractor shall submit product specified.
1. Specified product manufacturer:
a. TMP SERVICER METAL RAMP.

B. Products from other manufacturers not listed must submit in accordance with Specification Section - SUBSTITUTION PROCEDURES.

2.2 MANUFACTURED UNITS

A. Metal Ramp:
1. Provide Metal ramp constructed of all galvanized steel construction using steel tubes for the support structure and Handrails, and steel plates for the ramp surface.
a. Provide plywood skirting for the Metal Ramp to match the adjacent skirting on the Portable Building.

PART 3 - EXECUTION

3.1 EXAMINATION

A. Site verification of conditions:
1. Prior to the execution of the work under this specification section, inspect the existing site and new site regarding the work executed under other sections of this Project Manual which, affect the execution of work under this specification section.
a. Take pictures, dated and time stamped, of the exterior and the interior and provide copies to the Owner prior to doing any work.
b. Verify all utility connections, Telephone, PA, FA systems, and any Data Infrastructure is in good operating order prior to any Utility disconnect is made before the moving of the structure.
1) Provide notation of any issues regarding the utilities on the Photo Documentation.

2. Report unacceptable conditions to the Architect. Do not begin work until unacceptable conditions have been corrected.
    a. Utilize the pictures taken to note any conditions present that need repairing due to existing conditions and not due to transportation issues prior to doing any work.
3. Execution of work under this specification section shall constitute acceptance of existing conditions.

3.2 PREPARATION

A. Coordination:
1. Coordinate work under this specification section with work specified under other sections to ensure proper and adequate interface of work at the existing site and the new site.

B. Protection:
1. Protect all adjacent areas and surfaces at the existing site and the new site from drips, spray, air pollution of surrounding environment, and other damage from work under this specification section.
2. Take all necessary measures to ensure that there is no damage to the Owner's grounds and sod areas, caused by the movement of the portable building(s), transportation of the Building(s), and the Contractor's equipment.
    a. This applies on all sites, both existing and new locations for the Building(s).
3. Contractor shall, repair at its own cost, all damage to Telephone, PA, FA, and Data systems not part of the scope of this work, resulting from work done under this contract.

C. Surface preparation:
1. Prepare existing site in accordance with Contract Documents, for the proper preparation of the Building for moving and transportation to the new site location.
    a. Provide temporary barricades as required during the preparation of the Building for moving for keeping unauthorized traffic from the existing site.
        1) Maintain until all work at the existing site is ready for the Owner to re-occupy.
        2) Remove all temporary barricades at the conclusion of all work.
    b. Make the Building ready for transportation:
        1) Remove all skirting.
            a) Remove from site, and legally dispose of the remains.
        2) Provide temporary jacks until the Building is ready for transport, remove all foundation skids, and legally dispose of the remains.
2. Prepare new site in accordance with Contract Documents.
    a. Verify that all underground sprinklers have been re-routed at the new site location so as not to impede the erection and set-up of the Building.
    b. Verify that all earthwork, pavement, and concrete work, have been properly prepared for the setting of the Building in its new location.
        1) Notify the Architect if site is not ready.
    c. Verify that all utility infrastructures have been prepared for servicing the Building at its new location, and is ready for hook-up.
    d. Provide temporary barricades at the new site during the set-up of the Building for keeping unauthorized traffic from the new site until it is ready for turn over to the Owner for its use.
    e. Provide new foundation supports and level at the new site.
    f. Provide new foundation supports for the skirting.

g. Clean existing Building substrates once the Building has been re-located at the new site of substances (oil, grease, rolling compounds, incompatible primers, loose mill scale, etc.) which could impair bond of paint materials that may be required in other sections.

3.3 ERECTION

A. General:
1. Once the Building is at the new site, set-up the Building into its new location in accordance with the Contract Documents.
2. In accordance with Regulatory Requirements and the Contract Documents.
3. Set plumb, level, and square. Comply with all ADA and State Accessibility Requirements.
4. Install new accessible Metal Ramps.

B. Layout:
1. Lines shall be straight and true.

3.4 REPAIR / RESTORATION

A. Repair the Building in its new location:
1. Repair all exterior materials damaged during the move, and make weather tight and ready for re-painting, including, but not limited to, the following:
   a. Repair all gutters and downspouts.
   b. Repair any glass and screens.
   c. Repair any doors or weatherstripping. Bottom of door sweep shall contact threshold.
   d. Repair any trim or flashing.
   e. Repair any Mechanical and Electrical items.
2. Repair all interior materials damaged during the move.

B. Restore the Building in its new location:
1. Re-seal all exterior joints, interior joints, and cracks where adjoin materials meet as required and make ready for new paint.
2. Seal all pipe penetrations. Provide new escutcheons for joints wider than 1/4 inch.
3. Re-paint all exterior materials and make ready for new occupancy.

3.5 RE-INSTALLATION

A. General:
1. Once the Building is at the new site, install all items not attached into the Building at its new location in accordance with the Contract Documents.
2. All new and re-used skirting shall be scribed to follow the grade upon which the building sits.
3. In accordance with Regulatory Requirements and the Contract Documents.
4. Set plumb, level, and square. Comply with all ADA and State Accessibility Requirements.

B. Layout:

1. Lines shall be straight and true.

3.6 FIELD QUALITY CONTROL

A. Site Tests:
   1. As required by Regulatory Requirements.

B. Inspection:
   1. As required by Regulatory Requirements.
   2. Schedule inspections and notify the Architect, Project Inspector and any other regulatory agencies of the time at least 48 hours prior to the inspection.
   3. No work shall be without the inspections required by Regulatory Requirements.

3.7 ADJUSTING

A. Test and adjust controls and safeties. Replace damaged or malfunctioning controls and equipment.

3.8 CLEANING

A. Clean in accordance with Specification Section – PROJECT CLOSEOUT.
   1. Leave area level and free of any ruts or debris. Appearance of earth surface shall be equal to or better than adjacent undisturbed surfaces.
   2. Clean any soiled surfaces immediately.
      a. Clean all Interior surfaces once the Building is set in its new location and ready for occupancy.
   3. Remove any protruding fasteners and patch areas affected.
   4. Finish shall be clean and ready for the application of any additional finishes as indicated by the Contract Documents.

END OF SECTION

SECTION 024919 - SELECTIVE DEMOLITION

PART 1 - GENERAL

1.1 SUMMARY

A. This section includes the following:
   1. Section includes requirements governing execution of the work including, but not limited to, the following:
      a. Demolition and removal of selected site elements.
      b. Salvage of existing items to be reused or recycled.

B. Related Sections: The following Project Manuel Sections contain requirements that relate to this section:
   1. ALL DIVISION 00 SPECIFICATION SECTIONS
   2. ALL DIVISION 01 SPECIFICATION SECTIONS
   3. ALL SPECIFICATION SECTIONS IN THE FACILITY SERVICES SUBGROUP

1.2 REFERENCES

A. Standards:

B. In accordance with the latest edition of the following standards:
   1. ANSI A10.6 American National Standards Institute

1.3 DEFINITIONS

A. Remove: Detach items from existing site or building(s) and legally dispose or recycle off-site.

B. Remove and Salvage to Owner: Carefully detach from existing site or building(s), in a manner to prevent damage, and deliver to Owner.

C. Remove and Reinstall: Detach items from existing site or building(s), prepare for reuse, and reinstall where indicated.

D. Existing to Remain: Existing item(s) within project site that are not to be permanently removed and that are not otherwise indicated to be removed, removed and salvaged, or removed and reinstalled.

1.4 SUBMITTALS

A. Submit in accordance with Specification Section - SUBMITTAL PROCEDURES:
   1. Closeout Submittals:
      a. Existing Warranties
      b. Pre-demolition Photographs

1.5 QUALITY ASSURANCE

A. Regulatory Requirements:
   1. In accordance with Specification Section - REGULATORY REQUIREMENTS and the following:
      a. CARB Materials and equipment used for this project shall comply with the current applicable regulations of the California Air Resources Board and the Environmental Protection Agency (EPA), in the area where the project is located.
      b. CAL/OSHA California Division of Occupational Safety and Health Administration.
      c. CK County of Kings, codes and ordinances
      d. EPA Environmental Protection Agency

B. Meetings:
   1. Pre- Demolition……Schedule prior to the start of work.
      a. Coordinate the work with other work being performed.
      b. Review requirements of work performed by others that rely on substrates exposed by selective demolition work.
      c. Identify any potential problems, which may impede planned progress and proper demolition of work.
      d. Review areas where existing construction is to remain and requires protection.
      e. Review demolition waste disposal and material recycling procedures.
   2. Progress:……Scheduled by the Contactor during the performance of the work.
      a. Review for proper work progress.
      b. Identify any problems and acceptable corrective measures.
      c. Identify any measures to maintain or regain project schedule if necessary.
   3. Completion:……Scheduled by the Contactor upon proper completion of the work.
      a. Inspect and identify any problems.
      b. Establish method and procedures to maintain protections while progressing to project completion.

1.6 DELIVERY, STORAGE, AND HANDLING

A. Cleaning, handling, and packing:
   1. Salvaged Items and Reinstalled Items shall be handled in such a manner as to assure that they are free from damage.
   2. Salvaged Items shall be cleaned and packed or cleaned and palleted.
   3. Reinstalled Items shall be cleaned.

B. Storage and protection
   1. Salvaged Items and Reinstalled Items shall be stored in a dry, protected area.
   2. Salvaged Items and Reinstalled Items shall be stored above ground on level platforms, six (6) inches above ground, allowing air circulation underneath.
   3. Cover with protective waterproof covering providing for adequate air circulation and ventilation.

C. Waste Management and Disposal:
   1. Disposal of all selective demolition items shall be per Specification Section - CONSTRUCTION WASTE MANAGEMENT AND DISPOSAL.

1.7 PROJECT CONDITIONS

A. Environmental requirements:
   1. Dust control - perform site, exterior, and interior work in a manner as to minimize the spread of dust and flying particles.
      a. Thoroughly moisten appropriate surfaces as required to prevent dust from being a nuisance to the occupants, public, and neighbors.
   2. Noise control - perform work in a manner as to minimize construction noise.
      a. When a certain level of noise is unavoidable and is objectionable to the occupants of the adjacent spaces, buildings, or premises, coordinate with Owner and make arrangements to perform such work at the most appropriate time periods of the day.

B. Existing conditions:
   1. Examine project site and building(s) and compare it with the drawings and specifications. Thoroughly investigate and verify conditions under which the work is to be performed. No allowance will be made for extra work resulting from negligence or failure to be acquainted with all available information concerning conditions necessary to estimate the difficulty or cost of the work.
   2. Conduct work so as not to interfere unnecessarily with adjacent buildings, roads, streets, drives, and walks.
      a. Do not close or obstruct streets, alleys, walks, or passageways without permission from authorities having jurisdiction and coordinating same with immediate neighbors whose business operation may be affected.
      b. Safety measures shall be taken to insure an uninterrupted flow of traffic around the site as required by local Police and Fire Departments
   3. Maintain existing utilities indicated to remain in service and protect against damage during selective demolition work.
      a. Maintain fire-protection facilities in service during the work.
   4. Demolition waste becomes the property of the Contractor.
   5. Storage or sale of removed items on-site is not permitted.
   6. It is not expected that hazardous materials will be encountered in the Work.
      a. If suspected hazardous materials are encountered, do not disturb; immediately notify Architect and Owner.

PART 2 - PRODUCTS

2.1 MATERIALS

A. Furnish all materials, tools, equipment, facilities, and services as required for performing the selective demolition and removal work.

PART 3 - EXECUTION

3.1 EXAMINATION

A. Verification of conditions:

1. Report unacceptable conditions to the Architect. Do not begin work until unacceptable conditions have been corrected.
2. Execution of work under this specification section shall constitute acceptance of existing conditions.
3. Obtain all necessary permits and authorizations by regulatory agencies required to perform the Work under this Section.
4. Verify that utilities have been disconnected and capped before starting selective demolition operations.
5. Record existing conditions by use of Pre-demolition Photographs.
    a. Inventory and record the condition of items to be salvaged and/or re-installed.

3.2 PREPARATION

A. Coordination:
1. Before proceeding, verify plans match existing conditions.
2. Review documents of existing construction provided by Owner against existing conditions.
3. If conflicts are encountered, report it to the Architect. Then prepare recommendation(s) for correction and submit to Architect for review.
4. Coordinate work under this specification section with work specified under other sections.
5. Coordinate any utility and HVAC unit shut-down with owner 48 hours in advance of the anticipated shut-down.
    a. Do not interrupt utilities and HVAC units serving occupied or used facilities, except when authorized in writing by the Owner.
    b. Provide temporary service during interruptions to existing facilities, as may be required by the Owner to maintain essential services.
6. Prior to site selective demolition, review status of trees and shrubs with Architect and Owner. The Owner may wish to relocate trees or shrubs outside the limits of construction.

B. Protection:
1. Structure and Property:
    a. Provide temporary barricades and other protection required to prevent injury to people and damage to adjacent buildings, landscape, and facilities to remain.
    b. All damage inflicted on public and private property and the property of the Owner shall be repaired or restored to the original condition prior to the start of this Work. All repair or replacement work shall be done at no additional cost to the owner.
    c. Provide protection to ensure safe passage of people around selective demolition area and to and from occupied portions of building and site.
    d. Provide temporary weather protection, during interval between selective demolition of existing construction on exterior surfaces and new construction, to prevent water leakage and other weather damage to building envelope, structure, and interior areas.
    e. Protect walls, ceilings, floors, and other existing finish work that are to remain or that are exposed during selective demolition operations.
    f. Protect and maintain utility services and mechanical/electrical systems to remain.
    g. Cover and protect furniture, furnishings, and equipment that have not been removed.

3.3 APPLICATION

A. General:
1. Selective demolition shall include the removal of all components of the existing building and/or site described in the documents to be removed. Unless otherwise specified, the component identified for removal shall include all materials, accessories and fabrications associated with that component.
2. Neatly cut openings and holes plumb, square, and true to dimensions required. Use cutting methods least likely to damage construction to remain or adjoining construction.
   a. Temporarily cover opening to remain.
   b. Use hand tools or small power tools designed for sawing or grinding, not hammering and chopping, to minimize disturbance of adjacent surfaces.
3. Cut or drill from the exposed or finished side into concealed surfaces to avoid marring existing finished surfaces.
4. Locate, identify, disconnect, and seal or cap off indicated utility services and mechanical/electrical systems.
5. Demolished items and materials that are recyclable or slated for disposal shall be promptly dealt with per Specification Section - CONSTRUCTION WASTE MANAGEMENT AND DISPOSAL.
6. Removed and Salvaged items:
   a. Clean salvaged items.
   b. Pack or crate items after cleaning. Identify contents of containers.
   c. Store items in a secure area until delivery to Owner.
   d. Transport item to Owner's storage area on-site.
   e. Protect items from damage during transport and storage.
7. Removed and Reinstalled items:
   a. Clean and repair items to functional condition adequate for intended reuse.
   b. Pack or crate items after cleaning and repairing. Identify contents of containers.
   c. Protect items from damage during transport and storage.
   d. Reinstall items in locations indicated. Comply with installation requirements for new materials and equipment. Provide connections, supports, and miscellaneous materials necessary to make item functional for use indicated.
8. Existing Items to Remain:
   a. Protect construction indicated to remain against damage and soiling during selective demolition.

B. Site Selective Demolition:
1. Utility lines to be abandoned within the construction area shall be removed and stubbed off outside the limits of construction.
2. Maintain existing storm drainage system to remain in functioning condition. Prevent debris form entering or blocking drains and piping. Use drain plugs specifically for this purpose. Remove drain plugs at the end of each work day.
3. Refer to drawings for trees and shrubs to be removed. Protect certain trees as indicated.
   a. Remove tops, trunks, and roots of trees and shrubs to a minimum depth of 3 feet or to a depth required to remove all roots 1/4 inch diameter and larger.
   b. Chip removed trees, shrubs, and roots.
      1) Removed chipped material to recycling station.
4. Remove debris, concrete, asphalt, and any other obstruction to the extent indicated.
5. Remove all:
   a. Buried objects which will interfere with the Work.

b. Irrigation lines, irrigation risers, and irrigation valves.

6. At building pads, site improvements, or trenching, strip topsoil which contains:
   a. Grass, weeds, and natural vegetation to a minimum depth of [4] inches.
   b. Stumps and roots 1/4 inch and larger.
7. Remove non-soil materials from topsoil, including clay lumps, gravel, trash, debris, weeds, roots, other waste materials, and objects more than 1/2 inch in diameter.
8. Stockpile reusable topsoil away from excavation and where work is to proceed.
   a. Do not stockpile topsoil within drip line of remaining trees.
9. Non-soil materials removed from topsoil shall be separated into like materials and recycled either within the project or removed from the project site to a recycling station.
   a. Those waste materials that are non-recyclable shall be legally disposed off of the project site.

3.4 CLEANING

A. Clean in accordance with Specification Section - PROJECT CLOSEOUT:
   1. Clean any soiled surfaces to remain immediately.
   2. Existing substrates shall be clean and ready for the installation of any additional materials.
   3. Leave site areas level and free of any ruts or debris. Appearance of earth surface shall be equal to or better than adjacent undisturbed surfaces.

END OF SECTION

SECTION 031101 – CONCRETE FORMWORK

PART 1 - GENERAL

1.1 SUMMARY

A. This Section includes the following:
   1. Provide all material, labor, equipment and services necessary to completely install all Concrete Formwork materials, and other related items necessary to complete the Project as indicated by the Contract Documents.

B. Related Sections: The following Project Manual Sections contain requirements that relate to this section:
   1. ALL DIVISION 00 SPECIFICATION SECTIONS.
   2. ALL DIVISION 01 SPECIFICATION SECTIONS.
   3. 03 20 00 REINFORCEMENT
   4. 03 30 00 CAST-IN-PLACE CONCRETE
   5. 05 12 00 STEEL AND FABRICATIONS
   6. 06 10 00 ROUGH CARPENTRY
   7. 31 20 00 EARTHWORK
   8. ALL SPECIFICATION SECTIONS IN THE FACILITY SERVICES SUBGROUP.
   9. ALL SPECIFICATION SECTIONS IN THE SITE AND INFRASTRUCTURE SUBGROUP.

1.2 REFERENCES

A. Standards:
   1. In accordance with the latest edition of the following standards:
      a. ACI American Concrete Institute
      b. APA The Engineered Wood Association (formerly the American Plywood Association)
      c. PS Product Standards of the U.S. Department of Commerce
      d. WCLIB West Coast Lumber Inspection Bureau

1.3 DEFINITIONS

A. Terms used throughout this section.
   1. Unexposed:
      a. "Unexposed to View" for determining what forms to use for an unfinished concrete surface.
   2. Exposed:
      a. "Exposed to View" for determining what forms to use for a finished concrete surface.

1.4 SUBMITTALS

A. Submit in accordance with Specification Section - SUBMITTAL PROCEDURES:
   1. Product Data.
      a. Forming materials.
      b. Formwork for exposed concrete.
      c. Form coatings and release agents.
   2. Shop Drawings.
   3. Samples.
      a. Form liners for specific finished concrete surfaces.
   4. Quality Assurance/Control Submittals:
      a. Manufacturer's written Instructions:
         1) Instructions for specific form liner manufacturer indicated.
   5. Closeout Submittals:
      a. Record Documents in accordance with Specification Section – PROJECT DOCUMENTS.

1.5 QUALITY ASSURANCE

A. Qualifications:
   1. Installer Qualifications:
      a. Engage an experienced Installer who has successfully completed three (3) projects of similar scope and size to that indicated for this Project.
   2. Manufacturer/Supplier Qualifications:
      a. Firm experienced in successfully producing/supplying products similar to that indicated for this Project, with sufficient production/supply capacity to produce/supply required units without causing delay in the Work.

B. Regulatory Requirements:
   1. In accordance with Specification Section - REGULATORY REQUIREMENTS, and the following:
      a. CARB Materials and equipment used for this Project shall comply with the current applicable regulations of the California Air Resources Board (CARB)and the Environmental Protection Agency (EPA), in the area where the project is located.

PART 2 - PRODUCTS

2.1 MANUFACTURERS

A. Products specified are from companies listed below. These products listed herein establish the size, pattern, color range and function selected by the Architect for this Project. Manufacturers listed as acceptable alternative manufacturers must still comply with the requirements of the products listed in order to be approved as an equivalent during the Submittal Process. If the acceptable manufacturers listed are not approved during the Submittal Process due to non-compliance with the contract documents, then the Contractor shall submit product specified:

1. Specified product manufacturer, or approved equivalent:
   a. MDO Plywood SIMPSON TIMBER PRODUCTS.
   b. HDO Plywood SIMPSON TIMBER PRODUCTS.
2. Specified product accessories, or approved equivalent:
   a. Chamfer Strips MEADOW / BURKE COMPANY.
   b. Double Sided Foam Tape 3M COMPANY.
   c. Spreaders and Ties MEADOW / BURKE COMPANY.

B. Products from other manufacturers not listed must submit in accordance with Specification Section - SUBSTITUTION PROCEDURES.

2.2 MATERIALS

A. Unexposed finish forms:
1. Provide plywood, lumber, or another acceptable material.
   a. Lumber shall be dressed on at least two edges and one side for tight fit, complying with WCLIB Standard Grading and Dressing Rules #17, for Douglas Fir Form Lumber.
   b. When plywood is used, provide panels complying with PS1-83, B-B (Concrete Form) Plywood, Group 1, EXT-APA mill-oiled and edge-sealed, with each piece bearing legible inspection trademark.

B. Exposed finish forms:
1. Provide plywood panel type materials to provide continuous, straight, smooth, exposed surfaces. Furnish in largest practical sizes to minimize number of joints and to conform to joint system shown on the drawings.
   a. Single Pour Forms: Provide liner panels that are complying with PS1-83, MDO Plywood, B-B, Group 1, EXT-APA, mill-oiled, edge-sealed, with each piece bearing legible inspection trademark, which are limited to "single-pour use" forms, that are manufactured by SIMPSON TIMBER PRODUCTS, or approved equivalent.
   b. Multiple Pour Forms: Provide HDO Plywood "Multipour" liner panels, which are limited to "double-pour use" forms, that are manufactured by SIMPSON TIMBER PRODUCTS, or approved equivalent.

2.3 ACCESSORIES

A. Chamfer Strips:
1. Provide wood chamfer strips free of knots, for forming edges of cast-in-place concrete.

B. Double Sided Foam Tape: Provide "Scotch" double sided, high density, pressure sensitive adhesive, foam tape as manufactured by The Tape Divison of 3M PRODUCTS, INC., or approved equivalent.

C. Form release agent:
1. Provide commercial formulation form release agent with a maximum volatile organic compounds (VOC's) in compliance with the CARB in the area where the project is located, that will not bond with, stain, or adversely affect concrete surfaces and will not impair subsequent treatments of concrete surfaces.

2. Provide form liner manufacturer's form release agent when a particular form liner is used to maintain compatibility with form release agent and the form liners used for this project.

D. Spreaders and ties for loose plywood forming:
1. Spreader Ties: Use metal spreaders and ties for surfaces to be sacked. Use type that will give positive tying and accurate spreading for accurate sizing of cast walls or forms. Snap type shall leave no metal closer than 1-1/2 inches from exposed surface of concrete and have spreader cones no larger than 1 inch diameter.

PART 3 - EXECUTION

3.1 PREPARATION

A. Surface preparation:
1. Consult with other Trades relative to required openings, and items to be imbedded in concrete (i.e., piping, conduit, hangers, reglets, anchors, inserts, sleeves, etc.). Coordinate work specified under other sections to ensure proper, adequate interfacing between trades, for openings, chases, blockouts, and other required interfacing items.

3.2 ERECTION

A. All formwork shall be:
1. Designed and constructed in accordance with ACI Standard 347 "Recommended Practice for Concrete Formwork".
   a. Follow ACI 303R-91 "Guide to Cast-In-Place Architectural Concrete" for further recommendations in design and use of Patterned Form Liners.
2. Construct to size, shape, alignment, elevation and position of all concrete elements.
   a. Provide for openings, offsets, sinkages, keyways, recesses, moldings, rustications, reglets, chamfers, blocking, screeds, bulkheads, anchorages, inserts, and other features required in the work. Use selected materials to obtain required finishes.
3. Properly separate and securely tie with Spreaders and Ties to maintain proper shape. Wood spreaders shall not be allowed to remain in concrete work.
   a. Use "Penta-Ties" where indicated on the drawings. Glue in cement compound plugs.
4. Brace, support and center sufficiently to carry without excessive deflection all live and dead loads imposed during construction and placement of concrete, and to insure safety to workers and passersby.
   a. Block adjoining permanent pan units left in place to prevent lateral deflection of forms while placing concrete.
5. Properly construct to eliminate all open joints or discontinuous surfaces.
   a. Solidly butt joints with double sided foam tape, apply silicone sealant at concrete face, and provide backup at joints to prevent cement paste or mortar from leaking.

B. All joints shall be:
1. Uniform and backed by 2 inch material.
2. Continuous and level or plumb.
3. Sufficiently tight (with double sided foam tape and silicone sealant) to prevent leakage of cement paste.

a. Locate joints of formwork whenever possible at rustication joints.

4. Subject to Architect's approval.

3.3 INSTALLATION

A. General: Design, engineer, erect, support, brace, and maintain formwork to support vertical, lateral, static, and dynamic loads that might be applied until concrete structure can support such loads. Construct formwork so concrete members and structures are of correct size, shape, alignment, elevation, and position.

1. Access Openings: Shall be provided in forms for cleaning and inspection of forms and reinforcement.
   a. In Wall Forms: Provide openings for each pour, composed of a form section held out until inside of each formed cavity has been cleaned, so that no "access hole" is visible in the finished concrete surface.
2. Architectural Concrete elements shall be formed with MDO (or HDO) form plywood where face uniformity is required such as on signs, plaques, kiosks, and landscape elements.
3. Side forms at unexposed footings may be omitted if excavation stands without caving.
   a. Make footing trench two (2) inches wider than width of concrete footing indicated on the drawings, when earth is used as a form.
   b. Cut trenches true and straight.
   c. Make side cuts neat and plumb.
   d. Bottom of trenches shall be level with reasonably sharp corners.
4. Formwork above grade (curbs, exposed faces of concrete foundations, etc.) shall be:
   a. Plywood type as specified treated with Sealer.
   b. Constructed with plumb and level joints.
   c. Separated with removable or snap type Spreaders and Ties. Do not use wire ties.
5. Unintentional indentations in the surface of the concrete left after removal of spreaders and ties shall be filled and sacked unless the architect's approval is given to do otherwise.
6. Sleeves, anchors and bolts, angles, supports, ties and other materials in connection with concrete construction shall be secured in position before the concrete is placed.

3.4 CONSTRUCTION

A. Special Techniques – Form Removal and Reuse of Forms:

1. All forms shall be completely removed.
2. Time of Removal shall be in accordance with ACI 301which, requires concrete to reach its specified compressive strength. Variations to the time of removal are listed below subject to the concrete reaching its specified compressive strength:
   a. Dependent on weather conditions.
      1) Due to excessive cold weather for a long duration of days, and subject to the Architect's approval, the time for removal may be extended if deemed necessary.
   b. Dependent on cylinder test results.
   c. Dependent on recommendations of additive manufacturer when additives are admitted to the mix.
   d. Typically (verify with three statements above before initiating the following):
      1) Foundation Side Forms: Five (5) days after concrete is poured.
   e. Remove forms in a manner, which will not harm concrete. Do not hammer or pry against concrete.

3. Nails, tie wires and form ties shall be cut off flush with face of concrete.
4. Snap type spreaders to be snapped off inside the wall surface.
5. Clean and repair surfaces of forms to be reused in the work. Split, frayed, delaminated, or otherwise damaged form-facing material will not be acceptable for exposed surfaces. Apply new form-release compound as specified for new formwork.
6. When forms are extended for successive concrete placement, thoroughly clean surfaces, remove fins and laitance, and tighten forms to close joints. Align and secure joint to avoid offsets. Do not use patched forms for exposed concrete surfaces except as acceptable to the Architect.

B. Site Tolerances:
1. Maintain formwork construction tolerances and surface irregularities complying with the following ACI 347 limits:
   a. Provide Class A tolerances (permitted irregularities are 1/8" in 10' for both gradual and abrupt) for all concrete surfaces exposed to view, or surfaces that will receive additional applied finishes.
2. Concrete work out of alignment, or level or plumb exceeding the allowable tolerance will be cause for rejection of the whole work affected. Such work shall be removed and replaced as directed by Architect with no additional cost to Owner.

3.5 CLEANING

A. Thoroughly clean forms and adjacent surfaces to receive concrete. Remove chips, wood, sawdust, dirt, or other debris just before placing concrete. Retighten forms and bracing before placing concrete, as required, to prevent leakage of cement paste and maintain alignment.

B. Remove all wood used for formwork from trenches. No wood shall be left buried in the earth.

C. Final cleaning shall be in accordance with Specification Section – PROJECT CLOSEOUT.

END OF SECTION

SECTION 032000 – REINFORCEMENT

PART 1 - GENERAL

1.1 SUMMARY

A. This Section includes the following:
   1. Provide all reinforcement material, labor, equipment and services necessary to completely install all reinforcing materials, accessories and other related items necessary to complete the Project as indicated by the Contract Documents.

B. Related Sections: The following Sections contain requirements that relate to this Section:
   1. ALL DIVISION 00 SPECIFICATION SECTIONS.
   2. ALL DIVISION 01 SPECIFICATION SECTIONS.
   3. 03 11 01 CONCRETE FORMWORK
   4. 03 30 00 CAST-IN-PLACE CONCRETE
   5. 31 20 00 EARTHWORK
   6. ALL SPECIFICATION SECTIONS IN THE FACILITY SERVICES SUBGROUP.
   7. ALL SPECIFICATION SECTIONS IN THE SITE AND INFRASTRUCTURE SUBGROUP.

1.2 REFERENCES

A. The following References and Manufacturer's Standards shall apply to this Specification Section:
   1. ACI American Concrete Institute
   2. ASTM American Society for Testing and Materials
   3. AWS American Welding Society
   4. CRSI Concrete Reinforcing Steel Institute

1.3 SUBMITTALS

A. Submit in accordance with Specification Section - SUBMITTAL PROCEDURES:
   1. Product Data:
      a. Manufacturer's specification and installation instructions for splice devices.
         1) Bar supports.
   2. Shop Drawings
      a. Detail in accordance with ACI 315 "Details and Detailing of Concrete Reinforcing".
      b. Indicate bending diagrams, assembly diagrams, splicing and laps of bars and shapes, dimensions and details of bar reinforcing and assemblies. Correctness of all reinforcing requirements and work is the responsibility of Contractor. Identify such shop drawings with reference thereon to sheet and detail numbers from Contract Drawings.
         1) Do not use scaled dimensions from Contract Drawings in determining the lengths of reinforcing bars.
         2) No reinforcing steel shall be fabricated without approved shop drawings.

3) One of the required submittal copies shall be reproducible transparency.
4) Any deviations from the contract documents must be clearly indicated as a deviation on the shop drawings.
5) Areas of high congestion, including member joints and embed locations shall be fully detailed to verify clearances and assembly parameters and coordination with other trades.

c. Certificates of Compliance with specified standards:
1) Reinforcing Bars.
2) Welded wire fabric.
3) Welding electrodes.

3. Samples
a. Only as requested by Architect.

4. Quality Assurance/Control Submittals:
a. Test Reports – Testing Laboratory shall submit to DSA/SSS, Project Inspector, Architect, Structural Engineer and the Contractor one (1) copy of each report showing results of test.
1) Certified mill test reports of supplied reinforcing indicating chemical and physical analysis. Tensile and bend tests shall be performed by the mill in accordance with ASTM A 615 "Specification for Deformed and Plain Carbon-Steel Bars for Structural Concrete".
2) Testing Laboratory reinforcement tests in accordance with CBC Table 1705A.2.1, CBC Section 1910A, and the provisions of Specification Section – TESTING LABORATORY SERVICES.
3) Owner will pay for tests of samples taken from identified bundles accompanied by mill analysis.

b. Certificates of Compliance with specified standards:
1) Reinforcing bars.
2) Welded wire fabric.
3) Welding electrodes.
4) Welder's Certification.

5. Closeout Submittals:
a. Project Record Documents in accordance with Specification Section - PROJECT DOCUMENTS.
b. Warranty.

1.4 QUALITY ASSURANCE

A. Qualifications:
1. Installer Qualifications:
a. Installation shall be done only by an installation firm normally engaged in this business. All work shall be performed by qualified mechanics working under an experienced supervisor.

2. Welding Qualifications:
a. Welding procedures, welding operators and welders shall be qualified in accordance with AWS D1.4 – "Structural Welding Code Reinforcing Steel".
b. Welders shall be recently qualified by Test as prescribed in AWS "Standard Qualifications Procedure".
1) Welders whose work fails to pass inspection shall be re-qualified before performing further welding.

3. Manufacturer/Supplier Qualifications:

a. Acceptable Manufacturers/Suppliers shall be regularly engaged in the manufacture of steel bar and wire fabric reinforcing.

4. Testing Laboratory will be approved by DSA/SSS, and selected by the Architect and the Owner.

B. Regulatory Requirements:

1. In accordance with Specification Section – REGULATORY REQUIREMENTS and the following:

a. CARB Materials and equipment used for this Project shall comply with the current applicable regulations of the California Air Resources Board (CARB)and the Environmental Protection Agency (EPA), in the area where the project is located.

C. General:

1. Reinforcement work shall conform to ACI 301 "Specifications for Structural Concrete for Buildings", and CBC Section 1905A and 1913A as minimum standards.

1.5 DELIVERY, STORAGE, AND HANDLING

A. Packing, shipping, handling, and unloading:

1. Deliver reinforcement to Project plainly tagged, completely fabricated and ready to set.

B. Storage and protection:

1. Store reinforcement above the ground surface on platforms, skids or other supports, protected from dirt, rust, or other substances which will prevent bonding to the concrete.
2. Use all necessary care to maintain identification after bundles are taken apart.

1.6 WARRANTY

A. Contractor's General Warranty:

1. In accordance with Specification Section - WARRANTIES.

B. Manufacturer's Warranty:

1. In accordance with manufacturer's written standard warranty:

a. Warranty Period One (1) Year.

C. Installer's Warranty:

1. In accordance with the terms of the Specification Section - WARRANTIES.

a. Warranty Period One (1) Year.

PART 2 - PRODUCTS

2.1 MATERIALS

A. Deformed Bars: In accordance with ASTM A 706 "Low Alloy Steel Deformed Bars for Concrete Reinforcement" and ASTM A 615 "Specification for Deformed and Plain Carbon-Steel Bars for Concrete Reinforcement", Grade as indicated on the structural drawings.

B. Tie Wire: In accordance with ASTM A 82 "Cold Drawn Wire for Concrete Reinforcement", plain, cold-drawn steel.

C. Welded Wire Fabric: In accordance with ASTM A 185 "Welded Steel Wire Fabric for Concrete Reinforcement".

D. Steel Dowels: Same grade as bars to which dowels are connected.

2.2 ACCESSORIES

A. Supports for Reinforcement: Provide bolsters, chairs, spacers, and other devices for spacing, supporting, and fastening, deformed bars and welded wire fabric in place. Use wire bar-type supports complying with CRSI specifications.
   1. Supports and spacing of spacers per standards set forth by CRSI/WCRSI Manual of Standard Practice.
   2. For slabs-on-grade, use supports with sand plates or horizontal runners where base material will not support chair legs.
   3. For exposed-to-view concrete surfaces, where legs of supports are in contact with forms, provide supports with legs that are protected by plastic [color to match adjacent concrete surfaces] in accordance with CRSI Class I, or stainless steel in accordance with CRSI, Class II.

B. Welding Electrodes: As per AWS D1.4 "Structural Welding Code for Reinforcing Steel".

C. Mechanical Couplers: Mechanical Couplers shall develop 125 percent of the specified yield strength of the bars, and shall comply with ACI 318 "Building Code Requirements for Structural Concrete and Commentary", Section 12.14.3.

2.3 FABRICATION

A. Bending: In accordance with ACI 318 "Building Code Requirements for Structural Concrete and Commentary", except as modified by CBC Sections 1905A.
   1. Fabricate reinforcement in accordance with the requirements of ACI 315 "Details and Detailing of Concrete Reinforcement", where specific details are not shown.
   2. Inside diameter of bends for stirrups and ties shall not be less than 1-1/2 inches for No. 3 bars, 2 inches for No. 4 bars and 2-1/2 inches for No. 5 bars.
   3. Where bent bars are straightened: field bending of bars will only be done in accordance with DSA/SSS approval per ACI 318 "Building Code Requirements for Structural Concrete and Commentary", Section 7.3.2. Steel reinforcement shall not be bent or straightened in a manner that will injure the material. Bars with kinks or bends not shown on the drawings shall not be used. Heating of bars will not be permitted.
   4. Provide offsets in rebar (1:6 maximum) where required to maintain clearances.

B. Allowable Tolerances:
   1. Fabrication:
      a. Sheared length: 1 inch.
      b. Depth of truss bars: Plus 0., minus 1/2 inch.
      c. Ties: Plus or minus 1/2 inch.
      d. All other bends: Plus or minus 1 inch.

PART 3 - EXECUTION

3.1 INSTALLATION

A. Placing:
1. Place Reinforcement accurately.
2. Do not move bars beyond allowable without concurrence of the Architect.
3. Do not heat, bend, or cut bars without concurrence of the Architect.
4. Reinforcement shall not be bent after being embedded in hardened concrete.
5. Tie Reinforcement together at all intersections with Tie Wire.
6. Support Reinforcing Bars by bar supports. Place and secure in accordance with CRSI "Specifications for Placing Bar Supports".
7. Placement and support shall be complete.
8. Do not use Reinforcing Bars with kinks or bends except when detailed on the structural drawings.
9. Architect shall approve placement and support before concrete is deposited.
10. Spiral reinforcing shall comply with ACI 318 "Building Code Requirements for Structural Concrete and Commentary".

B. Spacing:
1. Clear space between parallel Reinforcing Bars shall not be less than 1 bar diameter nor less than 1 inch, unless otherwise noted on drawings.

C. Splicing:
1. At splices, lap Reinforcing Bars 53 diameters minimum, unless otherwise indicated on Drawings.
   a. Lap Splices: Tie securely with wire to prevent displacement of splices during placement of concrete.
   b. Splice Devices: Install in accordance with manufacturer's written instructions.
      1) Obtain the Architect's review before using.
   c. Do not splice bars except at locations shown without the concurrence of the Architect.
      1) Where splices in addition to those indicated are required, indicate location on shop drawings clearly and highlight "for the Architect's approval".
2. Stagger splices as indicated on drawings. Splice locations shall be as shown on drawings or shall be approved by Architect and DSA/SSS.
   a. Near floors.
   b. Ductile concrete columns must splice at the centerline of the column height.
   c. As detailed on the drawings.
3. Where vertical Reinforcing Bars are offset at a splice, the slope of the inclined portion of bar with the axis of the column or wall shall not exceed 1 in 6.
4. Welded Wire Fabric:
   a. Install in long lengths, lapping 24 inches at end splices and one mesh at side splices.
   b. Offset laps in adjacent widths.
   c. Place fabric in approximately the middle of the slab thickness unless otherwise shown on the drawings.
   d. Wire tie lap joints at 12 inch centers.
   e. Use concrete blocks to support mesh in proper position.

5. Mechanical bar splices shall be approved by the Architect and DSA/SSS.

D. Welding:
1. Welding is not permitted unless specifically detailed on Drawings or approved by the Architect.
2. Weld under supervision of qualified Testing Laboratory selected by Owner. Cost of supervision to be paid by the Owner. Weld only ASTM A 706 "Specification for Low-Alloy Steel Deformed and Plain Bars for Concrete Reinforcement", unless otherwise noted.
3. Employ shielding metal-arc method and meet requirements of AWS D1.4 "Structural Welding Code for Reinforcing Steel".
4. Welding is not permitted on bars where carbon equivalent is unknown or is determined to exceed 0.55.
5. Welding shall not be done within two bar diameters of any bent portion of a bar which has been bent cold.
6. Welding of crossing bars is not permitted.
7. Provide material properties supplemental report for bars other than ASTM A706 "Low Alloy Steel Deformed Bars for Concrete Reinforcement".
8. Weld in accordance with AWS D1.4 "Structural Welding Code for Reinforcing Steel".
   a. Weld only where indicated on the drawings.
   b. Weld only ASTM A 615 "Specification for Deformed and Plain Carbon-Steel Bars for Concrete Reinforcement", unless otherwise approved by the Architect and DSA/SSS.
9. Inspection provided per CBC Table 1705A.

E. Allowable Tolerances:
1. Placement:
   a. Concrete cover to form surfaces: Plus or minus 1/4 inch.
   b. Minimum spacing between bars: Plus or minus 1/4 inch.
   c. Crosswise of members: Spaced evenly with 2 inches of stated separation.
   d. Lengthwise of members: Plus or minus 2 inches.
2. Maximum bar movement to avoid interference with other reinforcing steel, conduits, or embedded items: 2 bar diameters.

F. Drawing Notes: Refer to notes on drawings for additional reinforcement requirements.

G. Mechanical, Electrical and Plumbing Drawings:
1. Refer to Mechanical, Electrical and Plumbing drawings for formed concrete requiring reinforcing steel.
2. All such steel shall be included under the work of this section.

3.2 CONSTRUCTION

A. Corrective Measures:
1. Notify Architect if conduit, piping, inserts, sleeves, etc. interfere with placement of Concrete Reinforcement as indicated on Drawings. Notify Architect immediately if any Concrete Reinforcement is found to be misplaced after concrete has been poured.
2. Do not cut, bend, kink or hickey misplaced reinforcement.
3. Make corrections only as directed by Architect and approved by DSA/SSS.
4. This Contractor shall bear the cost of any alteration, corrections or replacements of Concrete Reinforcing to concrete required because of misplaced reinforcement.

3.3 FIELD AND QUALITY CONTROL

A. Site Tests:
   1. When inspections are indicated for reinforcement placement on the Structural drawings, a special inspector shall be employed to inspect reinforcing placement per CBC Table 1705A.3.
   2. Inspect shop and field welding in accordance with AWS D1.4 "Structural Welding Code for Reinforcing Steel", including checking materials, equipment, procedure and welder qualifications as well as the welds. Inspector will use non-destructive testing or any other aid to visual inspection that he deems necessary to assure himself of the adequacy of the weld.

B. Inspections:
   1. All reinforcing steel whose properties are not identifiable by mill test reports shall be tested in accordance with ASTM A 706 "Specification for Deformed and Plain Low-Alloy Steel Bars for Concrete Reinforcement". One series of tests shall be performed for each missing report. Contractor shall pay for test required due to lack of positive identification, by means of a back charge by the Owner.
   2. When tests are indicated for reinforcing steel on the structural drawings, the reinforcing steel used shall be tested in accordance with ASTM A 615 "Specification for Deformed and Plain Carbon-Steel Bars for Concrete Reinforcement". One tensile and one bend test for each 2-1/2 tons of steel or fraction thereof, shall be made.

C. Tests and Inspection shall be performed by Owner's Testing Laboratory except when needed to justify rejected work, in which case the cost of re-tests and re-inspection shall be borne by the Contractor.

3.4 CLEANING

A. Reinforcement, at time concrete is placed, shall be free of loose rust scale, mud, oil or other coating that will destroy or reduce the bond.

END OF SECTION

SECTION 033000 - CAST-IN-PLACE CONCRETE

PART 1 - GENERAL

1.1 SUMMARY

A. This Section includes the following:
   1. Provide all material, labor, equipment and services necessary to completely install all Cast-In-Place Concrete materials, accessories and other related items necessary to complete the Project as indicated by the Contract Documents.

B. Related Sections: The following Sections contain requirements that relate to this Section:
   1. ALL DIVISION 00 SPECIFICATION SECTIONS.
   2. ALL DIVISION 01 SPECIFICATION SECTIONS.
   3. 03 11 01 CONCRETE FORMWORK
   4. 03 20 00 REINFORCEMENT
   5. 06 10 00 ROUGH CARPENTRY
   6. 10 05 00 MISCELLANEOUS SPECIALTIES
   7. 10 14 00 IDENTIFYING DEVICES
   8. 31 20 00 EARTHWORK
   9. 31 31 00 SOIL TREATMENT
   10. 32 12 00 PAVEMENT
   11. ALL SPECIFICATION SECTIONS IN THE FACILITY SERVICES SUBGROUP.
   12. ALL SPECIFICATION SECTIONS IN THE SITE AND INFRASTRUCTURE SUBGROUP.

1.2 REFERENCES

A. Standards:
   1. In accordance with the following standards:
      a. ACI American Concrete Institute
      b. ASTM American Society of Testing Materials.
      c. RFCI The Resilient Floor Covering Institute
      d. RIS Redwood Inspection Service
      e. RMAI Rubber Manufacturers Association Inc.

1.3 SUBMITTALS

A. Submit in accordance with Specification Section - SUBMITTAL PROCEDURES:
   1. Coordination Drawings:
      a. Layout drawings for construction, control and expansion joints.
   2. Product Data.
      a. Submit data on all products listed under MATERIALS, and ACCESSORIES within this specification section.
   3. Quality Assurance/Control Submittals:
      a. Coordinate with Specification Section - TESTING LABORATORY SERVICES for additional Testing Requirements as required by DSA.

b. Material samples and mix designs:
   1) Material samples and mix designs as required for testing shall be submitted to Architect at least fourteen (14) days prior to any concrete work and shall include results of test data used to establish proportions.
      a) Grout samples and colors for colored surfaces upon Architect's request only.

c. Test Reports:
   1) Testing Laboratory shall submit to Architect, Structural Engineer, Owner, and to the DSA one (1) copy of each report showing results of tests.
      a) Report shall state that tests were made in accordance with specifications.
      b) Report shall state whether materials were in conformance with specifications.
      c) Report shall state whether the curing of the concrete slabs are within parameters required for future flooring installations.

d. Certificates:
   1) Submit three (3) copies of certificates.
      a) Cement manufacturer's Mill Certificate of Compliance with the specification.
      b) Certificates for aggregates and admixtures.

4. Closeout Submittals:
   a. Project Record Documents in accordance with Specification Section - PROJECT DOCUMENTS.
   b. Warranty in accordance with Specification Section - WARRANTIES.

1.4 QUALITY ASSURANCE

A. Qualifications:
   1. Installer Qualifications:
      a. Engage an experienced Installer who has successfully completed three (3) projects of similar scope and size to that indicated for this Project.
   2. Manufacturer/Supplier Qualifications:
      a. Firm experienced in successfully producing/supplying products similar to that indicated for this Project, with sufficient production/supply capacity to produce/supply required units without causing delay in the Work.
   3. Testing Laboratory Qualifications:
      a. Qualified Testing Laboratory and personnel approved by DSA.
         1) Cost of testing and inspection will be paid by the Owner unless otherwise specified. The Owner shall pay all costs of re-inspection and/or re-tests due to non-compliance with specifications and/or failures, but the Contractor shall reimburse the Owner for these tests when billed or deducted from its payment.

B. Regulatory Requirements:
   1. In accordance with Specification Section - REGULATORY REQUIREMENTS, and the following:
      a. All materials, equipment and placing operations shall be subject to inspection, tests and approval at all items. Testing Agent shall have free and unhampered access to all places where concrete materials are stored proportioned and mixed.

b. CARB Materials and equipment used for this Project shall comply with the current applicable regulations of the California Air Resources Board (CARB) and the Environmental Protection Agency (EPA), in the area where the project is located.

C. Meetings:
1. Pre-Installation: Scheduled by the Contractor prior to the start of work.
   a. Coordinate the work with other related work being performed.
      1) Schedule pre-construction conference with Vapor Retarder Manufacturer prior to installation at least one week prior to scheduled installation.
   b. Identify any potential problems that may impede planned progress and proper installation of work regarding quality of installation and warranty requirements.
   c. Prior to submitting design mixes, review detailed requirements for preparing concrete design mixes and determine procedures for satisfactory concrete operations.
   d. Review requirements for submittals, status of coordinating work, and availability of materials.
   e. Establish preliminary work progress schedule and procedures for materials inspection, testing, and certifications.
2. Progress: Scheduled by the Contractor during the performance of the work.
   a. Review for proper installation of work progress.
   b. Identify any installation problems and acceptable corrective measures.
   c. Identify any measures to maintain or regain project schedule if necessary.
3. Completion: Scheduled by the Contractor upon proper completion of the work.
   a. Inspect and identify any problems that may impede issuance of warranties or guaranties.
   b. Maintain installed work until the Notice of Substantial Completion has been executed.

1.5 PROJECT CONDITIONS

A. Environmental requirements:
1. Cold Weather Requirements:
   a. Do not pour concrete unless air temperature is at least 40 degrees Fahrenheit and rising.
   b. Do not pour concrete on frozen ground or ice.
   c. Heat and otherwise prepare materials in accordance with ACI Standard 306.
   d. Maintain concrete temperature at 50 degrees Fahrenheit (minimum) the first three (3) days after pouring. Protect concrete from freezing the first six (6) six days, after placing.
2. Hot Weather Requirements:
   a. Do not pour when temperature exceeds 90 degrees Fahrenheit.
   b. During hot weather, proper attention shall be given to ingredients, production methods, handling, placing, protection, and curing to prevent excessive Concrete temperatures or water evaporation, which will impair the required strength or serviceability of the member or structure.

1.6 WARRANTY

A. In accordance with Specification Section - WARRANTIES.

PART 2 - PRODUCTS

2.1 MANUFACTURERS

A. Products specified are from companies listed below, or approved equivalent. These products listed herein establish the size, pattern, color range, and function selected by the Architect for this Project. Manufacturers listed as acceptable alternative manufacturers must still comply with the requirements of the products listed in order to be approved as an equivalent during the Submittal Process. If the acceptable manufacturers listed are not approved during the Submittal Process due to non-compliance with the contract documents, then the Contractor shall submit product specified, or approved equivalent:

1. Cement:
   a. Natural (Grey) Portland Cement:
      1) LEHIGH PORTLAND CEMENT COMPANY.
      2) TXI CEMENT COMPANY (formerly RIVERSIDE WHITE CEMENT).
   b. White Cement:
      1) LEHIGH WHITE CEMENT
      2) TXI CEMENT COMPANY (formerly RIVERSIDE WHITE CEMENT).
2. Admixtures:
   a. Water Reducing, High Range:
      1) W.R. GRACE CONSTRUCTION PRODUCTS.
   b. Integrally Colored Concrete Color Pigment:
3. Bonding Agents:
   a. Specified product manufacturer: CONRAD SOVIG CO., INC.
      1) "Cemlok-NE"
   b. Acceptable alternative product manufacturers:
      1) THE EUCLID CHEMICAL COMPANY "Eucoweld".
      2) LARSON PRODUCTS CORPORATION "Weld-Crete".
      3) SONNEBORN "Sonobond".
      4) W.R. GRACE CONSTRUCTION PRODUCTS "Darweld C".
      5) W.R. MEADOWS "Deck-O-Weld".
4. Epoxy Adhesives and Mortar Materials:
5. Non-Shrink Grout:
   a. Specified product manufacturer:
      1) MINWAX CONSTRUCTION PRODUCTS COMPANY "POR-ROK" Epoxy Grout.
   b. Acceptable alternative product manufacturers:
      1) MASTER BUILDERS "713".
      2) MASTER BUILDERS "928".
6. Drypack Grout Materials:
   a. Specified product manufacturer:
      1) THE EUCLID CHEMICAL COMPANY"Euco Dry Pack Grout".
   b. Acceptable alternative product manufacturers:
      1) W.R. MEADOWS "Pac-It Grout".
7. Fiber Expansion Joint Filler:
   a. Specified product manufacturer:
      1) W.R. MEADOWS "Sealtight Fiber Expansion Joint Filler".
   b. Acceptable alternative product manufacturer:

1) CELOTEX CORP."Flexcell".
2) PHILLIP CAREY MFG. CO. "Elastic Fiber Expansion Joint".

8. Slab Curing Compound (SCC):
   a. Specified product manufacturer:
      1) THE EUCLID CHEMICAL COMPANY "Diamond Clear VOX".
   b. Acceptable alternative product manufacturers:
      1) W.R. MEADOWS "Sealtight VOComp 25".

B. Products from other manufacturers not listed must submit in accordance with Specification Section - SUBSTITUTION PROCEDURES.

2.2 MATERIALS

A. Concrete:
1. Cement: Type I or II in accordance with ACI 318 Chapter 3, and ASTM C 150 "Specifications for Portland Cement".
   a. Provide white cement for mixing when the Project requires patching for defective work, to match adjacent material color. See Specification Section - CAST-IN-PLACE CONCRETE, Part 3 Article titled "APPLICATIONS", the paragraph titled "Sack Finish".
2. Water: Clean and free from deleterious amounts of acids, alkalis, salts, organic material, or other substances that may be deleterious to concrete or reinforcing.
3. Aggregates:
   a. Normal weight aggregates in accordance with ACI 318 Chapter 3 and ASTM C33 "Standard Specifications for Concrete Aggregates". Crushed Granite or "Perkins" type aggregates are acceptable materials.
      1) Maximum Aggregate Size: 1-1/2 inches for standard aggregate.
      2) Coarse aggregate when tested in accordance with State of California Highways Test Methods 227 shall have a cleanliness value of 75 minimum.
      3) Fine aggregates when tested in accordance with State of California Highways Test Methods 217 shall have a sand equivalent of 75 minimum.
4. Admixtures: Admixtures shall be in accordance with the provisions of ACI 318-14 and shall not be used until prior approval from DSA has been obtained.
   Calcium Chloride is not permitted.
   a. Air Entraining:
      1) Conform to ASTM C 260 "Specifications for Air-Entraining Admixtures for Concrete".
   b. Fly Ash (Not to exceed 15 percent of the total cementitious material per DSA :
      1) Conform to ASTM C 618 "Specification for Coal Fly Ash and Raw or Calcined Natural Possolan for Use in Concrete".
      2) Class "C" Fly Ash is not permitted per CBC 1903A.5.
   c. Water Reducing, High Range: On approval of DSA , the Architect and the Structural Engineer, the Contractor may use a High Range Water Reducing Admixture complying with ASTM C 494 "Specification for Chemical Admixtures for Concrete". Use one of the following materials:
      1) Finish Enhancing Water Reducer; "ADVA 170" by GRACE Construction Products, or approved equivalent.
         a) ASTM C 494 "Specification for Chemical Admixtures for Concrete", Type F.
   d. Integrally Colored Concrete Color Pigment:

2.3 ACCESSORIES

A. Bonding Agents: Polyvinyl acetate or acrylic base, mixed in accordance with the manufacturer's written recommendations.

B. Mortar:
1. Site Mix:
   a. Composed of Concrete Materials indicated in Specification Section - CAST-IN-PLACE CONCRETE, Part 2 Article titled "MATERIALS".
      1) Mix: One part cement to 3 parts aggregate (all aggregate shall pass No. 4 sieve).
      2) Mixing: Thoroughly mixed in accordance with ACI 318 "Building Code Requirements for Structural Concrete and Commentary".
2. Epoxy Mortar and Adhesive Materials:
   a. Modified Polyamide, high modulas mortar, strength to match adjacent concrete or greater, in accordance with ASTM C 881 "Specification for Epoxy-Resin-Base Bonding Systems for Concrete", Grade 1, Type III, Class B & C, and in accordance with ACI 503.4, mixed in accordance with the manufacturer's written recommendations.
   b. Mixing: Thoroughly mixed in accordance with CBC Section 1905A.8.

C. Grout:
1. Strength to match adjacent concrete or greater, composed of Concrete Materials indicated in Specification Section - CAST-IN-PLACE CONCRETE, Part 2 Article titled "MATERIALS".
   a. Mix: Same proportions as concrete mix except omit coarse aggregate and adjust water to produce a thick consistency. Provide mix design per CBC Section 1905A.2.
   b. Mixing: In accordance with ACI 318 "Building Code Requirements for Structural Concrete and Commentary".
2. Non-Shrink Grout: Flowable, non-shrink, self-leveling, non-staining, non-metallic grout, strength to match adjacent concrete or greater, and in compliance with ASTM C 1107 "Specification for Packaged Dry, Hydraulic-Cement Grout (Nonshrink)":
3. Drypack Grout: Non-staining, non-shrink, non-metallic grout, strength to match adjacent concrete or greater, and in accordance with ASTM C 1107 "Specification for Packaged Dry, Hydraulic-Cement Grout (Nonshrink)", mixed in accordance with the manufacturer's written recommendation.

D. Fiber Expansion Joint Filler: 1/4" thick at vertical joints and 1/2" thick under thresholds (unless specifically noted otherwise), asphalt saturated fiber expansion joint filler, in accordance with ASTM D 1751 "Specification for Preformed Expansion Joint Filler for Concrete Paving and Structural Construction (Nonextruding and Resilient Bituminous Types":

E. Slab Curing Compound (SCC): Provide liquid-type membrane-forming sealing compound, non-yellowing, VOC compliant cure and seal, complying with ASTM C 309 "Specification for Liquid Membrane-Forming Compounds for Curing Concrete", Type I, Class A, that when dry is clear in color. Moisture loss not more than 0.55 kg/sq. meter when applied at 200 sq.ft./gal.

F. Sack Finish Materials: For repair and patching of defective areas.

1. Provide sack finish materials composed of Concrete Materials indicated in Specification Section - CAST-IN-PLACE CONCRETE, Part 2 Article titled "MATERIALS". Sand shall be fine.
2. Mix: One part cement to one part fine sand with enough water to provide a creamy consistency.

2.4 MIXES

A. Mix Design and Proportions in accordance with ACI 318 "Building Code Requirements for Structural Concrete and Commentary":
1. Initial mix design shall be prepared for all concrete by recognizing testing laboratory (approved by Architect). In the event that additional mix designs are required due to depletion of aggregate sources, aggregate not conforming to Specifications, or at request of Contractor, these mixes shall be prepared as above.
2. Contractor shall notify the Testing Laboratory and Architect of intent to use concrete pumps to place concrete so that mix designs can be modified accordingly.
3. Mix designs with Fly Ash content greater than 15 percent of the total weight of cementitious materials shall be proportioned by ACI 318 "Building Code Requirements for Structural Concrete and Commentary".
   a. Provide 3 percent air entrainment typical, 6 percent for mixes with f'c greater than 4,000 psi when required.
4. Owner's testing laboratory shall review all mix design before submittal.
5. All concrete shall have the following minimum compressive strengths in accordance with ACI 318 "Building Code Requirements for Structural Concrete and Commentary" at 28 days and shall be proportioned within the following limits:
   a. Site: Use for exterior concrete slabs on grade such as walks, site work, mechanical and electrical pads and miscellaneous site items:
      1) Strength: 2,500 psi at 28 days.
      2) Max. Aggregate Size: 1 inch.
      3) Cement Content: 5.0 sacks/yd min. as determined by mix design.
      4) Max. Water/Cement Ratio: 0.60.
      5) Admixture: Water Reducing.
      6) Weight: 145 pcf.

B. Consistency of Concrete: Concrete slump, measured in accordance with ASTM C 143 "Test method for Slump of Hydraulic-Cement Concrete", shall fall within the following limits:
1. For General concrete placement: 3 inch plus or minus 1 inch.
2. Mixes employing the specified high range water reducer shall provide a measured slump not to exceed 7 inch +/- 1 inch after dosing, 2 inch +/- 1 inch before dosing.
3. Concrete slump shall be taken at point of placement. Use water reducing admixtures as required, to provide a workable consistency for pump mixers. Water shall not be added in route by truck or at the jobsite without written review by the Architect.

C. Mixing:
1. Equipment: All concrete shall be machine mixed. Provide adequate equipment and facilities for accurate measurement and control of materials.
2. Method of Mixing to comply with CBC 1905A.8:
   a. Transit Mixing: Comply with ASTM C 94 "Specification for Ready-Mixed Concrete". Ready mixed concrete shall be used throughout, except as specified below.

1) On-Site Mixing: Use only if method of storing material, mixing of material and type of mixing equipment is approved by Architect.
2) Approval of site mixing does not relieve Contractor of any other requirements of Specifications.

3. Mixing Time: After mix water has been added, concrete shall be mixed not less than 1-1/2 minutes nor more than 1-1/2 hours. Concrete shall be rejected if not deposited within the time specified.
4. Admixtures:
   a. Use automatic metering dispenser to introduce admixture into mix. Dispenser shall be recommended and calibrated by admixture manufacturer.
      1) Integrally Colored Concrete Color Pigment: Follow the manufacturers written recommendations for proper mixing of the selected pigment color.
   b. Admixtures shall be charged into mixer as a solution and shall be dispensed by an automatic dispenser or similar metering device. Powdered admixtures shall be weighed or measured by volume as recommended by manufacturer. Accuracy of measurement of any admixture shall be within plus or minus 3 percent.
   c. Two or more admixtures may be used in same concrete, provided such admixtures are added separately during batching sequence, and provided further that admixtures used in that combination retain full efficiency and have no deleterious effect on concrete or on properties of each other.
   d. All admixtures are to be approved by Architect prior to commencing this work.
5. Re-tempering:
   a. Concrete shall be mixed only in quantities for immediate use. Concrete, which has set shall be discarded, not re-tempered.
   b. Indiscriminate addition of water to increase slump is prohibited.
   c. When concrete arrives at project with slump below what is suitable for placing, water may be added only if neither maximum permissible water-cement ratio nor maximum slump is exceeded.
      1) Water shall be incorporated by additional mixing equal to at least half of total mixing time required.
      2) Any addition of water above that permitted by limitation of water-cement ratio shall be accompanied by a quantity of cement sufficient to maintain proper water-cement ratio.
      3) Such additions shall only be used if approved by the Architect.
      4) In any event, with or without addition of cement, not more than 2 gallons of water per cubic yard of concrete, over that specified in the design mix, shall be added.
6. Cold Weather Batching: When temperature is below 40 degrees F, or is likely to fall below 40 degrees F during a 24 hour period after placing, provide adequate equipment for heating concrete materials.
   a. No frozen materials or materials containing ice shall be used.
   b. Temperatures of separate materials, including mixing water, when placed in mixer shall not exceed 100 degrees F.
   c. When placed in forms, concrete shall have a temperature between 50 degrees F and 85 degrees F.
7. Hot Weather Batching: Concrete deposited in hot weather shall have a placing temperature below 85 degrees F. If necessary, ingredients shall be cooled to accomplish this.

2.5 FINISHES

A. Slab Finishes:
1. Tooled Finishes:
a. Scratch Finish: Apply scratch finish to slab surfaces to receive concrete floor topping or mortar setting beds for tile, and other bonded applied cementitous finish flooring material.
b. Float Finish: Apply float finish to slab surfaces to receive trowel finish and other finishes as specified; membranes, elastic waterproofing, elastic roofing, or sand-bed terrazzo.
c. Trowel Finish: Apply a non-slip trowel finish to surfaces to be covered with resilient flooring, thin-set ceramic or quarry tile, paint or another thin film-finish coating system
1) Sweat Trowel Finish: Apply a non-slip steel trowel ("sweat") finish (tight circular motion pattern approved by the Architect) to slab surfaces exposed to view.
d. Broom Finish: All concrete paving and concrete finishes, and exterior concrete platforms, steps, ramps and other areas requiring non-slip finishes, unless otherwise indicated, shall have a non-slip broom finish (as defined by ACI) applied in the following manner:
1) Medium Broom Finish.
a) Equivalent to a DSA/ACS "Medium Salted" finish term.
2) Rough Broom Finish.
a) Equivalent to a DSA/ACS "Heavy Broom" finish term.
2. Applied Finishes:
a. Spray Curing Compound (SCC): Used as a curing compound for exterior slabs on grade with no additional topical flooring applications applied to the exterior slabs on grade.
3. Repair finishes (Vertical surfaces):
a. "Sack Finish": Applied to defective surfaces mixed to the color and consistency required to match the adjacent materials in color and strength.

2.6 SOURCE QUALITY CONTROL

A. Test, Inspection:
1. Inspection of Mix:
a. Quality and quantity of material used shall be subject to continuous inspection by a qualified person. Sampling and testing of cement and aggregates in accordance with Title 24, Part 1, Section 4-335, and CBC Section 1705A, and Table 1705A.3.
b. Maintain sources of material supply constantly after approval of concrete mix.

PART 3 - EXECUTION

3.1 EXAMINATION

A. Site verification of conditions:

1. Contractor shall inspect bearing soil and report soft or loose unsuitable bearing soil to Architect.
2. Architect will furnish Contractor with corrective measures necessary to remedy field condition.
3. Do not pour concrete until suitable bearing surfaces are achieved.
4. At Engineered Fill, remove soft and loose unsuitable fill and replace with concrete. Cost shall be paid by Contractor.
5. Contractor shall inspect and identify any site conditions and/or design information that prevents the Contractor from complying with the laws, regulations and/or building codes governing ADA access compliance.

3.2 PREPARATION

A. Transportation of Concrete:
1. Handle Concrete from mixer to place of final deposit as rapidly as practical by methods which shall prevent the separation or loss of the ingredients in accordance with ACI Standard 304.3R "Heavyweight Concrete Measuring, Mixing, Transporting, and Placing".
2. Do not move concrete horizontally by means of vibrators.
3. Deposit concrete as nearly as practical at its final position in a manner which, will ensure that required quality is obtained.
4. Chutes shall slope not less than 4 inches and not more than 6 inches per foot of horizontal run.

B. Protection:
1. At old concrete or concrete which has begun to set upon which Concrete is to be placed:
   a. Surface shall be level, cleaned of all laitance and rough with solidly embedded large aggregate exposed.
   b. Rough surface by chipping entire surface not earlier than 5 days after set, by high pressure hosing (80 pounds per square inch) 2 to 4 hours after placing or by sand blasting with coarse silica sand, roughness amplitude shall be at lease 1/4 inch.
   c. Not more than 1/2 hour prior to pouring concrete, place 2 inch thick uniform layer of grout on old concrete.

C. Surface preparation:
1. Remove all water from excavation. Divert flow of water through drains using methods to avoid washing over freshly deposited concrete.
2. Remove hardened concrete, wood chips, shavings and other debris from interior of forms and from reinforcing steel by vacuum process.
   a. No wooden ties or blocking shall be left in concrete except where indicated for attachment of other work.
3. Forms shall have been erected, adequately braced, cleaned, sealed, lubricated if required, and bulkheaded where placing is to stop.
4. Any wood forms other than plywood shall be thoroughly water soaked before placing any concrete.
   a. The wetting of forms shall be started at least 12 hours before concreting.
5. Reinforcing steel shall have been placed, tied and supported.
6. Coordinate with Specification Section - SOIL TREATMENT before placing any concrete.
7. Embedded work of all trades shall be in place in the forms and adequately tied and braced.

8. Reinforcing steel, at the time the concrete is placed around it, shall be cleaned of scale, mill scale or other contaminants that will destroy or reduce bond.
9. Concrete surfaces to which fresh concrete is to be bonded shall be brush cleaned to remove all dust and foreign matter and to expose the aggregate, and then coated with the bonding adhesive herein specified.
10. Prior to placing concrete for any slabs on grade, the moisture content of the subgrade below the slabs shall be adjusted to at least optimum moisture.
11. No concrete shall be placed until formwork, reinforcement, and embedded items have been approved by the Architect.
    a. Clean forms of all debris and remove standing water.
    b. Thoroughly clean reinforcement and all handling equipment for mixing and transporting concrete.
    c. Concrete shall not be placed against reinforcing steel that is hot to the touch. Notify Architect 48 hours in advance of concrete pour.
12. Provide runways or other approved means for wheeled equipment. Do not wheel equipment over reinforcing or formwork.

D. Construction Joints:
1. Install concrete joints only as indicated and noted on Drawings.
    a. Joints not indicated on drawings shall be so located, when approved, as to least impair strength of structure, and shall conform to typical details and in accordance with ACI Standards.
    b. Construction joints shall have level tops, vertical sides.
    c. See drawings for doweling and required keys.
    d. Roughen construction joints by any of the following methods:
        1) By sandblasting joint.
        2) By thoroughly washing joint, using a high pressure hose, after concrete has taken initial set. Washing shall be done not less than 2 hours nor more than 4 hours after concrete has been poured, depending upon setting time.
        3) By chipping and wire brushing.
    e. All decisions pertaining to adequacy of construction joint surfaces and to compliance with requirements pertaining to construction joints shall be reviewed with the Architect.
    f. Just before starting new pour, horizontal and vertical joint surfaces shall be dampened (but not saturated).
    g. Before placing regular concrete mix, horizontal and vertical joint surfaces shall be covered with a layer of mortar composed of cement and fine aggregate of same proportions as that used in prescribed mix, but omitting coarse aggregate.
2. Pour lengths shall be as follows, unless specifically noted otherwise.
    a. Foundations 100 feet maximum
    b. Slabs on grade (exterior) 30 feet maximum
3. All joints locations shall have the Architect's approval.

E. Expansion and Control Joints:
1. Expansion Joints, typical:
    a. Location:
        1) In exterior slabs on grade locate at each side of structure/vertical surface, at curb transition opposite apron joints, at end of curb returns, and at back of curb when adjacent to walk.
    b. Spacing:

1) At walks, etc. maximum spacing 30 feet on center (unless specifically noted otherwise).

c. Installation:

1) Install Expansion Filler in expansion joints.
2) "Glue" Expansion Filler to edge of previous pour.
3) Top of Expansion Filler parallel with top of slab and 1/4 inch maximum below and level with slab surface.
4) When concrete has taken initial set, the edge of concrete surface shall be rounded by tooling to top of Expansion Filler.
5) Interrupt reinforcing at all expansion joints.
6) Refer to Drawings for detail.

2. Control Joints, typical:

a. Construct control joints (contraction joints) in slabs-on-ground to form panels of patterns not exceeding 10 feet on center in either direction and located to conform to bay spacing wherever possible (at column centerlines, half bays, third bays, etc), unless specifically noted otherwise.

1) Use saw cuts 1/8 inch wide by 1/4 of slab depth, or tooled joints with rounded edges 1/8 inch wide by 1/4 of slab depth, unless specifically noted otherwise.
2) Control joints in unexposed floor slabs may be formed by saw cuts as soon as possible after slab finishing without dislodging aggregate.
3) Slab reinforcing need not be terminated at control joints.

3. All joints (expansion and control joints) are to be straight and true with no spalling of edges on either side of the joint.

a. Construction and expansion joints shall be counted as control joints.

3.3 INSTALLATION

A. Placing of concrete - general:

1. All concrete shall be placed under direct supervision of the Architect or Owner's Inspector.
2. Notify DSA not less than forty-eight (48) hours prior to pouring of first concrete.
3. Place concrete in accordance with CBC Section 1905A.10.
4. Do not place Concrete outside of regular working hours except to complete work already started.
5. Do not use Concrete which has been mixed for a period longer than one and one-half (1-1/2) hours or which has started to stiffen or set.
6. Re-mixing on concrete, which has started to set, shall not be permitted.
7. Pouring of concrete shall be a continuous operation until the completion of the Section or Panel in accordance with ACI Standard 304.
8. Consolidation:

a. Concrete shall be thoroughly compacted and worked to all points with solid continuous contact to forms and reinforcement to eliminate air pockets and honeycombing.
b. Power vibrators shall be used immediately following pour.
c. Spading by hand, hammering of forms or other combination of methods will be allowed only where permitted by Architect.
d. In no case shall vibrators be placed against reinforcing steel or used for extensive shifting of deposited fresh concrete.
e. Provide and maintain standby vibrators, ready for immediate use.

9. Keep a record of times, dates and locations of all concrete placing operations for the duration of the project. Record shall be available to Architect at all times.
10. In no case shall concrete be poured into an accumulation of water ahead of pour.
11. If any concrete operation, once planned, can not be completed in a continuous operation, placement shall stop at temporary bulkheads located where resulting construction joints will least impair the strength of the structure. The location of construction joints shall be as shown on the drawings, or as approved by Architect.
12. Hot Weather Concreting: Unless otherwise directed by the Architect, perform all work in accordance with ACI 305 when air temperature rises above 75 degrees F and the following:
    a. Mixing Water: Keep water temperature as low as necessary to provide for the required concrete temperature at time of placing. Ice may be required to provide for the design temperature.
    b. Aggregate: Keep aggregate piles continuously moist by sprinkling with water.
    c. Temperature of Concrete: The temperature of the concrete mix at the time it is being placed in the forms shall not exceed 85 degrees F.
        1) The method employed to provide this temperature shall in no way alter or endanger the design mix or the design strength required.
        2) Dampen subgrade and formwork before placing concrete.
        3) Remove all excess water before placing concrete.
        4) Keep concrete continuously wet when air temperature exceeds 85 degrees F for a minimum of 48 hours after placing concrete.
    d. Protection: Minimize evaporation from concrete in place by providing shade and windbreaks. Maintain such protection for 14 days minimum.
13. Cold Weather Concreting: Follow recommended ACI 306 procedures when air temperature falls below 40 degrees F., as approved by Architect.
    a. Concrete placed in freezing temperature shall have a temperature of not less than 50 degrees F.
    b. Maintain this temperature for at least 7 days.
    c. No chemicals or salts shall be used to prevent freezing and no accelerating agents shall be used without prior approval from Architect.

B. Placing of concrete at Footings, etc.:
1. Concrete shall be placed in layers not to exceed twenty-four (24) inches in depth, and shall be thoroughly compacted.
    a. Wait forty minutes before placing next layer.
    b. Re-vibrate six (6) inches into previous lift before next lift is added.
    c. Locate top of lift at or below top of wall opening.
2. Use openings in forms, elephant trunks or other approved methods to prevent accumulation of concrete on forms and reinforcement above the level of pour.
    a. Unconfined free falls shall not exceed five (5) feet.
3. Where placing or consolidation is restricted by close assemblage of reinforcing and/or forms use a Modified Mix Concrete with smaller aggregate and/or pour 3 inches of neat grout into form prior to regular mix.
4. Concrete shall not be flowed horizontally along forms.

C. Placing of concrete at slab on grade:
1. Slabs on grade shall not be poured until the sub-grade has been thoroughly compacted and properly prepared, nor until reinforcement and inserts are securely fastened in place.
2. No greater area shall be poured at one time than can be properly finished without checking.

3. Slabs on grade shall be laid out in a checkerboard pattern when applicable. Pour and allow alternate slabs to set.
   a. Fill out balance of checkerboard pattern with subsequent pour.
4. Concrete shall be poured as dry as possible, consistent with good workmanship.
   a. Water shall not be added to mix to improve workability without approval of the Architect.
5. Concrete shall be compacted by hand tamping and by mechanical vibration.
   a. After the concrete is thoroughly compacted, the surface shall be screeded off, any surface water removed an finish applied as specified.
6. The Contractor may, on approval of DSA and the Architect, use a Finish Enhancing Admixture (High Range Water Reducer) in accordance with Article Titled MATERIALS.

D. Placing of concrete by pumps:
1. If pumps are used to place concrete, the fines (3/8" and smaller) shall not exceed 45% of the total volume of aggregate. Standby equipment must be provided to insure completing pours to planned cutoffs.
2. Pumps shall handle concrete at a uniform rate without bleeding or segregation of aggregates. Concrete from end of the hose shall have a free fall not to exceed four (4) feet. Aluminum pipe shall not be used to transport pumped concrete.

E. Installation of nonshrink grout or drypack: Install under base plates immediately after erection of structural steel.
1. General: Ram in thin layers, using a short length of ram, the free end of which shall be struck with a heavy hammer or mallet, several blows for each layer, to compact the mixture. When completed, the exposed drypack shall show slight indication of moisture.
2. Curing: Cure with a curing compound or with moisture-retaining barrier kept wet.

3.4 APPLICATION

A. Finishes application:
1. Screed, consolidate, and level concrete slabs prior to any Tooled or Applied Finish.
2. Tooled Finishes:
   a. Scratch finish:
      1) After screeding, consolidating, and leveling, roughen surface before final set with stiff brushes, brooms, or rakes.
   b. Float finish:
      1) After screeding, consolidating, and leveling concrete slabs, do not work surface until ready for floating.
      2) Begin floating, using float blades or float shoes only, when surface water has disappeared, or when concrete has stiffened sufficiently to permit operation of power-driven floats, or both.
      3) Consolidate surface with power-driven floats or by hand floating if area is small or inaccessible to power units.
      4) Finish surfaces to tolerances indicated.
      5) Cut down high spots and fill low spots.
      6) Immediately after leveling, refloat surface to a uniform, smooth, granular texture.
   c. Trowel finish:

1) After floating, begin first trowel-finish operation using a power-driven trowel.
   a) Begin final troweling when surface produces a ringing sound as trowel is moved over surface.
   b) Consolidate concrete surface by final hand-troweling operation, free of trowel marks, uniform in texture and appearance, and finish surfaces to tolerances indicated.
   c) Grind smooth any surface defects that would telegraph through applied floor covering system.
2) Where thin set ceramic or quarry tile is to be installed with thin-set mortar, apply a trowel finish as specified, then immediately follow by slightly scarifying the surface with a fine broom.
3) Apply a non-slip "Sweat Trowel" finish (tight circular motion approved by the Architect) to exterior slabs in the final troweling operation.

d. Broom finish:
1) Immediately after float finishing, slightly roughen concrete surface by brooming with fiber-bristle broom perpendicular to main traffic route for the indicated broom finish.
2) Medium Broom Finish: On all surfaces having a pitch of less than 6%.
3) Rough Broom Finish: On all surfaces having a pitch of more than 6%.

3. Applied Finishes:
a. Slab Curing Compound Finish (SCC):
1) Apply Clear Slab Curing Compound Sealer Finish in accordance with manufacturer's written recommendations, and in exterior areas only as indicated by the Contract Documents.

4. Repair Finishes:
a. "Sack Finish": Use only enough water as required for handling and placing.
1) Cut out honeycombs, rock pockets, voids over 1/4 inch in any dimension, and holes left by tie rods and bolts down to solid concrete but in no case to a depth less than one (1) inch.
   a) Make edges of cuts perpendicular to the concrete surface.
   b) Thoroughly clean, dampen with water, and brush-coat the area to be patched with a bonding agent.
   c) Place patching mortar before bonding agent has dried.
2) For surfaces exposed to view, blend white portland cement and standard portland cement so that, when dry, patching mortar will match surrounding color.
   a) Provide test areas at inconspicuous locations to verify mixture and color match before proceeding with patching.
   b) Compact mortar in place and strike-off slightly higher than surrounding surface.

B. Concrete curing and protection:
1. Protect freshly placed concrete from premature drying and excessive cold or hot temperatures.
a. In hot, dry, and windy weather protect concrete from rapid moisture loss before and during finishing operations with an evaporation-control material.
b. Apply according to manufacturer's written instructions after screeding and bull floating, but before power floating and troweling.

2. Start initial curing as soon as free water has disappeared from concrete surface after placing and finishing. Weather permitting, keep continuously moist for not less than ten (10) days.
3. Formed Surfaces:
   a. Wet forms immediately after pouring.
   b. Keep forms and exposed surfaces wet until forms are removed.
   c. Keep all surfaces wet after forms are removed for ten (10) days after placement of Concrete.
4. Concrete Slab Curing Methods:
   a. One spray coat of clear curing compound.
      1) Agitate curing compounds thoroughly by Mechanical means continuously during use and spray or brush uniformly in accordance with manufacturer's written recommendations.
      2) Not applicable for:
         a) Slabs designated for Adhesively Applied Floor Coverings.
         b) Slabs designated for Resinous Flooring on top of concrete slab.
         c) Slabs designated for Polished Concrete Finishing.

3.5 CONSTRUCTION

A. Site Tolerances:
1. Exterior Site Improvements:
   a. Placement of all concrete shall not exceed 0.02 feet variance from designated grades.
   b. Surface variation of all concrete slabs shall not exceed 0.01 foot in 10 feet.
   c. Construction of all concrete subject to ADA access compliance, including Accessible Path of Travel, curb returns, parking stalls and unloading areas, barrier free amenities and / or other applicable site improvements shall conform to the Americans with Disabilities Act, California Title 24 and the California Building Code, regardless of any construction tolerances. Examples of minimum and maximum limits related to ADA access compliance include, but are not limited to:
      1) Accessible Path of Travel cross-slope shall not exceed 2%.
      2) Accessible Path of Travel longitudinal slopes shall not exceed 5%.
      3) Ramp longitudinal slopes shall not exceed 8.33%.
      4) Walks shall not have less than 48 inches in unobstructed width.
   d. Contractor shall maintain all grades and slopes through out construction and until Notice of Completion has been filed.

3.6 REPAIR/RESTORATION

A. Minor Defects:
1. Minor defects in concrete shall mean any of the following:
   a. Pour joints, voids, rock pockets, tie holes, etc. where strength, and durability is not adversely affected.
   b. Shrinkage Cracks where slabs are not exposed or where appearance is not important
   c. Minor defects of pour joints, voids, rock pockets, tie holes,etc.
   d. Immediately after removing forms, inspect all concrete surfaces. Patch any pour joints, voids, rock pockets, tie holes, etc., as soon as possible, but not until the defect has been examined by the Architect.

e. Chip away defective areas to a minimum depth of one inch, with edges perpendicular to surface. Clean area to be patched of all laitance.
f. Coat area to be patched with Bonding Agent. Patch with Mortar mixed with Bonding Agent thoroughly compacted into place and screeded off to leave the patch slightly higher than the surrounding surface. After at least one hour finish patch to match the adjoining surface. Cure patch by application of curing compound or by wetting for seven (7) days.
g. Fill tie holes solid with mortar after cleaning and thoroughly wetting. Fill through holes by means of a plunger-type grease gun. See Specification Section - CONCRETE FORMWORK, Part 3 Article titled "INSTALLATION", and the paragraph titled "Indentations" for exception.
h. Remove fins and rough surfaces from all exposed concrete.

2. Minor defect of shrinkage cracks:
   a. After entire slab is finished and fully cured, shrinkage cracks larger than 1/32 inch wide shall be filled with cement grout and struck off level with surface.

B. Serious Defects:
1. Serious defects in concrete shall mean any of the following:
   a. Concrete not meeting 100 percent of the specified 28 day compressive strength.
   b. Concrete exhibiting rock pockets, voids, spalls, streaks, cracks, exposed reinforcing to extent that strength, durability, or appearance is adversely affected.
   c. Concrete significantly out of place, line or level.
   d. Concrete not containing the required embedded items.
   e. Shrinkage Cracks where slabs are exposed and appearance is important.
   f. Concrete where patching does not satisfactorily restore quality and appearance of surface.
2. Upon determination that concrete strength is defective:
   a. Should cylinder tests fall below minimum strength specified, concrete mix for remainder of work shall be adjusted to produce required strength. Core samples shall be taken and tested from cast-in-place concrete where cylinders and samples indicate inferior concrete with less than minimum specified strength.
   b. Cores of hardened concrete shall be taken and tested in accordance with ASTM C 39 "Test method for Compressive Strength of Cylindrical Concrete Specimens" and ASTM C 42 "Test method for Obtaining and Testing Drilled Cores and Sawed Beams of Concrete". Number and location of such cores shall be subject to the approval of Architect.
   c. Cost of core sampling and testing will be paid for by the Contractor.
   d. "500 psi" and "85 percent" reduction in ACI 318 Section 5.6.5.4 will not justify low cylinder tests.
   e. If core tests indicate that concrete is below the strength specified, the concrete shall be deemed defective, and shall be removed and replaced without additional cost to the Owner.
3. Major defect of shrinkage cracks.
   a. After entire slab is finished and fully cured, unsightly shrinkage cracks shall be repaired in a manner satisfactory in appearance to the Architect. If this cannot be accomplished, concrete shall be considered defective.
4. Upon determining that concrete surface is defective:
   a. Contractor may restore concrete to acceptable condition by cutting, chipping, pointing, patching, grinding, if this can be done without significantly altering strength of structure.

b. Permission to patch defective areas will not be considered a waiver of the right to require removal if patching does not, in the opinion of the Architect, satisfactorily restore quality and appearance.
c. If patching does not restore concrete to specified quality and appearance, the concrete shall be deemed defective, and shall be removed and replaced without additional cost to the Owner.
d. No repair work shall begin until concrete has been examined and procedures have been reviewed by the Architect and Structural Engineer and approved by DSA .

5. Repair defects by complete removal of concrete and replacement or repair defects with Shotcrete in accordance with CBC Sections 1913A, strength to match mix design and material being repaired.
6. Place and cure Shotcrete in accordance with CBC Section 1913A.
7. Inspect and test Shotcrete as per CBC Section 1704A.4, Table 1704A.4.4.

C. Cost of repairing shall be borne by the Contractor.

3.7 FIELD QUALITY CONTROL

A. Contractor's Field Quality Control:
1. Contractor shall protect slabs receiving flooring products from excess moisture after the curing process, removing excess moisture after rains, broken water pipes, etc., to ensure that the monolithic slabs are dry enough for application of flooring products. When all spaces have been enclosed, acclimate the building as soon as possible with the building's own mechanical heating and cooling system, and other outside devices as required to properly prepare the monolithic slabs for flooring installation.
a. The test sites for the Calcium Chloride Tests shall be at the same room temperature and humidity expected during normal use. If this is not possible, then the test site conditions should be 75 degrees F (plus or minus 10 degrees F) and 50 % relative humidity (plus or minus 10% relative humidity) 48 hours prior to, and during testing.
2. Contractor shall maintain temperature and humidity in a manner not deleterious to the flooring materials installed until the Owner assumes occupancy.

B. Site Tests:
1. Compression Tests:
a. Testing Agent will make a set of four (4) concrete compression cylinders from each fifty (50) cubic yards of each class of concrete, or fraction thereof, placed each day, and cure and test concrete compression cylinders in accordance with ASTM C 31 "Practice for Making and Curing Concrete Test Specimens in the Field", ASTM C 39 "Test method for Compressive Strength of Cylindrical Concrete Specimens", and ASTM C 172 "Practice for Sampling Freshly Mixed Concrete".
1) From each concrete compression cylinder set, Testing Agent shall test one cylinder at age seven (7) days, test two cylinders at age twenty-eight (28) days per ACI 318-05 5.6.2.4 and hold one cylinder for test only if directed by the Architect.
2) Cylinders shall be identified as to area from which they were taken and show the date and time of day they were prepared.
b. Testing Agent shall also test Grout and Mortar as required for compliance to Compression Requirements specified.

C. Inspection:

1. Project Inspector shall inspect placement of concrete and grout.

3.8 CLEANING

A. The top of all concrete foundations receiving concrete masonry units shall be washed free of all laitance and loose concrete, and roughened to a roughness amplitude of 1/4".

B. Remove all debris, excess materials, tools, and equipment resulting from or used in this operation at completion of work.

END OF SECTION

SECTION 061000 – ROUGH CARPENTRY

PART 1 - GENERAL

1.1 SUMMARY

A. This Section includes the following:
   1. Provide all material, labor, equipment and services necessary to complete all rough carpentry, accessories and other related items necessary to complete the Project as indicated by the Construction Documents unless specifically excluded.

B. Related Sections: The following Sections contain requirements that relate to this Section:
   1. ALL DIVISION 00 SPECIFICATION SECTIONS.
   2. ALL DIVISION 01 SPECIFICATION SECTIONS.
   3. 03 11 01 CONCRETE FORMWORK
   4. 03 30 00 CAST-IN-PLACE CONCRETE
   5. 06 41 23 MODULAR CASEWORK
   6. 10 05 00 MISCELLANEOUS SPECIALTIES
   7. 10 11 00 VISUAL DISPLAY BOARDS
   8. 10 44 00 FIRE PROTECTION SPECIALTIES
   9. ALL SPECIFICATION SECTIONS IN THE FACILITY SERVICES SUBGROUP.
   10. ALL SPECIFICATION SECTIONS IN THE SITE AND INFRASTRUCTURE SUBGROUP.

1.2 REFERENCES

A. Standards:
   1. In accordance with the following standards:
      a. ALSC American Lumber Standards Committee
      b. ANSI American National Standards Institute
      c. APA The Engineered Wood Association (Formerly the American Plywood Association)
      d. ASME American Society of Mechanical Engineers International
      e. AWPA American Wood Protection Association
      f. CABO Council of American Building Officials
      g. FS Federal Specification
      h. ICC International Code Council
      i. NDS National Design Specification for Wood Construction
      j. NIST National Institute of Standards and Technology
      k. PS Product Standards of the U.S. Department of Commerce
      l. RIS Redwood Inspection Service
      m. WCLIB West Coast Lumber Inspection Bureau
      n. WWPA Western Wood Products Association

1.3 SUBMITTALS

A. Submit in accordance with Specification Section - SUBMITTAL PROCEDURES:

1. Product Data:
    a. Submit manufacturer's data for Wood-Preservative Treatment.
    b. Submit manufacturer's data for power driven fasteners.
2. Quality Assurance/Control Submittals:
    a. Material Certificates: Submit three (3) copies of Material Certificates of Compliance to Standards and Regulatory Requirements.

1.4 QUALITY ASSURANCE

A. Qualifications:
1. Installer Qualifications:
    a. Engage an experienced Installer who has successfully completed three (3) projects of similar scope and size to that indicated for this Project.

B. Regulatory Requirements:
1. In accordance with Specification Section - REGULATORY REQUIREMENTS, and the following:
    a. CARB Materials and equipment used for this Project shall comply with the current applicable regulations of the California Air Resources Board (CARB) and the Environmental Protection Agency (EPA), in the area where the project is located.

C. Meetings:
1. Pre-Installation: Scheduled by the Contractor prior to the start of work.
    a. Coordinate the work with other work being performed.
    b. Identify any potential problems that may impede planned progress and proper installation of work regarding quality of installation and warranty requirements.
2. Progress: Scheduled by the Contractor during the performance of the work.
    a. Review for proper installation of work progress.
    b. Identify any installation problems and acceptable corrective measures.
    c. Identify any measures to maintain or regain project schedule if necessary.
3. Completion: Scheduled by the Contractor upon proper completion of the work.
    a. Inspect and identify any problems that may impede issuance of warranties or guaranties.
    b. Maintaining installed work until the Notice of Substantial Completion has been executed.

1.5 DELIVERY, STORAGE, AND HANDLING

A. Deliver undamaged products to project site in manufacturer's sealed containers or bundles with tags and labels intact.

B. Storage and Protection:
1. Products shall be stored above ground on level platforms, six (6) inches above ground, allowing air circulation under stacked units.
2. Cover materials with protective waterproof covering providing for adequate air circulation and ventilation.

1.6 PROJECT CONDITIONS

A. Environmental Requirements:
   1. Dust Control: Perform work in a manner as to minimize the spread of dust and flying particles.
   2. Burning: No burning will be allowed on-site.
   3. Rain: Work under this section shall not be started or maintained under threat of rain unless the work is not affected by the rain.

B. Existing Conditions:
   1. Examine site and compare it with the drawings and specifications. Thoroughly investigate and verify conditions under which the work is to be performed. No allowance will be made for extra work resulting from negligence or failure to be acquainted with all available information concerning conditions necessary to estimate the difficulty or cost of the work.

PART 2 - PRODUCTS

2.1 MANUFACTURERS

A. Products specified are from companies listed below, or approved equivalent. These products listed herein establish the size, pattern, color range and published design load function selected by the Architect or its Designated Design Consultant for this Project. Manufacturers that are listed as acceptable alternative manufacturers must still comply with the requirements of the products listed in order to be approved as an equivalent during the Submittal Process. If the acceptable alternative manufacturers listed are not approved during the Submittal Process due to non-compliance with the contract documents, then the Contractor shall submit product specified.
   1. Power Driven Fastener specified product manufacturer, or approved equivalent:
      a. HILTI FASTENING SYSTEMS.

B. Products from other manufacturers not listed must submit in accordance with Specification Section - SUBSTITUTION PROCEDURES.

2.2 MATERIALS

A. Wood:
   1. Douglas Fir - Larch:
      a. Standards and Requirements: In accordance with WCLIB “Standard Grading and Dressing Rules” No. 17, latest edition, and WWPA “Western Lumber Grading Rules”, latest edition.
         1) All wood shall be “DRY” and having a moisture content of less than 19 percent at the time of installation, in accordance with WWPA.
         2) Provide wood of S4S unless otherwise noted.
         3) Factory mark each piece of wood with the grade stamp of the grading agency.
      b. Grading and Use Requirements:

Item	Sizes	Grade	Maximum Moisture Content at Initial Use (Installation)
Studs	2x	No. 1	19%
Studs	3x, 4x, 6x	No. 1	19%
Sills & Plates	2x	Construction	19%
Sills & Plates	3x, 4x, 6x	Construction	19%
Beams	4x, 6x	No. 1	19%
Joists	2x	No. 1	19%
Posts	4x, 6x, 8x	No. 1	19%
Ledgers	2x	No. 2	19%
Ledgers	3x, 4x, 6x	No. 1	19%
Blocking	2x, 3x, 4x, 6x	Construction	19%
Sheathing and Stripping	Up to 1-1/2" thick 2" width and wider	Construction	19%
Stripping	2x, 3x, 4x, 6x	Construction	19%
Nailers & Grounds	2x, 3x, 4x, 6x	Construction	19%
Furring	2x, 3x, 4x, 6x	Construction	19%

1) "At initial use" shall be that point at which screws or other fasteners or the holes for said fasteners are installed into the wood.
2) The Contractor shall use whatever means necessary, including site drying to ensure that the moisture contents listed above are not exceeded.

B. Plywood:
1. Soft Plywood:
a. Standards and Requirements: In accordance with PS1-95, Group 1 Douglas-Fir and PS2-92.
1) Factory mark each piece of plywood with the APA Grade Stamp.
2) Maximum Moisture Content at Initial Use (Installation) shall be 15 percent.
b. Grading and Use Requirements:
1) Backing panels for Electrical Equipment.
a) APA Rated Sheathing - Structural 2.
b) Exposure Durability Classification - Exterior.
c) Species Group 1.
d) Grade C-C.
e) Shall be 3/4 inch minimum thickness.
2) Backing panels for Telecommunication Equipment:
a) APA Rated Sheathing - Structural 2.
b) Exposure Durability Classification - Exterior.
c) Species Group 1.
d) Grade A-B.
e) Shall be 3/4 inch minimum thickness.

2.3 FINISHES

A. Preservative Treatment:
1. Pressure Treat Wood and Plywood, with CARB Complying, EPA Registered, preservatives in accordance with AWPA Standards "U", "T", and "P".

a. Do not use material that does not comply with the requirements for untreated material.
b. After treatment, kiln-dry wood to a maximum moisture content of 19 percent.
c. After treatment, dry plywood to a maximum moisture content of 15 percent.
d. Factory mark each treated item with the treatment quality mark of an Independent Inspection Agency approved by the ALSC Treated Wood Program.

2. Non-pressure treat Wood and Plywood, with CARB Complying, EPA Registered preservatives in accordance with AWPA Standards “U”, “T”, “P” and “N”.

2.4 ACCESSORIES

A. Fasteners: All types shall comply with standards and dimensions of the latest edition of NDS. All types of fasteners exposed to wet or exterior conditions, in-ground contact, in pressure or preservative treated woods, fire retardant treated woods, in concrete or masonry, or in an area of high relative humidity shall be hot-dipped galvanized in accordance with ASTM A153.

1. Nails: Common wire nails or spikes complying with ASTM F1667 and CBC Section 2304.9. Box nails and sinker nails are not permitted. Vinyl coating is permitted on common nails.
2. Bolts: Steel bolts complying with ASTM A307, Grade A, hex head.
   a. Provide hex head nuts complying with ASTM A307, and standard flat washers complying with ANSI/ASME B18.22.1, Type A, Wide pattern.
3. Lag Bolts: Shall comply with ANSI/ASME B18.2.1, hex head.
   a. Provide standard flat washers complying with ANSI/ASME B18.22.1, Type A, Wide pattern.
4. Wood Screws: Shall comply with ANSI/ASME B18.6.1.
   a. Screws for fastening wood to Metal Framing shall comply with ASTM C954.
5. Power Driven Fasteners: Tempered Steel pins with corrosive resistant plating or coating complying with ICC ESR-1539.

PART 3 - EXECUTION

3.1 EXAMINATION

A. Site verification of conditions:

1. Prior to the execution of the work under this specification section, inspect the installed work executed under other sections of this Project Manual, which affect the execution of work under this specification section.
2. Report unacceptable conditions to the Architect. Do not begin work until unacceptable conditions have been corrected.
3. Execution of work under this specification section shall constitute acceptance of existing conditions.
4. Verify that work under this Section may be performed in strict accordance with the original design and all pertinent codes and regulations.

3.2 PREPARATION

A. Coordination:

1. Coordinate work under this specification section with work specified under other sections to ensure proper and adequate interface of work.

B. Protection:
1. Protect all materials from damage occurring from work called for under this specification section.

C. Preservative Treatment:
1. Members requiring pressure treatment:
   a. Sills, Plates, Blocking, Nailers and Furring attached or resting on or against concrete construction.
   b. Pressure treated members cut in the field shall have the cut ends painted with preservative until the wood or plywood absorbs no more preservative.
2. Members requiring field treatment:
   a. All wood and plywood members at exterior walls within two feet of the ground surface.
   b. Treat all surfaces of the member.
   c. Treat by dipping the required portion of the member into preservative for 15 minutes or paint until the wood or plywood absorbs no more preservative. Wait a minimum of two hours after dipping or painting is complete to incorporate member into project.
   d. Test treat items for compatibility where additional finish coats (stain or paint) may occur.

D. Fire Retardant Treatment:
1. All wood and plywood members as indicated.
2. All plywood panels for Telecommunication Equipment.

3.3 INSTALLATION

A. General:
1. In accordance with manufacturer's instructions and recommendations unless specifically noted otherwise.
2. In accordance with approved submittals.
3. In accordance with Regulatory Requirements.
4. Selection of wood and plywood pieces:
   a. Carefully select all members.
   b. Select individual pieces so that knots and obvious defects will not interfere with placing bolts, proper nailing, and making proper connections.
   c. Cut out and discard all defects which will render a piece unable to serve its intended function.
   d. Wood and plywood may be rejected by the Architect or its Designated Design Consultant, and DSA whether or not it has been installed for excessive warp, twist, bow, crook, mildew, fungus, or mold as well as for improper cutting, fitting and treatment when required.
5. All wood and plywood shall be accurately cut to lengths required.
6. All work shall produce joints true, tight, level, plumb, and all members are securely anchored.
   a. Do not shim any framing member.

B. Layout:

1. Lines shall be straight and true.

C. Fastening:
1. Nails:
   a. All nailing shall be as required by CBC schedule 2304.9.1 "Fastening Schedule".
   b. Machine nailing may be approved subject to the approval of the Architect or its Designated Design Consultant, and DSA.
      1) The use of machine nailing is subject to a satisfactory job site demonstration for each project. The approval is subject to continued satisfactory performance.
      2) In plywood, if the nail heads penetrate beyond flush with the surface of the sheathing, or if minimum allowable edge distances are not maintained, the performance will be deemed unsatisfactory.
      3) Machine nailing will not be accepted in 5/16” plywood.
   c. Penetration of nails or spikes shall be one-half the length of the nail or spike into the piece receiving the point.
   d. 16d nails shall be used to connect pieces 2” in thickness unless otherwise indicated.
   e. Clinch nails protruding through members.
   f. Bore holes for nails where necessary to prevent splitting.
   g. Use Finish or Casing Nails for finish work.
2. Lag Bolts:
   a. Lag Bolts shall be screwed into place. No driving is allowed.
   b. For the Shank portion, holes shall be bored the same depth and diameter as the shank. For threaded portion, holes shall be between 60% and 75% of the shank diameter.
   c. Malleable Iron or Steel plate washers shall be used where bolt heads bear on wood or plywood. Washers shall have an area equal to 16 times the area of the bolt.
      1) Steel plate washers shall have a thickness not less than 1/10 the length of the washer’s longest side.
      2) Malleable Iron washers shall have a bearing surface for the head equal in diameter to not less that the long diameter of the head.
   d. Tighten all bolts and screws prior to concealing within structure.
3. Bolts:
   a. Holes shall be 1/16” larger than bolt diameter.
   b. Malleable Iron or Steel plate washers shall be used where bolt head and nuts bear on wood or plywood. Washers shall have an area equal to 16 times the area of the bolt.
      1) Steel plate washers shall have a thickness not less than 1/10 the length of the washer’s longest side.
      2) Malleable Iron washers shall have a bearing surface for the head or nut equal in diameter to not less that the long diameter of the head or nut.
   c. Tighten all bolts prior to concealing within structure.
4. Power Driven Anchors
   a. Fastening shall be accomplished by low-velocity piston-driven power activated tool.
   b. Pins shall have guide washers to accurately control penetration.

D. Plates:
1. Shall be in long lengths and spliced as indicated.

E. Blocking:

1. Blocking shall be same thickness and width of studs or joists unless otherwise indicated.
2. Install blocking at all wall, floor, or roof penetrations.
   a. Blocking shall provide surface for fastening applied interior or exterior flashings or flanges.
3. Install blocking at all plywood joints.
   a. Install blocking at plywood edges including crickets and parapet wall bracing.

F. Plywood Sheathing Panels:
1. For panels with different veneer face grades, the exposed face shall always be the higher grade.
2. Space panels 1/8 inch at all edge and end joints, and in accordance with APA.
3. Panels shall be applied with the long dimension (or strength axis) across the framing.
4. Fasten from the field of the panel first and then to the ends and edges to reduce stressing of the panel surfaces.
5. Center all joints over bearing supports.
6. Wall panels shall continue uninterrupted by ceilings or soffits from floor to floor or roof unless otherwise indicated.

G. Sheathing:
1. Shall be in accordance with CBC Section 2304.6 and table 2304.6 and table 2304.6.1.

H. Nailers:
1. Shall be installed as indicated and where required for attaching other work.
2. Form to shapes indicated.
3. Coordinate locations with other work involved.
4. Provide nailers at all flashing and edge terminations when required by roofing manufacturer for metal and concrete roof decks. When the roof system is required to be Class A use fire-retardant treated wood.

I. Furring and Stripping
1. Shall be installed as indicated and where required to provide fastening material or space for the passage of pipes, conduits, etc. not accommodated including ceiling stripping.

J. Sealant:
1. When indicated, Primer shall be in accordance with sealant manufacturer recommendations.
2. When indicated, Joint Sealer shall be in accordance with Specification Section - SEALANTS.

3.4 CONSTRUCTION

A. Pipes:
1. Frame to avoid cutting or drilling for passage of pipes, ducts, and conduit.
2. Follow criteria as indicated for cutting or drilling. Unusual edge distances and awkward spacing and sizes shall be brought to the Architects attention for remedy.

B. Temporary Enclosures:
1. Provide and maintain all baricades and enclosures required to protect the work in progress.

C. Shoring or Bracing:

1. Shore or brace for temporay support of all work as required during the construction period except any shoring and bracing specified and included under other sections of this Project Manual.

3.5 FIELD QUALITY CONTROL

A. Site Tests:
   1. As required by Regulatory Requirements.
   2. Project Inspector shall verify by means of a handheld moisture content meter that all wood and plywood supplied at the time of incorporation into structure(s) has met applicable moisture content requirements.
   3. Project Inspector shall test all stud cavity walls to ensure that studs are a maximum of 19 percent moisture content prior to any other construction that encloses the wall cavity.

B. Inspection:
   1. As required by Regulatory Requirements.
   2. Schedule inspections and notify the Architect, Project Inspector and any other regulatory agencies of the time at least 48 hours prior to the inspection.
   3. No work shall be without the inspections required by Regulatory Requirements.

3.6 CLEANING

A. Removal of Debris:
   1. Remove all Wood, including form lumber, chips, shavings and sawdust in or on the ground from the areas inside buildings. Do not bury debris in fill.

END OF SECTION

SECTION 064123 – MODULAR CASEWORK

PART 1 - GENERAL

1.1 SUMMARY

A. This Section includes the following:
   1. Provide all material, labor, equipment and services necessary to completely install all Modular Casework materials, accessories and other related items necessary to complete the Project as indicated by the Contract Documents.
      a. Plastic laminate-faced casework.
      b. Transparent wood finish casework.
      c. Adjustable shelf supports:Metal Shelf Standards
      d. Plastic Laminate countertops.
      e. Solid-Surface countertops.
      f. Epoxy countertops.
      g. Phenolic countertops.
      h. Solid-stave wood countertops.
      i. Solid-surface fabrications.
      j. Plastic fabrications.

B. Related Sections: The following Sections contain requirements that relate to this Section:
   1. ALL DIVISION 00 SPECIFICATION SECTIONS.
   2. ALL DIVISION 01 SPECIFICATION SECTIONS.
   3. 03 30 00 CAST-IN-PLACE CONCRETE
   4. 06 10 00 ROUGH CARPENTRY
   5. 09 72 00 WALL COVERINGS
   6. 10 05 00 MISCELLANEOUS SPECIALTIES
   7. ALL SPECIFICATION SECTIONS IN THE FACILITY SERVICES SUBGROUP.
   8. ALL SPECIFICATION SECTIONS IN THE SITE AND INFRASTRUCTURE SUBGROUP.

1.2 REFERENCES

A. Standards:
   1. In accordance with the following standards:
      a. BHMA BHMA stands for Builders Hardware Manufacturers Associates, Inc.
      b. NAAWS "North American Architectural Woodwork Standards", Latest Edition, including latest amendments, by the Architectural Woodwork Institute, Architectural Woodwork Manufacturers Association of Canada, and the Woodwork Institute.
      c. NEMA National Electrical Manufacturers' Associates, Publication Number LD3, latest-edition
      d. NIST National Institute of Standards and Technology
      e. NWMA "Industrial Standard" National Woodwork Manufacturer's Association.
      f. PS Product Standard of the U. S. Department of Commerce
      g. WI Woodwork Institute

1.3 DEFINITIONS

A. Refer to NAAWS.

B. Exposed Portions:
1. Face members and edges of cabinets (cabinet fronts), such as face plates, drawer fronts, door fronts, front edge of shelves.
2. Interior faces of cabinet doors.
3. Underside of bottoms of upper cabinets, 48" above finished floor.
4. Cabinet tops:
   a. Under 72" above finish floor.
   b. Visible from upper building level.
5. Interior surfaces (including top, bottom, and front of shelves) of open cabinets or cabinets with glass doors.
6. All surfaces of exposed shelves.
7. All surfaces exposed to view.

C. Semi-Exposed Portions:
1. Cabinet divisions, shelves, insides of drawers, and any other cabinet members which cannot be seen when door or drawers are closed.

D. Concealed Portions:
1. Cabinet framing that cannot be seen, such as web frame members, sleepers, dust panels, toe strips covered with resilient base.

E. Shelving:
1. Top and bottom surfaces. Face surfaces are the front and rear edges.
   a. Ends are the left/right edges as you face the cabinet.
2. The bottom surface material of all Upper Cabinets attached to walls shall be considered a shelf and manufactured as a shelf.

F. Quality Assurance Options:
1. Certified Compliance Program (CCP):
   a. The CCP is an established discipline of quality control, for use in conjunction with the NAAWS, which provides a non-biased means of confirming conformance to a project's drawings and specifications.
   b. Contractor to provide field inspection by WI Director, additional to CCP requirements.
   c. The Woodwork Manufacturer shall have no less than 5 years of production experience, similar to this project, whose qualifications indicate the ability to comply with the requirements of this Section.
   d. The Woodwork Manufacturer must have at least one project in the past 5 years where the value of the woodwork was within 20 percent of the cost of woodwork for this Project.
2. Monitored Compliance Program (MCP):
   a. The MCP is an established discipline of quality control, for use in conjunction with the NAAWS, which provides a non-biased means of confirming conformance to a project's drawings and specifications,
   b. Includes ongoing review/inspections of the project from its start to certification at completion.

c. The Woodwork Manufacturer shall have no less than 5 years of production experience, similar to this project, whose qualifications indicate the ability to comply with the requirements of this Section.

d. The Woodwork Manufacturer must have at least one project in the past 5 years where the value of the woodwork was within 20 percent of the cost of woodwork for this Project.

1.4 SYSTEM DESCRIPTION

A. Performance Requirements: It is the intention of this specification section and the drawings to form a guide for a complete and operable system. Any items not specifically noted but necessary for a complete and operable system shall be provided under this section.

1. All shelving must be manufactured according to NAAWS for Schools, Hospitals and Library or Book Shelving. 50 lbs./SF.

1.5 SUBMITTALS

A. Submit in accordance with Specification Section - SUBMITTAL PROCEDURES:

1. Product Data.
   a. Submit manufacturer's full color range (including any standard and premium colors) for selection by the Architect.
   b. Submit 2 copies of Manufacturer's current specifications for Modular Casework including all types of cabinets and accessories included in this section to the Architect for approval prior to fabrication.
2. Shop Drawings.
   a. Submit shop drawings from manufacturer detailing equipment assemblies and indicating dimensions, weights, loadings, required clearances, method of field assembly, seam locations, components, and location and size of each field connection.
   b. Shop Drawing format in accordance with NAAWS Section 1, Submittals and WI's Certified Compliance Program.
      1) The shop drawings for the modular casework shall comply with and bear the WI CERTIFIED COMPLIANCE LABEL.
      2) Each elevation of casework, each laminated plastic top, and each solid surface top shall bear a WI CERTIFIED COMPLIANCE LABEL.
      3) Indicate spacing of all hardware accessories for Architect's review of layout.
      4) On casework and countertop elevations show the location of backing required for attachment within walls.
      5) Before delivery to the jobsite the woodwork supplier shall provide a WI CERTIFIED COMPLIANCE CERTIFICATE indicating the millwork products being supplied and Certifying that these products fully meet the requirements of the Grade or Grades specified.
      6) At completion of installation the woodwork installer shall provide a WI CERTIFIED COMPLIANCE CERTIFICATE indicating the products installed, and Certifying that the installation of these products fully meets the requirements of the Grade or Grades specified.
      7) All fees charged by the Woodwork Institute for their Certified Compliance Program are the responsibility of the millwork manufacturer and/or installer and shall be included in their bid

3. Samples.
   a. Provide nominal 2" x 3" sample chains of manufacturer's Transparent Wood Finishes to match existing cabinetry.
      1) Coordinate with Specification Section -- PAINTING, and submit color samples of manufacturers full color range of transparent finishes for the wood species to match existing.
   b. Provide nominal 2" x 3" sample chains of manufacturer's non-premium and premium laminate color selection lines.
      1) Submit color samples of Manufacturer's full color and pattern range (including wood grains) of non-premium and premium priced High Pressure Decorative Laminate to the Architect for color selection prior to fabrication.
         a) See drawings for high pressure decorative laminate color selection.
      2) Submit color samples of high density overlay thermal-fused melamine for color selection by the Architect.
         a) Samples shall be equivalent to SELPLY products, from their full color range selection chain of colors.
      3) Provide finish color selection samples of Pilaster Standard. Specified colors subject to change.
   c. Mock-up as described elsewhere in this section.
4. Quality Assurance/Control Submittals:
   a. Certificates:
      1) Submit three (3) copies of the following:
         a) Before delivery to the jobsite, the modular cabinetwork supplier shall issue a WI CERTIFIED COMPLIANCE CERTIFICATE indicating the modular cabinetwork products and/or fabrication of products to be furnished for this project shall meet fully all the requirements of the grade or grades specified.
         b) Upon completion of inspection of installation by WI Inspector, a WI CERTIFIED COMPLIANCE CERTIFICATE shall be furnished for the installation.
      2) Submit three (3) copies of a letter on Contractor's Letterhead certifying work provided, meets or exceeds, the requirements of this Section.
   b. Labels:
      1) Each plastic laminate countertop supplied shall bear the WI CERTIFIED COMPLIANCE LABEL.

1.6 QUALITY ASSURANCE

A. Qualifications:
   1. Material Qualifications:
      a. Grades as indicated on the drawings in accordance with the specifications, rules and details or casework of the NAAWS Sections 5 "Finishing", 10 "Casework", and 11 "Countertops", unless the drawings and these specification modify said standards.
         1) See Appendix "A" for "Cabinet Design Series" (CDS) Number System used on Modular Casework Schedule.
      b. Laminated Plastic Countertops, Splashes, and Wall Paneling in accordance with NAAWS Section 11 "Countertops".
   2. Installer Qualifications:

a. Engage an experienced Installer who has successfully completed three (3) projects of similar scope and size to that indicated for this Project.

3. Manufacturer/Supplier Qualifications:
   a. Firm(s) experienced in successfully producing/supplying products similar to that indicated for this Project, with sufficient production/supply capacity to produce/supply required units without causing delay in the work.
   b. All modular Cabinet Work must be done by a Single Source WI licensed manufacturer and be able to provide a WI Certified Compliance Certificate.
   c. Participation in Woodwork Institute Quality Assurance Program:
      1) If supplier is WI Member Licensee in good standing:
         a) Comply with WI CERTIFIED COMPLIANCE PROGRAM (CCP).
         b) Provide WI Director to inspect installation on-site.
      2) If supplier is not WI Member Licensee in good standing:
         a) Comply with WI MONITORED COMPLIANCE PROGRAM (MCP).

B. Regulatory Requirements:
   1. In accordance with Specification Section - REGULATORY REQUIREMENTS, and the following:
      a. CARB Materials and equipment used for this Project shall comply with the current applicable regulations of the California Air Resources Board (CARB) and the Environmental Protection Agency (EPA), in the area where the project is located.
      b. CBC All hardware for casework shall meet CBC Section 11B-309.4 and 11B-811.4.

C. Mockups:
   1. Prior to fabricating or installing Modular Cabinet Work, construct a mockup to verify selections made under sample submittals and to demonstrate aesthetic effects as well as qualities of materials and execution. Provide one lower cabinet with drawer, and one upper cabinet, with all examples of hardware for both lower and upper cabinets.
   2. Provide mock-up of exposed and interior cabinet surfaces with Pilaster Shelf Standard for review and comment prior to fabrication. Color selection of Pilaster may be subject to change.

D. Meetings:
   1. Pre-Installation: Scheduled by the Contractor prior to the start of work.
      a. Coordinate the work with all other related work
      b. identify potential problems that may impede planned progress and proper installation of work regarding quality of installation and warranty requirements.
      c. Review the locations of backing required for casework installation as shown on the casework shop drawings and the Contract Documents.
      d. Review the method of attachment of the backing to the wall system as shown on the Contract Documents.
   2. Progress: Scheduled by the Contractor during the performance of the work.
      a. Review for proper installation of work progress.
      b. Identify any installation problems and acceptable corrective measures.
      c. Identify any measures to maintain or regain project schedule if necessary.
   3. Completion: Scheduled by the Contractor upon proper completion of the work.
      a. WI Inspector, Project Inspector, and the Architect shall inspect and identify any problems that may impede issuance of warranties or guaranties.

b. Maintain installed work until the Notice of Substantial Completion has been executed.

1.7 DELIVERY, STORAGE, AND HANDLING

A. Packing, Shipping, Handling, and Unloading:
1. Products shall be handled in such a manner as to assure that they are free from dents, scratches and other damage.

B. Acceptance at Site:
1. Hardware products (not already applied) must be in manufacturer's original unopened containers with labels indicating brand name, model, and grade.
2. Casework products must be free from scratches, gouges, or any other marring or discoloration.
3. Damaged products will not be accepted.

C. Storage and Protection:
1. Products shall be stored above ground on level platforms, six (6) inches above ground, allowing air circulation under stacked units, in compliance with PROJECT CONDITIONS below.
a. Cover materials with protective waterproof covering providing for adequate air circulation and ventilation.

1.8 PROJECT CONDITIONS

A. Environmental Requirements:
1. Humidity and Temperature: Maintain humidity and temperature in the space to receive products between 45 percent to 65 percent at a temperature of 60 degrees to 90 degrees F. Equilibrium Moisture Content of the wood product conditions shall be maintained between 8 percent and 12 percent. Maintain these requirements for four (4) days minimum prior, during, and following installation in accordance with manufacturer's written recommendations. Inform the Owner of humidity requirements for products installed and maintain until Substantial Completion and the turn-over of the building or facility to the Owner.

1.9 WARRANTY

A. Contractor's General Warranty:
1. In accordance with Specification Section - WARRANTIES.

B. Manufacturer's Warranty:
1. In accordance with manufacturer's written standard warranty:
a. Warranty Period One (1) Year.

C. Installer's Warranty:
1. In accordance with the terms of the Specification Section - WARRANTIES
a. Warranty Period One (1) Year.

PART 2 - PRODUCTS

2.1 MANUFACTURERS

A. These products listed herein establish the size, pattern, color range and function selected by the Architect for this Project. Manufacturers that are listed as acceptable alternative manufacturers and substitutions must still comply with the requirements of this project and the products listed in order to be approved as an equivalent during the Submittal Process. If the acceptable alternative manufacturers listed or substitutions are not approved during the Submittal Process due to non-compliance with the contract documents, then the Contractor shall submit product specified.
   1. Specified product manufacturers:
      a. High Pressure Decorative Laminate: WILSONART.
         1) Cabinet Liner Series Type CLS.
      b. Low Pressure Thermal-fused:
         1) AMERICAN LAMINATE, PANELAM, or ROSEBURG FOREST PRODUCTS.
      c. Cabinetry Hardware: See Cabinet Hardware Schedule.
      d. Countertop Support Brackets RAKKS.

B. Products from other manufacturers not listed must submit in accordance with Specification Section - SUBSTITUTION PROCEDURES.

2.2 CABINET MATERIALS

A. Exposed Materials:
   1. General:
      a. In accordance with NAAWS Section 4 - Sheet Products.
      b. Minimize seams.
   2. Laminate Systems:
      a. Decorative Laminate:
         1) Horizontal Surfaces: Post-formed Grade HGP (0.042").
         2) Vertical Surfaces: Grade VGP (0.027").
            a) Pattern direction: Vertical, unless otherwise noted.
      b. Edgebanding:
         1) Rigid PVC extrusions, through color with satin finish, 3 mm thick at doors and drawer fronts, 0.5 mm thick elsewhere. Color to match adjacent material.

B. Semi-Exposed Materials:
   1. Cabinet Liner:
      a. Complying with requirements of NEMA LD-3, Grade CLS.
   2. Edgebanding:
      a. Rigid PVC extrusions, through color with satin finish.
         1) Typical: 0.5 mm thick.
         2) Front edge of shelves and all edges of drawers: 3 mm.

C. Concealed Materials:

1. Particleboard: ANSI A208.1, Grade M-2.
   a. 44-50 lb Industrial Grade core.
   b. Thickness Swell max: 5.5 percent.
2. Veneer Core Hardwood Plywood (VCHP):
   a. No internal voids.
   b. MDF cross bands to limit telegraphing of core grain is acceptable.

D. Fasteners:
1. Per NAAWS.
2. Corrosion resistant fasteners throughout the assembly of modular casework.
3. Confirmat screws.

2.3 FABRICATION

A. General:
1. In accordance with NAAWS Section 10 - Casework, Custom Grade, as amended by the Contract Documents.
2. Interface Style, Frameless: Flush Overlay.
3. Seismic Force Requirements - The types of construction approved by WI that meet CBC Title 24 seismic force requirements are: Lock Joint, Dowled, Dowled / Screwed Construction, Rabbeted Construction, Confirmat Screws, Fully Plowed-in Back, and Backs Screwed on in rabbeted ends, tops, and bottoms. The exact method for seismic force construction is available from WI.
4. Construct openings and backing as required for work done under Division 22 PLUMBING (sinks, plumbing, etc.) and Division 26 ELECTRICAL (outlets, switches, wiring, etc).
   a. Exposed Edges: All exposed edges shall be sealed; including sink cut-outs & bottom edges of front edges.
5. Cabinets ganged together or attached to the wall shall be attached with countersunk screws to prevent binding of shelves when provided later.
6. Any vertical or horizontal plane surface less than four (4) foot wide and twelve (12) foot long shall be faced with one continuous sheet with the intent to minimize the number of seams throughout the work, in compliance with NAAWS Section 8 "Wall Surfacing".

B. Cabinets:
1. Cabinet box:
   a. Bottoms and Ends of Cabinets: 3/4-inch particleboard.
   b. Tops of Wall Cabinets and Tall Cabinets: 3/4-inch particleboard.
   c. Backs of Cabinets: Particleboard.
      1) Concealed Backs: 1/4" minimum.
      2) Exposed Backs: 1/2" minimum.
2. Filler Strips:
   a. Provide as needed to close spaces between cabinets and walls, ceilings, and indicated equipment. Fabricate from same material and with same finish as cabinets.
3. Shelving System:
   a. Shelf Support System:
      1) Bored Hole Shelf Rest Systems:
         a) 5mm diameter holes drilled approximately 8 mm deep, 32 mm o.c.

b) The front and rear row of holes shall be 37 mm from the front and rear edge of the cabinet.
c) Provide full cabinet height holes at 32 mm o.c. in each row to allow maximum flexibility of the user to arrange shelves.
2) Provide four clips for each shelf.
b. Shelves: Veneer Core Hardwood Plywood.
1) Span less than 25-inches: 3/4-inch.
2) Span greater than 25-inches: 1-inch.
3) Library shelves of any span: 1-inch thick.
4. Doors:
a. Core material: Particleboard.
b. Doors 48 inches high or less: 3/4 inch thick.
c. Doors more than 48 inches high: 1-1/8 inches thick.
d. Doors more than 80 inches high: 4 hinges, minimum.
e. Stiles and Rails of Glazed Doors: 3/4 inch thick.
f. Let in 1/8" reveals for institutional hinges.
5. Drawers:
a. Drawer Fronts: 3/4-inch Particleboard.
b. Drawer Sides and Backs: 1/2-inch Veneer-Core Hardwood Plywood.
1) Joined using Confirmat Screws in lieu of dowels.
c. Drawer Bottoms: 1/2-inch Veneer-Core Hardwood Plywood glued and dadoed into front, back, and sides of drawers.
d. File Drawers / Lateral File Drawers:
1) Sides: 3/4-inch Veneer-Core Hardwood Plywood.
2) Bottoms: 5/8 inch Veneer-Core Hardwood Plywood.
3) Sides and bottoms shall be secured using 2-inch Confirmat screws.
e. Security Panels: 1/2-inch Veneer-Core Hardwood Plywood.
1) Provide Security Panels above and below all locking drawers.
6. All drawers and doors shall be locked, keyed alike in each room and with building masters and grand master.
a. Each room shall be keyed alike:
1) Provide 4 keys per lock.
2) Provide 6 master keys.

C. Countertops:
1. General: In accordance with NAAWS Section 11 -- Countertops, as amended by the Contract Documents.
2. Laminate Countertops:
a. Standard: In accordance NEMA standard LD-3.
b. Strength: 3/16 inch maximum deflection with 150 pound load at midspan.
c. Surface Material: Plastic Laminate.
d. Backing Material: Cabinet Liner.
e. Core: 3/4-inch Particleboard.
f. Front Edge: Self-edge build-up with drip groove edge.
g. Back Splash: 6 inch integral cove splash, unless otherwise indicated on the drawings.
h. End Splash: 6 inch butt end splash, unless otherwise indicated on the drawings.
i. Top of Splash: Square Edge.
j. Exposed Edges: All exposed edges shall be sealed; including sink cut-outs & bottom edges of front edges.

D. Fabrications:
   1. Solid Surface:
      a. Various locations: Thickness as noted on drawings.
      b. Wall cladding: 1/4 inch thick unless otherwise noted.
   2. Plastic:
      a. Pre-fabricated.
      b. Field Fabricated.

E. Hardware:
   1. See schedule at the end of this section for typical cabinet hardware.
   2. Hardware shall be furnished and installed as required to provide a complete casework installation for overlay construction, unless noted otherwise.
   3. Provide metal strike at locks.
   4. Finish: BHMA 626 (26D), unless otherwise noted.

F. Countertop Supports
   1. RAKKS (EH Series Counter Support Brackets):
      a. EH-1818 for counter depths up to 25"; suitable for surface mounted conditions.
      b. EH-1824 for counter depths up to 30"; suitable for surface mounted conditions.
      c. EH-1818FM for counter depths up to 25"; suitable for flush mounted conditions.
      d. EH-1824FM for counter depths up to 30"; suitable for flush mounted conditions.

PART 3 - EXECUTION

3.1 EXAMINATION

A. Site verification of conditions:
   1. Prior to the execution of the work under this specification section, inspect the installed work executed under other specification sections of this Project Manual, which affect the execution of work under this specification section.
   2. Report unacceptable conditions to the Architect. Do not begin work until unacceptable conditions have been corrected.
   3. Execution of work under this specification section shall constitute acceptance of existing conditions.

3.2 PREPARATION

A. Coordination:
   1. Coordinate work under this specification section with work specified under other specification sections to ensure proper and adequate interface of work specified under this specification section.

B. Protection:
   1. Protect all adjacent surfaces from drips, spray, air pollution of surrounding environment, and other damage from work under this specification section.

C. Surface preparation:

1. Prepare surface in accordance with manufacturer's written instructions and recommendations.
2. Clean substrates of substances (oil, grease, rolling compounds, incompatible primers, loose mill scale, etc.) which could impair bond of materials specified within this section.

3.3 INSTALLATION

A. General:
1. In accordance with manufacturer's written instructions and recommendations unless specifically noted otherwise.
   a. Provide experienced, factory trained craftspeople under manufacturers direct supervision.
2. In accordance with approved submittals.
3. In accordance with Regulatory Requirements.
4. The entire installation shall present a first class, workmanlike appearance, without open joints, tool marks or other blemishes, and subject to the Architect's approval.
5. Edges of cutouts, subject to excessive moisture, shall be sealed with a color-toned (for verification), water-resistant sealer before trim or sink rims are installed.

B. Layout:
1. Set plumb, level, and to true lines as shown on the drawings.
2. Filler panels and scribe strips or moldings, as required, shall be properly scribed to adjacent work and securely attached to cabinets as indicated on the drawings.

C. Anchorage:
1. The backs of the cabinets shall be secured to the wall backing.
2. Refer to the Drawings for the backing and anchorage details.
3. As a minimum, each cabinet shall be secured to the backing with a total of four #14 screws.

D. Cabinet Bases:
1. Toe Kick: Cabinet base shall be set back from the face of the cabinet 3-inches, or as indicated
2. Cabinet sides: Cabinet shall be set 3/8-inch back from the face of the cabinet.

3.4 FIELD QUALITY CONTROL

A. Inspection:
1. Schedule WI inspection with a minimum of 7 days notice of planned installation.
2. Schedule inspections and notify the Architect, Owner's Project Inspector and any other regulatory agencies of the time at least 48 hours prior to the inspection.
3. No work shall be without the inspections required by Regulatory Requirements.

3.5 ADJUSTING

A. Test and adjust carpentry hardware. Replace damaged or malfunctioning controls and equipment.

3.6 CLEANING

A. Clean in accordance with Specification - PROJECT CLOSEOUT.
   1. Clean any soiled surfaces immediately.
   2. In accordance with manufacturer's written instructions and recommendations.
   3. Finish shall be clean and ready for the application of any additional finishes.

3.7 PROTECTION

A. Protection from traffic:
   1. Provide final protection and maintain conditions, in a manner acceptable to manufacturer and installer, which ensures the work of this section being without damage or deterioration until the time of Substantial Completion.

3.8 SCHEDULES

A. Standard Cabinetry Hardware specified, or approved equivalent:
   1. Hinges: Institutional Hinges for Overlay doors, 2-3/4" five knuckle with hospital tips and 2-5/8" extended side panel wing:
      a. ROCKFORD PROCESS:
         1) #374 for 3/4" x 3/4" thicknesses.
         2) #376 for 3/4" x 13/16" thicknesses.
   2. Pulls (Steel Wire "U" Shaped - 4" centers, 1-1/4" Projection from face of drawer or door):
      a. JAMISON: SWP4-26D.
   3. Locks (Hinged Doors and Drawers for Overlay Construction):
      a. COMP X NATIONAL: #C8053.
      b. Approved equivalent manufacturer:
         1) OLYMPUS LOCK, INC. #DCN as required.
      c. Provide compatible strike.
      d. OLYMPUS LOCK, INC. #DCN as required.
      e. Approved equivalent manufacturer:
         1) COMP X NATIONAL: #C8053.
      f. Provide compatible strike.
   4. Locks (Sliding Doors):
      a. COMP X NATIONAL: #C8142 (3/4").
      b. Approved equivalent manufacturer:
         1) KNAPE AND VOGT.: #KV984.
      c. Provide compatible strike.
   5. Locks (Sliding Glass Doors):
      a. COMP X NATIONAL: #C8140 (1/4").
      b. Approved equivalent manufacturer:
         1) KNAPE AND VOGT: #KV965.
      c. Provide compatible strike.
   6. Drawer Slides up to 24 inches Wide:
      a. Pencil Drawers:
         1) 65 lb capacity, full extension, lever disconnect:

a) ACCURIDE 2632.

2) Approved equivalent manufacturer:

a) KNAPE AND VOGT: 4400.

b. General Purpose Drawers:

1) 100 lb capacity, full extension, rail mount disconnect:

a) ACCURIDE 7432.

2) Approved equivalent manufacturer:

a) KNAPE AND VOGT: 8400.

c. File Drawers:

1) 150 lb capacity, full extension, rail mount disconnect:

a) ACCURIDE 4032.

2) Approved equivalent manufacturer:

a) KNAPE AND VOGT: 8500.

7. Drawer Slides over 24 inches Wide:

a. Pencil Drawers:

1) 100 lb capacity, full extension, push latch disconnect:

a) ACCURIDE 3732.

2) Approved equivalent manufacturer:

a) KNAPE AND VOGT: 8400.

b. General Purpose Drawers:

1) 150 lb capacity, full extension, rail mount disconnect:

a) ACCURIDE 3641.

2) Approved equivalent manufacturer:

a) KNAPE AND VOGT: 8500.

c. File Drawers:

1) 200 lb capacity, full extension, rail mount disconnect:

a) ACCURIDE 3642.

2) Approved equivalent manufacturer:

a) KNAPE AND VOGT: 8800.

8. File Frames for File Drawers & Lateral File Drawers.

a. COMPX TIMBERLINE File Frame System.

9. Adjustable Shelf Supports (zinc die-cast nickel plated supports) for glass shelves:

a. HETTICH: #1 010 564.

10. Adjustable Shelf Pilaster Standard and Shelf Supports:

a. Pilaster Standard shall be KNAPE & VOGT #255, 19-gage x 5/8" wide x 3/16" high.

1) #255-WH (Epoxy-Coated White) at interior cabinet surface locations.

2) #255-BRN (Brown) at exposed cabinet surface locations.

b. Shelf Supports shall be KNAPE & VOGT #239 ZC (Zinc Coated).

11. Magnetic Catcher:

a. AMEROCK: #CM9783-AL.

b. Approved equivalent manufacturer:

1) KNAPE AND VOGT: #918-AL.

12. Wardrobe Clothes Pole:

a. KNAPE AND VOGT, Pole, 1-1/16"O.D., I.D. 29/32" SS tubing : #KV660.

b. KNAPE AND VOGT Wall Supports per tube length : #KV734 and #KV735.

13. Exposed Fasteners: When exposed fasteners are used, provide zinc chromate coated oval head, self-tapping phillips screws with grommet finishing washers, same finish as screws.

14. Tote Trays: High impact polystyrene with cardholder, 4-1/4 x 12-3/4 x 18-3/4 inch size.

15. Hinged Glass Doors:
    a. 7/32 inch crystal sheet installed in accordance with WI Section 15.
16. Sliding Glass Doors:
    a. 7/32 inch crystal sheet installed in accordance with WI Section 15.
    b. Top and bottom metal tracks:
        1) Doors up to 24"w x 42"h: KNAPE AND VOGT #1092.
        2) Doors larger than 24"w x 42"h: KNAPE AND VOGT #992.
17. Casters: All swivel, 2 non-braking and 2 braking, with non-marking 5 inch diameter rubber wheels, manufacturer's standard finish.
    a. FAULTLESS: #BP421-5 and #BP421-5RB.
18. Joint Closure:
    a. PEMKO: #313AN.
19. Coat Hooks (Cast aluminum wardrobe hook):
    a. IVES: #E IVSP581A3.
20. Exposed Fasteners: When exposed fasteners are used, provide zinc chromate coated oval head, self-tapping phillips screws with grommet finishing washers, same finish as screws.
21. Cabinet Catch (only when indicated on the drawings)
    a. STANLEY #CD34.
22. Label Plate:
    a. HAFELE #168.02.761.
23. Grommets, Cable Managers and Cabinet Vents:
    a. Provide grommets, cable managers and cabinet vents in various sizes, finishes and shapes, as indicated on the drawings and as otherwise required for a complete installation.
    b. Provide type S/S-3 Grommet for all conditions not noted. Grommets & Air Vents by DOUG MOCKETT & COMPANY, INC., or approved equivalent.
    c. A partial listing is provided below (for other listings, see the drawings):
        1) Wire Manager: #WN-2A.
        2) Hair Dryer Holder at Printer Counter: #HD-1.
24. Miscellaneous Hardware Items:
    a. DEMCO, INC.:
        1) Maple Newspaper Sticks: #EP148-7821.
        2) Keyboard Drawer: #P148-0061.
    b. HAFELE:
        1) Bow Handles: #102.49.402.
        2) Compact Disk Rails: #810.58.335.
        3) Video Cassette Rails: #810.58.326.
        4) Metal Label Frames: E168.02.789 (nickel-plated).
        5) Miscellaneous: Dished Sleeves, screws, washers, nuts, threaded pins, screw-in sleeves, shelf supports with locking screws, connecting fittings, & capped bolts.
    c. NOVA:
        1) Mobil Pedestal: #85 series.
        2) Retrofit Kit: E50-0-1818.
    d. REV-A-SHELF:
        1) Cutlery / Utility Trays: CT4.
    e. CHARLES McMURRAY:
        1) 2" Plate Casters: #MC660-44-273.

B. Hardware list at Modular Music Instrument Cabinets:

1. Hinges:
   a. ROCKFORD PROCESS.
      1) #374 for 3/4" x 3/4" thicknesses.
      2) #376 for 3/4" x 13/16" thicknesses.
   b. Up to 48" high Doors: 3 hinges unless otherwise indicated on the drawings.
   c. 48" to 80" high Doors: 4 hinges unless otherwise indicated on the drawings.
   d. Door higher than 80": 5 hinges unless otherwise indicated on the drawings.
2. Catches: HAFELE 246.03.709 magnetic catch.
3. Pulls: HAFELE 105.25.603 metal pull.
4. Lock Hardware: As detailed on the drawings.
5. Identification: HAFELE 168.01.460 transparent label frame (70 mm x 23mm).

END OF SECTION

SECTION 097200 - WALL COVERINGS

PART 1 - GENERAL

1.1 SUMMARY

A. This Section includes the following:
   1. Provide all materials, labor, equipment and services necessary to furnish and install Vinyl Covered Tackboard Panels, accessories and other related items necessary to complete the Project as indicated by the Contract Documents unless specifically excluded

B. Related Sections: The following Project Manual Sections contain requirements that relate to this section:
   1. ALL DIVISION 00 SPECIFICATION SECTIONS.
   2. ALL DIVISION 01 SPECIFICATION SECTIONS.
   3. 06 41 23 MODULAR CASEWORK
   4. 10 11 00 VISUAL DISPLAY BOARDS
   5. 10 44 00 FIRE PROTECTION SPECIALTIES
   6. ALL SPECIFICATION SECTIONS IN THE FACILITY SERVICES SUBGROUP.

1.2 SUBMITTALS

A. Submit in accordance with Specification Section - SUBMITTAL PROCEDURES:
   1. Product Data.
      a. Submit manufacturer's full color range (including any standard, premium and custom colors) of all Wall Coverings for selection by the Architect.
   2. Samples.
      a. Provide 6 inch square sample of each Wall Covering product for color and pattern selected.
      b. Provide 6 inch lineal samples of each Wall Covering trim material specified.
      c. Custom Graphic Vinyl Wall Covering samples:
         1) Submit one reduced scale color proof showing the overall image of each mural for approval prior to manufacture.
         2) Submit 24" x 24" min. ground strike-off of each mural design for approval prior to manufacture.
         3) Submit memo size samples cut from current production of ground wall covering selected to demonstrate quality, weight and embossing.
   3. Closeout Submittals in accordance with the following:
      a. Warranty in accordance with Specification Section - WARRANTIES.

1.3 QUALITY ASSURANCE

A. Qualifications:
   1. Installer Qualifications:
      a. Engage an experienced Installer who has successfully completed three (3) projects of similar scope and size to that indicated for this Project.

b. Engage an experienced Installer who is certified in writing by the manufacturer listed herein as qualified to install manufacturer's product (or system) in accordance with manufacturer's warranty requirements.

2. Manufacturer/Supplier Qualifications:
   a. Firm experienced in successfully producing/supplying products similar to that indicated for this Project, with sufficient production/supply capacity to produce/supply required units without causing delay in the work.

B. Regulatory Requirements:
1. In accordance with Specification Section - REGULATORY REQUIREMENTS, and the following:
   a. CARB Materials and equipment used for this Project shall comply with the current applicable regulations of the California Air Resources Board (CARB) and the Environmental Protection Agency (EPA), in the area where the project is located.
   b. CBC California Building Code (CBC 803.1.1).

1.4 DELIVERY, STORAGE, AND HANDLING

A. Packing, shipping, handling, and unloading:
1. Products shall be individually wrapped.
2. Products shall be handled in such a manner as to assure that they are free from dents, scratches and other damage.

B. Acceptance at Site:
1. Products must be in manufacturer's original unopened containers with labels indicating brand name, model, and grade.
2. Damaged products will not be accepted.

C. Storage and protection:
1. Products shall be stored above ground on level platforms, six (6) inches above ground, allowing air circulation under stacked units.
   a. Cover materials with protective waterproof covering providing for adequate air circulation and ventilation.

1.5 PROJECT CONDITIONS

A. Environmental requirements:
1. Temperature: Maintain ambient temperature in space to receive products between sixty (60) degrees Fahrenheit and eighty (80) degrees Fahrenheit for three (3) days prior, during, and three (3) days minimum following installation. Inform the Owner of ambient temperature requirements for products installed and maintain until Substantial Completion and turn-over of the building or facility to the Owner.

B. Existing Conditions:
1. Examine site and compare it with the drawings and specifications. Thoroughly investigate and verify conditions under which the work is to be performed. No allowance will be made for extra work resulting from negligence or failure to be acquainted with all available information concerning conditions necessary to estimate the difficulty or cost of the work.

1.6 SCHEDULING

A. Custom Graphic Wallcovering: Verify lead time with manufacturer. Assume no less than six week lead time from approved submittals.

1.7 WARRANTY

A. Contractor's General Warranty:
   1. In accordance with Specification Section - WARRANTIES.

B. Manufacturer’s Warranty:
   1. In accordance with manufacturer's written standard warranty:
      a. Warranty Period One (1) Year.

C. Installer's Warranty:
   1. In accordance with the terms of the Specification Section - WARRANTIES:
      a. Warranty period One (1) Year.

PART 2 - PRODUCTS

2.1 MANUFACTURERS

A. These products listed herein establish the size, pattern, color range and function selected by the Architect for this Project. Manufacturers that are listed as acceptable alternative manufacturers and substitutions must still comply with the requirements of this project and the products listed in order to be approved as an equivalent during the Submittal Process. If the acceptable alternative manufacturers listed or substitutions are not approved during the Submittal Process due to non-compliance with the contract documents, then the Contractor shall submit product specified.
   1. Specified Vinyl Covered Tackboard product manufacturer:
      a. CHATFIELD-CLARKE COMPANY, INC., a Divison of KOROSEAL WALLCOVERINGS, as distributed through WESTERN BUILDING MATERIALS.
      b. Acceptable alternative manufacturers:
         1) KOROSEAL SCHOOL COLLECTION as manufactured by KOROSEAL WALLCOVERINGS, as distributed through WESTERN BUILDING MATERIALS.
         2) LAMVIN INC.

B. Products from other manufacturers not listed must submit in accordance with Specification Section - SUBSTITUTION PROCEDURES.

2.2 MATERIALS

A. Vinyl Covered Tackboard:
   1. Tackboard Size: 1/2" x 48" wide by maximum practical height to minimize joints.

a. Wood fiber substrate tackboard shall be 1/2" thick, cellulose fiberboard sheathing, beveled side edges and square end edges, in accordance with ASTM C 208 “Specification for Cellulosic Fiber Insulating Board”, complying with the minimum standards listed below:
   1) Weight, lb/1000 ft^2 640.
   2) Transverse strength, lbf 14.5.
   3) Tensil Strength, lb/in^2 242.
   4) MOR, lb/in^2 380.
   5) "k" Factor 0.37.
   6) Maximum Flame Spread - Class B 75.
   7) Maximum Smoke Developed - Class B 175.

2. Finish: Architect to select from manufacturer's standard textures and colors from the following series: Type I, Group 1.
   a. All vinyls used are to be 15 oz. total weight per lineal yard (Type I) with a cloth backer to insure consistent emboss.
      1) Class A vinyls shall be tested in accordance with ASTM E 84 "Standard Test Method for Surface Burning Characteristics of Building Materials", with the following maximum requirements:
         a) Maximum Flame Spread - Class A 25.
         b) Maximum Smoke Developed - Class A 5.
3. Edge:
   a. Beveled, long side edges with vinyl wrapped to back side. Short end edges to be square cut with vinyl flush with end of substrate board.
4. Accessories:
   a. Provide vinyl covered PVC moldings in the following configurations: edge, inside and outside corner, and intermediate splice moldings. Provide colors to match the field panels. Use of moldings and locations shall be indicated on the drawings.
5. Overall panel when wrapped with Class A vinyls shall meet flame spread and smoke developed index approval in accordance with ASTM E 84 "Standard Test Method for Surface Burning Characteristics of Building Materials", as follows:
   a. Maximum Flame Spread - Class B 75.
   b. Maximum Smoke Developed - Class B 175.
6. Adhesive:
   a. In accordance with tackboard panel manufacturer's written recommendations, and in compliance with CARB Standards and VOC requirements.

PART 3 - EXECUTION

3.1 EXAMINATION

A. Site verification of conditions:
   1. Prior to the execution of the work under this specification section, inspect the installed work executed under other sections of this Project Manual, which affect the execution of work under this specification section.
   2. Report unacceptable conditions to the Architect. Do not begin work until unacceptable conditions have been corrected.
   3. Execution of work under this specification section shall constitute acceptance of existing conditions.

3.2 PREPARATION

A. Coordination:
   1. Coordinate work under this specification section with work specified under other sections to ensure proper and adequate interface of work.

B. Protection:
   1. Protect all adjacent surfaces from drips, spray, air pollution of surrounding environment, and other damage from work under this specification section.

C. Surface preparation:
   1. Prepare surface in accordance with manufacturer's written instructions and recommendations.
   2. Clean substrates of substances (oil, grease, rolling compounds, incompatible primers, loose mill scale, etc.) which could impair bond of materials specified within this section.

3.3 INSTALLATION

A. General:
   1. In accordance with manufacturer's written instructions and recommendations unless specifically noted otherwise.
   2. In accordance with approved submittals.
   3. In accordance with Regulatory Requirements.
   4. Set plumb, level, and square.

B. Layout:
   1. Lines shall be straight and true.

3.4 FIELD QUALITY CONTROL

A. Inspection:
   1. As required by Regulatory Requirements.
   2. Schedule inspections and notify the Architect, Project Inspector and any other regulatory agencies of the time at least 48 hours prior to the inspection.
   3. No work shall be without the inspections required by Regulatory Requirements.

3.5 CLEANING

A. Clean in accordance with Specification Section - PROJECT CLOSEOUT.
   1. Clean any soiled surfaces immediately.
   2. Finish shall be clean and ready for the application of any additional finishes.
   3. In accordance with manufacturer's written instructions and recommendations.

END OF SECTION

SECTION 100500 – MISCELLANEOUS SPECIALTIES

PART 1 - GENERAL

1.1 SUMMARY

A. This Section includes the following:
   1. Provision for and installation of specialty and built-in items required for this Work as indicated on the Drawings.

B. Related Sections: The following Sections contain requirements that relate to this Section:
   1. ALL DIVISION 00 SPECIFICATION SECTIONS.
   2. ALL DIVISION 01 SPECIFICATION SECTIONS.
   3. 03 30 00 CAST-IN-PLACE CONCRETE
   4. 06 10 00 ROUGH CARPENTRY
   5. 06 41 23 MODULAR CASEWORK
   6. 09 72 00 WALL COVERINGS
   7. ALL SPECIFICATION SECTIONS IN THE FACILITY SERVICES SUBGROUP.
   8. ALL SPECIFICATION SECTIONS IN THE SITE AND INFRASTRUCTURE SUBGROUP.

1.2 SYSTEM DESCRIPTION

A. Performance Requirements: It is the intention of this section and the drawings to form a guide for a complete and operable system of all products or systems listed within this specification section. Any items not specifically noted but necessary for a complete and operable product or system shall be provided under this section.

1.3 SUBMITTALS

A. Submit in accordance with Specification Section - SUBMITTAL PROCEDURES:
   1. Shop Drawings:
      a. Submit Shop Drawings and catalog cuts to the architect showing all details of installation and assembly and all requirements for work by other trades.
   2. Product Data:
      a. Submit manufacturer's full color range (including any standard, premium and custom colors) for selection by the Architect.

1.4 DELIVERY, STORAGE, AND HANDLING

A. Storage and protection:
   1. Use all means necessary to protect all specialty items before, during and after installation and to protect the installed work and materials of all other trades.

B. Replacements:

1. In the event of damage, immediately make all repairs and replacements necessary to the approval of the Architect at no additional cost to the Owner.

1.5 PROJECT CONDITIONS

A. Existing Conditions:
   1. Surface Conditions:
      a. Coordination: Coordinate with all other trades as required to ensure proper and adequate provision in framing and wall finish for the installation of the selected specialties in the locations required.
   2. Inspection:
      a. Prior to Installation, inspect all specific locations and verify that all necessary provisions have been made.
      b. In the event of discrepancy, immediately notify the Architect.
      c. Do not proceed with installation in areas of discrepancy until all such discrepancies have been fully resolved.

1.6 WARRANTY

A. Contractor's General Warranty:
   1. In accordance with Specification Section - WARRANTIES.

B. Manufacturer's Warranty:
   1. In accordance with manufacturer's written standard warranty:
      a. Warranty Period One (1) Year.

C. Installer's Warranty:
   1. In accordance with the terms of the Specification Section - WARRANTIES:
      a. Warranty period One (1) Year.

PART 2 - PRODUCTS

NOT APPLICABLE

PART 3 - EXECUTION

3.1 INSTALLATION

A. Install all specialty items where indicated on the Drawings and in full accordance with all pertinent regulations and the manufacturer's written recommendations, anchoring all components firmly in place for long life under hard use, and in accordance with IR (Interpretation of Regulations, "Division of the State Architect• ")Manual.

3.2 ADJUSTING

A. Upon completion of the installation, and as a condition of its acceptance, visually inspect the entire work of this Section, adjust all components for proper alignment and use, and touch up all abrasions and scratches to make them completely invisible.

3.3 SCHEDULES

A. All items shall be as scheduled or approved equivalent items as set forth in the Substitution Section of these specifications, and all provisions of Division 00 - GENERAL CONDITIONS, and the sections of Division 01.

B. Vertical Louver Blinds:
1. Provide vertical Louver Blinds, Model #EL "Elite Blind", as manufactured by LOUVERDRAPE, INC.
   a. Blinds are to be installed at all exterior windows.
   b. Blinds shall cover all glass areas. Field verify height of blinds before fabricating.
   c. Do not provide a bottom chain.
2. Installer shall be responsible to report to the Architect any clearance problems that would prevent proper operation of the blinds. Submittals shall include direction of draw and stacking locations.
   a. Vane Description: Unpreforated.
   b. Louver Width: 3-1/2 inches.
   c. Vane Material: PVC.
   d. Vane Profile: Curved.
   e. Vane Directional Control: Chain.
   f. Traversing Control: Manual with Chain.
   g. Draw: As indicated on the drawings.
   h. Mounting: Recessed Ceiling track as detailed.
   i. Color:
      1) As selected by Architect from manufacturer's full range of colors produced for vertical blinds specified.
   j. Flame Spread Index of PVC vane material: Class A per ASTM E 1264 "Classification for Acoustical Ceiling Products", with a Flame Spread of 20.
   k. Smoke Density Developed Index of PVC vane material: 205 in accordance with ASTM E 84 "Test Method for Surface Burning Characteristics of Building Materials".

END OF SECTION

SECTION 101100 – VISUAL DISPLAY BOARDS

PART 1 - GENERAL

1.1 SUMMARY

A. This Section includes the following:
   1. Provide all material, labor, equipment and services necessary to furnish and install Visual Display Boards and Tackboards, Accessories and other related items necessary to complete the Project as indicated by the Contract Documents unless specifically excluded.

B. Related Sections: The following Sections contain requirements that relate to this Section:
   1. ALL DIVISION 00 SPECIFICATION SECTIONS.
   2. ALL DIVISION 01 SPECIFICATION SECTIONS.
   3. 06 10 00 ROUGH CARPENTRY
   4. 09 72 00 WALL COVERINGS
   5. ALL SPECIFICATION SECTIONS IN THE FACILITY SERVICES SUBGROUP.
   6. ALL SPECIFICATION SECTIONS IN THE SITE AND INFRASTRUCTURE SUBGROUP.

1.2 SUBMITTALS

A. Submit in accordance with Specification Section - SUBMITTAL PROCEDURES:
   1. Samples:
      a. Submit one sample each of Manufacturer's standard finish colors (including standard, premium and custom colors).

1.3 QUALITY ASSURANCE

A. Regulatory Requirements:
   1. In accordance with Specification Section Regulatory Requirements, and the following:
      a. CARB Materials and equipment used for this Project shall comply with the current applicable regulations of the California Air Resources Board (CARB) and the Environmental Protection Agency (EPA), in the area where the project is located.
      b. AIES American and Illuminating Engineering Society.

1.4 WARRANTY

A. Contractor's General Warranty:
   1. In accordance with Specification Section - WARRANTIES.

B. Manufacturer’s Warranty:
   1. In accordance with manufacturer's written standard warranty:
      a. Warranty Period One (1) Year.

C. Installer's Warranty:
   1. In accordance with the terms of the Specification Section - WARRANTIES:
      a. Warranty period One (1) Year.

PART 2 - PRODUCTS

2.1 MANUFACTURERS

A. These products listed herein establish the size, pattern, color range and function selected by the Architect for this Project. Manufacturers that are listed as acceptable alternative manufacturers and substitutions must still comply with the requirements of this project and the products listed in order to be approved as an equivalent during the Submittal Process. If the acceptable alternative manufacturers listed or substitutions are not approved during the Submittal Process due to non-compliance with the contract documents, then the Contractor shall submit product specified.
   1. Specified product manufacturer, or approved equivalent:
      a. CLARIDGE PRODUCTS AND EQUIPMENT.
      b. Acceptable alternative manufacturers:
         1) AARCO PRODUCTS, INC.
         2) PLATINUM VISUAL SYSTEMS
            a) An ABC SCHOOL EQUIPMENT INC.

B. Products from other manufacturers not listed must submit in accordance with Specification Section - SUBSTITUTION PROCEDURES

2.2 MATERIALS

A. Liquid Marker Boards:
   1. Aluminum Framed:
      a. Facing Sheet: 24 gage Porcelain Enamel Steel for Liquid Marker Boards. "LCS" Series face sheet by CLARIDGE is an approved equivalent to the coating process itemized below.
         1) Exposed face to be three coat process of manufacturer's primer and ground coat.
         2) Concealed face to be two coat process of manufacturer's primer and ground coat.
         3) Fuse cover and ground coats to steel at the manufacturer's standard firing temperatures, but not less than 1200 degrees F.
      b. Core: 1/2 inch (minimum) particleboard complying with ANSI A 208.1, Grade 1-M-1, with manufacturer's standard 0.005 inch thick aluminum foil backing.
      c. Exposed Face Color: As selected from manufacturer's full color range of light-colored special writing surface with gloss finish intended for use with dry erase felt-tipped liquid markers.
      d. Adhesive: Manufacturer's written recommended standard moisture-resistant thermoplastic-type adhesive.
      e. See interior elevations and details on the drawings for sizes and locations.
   2. Stainless Steel Framed:
      a. Liquid Marker Boards as described herein.

b. See interior elevations and details on the drawings for sizes and locations.

B. Hardware (Type 1 Boards):

1. General: Fabricate frames and trim of not less than 0.062 inch thick 6063T-5 aluminum alloy, clear anodized finish, size and shape as indicated to suit type of installation. Provide straight, single-length units, keep joints to a minimum. Miter corners to a neat, hairline closure.
   a. Chalk Rail: 1/8 inch extruded shape as standard with the manufacturer.
   b. Joint Cover: 1/16 inch extruded "H" or "T" shapes.
   c. Map Rail: 1/16 inch extruded shape as standard with the manufacturer with End Stops.
   d. Flag Holder: Provide one per map rail.
   e. Map Rail Hooks: 24 gage steel, cadmium plated hooks at 24 inches on center with spring holder clips and laminated vinyl cork insert.
   f. Wall Clips Manufacturer's standard concealed support clips.
   g. Marker Trough: 1/8 inch extruded shape as standard with the manufacturer.
   h. Trim: 3/32 inch extruded angles or channels.

2.3 FABRICATION

A. Laminate facing sheet and backing sheet to core material under pressure with manufacturer's written recommended flexible, waterproof adhesive.

B. Assembly: Provide factory-assembled visual display board units except where filed-assembled units are required.

1. Make joints only where total length exceeds maximum manufactured length. Fabricate with the minimum number of joints, balanced around the center of ht board, as acceptable to the Architect.
2. Provide the manufacturer's standard vertical joint system between abutting sections of display boards.

C. Minimum lengths shall be 16 feet, in one piece, or as indicated on Drawings.

D. Fabricate "Horizontal Sliding Markerboards" as indicated on the drawings in accordance with manufacturer's written recommendations.

2.4 FINISHES

A. Comply with NAAMM "Metal Finishes Manual" for recommendations relative to application and designations of finishes.

PART 3 - EXECUTION

3.1 INSTALLATION

A. Deliver factory-built visual display board units completely assembled in one piece without joints, wherever possible. Where dimensions exceed panel size, provide 2 or more pieces of equal length as acceptable to the Architect. When overall dimensions require delivery in separate units, prefit components at the factory, disassemble for delivery, and make final joints at the site. Use splines at joints to maintain surface alignment.

B. Install units in locations and at mounting heights indicated and in accordance with the manufacturer's written instructions. Keep perimeter lines straight, plumb, and level. Provide grounds, clips, backing materials, adhesives, brackets, anchors, trim, and accessories necessary for a complete installation.

C. Coordinate with other sections for metal or wood backing.
   1. Contractor to coordinate all blocking required for sizes indicated on Drawings prior to enclosing stud cavities.

D. Install boards top and bottom with wall clips screwed to backing at 24 inches on center at blocking.

3.2 ADJUSTING

A. Verify that accessories required for each unit have been properly installed and that operating units function properly.

3.3 CLEANING

A. Clean units in accordance with the manufacturer's written instructions.

END OF SECTION

SECTION 101400 – IDENTIFYING DEVICES

PART 1 - GENERAL

1.1 SUMMARY

A. This Section includes the following:
   1. Provide all material, labor, equipment and services necessary to completely install all Identifying Devices, Acrylic Signs and Decals, materials, accessories and other related items necessary to complete the Project as indicated by the Contract Documents.

B. Related Sections: The following Sections contain requirements that relate to this Section:
   1. ALL DIVISION 00 SPECIFICATION SECTIONS.
   2. ALL DIVISION 01 SPECIFICATION SECTIONS.
   3. 03 30 00 CAST-IN-PLACE CONCRETE
   4. 06 10 00 ROUGH CARPENTRY
   5. ALL SPECIFICATION SECTIONS IN THE FACILITY SERVICES SUBGROUP.
   6. ALL SPECIFICATION SECTIONS IN THE SITE AND INFRASTRUCTURE SUBGROUP.

1.2 DEFINITIONS

A. Definitions pertaining to signage are as follows:
   1. Characters Shall mean all letters, numbers, symbols or pictograms.

1.3 SYSTEM DESCRIPTION

A. Design Requirements for Tactile Signage:
   1. Characters and Graphics:
      a. Finish and Contrast: Characters and their background shall have a non-glare finish. Characters shall contrast with their background, either light characters on a dark background or dark characters on a light background – CBC Section 11B-703.5.1, 11B-703.6.2, and 11B-703.7.1.
      b. Character Type: Characters on signs shall be raised 1/32 inch (0.794 mm) minimum and letters and numbers shall be sans serif uppercase characters accompanied by contracted (Grade 2) Braille complying with CBC Section 11B-703.3 and 11B-703.3.1.
      c. Character Size: Raised characters (letters and numbers) shall be a minimum of 5/8 inch (15.9 mm) and a maximum of 2 inches (51 mm) high.
      d. Pictorial symbol signs (pictograms): Pictorial symbol signs (pictograms) shall be accompanied by the verbal description placed directly below the pictogram. the outside dimension of the pictogram field shall be a minimum of 6 inches (152 mm) in height.

e. Character Placement: Characters and Braille shall be in a horizontal format. Braille shall be placed a minimum of 3/8 inch (9.5 mm) and a maximum of 1/2 inch (12.7 mm) directly below the tactile characters; flush left or centered. When tactile text is multilined, all Braille shall be placed together below all lines of tactile text.

f. Proportions: Raised characters on signs shall be selected from fonts where the width of the uppercase letter "O" is 60 percent minimum and 110 percent maximum of the height of the uppercase letter "I". Stroke thickness of the upperc ase "I" shall be 15 percent maximum of the height of the character.

2. Braille:

a. California Contracted Grade 2 Braille shall be used wherever Braille is required in other portions of these standards. Braille shall accompany all raised characters – CBC Section 11B-703.3 and 11B-703.3.1.

1) Dots shall be 1/10 inch (2.54 mm) on centers in each cell with 2/10 inch (5.08 mm) space between cells, measured from the second column of dots in the first cell to the first column of dots in the second cell.

2) Dots shall be raised a minimum of 0.025" - 0.037" above background.

3) Braille Dots shall be domed or rounded.

3. Signs shall be installed on the wall adjacent to the latch side of the door.

a. Where there is no space on the latch side, including at double leaf doors, signs shall be placed on the nearest adjacent wall, preferably on the right.

b. Mounting height shall be as indicated in details on the drawings and in compliance with 11B-703.4.1 and 11B-703.4.2.

B. Performance Requirements: It is the intention of this specification section and the drawings to form a guide for a complete, operable system signage system that is compliant with State and Federal Accessibility Regulations. Any items not specifically noted but necessary for a complete, operable and accessible system shall be provided under this section.

1.4 SUBMITTALS

A. Submit in accordance with Specification Section - SUBMITTAL PROCEDURES:

1. Product Data.

a. Submit manufacturer's full color range (including any standard, premium and custom colors) for selection by the Architect within thirty days of receipt of the NOTICE TO PROCEED.

1) Provide actual 2-inch x 2-inch sample colors and patterns available from the manufacturers for color selection.

2. Shop Drawings.

a. Submit shop drawings showing fabrication and installation of the work of this section including plans, elevations, sections, details of components, and attachments to other units of work, including accessibility dimensions for mounting heights.

3. Samples.

a. Provide actual 2-inch x 2-inch sample of each sign type specified.

4. Quality Assurance/Control Submittals:

a. Certificates:

1) Submit four (4) copies of certificates.

2) Upon completion of the installation, submit a Certificate from the Contractor (on the Contractor's Letterhead) and co-endorsed by the manufacturer/supplier, sub-contractor/installer that the signage supplied for this project requiring braille complies with the California Contracted Grade 2 Braille and the CBC Section 11B-703.3.
   a) Those attesting to the compliance certificate above shall also acknowledge that they are aware of the Submission Under Penalty Of Perjury per California Government Code Section 12650, et seq, pertaining to false claims, and further know and understand that submission of certification of a false claim may lead to fines, imprisonment and/or other severe legal consequences.

b. Manufacturer's Instructions:
   1) Submit three (3) copies of manufacturer's instructions.

5. Closeout Submittals in accordance with the following:
   a. Maintenance Data in accordance with Specification Section - PROJECT CLOSEOUT.
   b. Operation Data in accordance with Specification Section - PROJECT CLOSEOUT.
   c. Record Documents in accordance with Specification Section - RECORD DOCUMENTS.
   d. Warranty in accordance with Specification Section - PRODUCT WARRANTIES.

1.5 QUALITY ASSURANCE

A. Qualifications:
   1. Installer Qualifications:
      a. Engage an experienced Installer who has been approved by the manufacturer.
   2. Manufacturer's/Supplier's Qualifications:
      a. Firm's experienced in successfully producing/supplying products similar to those indicated for this Project, with sufficient production/supply capacity to produce/supply required units without causing delay in the work.

B. Regulatory Requirements:
   1. In accordance with Specification Section - Regulatory Requirements, and the following:
      a. 2010 ADA Standards for Accessible Design per DSA BU 11-07.
      b. ADA Americans with Disabilities Act of 1990.
      c. CARB Materials and equipment used for this Project shall comply with the current applicable regulations of the California Air Resources Board (CARB) and the Environmental Protection Agency (EPA), in the area where the project is located.
      d. CBC California Building Code - California Contracted Grade 2 Braille when required.
         1) Inspection: Tactile signs shall be field inspected for complaince after installation (11B-703.1.12).

1.6 DELIVERY, STORAGE, AND HANDLING

A. Packing, shipping, handling, and unloading:
   1. Products shall be handled in such a manner as to assure that they are free from dents, scratches and other damage.

B. Acceptance at Site:
1. Products must be in manufacturer's original unopened containers with labels indicating brand name, model, and grade.
2. Damaged products will not be accepted.

C. Storage and protection:
1. Products shall be stored in a dry, protected area.
2. Products shall be stored in locked storage building.
3. Products shall be stored above ground on level platforms, six (6) inches above ground, allowing air circulation under stacked units.
   a. Cover materials and protect against wetting prior to use.
   b. Cover materials with protective waterproof covering providing for adequate air circulation and ventilation.

PART 2 - PRODUCTS

2.1 MANUFACTURERS

A. Products specified are from companies listed below, or approved equivalent. These products listed herein establish the size, pattern, color range and function selected by the Architect for this Project. Manufacturers listed as acceptable alternative manufacturers must still comply with the requirements of the products listed in order to be approved as an equivalent during the Submittal Process. If the acceptable manufacturers listed are not approved during the Submittal Process due to non-compliance with the written documents, then the Contractor shall submit product specified.
1. Interlocking Metal Signs:
2. Plastic Signs:
3. Acrylic Signs:
   a. As supplied by SIGNS OF SUCCESS, INC. using Gravograph New Hermes Signage Material.
      1) (805) 925-7545 or www.signsofsuccess.net.
4. Decals:
   a. SETON NAME PLATE COMPANY.

B. Products from other manufacturers not listed must submit in accordance with Specification Section - SUBSTITUTION PROCEDURES.

2.2 MATERIALS

A. Plastic Signs:

B. Acrylic Signs:
1. Frameless, Profile Material bonded to Substrate Backup Material.
   a. All signs shall be made of exterior acrylic materials regardless of location (exterior or interior) within the Project.
   b. Profile Material:
      1) GRAVO-TAC Exterior, modified acrylic material, 1-ply, 1/32 inch, matte finish, integral color as selected by the Architect.

c. Substrate Material:
   1) 1/4 inch clear cast acrylic backup sheet.

C. Decals:
1. Provide outdoor grade permanent vinyl material with die cut graphics, characters and self-adhesive back for bonding to clean, smooth surfaces.

2.3 ACCESSORIES

A. Fasteners:
1. Concealed Attachment: Provide appropriate flathead countersunk stainless steel screws for the substrate backing in which the sign is to be applied.
2. Exposed Attachment – provide appropriate tamper resistant, flathead countersunk stainless steel screws with grommet finish washers for the substrate backing in which the sign is to be applied.
3. Adhesive: "Silastic Adhesive".
4. Foam Tape: SCOTCH MOUNT FOAM TAPE.

2.4 FABRICATION

A. Shop Assembly:
1. Braille Compliance:
   a. See Part 1 of this specification – SYSTEM DESCRIPTION, and comply with the “Design Requirements for Tactile Signage” that requires California Contracted Grade 2 Braille.
2. Metal Signs:
3. Plastic Signs:
4. Acrylic Signs:
   a. Manufacturer’s standard Profile Material, computer engineered, adhesive backed, raised graphics, complying with the latest ANSI A 117.1.
      1) Pictograms: All symbols shall match as closely as possible the published “International” symbols. Other interpretations will not be deemed acceptable. All symbols shall be approved prior to fabrication.
      2) Do not exceed the depth of profiling as recommended by the manufacturer for the thickness of the material to be profiled.

2.5 FINISHES

A. Metal Signs:

B. Plastic Signs:

C. Acrylic Signs:
1. Finish: Non-glare, face and core as selected by the Architect from the manufacturer’s full color line, including any custom colors complying with the requirements for contrasting colors of field to Symbols and Braille Text.
2. Allow for two-color application – one color for the field, and one color for the characters.

D. Decals:

1. Integral non-gare finish from outdoor vinyl and die cut vinyl graphics, characters, in contrasting colors as selected by the Architect.

PART 3 - EXECUTION

3.1 EXAMINATION

A. Site verification of conditions:
   1. Prior to the execution of the work under this specification section, inspect the installed work executed under other specification sections of this Project Manual which affect the execution of work under this specification section.
   2. Report unacceptable conditions to the Architect. Do not begin work until unacceptable conditions have been corrected.
   3. Execution of work under this specification section shall constitute acceptance of existing conditions.

3.2 PREPARATION

A. Coordination:
   1. Coordinate work under this specification section with work specified under other sections to ensure proper and adequate interface of work specified under this specification section.
   2. Contractor to provide internal wall blocking for all attached identifying devices.

B. Protection:
   1. Protect all adjacent surfaces from drips, spray, air pollution of surrounding environment, and other damage from work under this specification section.

C. Surface preparation:
   1. Prepare surface in accordance with manufacturer's written instructions and recommendations.
   2. Clean substrates of substances (oil, grease, rolling compounds, incompatible primers, loose mill scale, etc.) which could impair bond of materials specified within this section.

3.3 INSTALLATION

A. General:
   1. In accordance with manufacturer's written instruction and recommendations unless specifically noted otherwise.
   2. In accordance with approved Submittals.
   3. In accordance with Regulatory Requirements.
   4. Set plumb, level, and square.

B. Layout:
   1. Lines of all signs shall be straight and true.
   2. Set plumb, level, and square.
   3. Temporary positioning with foam tape.

C. Metal Signs:

D. Plastic Signs:

E. Acrylic Signs:
1. Tape attachment is not allowed.
2. Seal all exposed edges at exterior conditions with compatible sealant, same color as sign substrate backup plate.

F. Mounting Conditions:
1. Metal Stud Framed Wall: Provide solid metal backing, attached to studs, adequate for fastening at all corners of sign.
2. Wood Stud Framed Wall: Provide solid wood backing, attached to studs, adequate for fastening at all corners of sign.
3. Concrete and Concrete Masonry: Provide drilled 1/4" diameter concrete or concrete masonry stainless steel anchors at all corner s of signs.
4. Glass: Provide "Silastic Adhesive" for permanent attachment of back-up plate. Provide blank plate of same material and size as the sign itself. Place on opposite side of glass and aligned with sign. Color as selected by the Architect.
5. Door: Fasten to door with tamper resistant flathead countersunk screws, minimum three (3) stainless steel screws with grommet finish washers per sign.

3.4 CLEANING

A. Clean in accordance with Specification Sections - TEMPORARY FACILITIES AND CONTROLS and PROJECT CLOSEOUT.
1. Leave area level and free of any ruts or debris. Appearance of earth surface shall be equal to or better than adjacent undisturbed surfaces.
2. Clean any soiled surfaces at the end of each day, minimum.
3. Finish shall be clean and ready for the application of any additional finishes.
4. In accordance with manufacturer's written instructions and recommendations.

3.5 PROTECTION

A. Protection from traffic:
1. Provide final protection and maintain conditions, in a manner acceptable to manufacturer and installer, which ensures the work of this section being without damage or deterioration until the time of Substantial Completion.

3.6 SCHEDULES

A. General:
1. All signs with text shall have California Contracted Grade 2 Braille unless otherwise noted.
2. Refer to Plumbing drawings for number and approximate location for "Gas Valve" signs. Signs shall be mounted +2" above Finished Floor.
3. Refer to drawings for various backing requirements.
4. All mounting heights are to be to center of tactile signs per the CBC, and all others as shown on the drawings.

B. Sign Material:
   1. A = Acrylic
   2. D = Decal.

C. Mounting Condition:
   1. 1 = Metal Stud Framed Wall.
   2. 2 = Wood Stud Framed Wall.
   3. 3 = Concrete or Concrete Masonry.
   4. 4 = Glass.
   5. 5 = Door Mounted.

D. Mounting Location
   1. Strike side adjacent (S-1).
      a. Strike side adjacent reverse swing (SR-1).
   2. Strike side away (S-2).
      a. Strike side away reverse swing (SR-2).
   3. Strike side adjacent wall reverse swing (SR-3).
      a. Strike side adjacent wall (S-3).
   4. Hinge side adjacent (H-1).
      a. Hinge side adjacent reverse swing (HR-1)
   5. Hinge side away (H-2).
      a. Hinge side away reverse swing (HR-2).
   6. Hinge side adjacent wall (H-3).
      a. Hinge side adjacent wall reverse swing (HR-3).
   7. Door mounted (D-1).
      a. Door mounted reverse swing (DR-1).

E. Sign Types:
   1. Room Identification:
      a. 7" H x 7" L nominal square shape.
         1) 2" high Tactile Text required.
         2) Braille required.
      b. 7" H x 15" L nominal rectangular shape.
         1) 2" high Tactile Text required.
         2) Braille required.
      c. 11" H x 15"L nominal rectangular shape.
         1) 2" high Tactile Text required.
         2) Braille required.
   2. Tactile Identification:
      a. 3-1/2"H x 7"L nominal rectangular shape.
         1) 3/4" high Tactile Text required.
         2) Braille required.
      b. 3-1/2"H x 15"L nominal rectangular shape.
         1) 3/4" high Tactile Text required.
         2) Braille required.
      c. 7"H x 7"L nominal square shape.
         1) 3/4" high Tactile Text required.
         2) Braille required.
      d. 7"H x 15"L nominal rectangular shape.

1) 3/4" high Tactile Text required.
2) Braille required.

3. Non-Tactile Identification:
   a. 3-1/2"H x 7"L nominal rectangular shape.
      1) 3/4" high Non-Tactile Text required.
      2) No Braille required.
   b. 3-1/2"H x 15"L nominal rectangular shape.
      1) 3/4" high Non-Tactile Text required.
      2) No Braille required.
   c. 7"H x 7"L nominal square shape.
      1) 3/4" high Non-Tactile Text required.
      2) No Braille required.
   d. 7"H x 15"L nominal rectangular shape.
      1) 3/4" high Non-Tactile Text required.
      2) No Braille required.

END OF SECTION

SECTION 104400 – FIRE PROTECTION SPECIALTIES

PART 1 - GENERAL

1.1 SUMMARY

A. This Section includes the following:
   1. Provide all material, labor, equipment and services necessary to furnish and install Fire Protection Specialties, accessories and other related items necessary to complete the Project as indicated by the Contract Documents unless specifically excluded.

B. Related Sections: The following Sections contain requirements that relate to this Section:
   1. ALL DIVISION 00 SPECIFICATION SECTIONS.
   2. ALL DIVISION 01 SPECIFICATION SECTIONS.
   3. 06 10 00 ROUGH CARPENTRY
   4. 09 72 00 WALL COVERINGS
   5. ALL SPECIFICATION SECTIONS IN THE FACILITY SERVICES SUBGROUP.
   6. ALL SPECIFICATION SECTIONS IN THE SITE AND INFRASTRUCTURE SUBGROUP.

1.2 REFERENCES

A. Standards:
   1. In accordance with the following standards:
      a. NAAMM National Association of Architectural Metal Manufacturers

1.3 SUBMITTALS

A. Submit in accordance with Specification Section - SUBMITTAL PROCEDURES.
   1. Product Data, indicating Project, location in Project for each Model Number for Fire Extinguishers, Fire Blankets, Cabinets, Doors and Trim

1.4 QUALITY ASSURANCE

A. Qualifications:
   1. Installer Qualifications:
      a. Engage an experienced Installer who has successfully completed three [3] projects of similar scope and size to that indicated for this Project.
   2. Manufacturer/Supplier Qualifications:
      a. Firm experienced in successfully producing/supplying products similar to that indicated for this Project, with sufficient production/supply capacity to produce/supply required units without causing delay in the work.

B. Regulatory Requirements:
   1. In accordance with Specification Section - REGULATORY REQUIREMENTS, and the following:

a. CARB Materials and equipment used for this Project shall comply with the current applicable regulations of the California Air Resources Board (CARB) and the Environmental Protection Agency (EPA), in the area where the project is located.
b. NFPA National Fire Protection Association (NFPA 10).

1.5 WARRANTY

A. Contractor's General Warranty:
1. In accordance with Specification Section - WARRANTIES.

B. Manufacturer’s Warranty:
1. In accordance with manufacturer's written standard warranty:
a. Warranty Period One (1) Year.
2. Special Warranty: Manufacturer's standard form in which manufacturer agrees to repair or replace components of portable fire extinguishers that fail in materials or workmanship within specified warranty period.
a. Failures include, but are not limited to, the following:
1) Failure of hydrostatic test according to NFPA 10.
2) Faulty operation of valves or release levers.
a) Warranty Period: Six (6) years from date of Substantial Completion.

C. Installer's Warranty:
1. In accordance with the terms of the Specification Section - WARRANTIES:
a. Warranty period One (1) Year.

PART 2 - PRODUCTS

2.1 MANUFACTURERS

A. These products listed herein establish the size, pattern, color range and function selected by the Architect for this Project. Manufacturers that are listed as acceptable alternative manufacturers and substitutions must still comply with the requirements of this project and the products listed in order to be approved as an equivalent during the Submittal Process. If the acceptable alternative manufacturers listed or substitutions are not approved during the Submittal Process due to non-compliance with the contract documents, then the Contractor shall submit product specified.
1. Specified product manufacturer, or approved equivalent:
a. LARSEN'S MANUFACTURING CO.
1) Special hardware when required "Larsen-Loc".
2) WB-1, General:
a) Bracket Model #821.
b) Fire Extinguisher Model #MP5-A.
b. Acceptable alternative manufacturer:
1) JL INDUSTRIES
2. Products from other manufacturers not listed must submit in accordance with Specification Section - SUBSTITUTION PROCEDURES.

2.2 MANUFACTURED UNITS

A. Bracket and Extinguisher Type:
1. Surface mounted bracket Type WB-1.
a. General:
1) Provide Multi-Purpose Fire Extinguisher with a UL Rating of 3A-40B:C.
2) Model No. 821 extinguisher bracket, constructed of heavy gage steel with a white baked enamel finish.
b. Provide backing in wall for attachment of bracket(s).

2.3 FINISHES, GENERAL

A. Comply with NAAMM's "Metal Finishes Manual for Architectural and Metal Products" for recommendations for applying and designating finishes.

B. Protect mechanical finishes on exposed surfaces from damage by applying a strippable, temporary protective covering before shipping.

2.4 STEEL FINISHES

A. Surface Preparation: Clean surfaces of dirt, oil, grease, mill scale, rust, and other contaminants that could impair paint bond using manufacturer's standard methods.

B. Baked-Enamel Finish: Immediately after cleaning and pre-treating, apply manufacturer's standard two-coat, baked-enamel finish consisting of prime coat and thermosetting topcoat. Comply with paint manufacturer's written instructions for applying and baking to achieve a minimum dry film thickness of 2 mils.

PART 3 - EXECUTION

3.1 EXAMINATION

A. Site verification of conditions:
1. Prior to the execution of the work under this specification section, inspect the installed work executed under other sections of this Project Manual that affect the execution of work under this specification section.
a. Examine walls and partitions for suitable framing depth and blocking where recessed and semi-recessed cabinets will be installed.
b. Examine walls and partitions for suitable blocking where surface applied brackets will be installed.
c. Examine fire extinguishers for proper charging and tagging.
1) Remove and replace damaged, defective, or undercharged units.
2. Report unacceptable conditions to the Architect. Do not begin work until unacceptable conditions have been corrected.
3. Execution of work under this specification section shall constitute acceptance of existing conditions.

3.2 PREPARATION

A. Coordination:
   1. Coordinate work under this specification section with work specified under other sections to ensure proper and adequate interface of work.

B. Protection:
   1. Protect all adjacent surfaces from drips, spray, air pollution of surrounding environment, and other damage from work under this specification section.

C. Surface preparation:
   1. Prepare surface in accordance with manufacturer's written instructions and recommendations.
   2. Clean substrates of substances (oil, grease, rolling compounds, incompatible primers, loose mill scale, etc.) which could impair bond of materials specified within this section.

3.3 INSTALLATION

A. General:
   1. In accordance with manufacturer's written instructions and recommendations unless specifically noted otherwise.
   2. In accordance with approved submittals.
   3. In accordance with Regulatory Requirements.
      a. Comply with all applicable ADA and CBC requirements in regards to accessible mounting heights.
   4. Set plumb, level, and square.
   5. Identification:
      a. Apply decals, vinyl lettering, or other identification devices at locations indicated.

B. Layout:
   1. Lines shall be straight and true.

3.4 ADJUSTING

A. Test and adjust controls and safeties. Replace damaged or malfunctioning controls and equipment.
   1. Replace cabinets that have been damaged or have deteriorated beyond successful repair by finish touchup or similar minor repair procedures.

3.5 CLEANING

A. Clean in accordance with Specification Section - PROJECT CLOSEOUT.
   1. Clean any soiled surfaces immediately.
   2. In accordance with manufacturer's written instructions and recommendations.

a. Remove temporary protective coverings and strippable films, if any, as security fire-protection specialties are installed, unless otherwise indicated in manufacturer's written installation instructions.
b. Adjust cabinet doors to operate easily without binding. Verify that integral locking devices operate properly.
c. On completion of cabinet installation, clean interior and exterior surfaces as recommended in writing by manufacturer.
d. Touch up marred finishes, or replace cabinets that cannot be restored to factory-finished appearance. Use only materials and procedures recommended in writing or furnished by cabinet manufacturer.

3.6 PROTECTION

A. Protection from traffic:
1. Provide final protection and maintain conditions, in a manner acceptable to manufacturer and installer, which ensures the work of this section being without damage or deterioration until the time of Substantial Completion.

END OF SECTION

SECTION 26 00 00 – ELECTRICAL

PART 1 – GENERAL

1.01 DESCRIPTION:

A. This Section provides the Basic Electrical Requirements, which supplement the General Requirements of Division 1 and apply to all Facility Services.

B. Related Work:

1. Excavating, Backfilling and Compacting for Utilities.
2. Steel Reinforcement.
3. Cast-in-Place Concrete.

1.02 BASIC ELECTRICAL REQUIREMENTS:

A. Drawings and Specifications coordination:

1. For purposes of clearness and legibility, the electrical drawings are essentially diagrammatic. The size and location of equipment is shown to scale whenever possible. The Contractor shall verify all conditions, data and information as indicated on the drawings and in Specifications Sections where electrical work is required prior to installation.
2. The Electrical Drawings show size and points of termination of the conduits, the number and size of wires, and suggest the proper route for the conduit. It shall be the responsibility of the Contractor to install the conduits with minimum number of bends to conform to the structure, avoid obstructions, preserve headroom, keep openings and passageways clear, and meet all applicable Code requirements. The routing of conduits may be changed, if approved by the District Electrical Inspector.
   If the length of a conduit run is increased more than 10% of the length shown on the drawings, the Contractor shall consider worst case voltage drop and adjust wire and conduit size accordingly in compliance with Code. If the length of a conduit run is decreased more than 10% of the length shown on the drawings, the Contractor shall offer a credit to the District for the length and size of the conduit and wire deleted.
3. It is intended that outlets be located symmetrical with Architectural elements notwithstanding the fact that locations shown on the drawings may be distorted for clarity.
4. The Architectural and Structural Drawings take precedence over the electrical drawings in the representation of the general construction work. The drawings of the various trades take precedence in the representation of the work of those trades. The Contractor shall refer to all drawings to coordinate the electrical work with the work of other trades to eliminate all conflicts.

B. Terminology:

1. The term “signal system” shall apply to the clock, bell, fire alarm, annunciator, sound, public address, buzzer, public telephone, television, inter-communication, and security systems.
2. The term “low voltage” shall apply to systems operating at 600 volts and under.
3. The term “provide” used on the drawings and elsewhere in the Specifications shall be considered to mean furnish and install.
4. The term “U.L.” means Underwriters Laboratories, Inc.

C. Ordinances and Regulations:

1. Electrical work shall meet requirements of local authorities having jurisdiction, including municipal ordinances, City and/or County Building Codes, the California Administrative Code Title 24, the Safety Orders of the State Division of Industrial Safety, and the Fire and Panic Safety Standards of the State Fire Marshal. Material and labor shall conform to the Regulations of the National Board of Fire Underwriters for Electrical Wiring and Apparatus. All new material shall be U.L listed. The latest Electrical Ordinance of the local jurisdiction, including amendments thereto, effective on the date of opening bids for the work, is hereby made a part of this Specification, and shall apply to all work, except for those portions which conflict with the requirements of the local authorities.
2. Meet the requirements of the latest National Electrical Code adopted by the local jurisdiction.
3. Electrical work shall comply with the American National Standards Institute (ANSI), which includes the National Electrical Installation Standards (NEIS).

D. Structural Considerations for Conduit Routing:

1. Where conduits are to pass through or will interfere with any structural member, or where notching, boring or cutting of the structure is necessary, or where special openings are required through walls, floors, footings, or other building elements to accommodate the electrical work, such work shall conform to State Building Code, Title 24, for conduits and pipes embedded in concrete and for notches and bored holes in wood; for steel and when detailed on the Structural Drawings.
2. Where a concrete encasement for underground conduit abuts a foundation wall or underground structure which the conduits enter, the encasement shall rest on a haunch integral with the wall or structure, or shall extend down to the footing projection, if any, or shall be doweled into the structures unless otherwise indicated. Underground structures shall include manholes, pull boxes, vaults or buildings.

E. Electrically Operated Equipment and Appliances:

1. Equipment and appliances furnished by the Contractor:

a. The electrical work shall include furnishing and installing wiring enclosures for and the complete connection of all electrically operated equipment and appliances and any electrical control devices which are specified to be furnished and installed in this or other electrical Sections of the Specifications, except electrical work specified or indicated, to be in the Mechanical Work. All wiring enclosures shall be installed concealed, except where exposed work is indicated on the electrical drawings.

b. Connections shall be made as necessary to completely install the equipment ready for use. The equipment shall be tested for proper operation and, if motorized, for proper rotation. If outlets of incorrect electrical characteristics or if any equipment fails to operate properly, the Contractor shall report to the District's Inspector in writing, listing the buildings and rooms in which located, the name, make and serial number of the equipment, and a description of the defect.

2. Equipment and appliances furnished by others:

a. Equipment and appliances shown on the drawings as Not in Contract, Furnished by Others, or Furnished by the District, will be delivered to the Site. Required electrical connections shall be made for all such equipment and appliances in accordance with accepted trade practices under the direction of the District Inspector. All motorized equipment will be furnished factory wired to a motor starter or junction box, unless otherwise indicated. Appliances will be furnished equipped with portable cord and cap. Provide disconnect switches where required.

b. Connections to equipment furnished under other Sections shall be part of the electrical Work. Work shall include internal wiring, installation, connection and adjustment of bolted drive motors in which the motor is supplied as a separate unit and connections only for equipment furnished with factory installed internal wiring, except as further limited by the drawings and other portions of the Specifications. Work shall include furnishing and installing suitable outlets, disconnecting devices, starters, push-button stations, selector switches, conduit, junction boxes, and the wiring necessary for a complete electrical installation. The work shall also include furnishing and installing the conduit and outlet box, if needed for the control system, furnished under Mechanical. Devices and equipment furnished shall be of the same type used elsewhere on the job or as specified.

c. Electrical equipment furnished under other Sections for installation and connection under work of this Section shall be delivered to the installation location by the Contractor furnishing the equipment.

d. Mechanical equipment furnished under other Sections and requiring electrical connection under this Section, will be set in place by Contractor furnishing the equipment.

e. Suitability and condition of equipment furnished by other Sections shall be determined in advance of installation. Immediate notice shall be given to the District of damage, unsuitability or lack of parts.

F. Protection of materials:

1. Provide for the safety and good condition of all materials and equipment until final acceptance of the project by the District. Protect all materials and equipment from damage and provide adequate and proper storage facilities during the progress of the work. All damaged and defective work shall be replaced prior to final inspection.

1.03 GROUNDING SYSTEM REQUIREMENTS:

A. Grounding shall be as approved by the State of California, Division of Industrial Safety.

B. Electrical continuity to ground for metal raceways and enclosures, which are isolated from the equipment ground by use of non-metallic conduit or fittings, shall be provided with a Code sized green insulated grounding conductor within each raceway connected to the isolated metallic raceways or enclosures at each end. Each flexible conduit shall be provided with a green insulated grounding conductor of Code approved size.

C. Cold water or other utility piping systems shall not be used as the main system grounding electrodes due to the possible use of insulating couplings and nonmetallic pipe in such installations. All grounding electrodes shall be made electrodes as indicated on the drawings. Within every building the panels shall be bonded to a 1" or larger underground cold water service line with minimum 1" conduit, and one No. 6 wire. All metallic piping systems (gas, fire sprinkler) shall be bonded to the cold water line with 3/4" conduit with one No. 8 wire.

D. Non-current carrying metal parts of all high voltage, light and/or power, communications, control, and signal conduit systems, supports, cabinets, switchboards, enclosures, fixed equipment, portable equipment and motor frames shall be permanently and effectively grounded.

E. Service neutral conductors of light and/or power alternating current systems shall be grounded as indicated on the drawings and as required by the Utility Company.

F. Secondary neutral conductors of all light, power and signal alternating current systems shall be grounded.

G. Provide a “made electrode” bonded to the equipment enclosure at each separate building, including portable buildings, for each light and/or power system. Grounded (neutral) conductors shall be terminated at the neutral bus of the first panel or switchboard encountered within the building, and the neutral bus, equipment enclosure and "made electrode” shall be bonded together.

H. Cleaning:

1. Exposed parts of the electrical work shall be left in a neat, clean, usable condition. Finished painted surfaces shall be un-blemished and metal surfaces shall be polished.
2. Thoroughly clean all parts of the apparatus and equipment. Exposed parts, which are to be painted, shall be thoroughly cleaned of cement, plaster and other materials. Remove grease and oil spots with solvent. Such surfaces shall be wiped, and all corners and cracks scraped out. Exposed rough metal work shall be smooth, free of sharp edges, carefully steel brushed to remove rust and other spots, and left in proper condition to receive finish painting.
3. The Contractor shall remove from the Site all debris and rubbish occasioned by the electrical work. He shall thoroughly clean the building of dirt, debris, rubbish, and marks caused by the performance of the work.

1.04 SUBMITTALS:

Submit a material list in accordance with Section 013300.

PART 2 – PRODUCTS - Not used.

PART 3 – EXECUTION

3.01 INSTALLATION OF EQUIPMENT AND APPLIANCES:

A. Conduit stubs for equipment shall be terminated in a coupling flush with the finished floor and shall be extended with minimum 6" high rigid conduit to a motor starter, receptacle, or junction box. Flexible conduit as applicable shall be installed from the rigid conduit to motors and other vibrating equipment.

B. If the connection is from a flush wall-mounted junction box, install a weatherproof universal box extension and adaptor by Bell Electric Company, and extend with rigid steel conduit to the motor starter or junction box on the equipment.

C. All exposed final connections to equipment shall be by a watertight flexible metal conduit, unless otherwise indicated. A maximum of 36" of flexible metal conduit may be used except that all extensions from the flush floor couplings shall be rigid conduit to a distance not less than 6" above the floor.

D. Flexible conduit for all motors, cafeteria equipment and other equipment, including HVAC equipment, shall be liquid-tight flexible metal conduit and shall contain a Code size insulated green bond wire.

E. All exposed conduits shall be run vertically and horizontally following the general configuration of the equipment, using cast threaded hub conduit fittings where required and shall be clamped to the equipment with suitable iron brackets and one- hole pipe straps.

F. Connectors for flexible steel conduit shall be the type, which threads into the convolutions of the conduit or clamp type. Connectors for water-tight flexible metal conduit shall be approved for such use and shall be installed to make a watertight connection.

3.02 INSTALLATION OF GROUNDING EQUIPMENT:

A. Grounding "made electrode" rods shall be located in the nearest usable planting area, where not otherwise indicated on the drawings, and each electrode shall terminate within a concrete yard box installed flush with finish grade. In planting areas, concrete yard box shall be 2" above planting surfaces.

B. Rods shall be driven to a depth of not less than 8'-0". Electrodes shall have a resistance to ground of not more than 25 ohms if practicable. If the resistance exceeds 25 ohms, two or more electrodes connected in parallel shall be provided. The minimum number and size of ground rods shall be as required by State Electrical Safety Orders. Electrodes shall be separated from one another by not less than 6'-0". Parallel electrodes shall be connected together with approved fittings and approved grounding conductors in galvanized rigid steel conduit, buried not less than 12" below finish grade.

C. The grounding resistance shall be tested by an approved independent testing laboratory in the presence of the District Inspector, District Electrical Maintenance Supervisor and the District Engineer. The test results shall be submitted to the District Maintenance Supervisor on an official form for file with copies distributed to the District Inspector and Electrical Consulting Engineer

END OF SECTION

SECTION 26 05 00 – BASIC ELECTRICAL MATERIALS

PART 1 – GENERAL

1.01 DESCRIPTION:

A. Work Included:
1. Raceways, fittings and supports.
2. Wires, cables and connectors.
3. Boxes, enclosures, keys and locks.
4. Receptacles and switches.
5. Identifications and signs.

1.02 SUBMITTALS:

All submittals shall be made in accordance with Section 01300.

PART 2 – PRODUCTS

2.01 RACEWAYS, FITTINGS, AND SUPPORTS:

A. Conduit Materials:
1. Metallic conduit and tubing shall be manufactured under the supervision of Underwriters' Laboratory, Factory Inspection and Label Service Program. Each 10' length of conduit and tubing shall bear the Underwriters' Laboratory label and manufacturer's name.
2. Rigid steel conduit shall be heavy wall, mild steel, zinc coated, with an inside and outside protective coating. Couplings, elbows, bends and other fittings shall be the same materials and finish as the rigid steel conduit. Fittings, connectors, and couplings shall be threaded type.
3. Electrical metallic tubing shall be steel tubing, zinc coated with a protective enamel coating inside. Fittings, couplings and connectors shall be gland compression type. Electrical metallic tubing is designated herein after as "EMT".
4. Flexible steel conduit shall be of flexible interlocking steel strip construction with continuous zinc coating on the strips. Connectors and couplings shall be approved fittings of the type which thread into the convolutions of the flexible conduit or clamp type.
5. Liquid-tight flexible metal conduit shall be galvanized, heavy wall, flexible locked steel strip construction with a smooth moisture and oil proof, abrasion-resistant, extruded plastic jacket. Connectors shall be approved for use with liquid-tight flexible conduit and shall be installed to provide a liquid-tight connection.
6. Acceptable Manufacturers: Crouse Hinds or Appleton.
7. No metal clad (MC) cable allowed as alternate.

B. Sleeves for Conduits:
Sleeves shall be adjustable type, of 26 gauge galvanized iron, Adjusto Crete

Company, Adjusto-Crete, or Jet Line Products Inc., Jet-Line.

C. Expansion Joints:
Where conduits embedded in masonry or concrete cross seismic separations between buildings, expansion joints or at locations indicated, the Contractor shall provide sliding or a sliding and deflecting fitting, as conditions require in each conduit. Sliding fittings shall be O-Z Electrical Manufacturer Company, Inc., Type AX, with bonding strap and clamps. At exterior locations use O-Z Electrical Manufacturer Company Inc., Type EX.

D. Penetration in Fire Rated Structures:
Provide Dow Corning No. 3-6548, RTV silicone foam for making fire rated seals around penetrations through floors or walls.

2.02 WIRES, CABLES AND CONNECTOR:

A. Pull Wires: A 1/8" polypropylene cord shall be installed in each empty conduit. A 1/8" polypropylene cord shall be installed in each underground service conduit unless otherwise required by the utility company.

B. 600 Volts or Less Wires:
1. Wire shall be NEC type THHN or THWN in sizes No. 4 and smaller and NEC type THWN in sizes No. 2 and larger, unless otherwise indicated. All wire shall have copper conductors. Wires No. 14 and larger shall be stranded. Wires smaller than 12 gauge shall not be used in the light and power systems.
2. Wire adjacent to ovens and boilers, in range hoods, and at other dry locations where the operating temperature of the wire may be expected to exceed 60□ C, but not to exceed 90□ C, shall be National Electric Code Standard Type THHN. Where the temperature may be expected to exceed 90□ C, wire shall be a type approved by Underwriters' Laboratory for the temperature and installed conditions involved, silicone type wire 200□□C or equivalent.

C. Color Code, Signal and Communications Systems:
All wires for signal and communication systems shall be color coded per District standards and shall be installed under the direction of the District's Electrical Inspector. Request a copy of the District Standards for color coding prior to ordering wiring—black, red, blue, white – 208-240; brown, orange, yellow – 480/277.

2.03 BOXES, ENCLOSURES, KEYS AND LOCKS:

A. Outlet Boxes and Fittings:
1. Outlet boxes used in concealed work shall be galvanized or sherardized steel, pressed or welded type, with knockouts.
2. In exposed work, outlet boxes and conduit fittings required and where conduit runs change direction or size, shall be cast metal with threaded cast hubs cast integral with the box or fitting. Boxes and fittings shall not have unused spare hubs, except as otherwise indicated or approved manufacturer.
3. Fittings shall be cast metal and non-corrosive. Ferrous metal fittings shall be cadmium plated or zinc galvanized. The castings shall be true to pattern, smooth, straight, with even edges and corners, of uniform thickness of metal and shall be free of cracks, gas holes, flaws, excessive shrinkage and burnt out sand.

4. Covers for fittings shall be galvanized steel or non-corrosive aluminum and shall be designed for the fitting with which used.
5. Light fixture outlets shall be 4" octagon, 4” square, or larger, depending upon the number of wires or conduits therein, and shall be equipped with 3/8” malleable iron fixture studs, and plaster rings. Plaster rings shall have round opening with two ears drilled 2 23/32” center to center.
6. For local switch outlets use 4" square boxes for single gang, 4 11/16” square boxes for two-gang, and special solid gang boxes with gang plaster ring for more than two switches.
7. For all receptacle, clock, bell, fire station, speaker, security and telephone outlets, use 4” square boxes or larger with single gang plaster rings. For television outlets, use 4-gang deep boxes and 4-gang plaster rings. For communication switch, use 4" square boxes with single gang or larger plaster rings.
8. Plaster rings shall be provided on all flush mounted outlet boxes, except where otherwise indicated or specified. All plaster rings shall be same depth as the finished surface.
9. Factory made knock-out seals shall be installed to seal all box knock-outs, which are not intact.
10. At each location where flexible conduit is extended from a flush outlet box, provide and install a weatherproof universal box extension adapter by Bell Electric Company.
11. No more than one box extension or cuffs used anywhere.

B. Junction and Pull Boxes:
1. Junction and pull boxes, in addition to those indicated, shall only be used where absolutely necessary with the specific approval of the District's Electrical Inspector in each case.
2. Interior and non-weatherproof boxes shall be constructed of blue or galvanized steel with ample laps, spot welded and shall be rigid under torsional and deflecting forces. Boxes shall have auxiliary angle iron framing where necessary to ensure rigidity. Covers shall be fastened to the box with a sufficient number of brass or stainless steel machine screws to ensure continuous contact all around. Flush type boxes shall be drilled and tapped for cover screws at the site if the boxes are not installed plumb. All surfaces of pull and junction boxes and covers shall be given one coat of metal primer, and one coat of aluminum paint, and shall have permanent labels with box designation or system or circuit numbers.
3. Weatherproof pull and junction boxes shall conform to the foregoing for interior boxes with the following modifications: The cover of flush mounting boxes shall have a weather-tight gasket cemented to and trimmed even with the cover all around. Surface or semi-flush mounting pull and junction boxes shall be Underwriters' Laboratory approved as rain-tight and shall be complete with threaded conduit hubs. All exposed portions of boxes shall be galvanized and finished with a prime coat and standard coat of baked-on enamel. For underground pull-boxes, the cast iron cover shall be permanently marked Electrical, Power, Signal, Telephone or Ground.
4. All junction and pull-boxes shall be rigidly fastened to the structure and shall not depend on the conduits for support.

2.04 RECEPTACLES AND SWITCHES:

A. Receptacle shall be industrial Specifications grade, back and side wired with binding screws and plaster ears with captive mounting screws. Receptacle bodies shall be phenolic, plastic or bakelite with ivory colored faces, unless otherwise indicated. Receptacles shall have heavy duty, current carrying contacts and double wipe flat ground contacts. Receptacles shall be Hubbell, Arrow-Hart, Bryant or Leviton.

1. Duplex receptacles shall be 20 amps (NEMA 5-20R), 125 volts, two-pole, three-wire with parallel slots, U-ground.
2. Single receptacles shall be of the voltage, rating and configuration shown on the drawings.
3. Ground fault interrupting type receptacles shall consist of a duplex receptacle with a test and a reset device manufactured in a standard configuration for use with a duplex cover plate. Receptacles shall be 20 amps (NEMA 5-20R) or as indicated on the drawings. Exterior receptacles shall be weatherproof.
4. Weatherproof receptacles, except where otherwise indicated or specified, shall consist of a duplex receptacle, as specified herein, and a metal plate with die cast hinged lid and weatherproof mat.

B. Switches:
1. Local Switches:
   a. Local switches shall be tumbler type, industrial specification grade, rated 20 amps at 120-277 volts AC only, with plaster ears, binding screws for back and side wiring and standard size composition cups which fully enclose the mechanism. Switches shall be approved for use at currents up to the full rating on resistive, inductive, tungsten filament lamp and fluorescent lamp loads, and for up to 80% of the rating for motor loads. Switches shall be single pole, double pole, three-way, four-way, non-lock type, (or lock type when indicated). Non-lock type switches shall have ivory handles. Switch shall be Hubbell 1221I or approved manufacturer specified by the District.
   b. All lock type switches shall have metal or nylon key guides with ON/OFF indication, and shall be operable by the same key. Keys for lock type switches shall be forked type, cut from 1/16" stock. Fork dimensions shall be: External 1/4", Internal 5/32”, depth 3/16" and radius 5/64". Key switches shall be Hubbell 1221L only. Where pilot light is required for key switch see paragraph on Pilot Lights. Provide minimum ten keys to District.
   c. Pilot light switches shall be rated 20 amps and shall conform to the Specifications for local switches. The switches shall have red, rugged lexan handles that are lighted by long lasting neon lamps. Pilot light shall light when load is on. Single pole, 120 volts witches shall be Hubbell 1221-PL
   d. Remote control switches for mechanically held contractors arranged for three-wire control shall be tumbler type, momentary contact, single pole, three-position with center "OFF rated 20 amps at 120/277 volts AC only, with plaster ears, binding screws for side wiring, standard size composition cups which fully enclose the mechanism and ivory handles. Lock type switches shall be Hubbell 1557L.
2. Time Switches and Photo Electric Controls:
   a. Time switches shall be 7-day Intermatic or approved manufacturer specified by the District.
   b. Photo electric Control: Photo electric control shall be rated 2000 watts with single pole, single throw, normally closed contact, enclosed in a die cast aluminum gasket enclosure, Tork Series, Intermatic or approved manufacturer by the District.

2.05 IDENTIFICATION AND SIGNS:

A. Name Plates:
1. The following equipment shall be provided with name plates unless otherwise specified: Switchboards, motor control centers, control panels, push button stations, time switches, contractors, motor starters, motor switches, relays, panel boards and terminal cabinets.

2. Name plates shall give equipment designation and adequately describe the function, voltage and phase of the particular equipment involved. For panel boards, the nameplates shall indicate the panel designation, voltage and phase of the panel. For terminal cabinets, the nameplates shall indicate the system housed therein.
3. Nameplates shall be black and white nameplate stock of bakelite with characters cut through the black exposing the white. Plates shall have beveled edges and shall be securely fastened in place with No. 4 Phillips head, cadmium plated steel, self tapping screws. Characters shall be 3/16" high, unless otherwise indicated.

B. Markings:
The following equipment and controls shall have markings: Pull and junction boxes, and other devices controlling motors and appliances. Abbreviations acceptable to the District's Electrical Inspector, along with an identifying number, shall be used. Markings shall be done with locking type stencils using paint of a contrasting color. Figures shall be 3/8" high unless otherwise indicated.

C. Warning Signs:
1. Provide a warning sign firmly secured to the outside of each door or gate to enclosures containing high voltage equipment over 600 volts A.C. The signs shall read: "Danger High Voltage Keep Out ". Signs shall be 7" x 14" with all lettering 1" high, except the word "Danger", which shall have 1 1/2" high letters.
2. Signs shall be of standard manufacturer 18 gauge steel, with porcelain enamel finish. Letters shall be red on white background.

PART 3 – EXECUTION

3.01 CONDUIT INSTALLATION:

A. General Requirements:
1. Provide complete and continuous systems of rigid steel conduit, outlet boxes, junction boxes, fittings and cabinets for all systems of electrical wiring including lighting, power, communications, control and signal systems, except as otherwise specified.
   a. Site electrical distribution conduit sizes shall be:
      1.) Electrical power and lighting, and control systems distribution - 1" minimum.
      2.) Signal and communications distribution - 2" minimum and separate conduit for each system.
   b. Site underground pullboxes minimum – Christy N30.
2. Within buildings EMT may be used in lieu of rigid steel conduit where permitted by ordinance. EMT shall not be used in the following cases: exposed below 8 feet elevations; in concrete; underground.
3. Within buildings flexible steel conduit may be used in lieu of rigid steel conduit where permitted by ordinance, but no metal clad (MC) cable. Flexible steel conduit shall not be used for runs longer than 6 feet or for exposed conduits.
4. Flexible steel conduit shall be used, except where otherwise specified, for final connection of all motor terminal boxes and shall be of sufficient length (not to exceed 36") to allow full travel or adjustment of the motor on its base.

5. Underground feeder distribution conduits for all systems may be nonmetallic polyvinyl chloride (PVC) Schedule 40 conduit in lieu of rigid steel conduit, except where otherwise specified or indicated.
6. Conduit shall be concealed, unless otherwise indicated. Conduits exposed to view (except those in attic spaces and under buildings) shall be installed parallel or at right angles to structural members, walls, or lines of the building. Conduits shall be routed to clear access openings.
7. Bends or offsets will not be permitted, unless absolutely necessary. The radius of each conduit bend or offset shall be as required by ordinance, except for underground conduits, for public telephone conduits, and where otherwise indicated or specified. Bends and offsets shall be made with standard tools and equipment made especially for the purpose or may be factory made bends or elbows complying with the requirements for radius of bend specified herein. Public telephone conduit bends and offsets shall have a radius, which is not less than ten times the trade size of the conduit, unless otherwise approved by the telephone company. Refer to "Underground Conduit Installation" for the radius of bends and offsets required for underground installations.
8. Running threads will not be permitted. Provide approved conduit unions where union joints are necessary. Conduits shall be kept at least 6" from the coverings on hot water and steam pipes and 18" from flues and breechings. The open ends of conduits shall be kept closed with approved conduit seals during construction of the buildings and during the installation of underground systems.
9. The joints in conduits installed in concrete, wet locations, exposed to the weather or underground shall be made liquid tight.
10. Conduits run exposed on roofs shall be rigid conduit (no EMT).
11. Where auxiliary supports, saddles and brackets are required to meet special conditions, they shall be made rigid and secure before the conduit is attached thereto.
12. Conduit in ceiling spaces, in stud walls and under floors, shall be supported with factory made pipe straps or shall be suspended with pipe hangers or pipe racks. The pipe straps shall be attached to and shall hold the conduit tight at the point of support against the ceiling, floor joists, rafters, wall studs or 2" x 4" headers fitted between the joists or wall studs.
13. Conduits installed on exposed steel trusses and rafters shall be fastened with factory made conduit straps or clamps, which shall hold the conduit tight against the supporting member at the point of support.
14. Conduits under buildings shall be buried below the surface of the ground.
15. Pipe hangers for individual conduits shall be factory made, consisting of a pipe ring and threaded suspension rod. The pipe ring shall be malleable iron, split and hinged, and shall securely hold the conduit, or shall be springable wrought steel. Rings shall be bolted to or interlocked with the suspension rod socket. Rods shall be 3/8" for 2" conduit hangers and smaller and shall be 1/2” for 2 1/2" conduit hangers and larger.
16. Pipe racks for groups of parallel conduits and for supporting total weights not exceeding 500 pounds shall be trapezed type and shall consist of a cross channel, Steel City Kindorf No. B-900 or Unistrut No. P-1000 suspended with a 3/8" minimum diameter steel rod at each end. Each rod shall be fastened with nuts, top and bottom to the cross channel and with a square washer on top of the channel. Each conduit shall be clamped to the top for the cross channel with conduit clamps, Steel City Kindorf No. C-105 or Unistrut Nos. P-1111 through P-1124. Conduits shall not be stacked one on top of the other, but a maximum of two tiers may be on the same rack by providing an additional cross channel. Where a pipe rack is to be longer than 18" or if the weight it is to support exceeds 500 pounds, submit details of the installation to the Architect for approval.

17. Conduits, which are suspended on rods more than 2' long, shall be rigidly braced per State Seismic Regulations to prevent horizontal motion or swaying.
18. Factory made pipe straps shall be one- or two-hole formed galvanized clamps, heavy duty type, except as otherwise specified.
19. Hangers, straps, rods or pipe supports under concrete shall be attached to inserts set at the time the concrete is poured. Under wood, use bolts, lag bolts or lag screws; under steel joists or trusses, use beam clamps.
20. Conduits shall be supported at intervals required by ordinance, but not to exceed 10'. One inch and smaller conduits installed exposed shall be fastened with 2-hole straps. Perforated strap and plumber's tape shall not be used in the support of conduits.
21. Each conduit stubbed up through a roof or an arcade shall be flashed with a waterproof flashing. The base of the flashing shall extend on the roof not less than 10" from the conduit. Flashing shall extend up the conduit not less than 6" and shall be in contact with the conduit for minimum 1" at the top. Refer to Division 7, Sections 07310, 07510, and 07541.
22. Bushings for all sizes of rigid steel conduits shall be threaded insulating type. Set screw bushings are not acceptable.
23. All flex conduits shall be cut square and not at an angle.
24. It shall be the responsibility of the Contractor to install the conduits with a minimum number of bends in such a manner as to conform to the structure and meet all applicable code requirements.
25. The routing of conduits may be changed if approved by the District Inspector, providing the length of any conduit run is not decreased more than 10% of the length shown on the drawings.
26. Minimum size conduit for all signal and communication systems shall be 3/4”.
27. A minimum of two 1" conduits shall be installed (stubbed) into nearest accessible ceiling space from each panelboard, terminal cabinet, distribution panelboard, backboard or switchboard. Cap conduits with appropriate conduit caps.
28. Conduits installed vertically on the outside surface of buildings shall be strapped tight to the building surface with no space behind.

B. Underground Requirements:
1. All conduits installed underground shall be entirely encased in concrete 3" thick on all sides with multiple conduits spaced not less than 1 1/2" apart, unless otherwise specified. Provide approved conduit spacers as required to prevent any deflection of the conduits when concrete is poured and to preserve the position and alignment of the conduits in the concrete. Conduits shall be tied to the spacers. Anchors shall be installed to prevent floating of conduits during pouring of concrete. Red colored concrete shall be used to encase conduits of systems operating above 600 volts.
2. All underground conduits shall be buried to a depth of not less than 24" below finished grade to the top of the concrete envelope, unless otherwise specified.
3. Assemble the sections of conduit with approved fittings and stagger all joints. Cut ends of conduit shall be reamed to remove all rough edges. The joints in all conduits shall be made liquid tight. All bends at risers shall be completely below the surface where possible.
4. Two or more conduit runs in a common trench shall be separated by at least 1 1/2" of concrete. Electric conduit runs installed in a common trench with other utility lines shall be separated from such lines by at least 12" horizontally. Public telephone conduits shall be separated from electric conduits or other utility lines by not less than 3" of concrete, 2' horizontally and 1' vertically.
5. The District’s Electrical Inspector shall be called to the site for approval of all underground installations before and during concrete pour. Where considered necessary by the District’s

Electrical Inspector, a mandrel shall be drawn through each run of conduit in the presence of the Inspector, before and after pouring concrete. The mandrel shall be 6" in length minimum and have a diameter which is within 1/4" of the diameter of the conduit to be tested.

6. Nonmetallic conduit installations shall comply with the following additional requirements: All joints in PVC conduit shall be sealed by means of approved solvent-weld cement supplied by the conduit manufacturer. All nonmetallic conduit bends and deflections shall comply with the requirements of the applicable Electrical Code, except that the minimum radius of any bend or offset for conduits sized from 1/2" to 1 1/2" inclusive shall not be less than 24". All 90° Ell's, 1" and larger, shall be rigid conduit. All 90 degree bends, bends at risers, and the risers shall be rigid steel conduit and shall comply with the requirements specified herein for underground rigid steel conduit installations. The radius of the curve of any bend or offset in non-metallic conduit for the Public Telephone System shall be not less than ten times the trade size of the conduit, unless otherwise specifically approved by the Public Telephone Utility Company.
7. Rigid steel conduit installations shall comply with the following additional requirements: Where sweeps are specified or indicated, the radius shall be not less than 10'. The radius of the curve of the inner edge of any bend or offset shall be not less than is permitted in the Conduit Bend Radii table for rigid steel conduit field bends in the applicable Electrical Code, unmodified by any exemptions, bulletins, or amendments. The radius of the curve of bends or offsets for the Public Telephone System shall be not less than ten times the trade size of the conduit, unless otherwise specifically approved by the Telephone Utility Company. Rigid conduit underground to be double wrapped with 10 mill tape.

C. In Slabs on Grade:
1. Unless specifically approved by the Office of the State Architect, conduits 1 1/4 size and larger shall not be installed in structural concrete slabs. Where conduits are permitted, and are installed in concrete slabs on grade, the slabs shall be thickened at the bottom where conduits occur to provide 3" of concrete between the conduit and earth. Conduits shall clear all rebar. The required excavation shall be part of the work of this Section.
2. If the concrete slab is 5" or more in thickness with a moisture barrier plastic sheet between the earth and the slab, the 1" and smaller conduits shall be installed in the slab with a minimum of 1" concrete between earth and conduit.

D. Penetration in Concrete Walls, Beams and Floors: Provide sleeves where conduits pierce concrete walls, beams and floors, except floor slabs on earth. Sleeves shall have 1/2" clearance around conduits. Sleeves shall not extend beyond the exposed surfaces of the concrete and shall be securely fastened to the forms. Where conduits pass through walls below grade, calk with District approved sealant and provide backer materials between the conduit and the sleeve to obtain a watertight joint.

3.02 STUBS:

A. Floor: At each point where floor stubs are indicated in open floor areas for connections to equipment, the conduits shall be terminated with couplings, the tops flush with the finished floor. Stubs shall extend above the couplings the indicated distance, but in no case less than 6" high. Where capped stubs are called for, the couplings shall be closed with cast iron plugs with screw drive slots.

B. Underground:
1. Underground conduit stubs shall be terminated at the locations indicated, but minimum 5' beyond building foundations, steps, arcades, concrete walks and paving, unless otherwise

noted. Rigid steel conduit stubs and nonmetallic conduit stubs shall be capped by installing a coupling flush in the end wall of the concrete encasement and plugging with an approved plug or terminated stub in a concrete box (Christy). The As-Built Record drawings shall show the location of the ends of underground conduit stubs fully dimensioned with reference to the buildings or permanent landmarks. These dimensions, including depth below finished grade, shall be marked on the "As-Built" Record Drawings in the presence of the District's Inspector before backfilling in the trench.

3.03 WIRE INSTALLATION:

A. Wire shall not be installed until all plastering throughout the building is completed, and all debris and moisture removed from the conduits, boxes, and cabinets.

B. Wire-pulling compounds used as lubricants in installing conductors in raceways shall only be compounds approved and listed by Underwriters' Laboratory. No oil, grease, graphite, or similar substances may be used. Pulling of No. 1/0 or larger conductors shall be done only with an approved cable pulling machine.

C. The District's Inspector shall be called to the site and shall supervise the installation of all feeder cables. The District shall be notified not less than two working days in advance of the proposed time of installation.

D. At all outlets for light, power, communications, control, and signal equipment, pigtail splices with 8" circuit conductor leads shall be provided for connection to fixtures, equipment and devices.

E. Pressure cable connectors, pre-insulated "Scotchlok" Type "'Y", "R", or "B" spring loaded twist-on type, may be used for splicing 8 gauge or smaller conductors, in lieu of soldered connectors for all wiring systems, except the public address, District owned telephone system, or system clocks.

F. All joints, splices, taps and connections for cables 6 gauge and larger, shall be made with high-pressure cable connectors approved for use with copper conductors.

G. Wire in switchboards, panels, terminal cabinets, pull boxes and other cabinets (except public address) shall be neatly grouped and tied in bundles with nylon ties at 10" maximum intervals. At switchboards, panels and terminal blocks, wires shall be fanned out to the terminals.

H. Each neutral conductor larger than 6 gauge which is not color identified throughout its entire length shall be painted white or taped white wherever it appears in a switchboard, cabinet, gutter or box. Neutral conductors 6 gauge and smaller shall be white color identified throughout their entire length.

I. All systems of wiring shall be so installed that when completed, the systems will be free from short circuits and from grounds, other than required grounds. The Contractor shall provide all instruments for testing and shall demonstrate in the presence of the District's Electrical Inspector that each system of wiring meets the following minimum requirements for insulation resistance:
   1. For circuits of No. 12 AWG wiring or smaller: 1,000,000 ohms.
   2. For circuits of No. 10 or larger conductors, a resistance shall be based on the following allowable current-carrying capacities of conductors:

25 to 50 amperes inclusive	250,000 ohms
51 to 100 amperes inclusive	100,000 ohms
101 to 200 amperes inclusive	50,000 ohms
201 to 400 amperes inclusive	25,000 ohms
401 to 800 amperes inclusive	12,000 ohms
Over 800 amperes inclusive	5,000 ohms

3. The above values shall be obtained with all switchboards, panel boards, fuse holder, switches, and overcurrent devices in place and connected, and with all switches closed.
4. If lamp holders, receptacles, fixtures and appliances for a system are also connected, the minimum insulation resistance permitted shall be one-half the values specified above.

J. The Contractor shall provide a "Meager" insulation tester, which will apply a minimum of 500 volts direct current for these tests when requested by the District's Inspector.

K. 120 volts and 277 volts circuits shall be routed in separate conduits, raceways and enclosures.

L. Other conductors in raceway or cable: Conductors, other than service conductors, shall not be installed in the same service raceway or service cable.

All low voltage wiring regardless of insulation voltage rating shall be in a separate raceway. It shall not be in the same raceway or pullbox with systems 100 volt or more.

3.04 FEEDER IDENTIFICATION:

Lighting, power, and low voltage feeder wires and cables shall be identified at each point of termination and at each point the conduit run is broken by a cabinet, box and gutter. Identification shall be by means of wrap around type markers, E-Z Code or Brady Perma-Code, and shall include the feeder designation, size and description.

3.05 TAPE:

Splices, joints and connectors joining conductors shall be covered with insulation equivalent to that on the conductors. Free ends of conductors connected to an energized source shall be taped. The voids in irregular connectors shall be filled with insulating compound before taping. Thermo plastic insulating tape approved by Underwriters' Laboratory for use as the sole insulation of splices shall be used and shall be applied according to the manufacturer's printed specifications. Heat shrink tubing may be used as per manufacturer's specifications.

3.06 BOXES INSTALLATION AND SUPPORT:

A. Outlet boxes shall be flush with finished surface of wall or ceiling. They shall be plumb and securely fastened to the structure independent of the conduit. Except where otherwise indicated, factory made bar hangers shall be used to support outlet boxes.

B. Outlet boxes installed in ceilings suspended or furred with steel runner and/or furring channels shall be supported (except where otherwise indicated) by a Unistrut No. P-4000 channel spanning the main ceiling runner channels. Each box shall be supported from its channel by a 3/8" 16 threaded steel rod with a Unistrut No. P-4008 nut and a Tomic No. 711-B Adapta-Stud. The rod

shall be tightened to a jamb fit with the channel and its nut. The box shall be locked to the rod by means of a 1/2” locknut on the stud and a 3/8" 16 hex nut locking the stud to the rod.

C. The heights of outlets and equipment indicated on the drawings shall govern, but in the absence of such indications, the following heights shall be maintained. Heights are to centerline from finished floor surface, unless otherwise noted:
   1. Communication switch, pushbutton, light switch, other switches, and fire station outlets: 48".
   2. Bell and/or horn outlets in corridors: 12" below ceiling.
   3. Clock, speaker, and bell outlets in classrooms and offices: 8' 0".
   4. Outside bell and yard light outlets: 12" below the top plate level for one-story buildings without covered porch or arcade, and 12” below covered porch and arcade ceilings.
   5. Desk public telephone, television, desk interphones, and receptacle outlets 12".
   6. Panel boards and terminal cabinets: 6' 6" to top.

D. Receptacle outlet boxes shall not be located within 6' of water sinks, except where a ground fault interrupter circuit breaker or ground fault type receptacle is provided to protect receptacle outlets located within 6' of water sinks.

3.07 PLATES:

A. Provide an appropriate plate on each outlet. Plates shall be of stainless steel, unless otherwise specified. Public telephone plates shall have single bushed openings. Sectional plates will not be accepted.

B. Flush wiring device and signal system outlets indicated to be blank covered, shall be covered with blank stainless steel plates. Flush lighting outlets to be capped shall be covered with Wire mold No. 5736 steel covers, painted to match the surrounding finish. Surface-mounted outlets indicated to be capped shall be covered with blank stainless steel covers.

C. Switch and receptacle plates shall be provided with engraved designations under any one of the following:
   1. Pilot Switches.
   2. Switches so located that the operator cannot see one of the fixtures or items for equipment controlled with his hand on the switch.
   3. Switches not in the same room with the fixtures or items of all unit heaters, air curtains, fly fans, and exhaust fans.
   4. Receptacles operating at other than 120 volts.
   5. Where so indicated on the drawings.

D. The designations shall be as indicated on the drawings or as specified and shall be engraved in the plates with 3/16" high block type letters filled with black enamel. Where designations are not indicated or specified they shall be requested from the Engineer. For estimating purposes, they may be assumed 12", not to exceed more than ten letters per gang.

3.08 IDENTIFICATION OF CIRCUITS AND EQUIPMENT:

A. Switchboards, motor control centers, transformers, panel boards, circuit breakers, disconnectinq switches, starters, pushbutton control stations and other apparatus used for the operation or

control of circuits, appliances or equipment, shall be properly identified by means of descriptive nameplates or tags permanently attached to the apparatus or wiring.

B. Nameplates shall be engraved laminated bakelite. Shop Drawings with dimensions and format shall be submitted to the District or Architect for approval before installation. Attachment to equipment shall be with self-tapping screws. Self-adhering or adhesive backed nameplates shall not be used.

C. Tags shall be attached to feeder wiring in conduits at every point where runs are broken or terminated, including pull wires in empty conduits. Circuit, phase and function shall be indicated. Branch circuits shall be tagged in distribution boards, panel boards, and motor control centers. Tags shall be made of pressure sensitive plastic or embossed self-attached stainless steel or brass ribbon.

D. Cardholders and cards shall be provided for circuit identification in panel boards. Cardholders shall consist of metal frame retaining a clear plastic cover permanently attached to the inside of panel door. List of circuits shall be typewritten on a card. Circuit description shall include name or number of circuit, area and connected load.

E. Junction and pull boxes shall have covers stenciled with box number when shown on the drawings, or circuit numbers according to panel schedules. Data shall be lettered in a conspicuous manner with a color contrasting with finish.

F. Name as described in part 2A shall be correctly engraved with a legend showing function or areas when required by Codes or shown on the drawings.

G. Provide identity tags as to source and destination of all underground feeder cables in underground boxes.

H. Underground feeder cables not to exceed 200 feet without a pull box.

END OF SECTION

SECTION 26 05 26 – GROUNDING

PART 1 – GENERAL

1.01 DESCRIPTION:

A. Work Included:
   1. Provide and install a grounding system as specified and indicated.

B. Related Work:
   1. See related Sections for their system grounding requirements.
   2. Electrical: Section 260000.
   3. Common Work Results for Electrical: Section 260500.

1.02 SYSTEM REQUIREMENT:

A. Grounding shall be as approved by the State of California, Division of Industrial Safety.

B. Electrical continuity to ground for metal raceways and enclosures, which are isolated from the equipment ground by use of non-metallic conduit or fittings, shall be provided with a Code sized green insulated grounding conductor within each raceway connected to the isolated metallic raceways or enclosures at each end. Each flexible conduit shall be provided with a green insulated grounding conductor of Code approved size.

C. Cold water or other utility piping systems shall not be used as the main system grounding electrodes due to the possible use of insulating couplings and nonmetallic pipe in such installations. All grounding electrodes shall be made electrodes as indicated on the drawings. Within every building the panels shall be bonded to a 1" or larger underground cold water service line with minimum 1" conduit, and one No. 6 wire. All metallic piping systems (gas, fire sprinkler) shall be bonded to the cold water line with 3/4" conduit with one No. 8 wire.

D. Non-current carrying metal parts of all high voltage, light and/or power, communications, control, and signal conduit systems, supports, cabinets, switchboards, enclosures, fixed equipment, portable equipment and motor frames
shall be permanently and effectively grounded.

E. Service neutral conductors of light and/or power alternating current systems shall be grounded as indicated on the drawings and as required by the Utility Company.

F. Secondary neutral conductors of all light, power and signal alternating current systems shall be grounded.

G. Provide a “made electrode” bonded to the equipment enclosure at each separate building, including portable buildings, for each light and/or power system. Grounded (neutral) conductors shall be terminated at the neutral bus of the first panel or switchboard encountered within the building, and the neutral bus, equipment enclosure and "made electrode” shall be bonded together.

1.03 SUBMITTALS:

Submit a material list in accordance with Section 013300.

PART 2 – PRODUCTS

2.01 MATERIALS:

A. Yard boxes for "made electrodes" shall be precast concrete as detailed on the drawings. Boxes shall be equipped with bolted down, checkered, cast iron covers and a cast iron frame cast into the box. Yard boxes shall be Brooks 36 or approved manufacturer.

B. "Made electrodes" shall be approved copper clad steel ground rods, minimum 3/4" diameter 10' 0" long or a copper "Ufer conductor encased in the concrete building foundation as indicated on the drawings.

PART 3 – EXECUTION

3.01 INSTALLATION:

A. Grounding "made electrode" rods shall be located in the nearest usable planting area, where not otherwise indicated on the drawings, and each electrode shall terminate within a concrete yard box installed flush with finish grade. In planting areas, concrete yard box shall be 2" above planting surfaces.

B. Rods shall be driven to a depth of not less than 8' 0". Electrodes shall have a resistance to ground of not more than 25 ohms if practicable. If the resistance exceeds 25 ohms, two or more electrodes connected in parallel shall be provided. The minimum number and size of ground rods shall be as required by State Electrical Safety Orders. Electrodes shall be separated from one another by not less than 6' 0". Parallel electrodes shall be connected together with approved fittings and approved grounding conductors in galvanized rigid steel conduit, buried not less than 12" below finish grade.

C. The grounding resistance shall be tested by an approved independent testing laboratory in the presence of the District Inspector, District Electrical Maintenance Supervisor and the District Engineer. The test results shall be submitted to the District Maintenance Supervisor on an official form for file with copies distributed to the District Inspector and Electrical Consulting Engineer.

END OF SECTION

SECTION 26 05 53 – ELECTRICAL IDENTIFICATION

PART 1 – GENERAL

1.1 RELATED DOCUMENTS:

A. Drawings and general provisions of the Contract, including General Section 00700 and Division 1 Specification Sections, apply to this Section.

1.2 SUMMARY:

A. This Section includes identification of electrical materials, equipment, and installations.

1.3 SUBMITTALS:

A. General: Submit each item in this Paragraph according to the Conditions of the Contract and Division 1 Specification Sections.

B. Product Data for each type of product specified.

C. Schedule of identification nomenclature to be used for identification signs and labels.

D. Samples for each color, lettering style, and other graphic representation required for identification materials; samples of labels and signs.

1.4 QUALITY ASSURANCE:

A. Comply with California Electrical Code.

B. Comply with ANSI C2.

1.5 SEQUENCING AND SCHEDULING:

A. Coordinate installing electrical identification after completion of finishing where identification is applied to field-finished surfaces.

B. Coordinate installing electrical identifying devices and markings prior to installing acoustical ceilings and similar finishes that conceal such items.

PART 2 – PRODUCTS

2.1 MANUFACTURERS

A. Manufacturers: Subject to compliance with requirements, provide products by one of the following:
   1. Brady USA, Inc.; Industrial Products Division.
   2. Carlton Industries, Inc.
   3. Cole-Flex Corp.
   4. EMED Co., Inc.
   5. Ideal Industries, Inc.
   6. Panduit Corp.

2.2 RACEWAY AND CABLE LABELS

A. Manufacturer's Standard Products: Where more than one type is listed for a specified application, selection is Installer's option, but provide single type for each application category. Use colors prescribed by ANSI A13.1, California Electrical Code, and these Specifications.

B. Conform to ANSI A13.1, Table 3, for minimum size of letters for legend and minimum length of color field for each raceway or cable size.
   1. Color: Black legend on orange field.
   2. Legend: Indicates voltage and services.

C. Adhesive Labels: Preprinted, flexible, self-adhesive vinyl. Legend is over-laminated with a clear, weather- and chemical-resistant coating.

D. Pretensioned, Wraparound Plastic Sleeves: Flexible, preprinted, color-coded, acrylic bands sized to suit the diameter of the line it identifies and arranged to stay in place by pretensioned gripping action when placed in position.

E. Colored Adhesive Tape: Self-adhesive vinyl tape not less than 3 mils thick by 1 to 2 inches wide (0.08 mm thick by 25 to 51 mm wide).

F. Underground Line Warning Tape: Permanent, bright-colored, continuous-printed, vinyl tape with the following features:
   1. Size: Not less than 6 inches wide by 4 mils thick (152 mm wide by 0.102 mm thick).
   2. Compounded for permanent direct-burial service.
   3. Embedded continuous metallic strip or core.
   4. Printed Legend: Indicates type of underground line.

G. Tape Markers: Vinyl or vinyl-cloth, self-adhesive, wraparound type with preprinted numbers and letters.

H. Aluminum, Wraparound Marker Bands: Bands cut from 0.0140-inch (0.4 mm) thick aluminum sheet, with stamped or embossed legend, and fitted with slots or ears for permanently securing around wire or cable jacket or around groups of conductors.

I. Plasticized Card-Stock Tags: Vinyl cloth with preprinted and field-printed legends. Orange background, except as otherwise indicated, with eyelet for fastener.

J. Aluminum-Faced Card-Stock Tags: Weather-resistant, 18-point minimum card stock faced on both sides with embossable aluminum sheet, 0.002 inch (0.05 mm) thick, laminated with moisture-resistant acrylic adhesive, and punched for the fastener. Preprinted legends suit each application.

K. Brass or Aluminum Tags: Metal tags with stamped legend, punched for fastener. Dimensions: 2 x 2 inches (51 x 51 mm) x 0.05 inch (1.3 mm).

2.3 ENGRAVED NAMEPLATES AND SIGNS:

A. Manufacturer's Standard Products: Where more than one type is listed for a specified application, selection is Installer's option, but provide single type for each application category. Use colors prescribed by ANSI A13.1, California Electrical Code, and these Specifications.

B. Engraving stock, melamine plastic laminate, 1/16-inch (1.6 mm) minimum thick for signs up to 20 sq. in. (129 sq. cm), 1/8-inch (3.2 mm) thick for larger sizes.
   1. Engraved Legend: Black letters on white face.
   2. Punched for mechanical fasteners.

C. Baked-Enamel Signs for Interior Use: Preprinted aluminum signs, punched for fasteners, with colors, legend, and size as indicated or as otherwise required for the application. 1/4-inch (6.4 mm) grommets in corners for mounting.

D. Exterior, Metal-Backed, Butyrate Signs: Weather-resistant, nonfading, preprinted, cellulose acetate butyrate signs with 0.0396 inch (1 mm) galvanized steel backing, with colors, legend, and size appropriate to the application. 1/4-inch (6.4 mm) grommets in corners for mounting.

E. Fasteners for Plastic-Laminated and Metal Signs: Self-tapping stainless-steel screws or No. 10/32 stainless-steel machine screws with nuts and flat and lock washers.

2.4 MISCELLANEOUS IDENTIFICATION PRODUCTS:

A. Cable Ties: Fungus-inert, self-extinguishing, 1-piece, self-locking, Type 6/6 nylon cable ties with the following features:
   1. Minimum Width: 3/16 inch (5 mm).
   2. Tensile Strength: 50-lb. (22.3 kg) minimum.
   3. Temperature Range: Minimum 40 to 185 degrees F (minimum 4 to 85 degrees C).
   4. Color: As indicated where used for color-coding.

B. Paint: Alkyd-urethane enamel over primer as recommended by enamel manufacturer.

PART 3 – EXECUTION

3.1 INSTALLATION:

A. Install identification devices according to manufacturer's written instructions.

B. Install labels where indicated and at locations for best convenience of viewing without interference with operation and maintenance of equipment.

C. Lettering, Colors, and Graphics: Coordinate names, abbreviations, colors, and other designations used for electrical identification with corresponding designations used in the Contract Documents or required by codes and standards. Use consistent designations throughout the Project.

D. Sequence of Work: Where identification is to be applied to surfaces that require finish, install identification after completion of finish work.

E. Self-Adhesive Identification Products: Clean surfaces of dust, loose material, and oily films before applying.

F. Install painted identification as follows:
   1. Clean surfaces of dust, loose material, and oily films before painting.
   2. Prime Surfaces: For galvanized metal, use single-component, acrylic vehicle coating formulated for galvanized surfaces. For concrete masonry units, use heavy-duty, acrylic-resin block filler. For concrete surfaces, use clear, alkali-resistant, alkyd binder-type sealer.
   3. Apply one intermediate and one finish coat of silicone alkyd enamel.
   4. Apply primer and finish materials according to manufacturer's instructions.

G. Identify Raceways and Exposed Cables of Certain Systems with Color Banding: Band exposed and accessible raceways of the systems listed below for identification.

1. Bands: Pretensioned, snap-around, colored plastic sleeves; colored adhesive tape; or a combination of both. Make each color band 2 inches (51 mm) wide, complete encircling conduit, and place adjacent bands of two-color markings in contact, side by side.
2. Locate bands at changes in direction, at penetrations of walls and floors, at 50- foot (15 m) maximum intervals in straight runs, and at 25 feet (7.6 m) in congested areas.
3. Colors—as follows:
   a. Fire-Alarm System: Red.
   b. Fire-Suppression Supervisory and Control System: Red and yellow.
   c. Combined Fire-Alarm and Security System: Red and blue.
   d. Security System: Blue and yellow.
   e. Mechanical and Electrical Supervisory System: Green and blue.
   f. Telecommunications System: Green and yellow.

H. Install Circuit Identification Labels on Boxes: Label externally as follows:
   1. Exposed Boxes: Pressure-sensitive, self-adhesive plastic label on cover.
   2. Concealed Boxes: Plasticized card-stock tags.
   3. Labeling Legend: Permanent, waterproof listing of panel and circuit number or

equivalent.

I. Identify Paths of Underground Electrical Lines: During trench backfilling, for exterior underground power, control, signal, and communications lines, install continuous underground plastic line marker located directly above line at 6 to 8 inches (150 to 200 mm) below finished grade. Where multiple lines installed in a common trench or concrete envelop, do not exceed an overall width of 16 inches (400 mm); use a single line marker.
   1. Limit use of line markers to direct-buried cables.
   2. Install line marker for underground wiring, both direct buried and in raceway.

J. Color-Code Conductors: Secondary service, feeder, and branch circuit conductors throughout the secondary electrical system.
   1. 208/120-V System--as follows:
      a. Phase A: Black.
      b. Phase B: Red.
      c. Phase C: Blue.
      d. Neutral: White.
      e. Ground: Green.
   2. 480/277-V System--as follows:
      a. Phase A: Brown.
      b. Phase B: Orange.
      c. Phase C: Yellow.
      d. Neutral: Grey.
      e. Ground: Green.

   3. Factory-apply color the entire length of the conductors, except the following field- applied, color-coding methods may be used in lieu of factory-coded wire for sizes larger than No. 10 AWG.
      a. Colored, pressure-sensitive plastic tape in half-lapped turns for a distance of 6 inches (150 mm) from terminal points and in boxes where splices or taps or made. Apply the last two turns of tape with no tension to prevent possible unwinding. Use 1-inch (25 mm) wide tape in colors as specified. Adjust tape bands to avoid obscuring cable identification markings.
      b. Colored cable ties applied in groups of 3 ties of specified color to each wire at each terminal or splice point starting 3 inches (76 mm) from the terminal and spaced 3 inches (76 mm) apart. Apply with a special tool or pliers, tighten to a snug fit, and cut off excess length.
   4. For all system voltages:
      a. Isolated ground conductors: Green with yellow stripe.
      b. Mark with a 1” band of green tape, followed by a 1” band of yellow tape, followed by a 1” band of green tape.

K. Power Circuit Identification: Use metal tags or aluminum wraparound marker bands for cables, feeders, and power circuits in vaults, pull boxes, junction boxes, manholes, and switchboard rooms.
   1. Legend: 1/4 inch (6.4 mm) steel letter and number stamping embossing with legend corresponding to indicated circuit designations.
   2. Fasten tags with nylon cable ties; fasten bands using integral ears.

L. Apply identification to conductors as follows:

1. Conductors to be extended in the future: Indicate source and circuit numbers.
2. Multiple power or lighting circuits in the same enclosure: Identify each conductor with source, voltage, circuit number, and phase. Use color-coding for voltage and phase indication of secondary circuit.
3. Multiple control communications circuits in the same enclosure: Identify each conductor by its system and circuit designation. Use a consistent system of tags, color-coding, or cable marking tape.

M. Apply warning, caution, and instruction signs and stencils as follows:
1. Install warning, caution, and instruction signs where indicated or required to ensure safe operation and maintenance of electrical systems and of items to which they connect. Install engraved, plastic-laminated instruction signs with approved legend where instructions or explanations are needed for system or equipment operation. Install butyrate signs with metal backing for outdoor items.
2. Emergency-Operating Signs: Install engraved laminate signs with white legend on red background with minimum 3/8 inch (9 mm) high lettering for emergency instructions on power transfer, load shedding, and other emergency operations.

N. Install Identification as follows:
1. Apply equipment identification labels of engraved plastic laminate on each major unit of equipment, including central or master unit of each system. This includes communication, signal, and alarm systems, unless units are specified with their own self-explanatory identification. Except as otherwise indicated, provide a single line of text with 1/2 inch (13 mm) high lettering on a 1 1/2 inch (38 mm) high label; where two lines of text are required, use lettering 2 inches (51 mm) high. Use white lettering on black field. Apply labels for each unit of the following categories of equipment.
   a. Panel boards, electrical cabinets, and enclosures.
   b. Access doors and panels for concealed electrical items.
   c. Electrical switchgear and switchboards.
   e. Motor control centers.
   f. Motor starters.
   g. Push-button stations.
   h. Contactors.
   i. Remote-controlled switches.
   j. Dimmers.
   k. Control devices.
   l. Transformers.
   m. Telephone switching equipment.
   n. Clock/program master equipment.
   o. TV/audio monitoring master station.
   p. Fire-alarm master station or control panel.
   q. Security-monitoring master station or control panel.

2. Apply designation labels of engraved plastic laminate for disconnect switches, breakers, push-buttons, pilot lights, motor control centers, and similar items for power distribution and control components above, except panel boards and alarm/signal components where labeling is specified elsewhere. For panel boards, provide framed, typed circuit schedules with explicit description and identification of items controlled by each individual breaker.

END OF SECTION

SECTION 26 20 00 – LOW VOLTAGE ELECTRICAL TRANSMISSION

PART 1 – GENERAL

1.01 DESCRIPTION:

A. Work Included:

1. Provide all underground service conduits from the Utility Company's service point to the projects service equipment as indicated on the drawings and herein specified.

2. The Contractor shall consult the Utility Company before submitting bid to determine the exact location of the serving point and the work and material. The Contractor is required to leave the service installation complete and ready for cable installation without additional cost to the District. The service cable will be provided by the Utility Company and will be paid for by the District.

3. All work shall comply with the requirements of the Utility Company. Where required and indicated on the drawings, install outdoor transformer enclosure, pad and slab box, pull boxes or other equipment related to the service.

4. Transformers:

a. Transformers as specified and as indicated.

b. Provide mounting and seismic anchorage for all transformers complying with regulations of the State of California.

B. Switchboards and Protection Devices work Included:

1. Furnish, install and connect the switchboard, including metering facilities as required by the Power Utility Company.

2. All switchboards shall be complete with pull, service and distribution sections.

3. All protective devices shall have a minimum symmetrical short circuit interrupting rating, as described by the Utility and as indicated on the drawings complying with regulations of the State of California.

4. Provide mounting and seismic anchorage for all switchboards.

C. Panelboards Work Included: Lighting and power distribution facilities, including panel boards.

D. Motor Control and Control Devices Work included:
1. The connection to the terminals of motors, the furnishing and installation of disconnect switches, motor starters and control devices for motors.

E. Related Work:
1. Basic Electrical Requirements and Materials.
2. Excavating, Backfilling and Compacting.
3. Concrete.

1.02 REQUIREMENTS:

A. Comply with the requirements of the Utility Company having jurisdiction.

B. The interrupting capacity of the main circuit breaker and distribution circuit breakers shall be equal to or greater than the available short circuit current at the point as obtained by the Utility Company or computed by the Engineer. Selective coordination between main and all other feeder circuit breakers throughout the distribution system is required by the approved manufacturer of electrical power distribution equipment.

1.03 TRANSFORMER REQUIREMENTS:

A. Transformers, Dry Type: Distribution transformers shall be constructed and tested in accordance with ASA and NEMA Standards, and shall be wound with copper conductors. Performance of transformers shall be equal to or exceed ASA and NEMA published criteria.

B. Transformers shall be self-cooled type with Class H, NEMA, Group 111 insulation and a temperature rise of 150 ^{o} C under continuous full load conditions with an ambient of 400°C.

C. Transformers supplying voltage to wave altering devices (computers, electronic ballasts, etc.) shall be K rated.

D. Transformers shall be equipped with four 2 1/2% taps (2 above and 2 below normal voltage). Windings shall be of the fire-resistant type, designed for natural convection cooling through normal air circulation.

E. Core mounting frames and enclosures shall be of welded and bolted construction with sufficient mechanical strength and rigidity to withstand shipping, erection and short circuit stresses.

F. Enclosure cover plates shall be Code gauge sheet steel, captive bolted to the enclosure

framework. Enclosure shall have suitable ventilating openings with rodent-proof screens. Enclosure shall be provided with lifting lugs and jacking plates as required.

G. Transformers shall be furnished complete with mounting channels and mounting bolts. Metal parts, except cores and core mounting frames, shall be cleaned, rust-proofed and given a heavy coating of an inert primer.

H. Transformers used indoors shall be “low noise.” They shall be provided with vibration dampers. Size and number of shock mounts shall be in accordance with manufacturer's recommendations.

1.04 MOTOR CONTROL AND DEVICES REQUIREMENTS:

Motor running protection of the manual reset type, as a separate device or as part of a motor starter and set at not to exceed 125% of the motor full load current rating, shall be provided for each motor exceeding 1/8 HP in size, except where indicated otherwise and except for the following: Motors of sufficient impedance to prevent overheating or failure to start (such as clock motors), and motors provided with an approved built in manual reset type device, responsive to motor current and set at not to exceed 125% of the motor full load current rating, which will interrupt all current to the motor.

1.05 SUBMITTALS:

A. All submittals shall be made in accordance with Section 01300.

B. Product Data: Submit catalogs indicating make, capacity, size and catalog number for disconnect switches, motor starters and control devices.

C. Shop Drawings: Include make, catalog number, dimensions, finish, type, insulation, class design temperature and taps provided. Include regulation at 80% and 100% of full load, no load loss, full load loss, percent efficiency, percent impedance, noise level and continuous capacity rating. Provide a connection schematic.

D. Test Reports:

1. No-Load Losses.
2. Total Losses.
3. Applied Voltage.
4. Temperature Rise.
5. Induced Voltage.
6. Sound Level.
7. Impulse Test.

E. Transformer Submittals:

1. Include a front elevation showing the dimensions and the locations of the equipment on the switchboard, the make, kind and size or capacity of all equipment and bussing, the location of each service conduit entering the switchboard, all barriers, nameplate inscriptions, finish, total weight, size of switchboard, and locations and sizes of anchor bolts.

2. Coordination curves shall be provided by the manufacturer for the main circuit breaker and all distribution circuit breakers in the power and lighting electrical distribution systems.

F. Record Drawings: Provide a single reproducible drawing of the project as installed, showing all circuit numbers.

G. Panelboards Shop Drawings: Include a front elevation, indicate circuit numbers, devices and ratings, cabinet dimensions, make, ratings, nameplate, location and capacity of equipment, size of gutters, type of mounting, finish and catalog number of locks.

1.04 DESIGN REQUIREMENTS:

A. Lighting and Appliances Panel boards:

1. Lighting and appliance panel boards shall be wall-mounted, enclosed, safety type with 277/480 volts, 4-wire or 120/208 volts, 4-wire surface or flush mounting, neutral mechanical equipment ground and main as indicated on the drawings or specified. First panel boards of each separate building shall be provided with main and/or sub-feeder circuit breakers where so indicated or specified.

2. Single-pole branches for 120/208 volt panels shall be molded case, bolt on, thermal magnetic circuit breakers with inverse time delay, trip-free, quick-make, quick-break mechanism and silver alloy contacts. Circuit breakers shall be rated 20 amps, 120 volts, except where otherwise indicated on the drawings, and the amp rating shall be marked on the handle and indicate "ON - OFF" and tripped positions. Single-pole branches for 277/480-volt panels shall be the same as for 120/208-volt panels, except they shall be thermal magnetic circuit breakers only with higher voltage rating. Ground fault interrupters shall be incorporated into circuit breakers where indicated and shall be listed by Underwriters' Laboratory as a ground fault device.

3. Two- and three-pole branch circuit shall be enclosed and shall be bolt-on, thermal magnetic with inverse time delay, non-tamperable, ambient compensated, single handle with no tie-bar, common-trip, quick-make and quick-break mechanism with silver alloy contacts. Circuit breakers shall be rated as indicated on the drawings.

4. Main and subfeeder circuit breakers shall be enclosed, bolt-on thermal magnetic type with inverse time delay, single-handle common-trip, quick-make, quick-break mechanism, corrosion resistant bearings and silver alloy contacts. Amp frame size and trip rating shall be as indicated on the drawings. Breakers over 225 amperes shall have interchangeable trip units. The handles of main and subfeeder circuit breakers shall be under the cabinet door. Voltage rating shall be as indicated on the drawings.

5. All circuit breakers shall be one-piece, bolt-on type and shall meet the short circuit interrupting capacity requirements shown on the drawings. All one-pole, two-pole, three-pole circuit breakers shall be rated for minimum 10,000 amps interrupt capacity, unless otherwise indicated on the drawings.

6. All internal connections shall be made with plated copper bus bars, and the busses shall extend for the full length of the space available for branch circuit breakers. Feeder cable connectors shall be installed at point of feeder entrance. All terminals shall have copper conductors. Panel boards fed by conductors having over-current protection greater than 200 amps shall be protected on the supply side by over-current devices having a rating not greater than that of the panel board.

7. Except where otherwise indicated, circuit breakers shall be in two vertical rows connected to the bus bars in a distributed phase arrangement. Two-pole branches shall be balanced on the busses. Each single-pole branch shall be numbered adjacent to its circuit breaker with odd numbers on the left and even numbers on the right.

8. All specified circuit breaker spaces shall include necessary hardware required for future installation of the circuit breakers.

B. Panel board Cabinets:

1. Panel board cabinets shall be Code gauge galvanized steel or blue steel; fronts, doors, and trims shall be code gauge furniture steel. The width of the cabinets shall be 20".

2. Doors shall be cut true, shall accurately fit opening and finish smooth across the joints. Rabbets shall be inside. The hinges shall be entirely concealed, except for barrels and pins. Hinge flanges shall be welded to the door and trim. Each door shall be equipped with flush type lock, spring latching, Corbin lock for metal door, keyed to Yale LL 803 or LL 134.

3. Where contactors, time switches and control devices are specified or indicated to be installed within panel board cabinets, a separate compartment and lockable door shall be provided at the top of the cabinet for such devices. The door shall be sized as required to permit removal of the contactor and other devices intact. Gutters shall be provided at the sides and top of the compartment.

C. Panel Board Schedule:

The Contractor shall prepare a neatly type written schedule with the number or name of the room or area of the equipment served by each panel board circuit. The room numbers or names used shall match those as determined at the site and shall not necessarily be those used on the drawings. The schedule shall also indicate the panel designation, voltage and phase, the building and distribution panel or switchboard from which it is fed. The schedule shall be mounted in a frame under transparent plastic 1/32” thick on the inside of each panel board cabinet door.

D. Signal and Communication Terminal Cabinets:

1. All terminal cabinets shall conform in every respect to the Specifications for Panel board Cabinets, except as modified herein.

2. All terminal cabinets shall be flush type, unless otherwise noted, with 2" trim and separate door with lock over each section, unless otherwise indicated or specified. Cabinets shall be provided with barriers to separate each system. Cabinets over 24" in width shall be provided with double door and lock. Each terminal cabinet, or section of a terminal housing a separate system, shall measure 12" wide x 18" high x 5 3/4" deep, unless otherwise indicated on the drawings. Trims for sectional cabinets shall be of one-piece construction.

3. All terminal cabinets shall be equipped with 1/2” thick plywood backboards within the cabinets and fastened in place with machine screws. Backboards shall be the largest size the cabinet and conduit terminations will permit.

4. Flush mounting terminal cabinets shall be finished as specified for flush mounting panel board cabinets. Surface mounted terminal cabinets shall be finished as specified for surface mounting panel board cabinets.

PART 2 – PRODUCTS

2.01 MATERIALS:

A. Transformer Pads: Concrete transformer pads shall be provided as indicated on the drawings and as specified under the Concrete Section of the Specifications.

B. Service Conduits: Utility conduits must comply with all Utility Company's requirements.

2.02 TRANSFORMER EQUIPMENT:

A. Transformers shall be by Square D, General Electric, or equal dry type (interior) all- copper windings.

2.03 SWITCHBOARDS:

A. General Description: Switchboards shall be the products of Square D, General Electric or equal, unless otherwise specified (600 amp minimum, all copper components), and shall conform to the following requirements:

1. All switchboards shall be floor standing, dead front, dead rear, line bussed, front operated and connected, circuit breaker type, unless otherwise indicated, and shall contain the equipment indicated and specified. Switchboard shall be complete with pull, service and distribution sections.

2. The required equipment shall be enclosed in fully interchangeable die formed steel sectional cabinets with top and bottom plates and required braces and gussets all welded together in such a manner that the cabinets will be absolutely rigid, plumb and uniform in size. Each cabinet shall be a separate and independent unit with all assembly holes die stamped or jig drilled and openings for interconnections so placed that any cabinet can be located at any position in the assembly without drilling or cutting holes on the job. Deliver the switchboard to the site in completely assembled sections and provide all required assembly bolts and blanking plates. The front plates and doors shall be die formed steel, of not less than 12 gauge furniture steel, completely removable, secured to the cabinet with oval head machine screws with cup washers, uniformly and symmetrically spaced.

3. Breakers shall be automatic, one-piece molded-case, trip-free, common-trip, quick-make, quick-break, thermal-magnetic type bolted to the bus with handles clearly indicating rating in amps and tripped position. Breakers shall have a single handle with no tie-bar. Voltage, amperage and number of poles shall be as indicated on drawings. Breakers shall have lock-out provisions approved by the State for padlocking and shall have a minimum symmetrical short circuit interrupting rating, as determined by the Utility Company and as indicated on the drawings.

4. The meter panel or plate shall meet all requirements of the respective serving Utility and shall be equipped with the fittings required by the serving Utility.

5. Provide silver plated copper bus bars of the capacity as indicated on the drawings between the current transformer and the main section and the distribution sections; also, the full height of the available breaker space in the distribution portions. Bus bar bracing shall be designed to withstand maximum available short circuit current. Provide service cable lugs as required by the Utility Company. Copper bus bars shall be rated at a minimum of 1000 amps per square inch of cross-sectional area. Heat test rating on the bus bars are not acceptable in lieu of the required cross-sectional area.

6. Provide a nameplate for each component on the switchboard. Plates shall indicate the designation of the service, or feeders controlled and the fuse size. Provide a similar nameplate for meters and transformer compartments.

7. Paint the cabinets, framework and all plates inside and out with one coat of rust resisting metal primer and one coat of grey enamel, baked on, or lacquer sprayed on.

8. Manufacture the boards according to standardized drawings and Specifications, which are available for checking, and prepare Shop Drawings and submit for approval. The switchboard shall meet the requirements of all legally constituted authorities having jurisdiction and the respective serving Utility.

9. For the grounded electrical wye service switchboard, provide ground fault protection for the main device. The ground fault protection shall be listed and approved by U.L. and shall consist of a ground sensor encircling all phase conductors and neutral connected to a solid-state ground relay which initiates tripping of the circuit interrupting device. The manufacturer shall provide all necessary testing equipment at the site and perform a certified test on the ground protection system in the presence of the District Inspector, Electrical Engineer, and State of California Inspectors during a scheduled "pre-final" observation visit by the Electrical Engineer. All ground fault settings shall not exceed 10% of the main circuit board rating at .2 seconds, unless otherwise indicated.

B. Building Main Switchboard:

1. Building main switchboard shall be of the floor standing metal clad dead front type. Arrangement and construction shall be as indicated and specified. Design, construction and testing shall comply with all Code requirements and applicable ASA, AIEE and NEMA Standards. Structural elements of cubicles shall consist of standard rolled shapes or formed sheet steel members with a 12-gauge minimum thickness. Construction shall be of the bolted or welded type with sufficient mechanical strength to maintain rigidity under shipping, erection, or short circuit stresses. Cubicles shall be insulated and enclosed with captive bolted P & O Mill prime or cold rolled sheet steel covers. End cubicles shall be provided with blanking plates for future additions. Switchboard shall not exceed 91" in height, including wiring gutters or pull spaces. All steel work shall be sanded, cleaned, rustproofed and primed. Finish coating shall be factory standard. Construction marks or damaged surfaces shall be refinished at the job site to match original finish.

2. Bus work and connections shall be hard drawn copper bars having a minimum conductivity of 98%. Current density for copper shall not exceed 1,000 amps per square inch for connections. Continuous full load temperature rise shall not exceed Code and NEMA requirements. Bus structure shall be free fitted, and shall have sufficient strength and rigidity to withstand short circuits of the magnitude shown on the drawings, without

damage or permanent distortion. Connections shall be silver plated and securely bolted together. Fastening bolts shall be nonmagnetic corrosion resistant plated steel or electrical bronze, secured with constant pressure type locking devices. Insulating supports shall be made of high strength impact resistant, flame retardant material. Connections for incoming and outgoing cables shall be supplied with heavy duty pressure type terminal lugs. Cables and internal wiring shall be supported with suitable bolted cleats. Arrangement of incoming and outgoing feeder cables shall be as shown on the drawings or as required. Neutral bus shall have terminals for all active, spare or inactive circuits.

3. Current transformer mounting facilities and metering mounting facilities shall be provided in accordance with Utility Company requirements.

4. Main fusible switch shall be quick-make, quick-break type and shall be equipped with current limiting fuses of the size and capacity indicated on the drawings. Main switch shall have a minimum short circuit interrupting rating of not less than the available symmetrical amperes determined by the Utility Company as indicated on the drawings.

5. Feeder branch circuit breakers shall be bolt-on molded case type, quick-make, quick-break, minimum 480 volts rated, with thermal magnetic trips of frame size and trip rating indicated on drawings. Feeder breakers shall have a minimum short circuit interrupting rating in symmetrical amperes as indicated on the drawings.

6. Nameplates shall be furnished for each device. A large nameplate identifying the switchboard, showing service voltage, function and current rating shall be supplied.

7. Provide a minimum of 1" grout under switchboards.

C. 120/208 volts Distribution Switchboards:

1. 120/208 volts Distribution Switchboards shall be of the convertible floor-standing metal clad dead front type for three-phase, four-wire service. Arrangement and location, including the number of circuit breakers, active and inactive spares, bussing and other details shall be as shown on the drawings or schedules. Circuit breakers shall be of the bolted-on molded case type, with thermal magnetic trips and shall be rated at 250 volts with frame sizes, number of poles and trip settings shown on the drawings or schedules. Minimum interrupting capacity shall be as indicated on the drawings.

2. Temperature rise and current-carrying capacity of busses and parts shall be in accordance with NEMA Standards and NEC requirements. Components shall possess sufficient strength and rigidity to safely withstand any stresses imposed by shipping, erection or short circuits. Identification nameplates and cardholders shall be provided in accordance with the paragraph entitled “Identification of Circuits and Equipment.” Neutral bar shall have terminals for all active, spare or inactive circuits.

3. Lock-off provisions shall be included for all circuit breakers. Padlocking device shall be permanently secured to the panel deadfront plate.

4. Provide a minimum of 1" grout under all switchboards.

D. Multi-pole Circuit Breakers: Multi-pole circuit breakers shall have a common operating handle. Construction shall be in accordance with Paragraph 2.01 B5. Phase sequence and circuit numbering shall be uniform. Temperature rise and current carrying capacity of parts shall be in accordance with NEMA Standards and NEC requirements. Components shall possess sufficient mechanical strength and rigidity to safely withstand any stresses imposed by shipping, erection or short circuits. Lock-off provisions shall be included for all circuit breakers.

2.04 CIRCUIT BREAKER ENCLOSURES:

Circuit breaker enclosures shall be U.L. listed, suitable for use as service entrance equipment. The short circuit current rating of an enclosed circuit breaker shall equal the interrupting rating of the supply components' upstream of the unit.

2.05 PANELBOARDS EQUIPMENT:

All panel boards shall be manufactured by Square D, General Electric or equal, unless otherwise specified by the District.

2.06 MOTOR CONTROLS AND CONTROL DEVICES EQUIPMENT:

A. Disconnect Switches:

1. Switches shall be 480 volts or 600 volts, totally enclosed, externally operated, with quick-make, quick-break operating mechanism, interlocked cover with provisions for locking the cover in the closed position and locking the switch in ON and OFF positions. Switches shall be single throw, unless otherwise indicated or specified.

2. Switch enclosure shall be general purpose NEMA Type 1 for indoor locations, and rain tight NEMA Type 3R for outdoor locations, except where otherwise specified. Switches shall be fusible or non-fusible as indicated on the drawings. Fusible switches shall accept cartridge fuses. Current rating of switches, number of poles, solid neutral facilities, and the current rating of fuses shall be as indicated on the drawings. Switches shall have the proper horsepower rating equal to or greater than the horsepower of the motor controlled. Only the lower horsepower rating of dual rated switches will be accepted as a switch rating.

3. A padlocking device shall lock the operating handle and cover with one padlock in both the ON or OFF positions. Switches shall be heavy-duty type, manufactured by General

Electric, Westinghouse or Square D. Furnish one padlock and two keys with each switch. Padlock shall be keyed to Master 611 or M-20.

4. Motors 1/3 HP and less: Switches shall be of the toggle type, quick-make, quick-break, rated 2 HP, 250 volts, AC with the number of poles required, provided with wall plate for flush mounting, or in Code approved surface mounting NEMA enclosures. Switches and enclosures shall be weatherproof NEMA 3R when mounted outdoors.

B. Motor Starters:

1. Motor starters shall be AC magnetic across line starters, unless otherwise indicated on the drawings.

2. AC magnetic across the line starters shall have manual reset thermal overload protective devices, including heating elements and, unless otherwise indicated or specified, shall be housed in general purpose enclosures with start-stop-reset device or H.O.A. switch as indicated on drawings, built-in and operable from the front and low voltage protection. The NEMA size, voltage rating, number of poles, and special features shall be as indicated on the drawings. The horsepower rating of each starter shall be equal to or greater than the motor horsepower. Starters for motor circuits rated above 240 volts and which are controlled at locations other than the starter, shall be provided with a control circuit transformer having 120 volts secondary as required. Combination magnetic starters are acceptable. Three-phase starters shall have three-element protection.

3. Thermal switch starters shall be tumbler type with plaster ears, binding screws for wiring, standard size composition cups which fully enclose the mechanism, and shall be designed to fit standard outlet boxes. Thermal switches shall be fractional horsepower motor starters with thermal overload protective devices including heating elements and with handle providing ON-OFF-RESET control. The horsepower rating, voltage rating, and number of poles shall be determined from the motor horsepower and the voltage indicated on the drawings. Switches shall be key-operated where so indicated on the drawings. Furnish one key with each key type switch. The horsepower rating of each switch shall be equal to or greater than the motor horsepower.
4. Relays used for directly controlling motors shall have general purpose enclosures, unless otherwise indicated or specified and shall be horsepower rated. The relay size, voltage rating and number of poles shall be determined from the motor horsepower and voltage indicated on the drawings.

PART 3 – EXECUTION

3.01 INSTALLATION:

A. The service conduits shall terminate at the service point as indicated on the drawings and

shall extend underground to the main service terminating pull section as indicated. All bends in the conduits shall be long radius type and all sweeps shall have a radius of not less than ten times the conduit trade size. Underground conduits shall be encased in concrete with a minimum 3" thick cover on all sides with multiple conduits spaced not less than 1 1/2" apart.

B. The service cable shall be connected to the service terminating pull section by the Utility Company.

3.02 CONDUITS CROSSING PUBLIC DEDICATED PROPERTY:

Where service or other conduits cross any public dedicated property, the Contractor shall make the necessary arrangements to open and close the public property and shall pay all costs in connection with the required licenses, permits, fees and deposits. The conduits shall be installed in a manner required by the authorities having jurisdiction.

3.03 STRUCTURAL CONDITIONS:

A. Where conduits are to pass through or interfere with any structural member, or where notching, boring or cutting of the structure is necessary, or where special openings are required through walls, floors, footings, or other building elements to accommodate the electrical work, all such work shall be done as directed and approved by the Architect or designated District representative.

B. The placement of conduits in concrete slabs and structural members shall comply with the requirements of the applicable Section of CCR Title 21, Public Works and shall be as approved by the Architect.

C. Where a concrete encasement for underground conduits abuts a foundation wall or underground structure which the conduits enter, the encasement shall be maintained in position in relation to the structure as indicated on the drawings, or rest on a haunch integral with the wall or structure, or shall extend down to the footing projection, or shall be doweled into the structure. Underground structures shall include pull boxes and buildings.

D. All cutting and patching of the rough and finish construction work shall be done as required for the installation of the work under this Section. Patching shall be of the same materials, workmanship and finish as, and shall accurately match the surrounding work. The work shall be done under the instruction of the Architect.

3.04 TRANSFORMER INSTALLATION:

A. Transformer core frame shall be installed level on shock absorbing pads within the enclosure.

B. Mounting bolts on floor-mounted transformers shall be extended into pads only and shall not be in direct contact with building structural members.

C. Flexible jumpers shall be installed for grounding continuity from enclosure to conduits.

3.05 TRANSFORMER VOLTAGE CHECK:

A. The Contractor shall set the taps on all transformers (which are a part of this contract) as necessary to provide satisfactory operating voltages with all present loads energized. A check shall be made in the presence of the District Inspector at a panel fed from each transformer and which is the farthest from the transformer. Voltages at the transformers ranging from 118 to 122 volts inclusive, for 120-volt systems and proportionately equivalent for higher voltage systems, are acceptable.

B. The Contractor shall provide all instruments and accessories required to perform the checks. Volt meters shall be accurate within 1% and shall have scales permitting the voltage readings to be made on the upper half of the scale. Calibration of the meters shall be satisfactory to the District.

3.06 SWITCHBOARD AND PROTECTION DEVICES INSTALLATION:

Torque valves for tightening of wire lugs or any wire/cable connections shall be the minimum as recommended by the manufacturer.

3.07 SWITCHBOARD AND PROTECTION DEVICES PADS AND ANCHORING:
Where free standing equipment is installed, concrete pads shall be provided as described under Division 3, Concrete, and as detailed on the drawings. Where a utility meter is housed in a switchboard, the pad shall extend 3' from the face of the switchboard door or board, whichever is greater. Anchor bolts for free standing equipment shall be designed to meet State Seismic requirements. Equipment shall be anchored to new slab with expansion bolts as indicated on the drawings. All anchor bolts shall be tested to withstand minimum torque as indicated on the drawings.

3.08 SWITCHBOARD AND PROTECTION DEVICES TESTING:

A. All systems of wiring shall be so installed that when completed, the systems will be free from short circuits and from grounds, other than required grounds. The Contractor shall provide all instruments for testing and shall demonstrate in the presence of the District Electrical Inspector that each system of wiring meets the following minimum requirements for insulation resistance:

1. For circuits of No. 2 AWG or larger conductors, a resistance shall be based on the following allowable current-carrying capacity of conductors:

25 to 50 amperes inclusive ----------	250,000 ohms
51 to 100 amperes inclusive ----------	100,000 ohms
101 to 200 amperes inclusive ----------	50,000 ohms
201 to 400 amperes inclusive ----------	25,000 ohms
401 to 800 amperes inclusive ----------	12,000 ohms
Over 800 amperes inclusive ----------	5,000 ohms

2. The above values shall be obtained with all switchboards, fuse holders, switches, and over current devices in place and connected and all switches closed.

B. The Contractor shall provide a Meager insulation tester which applies a minimum of 500 volts direct current for the tests when requested by the District Inspector.

3.09 PANELBOARDS INSTALLATION:

A. Fronts shall be flush type, unless otherwise indicated and shall be fastened to the cabinets with 1/4" No. 20, nickel plated oval headed machine screws and cup washers. Sufficient screws shall be installed to prevent buckling or warping of the panel front. Flush type fronts shall be aligned plumb and square and cabinet shall be drilled and tapped for cover screws at the site to accomplish this if necessary.

B. All surfaces of flush mounted panel board cabinets shall be galvanized. The fronts shall be given two coats of metal primer, and a finish coat of baked on gray enamel and shall not be installed on the cabinets until after the finish coats of paint have been applied to the wall and cabinet fronts and they are thoroughly dry. Screws and cup washers shall not be painted.

C. All surfaces of surface mounted cabinets and fronts shall be given one coat of metal primer and a finish coat of baked on gray enamel.

D. Panel board cabinets shall be rigidly supported in place independent of the conduits.

3.10 PANELBOARDS, MODIFICTION OF EXISTING SURFACE MOUNTED PANELS:

A. When an existing flush mounted panel is to be abandoned. Remove existing bussing, breakers and covers. Install new panel with one of the following methods:

1. Provide new weatherproof surface mounted cabinet over existing flush panel cabinet. New cabinet shall be sized to fit over existing panel with hinged padlock able door. Back cover of new cabinet shall be cut to fit the existing panel’s opening. Make sure old panel has clean surface for a sufficient ground. All cut edges shall be grounded smooth. Drill edge of new cabinets back cover and existing panel front and secure with ¼-20 nuts and bolts, lockwashers, new cabinet shall be used as a pull box.

2. Provide new weatherproof surface mounted panel on wall, new panel shall have breakers per panel schedule. Secure to existing wall next to new surface cabinet. Run between new panel and new cabinet: one 2” C with new feeders to new panel: two 2” c with new wiring as required to connect existing and new branch wiring.

3. Remove existing panel front, buss assembly, circuit breakers and ground bar, provide a new solid cover with a continuous gasket around parameter to blank off existing enclosure. New cover shall be manufactured of 12 ga. Sheet metal and shall be primer coated for final finish coat by the painting contractor. Attach new solid cover to existing panel enclosure with galv. Tamperproof screws. Contractor shall field verify exact dimensions of existing enclosure. Provide four 2-1/2” conduit nipples between existing panel. Pick up and extend existing feeders and all branch circuits to the new panel and reconnect to matching circuit breakers. Provide power distribution / terminal blocks as required. Bond and ground new panel per CEC article 250.

END OF SECTION

SECTION 272000 – DATA CABLING AND EQUIPMENT

PART 1 – GENERAL

1.1 SCOPE

A. Furnish and install the following:
   1. All Category 6 Data Cable, Jacks and related terminations.
   2. All Fiber Optic Cable, Jacks, Inner duct, and related terminations.
   3. Wiring Cabinets complete with necessary Category 6 and Fiber Optic Patch Panels and required Patch Cables.
   4. Testing and certification of Fiber Optic cable and terminations.
   5. Testing and certification of Category 6 cable and terminations.
   6. Switches shall be provided by the owner and installed by the contractor.

B. Where Reference is made to Category 6 in this Specification it shall mean the latest currently available EIA/TIA Category 6 Standards, including the latest revisions to these standards.

1.2 QUALITY ASSURANCE

A. Contractor shall have successful experience in executing projects of this type and scope.
   1. Submit with Bid, a list of projects to provide proof of required experience, including the following:
      a. Description of project.
      b. Name, address and phone number of Owner.
      c. Name and phone number of Owner's contact person having knowledge of the project.
      d. Approximate cost of the data cabling and associated electrical work for the project.
   2. The Proposal shall include a list of all workmen the contractor proposes to use for the data-cabling portion of this project.
   3. This list shall include:
      a. Name of worker.
      b. Worker's resume showing training and experience.
      c. List of contact persons and their telephone numbers.
   4. Each worker proposed for work in the data cabling portion of this work shall present a Certificate of Completion of Training in Fiber Optic and Category 6 cabling.
      a. Only workers with Certificates of Fiber Optic training may perform work in that area.
      b. Only workers with Certificates of Category 6 training may perform work in that area.
   5. The District Inspector or Project Manager may ask any or all data cabling workers to demonstrate their skill level before performing any work or continuing work.
   6. If, in the opinion of the District, any worker is found to be deficient in this area, the

Contractor must immediately provide necessary training to remove the deficiency or replace the worker with one having the required skills.

7. The Contractor shall use adequate numbers of skilled workmen who are thoroughly trained and experienced on the necessary crafts and completely familiar with the specified requirements and methods needed for the proper performance of the work.
8. The Contractor must provide a Project Manager who has demonstrated the ability to supervise a Data LAN project.
9. The Project Manager must be available to be interviewed by FUSD and/or their representative, and must be deemed acceptable by FUSD and/or their representative.
10. Acceptance will not be unreasonably withheld.
11. The Project Manager must be available to attend meetings as required.
12. The work of this section shall conform to California Code of Regulations, Part 3, and all other applicable codes and standards.
13. Only a qualified Contractor holding licenses required by legally constituted authorities having jurisdiction over the work shall do work.
14. Contractor shall have completed similar projects of equal scope to systems described herein and shall have been engaged in business of supplying and installing specified type of systems for at least five years.
15. Use equipment manufacturers certified contractors.
16. Manufacturer shall warranty availability of spare parts common to proposed system for a period no less than that stipulated within the California Multiple Award Schedule (CMAS) terms and conditions.
17. If no time period is contractually stipulated, the Contractor shall provide a warranty of five years.
18. Contractor shall warranty that all work executed and materials furnished shall be free from defects of material and workmanship for a period of two years from acceptance date of Contract Completion, excluding specific items of work that require a warranty of a greater period as set forth in this Specification.
19. Immediately upon receipt of written notice from the District, the Contractor shall repair or replace, at no expense to the District, any defective material or work that may be discovered before final acceptance of work or within warranty period; any material or work damaged thereby; and adjacent material or work that may be displaced in repair or replacement.
20. Examination of or failure to examine work by the District shall not relieve Contractor from these obligations.
21. Contractor shall have a service organization capable of responding to warranty service requests within 24 hours of receipt of written notification and resolution within five working days for MDF equipment and 15 working days for IDF equipment located either in the IDF or computer laboratory.
22. If Contractor fails to repair or replace material or work indicated above within 15 days of receiving written notice, the District, with its own personnel or by Contract, may proceed with repair or replacement and assess cost against Contractor, if Contractor does not respond accordingly.
23. Persons skilled in trade represented by work, and in accordance with all applicable building codes, shall install system in accordance with best trade practice.
24. Contractor shall include in the Material List Submission copies of the manufacturer's certifications that the Contractor is an authorized distributor of the submitted manufacturers' products and has been adequately trained in the

installation of those products.

25. This applies to all fiber optic components and fiber optic cable.
26. Contractor shall include in the Material List Submission a list of five projects of similar scope acceptable to the District and shall have a service organization capable of responding to warranty service requests within 24 hours of receipt of written notification and resolution within one day for MDF equipment and five days for IDF equipment located either in the classroom, IDF or computer laboratory.
27. Contractor shall include the telephone number of the customer's client contact for each project and a letter signed by a corporate officer, partner, or Owner of the contracting company describing the service capability of the company and stating the company's commitment to maintain that service capability through the warranty period.

B. All work and materials shall be in full accordance with the latest rules and regulations of the following codes, industry standards and references:

1. State of California:
   a. Title 24, Building Standards, State of California.
   b. Occupational Safety and Health Act (OSHA).
   c. Title 8, Electrical Safety, State of California.
   d. Title 19, California Code of Regulations.
2. Telecommunications Industry Association/Electronics Industry Association(TIA/EIA).
   a. ANSI/TIA/EIA-STD-RS455, Standard Test Procedures for Fiber Optic Fibers, Transducers, Connecting and Terminating Devices.
   b. Telecommunications Industry Association/Electronic Industry Association (TIA/EIA) Standard 569, Commercial Building Standard for Telecommunications Pathways and Spaces.
3. BICSI-Telecommunications Distribution Methods Manual, Volumes #1 and 2.
4. Underwriters Laboratories Inc. (UL): Applicable listings and ratings.
5. UL LAN Cable Certification Level 5.
6. California Electric Code (Articles 770, 800, latest issue).
7. National, State, and Local Occupational Safety and Health Administration (OSHA) building and fire codes.
8. ANSI/TIA/EIA Telecommunications Building Wiring Standards.
9. ANSI/TIA/EIA-568-A, Commercial Building Telecommunications Cabling Standard (October 1995).
10. ANSI/TIA/EIA-568-A-2, Corrections and Additions to TIA/EIA-568-A-2(August1998).
11. ANSI/TIA/EIA-568-A-3, Addendum No. 3 to TIA/EIA-568-A (December 1998).
12. ANSI/TIA/EIA-568-A-5, Transmission Performance Specifications for 4-Pair 100 ohm Category 5E Cabling (February 2000).
13. ANSI/TIA/EIA-568-B-3, Optical Fiber Cabling Components Standard (March2000).
14. ANSI/TIA/EIA-569-A, Commercial Building Standard for Telecommunications Pathways and Spaces (February 1998).
15. ANSI/TIA/EIA-569-A-1, Commercial Building Standard for Telecommunications Pathways and Spaces Addendum 1 – Surface Raceways (March 2000).
16. ANSI/EIA/TIA-598-A, Optical Fiber Cable Color Coding (May 1995).
17. ANSI/TIA/EIA-606, The Administration Standard for the Telecommunications Infrastructure of Commercial Building (February 1993).
18. ANSI/TIA/EIA-607, Commercial Building Grounding and Bonding Requirements for Telecommunications (August 1994).
19. ANSI/TIA/EIA-758, Customer-Owned Outside Plant Telecommunications

Cabling Standard (April 1999).

20. ANSI/TIA/EIA-758-1, Addendum No. 1 to TIA/EIA-758, Customer-Owned Outside Plant Telecommunications Cabling Standard (March 1999).
21. TIA/EIA TSB-67, Transmission Performance Specifications for Field Testing of Unshielded Twisted-Pair Cabling Systems (October 1995).
22. TIA/EIA TSB-72, Centralized Optical Fiber Cabling Guidelines (October1995).
23. Institute of Electrical and Electronic Engineers (IEEE) 802.3 (Ethernet), 802.3Z (Gigabit Ethernet over optical fiber), 802.3ab (Gigabit Ethernet over 4-pair Category 6 or higher), 802.11 (Wireless LAN).
24. BICSI Telecommunications Distribution Methods Manual (2000 or latest).
25. FCC Part 68.50.
26. National Electrical Manufacturer's Association (NEMA).
27. National Fire Protection Association (NFPA), NFPA-70.
28. CCR Part 3 - California Electrical Code.
29. CCR Part 2 - Uniform Building Code.
30. ITU H.225.0, Call Signaling Protocols and Media Stream Packetization for Packet-based Multimedia (Includes Q.321 and RAS).
31. ITU H.223.0 Annex G, Gatekeeper to Gatekeeper (Interdomain)Communication.
32. ITU H.235, Security and Encryption for H-Series Multimedia Terminals.
33. ITU H.245, Control Protocol for Multimedia Communication.
34. ITU H.450.x, Supplementary Services for Multimedia.
35. Generic Functional Protocol for the Support of Supplementary Services in H.323.
36. Call Transfer.
37. Call Diversion.
38. Call Hold.
39. Call Park and Pick-up.
40. Call Waiting.
41. Message Waiting.
42. Identification Services.
43. ITU H.323, Packet-based Multimedia Communications Systems.
44. ITU H.323 Annex E, Call Connection Over UDP.
45. ITU H.323 Annex F, Single-use Device.
46. ITU I.120 Series, Data Protocols for Multimedia Conferencing.

C. Nothing in the drawings or specifications is to be construed to permit work not conforming to the codes or standards.

D. These codes or standards are to be considered minimum requirements.

E. Should the plans or specifications call for material, methods or construction of a higher standard, the plans or specifications shall govern.

1.3 EXISTING CONDITIONS

A. Contractor shall be held to have visited the site prior to submitting proposal to determine existing conditions, nature of materials to be encountered and to evaluate other information affecting the work to be performed.

B. Protect and maintain all existing pipe lines, conduits, and structures.

C. Do not interfere with their safe operation.

D. Should damage occur notify the appropriate utility and the District at phone number 559-457-3000.

E. Damage costs are the responsibility of the contractor.

PART 2 – PRODUCTS

2.1 INSIDE PLANT CATEGORY 6 CABLE, UTP:

A. Cable shall meet, as a minimum, the requirements of the latest currently available EIA/TIA Category 6 standards.

B. Cable shall be round 24 AWG 4 pair with solid conductors, non-plenum, high-density polyethylene, with flame retardant PVC Jacket.

C. Individual conductor insulation shall be color coded per TIA/EIA specifications.

D. Characteristic Impedance shall be 100 Ohms ± 15 Ohms.

E. Technical Data Electrical:

Freq. MHz	SRL db	RL db	Atten.\100 m Max db	PS-NEXT Min db	NEXT Min db	ACR Min db	PS-ACR Min db
1	23	19	2.0	72.3	74.3	72.3	70.4
4	23	21	3.8	63.2	65.2	61.4	59.4
10	23	23	6.0	57.3	59.3	53.3	51.3
16	23	23	7.6	54.2	56.2	48.6	46.6
20	23	23	8.5	52.7	54.7	46.2	44.2
31.25	22	22	10.7	49.8	51.8	41.1	39.1
62.5	21	20	15.5	45.3	47.3	31.8	30.0
100	20	18	19.9	42.3	44.3	24.4	22.9
155	19	17	25.3	39.4	41.4	16.1	15.3
200	18	16	29.2	37.7	39.7	10.5	10.3
250	18	15	33.0	36.3	38.3	5.3	3.3
350	17	14	40.0	34.1	36.1	---	---
500	16	13	49.2	31.8	33.6	---	---

Freq. MHz	ELFEXT Min db	PS-ELFEXT Min db	LCL Min db	LCTL Max db
1	67.8	65.8	50	40
4	55.7	53.7	50	40
10	47.8	45.8	50	40
16	43.7	41.7	48	38
20	41.7	39.7	47	37
31.25	37.9	35.9	45	35
62.5	31.8	29.8	42	32
100	27.8	25.8	40	30
155	23.9	21.9	---	---
200	21.7	19.7	---	---

250	19.8	17.8	---	---
350	---	---	---	---
500	---	---	---	---

F. Category 6 Cable shall be Berk-Tek # LANmark 1000 series, or equal.

2.2 CATEGORY 6 OUTSIDE PLANT CABLE, UTP:

A. Outside plant Category 6 cable shall be designed and constructed for installation in outside underground conduits and shall meet the transmission requirements for TIA/EIA 568-A, Category 6, Horizontal Cables.

B. Cable construction shall utilize a U/V-resistant Polyethylene jacket with water blocking flooded core.

C. Category 6 Outside Plant Cable shall have the following characteristics:

Freq. MHz	Atten.\100m Db avg	Atten.\100m Db max	NEXT dB min	NEXT dB min	NEXT dB min	AC dB min	AC dB min	AC dB min	AC dB min
.772	1.6	1.8	77.0	75.2	75.0	73.2	-	-	-
1.0	1.8	2.0	75.3	73.3	73.3	71.3	70.0	68.0	20.0
4.0	3.5	3.8	66.3	62.5	64.3	60.5	58.0	56.0	23.6
8.0	5.0	5.3	61.8	56.5	59.8	54.5	51.9	49.9	25.4
10.0	5.6	5.9	60.3	54.4	58.3	52.4	50.0	48.0	26.0
16.0	7.1	7.5	57.2	49.7	55.2	47.7	45.9	43.9	26.0
20.0	7.9	8.4	55.8	47.4	53.8	45.4	44.0	42.0	26.0
25.0	8.9	9.4	54.3	44.9	52.3	42.9	42.0	40.0	25.5
31.25	10.0	10.6	52.9	42.3	50.9	40.3	40.1	38.1	25.0
62.5	14.4	15.3	48.4	33.1	46.4	31.1	34.1	32.1	23.5
100	18.5	19.7	45.3	25.6	43.3	23.6	30.0	28.0	22.5
155	23.5	25.0	42.4	17.4	40.4	15.4	26.2	24.2	21.6
200	27.2	28.8	40.8	12.0	38.8	10.0	24.0	22.0	21.0
250	30.7	32.6	39.3	6.7	37.3	4.7	22.0	20.0	20.5
300	34.0	36.2	38.1	2.0	36.1	0.0	20.5	18.5	20.1
350	37.2	39.5	37.1	-	35.1	-	19.1	17.1	19.8
400	40.2	42.7	36.3	-	34.3	-	-	-	19.5
500	45.8	48.6	34.8	-	32.8	-	-	-	19.0
550	48.4	51.5	34.2	-	32.2	-	-	-	18.8

D. Outside Plant Category 6 Cable shall be Mohawk/CDT Outdoor #M57622, or equal.

2.3 CATEGORY 6 PATCH PANELS:

A. Shall be rack mounted with 48 front accessible RJ45 jack ports.

B. Patch Panel shall be constructed using individual Jacks inserted into a pre-punched panel.

C. Jacks shall meet the requirements of proposed EIA/TIA Category 6 Standard dated 4-9-99 or later.

D. The Jack Termination of a 4 pair, 24 AWG, 100 Ohm, Solid Unshielded Twisted Pair cable shall be accomplished by use of a forward motion cap and shall not require the use of a Punch Down tool.

E. Shall use the **568-A** wiring scheme.

F. Shall have characteristics compatible with the Category 6 Patch Cords and Category 6 Cable (specified elsewhere) to ensure the specified Channel Link performance can be met.

G. Jack shall also have following additional characteristics (when measured according to proposed Addendum 5 to ANSI/TIA/EIA 568-A dated 8-25-98):

Typical Performance Results in db:

Performance test:	20 MHz	62.5 MHz	100 MHz	200 MHz
NEXT:	>65.0	>58.1	>54.0	>38.0
PS NEXT:	>64.0	>54.1	>50.0	>44.0
FEXT:	>57.1	>47.2	>43.1	>37.1
PS FEXT:	>54.1	>44.2	>40.1	>34.1
ATTENUATION:	<0.10	<0.16	<0.20	<0.28
RETURN LOSS:	>30.0	>26.0	>22.0	>16.0

H. Shall have rear mounted wire management bar to allow securing to provide strain relief and assist in maintaining proper bend radius.

I. Shall have space for specified jack/cable labeling scheme.

J. Panel height not to exceed 3.5 inches.

K. Bix type Patch Panels are not acceptable.

L. Patch Panel shall be Panduit #CPP48WBL with 48 Panduit #CJ688TPOR Jacks installed.

2.4 DATA JACKS

A. Data jacks shall meet the requirements of proposed EIA/TIA Category 6 Standard dated 4-9-99 or latest revision.

B. The Jack Termination of a 4-pair, 24 AWG, 100 Ohm, Solid Unshielded Twisted Pair cable shall be accomplished by use of a forward motion cap and shall not require the use of a Punch Down tool.

C. Shall use the 568-A wiring scheme.

D. Shall have characteristics compatible with the Category 6 Patch Panels (Section 16700-2.03), Category 6 Patch Cords (Section 16700-2.07), and Category 6 Cable (Section 16700-2.01 & 2.02) to ensure the specified Channel Link performance can be met.

E. Jack shall also have following additional characteristics (when measured according to proposed Addendum 5 to ANSI/TIA/EIA 568-A dated 8-25-98 or latest revision):

Typical Performance Results in db:

Performance test:	20 MHz	62.5 MHz	100 MHz	200 MHz
NEXT:	>65.0	>58.1	>54.0	>38.0
PS NEXT:	>64.0	>54.1	>50.0	>44.0
FEXT:	>57.1	>47.2	>43.1	>37.1
PS FEXT:	>54.1	>44.2	>40.1	>34.1
ATTENUATION:	<0.10	<0.16	<0.20	<0.28
RETURN LOSS:	>30.0	>26.0	>22.0	>16.0

G. Jacks for 5400 Wiremold Raceway shall be Panduit Keystone #KJ688TPOR.

H. Jacks shall be Panduit #CJ688TPOR.

2.5 DATA JACK PLATES/HOUSINGS/ENCLOSURES

A. Data Jack Plates and Housings shall be appropriate for jack type and the location where they are to be used.

B. Data Jack Plate and Housings shall be labeled using a numbering schedule specified by the District.

C. See Part 3, Execution, for additional information.

D. Data Jack Wall Plates shall be Panduit #ECPG with Panduit #CFG4 frame, and 3 Panduit #CHB2IW-X blank insert.

E. Data Jack Plates 5400 Wiremold Raceway shall be Wiremold #5507FRJ.

2.6 FIBER OPTIC CABLE:

A. Fiber Optic Cable shall:
1. Be a composite cable containing both multimode and single mode fibers.
2. Be rated for indoor/outdoor use in both vertical and horizontal applications.
3. Meet the requirements of NEC for OFNR cables.
4. Comply with Bellcore, FDDI, EIA/TIA-568, and Insulated Cable Engineers Association (ICEA) standards.

5. Be constructed using a water blocking technology to inhibit water from affecting the fibers.
6. Be reinforced with Aramid yarn and also meet the following additional criteria:
   a. Physical specifications:

Multi-mode:	Single-mode:
50.0 nanometer core	8.3 nanometer core
125 nanometer cladding	125 nanometer cladding
250 nanometer coating	250 nanometer coating
900 nanometer buffering	900 nanometer buffering
0.275 numeric aperture	0.13 numeric
aperture Graded Index	

7. Fiber Count:
   a. Multi-mode: 12 Fibers
   b. Single-mode:12 Fibers

8. Maximum Tensile Load During Installation: 1600 N
9. Maximum Tensile Load Operating: 525 N
10. Cable minimum bending radius:
    a. During installation: 20 times the cable diameter
    b. After installation: 10 times the cable diameter

11. Buffered Fiber minimum bend radius: 0.75 inches
12. Operating temperature: -40 to +85 degrees C
13. Wavelength/attenuation:

	Multi-mode:		Single-mode:	
	850 nm	1300 nm	1300 nm	1550 nm
Attenuation	3.0 db/km	1.0 db/km	.5 db/km	.5 db/km
Bandwidth MHz/km Nominal	400 MHz/km	600		
Zero dispersion Slope	0.092 ps/(nm2-km)			

B. The following Documents of the latest issue form a part of this specification to the extent specified herein:

ANSI/TIA/EIA-STD-RS-455: Standard Test Procedures for Fiber Optic Fibers, Cables Transducers, Connecting and Terminating Devices.
ANSI/TIA/EIA-STD-RS-359: Standard Colors for Color Identification and Coding. ANSI/TIA/EIA-STD-598A: Optical Fiber Cable Color Coding.
MIL-STD-202: Test Methods for Electronic and Electrical Equipment.
MIL-HDBK-454: Standard General Requirements for Electronic Equipment.
MIL-STD-810: Environmental Test Methods and Engineering Guidelines.
UL Subject 1666: Standard Flame Test for Flame Propagation Height of Electrical and Optical Cable Installed Vertically

in Shafts.

CEC-2019: California Electric Code Article 770, Optical Fiber Cable.

C. Fiber Optic Cable shall be Optical Cable Corporation Part #DC24-060D-4W3FB/1GC-4S.5MC/00.5MD/900-OFNR.

2.7 PATCH CORDS (MDF/IDF CABINETS):

A. Fiber Optic MDF/IDF Patch Cords:
1. Shall be factory constructed and have the same Optical Characteristics and Bandwidth as the Fiber Optic Cables specified in Section 2.06 Fiber Optic Cable.
2. Single-mode patch cord for Single-mode cable.
3. Mode-conditioning patch cord for Multi-mode cable.
4. Connector types to match installed equipment.
5. Length shall be no longer than necessary to connect the installed equipment.
6. Connectors shall be factory installed.
7. A “Duplexed” connector is required.

B. Category 6 MDF/IDF Patch Cords:
1. Shall be factory constructed using materials that are compatible with the proposed Category 6 Standard dated 4-9-98 or latest version.
2. Shall have characteristics that complement the specified Patch Panel Jacks (Section 16700-2.03) to ensure the specified Channel Link performance is met.
3. Length shall be no longer than necessary to accommodate the physical layout of the equipment to be connected.
4. Cords are to be bound together by Velcro bands. Wire ties are not acceptable.
5. Contractor to supply and install.
6. Patch Cords shall be Panduit #UTPCG series, or equal, Orange.

2.8 FIBER OPTIC PATCH PANELS:

A. Type-1 (for use in IDF Wiring Cabinets) shall be:
1. Capable of containing twenty-four (24) SC type duplex fiber optic adapters.
2. Equipped with six (6) SC type duplex fiber optic adapters.
3. Designed for 19" rack mounting.
4. Rear Tray with Slack Management Spools.
5. Equipped with integral cable strain relief bar.
6. Height: 1.75" max.

B. Type 1 Patch Panel shall be Panduit Patch Panel Frame #CPP24WBL with FMT1 Opticom Tray and # CMDBUSCZBU SC adapters installed.

C. Type-2 (for use in MDF Wiring Cabinets) shall be:
1. 19-inch rack mount type with a mechanism to permit entry for servicing regardless of other equipment mounted above or below.
2. Have front and rear access.
3. Be equipped with a clamp type mount to secure incoming cable.
4. Be equipped with SC type connectors meeting TIA/EIA specifications.

5. Contain internal spacers and guide rings to store and route the buffered fibers.
6. Be four rack units in height, 7 inches.
7. Have depth: 14 inches, maximum.
8. Have physical characteristics to accommodate the layout and labeling scheme shown in the drawings.
9. Be equipped with 72 SC connectors as shown in the plans.

D. Type-2 Fiber Optic Patch Panel shall be Avaya #LSTLS/MM/SC-072/7.

2.9 CATEGORY 6 STATION JUMPER CORDS:

A. One Category 6 Station Jumper Cords shall be provided for each Category 6 Jack installed.

B. This cable will be used to connect a computer to the jack.

C. Shall be factory constructed using materials that are compatible with the proposed Category 6 Standard dated 4-9-98 or latest version.

D. Shall have characteristics that complement the specified Data Jacks (Section 2.04 Data Jacks) to ensure the specified Channel Link performance is met.

E. Shall be length 14 feet.

F. Station cords shall be boxed and labeled for delivered to the Maintenance Department.

G. Each box of station cords shall be labeled with site/project name and number of total cables.

H. Patch Cables shall be Panduit #UTPCG series, or equal.

2.11 "J" HOOKS

A. Shall be Category 5 type, with an "S" hook attached to provide a "swivel" action, Caddy type or equal.

B. Bridal ("D") Rings and similar devices are not acceptable.

2.12 INNER DUCT

A. The inner duct shall be an extruded, corrugated wall, coilable tubing suitable for installation within an existing larger diameter conduit system and meet the following additional criteria:
   1. Manufactured of Polyethylene with a density of .944 gm/cc.
   2. One-inch diameter.
   3. Orange in color.
   4. Tensile strength: 500 pounds.
   5. Impact Resistance at 32 degrees F, 50 ft. pounds.

B. Couplings shall threaded metallic type.

C. Shall have factory-installed pull-rope.

2.14 WIRING CABINET TYPE 1

A. Suitable for mounting 19" rack mount type equipment.

B. Rack rails shall be adjustable, front to rear.

C. Wiring Cabinet shall have double swing design to allow rear access to the equipment.

D. Door shall be field changeable to permit left or right hand mounting to accommodate field conditions.

E. Wiring Cabinet shall have solid metal front door with keyed lock.

F. Type 1 Wiring Cabinet shall be equipped with forced air ventilation with finger guards (x2) for each side (vent fan).

G. A double duplex power outlet shall be installed in one corner of the wiring cabinet that is on the swing side of the door.

H. The double duplex power outlet shall be installed with an isolated 20-amp circuit.

I. Wiring Cabinet shall have appropriate mounting screws included for internal equipment rails (quantity not less than 30 pieces).

J. Type 1 Wiring Cabinet shall be equipped with rack-mount 20-amp, surge protected, standard plug, multi-outlet power strip (Section 16700-2.20).

K. Wiring Cabinet shall be properly grounded with suitable earth grounding.

L. Color: black.

M. Construction: Carbon steel, all welded construction.

N. Size: 24" high x 22" wide x 26" deep.

O. Wiring Cabinet Type 1 shall be Hoffman DataCom #EWMF242225 with A4AXFNPG fan, AGARD4 finger guards (x2) and A19P20A10 power strip.

2.15 WIRING CABINET TYPE 2:

A. Suitable for mounting 19" rack mount type equipment.

B. Rack rails shall be adjustable, front to rear.

C. Wiring Cabinet shall have double swing design to allow rear access to the equipment.

D. Door shall be field changeable to permit left or right hand mounting to accommodate field conditions.

E. Wiring Cabinet shall have solid metal front door with keyed lock.

F. Type 2 Wiring Cabinet shall be equipped with forced air ventilation with finger guards (x2) for each side (vent fan).

G. A double duplex power outlet shall be installed in one corner of the wiring cabinet that is on the swing side of the door.

H. The double duplex power outlet shall be installed with an isolated 20-amp circuit.

I. Wiring Cabinet shall have appropriate mounting screws included for internal equipment rails (quantity not less than 30 pieces).

J. Type 2 Wiring Cabinet shall be equipped with rack-mount 20-amp, surge protected, standard plug, multi-outlet power strip (Section 16700-2.20).

K. Wiring Cabinet shall be properly grounded with suitable earth grounding.

L. Color: black.

M. Construction: Carbon steel, all welded construction.

N. Size: 36" high x 22" wide x 25" deep.

O. Wiring Cabinet Type 2, shall be Hoffman DataCom #EWMF362225 with A4AXFNPG fan, AGARD4 finger guards (x2) and A19P20A10 power strip.

2.16 WIRING CABINET TYPE 3

A. Wiring Cabinets (WC) shall be modular construction, for standard EIA 19" equipment mounting.

B. External covers and doors to be fabricated of 14 gauge steel.

C. Door shall be solid metal and have flush mounted key locked handle and three point latch mechanism.

D. Cabinet shall be totally enclosed with a solid top and base assembly.

E. Seamless foam-in-place gaskets shall be used to provide a watertight and dust-tight seal against moisture and contaminants.

F. Door shall be field changeable to permit left or right hand mounting to accommodate field conditions.

G. When installed in environments that have sufficient room cooling units (air conditioning), cabinets shall have forced air ventilation (vent fan).

H. When installed in environments that do not have sufficient room cooling units (air conditioning), cabinets shall have mounted air conditioning units installed.

I. A double duplex power outlet shall be installed in one corner of the wiring cabinet that is on the swing side of the door.

J. The double duplex power outlet shall be installed with an isolated 20-amp circuit.

K. Type 3 Wiring Cabinet shall be equipped with rack-mount 20-amp, surge protected, standard plug, multi-outlet power strip (Section 16700-2.20).

L. Shall be properly grounded with suitable earth grounding.

M. Wiring Cabinet shall have appropriate mounting screws included for internal equipment rails (quantity not less than 30 pieces).

N. Shall be equipped with an internal equipment-mounting frame designed to swing-out and allow access to rear of installed equipment.

O. Internal frame shall be adjustable, front to rear.

P. Internal frame shall be able to swing outward for easy access to rear of equipment.

Q. Shall accommodate equipment depth of 24" min.

R. A vertically mounted, 5-foot-long, 20 amp, surge protected, standard plug, multi-outlet power strip shall be installed on the swing out mounting frame.

S. Dimensions:

1. Height: 2200 mm
2. Depth: 600 mm
3. Width: 800 mm

T. Wiring Cabinet, Type 3, shall be Hoffman PRO-LINE Series, with required attachments.

2.17 OPEN FRAME EQUIPMENT RACKS

A. Open Frame Floor Mounted Equipment Racks:
1. Open frame racks are not allowed in areas where students or site personal have access.
2. Racks shall be open frame design for mounting 19" electronic equipment.
3. A vertical rack cabling section shall be installed between each adjacent rack.
4. Racks shall have a vertical cabling section installed on both sides.
5. Shall have horizontal cable management secured to top of rack and nearest wall.
6. Contractor shall verify dimensions of Equipment Room before ordering racks.
7. A vertically mounted, 5-foot-long, 20 amp, surge protected, standard plug, multi-outlet power strip shall be installed on each rack.
8. Shall be properly grounded with suitable earth grounding.
9. Vertical rack cabling sections shall be Chatsworth #11374-02.

10. Floor Mounted Racks for Equipment Rooms shall be Chatsworth Products #55053-503, with Chatsworth Vertical Power Strip #12851-706, earth grounding kit (13622-010), cable ladder kit (11252-115) and cable management kit (40098-705).

B. Open Frame Wall Mounted Equipment Racks:
1. Open frame racks are not allowed in areas where students or site personal have access.
2. Racks shall be open frame design for mounting 19" electronic equipment.
3. Contractor shall verify dimensions of Equipment Room before ordering racks.
4. A rack-mount, 20 amp, surge protected, standard plug, multi-outlet power strip shall be installed on each rack.
5. Shall be properly grounded with suitable earth grounding.
6. Wall Mounted Racks for Equipment Rooms shall be Chatsworth Products #15323-524, with a Hoffman DataCom A19P20A10 power strip.

2.18 POWER STRIP

A. 19" rack mount.

B. 12 outlets, rear mounted.

C. 20 amp rated.

D. Surge protected.

E. Standard plug.

F. Power Strip shall be Hoffman #A-19P20A10 or equal:

2.19 FIBER OPTIC CONNECTORS

A. Connectors shall be attached to fiber strands using a “crimp-on” connector.

B. Connectors shall be SC type.

C. Connectors shall be Siecor #95-200-41 (single-mode) and 95-000-40 (multi- mode).

2.20 JUNCTION BOXES

A. Junction Boxes shall be defined as metal boxes that are at least than 12”L x12”W x 6”D.

B. In all instances the box shall be sized according to the needs of the installed cable, with bend radius of the cable a main consideration.

C. Junction boxes shall be installed as necessary to facilitate the pulling of wire and to comply with NEC requirements.

D. 12”L x 12”W x 6”D Junction Box as the minimum size and is not acceptable for use with conduit sizes greater than 1 ¼ inches.

E. Refer to National Electrical Code #370-28 for Junction Box requirements for 2 inch, and other size conduits.

F. Junction Box size and hole placement are defined in NEC #370-28.

G. An 18”H X 18”W X 8”D, NEMA 3, Junction Box should serve most locations, including those where a T.V. System Outdoor Directional coupler will be housed.

H. The bend radius of a “bundle” of Category 6 cables and RG-11 cables and in some instances .540-inch rigid coaxial cable shall be considered in selecting the box depth.

I. In no case shall the depth be less than 6 inches.

J. An 8 inch depth for “all” boxes is recommended.

K. In some locations, to accommodate special needs, a special box size may be required.

2.21 PULL BOXES

A. Pull Boxes shall be defined as precast cement boxes that are less than 8’-6”L x 60”W x 48”D.

B. Precast concrete Pull Boxes shall be minimum inside dimension of: 16” wide by 29” long by 21” deep.

C. Each Pull Box shall be equipped with an “extension” to provide the required minimum depth of 21 inches.

D. In areas of no vehicular traffic Pull Boxes shall be Christy #N35 with #N36T bolt-down lid.

E. In areas of light vehicular traffic, Pull Box shall be Christy #B1730 rated for H/20 loading.

F. Pull Box shall be equipped with B36SL slab, B1730-51JH cover.

G. Pull Box Extinctions shall be used as required by depth to level cover to finish grade.

H. Pull Box shall rest on a 6” bed of crushed gravel.

I. Pull Boxes shall have minimum 2” diameter drain hole.

J. Pull Box Covers shall be permanently engraved as “DATA”.

PART 3 - EXECUTION

3.1 TYPE 3 WIRING CABINETS

A. For MDF Use:
1. Type 3 Wiring Cabinet will function as the MDF (Main Distribution Frame).
2. MDF Wiring Cabinet will serve as the connection point for IDF Wiring Cabinets.
3. To permit connection of the system installed to the District's Wide Area Network (WAN), a duplex jack shall be provided at the WAN location and connected to the MDF Wiring Cabinet utilizing Category 6 on specified patch panel.
4. Dependent on site conditions, MDF Wiring Cabinet shall have HVAC or forced air vented system installed.
5. A double duplex power outlet shall be installed in one corner of the wiring cabinet that is on the swing side of the door.
6. The double duplex power outlet shall be installed with an isolated 20 amp circuit.
7. Wiring Cabinet shall have rack mounted power strips installed.
8. MDF Wiring Cabinets shall be earth grounded.
9. All Category 6/Fiber Optic cable dressing shall be done with Velcro strips.
10. Tie wraps are not allowed when dressing Category 6/Fiber Optic cable.
11. All patch cable dressing shall be done with Velcro strips.
12. Tie wraps are not allowed when dressing patch cables.
13. The District prefers that the MDF Wiring Cabinet be installed in the Administrative Area.
14. If no space is available in this area, then the cabinet shall be located in a suitable area near the Administration Area.
15. Administrative area or other suitable area shall have adequate space and environmental controls (HVAC cooling units).
16. Area selected shall be secure with a lockable passageway.
17. Arrangement of equipment in MDF is shown in Drawing E1.03.

B. For IDF Use:
1. The District prefers that the Type 3 Wiring Cabinet be installed for use as an IDF cabinet.
2. Type 3 Wiring Cabinets may be used in areas that have adequate space and environmental controls (HVAC cooling units).
3. Area selected shall be secure with a lockable passageway.
4. Dependent on site conditions, IDF Wiring Cabinet shall have HVAC or forced air vented system installed.
5. A double duplex power outlet shall be installed in one corner of the wiring cabinet that is on the swing side of the door.
6. The double duplex power outlet shall be installed with an isolated 20 amp circuit.
7. IDF Wiring Cabinets shall be equipped with rack-mount 20 amp, surge protected, standard plug, multi-outlet power strip (Section 16700-2.20).
8. IDF Wiring Cabinets shall be earth grounded.
9. All Category 6/Fiber Optic cable dressing shall be done with Velcro strips.
10. Tie wraps are not allowed when dressing Category 6/Fiber Optic cable.
11. All patch cable dressing shall be done with Velcro strips.
12. Tie wraps are not allowed when dressing patch cables.
13. The IDF cabinets will contain the Switches and Patch Panels, which connect to Jacks in various locations.
14. The IDF shall be located within 90 meters of all Jacks served by the IDF.
15. All IDF locations shall be at least 100 meters from MDF location.
16. All IDF areas shall be connected to MDF by fiber cables as specified in Section

16700.

17. IDF and MDF locations are not to be combined.
18. Arrangement of equipment in the IDF is shown in Drawing E1.03.

3.2 TYPE 2 WIRING CABINETS

A. For MDF Use:
1. The District prefers that the Type 3 Wiring Cabinet be installed for use as an MDF cabinet.
2. Type 2 Wiring Cabinets may be used for MDF locations only where Type 3 Wiring Cabinets are found to be inappropriate for reasons of space.
3. MDF Wiring Cabinet will serve as the connection point for IDF Wiring Cabinets.
4. To permit connection of the system installed to the District's Wide Area Network (WAN) a duplex jack shall be provided at the WAN location and connected to the MDF Wiring Cabinet utilizing Category 6 on specified patch panel.
5. MDF Wiring Cabinet shall have forced air vented system (fans) installed.
6. A double duplex power outlet shall be installed in one corner of the wiring cabinet that is on the swing side of the door.
7. The double duplex power outlet shall be installed with an isolated 20 amp circuit.
8. MDF Wiring Cabinet shall be equipped with rack-mount 20 amp, surge protected, standard plug, multi-outlet power strip (Section 16700-2.20).
9. MDF Wiring Cabinets shall be earth grounded.
10. All Category 6/Fiber Optic cable dressing shall be done with Velcro strips.
11. Tie wraps are not allowed when dressing Category 6/Fiber Optic cable.
12. All patch cable dressing shall be done with Velcro strips.
13. Tie wraps are not allowed when dressing patch cables.
14. The District prefers that the MDF Wiring Cabinet be installed in the Administrative Area.
15. If no space is available in this area, then the cabinet shall be located in a suitable area near the Administration Area.
16. Administrative area or other suitable area shall have adequate space and environmental controls (HVAC cooling units).
17. Area selected shall be secure with a lockable passageway.
18. Arrangement of equipment in MDF is shown in Drawing E1.03.

B. For IDF Use:
1. The District prefers that the Type 3 Wiring Cabinet be installed for use as an IDF cabinet.
2. Type 2 Wiring Cabinets may where space concerns do not allow Type 3 Wiring Cabinets.
3. Type 2 Wiring Cabinets must be installed in areas that have adequate space and environmental controls (HVAC cooling units).
4. Area selected shall be secure with a lockable passageway.
5. IDF Wiring Cabinets shall have forced air vented system (fans) installed.
6. A double duplex power outlet shall be installed in one corner of the wiring cabinet that is on the swing side of the door.
7. The double duplex power outlet shall be installed with an isolated 20 amp circuit.
8. IDF Wiring Cabinet shall be equipped with rack-mount 20 amp, surge protected, standard plug, multi-outlet power strip (Section 16700-2.20).
9. IDF Wiring Cabinets shall be earth grounded.
10. All Category 6, Fiber Optic, and Patch Cable dressing shall be done with Velcro strips.
11. Tie wraps are not allowed when dressing cables.
12. The IDF cabinets will contain the Switches and Patch Panels, which connect to

Jacks in various locations.

13. The IDF shall be located within 90 meters of all Jacks served by the IDF.
14. All IDF locations shall be at least 100 meters from MDF location.
15. All IDF areas shall be connected to MDF by fiber cables as specified in Section 16700-2.20.
16. IDF and MDF locations are not to be combined.
17. Arrangement of equipment in the IDF is shown in Drawing E1.03.

3.3 EQUIPMENT RACKS

A. For MDF Use:

1. Equipment Racks are allowed for MDF use ONLY when Wiring Cabinets Type 2 and Type 3 are not suitable for environmental reasons.
2. Equipment Racks are only allowed in areas that are securable.
3. Equipment Racks are NOT allowed in areas where personal or students have access.
4. MDF Equipment Rack will serve as the connection point for IDF Wiring Cabinets.
5. To permit connection of the system installed to the District's Wide Area Network (WAN) a duplex jack shall be provided at the WAN location and connected to the MDF Equipment Rack utilizing Category 6 on specified patch panel.
6. MDF Equipment Rack shall have rack mounted power strips installed.
7. MDF Equipment Rack shall be earth grounded.
8. All Category 6/Fiber Optic cable dressing shall be done with Velcro strips.
9. Tie wraps are not allowed when dressing Category 6/Fiber Optic cable.
10. All patch cable dressing shall be done with Velcro strips.
11. Tie wraps are not allowed when dressing patch cables.
12. The District prefers that the MDF Equipment Rack be installed in the Administrative Area.
13. If no space is available in this area, then the Equipment Rack shall be located in a suitable area near the Administration Area.
14. Administrative area or other suitable area shall have adequate space and environmental controls (HVAC cooling units).
15. Area selected shall be secure with a lockable passageway.
16. Arrangement of equipment in MDF is shown in Drawing E1.03.

B. For IDF Use:

1. Equipment Racks are allowed for IDF use ONLY when Wiring Cabinets Type 2 and Type 3 are not suitable for environmental reasons.
2. Equipment Racks are ONLY allowed in areas that are securable.
3. Equipment Racks are NOT allowed in areas where personal or students have access.
4. Equipment Racks must be installed in areas that have adequate space and environmental controls (H.V.A.C. cooling units).
5. Area selected shall be secure with a lockable passageway.
6. IDF Equipment Racks shall have rack mounted power strips installed.
7. IDF Equipment Racks shall be earth grounded.
8. All Category 6/Fiber Optic cable dressing shall be done with Velcro strips.
9. Tie wraps are not allowed when dressing Category 6/Fiber Optic cable.
10. All patch cable dressing shall be done with Velcro strips.
11. Tie wraps are not allowed when dressing patch cabling.

12. The IDF Equipment Racks will contain the Switches and Patch Panels, which connect to Jacks in various locations.
13. The IDF shall be located within 90 meters of all Jacks served by the IDF.
14. All IDF locations shall be at least 100 meters from MDF location.
15. All IDF areas shall be connected to MDF by fiber cables as specified in Section 16700.
16. IDF and MDF locations are not to be combined.
17. Arrangement of equipment in the IDF is shown in Drawing E1.03.

3.4 CATEGORY 6 CABLE

A. All Category 6 cable installation shall be in accordance with manufacturer's recommendations. Recommendations of the referenced TIA/EIA standard, and the following:
1. All cable shall be hand pulled and formed.
2. Provide rigging to allow cable to feed from spools without twists.
3. Pulling tension shall not exceed 25 pounds.
4. Cable runs shall be installed in continuous lengths, without splice.
5. Minimum cable bending radius shall not be less than four times the cable diameter or less than the manufacturer's recommendation, both during cable pulling and in the final installation.
6. Individual and group cable runs in accessible ceiling spaces shall be open cable runs supported by "J Hooks" attached to the building structure.
7. Cable support spacing shall not be greater than 5 feet.
8. Cables shall not be pulled tight, but shall exhibit "a noticeable" sag.
9. Cable routing shall be positioned to minimize obstruction to others using or accessing the Space and to minimize the potential for damage from other building construction or maintenance operations.
10. Where possible, cables shall be routed by grouping into a bundle and branching to the final locations with right angle bends.
11. Cables crossing pipes, ducts, etc., where possible, shall be run above such obstructions.
12. Bundled cables shall be tie wrapped to prevent undue sagging between cable support devices.
13. Tie wraps shall be manually tightened, without tools, to avoid deforming the cable.
14. Cables shall not rest upon "T" bar ceiling or be supported from existing ceiling, fixtures, or air terminal support wires.
15. Provide a 6 to 10 inch length of cable at each jack location to accommodate future servicing of the jack.
16. All cable in exposed areas shall be installed in raceway systems per Specification Section 16010, or as shown on drawings.
17. Cable routed via concealed, non-accessible spaces shall be installed in raceway per Specification Section 16010, or as shown on the drawings.
18. Maintain cable spacing from sources of electromagnetic interference in accordance with TIA/EIA-569.
19. Observe manufacturer's recommendations for cable stripping and maintenance of pair twists at terminations.
20. Maintain cable jacket to within .5 inch of the point of termination.
21. Cables in Classroom, Offices, etc., shall be installed within wall spaces where

possible.

22. Drill through blocking if necessary, and fill with appropriate fire stop.
23. Cables shall not be pulled through "J-Hooks", but shall be pulled using low friction devices such as pulleys or other equipment, then laid into the "J-Hooks."

3.5 PATCH PANELS, CATEGORY 6

A. All Category 6 Patch Panels shall be installed as follows:
1. Install patch panels at locations in Wiring Cabinets as indicated.
2. Cables shall be secured with tie wraps at patch panel cable management support bar to stabilize cable and ensure proper maintenance of bend radius.
3. Provide engraved identification plate to identify each patch panel. Example: PATCH PANEL "A ", PATCH PANEL "B", etc.
4. Each patch panel port shall be labeled with the jack number and room number that it serves.
5. The label on the attached port cable shall provide the information for the port label.
   a. Port label shall consist of the first six digits of the Cable Label.
   b. A two-line label is required, with the jack number appearing above the room number.
   c. The lettering color shall contrast with the label background color.
   d. The label shall be machine printed on a "self-laminating", adhesive material.
   e. The label shall be applied in the space provided on the patch panel and then covered with a clear plastic strip.
6. Contractor shall demonstrate a clear understanding of the labeling concept before proceeding with label application.
7. Contractor shall submit a sample of the proposed label for written approval by the District.
8. Install an Ortronics #40600369 strain relief bar at each patch panel location.

3.6 INNER DUCT

A. Inner duct for fiber optic cable shall be installed in a continuous run between point of origin and destination.

B. Approved couplings may be used in pull boxes.

C. Shall be used in all underground conduits sized 4 inches or larger shall be used for all open air Fiber Optic Cable runs.

D. Shall be secured at origin and terminal points and points in between to prevent movement.

E. Inner duct placement in underground conduits shall be grouped for maximum conduit fill leaving as many conduits as possible empty for future use.

F. All unused Inner duct shall have appropriate water tight plug material to seal duct.

G. Inner duct shall be trained and routed around the perimeter of pull boxes leaving

maximum space for future cabling.

H. Label each Inner duct at point of origin point of termination, and at all points where it passes through a pull box.

I. Numbering scheme shall be “A”, “B”, “C”, etc.

3.7 FIBER OPTIC CABLE INSTALLATION

A. Fiber optic cable shall be installed only after complete raceway system and inner duct has been installed.

B. Pulling of fiber optic cable shall be done only in the presence of the District Inspector or Project Manager.

C. Any observed bending of any fiber optic cable during the installation process which exceeds the manufacturer’s recommended bending radius shall be cause for complete replacement of that cable at the Contractor’s expense.

D. Such bending can cause micro-cracks, which are undetectable with normal testing and which can cause performance problems in later years.

E. Fiber optic cable runs shall be installed in a continuous length; no splice allowed.

F. Provide necessary rigging to allow cable to feed from reels without twisting and provide a smooth bending transition of cable outside the raceway.

G. Pulling tension shall be monitored and not exceed the manufacturer’s recommendations.

H. Use a calibrated breakaway swivel pulling connector to prevent over stressing the cable when pulling.

I. Use a split mesh cable grip for attachment of pulling ropes or cables.

J. Minimum cable bending radius shall not be less than 20 times the cable diameter during pulling installation and not less than 10 times the cable diameter after installation.

K. All fiber optic cabling installed underground and within buildings shall be installed in an approved raceway.

L. Except in accessible attic spaces, fiber optic cable may be run “open” in “J Hooks” or other approved support system.

M. All fiber optic cabling installed in accessible attic spaces shall be installed in Inner-Duct.

N. Provide a 36-inch length of buffered fiber at each fiber patch panel or storage tray.

O. Individual buffered fibers shall be grouped in pairs and labeled.

P. The fiber pair shall be considered as a single port cable (much the same as a 4-pair, Category 6 cable which is considered a single port cable).

Q. SC connectors shall be installed on the fiber pair.

R. A separate duplexing clip shall be applied to join the SC connectors as a duplexed pair.

S. SC connector shall be attached to the fiber using Crimp type connectors.

T. Each strand of fiber within the cable shall be tagged and tested, with the District appointed Observer present, using an Optical Time Domain Reflectometer (OTDR).

U. Submit test results to District appointed Observer for review and approval before installation.

V. Any cable not meeting manufacturer's specifications shall not be installed.

W. Following installation and termination of the cable, conduct the following tests, using an approved Optical Power Meter:
1. Measure end-to-end attenuation at 850 and 1300 nm for Multimode fiber and at 1300 and 1550 nm for Single-mode fiber.
2. Measurement must be made from each end of the cable.
3. Any cable or termination, which shows signs of deterioration or failure to meet manufacturer's specification, shall be replaced.
4. Measurements shall be made in the presence of a District appointed Observer.

3.8 LABELING AND IDENTIFICATION

A. Category 6 Jacks:
1. Category 6 Jack Numbers shall be developed by the Contractor using the following information and have the generalized format shown below:
a. DVV-WWWW-XX-YZZ
b. Where:

DVV =	Jack number (starting with the letter "D") unique to the room in which it is located (e.g., D01, D02, D99, etc.).
WWWW =	Room number where Jack is located (e.g., 0001, B024, 124C, LIBR, ADMN, CAFF, POD3, etc.).
XX =	Number of Wiring Cabinet, WC, serving the Jack. (e.g., 01, 03, 09, etc.).
Y =	Cat. 6, Patch Panel designator (e.g., A, B, C, etc.).
ZZ =	Port number on Cat. 6, Patch Panel (e.g., 01, 15, 48, etc.).

2. For example, Jack # X01-013B-02-A37 indicates: Jack X01, in Room 013B, served by Wiring Cabinet (WC) 02, from Patch Panel A, Port 37.
3. Contractor shall submit a sample of the proposed Category 6 Jacks Label for written approval before installation.

C. Category 6 Patch Panels:
1. Category 6 Patch Panels shall be developed by the Contractor using the following information and have the generalized format shown below:

a. D
V
V
W
W
W
W

b. Where:

DVV =	Jack number (starting with the letter "D") unique to the room in which it is located (e.g., D01, D02, D99, etc.).
WWWW =	Room number where Jack is located (e.g., 0001, B024, 124C, LIBR, ADMN, CAFF, POD3, etc.).

2. Refer to diagram E1.05/2 for labeling example.
3. Category 6 Patch Panel Labels shall be machine printed, using a laser printer, on appropriately size vinyl or other approved material.
4. Lettering shall be black and printed on a white frosted surface and covered by a minimum of two wraps of clear protective material.
5. A one-piece label is required.
6. Category 6 Patch Panel Labels shall be computer generated using appropriate software.
7. Contractor shall submit a sample of the proposed Category 6 Patch Panel Labels for written approval before installation.

D. Category 6 Cable:
1. Category 6 Cable Label shall contain the same information as the Jack Label.
2. Category 6 Cable Label information will be developed by the Contractor using rules shown in Section 16700-3.08, A, 1-3.
3. Category 6 Cable Label information shall appear two times on the label to facilitate ease of reading.
4. All Category 6 Cable Labels shall have the same orientation.
5. Category 6 Cable Label shall be machine printed, using a laser printer, on appropriately size vinyl or other approved material.
6. Lettering shall be black and printed on a white frosted surface and covered by a minimum of two wraps of clear protective material.
7. A one-piece label is required.
8. Category 6 Cable Labels shall be placed on each end of the cable, approximately four inches back from the point of termination.
9. Category 6 Cable Labels shall be computer generated using appropriate software.
10. Contractor shall submit a sample of the proposed Category 6 Cable Labels for written approval before installation.

E. Fiber Optic Patch Panel:
1. The Fiber Optic Patch Panel label at Wiring Cabinet WC00 shall be labeled using the following generalized format:
a. WCXX-FXX-WC00-FXYY
b. Where:

WCXX =	Destination Wiring Cabinet number (e.g., WC05).
FXX =	Destination F.O. Patch Panel port number (e.g., F03 = port 03 of fiber patch panel).

WC00 = Source location of F.O. Cable.
FXYY = Source F.O. Patch Panel number and port. (e.g., F124 = port 24 of fiber patch panel 1).

F. Refer to diagram E1.05/1 for labeling example.

G. Fiber Optic Patch Panel Labels shall be machine printed, using a laser printer, on appropriately size vinyl or other approved material.
1. Lettering shall be black and printed on a white frosted surface and covered by a minimum of two wraps of clear protective material.
2. A one-piece label is required.
3. Fiber Optic Patch Panel Labels shall be computer generated using appropriate software.
4. Contractor shall submit a sample of the proposed Fiber Optic Patch Panel Label for written approval before installation.

H. Fiber Optic Cable:
1. Buffered fibers shall be grouped into pairs and labeled.
2. The fiber pair shall be considered as a single port cable (much the same as a 4- pair Category 6 cable is considered a single port cable.).
3. The Fiber Optic Patch Panel labels at Wiring Cabinet WC00 will provide the information for the fiber pair labeling.
4. Fiber Optic Cable Labels shall have the following generalized format:
   a. WCXX-FXX-WC00-FXYY
   b. Where:
      WCXX = Destination Wiring Cabinet number (e.g., WC05).
      FXX = Destination Fiber Optic Patch Panel port number (e.g., F03 = port 03 of patch panel).
      WC00 = Source location of Fiber Optic Cable.
      FXYY = Source Fiber Optic Patch Panel number and port. (e.g., F124 = port 24 of fiber patch panel 1).
5. Fiber Optic Cable Label information shall appear two times on the label to facilitate ease of reading.
6. All Fiber Optic Cable Labels shall have the same orientation.
7. Fiber Optic Cable Labels shall be machine printed, using a laser printer, on appropriately sized Mylar, vinyl or other approved material.
8. Lettering shall be black and printed on a white frosted surface and covered by a minimum of two wraps of clear protective material.
9. A one-piece label is required.
10. Fiber Optic Cable Labels shall be placed on each end of the cable, approximately four inches back from the point of termination.
11. Fiber Optic Cable Labels shall be computer generated using appropriate software.
12. Contractor shall submit a sample of the proposed Fiber Optic Cable Labels for written approval before installation.

I. Wire Cabinet Labeling:
1. Each wire cabinet shall be labeled with unique numbered engraved tags.
2. Contractor is to follow existing labeling scheme for the site.
3. Contractor is to determine what IDF numbers are in current use.

4. The next unused IDF number shall be used for each new IDF installed.
5. Format: IDF #"x" (where "x" is the unique number for that IDF).

G. Data Jack, Plates/Housings/Enclosures:
1. Each Category 6 Jack shall be labeled using information obtained per Section 16700-3.08, A, 1-3.
2. Jack Plate or other jack mounting assembly shall be engraved with the jack numbering information.
3. The engraving shall be filled with a permanent contrasting fill material.
4. "Stick-on" type labels are not acceptable.
5. Contractor shall submit a sample of each type of jack plate or assembly for approval before installation.

3.9 TYPE 1 WIRING CABINET:

A. For Main Video Distribution Head End Cabinet Use:
1. Type 1 Wiring Cabinets shall be installed for use as a Main Video Distribution Head End Cabinet.
2. Main Video Distribution Head End Cabinet will serve as the connection point for video signals feed to individual Sub Video Distribution Cabinets.
3. Main Video Distribution Head End Cabinet shall have forced air vented system (fans) installed.
4. A double duplex power outlet shall be installed in one corner of the wiring cabinet that is on the swing side of the door.
5. The double duplex power outlet shall be installed with an isolated 20 amp circuit.
6. Main Video Distribution Head End Cabinet shall have rack mounted power strips installed.
7. Main Video Distribution Head End Cabinet shall be earth grounded.
8. The District prefers that the Main Video Distribution Head End Cabinet be installed in a central area.
9. If no space is available in this area, then the cabinet shall be located in a suitable area near the central of the site.
10. Arrangement of equipment in Main Video Distribution Head End Cabinet is shown in Drawing E1.03.
11. Refer to Section 16781 Video Distribution System for more information.

B. For Sub Video Distribution Cabinet Use:
1. Type 1 Wiring Cabinets shall be installed for use as a Sub Video Distribution Cabinets.
2. Sub Video Distribution Cabinet will serve as the connection point for video signals feed to individual areas.
3. Sub Video Distribution Cabinets shall have forced air vented system (fans) installed.
4. A double duplex power outlet shall be installed in one corner of the wiring cabinet that is on the swing side of the door.
5. The double duplex power outlet shall be installed with an isolated 20 amp circuit.
6. Sub Video Distribution Cabinets shall have rack mounted power strips installed.
7. Sub Video Distribution Cabinets shall be earth grounded.
8. Arrangement of equipment in Sub Video Distribution Cabinet is shown in Drawing E1.03.

9. Refer to Section 16781 Video Distribution System for more information.

3.10 PLACEMENT AND ADJUSTMENTS OF JACK LOCATIONS

A. Contractor shall locate jacks as near as possible to locations shown.

B. Where jack locations are obstructed by existing construction or Architectural features or to accommodate minor furniture re-arrangement, revise jack locations as directed by the Owner.

C. Any jack location revisions as directed by the Owner shall be accomplished at no change in Contract cost if re-location is within 20 feet and remains within the room shown on the plans.

3.11 PLACEMENT OF WIRING CABINET (MDF/IDF)

A. Placement of Wiring Cabinets shall be approved by the Owner.

B. Contractor shall remove or modify any items, such as shelves or cabinets, which may prevent the installation of the Wiring Cabinet.

C. Environmental conditions must be considered when placement of MDF/IDF Wire Cabinets are decided.

D. Room ventilation/cooling must be adequacy for equipment install inside MDF/IDF cabinets.

E. If necessary, cooling units must be installed to proved sufficient operational temperature ranges.

3.12 PERMANENT BUILDING AND PORTABLE CLASSROOM INSTALLATION DETAILS

A. Permanent building IDFs shall have at least two 2” GRC pipe ran from IDF to MDF.

B. Each portable is to have a type 4 NEMA junction box properly sized for this application with at least one 2” GRC pipe ran to a free standing pedestal.

C. Each site IDF shall have a dedicated run to the MDF.

D. “Daisy-chaining” or “Looping-thru” IDFs or a building is not allowed.

E. Permanent buildings and portables are not to be connected “daisy-chain” style.

F. EIA/TIA standards for conduit fill capacity shall be used. No more than 40% of pipe space shall be used.

G. All conduits installed underground shall be entirely encased in concrete 4 inches thick on all sides, with multiple conduits spaced not less than 2 inches apart, unless other- wise specified.

H. Provide approved conduit spacers as required to prevent any deflection of the conduits when concrete is poured and to preserve the position and alignment of the conduits in the concrete.

I. Conduits shall be tied to spacers.

J. Anchors shall be installed to prevent floating of the conduits during pouring of concrete.

K. All underground conduits shall be buried to a depth of not less than 24 inches below finished grade or top of the concrete envelope, unless otherwise specified.

L. Assemble the sections of conduits with approved fittings and stagger all joints. Cut ends of conduit shall be reamed to remove all rough edges.

M. The joints in all conduits shall be made liquid tight.

N. All bends and risers shall be completely below the surface where possible.

O. Two or more conduits runs in a common trench shall be separated by at least 2 inches of concrete.

P. Electric conduit runs, 600 volts or less, installed in a common trench with low voltage signal or data runs shall be separated from such by 12 inches.

Q. The Districts Inspector shall be called to the site for approval of all underground installations before and during concrete pour.

R. Where considered necessary by the Districts Inspector, a mandrel shall be drawn through each run of conduit in the presence of the Inspector, before and after pouring of concrete.

S. Non-metallic conduit installations shall comply with the following requirements:
1. All joints in PVC conduit shall be sealed by means of approved solvent-weld cement supplied by the conduit manufacturer.
2. All non-metallic conduit bends and deflections shall comply with the requirements of the applicable Electrical Code, except that the minimum radius of any bend or

   offset for any conduit sized from ½ to 1 ½ inches, inclusive, shall be not less than 24 inches.
3. All bends at risers shall be not less than 24 inches.
4. For conduits 2 inches and larger the radius of any bend or offset shall be not less than 36 inches, bends at riser may be 24 inches minimum.
5. All bends at riser for both metallic and non-metallic conduit runs shall be rigid steel conduit and comply with the requirements specified herein for underground rigid steel conduit installations.

T. A Pull Box shall be placed in a conduit run where:
1. The length is over 30 m (100 ft.).
2. There are more than two 90-degree bends or equivalent.
3. If there is a reverse (U shaped bend) in the run.

U. Rigid steel conduit installations shall comply with the following additional requirements:
   1. Conduit threads shall be filled with approved pipe joint compound before screwing into couplings.
   2. Bends and offsets shall be as specified for non-metallic conduit.
   3. Rigid conduit underground to be double wrapped with 10 mil tape.

I. Pull Boxes shall be placed in a straight section of conduit and not used in lieu of a bend.

W. The corresponding conduits ends should be aligned with each other

X. Provide all excavation, trenching, bedding, backfill, and restoration necessary for the installation of underground conduit systems

Y. All work shall comply with the rules and regulations of the Division of Industrial Safety and all other local and state and federal agencies having jurisdiction.

Z. Do not backfill work until it has been inspected, tested, and approved by the Districts Inspector or Project Manager.

AA. Nothing herein shall be construed as permitting work that is contrary to such rules, regulations, or codes.

BB. Do not backfill work until it has been inspected, tested, and approved by the Districts Inspector or Project Manager. See Section 02222 (Excavating, Backfilling, Compaction) for complete trench work details.

CC. Unistrut, used to support riser conduits, shall be attached to building/structure using appropriate screws/bolts and anchors.

EE. When attaching to a wood surface, 5/8 inch or greater in thickness, use a #10 or #12 plated screw and washer.

FF. When attaching to a plaster surface with wood sub-surface, 5/8 inch or greater in thickness, use method described in H. above.

GG. When attaching to a plaster surface without a wood sub-surface, or other suitable sub- surface, the Unistrut shall span two studs and be attached using #10 or #12 plated screws and washers.

HH. Gypsum Board, or similar, is not a suitable sub-surface.

II. When attaching to Cinder Block\Blocklite surfaces use anchors appropriate for that material. Use #10 or #12 plated screws and washer.

JJ. Cutting and Patching:
   1. The contractor shall do all cutting necessary for proper installation of this work and shall repair any damage done by himself or his workmen.
   2. All patching shall be of the same materials, workmanship and finish as existing and shall accurately match all surrounding work.
   3. If identical materials are not available or cannot be used where exposed surfaces are

involved, use materials that match existing adjacent surfaces to the fullest extent possible with regard to visual effect.

4. Use materials whose installed performance will equal or surpass that of existing materials.
5. All work shall be done by workers skilled in the required trade.

KK. It is the intention of Fresno Unified to have all wires concealed inside walls.

LL. Fishing of all walls is required unless field conditions dictate otherwise and is approved by FUSD Project Manager or their representative.

MM. Surface Mount Molding is to be used only as a last resort, and only when no other method is available to secure cables.

NN. When Surface Mount Molding is used it shall be installed in a professional manner. OO.

Surface Mount Molding must blend into the environment it is install within.

PP. Surface Mount Molding deemed unacceptable shall be immediately removed or replaced without cost to FUSD.

QQ. Environmental conditions must be considered when placements of MDF/IDF cabinets are decided.

RR. Room ventilation/cooling must be adequacy for equipment install inside MDF/IDF cabinets.

SS. If necessary, cooling units must be installed to proved sufficient operational temperature ranges.

TT. Refer to the following details for Permanent Building/Portable Classroom Installation examples:

1. E2-21: “Preferred Data and Cable/Outlet Detail”.
2. E2-22: “Typical Data and Cable/Outlet Detail”
3. E2-23: “Alternative 5 Data and Cable/Outlet Detail”

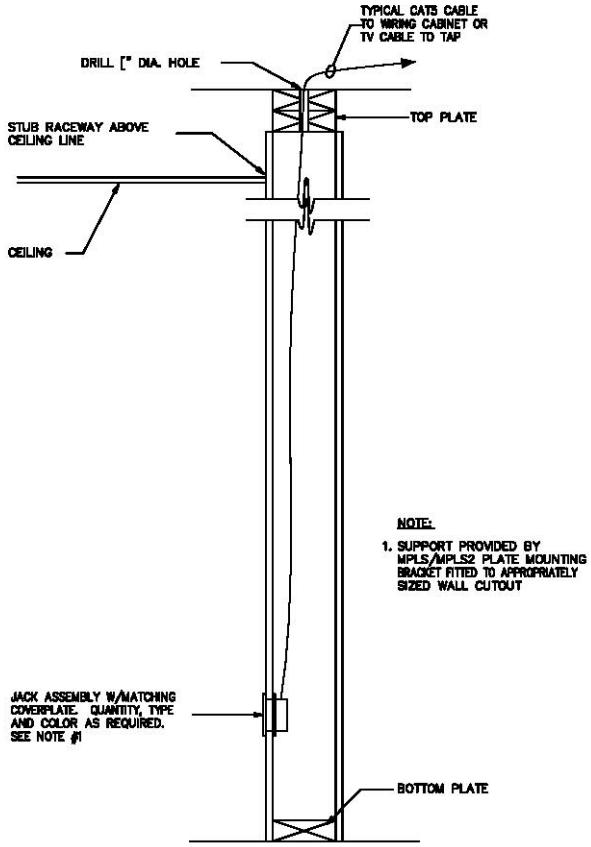

E2-21 PREFERRED DATA & CABLE / OUTLET DETAIL

Fresno Unified School District	FRESNO UNIFIED SCHOOL DISTRICT MAINTENANCE DEPARTMENT 4600 N. BRAWLEY AVE. P: 559.457.3261 FRESNO, CA 93722 F: 559.457.3709	LOCAL AREA NETWORKS VARIOUS SITES	SCALE: N.T.S. REVISION DATE: 02-23-07 SHEET #: E2-21

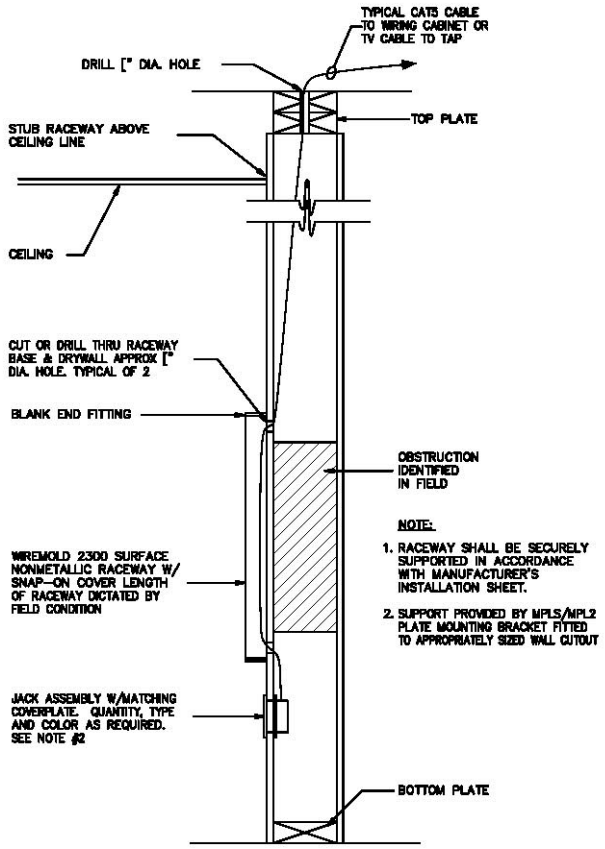

E2-22 TYPICAL DATA & CABLE / OUTLET DETAIL

Fresno Unified School District	FRESNO UNIFIED SCHOOL DISTRICT MAINTENANCE DEPARTMENT 4600 N. BRAWLEY AVE. P: 559.457.3261 FRESNO, CA 93722 F: 559.457.3709	LOCAL AREA NETWORKS VARIOUS SITES	SCALE: N.T.S. REVISION DATE: 02-23-07 SHEET #: E2-22

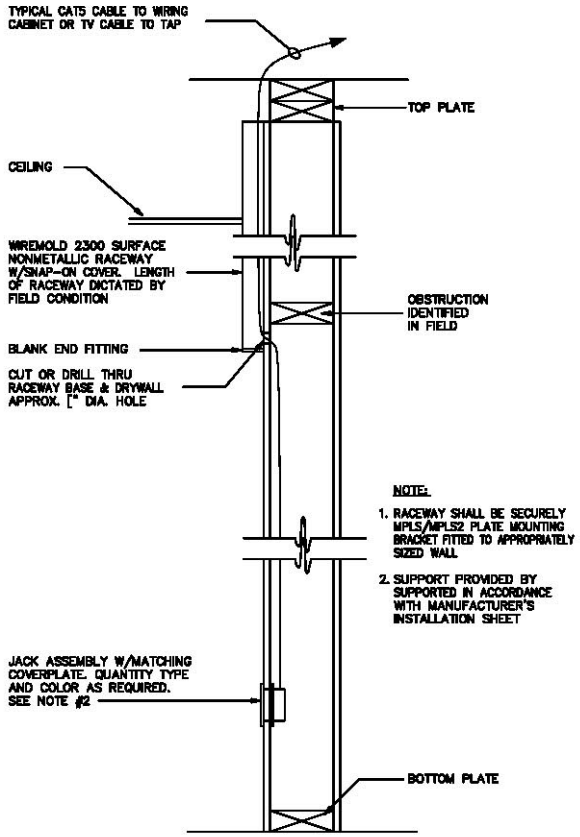

E2-23 ALTERNATE 5 DATA & TV CABLING / OUTLET DETAIL

Fresno Unified School District	FRESNO UNIFIED SCHOOL DISTRICT MAINTENANCE DEPARTMENT 4600 N. BRAWLEY AVE. P: 559.457.3261 FRESNO, CA 93722 F: 559.457.3709	LOCAL AREA NETWORKS VARIOUS SITES	SCALE: N.T.S. REVISION DATE: 02-23-07 SHEET #: E2-23

3.13 JUNCTION BOXES:

A. Maintain “water-tight” integrity of all Junction Boxes mounted on roofs.

B. Junction Boxes shall be firmly supported as advised by District Roofer.

C. Caulk around all exterior Junction Boxes to prevent water from entering building and/or box.

D. Caulk around all couplings/nipples between buildings.

3.14 PULL BOXES:

A. Pull Box Final Grade shall be a sloping ½” above compacted ground grade around site of installation.

B. Pull Box installation shall include grounding cable throughout conduit system in accordance with ANSI/TIA/EIA-607-1994 standards and any applicable electrical and fire codes.

C. Field conditions will dictate actual Pull Box, quantity, locations, and layout.

D. Back-fill at Pull Box shall compacted by mechanical means.

E. Back-fill shall not be “watered” in place.

F. Pull Box Layout as shown in detail drawings are representative of intended cable and Inner Duct placement and routing within Pull Boxes.

G. Refer to the following details for Pull Box Installation examples:
1. E2-04: “Typical Pull Box Layout Two Ends/One Side Duct Entry”.
2. E2-07: “Pull/Junction Box Section”.
3. E2-43: “Pull Box PB-1”.
4. E2-44: “Pull Box PB-7 Layout”.
5. E2-45: ”Typical Pull Box Layout PB-3”.
6. E2-46: “Pull Box Layout PB-4”.
7. E2-47: “Pull Box PB-5 Layout”.
8. E2-48: “Pull Box Detail”.
9. E2-49: “Pull Box PB-2 Layout”.
10. E2-50: “J-Box Section”.

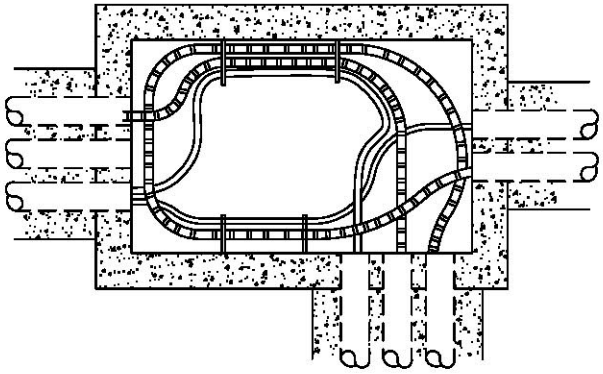

E2-04 TYPICAL PULLBOX LAYOUT
TWO ENDS / ONE SIDE DUCT ENTRY

Fresno Unified School District	FRESNO UNIFIED SCHOOL DISTRICT MAINTENANCE DEPARTMENT 4600 N. BRAWLEY AVE. P: 559.457.3261 FRESNO, CA 93722 F: 559.457.3709	LOCAL AREA NETWORKS VARIOUS SITES	SCALE: N.T.S. REVISION DATE: 02-23-07 SHEET #: E2-04

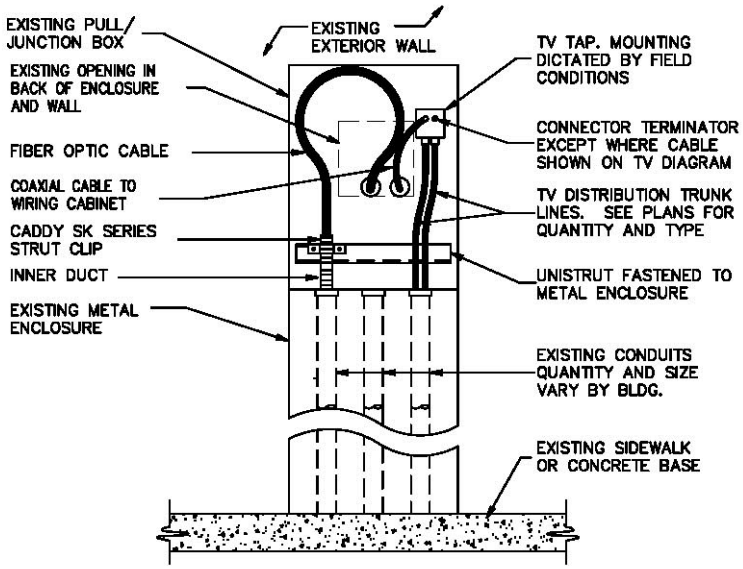

E2-07 PULL / JUNCTION BOX SECTION

Fresno Unified School District	FRESNO UNIFIED SCHOOL DISTRICT MAINTENANCE DEPARTMENT 4600 N. BRAWLEY AVE. P: 559.457.3261 FRESNO, CA 93722 F: 559.457.3709	LOCAL AREA NETWORKS VARIOUS SITES	SCALE: N.T.S. REVISION DATE: 02-23-07 SHEET #: E2-07

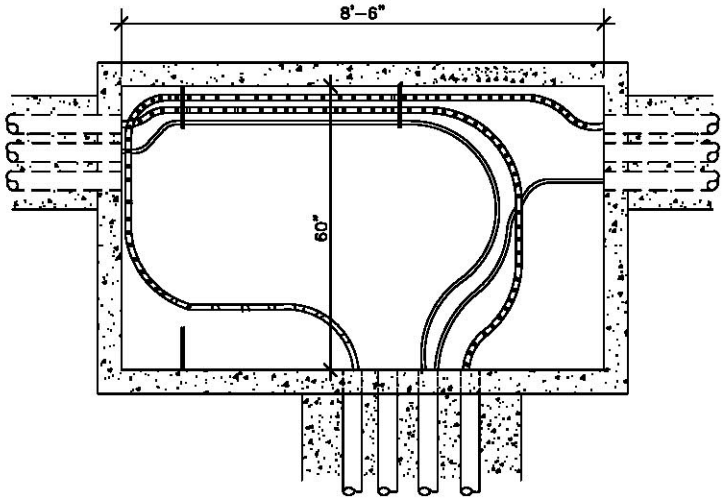

E2-43 PULLBOX PB-1

Fresno Unified School District	FRESNO UNIFIED SCHOOL DISTRICT MAINTENANCE DEPARTMENT 4600 N. BRAWLEY AVE. P: 559.457.3261 FRESNO, CA 93722 F: 559.457.3709	LOCAL AREA NETWORKS VARIOUS SITES	SCALE: N.T.S. REVISION DATE: 02-23-07 SHEET #: E2-43

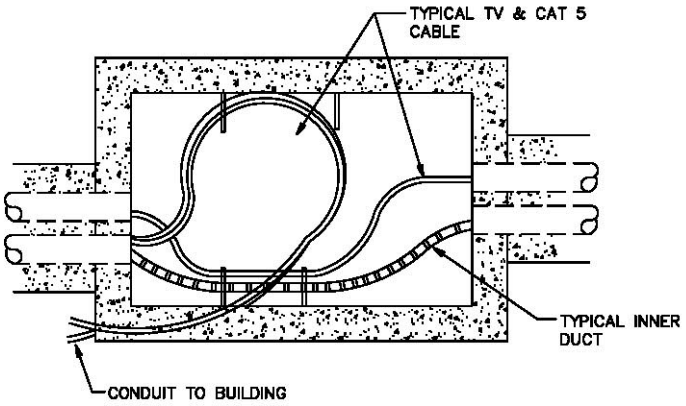

E2-44 PULLBOX PB-7 LAYOUT

Fresno Unified School District	FRESNO UNIFIED SCHOOL DISTRICT MAINTENANCE DEPARTMENT 4600 N. BRAWLEY AVE. P: 559.457.3261 FRESNO, CA 93722 F: 559.457.3709	LOCAL AREA NETWORKS VARIOUS SITES	SCALE: N.T.S. REVISION DATE: 02-23-07 SHEET #: E2-44

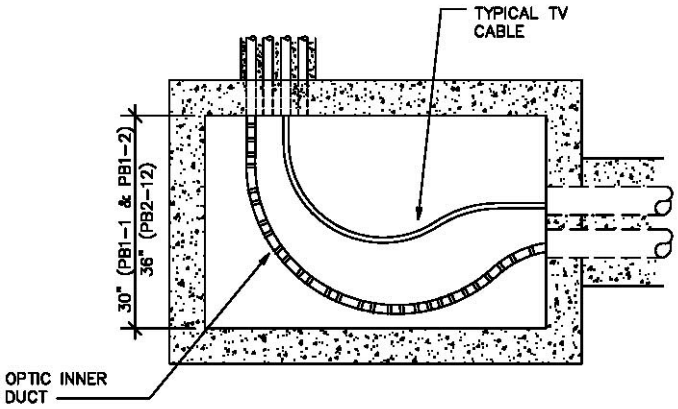

E2-45 TYP. PULLBOX LAYOUT PB-3

Fresno Unified School District	FRESNO UNIFIED SCHOOL DISTRICT MAINTENANCE DEPARTMENT 4600 N. BRAWLEY AVE. P: 559.457.3261 FRESNO, CA 93722 F: 559.457.3709	LOCAL AREA NETWORKS VARIOUS SITES	SCALE: N.T.S. REVISION DATE: 02-23-07 SHEET #: E2-45

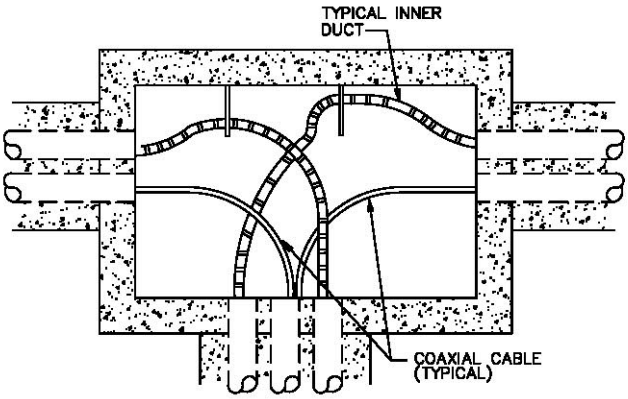

E2-46 PULLBOX PB-4 LAYOUT

Fresno Unified School District	FRESNO UNIFIED SCHOOL DISTRICT MAINTENANCE DEPARTMENT 4600 N. BRAWLEY AVE. P: 559.457.3261 FRESNO, CA 93722 F: 559.457.3709	LOCAL AREA NETWORKS VARIOUS SITES	SCALE: N.T.S. REVISION DATE: 02-23-07 SHEET #: E2-46

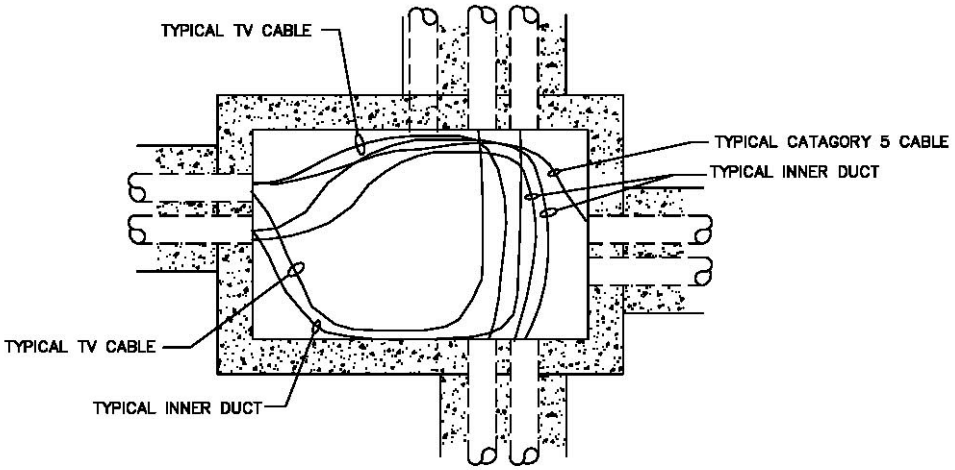

E2-47 PULLBOX PB5 LAYOUT

Fresno Unified School District	FRESNO UNIFIED SCHOOL DISTRICT MAINTENANCE DEPARTMENT 4600 N. BRAWLEY AVE. P: 559.457.3261 FRESNO, CA 93722 F: 559.457.3709	LOCAL AREA NETWORKS VARIOUS SITES	SCALE: N.T.S. REVISION DATE: 02-23-07 SHEET #: E2-47

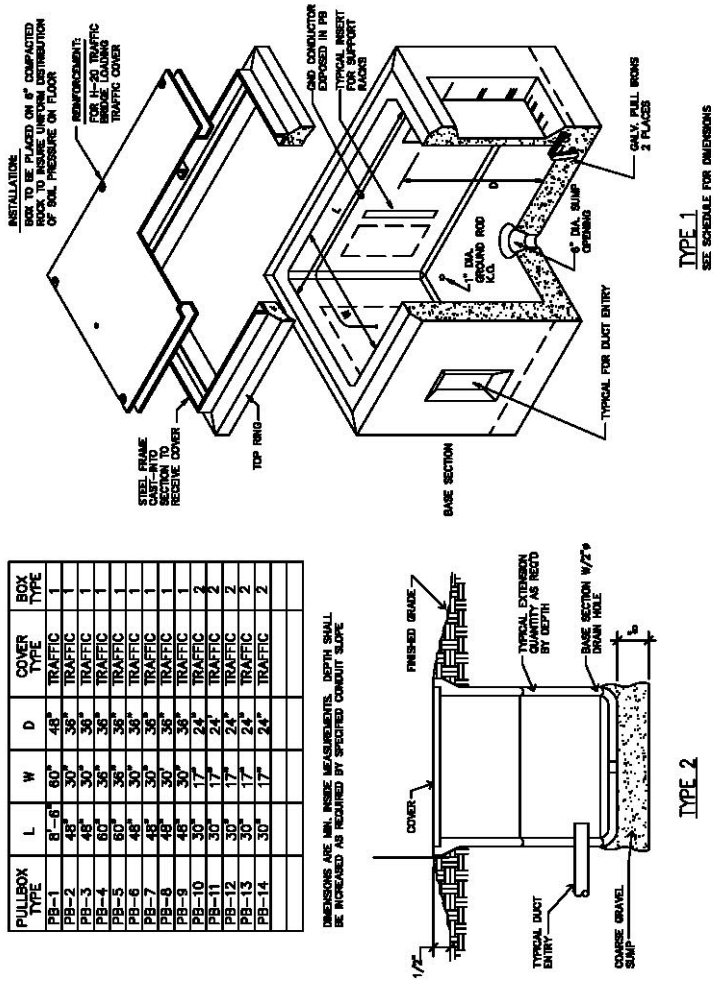

PULLBOX TYPE	L	W	D	COVER TYPE	BOX TYPE
PB-1	8'-6"	60"	48"	TRAFFIC	1
PB-2	48"	30"	36"	TRAFFIC	1
PB-3	48"	30"	36"	TRAFFIC	1
PB-4	60"	36"	36"	TRAFFIC	1
PB-5	60"	36"	36"	TRAFFIC	1
PB-6	48"	30"	36"	TRAFFIC	1
PB-7	48"	30"	36"	TRAFFIC	1
PB-8	48"	30"	36"	TRAFFIC	1
PB-9	48"	30"	36"	TRAFFIC	1
PB-10	30"	17"	24"	TRAFFIC	2
PB-11	30"	17"	24"	TRAFFIC	2
PB-12	30"	17"	24"	TRAFFIC	2
PB-13	30"	17"	24"	TRAFFIC	2
PB-14	30"	17"	24"	TRAFFIC	2

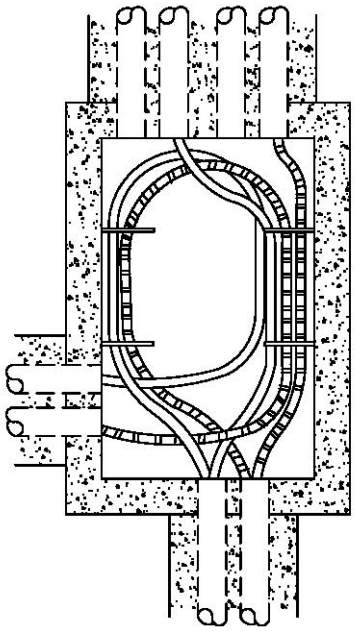

E2-49 PULLBOX PB-2 LAYOUT

Fresno Unified School District	FRESNO UNIFIED SCHOOL DISTRICT MAINTENANCE DEPARTMENT 4600 N. BRAWLEY AVE. P: 559.457.3261 FRESNO, CA 93722 F: 559.457.3709	LOCAL AREA NETWORKS VARIOUS SITES	SCALE: N.T.S. REVISION DATE: 02-23-07 SHEET #: E2-49

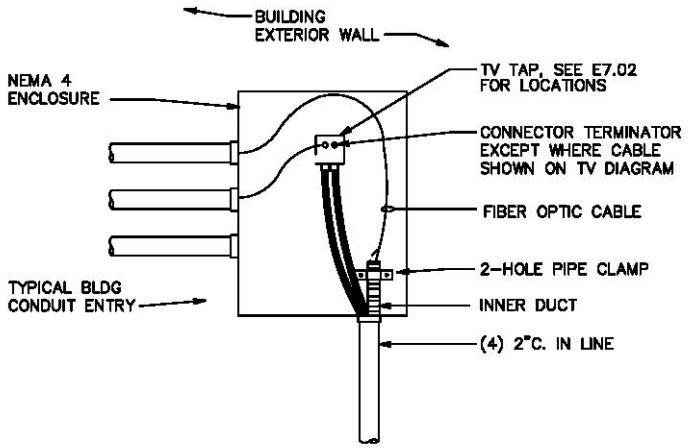

SEE FLOOR PLANS AND DETAILS FOR CONDUIT QUANTITY,
SIZE AND ORIENTATION.

E2-50 J-BOX SECTION

Fresno Unified School District	FRESNO UNIFIED SCHOOL DISTRICT MAINTENANCE DEPARTMENT 4600 N. BRAWLEY AVE. P: 559.457.3261 FRESNO, CA 93722 F: 559.457.3709	LOCAL AREA NETWORKS VARIOUS SITES	SCALE: N.T.S. REVISION DATE: 02-23-07 SHEET #: E2-50

3.15 ELECTRICAL POWER FOR ALL EQUIPMENT CABINETS/RACKS

A. All Equipment Cabinets/Racks shall have the following electrical connections install:
   1. Install a duplex convenience outlet, 15A, 125V, three wire, with grounding pole within the equipment cabinet.
   2. Obtain power from the nearest electrical panel board with capacity to support the additional load.
   3. Install a new 20A circuit breaker to provide a dedicated circuit for the Equipment Cabinet.
   4. If existing panel board has no space for additional circuit breakers install a new branch panel board to provide power for this location.

3.16 CONDUIT, RACEWAY, AND EQUIPMENT CABINETS/RACKS INSTALLATION

A. Furnish and install all necessary conduits, raceways, and equipment cabinets for the Data and Coaxial Cabling.
   1. Use of existing conduits and raceways is not allowed.
   2. The Contractor shall suggest, after a review of Site conditions, routing of Conduits used to connect the various parts of the work.
   3. Preferred routing, in order of District preference, is:
      a. In concealed spaces, i.e., attic spaces in buildings or corridors, even if Contractor must install hatches to provide entry into such spaces (refer to E2-26 for Detail).
      b. Underground.
      c. On top of corridor roofs.
      d. Under corridor roof, with the conduit fastened flush with the surface.
      e. On visible vertical surfaces.
      f. Combination of above.
   4. In attic spaces with “existing” Heat Detectors “J-Hooks may be used to contain the cables. Hatches must be installed, if necessary, to make use of this space (refer to E2-26 for Detail).
   5. In attic spaces with NO “existing” Heat Detectors, EMT or ENT must be installed and terminated into Junction Boxes, which shall be mounted outside of the attic space.
   6. Holes created to gain entry for the installation of EMT/ENT shall be covered and sealed to make the space non-accessible.
   7. N.F.P.A. requires that these spaces be equipped with Heat Detectors if they are made accessible.
   8. Districts preference is to conceal all wiring pathways.
   9. Contractor shall make reasonable effort to accomplish this goal.
   10. Where corridor or other attic spaces would provide this concealment contractor shall install EMT, ENT (Electrical Non-metallic Tubing), or “J-Hooks” as may be appropriate for the type of space.
   11. Conduits which interconnect buildings or classroom wings shall be 2 each, 2 inch conduits minimum.
   12. The District’s Project Manager will have final approval of all conduit routing.

3.17 TESTING:

A. Category 6 Cable Testing and Certification:
   1. All Category 6 cable and data jacks shall be tested following installation.

      Testing shall be in accordance with TIA/EIA TSB-67 for link testing at Category 6 standards or newer, and include the following:
      a. Wire Map.
      b. Length.
      c. Attenuation.
      d. PS-ELFEXT.
      e. SRL.
      f. PS-NEXT.
   2. Use commercially manufactured field tester with hard copy of test results.
   3. Field tester shall meet TIA/EIA TSB-67, Level II or newer, accuracy criteria.
   4. Field tester shall be Microtest Omni-Scanner or equal.
   5. Any cable or termination, which fails to test, shall be replaced and retested.
   6. Three copies (hard copy) of the test results shall be delivered to the Owner prior to project acceptance.

B. Fiber Optic Cable Testing and Certification:
   1. All Fiber Optic Cable shall be tested using an approved Optical Power Meter.
   2. Power Meter measurements shall be made from both ends of the cable.
   3. Measured results shall be within cable manufacturer's specifications.
   4. Cable shall be tested at both 850 nm and 1300 nm for Multi-mode fiber and at 1300 and 1550 nm for Single-mode fiber.
   5. Any cable or termination, which does not meet manufacturer's specifications, shall be replaced and retested.
   6. Provide three copies (hard copy), bounded, of the test results for Owner's approval before project acceptance.
   7. All Power Meter Testing shall be done in the presence of a District appointed Observer.

B. Over-all System Testing:
   1. Contractor shall test each Data Jack utilizing a method which tests the Channel Link using actual 802.3 data flow.
   2. The method employed shall use a device inserted at the Data Jack and a device connected to the central point of the LAN to show that there is a connection and communications between the two devices.
   3. One means of fulfilling this requirement is to employ an approved network analyzer.
   4. Fluke OmniView Series II Network Analyzer meets this requirement.
   5. The unit shall be connected at the terminal end LAN's central point and the other unit shall be inserted at any Data Jack in the system.
   6. All Testing shall be done in the presence of a District appointed Observer.

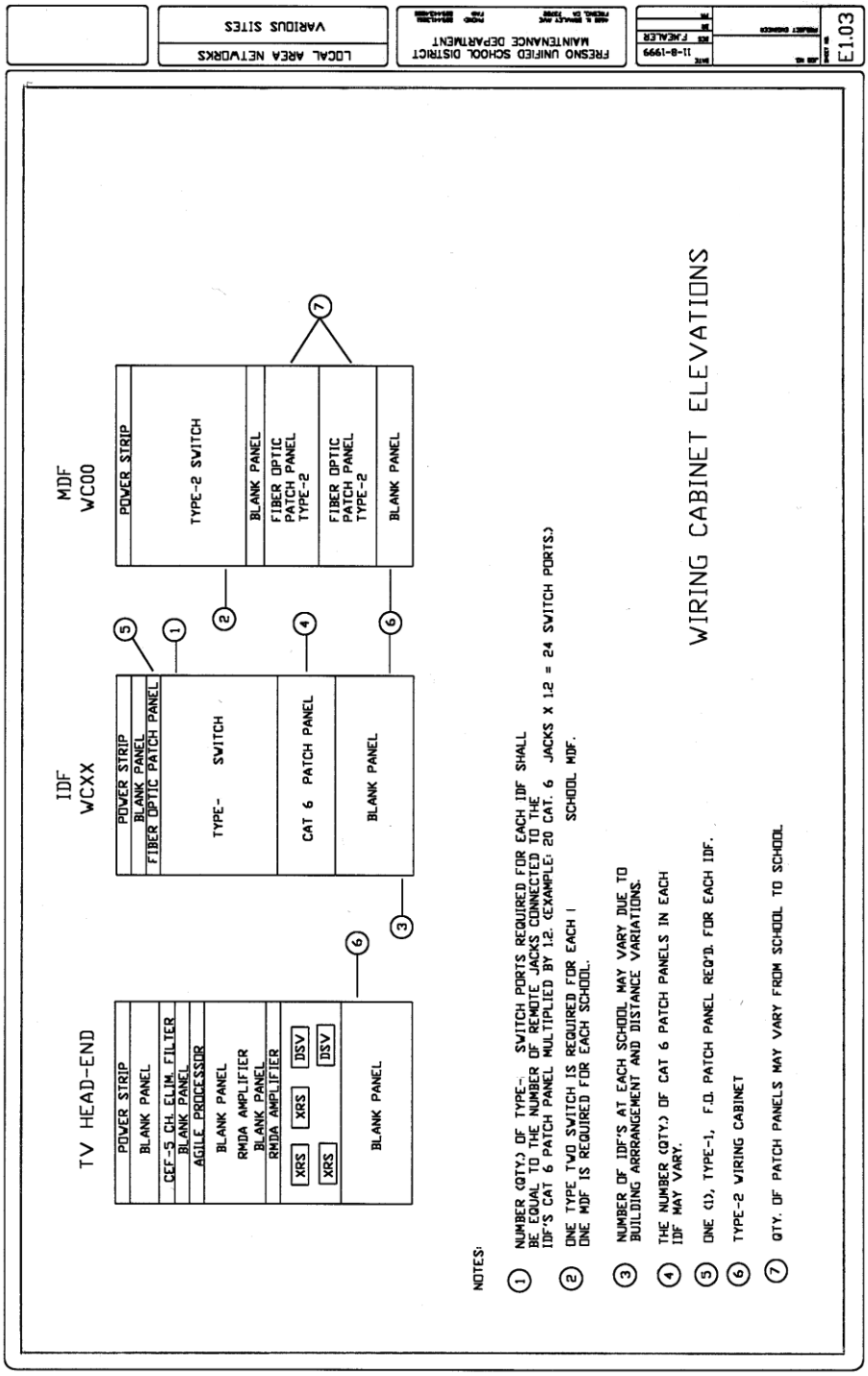
LOCAL AREA NETWORKS
VARIOUS SITES
FRESNO UNIFIED SCHOOL DISTRICT
MAINTENANCE DEPARTMENT
11-8-1999
FJMCMER
E1.03
TV HEAD-END
POWER STRIP
BLANK PANEL
CEF-5 CH. ELIM. FILTER
BLANK PANEL
AGILE PROCESSOR
BLANK PANEL
RMDA AMPLIFIER
BLANK PANEL
RMDA AMPLIFIER
XRS
XRS
DSV
DSV
XRS
BLANK PANEL
IDF
WCXX
POWER STRIP
BLANK PANEL
FIBER OPTIC PATCH PANEL
TYPE- SWITCH
CAT 6 PATCH PANEL
BLANK PANEL
MDF
WC00
POWER STRIP
TYPE-2 SWITCH
BLANK PANEL
FIBER OPTIC PATCH PANEL TYPE-2
FIBER OPTIC PATCH PANEL TYPE-2
BLANK PANEL
WIRING CABINET ELEVATIONS
NOTES:
1 NUMBER (QTY.) OF TYPE-, SWITCH PORTS REQUIRED FOR EACH IDF SHALL BE EQUAL TO THE NUMBER OF REMOTE JACKS CONNECTED TO THE IDF'S CAT 6 PATCH PANEL MULTIPLIED BY 1.2. (EXAMPLE: 20 CAT. 6 JACKS X 1.2 = 24 SWITCH PORTS)
2 ONE TYPE TWO SWITCH IS REQUIRED FOR EACH I SCHOOL MDF.
ONE MDF IS REQUIRED FOR EACH SCHOOL.
3 NUMBER OF IDF'S AT EACH SCHOOL MAY VARY DUE TO BUILDING ARRRANGEMENT AND DISTANCE VARIATIONS.
4 THE NUMBER (QTY.) OF CAT 6 PATCH PANELS IN EACH IDF MAY VARY.
5 ONE (1), TYPE-1, F.O. PATCH PANEL REQ'D. FOR EACH IDF.
6 TYPE-2 WIRING CABINET
7 QTY. OF PATCH PANELS MAY VARY FROM SCHOOL TO SCHOOL

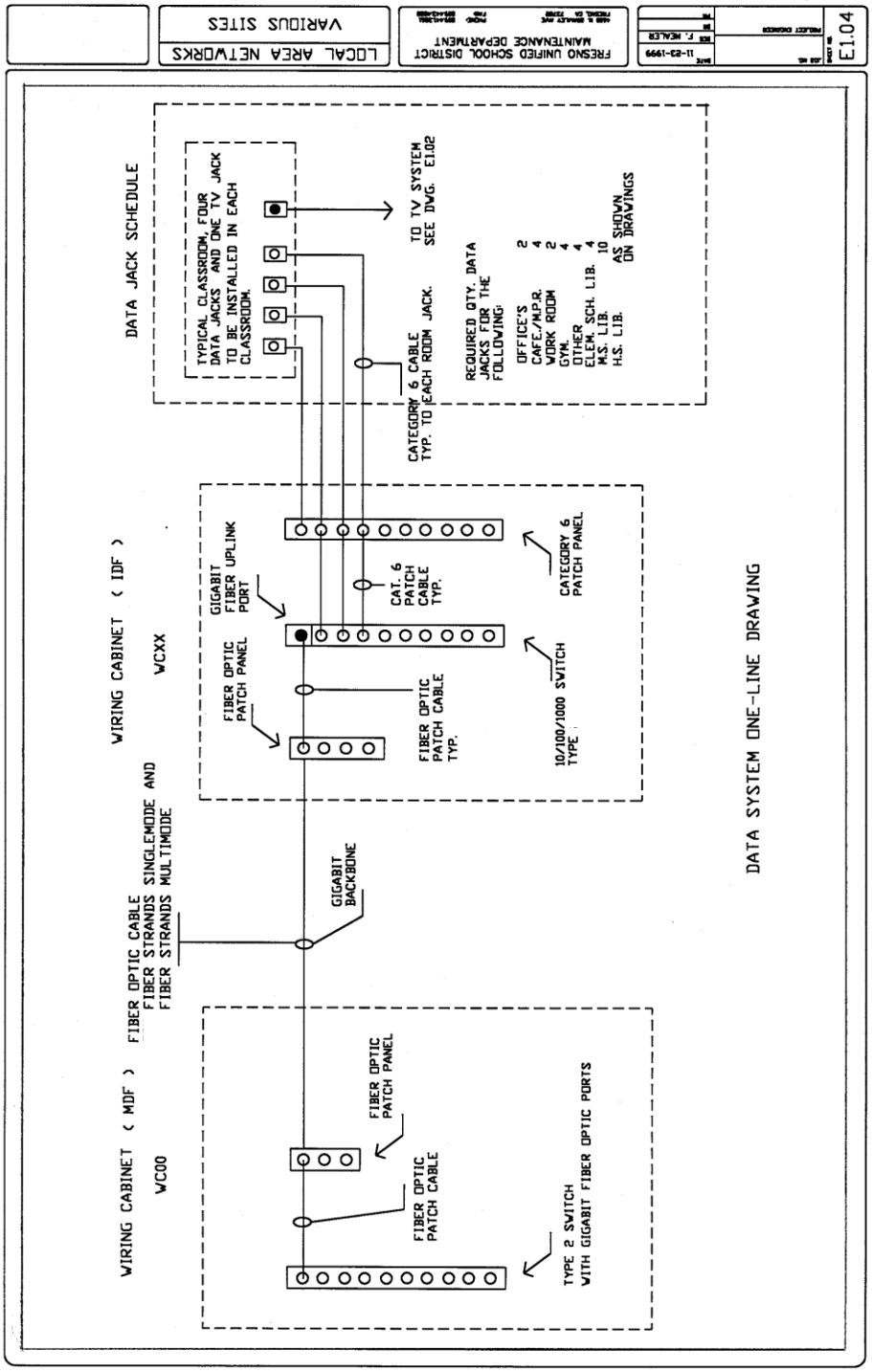
DATA JACK SCHEDULE
TYPICAL CLASSROOM, FOUR DATA JACKS AND ONE TV JACK TO BE INSTALLED IN EACH CLASSROOM.
TO TV SYSTEM SEE DWG. E102
CATEGORY 6 CABLE TYP. TO EACH ROOM JACK.
REQUIRED QTY. DATA JACKS FOR THE FOLLOWING:
OFFICE'S 2
CAFE./M.P.R. 4
WORK ROOM 2
GYM. 4
OTHER 4
ELEM. SCH. LIB. 4
M.S. LIB. 10
H.S. LIB. AS SHOWN ON DRAWINGS
WIRING CABINET (IDF)
WCXX
GIGABIT FIBER UPLINK PORT
CAT. 6 PATCH CABLE TYP.
CATEGORY 6 PATCH PANEL
FIBER OPTIC PATCH PANEL
FIBER OPTIC PATCH CABLE TYP.
10/100/1000 SWITCH TYPE
FIBER OPTIC CABLE
FIBER STRANDS SINGLEMODE AND
FIBER STRANDS MULTIMODE
GIGABIT BACKBONE
WIRING CABINET (MDF)
WC00
FIBER OPTIC PATCH PANEL
FIBER OPTIC PATCH CABLE
TYPE 2 SWITCH WITH GIGABIT FIBER OPTIC PORTS
DATA SYSTEM ONE-LINE DRAWING
LOCAL AREA NETWORKS
VARIOUS SITES
FRESNO UNIFIED SCHOOL DISTRICT
MAINTENANCE DEPARTMENT
E1.04

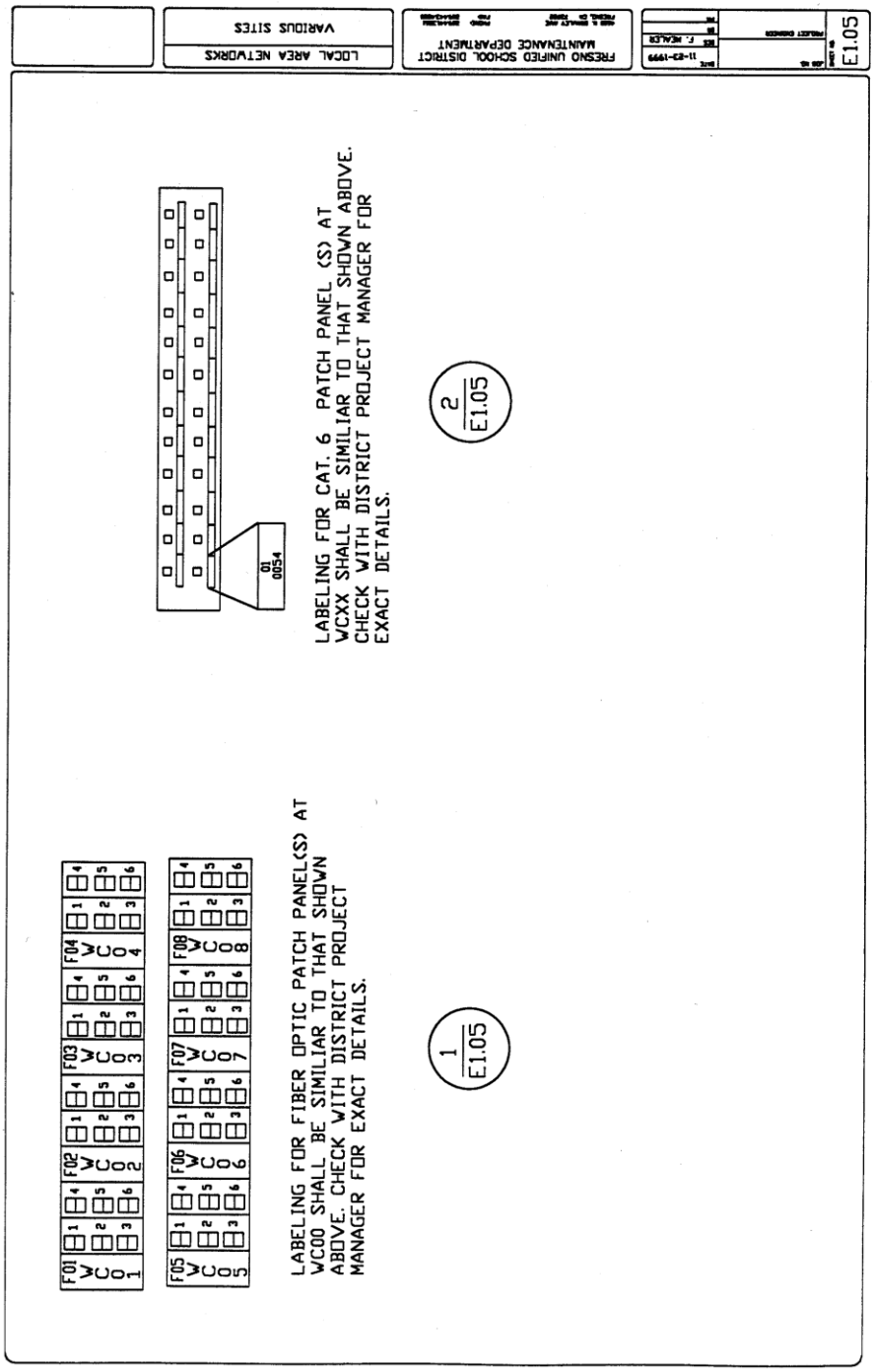

END OF SECTION

SECTION 27 51 16 – PUBLIC ADDRESS AND CLOCKS

PART 1 – GENERAL

1.01 RELATED DOCUMENTS

A. Drawings and general provisions of the Contract, including General and Supplementary Conditions and Division 01 Specification Sections shall form a part of this Section, with the same force and effect as though repeated here.

1.02 SCOPE

A. Basis of Design for the Intercommunication system: The intercommunication system design is primarily based on the use of an analog type intercommunication system.

1. The Contractor shall provide, install, connect, test, label and place into operation a complete intercommunication system in accordance with the requirements of the California Code of Regulations Title 24, Part 6, and as herein specified.

2. Provide intercommunication system equipment as indicated by drawings, schedules, and as specified herein, limited to loudspeakers/horns, speaker enclosures and back boxes, baffles, mounting brackets, supports and tile bridges, conduit, wiring, terminal blocks and call buttons.

3. Headend intercommunication system equipment is excluded from the scope of this project. Headend intercommunication system equipment and shall be provided and installed by the Fresno Unified Maintenance Department.

B. Basis of Design for the Clock system: The clock system design is primarily based on the use of a wireless master clock system.

1. The Contractor shall provide, install, connect, test and place into operation a complete wireless clock system in accordance with the requirements herein specified.
2. Provide wireless clock system equipment as indicated by drawings, schedules, and as specified herein, including but not limited to master clock, wireless transmitters and wireless analog clocks.

1.03 COORDINATION

A. Confirm interface of intercommunication system with local area network and telephone system. Report discrepancies to the Architect or Electrical Engineer.

B. Coordinate to avoid conflicts between supports, fittings, and mechanical equipment.

C. Coordination Drawings, Required: Prepare coordination drawings including plans, elevations, sections, and details of the work for each trade representing the work that will be installed.

Clearly indicate and identify conflicts between components for review by the Architect. Provide Coordination Drawings as follows:

1. Overhead Work and Work Above Finished Ceilings: Include subframing for support of ceiling and wall systems, conduit and piping runs, plumbing, mechanical, and electrical equipment, and related Work. Locate components to accommodate layout of all ceiling mounted devices and equipment indicated on the Drawings. Show the work of each trade including, but not limited to, pipe runs, mechanical ductwork, cable trays, conduit runs, cabling and bracing and supports.
   a. Indicate locations of all junction and outlet boxes, dampers, valves, cleanouts and other devices requiring human access for maintenance and repair. Where access panels are required, show locations and indicate size.
   b. Show the height above finish floor for each item, demonstrating sufficient space for installation and maintenance. Indicate sizes of ducts, piping and similar items.
   c. Layout of work shall be done in such a manner to avoid conflicts between the work of different trades, finish ceiling heights, soffits, light fixtures or other finish work at ceilings and soffits.
   d. Should unavoidable conflicts occur that affect finish ceiling and soffit heights, methods of installations, methods of construction or means of accessibility, the contractor shall clearly identify each location for review by the Architect.

1.04 SUBMITTALS

A. Submittals for this Section shall be made according to the Conditions of the Contract, Division 01 Specification Sections and Division 16 Specification Sections.

B. Shop Drawings:

1. Composite wiring and/or schematic diagram of each control circuit as proposed to be installed.

2. Show exact location of all digital devices, including at minimum sensors, room controllers, and switches for each area on reflected ceiling plans.

3. Provide room/area details including products and sequence of operation for each room or area. Illustrate typical acceptable room/area connection topologies.
4. Network riser diagram including floor and building level details. Include network cable specification and end-of-line termination details, if required. Illustrate points of connection to integrated systems. Coordinate integration with mechanical and/or other trades.

C. Product Data: Catalog sheets, specifications and installation instructions.

D. Include data for each device which:
1. Indicates where speaker and call button is proposed to be installed.
2. Prove that the sensor is suitable for the proposed application.

1.05 QUALITY ASSURANCE

A. Intercommunication system equipment and wiring shall be installed and tested by State of California certified Voice Data Video Technician installers that have held their certification no less than 3-years.

B. All electrical components, devices and accessories shall be listed with Underwriters Laboratories, Inc. (or other testing agency acceptable to authorities having jurisdiction), shall meet their requirements, shall bear their label wherever standards have been established and label service is regularly furnished by that agency, and shall be marked for intended use.

1.06 CODES AND STANDARDS

A. All work and materials shall fully comply with current rules and regulations of all applicable codes. Nothing in these Drawings or Specifications shall be interpreted as to permit any work not in compliance with these codes. Where work is detailed and/or specified to a more restrictive standard or higher requirement, that standard or requirement shall govern such work. Installation shall comply with the following codes and standards:

1. California Code of Regulations (CCR)
   a. Title 8, Industrial Relations
   b. Title 17, Public Health
   c. Title 24, Building Standards
2. 2019 California Building Code.
3. 2019 California Fire Code.
4. 2019 California Electrical Code.
5. Local Codes.
6. ANSI/TIA/EIA-568-C-2012 Commercial Building Telecommunications Standard

7. ANSI/TIA/EIA-569-C-2012 Commercial Building Standard for Telecommunications Pathways and Spaces
8. ANSI/TIA/EIA-606-B-2012 Administration Standard for Telecommunication Infrastructure of Commercial Buildings
9. ANSI/TIA/EIA-607-B-2013 Grounding and Bonding Requirements for Telecommunications in Commercial Buildings
10. BICSI TDMM Telecommunications Distribution Methods Manual 12th Edition
11. NEMA VE1 Cable Tray Systems
12. NEMA VE2 Cable Tray Installation Guides
13. UL 467 Grounding and Bonding Equipment.
14. UL 1479 Fire Tests of Through-Penetration Firestops

1.07 WARRANTY

A. The **Warranties** specified in this Article shall not deprive the Owner of other rights the Owner may have under provisions of the Contract Documents and shall be in addition to, and run concurrent with, other warranties made by the Contractor under requirements of the Contract Documents.

B. Provide five-year manufacturer's warranty on all intercommunication system equipment and wiring.

PART 2 – PRODUCTS

2.01 MANUFACTURERS

A. This intercommunication system design is based on the use of equipment manufactured by CareHawk, Atlas Sound, and Bogen. Subject to compliance with project requirements equivalent products may be considered.

1. CareHawk;

2. Atlas Sound;

3. Approved equivalent

B. This wireless clock system design is based on the use of equipment manufactured by Sapling. Subject to compliance with project requirements, equivalent products by one of the following manufacturers may be considered:

1. Sapling;

2. Approved equivalent

2.02 HEADEND EQUIPMENT

A. Provide new headend equipment where called for on the plans.

B. PA Headend

1. CareHawk CH1000(LT) series

C. Clock Headend

1. Sapling model: SMA-2S0-1100-1

2.03 SPEAKERS

A. Indoor Speakers

1. Ceiling mounted speakers shall consist of the following components:
   a. Baffle - Round Recessed Baffle for 8” loudspeaker with concealed loudspeaker mounting studs. Two-piece corrosion resistant steel construction with textured white finish. Atlas Sound model: 61-8W
   b. Speaker Enclosure – Round recessed enclosure for 8” loudspeaker with four 1/2”-3/4” knockouts, four j-clips and two flexible perforated mounting straps. One-piece corrosion resistant steel construction with undercoat and epoxy finish, patch-jute lined. Atlas Sound model: CS95-8
   c. Tile Bridge – Load-bearing tile bridge for 8” loud speaker. Rust-resistant 22- gauge electrogalvanized steel construction. Atlas Sound model: 81-8R
   d. Loudspeaker – 8” dual cone loud speaker with transformer. Atlas Sound model: C10AT72

2. Wall mounted combination clock/speakers shall consist of the following components:
   a. Baffle - Recessed Clock/loudspeaker Baffle for 8” loudspeaker with concealed double-action torsion spring. Featuring a corrosion resistant steel grille and trim ring mounted to an 18-guage corrosion resistant steel panel with cutouts for mounting an 8” diameter loudspeaker and a universal analog clock mounting bracket. White epoxy finish. Atlas Sound model: 830-812A
   b. Loudspeaker – 8” dual cone loud speaker with transformer. Atlas Sound model: C10AT72
   c. Clock – Wireless analog clock with microprocessor based movement. Each wireless clock shall have an internal antenna and act as a repeater

and transmitter. Wireless clocks shall implement 915-928MHz frequency hopping technology and have a diagnostic mode and quick correction (within 5- minutes). Sapling model: SAL-2; Provide and install two Duracell ProCell Type D batteries in each clock.

B. Gymnasium Speakers

1. Speakers located in Gymnasiums shall consist of the following components:
   a. Baffle – Vandal-resistant Square Recessed Baffle for 8" loudspeaker with concealed loudspeaker mounting studs. Special aluminum alloy construction with textured white finish. Atlas Sound model: VP161A-APF
   b. Speaker Enclosure – Square surface mount enclosure for AFP series horns with conduit knockout and mounting holes located in the top. Atlas Sound model:
      L20-213
   c. Loudspeaker – 15-watt omni-purpose flange-mount loudspeaker with transformer and double–re-entrant design. Atlas Sound model: APF-15T

C. Relocatable Classroom Speakers

1. Speakers located in Relocatable Classrooms shall consist of the following components:
   a. Loudspeaker – Surface mounted combination loudspeaker transformer baffle design. Atlas Sound model: WD417-72 + 50-ohm pos volume control.

D. Exterior Speakers

1. Exterior Speakers shall consist of the following components:
   a. Single and Twin Reentrant Loudspeakers – 30-watt, weatherproof all metal construction, designed for one-way or two-way communication. Rotary tap impedance selector, tilt and swivel base for positioning with mounting bracket and screw terminals for mounting. Bogen model: SPT30A (single), BDT30A (twin);
   b. Mounting strap – Mounts to electrical box. Bogen model: HSES10
   c. Terminal Cover – Allows connection of conduit fitting to horn speaker. Bogen model: TCSPT1

2.04 CONDUIT AND WIRING

A. Conduit - All intercommunication system cable and wiring shall be in EMT or RMC type conduit. Refer to Specification Section 16050 for conduit specifications.

B. Wiring –

1. Wiring from terminal block to speaker: 2-pair, 22AWG stranded copper conductors with 1-pair (black, red) shielded and 1-pair (white, green) unshielded having an overall gray PVC jacket. NEC rating CMR, NEC Article 800, UL Listed. UL 1666 Riser Flame Test flame rating. RoHS compliant. . NEC rating CMR, NEC Article 800, UL Listed. UL 1666 Riser Flame Test flame rating. RoHS compliant. West Penn model: 357

2. Wiring between terminal blocks: multi-pair, 22AWG solid annealed copper individually insulated conductors twisted into pairs with non-hygroscopic dielectric tape core wrap shielded with an overall corrugated copolymer coated 8-mil aluminum tape applied longitudinally with an overlap and having an overall black polyethylene jacket marked with pair count, AWG and sequential length markings at two foot intervals Superior Essex SEALPIC models: 01-059-40 (12-pair); 01-062-40 (25-pair); 01-065-40 (50-pair); 01-069-40 (100-pair);

3. Call Button: West Penn #357 between speaker and call button location.

C. Terminal Blocks - Intercommunication system terminal blocks shall have Category 5e S66 style clips for terminating 22-26 AWG solid insulated cable or 18-19 AWG solid stripped cable. High impact flame retardant thermoplastic with fanning strips for cable management and labeling. Siemon model: S66M1-50

2.05 CALL BUTTONS

A. Call button locations shall be rough-in only and shall be located at teacher/staff workstations. Provide rough-in for one call button in each classroom and office. Call button rough-in shall consist of a single-gang metal low-voltage mounting plate flush mounted to the finished wall with a blank stainless steel cover plate installed and one West Penn #357, 4#22AWG stranded tinned copper conductors (2) shielded + (2) unshielded with overall jacket run from the nearest intercommunication system speaker to the call button rough-in location and labeled “FUTURE CALL BUTTON”.

2.06 WIRELESS MASTER CLOCK SYSTEM

A. Master Clock – The wireless master clock system shall be the SMA Series Master Clock (V8) with LED readout, wall mountable, (S)NTP Input with ten programed server addresses and DHCP. The wireless master clock shall interface with 59- and 58-minute correction, National Time and Rauland, and Dukane digital and have 12- or 24-hour modes. The wireless master clock shall have bias seconds output adjusting the time plus or minus a few seconds or minutes to fit your application while still receiving input from another source. The wireless master clock shall have an RS485 input and output for time correction and synchronization, two relays for simultaneous correction of two

synchronous-wired clock systems. The master clock system shall be microprocessor based with ten-year battery backup for time keeping and have web interface software installed that allows control of all of the IP settings through an intuitive graphical user interface that allows configuration of all settings of the SMA. The master clock shall also include GPS input feature, a wireless transmitter/repeater for correction of SAL-2 series analog clocks and the (S)NTP server software upgrade to allow interface with other devices.

B. Wireless Clock – The wireless analog clock shall be compatible with the Sapling SMA Series Master Clock (V8) with microprocessor-based movement. Each wireless clock shall have an internal antenna and act as a repeater and transmitter. Wireless clocks shall implement frequency hopping technology and have a diagnostic mode and quick correction (within 5- minutes). Sapling model: SAL-2; Provide and install two Duracell ProCell Type D batteries in each clock.

PART 3 – EXECUTION

3.01 ELECTRICAL INSTALLATION

A. All material, equipment, devices, etc., shall be installed in accordance with the recommendations of the manufacturer of the particular item. The Contractor shall be responsible for all installations contrary to the manufacturer's recommendations. The Contractor shall make all necessary changes and revisions to achieve such compliance, with FUSD Electronics shop approval. Manufacturer's installation instructions shall be delivered to and maintained at the job site throughout the construction of the project.

B. The layout and installation of electrical work shall be coordinated with the overall construction schedule to prevent delay in completion of the project.

C. Dimensions and information regarding accurate locations of equipment and structural limitations and finish shall be verified with other sections.

D. The drawings do not show all raceway, wiring, offsets, bends, special fittings, junction or pull boxes necessary to meet job conditions. Items not shown as indicated, where are clearly necessary for proper operation or installation of systems shown, shall be provided as required, at no increase in contract price.

E. Materials and Components shall be installed level, plumb, and parallel and perpendicular to other building systems and components, unless otherwise indicated.

F. Electrical equipment, outlets, junctions and pull boxes shall be installed in accessible locations, avoiding obstructions, preserving maximum headroom, and keeping openings and passageways clear.

G. Equipment shall be installed to facilitate service, maintenance, and repair or replacement of components. It shall be connected for ease of disconnecting, with minimum interference with other installations. Minor adjustments in the locations of equipment shall be made where necessary providing such adjustments do not adversely affect function of the equipment. Major adjustments for the location of equipment shall be previously approved and detailed on the Record Drawings.

H. Right of Way shall be given to raceways and piping systems installed at a required slope.

I. All cables shall be labeled at both ends with vinyl cloth printed wire marker (Brady #PWM-PK-1). Label shall identify the room number where the speaker is located.

J. All cables shall be neatly bundled together and dressed in a terminal cabinet. Provide a maintenance loop behind punch blocks on a mounting bracket.

K. Conductors shall be terminated in the following orders:

1. West Penn #357: 1) Shield; 2) Black; 3) Red; 4) Green; 5) White

2. Superior Essex SEALPIC:
   a. Major: 1) White; 2) Red; 3) Black; 4) Yellow; 5) Violet
   b. Minor: 1) Blue; 2) Orange; 3) Green; 4) Brown; 5) Slate

3.02 EXISTING FACILITIES

A. Contractor shall expand and program existing headend equipment as required to accommodate new work shown. The exact requirements shall be coordinated with the district.

(next page)

3.03 TESTING

A. After installation of the intercommunication system the Contractor shall perform testing of the complete intercommunication system in the presence of the Commissioning agent and shall make adjustments to the pre-installation speaker tap settings to achieve the following performance results:

Area Type	Required Performance Results	Pre-installation Tap Setting
Classroom	75-80 dB	0.5-watts
Hallway	85-95 dB	2.5-watts
Large Rooms (Gymnasium, Cafeteria, MPR)	95-100 dB	7.0-watts
Outside (40-50 feet from speaker)	110-115 dB	15.0-watts
Restrooms	45-55 dB	0.25-watts

B. Performance results listed above shall be measured from the center of the area type for indoor spaces.

END OF SECTION

SECTION 281600 – INTRUSION DETECTION

PART 1 – GENERAL

1.01 APPLICABLE PUBLICATIONS:

A. The publications listed below form a part of this specification to the extent referenced. The publications are referred to the text by the basic designation only.

1. National Fire Protection Association (NFPA) Publication: 2019 California Electrical Code (CEC).
2. State of California: Title 19-California Code of Regulations Title 24-Building Standards.

1.02 RELATED WORK:

A. Section 260000 – Electrical.

1.03 SUBMITTALS AND TRAINING:

A. All submittals shall be made in accordance with Section 013300.

B. The Contractor shall provide two sets of system submittals and Shop Drawings for review and approval within 35 days after date of Award of the Contract. The submission shall consist of five major sections with each section separated with insertable index tabs. The first section shall be the index which shall include the project title and address, name of the firm submitting the proposal and name of the Architect/Engineer. Each page in the submission shall be numbered chronologically and shall be summarized in the index. The second section shall include a copy of the authorized distributor's valid C-7 California State Contractor's license, letter of factory authorization and guaranteed service, list of projects of equal scope and lists of proposed instrumentation to be used by the Contractor. The third section shall contain the comparative Specifications listing, including a complete listing of the characteristics of the equipment to be furnished. The fourth section shall contain an original factory data sheet for every piece of equipment in the Specifications. The fifth section shall contain a wiring designation schedule for each circuit leaving each piece of equipment.

C. Contractor System submittals and Shop Drawings shall include, but not be limited to, the following:

1. A complete list of equipment and materials proposed for the system with catalog cuts, technical data, manufacturer's Specifications and detail drawings.
2. A complete set of detailed scaled drawings of all racks and cabinets with all designations, dimensions, color, operating controls, instrument wiring and schematic diagrams of all circuits.
3. The power loads of the systems shall be calculated on separate sheets and shall be included in the submittal. Also, include a dimensional Shop Drawing of the unit nameplate. The nameplate shall contain school name, firm address, acceptance data and power load.

4. Drawings shall show interfaces to all equipment furnished or not by other contractors identifying numbers of wires, termination requirements, voltages and other pertinent details. Include front elevations, cabinet dimensions, types of mounting, door barriers, catalog number of locks and finishes of terminal cabinets.

D. Operating and Service Manuals: As-Built Record Drawings:

1. Deliver three copies of operating and servicing manuals. Each complete manual shall be bound in a flexible binder and all data shall be typewritten or drafted.
2. Each manual shall include all instructions necessary for the proper operation and servicing of the systems and shall include complete circuit diagrams of the systems, a wiring destination schedule for each circuit leaving the console and each rack, a schematic diagram of all components, and replacement part numbers. Each manual shall also include the as-built cable site plot drawing and floor plan drawings showing all equipment, devices, cables (both underground and in each building) with the conduit and the as-built coding used on each cable.

1.04 QUALITY ASSURANCE:

A. To qualify as a bidder, the manufacturer's representative shall hold a valid State of California C-7 or C-10 license; shall have completed at least 10 projects of equal scope; and shall be capable of being bonded to assure the District of performance and satisfactory service during the guarantee period.

B. All mechanical, electrical and general information set forth on the respective data sheets for each specified item shall be considered part of these Specifications and binding herein. Any proposed equal items offered shall be substantiated fully to prove equality. The District reserves the right to require a complete sample of any proposed equal item and may, if necessary, request a sample tested by an independent testing laboratory to prove equality. The decision of the District regarding equality of proposed equal items will be final.

C. All equipment and wiring shall be installed by individuals holding a "Voice Data Video Technician" certification from the State of California division of apprenticeship standards.

D. The Contractor shall furnish a letter from the manufacturer of the equipment, not furnished by the District, which certifies that the equipment has been installed according to factory recommended practices and that the system is operating satisfactorily. The Contractor shall also furnish a written unconditional guarantee, guaranteeing all parts and labor for a period of two years after final acceptance of the project by the District.

E. The Contractor shall provide not less than eight hours of instruction of personnel in the operation and maintenance of the systems. This instruction time shall be divided as directed by the District. Contact FUSD Electronics at 559-457-3093 to coordinate.

1.05 SCOPE OF WORK:

A. Furnish and install a complete Intrusion Detection / Access Control system with the performance criteria detailed in this specification. The system shall be inclusive of all necessary functions, monitoring, and control capability as detailed herein and on accompanying Shop drawings, which may includes, but not be limited to:

1. On-site or remote video monitoring
2. Heating, air conditioning, and lighting management
3. Temperature threshold detection and monitoring
4. Humidity threshold detection and monitoring
5. Pressure threshold detection and monitoring
6. Power loss detection and monitoring, generator switching
7. Leak detection and monitoring
8. Carbon Monoxide detection and monitoring
9. Tank level threshold detection and monitoring

B. This specification document provides the requirements for the installation, programming, and configuration of a complete Command Processor Panel. This system shall include, but not be limited to:

1. Control panel
2. System cabinet
3. Power supply
4. Digital Signaling Line Circuits (SLC)
5. Annunciator/keypad bus
6. Batteries
7. Wiring
8. Conduit
9. Associated peripheral devices

C. The DMP head end control panel shall be furnished by FUSD and installed and programmed by the Contractor (OFCI). See Part II, Section 2.11, below.

1.06 WARRANTY:

A. The entire system shall be guaranteed free of mechanical or electrical defects for a period of two years after final acceptance of the installations. Any material showing mechanical or electrical defects shall be replaced promptly at no expense to the District.

B. The Contractor shall provide a two-year guarantee of the installed systems against defects in material and workmanship. All labor and materials shall be provided at no expense to the District. Guarantee period shall begin from the date of final acceptance by the District.

PART 2 – PRODUCTS

2.01 DISTRICT STANDARDIZATION

A. The district has standardized by means of a board resolution pursuant to Public Contract Code, Article 4, Section 3400, certain equipment specified herein. Refer to FUSD Resolution 18-08 and exhibits for exact manufacturers and models which are to be sole sourced.

2.02 REFERENCES:

A. The system shall be listed as a Power Limited Device and be listed under the standards in this section. Each system shall be supplied with complete details on all installation criteria necessary to meet all of the listings.

B. Underwriters Laboratories (UL):

1. UL 365 Police Connect Burglar
2. UL 609 Local Burglar
3. UL 1023 Household Burglar Alarm System Units
4. UL 1076 Proprietary Burglar
5. UL 1610 Central Station Burglar Alarm Units
6. UL 1635 Digital Burglar Alarm Communicator System Units
7. UL 864 Control Units for Fire Protective Signaling Systems
8. UL 985 Household Fire Warning
9. UL 294 Access Control System Units

C. California Code of Regulations:

1.Title 24, Part 3 – 2019 California Electrical Code

D. National Fire Protection Association (NFPA):

1. NFPA 70 National Electric Code (NEC)
2. NFPA 72 Local Protective Signaling
3. NFPA 72 Remote Station Protective Signaling
4. NFPA 72 Proprietary Protective Signaling
5. NFPA 72 Household Fire Warning

E. U.S. Government Standards / Listings:

1. DCID 6/9
2. DoD/NIST SCIF Standards

2.03 SYSTEM DESCRIPTION:

A. General:

1. The system areas and zones shall be programmable, and the system shall store, log, display, and transmit specific custom designations for system areas, zones, and user names.
2. The system controller, user interfaces, zone input devices, relay output devices, and the system signal receiving equipment shall be engineered, manufactured, assembled, and must be distributed from a location within the United States of America.
3. The system shall support user interaction by way of a keypad, web browser, system software, key switch, or radio frequency wireless control, using integrated or auxiliary devices provided by the system manufacturer.
4. The system shall support controller zone input connections, system keypads, system zone expansion modules, and wireless zone input modules, and must support zone input connections by way of at least two competitive products. The system shall offer a seamless integrated compatibility with hard-wire and/ or wireless zone expansion equipment for at least 200 wireless zones and/ or a maximum of 574 hardwired zones.
5. The system shall be capable of offering at least five zone expansion buses, each of which can support the connection of up to 15,000 feet of four-wire cable. Zone expansion and keypad data buses that exceed 2,500 feet of cable must include splitter/repeater modules to boost data voltage and maintain data integrity.
6. The system shall provide a seamless capability to provide a minimum of 500 addressable relays, which can be located at any connection location upon a zone expansion bus.
7. System relay outputs shall have the capability of being triggered as a result of a command from the user interface, changes in system status, changes in zone status, or by a programmable schedule.
8. System relay output states shall be programmable for momentary, maintained, pulsed, or must follow the state of an associated system zone input.
9. The system shall be completely programmable either locally from a keypad or remotely through a standard dial-up, and network connections by way of a LAN, WAN, and/or by way of the Internet.
10. The control unit shall be completely programmable remotely using remote annunciators, and/ or using upload/ download software that communicates using SDLC 300 baud, 2400 baud, or IP Addressed data network. On-site programming from a personal computer shall also be permitted.

B. Input/Output Capacity:

1. This system shall be capable of monitoring a maximum of 574 individual zones and controlling a maximum of 502 output relays.
2. The control panel shall have, as an integral part of the assembly, 2 SPDT Form C relays rated at 1 Amp at 30 VDC and four open collector 12 VDC outputs rated at 50mA each. It shall also have the capacity of a maximum of 125 output expander

modules with 500 switched ground, open collector outputs, 50mA maximum and 502 auxiliary relays (Form C rated at 1.0 Amp at 30 VDC).

3. The panel shall also provide 100 programmable output schedules, and include an integral bell alarm circuit providing at least 1.5 Amps of steady, pulsed, or temporal bell output. Output type shall be programmable by zone type. Relays and voltage outputs shall be capable of being independently programmed to turn on and/or off at selected times each day.

C. User/Authorization Level Capacity:

1. The system shall be capable of operation by 10,000 unique Personal Identification Number (PIN) codes with each code having one (1) of ninety-nine (99) custom user profiles. This allows for limitation of certain functions to authorized users. The operation of all keypads shall be limited to authorized users.

D. Keypads:

1. The system shall support a maximum of sixteen (16) keypads with alphanumeric display. Each keypad shall be capable of arming and disarming any system area based on a pass code or Proximity key authorization. The keypad alphanumeric display shall provide complete prompt messages during all stages of operation and system programming and display all relevant operating and test data.
2. Communication between the control panel and all keypads and zone expanders shall be multiplexed over a non-shielded multi-conductor cable, as recommended by the manufacturer. This cable shall also provide the power to all keypads, zone expanders, output expanders, and other power consuming detection devices.
3. If at any time a keypad does not detect polling, the alphanumeric display shall indicate "SYSTEM TROUBLE". If at any time two devices are programmed for the same address, the alphanumeric keypad shall display “4 WIRE BUS TROUBLE”. If at any time a keypad detects polling but not for its particular address, the alphanumeric display shall indicate "NON POLLED ADDR". The system shall display all system troubles at selected keypads with distinct alphanumeric messages.
4. The keypad shall include self-test diagnostics enabling the installer to test all keypad functions: display test, key test, zone test, LED test, relay test, tone test, and address test.
5. The keypad shall provide an easy-to-read English text display. The text shall exactly match the text seen in all software reports, keypad displays, and central station reports.
6. The keypad user interface shall be a simple-to-use, menu-driven help system that is completely user friendly.
7. The control panel shall support a keypad interface accessible on the World Wide Web in a browser window. The web-accessible keypad interface shall provide at least five (5) programmable hyperlinks for camera access or other use.
8. The system shall support sub-control keypads with four (4) built-in zones and capable of functioning in the following modes:

a) Panel monitors all four (4) keypad zones independently with a maximum of 125 keypads attached to the control panel.
b) Panel assigns one (1) zone to each keypad and monitors all keypad zones as a single zone with a maximum of 500 keypads attached to the control panel.
c) Stand-alone mode allowing keypad to operate as a self-contained security system independent of the control panel.

E. Zone Configuration:

1. A minimum of 4 Class B ungrounded zones shall be available at each keypad or zone expander on the system. The system shall have the capacity for a maximum of sixteen (16) keypads and a maximum of 125 four (4) zone expanders or 500 single zone expanders. It shall also have the capacity of a maximum of 125 supervised relay output expanders. All Class B zones shall be 2-wire, 22 AWG minimum, supervised by an end-of-line (EOL) device and shall be able to detect open and short conditions in excess of 500ms duration.
2. Each zone shall function in any of the following configurations: Night, Day, Exit, Fire, Supervisory, Emergency, Panic, Auxiliary 1, Auxiliary 2, Fire Verification, Cross Zone, Priority, and Key Switch Arming.
3. The digital SLCs and the annunciator/keypad bus shall be able to operate at a maximum wiring distance of 2500 feet from the control panel on unshielded, non-twisted cable. This distance may be extended to a total of 15,000 feet when bus repeater modules are installed.
4. The system shall have the capability to incorporate up to 200 zone expander POPIT™ points.
5. Each zone shall function in any of the following configurations:
   a) Night
   b) Day
   c) Exit
   d) Fire
   e) Supervisory
   f) Emergency
   g) Panic
   h) Auxilary 1
   i) Auxilary 2
   j) Fire Verification
   k) Cross-Zone
   l) Priority
   m) Arming

F. Communication:

1. The system shall be capable of signaling to as many as 8 remote monitoring station receivers. Seven (7) of the eight (8) paths shall be capable of being assigned as either a “primary” or “backup” path. In such a manor the system shall have multiple

primary paths to multiple remote monitoring stations as well as multiple backup paths to multiple monitoring stations.

2. The system shall be capable of signaling to two remote monitoring station receivers, four telephone numbers of 32 digits each using two separate switched telephone network lines such that if two unsuccessful attempts are made on the first line to the first number, the system shall make two attempts on first line to the second number. If these two attempts are unsuccessful, the system shall make two further attempts on the first line of the first number. After the tenth unsuccessful attempt, dialing shall stop and the alphanumeric keypad shall display trouble. Should another event occur that requires a report to be transmitted, the dialing sequence shall be repeated. The system shall have a programmable option to dial a second set of telephone numbers after the first ten attempts using the same sequence.
3. The system shall be capable of communication using the IBM Synchronous Data Link Control format, and at least two other standard industry formats.
4. The system shall be capable of supporting Network communication with digital dialer backup, existing Ethernet data networks, satellite communication, fiber optic networks, local area networks, wide area networks, cellular communication, and retail data networks.

G. Network Communication:

1. The control panel shall be capable of asynchronous network communication with a retry time between 3 and 15 seconds for a total of one (1) minute. If communication is unsuccessful the control panel shall be capable of attempting backup communication through any of the available communication methods to the same receiver or a backup receiver.
2. The control panel shall employee adaptive communication technology. Adaptive Technology allows a Backup communication path programmed to use Network or Cellular to automatically ADAPT to the faster check-in rate of the Primary path should the Primary path become unavailable, creating a seamless transition for communication of messages. Select Adapt when programming the Checkin option. This allows a system to be fully supervised even if a path fails, while also keeping wireless charges low when the network is good.
3. Network communication between the control panel and the receiver shall be in a proprietary communication format.
4. The control panel shall be capable of supporting Dynamic Host Communication Protocol (DHCP) Internet Protocol (IP) addressing.
5. Underwriters Laboratories (UL) shall list network communication by the control panel for Grade AA High-Line Security.
6. The control panel shall be capable of two-way network communication using standard Ethernet 10BaseT in a LAN, WAN, or Internet configuration.
7. The control panel shall be capable of communication by means of a 128 Bit AES Rijndael Encryption process certified by NIST (National Institute of Standards and Technology) to an SCS-1R receiver with a built-in Encryption Alarm Router.

8. The control panel shall be capable of meeting DCID 6/9 and UL 2050 standards.

H. TCP/IP Network Trapping:

1. The control panel shall be capable of having communication set to Network operation. When a trap is set in Remote Link, the software shall be capable of sending a panel trap message with the panel account number to the SCS-101 installed in an SCS-1R receiver.
2. The receiver SCS-101 shall store the trap and monitor the panel for the next message. When the panel sends its next message, the receiver SCS-101 shall then send a message to the panel to contact Remote Link at the IP address contained in the original trap message.
3. The trap message shall be stored in the receiver SCS-101 for up to four hours. If the trap message is not sent to the panel within the four-hour window, the panel trap message shall be discarded and a new trap message must be sent from Remote Link.
4. The user shall be able to view the trap status in the receiver SCS-101 in Remote Link using the Trap Query function.

2.03 MANUFACTURER

A. Digital Monitoring Products, Incorporated (DMP)
2500 N. Partnership Boulevard, Springfield, MO 65803
Phone (417) 831-9362. FAX (417) 831-1325. Website: www.dmp.com

2.04 MAIN SYSTEM COMPONENTS, no substitution.

A. Main Panel

1. DMP, XR550DNL-G (or current, full featured model of the XR550), 500 point panel, with gray cabinet.

B. Expansion Panel

1. DMP, XR550DNL-G, 500 point panel, with gray cabinet,
or,
DMP, XR-150DNL-G, 100 point panel, with gray cabinet, as appropriate

C. Software

1. DMP, Entre Security Management Software

D. Alternate Cabinets

1. DMP, 340-R, Red Cabinet
2. DMP, 340-G, Gray Cabinet

E. Keypads

1.DMP, 7060A-W, Keypad

2.DMP, 7063A-W, Keypad with Reader

3.DMP, 7872-B, Touch Keypad with Reader

F. Zone Modules

1.DMP, 710 Bus Splitter Module

2.DMP, 711, Single Point Addressable Module

3.DMP, 714-18T, Four Point Addressable Module

4.DMP, 714-08-G, Eight Point Addressable Module

5.DMP, 714-16-G, Sixteen Point Addressable Module

G. Relay Modules

1.DMP, 716, Four Point Addressable Relay Module

2.DMP, 714-8-R, Eight Point Addressable Relay Module

3.DMP, 714-16-R, Sixteen Point Addressable Relay Module

H. Interface Modules

1.DMP, 734, Wiegand Module

I. Proximity Readers

1.DMP, PR-6005B, Proximity Reader, Small

2.DMP, PR-5455, Proximity Reader, Medium

2.05 COMPONENT REQUIREMENTS

A. Component Enclosure:

1. Housings; power supply enclosures, terminal cabinets, control units, and other component housings, collectively referred to as enclosures shall be so formed and assembled as to be sturdy and rigid. If sheet steel is used in the fabrication of enclosures, it shall be not less than an 18 gauge door with a 20 gauge box frame. Where exposed pins, the hinges shall be of the tight pin type or the ends of hinge pins shall be tack welded to prevent ready removal. Doors having a latch edge length of less than 24 inches shall be provided with a single lock. Where the hinged door latch

edge is 24 inches or more in length, doors shall be provided with three-point latching device with lock; or alternatively with two locks, one located near each end. For SCIF and High Security applications an attack proof enclosure with proper tampers UL listed for use with the control panel shall be used.

B. Electronic Components

1. All system electronic components shall be solid-state type, mounted on printed circuit boards. Light duty relays and similar switching devices shall be solid-state type or electromechanical.

2. The panel shall have an over current notification LED that lights when devices connected to the Keypad Bus and LX-Bus(es) draw more current than the panel is rated for. When the over current LED lights, the LX-Bus (es) and Keypad bus are shut down.

C. Control Unit:

1. A battery test shall be automatically performed to test the integrity of the standby battery. The test shall disconnect the standby battery from the charging circuit and place a load on the battery. This test shall be performed no more than every 180 seconds.

2. The control unit shall be capable of operating and supervising notification appliance devices as well as addressable initiating detection devices and an integrated supervised dual line digital communicator.

3. Control unit must be “Flash ROM” updatable, and program must be held in non-volatile RAM. The panel shall be able to function while the update is in process.

4. Control unit shall be capable of operating using an optional built in Encrypted Alarm Router for SCIF (Sensitive Compartmented Information Facility) applications that is certified by NIST (National Institute of Standards and Technology) for 128 Bit AES Rijndael Encryption communications.

5. The optional built-in Encrypted Alarm Router shall be capable of compliance with DCID 6/9 and UL 2050 standards.

D. Remote Annunciators:

1. The system shall support a maximum of sixteen (16) supervised remote annunciators with the identical capabilities, functions and display layout. Operation of the remote annunciators shall be limited to authorized users by the use of a code or key.
2. The remote annunciators shall be capable of operating at a maximum wiring distance of 15,000 feet from the control unit on unshielded, non-twisted cable.

E. Control Designations:

1. Controls shall be provided to ensure ease of operation of all specified characteristics. Where applicable, clockwise rotation of controls shall result in an increasing function. Controls, switches, visual signals and indicating devices, input and output connectors, terminals and test points shall be clearly marked or labeled on the hardware to permit quick identification of intended use and location.

F. Test Modes:

1. The system shall include a provision that permits testing from any alphanumeric keypad. The test shall include standby battery, alarm bell or siren, and communication to the central station.

2. The system shall include a provision for an automatic, daily, weekly, thirty (30) day, or up to sixty (60) day communication link test from the control panel installation site to the central station.

3. The system shall include a provision for displaying the internal system power and wiring conditions. Internal monitors shall include the bell circuit, AC power, battery voltage level, charging voltage, panel box tamper, phone trouble line 1, phone trouble line 2, transmit trouble, and network trouble.

G. Serial Interface:

1. The control panel shall be capable of a serial interface to output information to a standard serial printer or serial interface to a communication port on a standard computer. Through control panel programming the system shall include a provision to allow the selection of which reports are to be output.

H. Power Supplies:

1. Power supplies for the control unit shall operate from 120 VAC, supplied at the respective protected areas. Standby batteries shall be supplied to power the system in the event of a utility power failure. Batteries shall be sized to provide 105% capacity for eight hours. Standby batteries shall be sealed lead-acid. Power supplies shall be all Solid State.

2. Controls shall be designed to maintain full battery charge when alternating current is available. Batteries shall be recharged to 85% capacity within 24 hours from battery use. The system shall be automatically transferred to battery power upon loss of alternating current power and return to alternating current power upon restoration. Intrusion alarms shall not be initiated during switch over; a signal shall be initiated upon failure of battery or alternating current power.

3. Approved power supplies shall meet or exceed the following power supply model specifications:

   a) UL Listed DMP 505-12: 12VDC, 5 amp with transformer and enclosure.

I. Software:

1. The system shall interface with computer software with the capability to fully program the panel by connecting to the panel through:

   a) Direct cable connection interface card
   b) Receiver phone line connection
   c) Standard phone line connection
   d) Ethernet network connection
   e) Network connection across the Internet

2. The system shall interface with computer software capable of locking down all controlled doors.

3. The system shall interface with computer software capable of monitoring and logging all events.

4. The system shall interface with computer software capable of exporting reports in the following file formats:

   a) Excel spreadsheet (*.xls)
   b) Rich Text (*.rtf)
   c) Text (*.txt)
   d) Windows Metafile (*.wmf)
   e) Comma-separated (*.csv)
   f) HTML document (*.htm)
   g) QuickReport (*.qrp)

5. The system shall interface with computer software capable of printing custom, filtered reports including:

   a) All Events
   b) Zone Action
   c) Arming/Disarming
   d) Area Late to Close
   e) User Code Changes
   f) Door Access Granted
   g) Door Access Denied
   h) Opening/Closing Schedule Changes
   i) System Monitors
   j) System Events

J. Control Panel Capability:

1. The basic control panel shall provide:

   a) Expansion to a total of at least 10,000 user codes with 99 user profile definitions.
   b) Sixteen (16) independent door/keypad addresses, each with four zones.
   c) Twenty (20) Holiday Dates for custom holiday scheduling by area.
   d) A total door access granted event buffer of at least 10,000 events.
   e) Anti-passback access control selectable by area and user.
   f) Four (4) shift schedules per area.
   g) A total of at least 100 programmable output relay schedules.
   h) Thirty-two (32) individual reporting areas.
   i) Built-in bell and telephone line supervision.

2. The networked control panel shall provide:

   a) All of the above features.
   b) Require two-man access code or credentials.
   c) Support programming to require the same or different access code entered within a programmed delay time of 1 to 15 minutes after disarming before activating a silent ambush alarm.
   d) Support area programming that disables schedule and time-of-day changes while system is armed so that area can only be disarmed during scheduled times.

3. The encrypted control panel shall provide:

   a) All of the basic and network features listed above.
   b) Built-in Encrypted Alarm Router.
   c) Certified operation that meets 128 Bit AES Rijndael Encryption communications.
   d) Certified operation that meets SCIF (Sensitive Compartmented Information Facility) application needs.
   e) Certified operation that meets NIST (National Institute of Standards and Technology) standards.
   f) Certification that encrypted panel is capable of meeting DCID 6/9 standards.
   g) Certification that encrypted panel is capable of meeting UL 2050 standards.

2.06 INTEGRATED INTRUSION ALARM AND ACCESS CONTROL OPERATION

A. Access Authority Levels:

1. The system shall be capable of programming access credentials authority levels to check whether the user has access to a specific area and also has the authority to disarm or arm the area. If the user access credential has access and disarm/arm authority the system shall provide the user the option to disarm the area

simultaneously upon opening the door, or to open the door and begin an entry delay timer. With the timer option the user then disarms the area using an intrusion control keypad inside the area. If the user only has access authority to the area and the area is in an armed condition, the user is denied access to the area.

B. Door Open Schedule Override:

1. The system shall be capable of programming certain area doors to be scheduled to unlock and lock at specific times of the day or night. The lock/unlock function shall be capable of an override option depending upon the area armed/disarmed status. If the area remains in an armed status at the scheduled unlock time the armed status overrides the unlock schedule ensuring the doors remain locked and armed in situations where the business might open late, close early, is affected by inclement weather, or another emergency.

C. Common Area:

1. The system shall be capable of programming a common area to be armed when the last area in the system is armed and disarmed when the first area in the system is disarmed. To ensure the common area works properly it shall not have any user codes assigned to the common area. The system shall also be capable of programming multiple common areas.

D. Early Morning Ambush:

1. The system shall be capable of programming an area to require two user codes be entered within a programmed number of minutes to prevent an ambush message from being sent to the Central Station Receiver. If both user codes are not entered within the time an ambush message is sent to the central station receiver.

2. Both user codes shall have the authority to disarm the specific area and must be entered at the same keypad or reader. The keypad shall not display any indication that the ambush timer is running.

3. The system shall be capable of programming an output to provide an external indicator that an ambush situation is taking place.

E. Two-Man Rule:

1. The system shall be capable of programming an area to require two separate user codes be entered in order to disarm and/or allow access to a specific area. Both required codes shall have at least the same or greater authority level. Both required codes shall be entered within 30 seconds or an alarm shall activate.

F. Panic Button Summary Test:

1. The system shall have the ability to test panic buttons without sending a panic alarm to the Central Station Receiver.

2. The system shall also have the ability to send panic zone test verification and failure results to the Central Station Receiver.

3. During the test, each time a panic zone trips, the display number shall increment and the keypad buzzer sound for two seconds.

4. The number of panic zones tripped shall constantly display until the test ends or no panic zone activity has occurred for 20 minutes.

5. When the Panic Zone Test ends and a zone failed (did not trip) during the test, the keypad shall be able to display the zone name and number and have the buzzer sounds for one second. Additional zone failed zones shall display when a button is pressed.

2.07 FALSE ALARM REDUCTION FEATURES

A. The system shall be capable of providing false alarm reduction features, functions, capabilities, or processes that either require alarms be verified or potential alarms be corrected before a system or zone can be placed into an armed state.

B. Exit Error Alert and Reporting:

1. The panel shall be able to provide an automatic function to prevent a false alarm from occurring if an exit door does not properly close after the system is armed.

C. Entry and Exit Delay Annunciation:

1. When arming, the system shall provide clear annunciation indicators to the user about the need to exit the premises prior to the exit delay time expiring.

2. When disarming, the system shall notify the user the need to disarm the system prior to the entry delay time expiring.

D. Remote Annunciation:

1. The system shall be able to provide entry and exit delay time period notification. This notification can be from DMP keypads, remote annunciators, or bell tests.

E. Abort Reporting:

1. The system shall be capable of sending an Abort report to the central station if the system is disarmed while the alarm is still sounding. The Abort report shall be sent after the alarm report to notify the central station that an authorized user has cancelled the alarm.

F. System Testing:

1. The system shall offer testing features that are simple, quick, and complete and provide the highest measure of safety by ensuring that alarm conditions are detected and communicated to the proper authorities in a timely manner and on a regularly scheduled basis.

G. Ambush Code:

1. The system shall offer ambush codes for those dangerous encounters where the user is instructed to either arm or disarm the system under threat of harm. The duress code shall disarm the system without giving local indication of an alarm that might put the user well-being in jeopardy.

H. Two-Button Panic Feature:

1. The system shall support DMP keypads that provide the option to use only two-button panic codes. The user shall be required to press and hold two designated keys for approximately two seconds before the system generates a panic alarm.

J. Fire Verify Zones:

1. The system shall support Fire Verify zones to help the panel verify the existence of an actual fire condition before it sends an alarm report to the central station. The Fire Verify zone shall require the panel to perform a Sensor Reset whenever a device connected to a Fire Verify zone initiates an alarm. This shall begin a verification period during which the panel waits for a second alarm initiation. If the original zone or any other Fire Verify zone on the panel initiates an alarm within the next 120 seconds, the panel shall recognize this as an actual alarm and send an alarm report to the central station.

K. Cross-Zoning Protection:

1. The system shall support cross-zoning as a means of requiring two device trips to occur within a short period of time before sounding an alarm and sending an alarm report to the central station. Supported device trips shall be from one device that trips two times, or from two devices that each trip once.

L. Swinger Zone Bypassing:

1. The system shall be capable of automatically bypassing a zone if it goes into an alarm or trouble condition a specified number of times within a one-hour period. The panel shall be able to track the number of times the zone trips while armed and compare that against a programmed number. When that number is reached, the panel shall be able to automatically bypass the zone. The panel shall be capable of resetting the zone when the area to which it is assigned disarms, is manually reset from the keypad or remotely, or remains normal for one hour.

M. Recently Armed Report:

1. The system shall be capable sending a System Recently Armed report, along with a zone alarm report, to the central station any time an alarm occurs within five minutes of the system arming. The System Recently Armed report allows the central station operator to follow a "call the subscriber first" procedure instead of immediately dispatching the police to what could be a false alarm.

N. Transmit Delay:

1. The system shall be capable of programming the panel to wait up to 60 seconds before sending burglary alarm reports to the central station. If an alarm is accidental, the user shall be able to disarm the system within the programmed Transmit Delay time. An Abort report shall be sent in place of an alarm report after the system disarms. During the alarm, sirens and panel relay outputs shall not be delayed and shall still provide local condition annunciation.

O. Call Waiting Cancel:

1. The system shall be capable of being programmed to cancel call waiting any time the panel dials the receiver number to send a report.

P. Cancel/Verify:

1. The system shall be capable of sending either a Cancel Report or Verify Report to the Central Station to signify that the end user has Canceled an Alarm or Verified an Alarm condition.

2.08 BURGLARY CONTROL

A. Area System:

1. The system user shall be capable of selectively arming and disarming any one or more of 32 areas within the intrusion detection system based on the user PIN code and/or keypad used. Each of the 574 zones shall be able to be assigned to any of the 32 available areas. The system shall be capable of having up to a sixteen (16) character length name programmed for each area.

2. The system user shall be capable of assigning an opening and closing schedule to all areas or to each of the 32 areas separately. Each area shall be able to arm or disarm automatically by a schedule. The system shall have the capacity for common areas that automatically disarm when any other area disarms and that automatically arm when all others areas arm.

3. The networked system shall have the ability to comply with Bank Safe & Vault application. The networked system shall also have the ability to use a two-man rule for disarming or allowing door access to an area. The system shall have the ability to operate a Common Area application.

B. Zones:

1. The system shall have a minimum of eight (8) grounded burglary zones available from the control panel.

C. Burglary Equipment:

1. Burglary detection equipment shall communicate to the system by way of the control panel loop expansion bus or 900MHz receiver.

2.09 ACCESS CONTROL

A. Keypad:

1. The system shall display a message at any keypad when any system area remains disarmed past the scheduled closing time. The message shall be displayed at one minute past the scheduled closing time. A pre-warn tone shall also begin sounding. If the system is not armed or a schedule extended within ten minutes past the scheduled closing time, the system shall provide the option of sending a Late To Close report to the central station.

2. The keypad shall include a door strike relay capable of sending a report to the central station when activated.

3. The keypad shall be capable of proximity arming and disarming functions.

B. Area Access Control:

1. The system shall be capable of integrating area access control capability where specified into the same control panel with the ability to have up to 10,000 user credentials. User access is limited to custom profiles and/or schedules. Anti-passback shall be available. The networked version shall support a Two-Man Rule feature. The system shall support up to sixteen (16) access doors, connected to the system using a manufacturer-approved interface module.

C. Access Control Equipment:

1. Access Control equipment shall communicate to the system by way of the control panel keypad bus.

2.10 COMPILED DETECTION EQUIPMENT LISTING

A. Hard-wired:

1. Hard-wired detection equipment shall communicate to the system by way of the control panel loop expansion bus. The equipment shall have a three (3) year warranty as stated in the current DMP Product Catalog and meet or exceed features offered in the following products:

a. Motion Detector – Optex Model RX-40PI (Wall Mount 40’x40’)
b. Motion Detector – Optex Model CX-702 (Wall Mount 70’x70’ or 150’x8’)
c. Motion Detector – Optex Model KX-08 (360 Ceiling Mount)
d. Motion Detector – Optex Model SX-360Z (360 Ceiling Mount Long Range up to 16’ Ceilings)
e. Glass Break Detector – Honeywell Model FG-1625
f. Door Contact – GE 1078C-N Recessed Contact
g. Door Contact – GE 1038T Surface Mount Contact
h. Zone Expansion Module – DMP Model 714-18T
i. Bus Splitter/Repeater Module – DMP Model 710
j. Output Expansion Module - DMP Model 716
k. Graphic Annunciator Module - DMP Model 717

B. Power Supplies and Transformers:

1. Power supply, transformer, and battery devices shall maintain system operation. The batteries shall be checked and replaced every three to five years. The equipment shall have a three (3) year warranty as stated in the current DMP Product Catalog and meet or exceed features offered in the following products:

a. Transformer - DMP Model 322, 16.5 VAC 56 VA, Wire-in

C. Access Control Equipment:

1. Access control equipment shall provide access control functions between the panel and controller door access points. The equipment shall have a three (3) year warranty as stated in the current DMP Product Catalog.

PART 3 – EXECUTION

3.01 INSTALLATION

A. Integration with Access & Security Management Software:

1. Provide all licensing, modules, programming, configuration, graphical backgrounds, etc. as required to integrate with the District's WAN access & security management software and support all utilized features.
2. Provide any available software updates to the access & security management software.

B. Each intrusion device (door/window magnetic switch, glass break sensor, motion sensor, etc.) shall be connected to a dedicated zone. Provide zone expansion modules as needed.

C. Provide all programming and interface with existing intrusion system and monitoring system.

D. Provide detailed as-builts to the owner in electronic format on a USB stick.

E. Labeling:

1. All wires to be wiretagged labeled at each end of cable
2. All devices to have programmed address on 3/8” (black on white) sticky back label on front of device.

3.02 As-Built Drawings:

A. Before project will be accepted, the contractor will provide as-built drawings.

B. Drawings shall be three (3) hard copies in size “B” (11 x 17) format.

C. Finalized form shall also be submitted electronically on an USB V3.0 stick drive in three (3) formats: (1) AutoCAD 2013, (2) PDF, and (3) WebGate Control Center Professional (4.x), and in three (3) hard copies sized “B” (11 x 17).

D. Maps shall show only one level per page of sites that have multiple levels.

E. Maps shall indicate locations of system panels, devices, zone modules, addresses, and wiring.

F. Addresses will be clearly labeled and correspond to labeling in programming.

END OF SECTION

SECTION 28 20 00 – ELECTRONIC SURVEILLANCE

PART 1 – GENERAL

1.01 DESCRIPTION:

A. This specification describes the design, installation, testing, and documentation of all necessary elements required to install an HDcctv HD-SDI Security Camera System.

B. The Security Camera System shall consist of HDcctv HD-SDI DVRs and Video Redistribution Servers, which will be monitored 24 hours a day at a remote Central Monitoring Station within FUSD.

C. All camera activity will be recorded via HDcctv HD-SDI Digital Video Recorder (DVR) on-site.

D. All camera control and viewing shall be accessible via the Districts existing data infrastructure.

E. All proposed HDcctv HD-SDI Equipment and Software shall be compatible and interoperable with FUSD existing HDcctv HD-SDI Equipment and Software currently used by FUSD Central Monitoring Station.

F. The proposed HDcctv HD-SDI Security Camera System shall have no recurring costs for software or hardware licensing or other fees.

G. All HDcctv HD-SDI DVRs shall be certified by the Manufacture of the CMS Central Monitoring Software and Site Video Distribution Software to be compatible and supported with current versions of the Manufacture's Software.

H. The FUSD Central Monitoring Station currently uses the Webgate WinRDS Professional CMS Central Monitoring Software.

I. The Site Video Distribution Software currently uses the Webgate WinRDS Server Software.

1.02 RELATED WORK:

1. Section 260000 – Electrical

2. Section 272000 – Data Communications

3. Section 280500 – Basic Electronic Safety and Security System Requirements

1.03 SCOPE OF WORK:

A. The Contractor shall configure the system as described and shown.

B. Include all labor, material, and equipment for installation of Security Camera System cabling, cabling pathways, and pan/tilt/zoom power feeds.

C. Contractor shall provide all equipment, labor, supervision, tooling, miscellaneous mounting hardware, consumables, HDcctv HD-SDI Security Camera System cabling, cabling pathways, RS-485 Serial Data cable, and pan/tilt/zoom power feeds and any other necessary items even if not listed in these specifications.

D. Cabling, cabling pathways, and power feeds will be routed in such a way to provide HDcctv HD-SDI cameras and HDcctv HD-SDI camera equipment connectivity while minimizing the visual impact on the school's structure both interior and exterior.

E. FUSD will approve all locations where the HDcctv HD-SDI camera equipment is to be mounted and the corresponding termination point prior to work commencing.

F. This may include locations such as the main office, hallway common areas and targeted high-risk areas.

G. The exact position and placement of HDcctv HD-SDI Cameras, and HDcctv HD-SDI DVRs shall be determined by Site conditions, as designated by FUSD Representative.

H. Final numbers will be determined by Site needs and other considerations as designated by FUSD Representative.

I. Shall include HDcctv HD-SDI Cameras and HD Spot Monitors for Main Office Areas.

J. Interconnection of all HDcctv HD-SDI Cameras and HDcctv HD-SDI DVRs shall be by Coaxial Cable or Fiber Optical Cable as described in these Specifications, and as Site Conditions determined by designated FUSD Representative require.

K. Salvage, inventory, and return existing Site Security Camera Systems to FUSD.

L. Existing Coaxial Cabling shall not be reused for the new Security Camera System.

1.04 SUBMITTALS:

A. General:

1. Submit the following per Conditions of the Contract and Division Specifications.

a. Product Data:

i. Manufacturer's literature and specifications for each component of the system.

b. Site Survey:

i. Site Survey shall have complete plot plans of area.
ii. Internal areas shall be identified on separate sheets.
iii. All camera, power supplies, Security Enclosures, HDcctv HD-SDI DVRs, Servers, and related equipment locations shall be clearly identified.
iv. All camera view area zones shall be clearly identified.
v. HDcctv HD-SDI DVR installation location shall be clearly identified.
vi. All MDF/IDF cabinets used to connect system shall be clearly identified.
vii. Any additional relevant information shall be included.

c. All Site Surveys shall be bound and supplied as follows:

i. Two (2) hard copies in size "B" (11" x 17") format.
ii. Two (2) hard copies in size "D" (30" x 42") format.
iii. One (1) electronic storage media (USB V3.0 stick) with one (1) version each in AutoCAD Lite, PDF, and WebGate Control Center Professional (4.x).
iv. Larger drawings shall be rolled and secured in storage carriers.

d. Shop Drawings:

i. System diagram showing location of all devices.
ii. Provide complete design calculations showing signal losses, signal gain settings, equipment settings, equipment locations, and related items.
iii. Provide complete system diagram showing selection of all devices.
iv. Provide all system diagrams in standard industry format.

2. Contractor shall submit for approval by FUSD the make, model, and performance specifications of all test equipment to be used in adjusting and certifying system parameters.

3. Contractor shall submit for FUSD approval the proposed test set-up and procedure for adjusting and checking system performance.

1.05 QUALITY ASSURANCE:

A. Contractor shall have successful experience in executing projects of this type and scope.

1. Submit with Bid, a list of projects to provide proof of required experience, including the following:

a. Description of project.

b. Name, address and phone number of Owner.

c. Name and phone number of Owner's contact person having knowledge of the project.

d. Approximate cost of the data cabling and associated electrical work for the project.

2. The Proposal shall include a list of all workmen the contractor proposes to use for the data-cabling portion of this project.

3. This list shall include:

a. Name of worker.

b. Worker's resume showing training and experience.

c. List of contact persons and their telephone numbers.

4. Each worker proposed for work in the cabling portion of this work shall present a Certificate of Completion of Training in Fiber Optic and Security Camera Systems.

a. Only workers with experience in Fiber Optic installation may perform work in that area.

b. Only workers with experience in Security Camera Systems may perform work in that area.

5. The District Inspector or Project Manager may ask any or all workers to demonstrate their skill level before performing any work or continuing work.

6. If, in the opinion of the District, any worker is found to be deficient in this area, the Contractor must immediately provide necessary training to remove the deficiency or replace the worker with one having the required skills.

7. The Contractor shall use adequate numbers of skilled workmen who are thoroughly trained and experienced on the necessary crafts and completely familiar with the specified requirements and methods needed for the proper performance of the work.

8. The Contractor must provide a Project Manager who has demonstrated the ability to supervise an HDcctv HD-SDI Security Camera project.

9. The Project Manager must be available to be interviewed by FUSD and/or their representative and must be deemed acceptable by FUSD and/or their representative.

10. Acceptance will not be unreasonably withheld.

11. The Project Manager must be available to attend meetings as required.

12. The work of this section shall conform to California Code of Regulations, Part 3, and all other applicable codes and standards.

13. Only a qualified Contractor holding licenses required by legally constituted authorities having jurisdiction over the work shall do work.

14. Contractor shall have completed similar projects of equal scope to systems described herein and shall have been engaged in business of supplying and installing specified type of systems for at least five years.

15. Use equipment manufacturers certified contractors.

16. Manufacturer shall warranty availability of spare parts common to proposed system for a period no less than that stipulated within the California Multiple Award Schedule (CMAS) terms and conditions.

17. If no time period is contractually stipulated, the Contractor shall provide a warranty of five years.

18. Contractor shall warranty that all work executed and materials furnished shall be free from defects of material and workmanship for a period of five years from acceptance date of Contract Completion, excluding specific items of work that require a warranty of a greater period as set forth in this Specification.

19. Immediately upon receipt of written notice from the District, the Contractor shall repair or replace, at no expense to the District, any defective material or work that may be discovered before final acceptance of work or within warranty period; any material or work damaged thereby; and adjacent material or work that may be displaced in repair or replacement.

20. Examination of or failure to examine work by the District shall not relieve Contractor from these obligations.

21. Contractor shall have a service organization capable of responding to warranty service requests within 24 hours of receipt of written notification and resolution within five working days.

22. If Contractor fails to repair or replace material or work indicated above within 15 days of receiving written notice, the District, with its own personnel or by Contract, may proceed with repair or replacement and assess cost against Contractor, if Contractor does not respond accordingly.

23. Persons skilled in trade represented by work, and in accordance with all applicable building codes, shall install system in accordance with best trade practice.

24. Contractor shall include in the Material List Submission copies of the manufacturer's certifications that the Contractor is an authorized distributor of the submitted manufacturers' products and has been adequately trained in the installation of those products.

25. This applies to all fiber optic components and fiber optic cable.

26. Contractor shall include in the Material List Submission a list of five projects of similar scope acceptable to the District and shall have a service organization capable of responding to warranty service requests within 24 hours of receipt of written notification and resolution within five working days.

27. Contractor shall include the telephone number of the customer's client contact for each project and a letter signed by a corporate officer, partner, or Owner of the contracting company describing the service capability of the company and stating the company's commitment to maintain that service capability through the warranty period.

B. All work and materials shall be in full accordance with the latest rules and regulations of the following codes, industry standards and references:

1. State of California:

   a. Title 24, Building Standards, State of California.

   b. Occupational Safety and Health Act (OSHA).

   c. Title 8, Electrical Safety, State of California.

   d. Title 19, California Code of Regulations.

2. Telecommunications Industry Association/Electronics Industry Association (TIA/EIA).

   a. ANSI/TIA/EIA-STD-RS455, Standard Test Procedures for Fiber Optic Fibers, Transducers, Connecting and Terminating Devices (latest issue).

   b. Telecommunications Industry Association/Electronic Industry Association (TIA/EIA) Standard 569, Commercial Building Standard for Telecommunications Pathways and Spaces (latest issue).

3. BICSI-Telecommunications Distribution Methods Manual, Volumes #1 and 2 (latest issue).

4. Underwriters Laboratories Inc. (UL): Applicable listings and ratings.

5. UL LAN Cable Certification Level 5.

6. National Electric Code (Articles 770, 800, latest issue).

7. National, State, and Local Occupational Safety and Health Administration (OSHA) building and fire codes.

8. ANSI/TIA/EIA Telecommunications Building Wiring Standards.

9. ANSI/TIA/EIA-568-A, Commercial Building Telecommunications Cabling Standard (latest issue).

10. ANSI/TIA/EIA-568-B-3, Optical Fiber Cabling Components Standard (latest issue).

12. ANSI/TIA/EIA-569-A, Commercial Building Standard for Telecommunications Pathways and Spaces (latest issue).

13. ANSI/TIA/EIA-569-A-1, Commercial Building Standard for Telecommunications Pathways and Spaces Addendum 1 - Surface Raceways (latest issue).

14. ANSI/EIA/TIA-598-A, Optical Fiber Cable Color Coding (latest issue).

15. ANSI/TIA/EIA-606, The Administration Standard for the Telecommunications Infrastructure of Commercial Building (latest issue).

16. ANSI/TIA/EIA-607, Commercial Building Grounding and Bonding Requirements for Telecommunications (latest issue).

17. ANSI/TIA/EIA-758, Customer-Owned Outside Plant Telecommunications Cabling Standard (latest issue).

18. ANSI/TIA/EIA-758-1, Addendum No. 1 to TIA/EIA-758, Customer-Owned Outside Plant Telecommunications Cabling Standard (latest issue).

19. TIA/EIA TSB-72, Centralized Optical Fiber Cabling Guidelines (latest issue).

20. BICSI Telecommunications Distribution Methods Manual (latest issue).

21. FCC Part 68.50.

22. National Electrical Manufacturer's Association (NEMA).

23. National Fire Protection Association (NFPA), NFPA-70.

24. CCR Part 3 - California Electrical Code.

25. CCR Part 2 - Uniform Building Code.

26. HDcctv Alliance (HDcctv) HDcctv or current)

27. Society of Motion Picture and Television Engineers (SMPTE) SMPTE-292

C. Nothing in the drawings or specifications is to be construed to permit work not conforming to the codes or standards.

D. These codes or standards are to be considered minimum requirements.

E. Should the plans or specifications call for material, methods or construction of a higher standard, the plans or specifications shall govern.

F. All HDcctv HD-SDI equipment shall conform to EIA 170 specifications.

1.05 EXISTING CONDITIONS:

A. Contractor shall be held to have visited the site prior to submitting proposal to determine existing conditions, nature of materials to be encountered and to evaluate other information affecting the work to be performed.

B. Protect and maintain all existing pipelines, conduits, and structures.

C. Do not interfere with their safe operation.

D. Should damage occur notify the appropriate utility and the District at phone number 559-457-3000.

E. Damage costs are the responsibility of the contractor.

F. Existing Security Camera System shall remain functional until new Security Camera System is fully operational.

G. Existing Coaxial Cabling shall not be reused for the new Security Camera System.

PART 2 – PRODUCTS

2.01 DISTRICT STANDARDIZATION

The district has standardized by means of a board resolution pursuant to Public Contract Code, Article 4, Section 3400, certain equipment specified herein. Refer to FUSD Resolution 18-08 and exhibits for exact manufacturers and models which are to be sole sourced.

2.02 SYSTEM COMPONENTS, no substitution for Clinton Electronics parts.

A. Camera RG 6/U 18/2 Coax Wire:

1. Wire shall be RG 6/U 18/2 Composite Coaxial Cable.

2. Cable shall comply with UL 1666 Vertical Shaft Flame Test.

3. Center conductor shall be # 18 AWG solid 1.016 mm Bare Copper Conductor.

4. Twisted Pair Cable Component shall be one (1) pair 18 AWG Bare Copper with Red and Black Polypropylene Insulation Jacket.

5. Dielectric shall be gas injected, FHDPE Foam High Density Polyethylene, with 95% Tinned Copper Braid coverage, PVC jacket.

6. Nominal Attenuation/ 100 feet:

a. 1.476dB at 5MHz.

b. 14.108dB at 400MHz.

c. 23.295dB at 1000MHz.

7. Velocity of Propagation shall be: 82% minimum.

8. Nominal Impedance shall be: 75 Ohms.

9. Nominal cable O.D. shall be: 12.319mm.

10. Cable shall be 100% sweep tested: 1MHz to 1GHz.

11. Minimum Bend Radius/Minor Axis: 69.850mm.

12. Belden, 539945 RG 6/U 18/2 Composite Coaxial Cable meets this requirement.

B. RS-485 Control Wire:

1. RS-485 Control Wire shall terminate to RS-485 16 Port Serial Data Distribution Buss located next to the HDcctv HD-SDI Multi-Video Digital Video Recorder for that camera.

2. Each RS-485 Control Wire shall have no breaks or splices from camera to distribution buss.

3. Each RS-485 Control Wire shall be labeled and numbered correlating to camera.

4. Each RS-485 Control Wire shall be installed on the RS-485 16 Port Serial Data Distribution Buss in sequential number correlating to port number on HDcctv HD-SDI Multi-Video Digital Video Recorder for that camera. (ie number one camera shall be installed on port one of the DVR and its control wire shall be installed on port one of the distribution buss.)

5. HD-SDI PTZ Cameras are not to share RS-485 Control Wires.

6. Standard Category 5e Twisted Pair Cabling meets with this requirement.

C. Fiber Optical Cable:

1. Shall use Multi-mode fiber cable for Ethernet connections.

2. Shall use Single-mode fiber for HD-SDI Video connections.

3. Shall be rated for indoor/outdoor use in both vertical and horizontal applications.

4. Shall meet the requirements of NEC for OFNR cables.

5. Shall comply with Bellcore, FDDI, EIA/TIA-568, and Insulated Cable Engineers Association (ICEA) standards.

6. Shall be constructed using a water blocking technology to inhibit water from affecting the fibers.

7. Shall be reinforced with Aramid yarn and also meet the following additional criteria:

   a. Physical specifications:

Multi-mode:	Single-mode:
62.5 micrometer core	8.3 micrometer core
125 micrometer cladding	125 micrometer cladding
250 micrometer coating	250 micrometer coating
900 micrometer buffering	900 micrometer buffering
0.275 numeric aperture	0.13 numeric aperture
Graded Index	

8. Fiber Count:

   a. Multi-mode: 6 Fibers
   b. Single-mode: 6 Fibers

9. Shall have Maximum Tensile Load during Installation: 1600 N

10. Shall have Maximum Tensile Load Operating: 525 N

11. Shall have Cable minimum bending radius:

    a. During installation: 20 times the cable diameter
    b. After installation: 10 times the cable diameter

12. Shall have Buffered Fiber minimum bend radius: 0.75 inches

13. Shall have operating temperature: -40 to +85 degrees C

14. Shall Have Wavelength/attenuation:

	Multi-mode:		Single-mode:	
	850 nm	1300 nm	1300 nm	1550 nm
Attenuation	3.0 db/km	1.0 db/km	.5 db/km	.5 db/km
Bandwidth	400 MHz/km		600 MHz/km	

    Zero Dispersion Slope: 0.092 ps/(nm2-km)

15. The following Documents of the latest issue form a part of this specification to the extent specified herein:

a. ANSI/TIA/EIA-STD-RS-455: Standard Test Procedures for Fiber Optic Fibers, Cables Transducers, Connecting and Terminating Devices.

b. ANSI/TIA/EIA-STD-RS-359: Standard Colors for Color Identification and Coding.

b. ANSI/TIA/EIA-STD-598A: Optical Fiber Cable Color Coding.

c. MIL-STD-202: Test Methods for Electronic and Electrical Equipment.

d. MIL-HDBK-454: Standard General Requirements for Electronic Equipment.

e. MIL-STD-810: Environmental Test Methods and Engineering Guidelines.

f. UL Subject 1666: Standard Flame Test for Flame Propagation Height of Electrical and Optical Cable Installed Vertically in Shafts.

g. NFPA 70-1999: National Electric Code Article 770, Optical Fiber Cable.

16. All Fiber Ends shall be terminated in SC Style Connection Ends.

17. All Fiber Ends shall be securely mounted in a FUSD approved Fiber Light Guide Box.

18. All Fiber and Fiber Connections shall be clearly Labeled and Identified.

19. Optical Cable Corporation, DX006DSLA9KR (Single-mode), and DX006DWLS9KR (Multi-mode); meets this requirement.

D. HD-SDI Camera RG 6/U 18/2 Coax Wire BNC Connectors:

1. Shall be designed for RG6 coax cable.

2. Shall have BNC type connector.

3. Shall have permanent 360-degree water-tight seal on coax cable.

4. Shall provide superior pull-out strength of coaxial cable.

5. Shall provide reduced signal ingress and egress.

6. Shall have one-piece design.

7. Shall have advanced design to eliminate loose pins and sleeves.

8. Shall be designed to reduce installation time.

9. Shall have non-blind entry.

10. Shall use professional compression tool specially designed for connector.

11. Belden PPC Double Bubble Universal Compression BNC Connector, DB6U, and Cable Pro Double Bubble Compression Tool, CPLCRBC-BR; meets with this requirement.

E. Transceivers:

1. Clinton Electronics, CE-HD2FO-TX1, HD-SDI & RS485 to Fiber Transmitter.

2. Clinton Electronics, CE-HD2FO-RX1, HD-SDI & RS485 to Fiber Receiver.

3. Clinton Electronics, CE-PS200, Power Supply for HD2FO.

F. Signal Extenders:

1. Clinton Electronics, CE-EXSDI-T, EXSDI Signal and Power Extender.

2. Clinton Electronics, CE-T12VDC500, 12VDC Power Supply for Extender.

G. DVR, 16 Channel, EX/SDI 2.0:

1. Clinton Electronics, CE-FXVR16/30TB.
<u>16GB default DVR, qty. 1, unless noted otherwise or additional storage needed to meet performance requirements.</u>

H. Monitors:

1. Clinton Electronics, CE-VT320-C, 32” LCD Monitor.

2. Clinton Electronics, CE-VT420, HD, 42” LCD Monitor.
<u>Default Monitor, qty. 1, unless noted otherwise.</u>

3. Clinton Electronics, CE-VT50, 50” LCD Monitor.

4. Clinton Electronics, CE-9500B, Wall Mount for LCD Monitors.

5. Clinton Electronics, CE-EX2HDMI, HD-SDI to HDMI Converter.

6. Clinton Electronics, CE-PS200, Power Supply for Monitors.

I. Cameras:

1. EX-SDI 2.0 HD Mounted to deep box with 1-1/2” center punch:
   Clinton Electronics, CE-VX2HD (MOD)

2. Long Range, EX-SDI 2.0 HD Mounded to deep box with 1-1/2” center punch:
   Clinton Electronics, CE-VX3HD (MOD)

3. PTZ, 1080p, with appropriate Wall or Ceiling Mount:
   Clinton Electronics, CE-PTZ30XHDRS PTZ camera, and
   Clinton Electronics, PTZ-KEYB, 3-axis controller/keyboard.

4. Fixed 2MEG, Camera Only:
   Clinton Electronics, CE-VX2HD.
   Default INDOOR camera, qty. per plans, unless noted otherwise.

5. Fixed 2MEG, Long Range, Camera Only:
   Clinton Electronics, CE-VX3HD.

6. Fixed 4MEG, Camera Only:
   Clinton Electronics, CE-VX2QHD.

7. Fixed 2MEG, Indoor:
   Clinton Electronics, CE-BZ1HD.

8. Fixed 4MEG, Indoor:
   Clinton Electronics, CE-BZ1QHD.
   Default OUTDOOR camera, qty. per plans, unless noted otherwise.

J. Mounts/Brackets/Adapters:

1. Vandal X Bracket:
   Clinton Electronics, CD-VXWB.

2. Vandal X Top Cover:
   Clinton Electronics, CE-VXTWIRS.

3. Universal Corner Mount Adapter:
   Clinton Electronics, CE-UCB-CRNR.

4. Universal Pipe/Pole Mount Adapter:
   Clinton Electronics, CD-UCB-POLE.

5. Adapter Plate for Vandal X Cameras:
   Clinton Electronics, CE-VXAP.

K. Security Enclosure:

1. All HDcctv HD-SDI DVRs, Video Distribution Servers, RS-485 Serial Data Distribution Buss, Fiber Converters, Ethernet Converters, Audio Amplifiers, Encoders/Decoders, Fiber Optical Cables, Twisted Pair, Coaxial Cables, and other related material shall be installed in wall mounted Security Lockboxes.

2. Shall be constructed of fully welded 16-gauge steel.

3. Shall have dimensions of 23.87” W x 11.34” H x 28.24”.

4. Shall be installed with FUSD Approved Locks. FUSD shall inform contractor, before project begins, type of locks to be used.

5. Shall have internal Rack Rail to support standard 19” mounted equipment.

6. Internal Rack Rail shall have 1/2”, 3/4” 1” and 1-1/2” Electrical Knockouts and 2” x 4” Knockouts for Cable Pass-through on Back, Bottom, and Sides.

7. Shall come with two (2) 4-1/2” Fans, and Fan Cover Plate for effective thermal management.

8. Shall have Grommet Material installed on all Cable Pass-thru Openings to protect cable from damage.

9. Shall be installed with Internal Quad Outlet, 110V, 20 amps.

10. All cabling connections between Cameras/Fiber Converters/Power Supplies/DVRs shall be made in EMT conduit.

11. No exposed cabling is allowed.

12. Middle Atlantic, DLBX Lockbox with DLBX-RR5 Rail Rack meets this requirement.

L. RS-485 16 Port Serial Data Distribution Bus (PTZ only):

1. Shall be installed with every HDcctv HD-SDI DVR.

2. Shall have Two (2) RS-485 Serial Data Input Ports.

3. Shall have Sixteen (16) RS-485 Serial Data Output Ports.

4. Shall have One (1) RS-232 Serial Data Input Port.

5. Shall be powered with External Power Supply.

6. Each HDcctv HD-SDI PTZ Camera shall be connected to RS-485 Serial Data Distribution Buss with Standard CAT 5e Twisted-Pair Cable.

7. All HD-SDI PTZ Cameras that run to the HDcctv HD-SDI DVR shall have the RS-485 Serial Data Inputs connected through this RS-485 Serial Data Distribution Buss.

8. Vitec, VT-DD16 with Standard CAT 5e Twisted-Pair Cabling meets this requirement.

M. Site Audio Encoder:

1. Shall be installed at all sites that have Swimming Pools.

2. Connection between Encoder and Decoder shall be Fiber Optic Cable.

3. Shall use standard Fiber Optic Cable to Twisted Pair 1Gig Ethernet Converters.

4. Shall be installed in Security Enclosure.

5. Shall be connected to Audio Output of the DVR that controls the HDcctv Security Cameras for the Swimming Pool Areas.

6. Shall have the following Audio Input Specifications:
   - RCA connectors, unbalanced, 2k Ohm impedance.
   - Clipping level 5.3 dBu, 4 Vpp.
   - Frequency response (-3dB) 20 -- 20'000 Hz.
   - Signal to Noise Ratio 89dB, THD <0.03%.
   - Stereo crosstalk -89dB.
   - Input signal attenuable by software setting (-3 -- +19.5dB).

7. Shall have RS-232 Serial Interface.

8. Shall have the following Audio Formats Specifications:
   - MP3, encoding/decoding up to 192/320kbps.
   - VBR and CBR support.
   - PCM 16bit @8, 16, 22.05, 24, 32, 44.1, 48 kHz.
   - G.711, uLaw, aLaw (sample rates same as PCM).

9. Shall have aluminum case construction.

10. Barix Instreamer, 2012.9123 with Fiber Optic to Twisted Pair 1Gig Ethernet converter meets this requirement.

N. Site Audio Decoder:

1. Shall be installed at all sites that have Swimming Pools.

2. Connection between Encoder and Decoder shall be Multi-Mode Fiber Optic Cable, as detailed in Section 16790, Part 2, C, 1-15.

3. Shall use Multi-Mode Fiber Optic Cable to Twisted Pair 1Gig Ethernet Converters.

4. Shall be installed in Security Enclosure as detailed in Section 16790, Part 2, H, 1-13.

5. Shall be connected to Site Audio Speaker.

6. Shall have the following Analog Output Specifications:
   - 2 x 25 W (RMS @ 8 Ohm) speaker outputs.
   - 3.5 mm (1/8 inch) headphone jack.
   - S/P DIF out (optical).
   - Output level software controllable.
   - Frequency response (-3 dB) 19 Hz -- 20 kHz.
   - Dynamic range 94 dB.
   - SNR/THD -94 dB, <0.05%).

7. Shall have RS-232 Serial Interface.

8. Shall have the following Audio Formats Specifications:
   - MP3, encoding/decoding up to 192/320kbps.
   - VBR and CBR support.
   - PCM 16bit @8, 16, 22.05, 24, 32, 44.1, 48 kHz.
   - G.711, uLaw, aLaw (sample rates same as PCM).

9. Shall have built-in IR receiver, with IR remote control included.

10. Shall have aluminum case construction.

11. Barix Exstreamer 200, 2005.9055 with Fiber Optic to Twisted Pair 1Gig Ethernet converter meets this requirement.

O. Site Audio Speaker:

1. Shall be installed at all sites that have Swimming Pools.

2. Shall be connected to Site Audio Decoder.

3. Shall use #304 Stainless Steel for Exterior Enclosure.

4. Shall have Output Rating of 30 Watts Nominal/ 50 Watts Peak.

5. Shall have Impedance of 8 Ohms.

6. Shall have Frequency Response of: 500 to 7000 Hz.

7. Shall have High Fidelity Voice Coil.

8. Shall have Heavy Duty 1.8lb Magnet.

9. Shall be rated for Exterior Installation.

10. Elk Products Inc., ELK-1RT meets this requirement.

P. Video Redistribution Servers:

1. Contractor shall supply for each site One (1) Video Redistribution Server, located in the Central MDF Room.

2. Shall be installed Turn-Key Functional on Mini-ITX Form Factor, XeonE3 Processor Based, Industrial Server.

3. Shall have no recurring costs for software or hardware licensing or other fees.

4. Shall have Windows 10 Professional Installed.

5. Shall have Dual Gigabyte Ethernet Ports on Server Board.

6. Shall have 16 Gigabyte Ram memory.

7. Shall have 1TB Solid State Hard Drive (SSD) storage.

8. Shall have Low Profile, Wall Mountable, and Motherboard Case.

9. Shall be installed in Security Enclosure as detailed in Section 16790, Part 2, H, 1-13.

10. Shall have two (2) Gigabit Ethernet LAN Ports.

11. Gigabit Ethernet LAN Ports shall be Physically Separated and Independent of each other.

12. Shall connect to Site HDcctv DVRs through one Independent Gigabit Ethernet LAN Port.

13. Shall connect to Site LAN through second Independent Gigabit Ethernet LAN Port.

14. Shall have 80 1080p/15fps Input Stream Channels.

15. Shall have 80 1080p/15fps Output Stream Channels.

16. Shall have 100 Users Support.

17. Shall have Local Network DVR Auto-Detection Support.

18. Shall have Batch Registration of Auto-Detected DVRs Support.

19. Shall have Batch Registration of Multi Users Support.

20. Shall have Power Adapter with Input 100/240 Volts AC 50-60 Hz, and Output 12V DC 10 Amp (12V, 10A DC).

21. Asus P9D-I Mini-ITX Server board; with Intel XeonE3 Processor, E3v3 E3-1275V3; 16Gig Ram; Samsung 1TB SSD, 840Evo; Windows 10 Professional; Black Habey Low Profile Mountable Mini-ITX Case, EMC-800BL; Diamond AMD Radeon HD 7750 PCIE 1G GDDR5 Video Graphics Card, 60mm x 10mm PWM Fan, 12V DC 10 Amp Power Supply, and WebGate Redistribution Server Software, WinRDS; meets with this requirement.

Q. NTP Servers:

1. Contractor shall supply for each site One (1) NTP Server, located in the Central MDF Room.

2. Shall be installed Turn-Key Functional on Mini-ITX Form Factor, Intel Celeron Processor Based, Industrial Server.

3. Shall have no recurring costs for software or hardware licensing or other fees.

4. Shall have Windows 10 Professional Installed.

5. Shall have Dual Gigabyte Ethernet Ports on Server Board.

6. Gigabit Ethernet LAN Ports shall be Physically Separated and Independent of each other.

7. Shall have 16 Gigabyte Ram 1333MHz / 1600MHz DDR3L SO-DIMM memory.

8. Shall support mSATA SSD and 2.5" HDD SATA 3.0 (6Gb/s).

9. Shall have 1TB Solid State Hard Drive (SSD) storage.

10. Shall have Low Profile, Wall Mountable, and Motherboard Case.

11. All servers shall be powered with 550W battery back-up (UPS). UPS to be mounted inside security enclosure. Minimum 550W meets this requirement.

12. Shall be installed in Security Enclosure as detailed in Section 16790, Part G 1-13.

13. Shall have two (2) Gigabit Ethernet LAN Ports.

14. Shall connect to Site LAN through second Independent Gigabit Ethernet LAN Port.

15. Shall have Intel Celeron Processor J1900 Quad-Core 2M Cache, 2.41 GHz.

16. Shall have one USB 3.0 port.

17. Shall have one HDMI port.

18. Shall have one RS-232 Serial port.

19. Shall have VESA Mount Bracket (75mm x75mm).

20. Shall have Power Adapter with Input 100/240 Volts AC 50-60 Hz, and Output 12V DC 10 Amp (12V, 10A DC).

21. QoTom Q190, Bay Trail Mini PC, Q190-S02; 16Gig Ram; Samsung 1TB SSD, 840Evo; Windows 10 Professional; and 12V DC 10 Amp Power Supply; meets with this requirement.

PART 3 – EXECUTION

3.01 INSTALLATION

Upon receipt of all materials on this job site, but prior to beginning any installation. Contractors shall schedule a pre-installation meeting with FUSD Camera shop to review all materials proposed for use and mounting locations of all components.

A. Installation of RG 6/U 18/2 Coaxial Cable:

1. Wire shall be RG 6/U coaxial cable with two 18-gauge conductors to provide effective transmission over assigned runs.

2. The two 18-gauge cables shall be used for power.

3. All cable & wire runs shall be continuous between components or wire. No splicing of any cable installed under this section is allowed.

4. Shall be connected to HDcctv HD-SDI DVR thru BNC Connection Panel with RG 6 BNC Jumper Wires.

5. See HDcctv HD-SDI Camera and Cable Manufactures minimum specifications for cable distance.

6. At no time shall coaxial cable runs exceed 600 feet.

7. Except as otherwise indicated by FUSD Representative, install wiring in raceway.

8. Conceal raceway, except in unfinished spaces and as indicated by FUSD Representative.

9. All cabling connections between HDcctv HD-SDI Cameras and HDcctv HD-SDI DVRs shall be made in appropriate conduit runs.

10. No exposed cabling is allowed.

11. Install cable without damaging conductors or jacket.

12. Do not bend cable to a smaller radius than minimum recommended by manufacturer.

13. Do not exceed manufacturers recommended pulling tensions.

14. Pull cables simultaneously where more than one is being installed in the same raceway or at the same location.

15. Compound/Lubricant shall be used.

16. Compound/Lubricant used must not damage conductor insulation.

17. Use pulling methods that will not damage cable or raceway, including fish tape, cable, rope, break-a ways, and wire-cable grips.

18. All wire installed on the exterior of FUSD School Sites shall be in galvanized conduit or liquid-tight conduit a minimum of 2” in size.

19. Individual and group cable runs in accessible ceiling spaces shall be open cable runs supported by “J” hooks attached to the building structure.

20. Refer to Fresno Unified Master Specifications, section 16700 3.06-3.18 and Details E2-1 - E2.80 for more information on proper installation requirements.

21. RG 6/U BNC Connector Ends shall be terminated with manufacturer’s approved methods and tools.

22. RG 6/U BNC Connector Ends shall be terminated with uniformed pressure to insure a secure vapor barrier around the diameter of the outer cable.

23. RG 6/U BNC Connector Ends shall be terminated to withstand stress when pulled by hand.

B. RS-485 Control Wire:

1. Each HD-SDI PTZ Camera shall have individual RS-485 Control Wire run with the RG 6/U 18/2 Coax Cable.

2. All cable runs shall be from the cameras to the nearest HDcctv HD-SDI DVR as identified by FUSD.

3. Each RS-485 Control Wire shall have no breaks or splices from camera to distribution buss.

4. Each RS-485 Control Wire shall be labeled and numbered correlating to camera.

5. Each RS-485 Control Wire shall be installed on the RS-485 16 Port Serial Data Distribution Buss in sequential number correlating to port number on HDcctv HD-SDI Multi-Video Digital Video Recorder for that camera. (ie number one camera shall be installed on port one of the DVR and its control wire shall be installed on port one of the distribution buss.)

6. Each HD-SDI PTZ Camera shall have a dedicated RS-485 Control Wire.

7. Cameras are not to share RS-485 Control Wires.

8. At no time shall coaxial cable runs exceed 600 feet.

9. All cabling connections shall be made in appropriate conduit runs.

10. No exposed cabling is allowed.

11. Install cable without damaging conductors or jacket.

12. Do not bend cable to a smaller radius than minimum recommended by manufacturer.

13. Do not exceed manufacturers recommended pulling tensions.

14. Pull cables simultaneously where more than one is being installed in the same raceway or at the same location.

15. Compound/Lubricant shall be used on all cable pulls.

16. Compound/Lubricant used must not damage conductor insulation.

17. Use pulling methods that will not damage cable or raceway, including fish tape, cable, rope, break-a ways, and wire-cable grips.

18. All wire installed on the exterior of FUSD School Sites shall be in galvanized conduit or liquid-tight conduit a minimum of 2” in size.

19. Individual and group cable runs in accessible ceiling spaces shall be open cable runs supported by “J” hooks attached to the building structure.

20. Refer to section 16700 3.06-3.18 and Details E2-1 - E2.80 for more information on proper installation requirements.

C. Installation of Fiber Optical Cable:

1. Fiber Optical Multi-Mode Cable for Ethernet Data shall be used to connect HDcctv HD-SDI DVRs to Video Distribution Server when distance exceeds Twisted-Pair Specifications.

2. Fiber Optical Multi-Mode Cable for Ethernet Data Connections shall be used with FUSD approved 1Gig Ethernet Twisted Pair to Multi-Mode Fiber Optic Transceivers.

3. Fiber Optical Single-Mode Cable for HDcctv HD-SDI Video shall be used to connect HDcctv HD-SDI DVRs to HDcctv HD-SDI Cameras when distance exceeds 200 Meters.

4. Fiber Optical Single-Mode Cable for HDcctv HD-SDI Video shall be used with FUSD approved HDcctv HD-SDI Single-Mode Fiber Optic Transceivers

5. Fiber Optical Cable shall be terminated in FUSD approved Light Guide Boxes.

6. Fiber Optical Cable shall be installed in Security Enclosure.

7. All cable runs shall be from the Site HDcctv HD-SDI DVRs to Site Video Redistribution Server.

8. Except as otherwise indicated by FUSD Representative, install wiring in raceway.

9. Conceal raceway, except in unfinished spaces and as indicated by FUSD Representative.

10. All cabling connections between HDcctv HD-SDI DVRs and Video Redistribution Server shall be made in conduit runs.

11. No exposed cabling is allowed.

12. Install Fiber Optical Cable without damaging conductors or jacket.

13. Do not bend Fiber Optical Cable to a smaller radius than minimum recommended by manufacturer.

14. Do not exceed manufacturers recommended pulling tensions.

15. Pull Fiber Optical Cable simultaneously where more than one is being installed in the same raceway or at the same location.

16. Pulling Compound/Lubricant shall be used.

17. Compound/Lubricant used must not damage conductor insulation.

18. Use pulling methods that will not damage Fiber Optical Cable or raceway, including fish tape, cable, rope, break-a ways, and wire-cable grips.

19. All Fiber Optical Cable installed on the exterior of FUSD School Sites shall be in galvanized conduit or liquid-tight conduit a minimum of 2” in size.

20. Individual and group cable runs in accessible ceiling spaces shall be open cable runs supported by “J” hooks attached to the building structure.

21. Refer to section 16700 3.06-3.18 and Details E2-1 - E2.80 for more information on proper installation requirements.

D. Mounting of HDcctv HD-SDI Static Cameras:

1. All mounting hardware and installation practices shall be approved by FUSD personnel before proceeding with installation.

2. Camera mounting locations shall be between 12’ to 14’ above finished floor. Contractor shall insure that camera locations are not blocked or have the cameras view impaired by any other building components.

3. Mounting of HDcctv HD-SDI Camera Equipment shall be on permanent surfaces only.

4. HDcctv HD-SDI Camera Equipment is NOT to be mounted on removable or non-permanent surfaces such as removable ceiling tiles.

5. Shall be connected to HDcctv HD-SDI DVR thru BNC Distribution Panel using RG 6 Coax Cabling and RG 6 Coax Jumper Cabling.

6. All cabling connections between HDcctv HD-SDI Cameras, Power Supplies, RS-485 Serial Data Distribution Buss, and HDcctv HD-SDI DVRs shall be made in appropriate conduit runs.

7. No exposed cabling is allowed.

8. All HDcctv HD-SDI camera cabling and conduit systems shall be routed so that it is tamper proof.

9. **HDcctv HD-SDI Camera locations are to be approved by FUSD Representative before work is to begin.**

E. Mounting of HDcctv HD-SDI Pan/Tilt/Zoom Cameras:

1. All mounting hardware and installation practices shall be approved by FUSD personnel before proceeding with installation.

2. Mounting locations shall be placed as high as the maximum viewing area allows.

3. Mounting of HDcctv HD-SDI Camera Equipment shall be on permanent surfaces only.

4. HDcctv HD-SDI Camera Equipment is NOT to be mounted on removable or non-permanent surfaces such as removable ceiling tiles.

5. Shall be connected to HDcctv HD-SDI DVR thru BNC Distribution Panel using RG 6 Coax Cabling and RG 6 Coax Jumper Cabling.

6. Shall be connected to RS-485 Serial Data Distribution Buss with Standard CAT 5e Twisted-Pair Cabling.

7. All cabling connections between HDcctv HD-SDI Cameras, Power Supplies, RS-485 Serial Data Distribution Buss, and HDcctv HD-SDI DVRs shall be made in appropriate conduit runs.

8. Shall be installed no further than 200m total distance between HDcctv HD-SDI PTZ Camera and HDcctv HD-SDI DVR.

9. No exposed cabling is allowed.

10. All HDcctv HD-SDI camera cabling and conduit systems shall be routed so that it is tamper proof.

11. HDcctv HD-SDI Camera locations are to be approved by FUSD Representative before work is to begin.

F. Installation of HDcctv HD-SDI DVRs:

1. HDcctv HD-SDI DVRs shall be secured in an individual wall mounted Security Enclosures.

2. Shall be installed in multiple locations on each Site.

3. Shall be installed in locations that do not exceed 200m total distance between HDcctv HD-SDI DVR and furthest Camera.

4. Shall be connected to RS-485 Serial Data Distribution Buss with Standard CAT 5e Twisted-Pair Cabling.

5. All cabling connections between HDcctv HD-SDI Cameras and HDcctv HD-SDI DVRs shall be made in appropriate conduit runs.

6. Dedicated 110 volt 20-amp circuit and Power Outlets shall be mounted inside each Security Lockbox and Power Supply.

7. Shall be installed in accordance to FUSD Master Specifications for Electrical Installations Sections 16010 – 16610.

8. No exposed cabling is allowed.

G. Installation of Security Enclosures:

1. All HDcctv HD-SDI DVRs, Video Distribution Servers, RS-485 Serial Data Distribution Buss, Fiber Converters, Ethernet Converters, Audio Amplifiers, Encoders/Decoders,

Fiber Optical Cables, Twisted Pair, Coaxial Cables, and other related material shall be installed in wall mounted Security Lockboxes.

2. Shall be installed with FUSD Approved Locks.

3. FUSD shall inform contractor, before project begins, type of locks to be used.

4. Shall be installed with minimum 2” conduit for all camera cables.

5. Number of 2” and larger conduits shall be determined by site conditions.

6. Shall be installed with internal Rack Rail to support standard 19” mounted equipment.

7. Internal Rack Rail shall have 1/2”, 3/4” 1” and $1^{1/2”}$ Electrical Knockouts and 2” x 4” Knockouts for Cable Pass-through on Back, Bottom, and Sides.

8. Shall be installed with two (2) $4^{1/2”}$ Fans, and Fan Cover Plate for effective thermal management.

9. Shall be installed with Grommet Material installed on all Cable Pass-Thru Openings to protect cable from damage.

10. Shall be installed with Dedicated Double Duplex 110voltAC 20-amp Power Outlets within each enclosure.

11. All cabling connections between Cameras/Fiber Converters/Power Supplies/DVRs shall be made in EMT conduit.

12. Shall be installed in accordance to FUSD Master Specifications for Electrical Installations Sections 16010 – 16610 & per FUSD standard drawing “DLBX Lockbox” revised on 11/26/14.

13. Shall be installed with BNC Patch Panel for each Video Feed, for service and testing of video signal.

14. Shall be installed with two (2) Ethernet jacks connected Site LAN.

15. When Two (2) Enclosures are installed in same area, they shall be mounted side by side as diagrammed in Detail 16790-02.

16. See Detail 16790-02 for Layout and Mounting Diagrams.

17. No exposed cabling is allowed.

H. Installation of HD Spot Monitors:

1. Shall be used to monitor single or multiple HDcctv HD-SDI Spot Cameras.

2. Shall be installed as Site conditions require and with approval from FUSD Representative.

3. Shall be installed with HDcctv HD-SDI to HDMI Converter (See Section16790, Part 2, J, 1-9.

4. Shall be installed with wall mounted Monitor mount.

5. Signal shall be feed from appropriate HDcctv HD-SDI Camera HDMI Converter with an appropriate length HDMI Cable.

6. Shall be installed with Duplex 110voltAC 20-amp Power Outlet.

7. Power and Signal feed shall be terminated in appropriate wall boxes.

8. Power and Signal feed shall have corresponding outlets for 110v and HDMI connection.

9. Signal feed shall connect to Spot Monitor with a short, small diameter HDMI Cable.

10. Shall be installed in accordance to FUSD Master Specifications for Electrical Installations Sections 16010 – 16610.

11. Final placement of spot monitor will be determined by site needs, site conditions, and approval of FUSD representative.

12. No exposed cabling is allowed.

I. Mounting of HDcctv HD-SDI Camera Power Supplies:

1. All mounting hardware and installation practices shall be approved by FUSD personnel before proceeding with installation.

2. All cabling connections between HDcctv HD-SDI Cameras/Fiber Converters/Power Supplies/HDcctv HD-SDI DVRs shall be in conduit. Per FUSD Electrical specified run

3. No exposed cabling is allowed.

4. All HDcctv HD-SDI camera cabling and conduit systems shall be routed so that it is tamper proof.

J. Installation of Audio System:

1. Shall be used at sites where one-way communication from the Central Station to site is required.

2. Shall be installed in Security Enclosure.

3. Shall be feed from the site HDcctv HD-SDI DVR audio output.

4. Dedicated and Isolated Fiber Optical Cable with Ethernet Converters shall be used to interconnect Audio Encoder to Audio Decoder.

5. High Temp Power Supplies shall be used with all Audio Equipment.

6. Dedicated 110 volt 20-amp Power Outlets shall be mounted inside each Security Lockbox and Power Supply.

7. Outdoor Speaker shall be installed as close to area intended for coverage as is physically possible.

8. Final placement of Outdoor Speaker will be determined by site needs, site conditions, and approval of FUSD Representative.

9. No exposed cabling is allowed.

K. Installation of Video Redistribution Servers:

1. Each Site shall have one Video Redistribution Server installed in a central location.

2. Video Redistribution Servers shall be installed in a Security Enclosure.

3. Shall be installed with FUSD Approved Locks.

4. FUSD shall inform contractor, before project begins, type of locks to be used.

5. Dedicated and Isolated Fiber Optical Cable with Ethernet Converters shall be used to interconnect Video Redistribution Server to Site HDcctv HD-SDI DVRs.

6. Video Redistribution Servers shall have dedicated twisted pair Category 6 cabling or Isolated Fiber Optical Cable with Ethernet Converters (dependent upon site conditions) connected to local site LAN.

7. Dedicated 110 volt 15-amp Power Outlets shall be mounted inside each Security Lockbox, to supply power to Video Redistribution Server.

8. No exposed cabling is allowed.

L. Installation of NTP Servers:

1. Each Site shall have one NTP Server installed in a central location.

2. NTP Servers shall be installed in a Security Enclosure.

3. Shall be installed with FUSD Approved Locks.

4. FUSD shall inform contractor, before project begins, type of locks to be used.

5. NTP Servers shall have dedicated twisted pair Category 6 cabling or Isolated Fiber Optical Cable with Ethernet Converters (dependent upon site conditions) connected to local site LAN.

6. Dedicated 110 volt 20-amp Power Outlets shall be mounted inside each Security Lockbox to supply power to NTP Server.

7. No exposed cabling is allowed.

M. Wiring in Wire Closets and Cabinets:

1. Install conductors parallel to and at right angles to walls, bundle, lace, and train the conductors to terminal points with no excess.

2. Use wire distribution spools at points where cables are fanned or conductors turned.

3. Label each terminal with designations approved by the equipment supplier.

N. HD-SDI Camera, RS-485 Control Wire, RG 6/U 18/2 Coax Cable, and Fiber Optical Cable Labeling:

1. Labels shall be machine printed on appropriately sized vinyl or other approved material.

2. Lettering shall be black and printed on white frosted surface and covered by a minimum of two wraps of clear protective material.

3. One-piece label is required.

4. Labels shall be placed on each end of the cable and at other weather-protected places where the cable is visible.

5. Sample labels shall be provided for approval before installation.

6. Label information shall be included on the “as-built” drawings.

7. HD-SDI Camera Labeling:

    a. Shall be labeled internal to HDcctv HD-SDI DVR System.

    b. Shall be labeled to represent the area being viewed.

8. RS-485 Control Wire Labeling:

    a. Shall be labeled indicating “Camera Source” and “Destination” of cable.

    b. Label shall read: *FROM Camera X to Room X*.

9. RG 6/U 18/2 Coax Cable Labeling:

    a. Shall be labeled indicating “Camera Source” and “Destination” of cable.

    b. Label shall read: *FROM Camera X to Room X*.

10. Fiber Cable Labeling:

    a. Shall be labeled indicating “Source” and “Destination” of cable.

    b. Label shall read: *FROM MDF (Room X) to Room X*.

O. New construction pathway:

1. In new construction, a 2” minimum conduit system terminated to 6" or larger square box with single gang or larger plaster rings minimum must be installed to each of the camera locations that are located on an inside or outside wall.

2. Conduit and square box size hall be determined by site conditions.

3. The conduit system must be stubbed into the inside attic space of the building that will provide a clear pathway to the nearest data closet.

4. All exposed conduit and enclosures shall be painted to match existing wall color schemes.

P. Installation of Security Camera Viewer Software:

1. Security Camera Viewer Software shall be installed on designated Site computer terminals.

2. Contractor shall work with Site Personnel and FUSD Representative to identify all computer terminals that will be used to view Site Security Camera System.

3. Contractor shall develop an inventory list, by site, of all computer terminals to be used with Viewer Software.

4. Inventory List shall include Make, Model, OS Version, Serial Number, DPN Number, and Name of Site Personnel computer terminal is assigned to.

5. All Site Personnel Computer Terminals shall be approved by FUSD Representative before installation of Viewer Software.

6. Inventory list shall be delivered to FUSD Representative in electronic format on USB V3.0 storage stick, and bound in printed paper format.

Q. Salvage of Existing Security Camera System Equipment:

1. All existing Security Camera System Equipment shall be salvaged in working order and returned to FUSD.

2. All existing Security Camera System Equipment shall be left functional and in place until new System is fully functional.

3. Contractor shall take care to not damage Equipment when being salvaged.

4. Contractor shall inventory all Equipment salvaged.

5. Contractor shall pack all Equipment in secure protective packaging.

6. Packaging shall be labeled to indicate Contents and Site from which Equipment was salvaged.

7. Contractor shall deliver packaged Equipment to a location designated by FUSD Representative.

3.02 PROJECT FINALIZATION:

A. Coax Cable Testing and Certification:

1. All Coax cable and shall be tested following installation.

2. Testing shall include continuity of coax and 18 gauge wires as needed.

3. Impedance of coax shall be tested to assure compliance of manufacture specification in relation to total footage installed.

4. Use commercially manufactured field tester with hard copy of test results.

5. Three copies (hard copy) of the test results shall be delivered to the F.U.S.D. personnel prior to project acceptance.

6. Mechanical testing of BNC connectors shall be done by apply quick pulling pressure to insure proper seal of connector onto coax cabling.

B. Fiber Optic Cable Testing and Certification:

1. All Fiber Optic Cable shall be tested using an approved Optical Power Meter.

2. Power Meter measurements shall be made from both ends of the cable.

3. Measured results shall be within cable manufacturer's specifications.

4. Cable shall be tested at both 850 nm and 1300 nm for Multi-mode fiber and at 1300 and 1550 nm for Single-mode fiber.

5. Any cable or termination, which does not meet manufacturer's specifications, shall be replaced and retested.

6. Provide three copies (hard copy), bounded, of the test results for Owner's approval before project acceptance.

7. All Power Meter Testing shall be done in the presence of a District appointed Observer.

C. Over-all System Testing:

1. Contractor shall test each camera location utilizing a method which tests the functionality of the camera, the DVR recording capability, and quality of images captured.

2. The method employed shall use real time images and clearly indicate area of view.

3. Any adjustments needed to equipment will be finalized with this test.

4. District personal will approve all final quality of image and areas of coverage before project will be accepted.

D. All Testing shall be done in the presence of a District appointed Observer.

E. As-Built Drawings:

1. Before project will be accepted, the contractor will provide as-built drawings.

2. The as-built record documents shall include edited drawings and specifications, accurately reflecting field conditions, **inclusive** of all project revisions, change orders, and modifications.

3. Drawings shall be three (3) hard copies, full size, same as bid documents.

4. Finalized form shall also be submitted electronically on an USB V3.0 stick drive in three (3) formats: (1) AutoCAD 2018, (2) PDF, and (3) WebGate Control Center Professional (4.x).

5. Drawings shall show only one level per page of sites that have multiple levels.

6. Maps shall indicate location of cameras, nearest wiring cabinet that cameras connect to, and verified area of view for each camera.

7. HDcctv HD-SDI Cameras will be clearly labeled and correspond to labeling in DVR system.

8. A sample As-Built Drawing shall be provided as an example of expected finial format, on request.

END OF SECTION

SECTION 283100 – FIRE DETECTION AND ALARM

PART 1 – GENERAL

1.1 DESCRIPTION

A. Work Included:

1. The furnishing of all labor, equipment, materials and performance of all operations in connection with the installation of the Fire Alarm System (FAS) as shown on the drawings and as herein specified.

2. The complete installation shall conform to the applicable sections of NFPA 72 2016 Ed., Local Code Requirements, Fresno Fire Prevention Bureau and California Electrical Code (CEC).

3. All equipment, devices and cables shall be listed by Underwriters' Laboratories, Inc. and or approved by Factory Mutual for the purpose of fire alarm systems and shall be listed with the California State Fire Marshal (CSFM).

4. It is the intent of the Contract Documents to provide an installation complete in every respect. In the event that additional details or special construction is required for work indicated or specified in this Section or work specified in other Sections, it shall be the responsibility of the Contractor to provide all material and equipment which is usually furnished with such systems in order to complete the installation, whether mentioned herein or not.

1.2 DESIGN REQUIREMENTS

A. The Fire Detection System shall be responsible for continually supervising and monitoring by zone the following initiating, signaling and monitoring circuits designated as:

1. Manual fire pull stations.

2. Smoke and heat detectors, including those installed under other Sections.

3. Alarm signaling circuits (alarm bells and visual alarm unit).

4. Remote Annunciator.

5. The system controls shall be Underwriters' Laboratory listed for power-limited applications per CEC 760.

B. The (FAS) configurations for the projects shall be as follows:

1. Speakers and strobes shall be used for fire alarm signaling. Class change signaling shall be independent of the fire alarm system.

2. Activation of duct smoke detectors in the Air Handling ducts shall be annunciated at the main Fire Alarm Control Panel.

1.3 DISTRICT APPROVAL

A. All Fire Alarm, Signal and Control Equipment shall be approved by the Fresno Unified School District (FUSD) in addition to other required approvals.

B. Certification: Installation of the Fire Alarm System shall not be started until drawings, including State Fire Marshal listed numbers of all fire alarm components, are submitted to and approved by the State Fire Marshal (DSA). Written certification by the fire alarm equipment distributor or manufacturer shall be submitted to the Architect and the State Fire Marshal stating that the system and its component parts are as "approved and listed" by the State Fire Marshal and that the installation conforms in all respects to the requirements set forth in Article 72, Title 24, California Administrative Code.

C. All equipment to be supplied under this section shall be 100% solid state in design.

1.4 SUBMITTALS:

A. All submittals shall be made in accordance with Section 01300.

B. Shop Drawings: Show equipment locations, wiring schematics, details, panel's configuration and size and a point-to-point schematic of circuits and zone schedules. Include front elevations, cabinet dimensions, type of mounting, doors, barriers, catalog number of locks, and finishes for all terminal cabinets. Show interfaces to equipment furnished by others, identifying numbers of wires and termination requirements. Responsibility for each end of the interfaces shall be noted.

C. Complete descriptive data indicating Underwriters' Laboratories and California State Fire Marshal listings for all system components.

D. Complete sequence of operations of the system.

E. Complete system wiring diagrams for components connected to the system and interfaces to existing equipment.

F. A copy of any State or Local Fire Alarm System equipment approvals.

G. Provide one copy of acceptance test procedures for review.

H. Provide supplier's qualifications indicating years in business, service policies, warranty definitions and list of similar installations.

I. Equipment, other than specified, will be considered for approval provided it meets previous Items A through H and the following is submitted in writing by the Electrical Contractor to the Engineer to allow approval at least 14 days before the bid date:

1. Complete lists, descriptions and drawings of materials to be used, including all (CSFM) listing numbers.

2. A complete riser diagram of fire alarm system.

3. A complete list of current drain requirements during normal supervisory conditions, trouble conditions and alarm system.

4. Battery standby calculations showing total standby needed to meet the system requirements as specified.

5. If any attempt is made to substitute that brand of equipment specified it shall be the Contractor's obligation to submit the above data and information to allow the specifying engineer time to consider the equality of the substituted items to that specified. It is the Contractor's responsibility to meet the entire intent of the Specifications. Deviations from the specified items shall be at the risk of the Contractor until the date of final acceptance by the Architect, Engineer and Owner's representative.

6. Approved submittals on substitute equipment shall only allow the Contractor to proceed with installing a substituted item and shall not be considered equal until such time as the Architect, Engineer and the Owner's representative have completely accepted the substituted item. All cost for removal, relocations or replacement of a substituted item shall be at the risk of the Electrical Contractor.

J. Fire Alarm System shall be supplied from a single source and shall be labeled with the manufacturer's name and logo on all system equipment and devices.

1.5 QUALITY ASSURANCE:

A. Shall be done by qualified Contractor holding C-10 and other licenses required by authorities having jurisdiction.

B. Each system shall be installed by an authorized manufacturer's representative with duly authorized local representation who can, upon request, give evidence satisfactory to the Engineer that he maintains a fully equipped service organization stocking the manufacturer's standard parts and capable of furnishing, in the sole judgment of the Engineer, adequate inspections and service to the system. All signal equipment shall be supplied and installed by a licensed and bonded signal contractor holding a valid California State Electrical Contractor's license with the proper endorsements for performing work of this specification.

1.6 WARRANTY:

A. The Contractor shall warrant the completed Fire Alarm System wiring and equipment to be free from inherent mechanical and electrical defects for a period of one year from the date of the completed and certified test or from the date of first beneficial use.

B. Trouble Calls: The Contractor shall guarantee response to a trouble call within 24 hours after the receipt of such a call.

C. The equipment manufacturer shall make available to the Owner a Maintenance Contract Proposal to provide a minimum of two inspections and tests per year in compliance with NFPA 72 guidelines.

1.7 PERFORMANCE:

Furnish and install a complete Fire Alarm System as described herein and as shown on the drawings to be wired, connected, and left in first class operating condition. The system supplied under this specification shall be a microprocessor-based direct wired, multi-priority peer-to-peer networked system. The system shall utilize independently addressed, microprocessor-based smoke detectors, heat detectors, and modules as described in this specification. It shall be complete with all necessary hardware, software and memory specifically tailored for this installation. It shall be possible to permanently modify the software on site by using a plug-in programmer.

1.8 DISCREPANCIES

Discrepancies and/or conflicts noted between drawings and written specifications should be addressed in writing and submitted to the engineer and (FUSD) for clarification.

1.9 SCOPE OF WORK

A. The fire alarm scope of work shall consist of the following minimum requirements.

1. Fire Control Panels and Annunciators.

a. New fire alarm control panels shall be Owner Furnished, Contractor installed (OFCI). Install where shown on plans. Additional related remote data gathering panels shall be provided as needed.

b. A new remote LCD annunciator shall be provided at the main administration office. The annunciator shall report activity and control all fire alarm functions in the buildings. All control features shall be disabled if a separate fire control room is provided.

c. All FACP and remote data gathering panels shall complete the “network” between all areas of the campus and building(s) allowing the units report individual zoning information to Fresno Unified’s central receiving station. Zoning shall be in compliance with plans and specifications furnished by the engineer and approved by Fresno Unified personnel.

d. Existing FACP, where applicable, shall be removed upon completion and returned to (FUSD).

B. Initiating Devices

1. All initiating devices shall be new addressable devices as specified.

2. Smoke detectors shall be added as follows:

a. All public and private areas and all rooms for 100% full area coverage.

b. All Mechanical, Electrical, Telephone, Elevator, Generator, etc.

c. At each elevator lobby.

d. Each side of doors magnetically held open.

e. Elevator Shafts if required per code.

f. Beam pockets shall be covered as needed in order to meet current code requirements.

3. Manual pull stations shall be added as follows:

a. Next to the main remote annunciator or FACP in admin office

b. Pull stations shall be mounted 48 inches above the finished floor, as measured on handle. Pull stations currently mounted at the incorrect height shall be lowered accordingly when replaced.

c. All surface mount pull stations shall be provided w/ manufacturer's listed back box.

4. Duct Detectors shall be added as follows:

a. Supply and Return Ducts for Fans 2000 CFM and greater.

b. Smoke and Smoke/Fire Dampers. Duct Detectors shall be substituted by Area Smoke Detectors if allowable by code.

c. Remote LED's w/ test stations shall be provided for all duct detectors located above ceilings or out of sight.

d. The test stations shall be located the shortest possible distance from the duct

detector and in a location that is easily visible and accessible.

5. Heat Detectors (135 deg) shall be added as to the following:

   a. Elevator Machine Rooms

   b. Elevator Shafts if required per code.

   c. Kitchens

   d. Trash Rooms

   e. Restrooms

   f. Custodial closets

6. Heat Detectors (194 deg) fixed temperature shall be added at Attic or above ceiling space and outside locations as required by code.

7. Sprinkler tamper and water flow switches shall be individually monitored:

   a. Provide one (1) supervisory module circuit for each sprinkler valve supervisory and water flow switch.

   b. Tamper switches in fire pump room only may be grouped together as allowed per coded.

   c. Existing water flow and tamper switches may need to be re-adjusted by the contractor to meet code. Water flow/Tamper switches unable to be adjusted to meet code shall be repaired/replaced by the owner or provided as an addition to the contract.

C. Notifications Devices:

1. Temporal Speakers shall be added throughout public and private spaces to achieve 15db above ambient as needed to meet current code requirements.

2. Strobes shall be added as follows:

   a. All Corridors, Classrooms, Restrooms, Parking Garages, Elevator Lobbies and all other Common Areas.

   b. Storage areas as required by code.

c. Parking Garage covering drive path only;

i. No more than 50 linear feet apart down the center of the driveway.

ii. Mounted a maximum distance of 25 feet away from the end of the driveway.

iii. Minimum intensity shall be 110cd.

d. Strobes that are required in sleeping areas shall be located within 16 feet of pillow and have a minimum intensity of 110cd. For strobes located less than 24 inches from ceiling the minimum intensity shall be 117cd.

e. Sized per ADA coverage and NFPA 72.

f. Combination Horn/Strobes may be used as needed.

g. Additional strobes shall be added in ADA rooms as needed.

h. Areas having more than 2 strobes in the field of view shall be synchronized.

3. Booster Power Supplies shall be distributed throughout the facility to provide the power necessary for all indicating devices. Power Supplies shall be initiated by Synchronized Signal Modules.

4. Other device/controls shall be added as follows.

a. Primary, Alternate elevator recall and shunt trip shall be required for each elevator.

b. The fire alarm panel shall monitor individual Fire Pump and Emergency Generator “Run” & “Fail” status for each unit. Run & Fail Status shall report as Monitor points.

c. Interface with any door lock\card accesses release circuits. An addressable control relay shall be provided at each lock location obstructing the emergency exit path. Stairwell door locks may have one common control.

d. Interface and provide air-handling systems shutdown control. An addressable control relay shall be provided for each air handler unit.

e. Interface and provide non-managed smoke damper shutdown. Provide addressable control relays at each electrical panel where smoke dampers are powered.

f. Provide and Interface with magnetic door holder release circuits. Provide addressable control relays as required.

g. Magnetic door holders shall be provided as part of this section at elevator lobby doors and all cross-corridor doors and as required per code.

1.10 SYSTEM DESIGN PARAMETERS

A. Standby power: The standby power supply shall be an electrical battery with capacity to operate the system under maximum supervisory load for twenty four (24) hours and capable of operating the system for fifteen (15) minutes of evacuation alarm on all devices, operating at maximum load. The system shall include a charging circuit to automatically maintain the electrical charge of the battery. The system shall automatically adjust the charging of the battery to compensate for temperature.

B. Voltage Drop: The point-to-point Ohm's Law voltage drop calculations of all alarm system circuits shall not exceed 10%.

C. Spare Capacity: The system shall be engineered to accommodate 20% spare capacity on each individual loop, and 20% spare on system power supplies.

D. Circuiting Guidelines

1. Initiating Device Circuits; Where necessary, conventional initiating device circuits (i.e. water flow switches, valve supervisory switches, fire pump functions, etc.) shall be Class B (Style "A" or "B").

2. Notification Appliance Circuits; All notification appliance circuits shall be Class B. The notification circuits shall be power limited. Non-power limited circuits are not acceptable.

3. Signaling Line Circuits: Addressable Analog Devices

a. The signaling line circuit connecting to addressable/analog devices including, detectors, monitor modules, control modules, isolation modules, intrusion detection modules and notification circuit modules shall be Class B.

b. Each addressable analog loop shall be circuited so device loading is not to exceed 80% of loop capacity in order to leave for space for future devices.

4. Signaling Line Circuits: Data & Audio for FACP & Annunciator Network; The signaling line circuit connecting network panel/nodes, annunciators, command centers, shall be Class A. The media shall be copper except where fiber optic cable is specified on the drawings.

PART 2 – PRODUCTS

2.1 MANUFACTURER:

Refer to the approved plans for specific fire alarm system components.

2.2 GENERAL:

A. All equipment and components shall be the manufacturer's current model. The materials, appliances, equipment and devices shall be tested and listed by a nationally recognized approval agency for use as part of a protected premises (fire alarm) system.

B. The contractor shall provide, from the acceptable manufacturer's current product lines, equipment and components, which comply, with the requirements of these specifications. Equipment or components, which do not provide the performance and features, required by these specifications are not acceptable, regardless of manufacturer.

C. All System components shall be the cataloged products of a single supplier. All products shall be UL listed by the manufacturer for their intended purpose.

D. All control panel assemblies and connected field appliances shall be both designed and manufactured by the same company, and shall be tested and cross-listed as to ensure that a fully functioning system is designed and installed.

2.3 CONDUCTORS

A. The requirement of this section apply to all system conductors, including all signaling line, initiating device, notification appliance, auxiliary function, remote signaling, AC and DC power and grounding/shield drain circuits, and any other wiring installed by the Contractor pursuant to the requirements of these Specifications.

B. All circuits shall be rated power limited in accordance with CEC Article 760 section III.

C. Installed in conduit or enclosed raceway.

D. All new system conductors shall be of the type(s) specified herein.

E. All initiating circuit, signaling line circuit, AC power conductors, shield drain conductors and grounding conductors, shall be solid copper, stranded or bunch tinned (bonded) stranded copper.

F. All signaling line circuits, including all addressable initiating device circuits shall be 18 AWG minimum multi-conductor jacketed twisted cables or twisted shielded or as per manufacturer's requirements.

G. All non-addressable initiating device circuits, 24 VDC auxiliary function circuits shall be 18 AWG minimum or per manufacturer's requirements.

H. All audible/visual notification appliance circuits shall be 12 AWG minimum twisted pairs or twisted pairs shielded or per manufacturer's requirements.

I. Splices; No splices shall be installed in conduit, Christy boxes or any inaccessible place. All splices shall be made on terminal blocks specifically designed for that purpose in terminal cabinets or locations as specifically approved by the Engineer.

J. All underground conduit runs shall only use stranded type wires.

K. Terminal Barrier Strips; Cinch 142 series barrier strips (minimum 6 points) for Fire Alarm system. Provide minimum two (2) space separation points between types of system cables. Strips shall include provisions for up to four (4) spare termination points. Ensure that system circuits loops are located on adjacent termination points on the barrier strip.

L. Wire terminators to devices and on terminal barrier strips shall be with “spade” type terminal connections (Thomas and Betts Sta-Kon or Engineer approved equivalent). Contractor shall use an approved Thomas and Betts Sta-Kon lugging tool.

M. All cables shall be labeled with Panduit Label, size MP-150c thru MP-350. The size will depend on the amount of information needed on each label. All labels shall contain information as to the source and the destination of the wire including the location and terminal can numbers.

2.4 RACKS, TERMINALS, CABINETS AND SPECIAL ASSEMBLIES:

A. Wiring shall be neatly bundled, fanned, tagged and laced. Leave minimum three-inch horizontal wiring between terminal block connection and fan.

B. Terminate incoming (homerun) cables on left of terminal block; with cables to devices terminated on right side.

2.5 CONDUIT RACEWAY

A. All systems and system components listed to UL864 Control Units for Fire Protective Signaling Systems may be installed within a common conduit raceway system, in accordance with the manufacture's recommendations. System(s) or system components not listed to the UL864 standard shall utilize a separate conduit raceway system for each of the sub-systems.

B. The requirements of this section apply to all system conduits, raceways, electrical enclosures, junction boxes, pull boxes and device back boxes.

C. All system conduits shall be of the sizes and types specified.

D. All system conduits shall be EMT, 3/4 - inch minimum, except for flexible metallic conduit used for whips to devices only, maximum length 6 feet, 3/4-inch diameter, minimum.

E. All system conduits, which are installed in areas, which may be subject to physical damage or weather, shall be IMC or rigid steel, 3/4 -inch minimum.

F. Conduits shall be sized according to the conductors contained therein. Cross sectional area percentage fill for system conduits shall not exceed 40%.

G. Existing conduit raceway system may be re-used where possible.

H. All fire alarm conduit systems shall be routed and installed to minimize the potential for physical, mechanical or by fire damage, and so as not to interfere with existing building systems, facilities or equipment, and to facilitate service and minimize maintenance.

I. All conduits, except flexible conduit whips to devices, shall be solidly attached to building structural members, ceiling slabs or permanent walls. Conduits shall not be attached to existing conduit, duct work, cable trays, other ceiling equipment, drop ceiling hangers/grids or partition walls, except where necessary to connect to initiating, notification, or auxiliary function devices.

J. All system conduits, junction boxes, pull boxes, terminal cabinets, electrical enclosures and device back boxes shall be readily accessible for inspection, testing, service and maintenance.

K. All penetration of floor slabs and firewalls shall be sleeved (1" conduit minimum) fire stopped in accordance with all local fire codes.

L. All junction box covers shall be painted red.

PART 3 – EXECUTION

1.1 INSTALLATION

A. All equipment and components shall be installed in strict compliance with each manufacturer's recommendations. Consult the manufacturer's installation manuals for all wiring diagrams, schematics, physical equipment sizes, etc. before beginning system installation.

B. The entire system shall be installed in a workmanlike manner, in accordance with approved manufacturer's wiring diagram.

1.2 REQUIREMENTS

A. All new manual pull stations shall be mounted 48 inches above the finished floor, as measured on handle.

B. All new audio/visual devices shall be mounted at a minimum of 80 inches and no more than 96 inches above the finished floor, as measured on strobe center. Devices shall be mounted no less than 6 inches from the ceiling.

C. No area smoke detectors shall be mounted within 36 inches of any HVAC supply, return air register or lighting fixture.

D. No area smoke or heat detector shall be mounted within 12 inches of any wall.

E. All fire alarm devices shall be accessible for periodic maintenance. Should a device location indicated on the Contract Drawings not meet this requirement, it shall be the responsibility of the installing contractor to bring it, in writing, to the attention of the Project Engineer. Failure to bring such issues to the attention of the Project Engineer shall be the exclusive liability of the installing Electrical Contractor.

F. End of Line Resistors shall be furnished as required for mounting as directed by the manufacturer. Devices containing end-of-line resistors shall be appropriately labeled. Devices should be labeled so removal of the device is not required to identify the EOL device. Wear the end of line resistors are not part of the device then they should be located in terminal cans or cabinets as required.

G. All addressable modules shall be mounted within 36 inches of the monitored or controlled point of termination. This shall include, but is not necessarily limited to, fan shutdown, elevator recall, shunt trip, sprinkler status points, or door release. Label all addressable modules as to their function.

H. All wiring shall be color-coded throughout, to National Electrical Code standards.

I. Power-limited/Non-power-limited CEC wiring standards SHALL BE OBSERVED.

J. Auxiliary relays shall be appropriately labeled to indicate “FIRE ALARM SYSTEM” and their specific function (i.e. FAN S-1 SHUTDOWN).

1.3 TEST & INSPECTION

A. All fire alarm testing shall be in accordance with National Fire Alarm Code, NFPA 72 - 2019.

B. The system shall be pre-tested and documented prior to the final inspection by the AHJ. The owner shall be notified of the pretest 48 hours in advance and shall witness this test if desired.

C. The pre-test shall include the following:

1. All intelligent analog addressable devices shall be tested for current address, sensitivity, and user defined message.

2. All wiring shall be tested for continuity, shorts, and grounds before the system is activated.

3. Proper operation and execution of all its sequences

D. Upon completion of the new system or an upgrade to an existing system, the contractor shall provide a minimum of two personnel for testing. Testing shall be done in the presence of an assigned Fresno Unified School District employee. The contractor shall provide reasonable notification prior to scheduling of any tests, so that Fresno Unified personnel can be in attendance. At the final test and inspection, a factory-trained representative of the system manufacturer shall demonstrate to the Owner, his representative, and the local fire inspector all its sequence of operations and any additional tests required by the AHJ. In the event the system does not operate properly, the test may be terminated. Corrections shall be made and the testing procedure shall be repeated until it is acceptable to the Owner, his representatives and the fire inspector. If the Fire Marshall Is required to be present during testing, it shall be the contractor’s responsibility to notify the fire department having jurisdiction.

1.4 TRAINING:

A. The System Supplier shall schedule and present a minimum of (2) 4-hour segments of documented formalized instruction for the building owner, detailing the proper operation of the installed System. One training segment shall be available at the completion of the project. The second training segment may be required within the warranty period.

B. The instruction shall be presented in an organized and professional manner by a person factory trained in the operation and maintenance of the equipment and who is also thoroughly familiar with the installation.

C. The instruction shall cover the schedule of maintenance required by NFPA 72 and any additional maintenance recommended by the system manufacturer.

D. Instruction shall be made available to the Local Municipal Fire Department if requested by the Local Authority Having Jurisdiction.

1.5 SYSTEM UPGRADES:

A. When upgrading an existing system, the existing fire alarm shall be tested in the presence of a Fresno Unified employee prior to any work being started by a contractor. Upon completion of testing, it shall be the contractor's responsibility to note any discrepancy with the existing system. It will be contractor's responsibility to provide and complete working system, minus any discrepancies noted.

B. When upgrading an existing system, all end of line resistors shall be changed out to meet manufacturer's specifications for each individual fire panel. The contractor shall make a reasonable effort to locate the end of line resistors. If locations cannot be determined Fresno Unified shall provide assistance to the contractor.

C. When specifications call for a zone to be added, the contractor shall provide all equipment and terminations to make a completed working system, including all equipment necessary to annunciate the system to Fresno Unified's central station. It will be the contractor's responsibility to ensure that the equipment has sufficient space to accommodate extra zones.

D. When specifications call for the removal of existing equipment all equipment shall be returned to Fresno Unified School District's Electronics Shop.

END OF SECTION

SECTION 312000– EARTHWORK

PART 1 - GENERAL

1.1 SUMMARY

A. This Section includes the following:
   1. Provide all material, labor, equipment and services necessary to do all Earthwork and other related items necessary to complete the Project as indicated by Contract Documents unless specifically excluded.

B. Related Sections: The following Project Manual Sections contain requirements that relate to this section:
   1. ALL DIVISION 00 SPECIFICATION SECTIONS.
   2. ALL DIVISION 01 SPECIFICATION SECTIONS.
   3. 03 11 01 CONCRETE FORMWORK
   4. 03 20 00 REINFORCEMENT
   5. 03 30 00 CAST-IN-PLACE CONCRETE
   6. 31 31 00 SOIL TREATMENT
   7. 32 12 00 PAVEMENT
   8. ALL SPECIFICATION SECTIONS IN THE FACILITY SERVICES SUBGROUP.
   9. ALL SPECIFICATION SECTIONS IN THE SITE AND INFRASTRUCTURE SUBGROUP.

1.2 SUBMITTALS

A. Submit in accordance with Specification Section - SUBMITTAL PROCEDURES:
   1. Product Data:
      a. Information indicating the source of all import material, the fill material type and where it is to be used.
   2. Project Closeout: In accordance with Specification Section – PROJECT CLOSEOUT.
      a. Drawings indicating the extent and depth of all engineered fill. This information shall be a part of the Project "As-Built" and Project "Record" Documents in accordance with the Specification Section – PROJECT DOCUMENTS.

1.3 QUALITY ASSURANCE

A. Qualifications:
   1. Installer:
      a. Engage an experienced Installer who has successfully completed three (3) projects of similar scope and size to that indicated for this project.

B. Regulatory Requirements:
   1. In accordance with Specification Section - REGULATORY REQUIREMENTS and the following:
      a. AHJ Authority Having Jurisdiction

b. CAL/OSHA Comply with all provisions of the Construction Safety Orders and the General Safety Orders of the California Division of Occupational Safety and Health, as well as all other applicable regulations as they pertain to the protection of workers from the hazard of caving ground excavations.
c. CARB Materials and equipment used for this Project shall comply with the current applicable regulations of the California Air Resources Board (CARB)and the Environmental Protection Agency (EPA), in the area where the project is located.
d. COF City of Fresno, Standard Drawings and Specifications, latest edition.
e. COF County of Fresno, Standard Drawings and Specifications, latest edition.
f. DTSC California Department of Toxic Substances Control.
g. EPA Environmental Protection Agency.
h. FMFCD Fresno Metropolitan Flood Control District.

C. Certificates:
1. Installer's certification that all Earthwork installation meets or exceeds the requirements of this specification.
2. Contractor's certification (on Contractor's letterhead paper) that the Earthwork materials and installation meets or exceeds the requirements of this specification.
3. Contractor and Supplier of imported material shall certify that the soils do not contain any environmental contaminates regulated by Local, State or Federal Agencies.

D. Meetings:
1. Pre-Installation: Schedule prior to the start of work.
a. Coordinate the work with other work being performed.
b. Identify any potential problems that may impede planned progress and proper installation of work regarding quality of installation and warranty requirements.
2. Progress: Scheduled by the Contractor during the performance of the work.
a. Review for proper installation of work progress.
b. Identify any installation problems and acceptable corrective measures.
c. Identify any measures to maintain or regain project schedule if necessary.
3. Completion: Scheduled by the Contractor upon proper completion of the work.
a. Inspect and identify any problems that may impede issuance of warranties or guaranties.
b. Maintaining installed work until the Notice of Substantial Completion has been executed.

1.4 PROJECT CONDITIONS

A. Existing Conditions:
1. Examine site and verify conditions with the Drawings and Specifications.
2. Thoroughly investigate and verify conditions under which the Work is to be performed.
3. Locate and identify utilities:
a. Call a Local Utility Locater Service (USA - "Underground Service Alert") for the task of locating any applicable off-site and on-site utilities in the area where the Project is located.
4. No allowance for extra Work will be granted resulting from negligence or failure to meet requirements of Article titled "Existing Conditions" above.

B. Environmental Requirements:

1. Dust control: Perform work in a manner as to minimize the spread of dust and flying particles. Thoroughly moisten all surfaces as required to prevent dust from being a nuisance to the public, neighbors and concurrent performance of other on-site work.
   a. All disturbed areas, including storage piles, which are not being actively utilized for construction purposes, shall be effectively stabilized of dust emissions using water, chemical stabilizer/suppressant, or vegetative ground cover.
   b. All on-site unpaved roads shall be effectively stabilized of dust emissions using water or chemical stabilizer/suppressant.
   c. All land clearing, grubbing, scraping, excavation, land leveling, grading, and cut and fill activities shall be effectively controlled of fugitive dust emissions utilizing application or water or by presoaking.
   d. When materials are transported off-site, all material shall be covered, effectively wetted to limit visible dust emissions or at least six inches of freeboard space from the top of the container shall be maintained.
   e. All operations shall limit or expeditiously remove the accumulation of mud or dirt from adjacent public streets at least once every 24 hours when operations are occurring. The use of dry rotary brushes is expressly prohibited except where preceded or accompanied by sufficient wetting to limit the visible dust emissions. The use of blower devices is expressly forbidden.
   f. Following the addition of materials to, or the removal of materials from, the surface of outdoor storage piles, said piles shall be effectively stabilized of fugitive dust emissions utilizing sufficient water or chemical stabilizer/ suppressant.
2. Burning: No burning will be allowed on-site.
3. Rain: Work under this section shall not be started or maintained under threat of rain, unless the work is not affected by the rain.
4. Do not place fill during weather conditions which will alter moisture content of fill materials sufficiently to make compaction to the specified densities difficult or impossible.
5. When reference is made to SWPPP (Storm Water Pollution Prevention Plan, if any within this Project Manual), then comply with all environmental protection requirements included therein.
6. In accordance with EPA and AHJ.

C. Protection:
1. Protect cut and fill areas to prevent water running into excavation. Maintain areas free of water. Remove seeping water immediately by pumps.
2. Protect cut slopes from erosion due to precipitation and other sources of runoff.
3. Protect utilities to remain within the construction area and special construction. If utility lines are uncovered (water, electric, sewer, etc.) not shown on the drawings during excavation of site, notify the Architect promptly for its review and action.
4. Do not permit access to undeveloped portions of the site, nor to areas that are outside of the limits of grading.

PART 2 - PRODUCTS

2.1 MATERIALS

A. Locator Tape:

1. Tape shall be an inert material such as polyethylene plastic with a metallic core, and highly resistant to alkalis, acids, or other chemical components likely to be encountered in soils. The tape shall be bright colors for contrast with the soils with identifying print in black letters. The tape shall be 6 inches wide and installed over all of the pipelines as shown on the drawings.

B. Earth Fill:
1. Fill shall consist of non-hazardous, non-expansive, low corrosivity and predominantly granular material composed of a reasonably well graded mixture of hard inert mineral fragments, approved by the Geotechnical Engineer.
2. Free of brush, roots, sod, rubbish or other organic materials or clay.
3. Free of rocks **3 inches** or larger in greatest dimension. Not more than **15 percent** larger than **2-1/2 inches**. Remove rock or stones, which may interfere with the action of compacting equipment.
4. Materials excavated from the site below the top **twelve (12)** inches may be used, subject to approval by the Geotechnical Engineer.
   a. On-Site materials shall be in accordance with Earth Fill paragraph within this specification section, and remove all roots **1/4 inch** in diameter or larger.
   b. The moisture content of the soil shall be within two percent of optimum moisture content at the time of placement.
5. Imported soil shall be predominantly granular material, as described in PART 2 paragraph titled IMPORT MATERIAL.

C. Engineered Fill:
1. All Engineered Fill shall be in accordance with Earth Fill paragraph in this specification section.
2. Import Material:
   a. Import Material to be used as Engineered Fill shall have the consistency as follows:
      1) Percent Passing 3-inch Sieve 100
      2) Percent Passing No. 4 Sieve 60-100
      3) Percent Passing No. 200 Sieve 10-40
      4) Plasticity Index Less than or Equal to 8
      5) Expansion Index Less than 10
      6) “R Value (for fill placed in pavement areas only) Minimum 25
   b. The Contractor shall be responsible for securing an acceptable source of import material with the approval of the Geotechnical Engineer prior to transport to the site.
   c. All import material shall meet the standards and criteria of DTSC for environmentally clean soil suitable for school construction.
3. Materials excavated from the site below the top **twelve (12) inches** inches may be used, subject to approval by the Geotechnical Engineer:
   a. On-Site soils shall be in accordance with Engineered Fill paragraph in this specification section and remove all roots 1/4 inch in diameter or larger.

D. Back Fill:
1. In accordance with Article titled "Earth Fill" above, within this specification section.
   a. Lean Concrete: Refer to Specification Section – CAST-IN-PLACE CONCRETE.
2. Mechanical and Plumbing Utility Trench Back Fill shall be soil in accordance with "Earth Fill" paragraph within this specification section, unless indicated otherwise within this Project Manual.

3. Electrical Utility Trench Back Fill shall be sand in accordance with "Sand Fill" (for Electrical Trenches) paragraph within this specification section, unless indicated otherwise within this Project Manual.

E. Sand Fill:
1. Sand to be washed and of natural siliceous or igneous origin, having hard, strong, and durable particles.
2. Sand shall comply with ASTM C 33 "Standard Specification for Concrete Aggregates", generally as follows:
   a. Percent passing 3/8 inch sieve: 100%.
   b. Percent passing No. 4 sieve: 95 to 100%.
   c. Percent passing No. 50 sieve: 10 to 30%.
   d. **Percent passing No. 100 sieve: 2 to 10%.**

F. Finish Fill:
1. Predominately granular material composed of a reasonably, well-graded mixture of hard inert mineral fragments approved by Geotechnical Engineer.
2. Shall be topsoil free of brush, roots, sod, rubbish or other organic materials.
3. Free of rocks **1/2 inch** or larger and not more than **15 percent.**
4. Topsoil stripped from the top **twelve (12)** inches from the site may be re-used subject to approval by the Geotechnical Engineer.
   a. On-Site topsoil shall be in accordance with Finish Fill paragraph in this specification section.

2.2 SOURCE QUALITY CONTROL

A. Tests, Inspection:
1. Material Test Reports: Performed by the Owner's Testing Laboratory agency in accordance with the Specification Section – TESTING LABORATORY SERVICES, indicating and interpreting test results for compliance of the following with requirements:
   a. Classification according to ASTM D 2487 "Practice for Classification of Soils for Engineering Purposes (Unified Soil Classification System)", of each on-site and import soil material proposed for fill and backfill.
   b. Laboratory compaction curve according to ASTM D 1557 "Test Methods for Laboratory Compaction Characteristics of Soil Using Modified Effort (56,000 ft.-lb./sq.ft.)", for each on-site and import soil material proposed for fill and backfill.
2. Material Test Reports: Performed by the Contractor's Testing Laboratory agency in accordance with the Specification Section – TESTING LABORATORY SERVICES, indicating and interpreting test results for compliance of the following with requirements:
   a. Imported soil: Test report showing import fill dirt chemicals are within allowable DTSC standards.

PART 3 - EXECUTION

3.1 EXAMINATION

A. Site verification of conditions:

1. Prior to the execution of the work under this specification section, inspect the installed work executed under other sections of this Project Manual, which affect the execution of work under this specification section.
2. Report unacceptable conditions to the Architect. Do not begin work until unacceptable conditions have been corrected.
3. Execution of work under this specification section shall constitute acceptance of existing conditions.

3.2 PREPARATION:

A. Layout of Work:
1. Contractor shall be responsible for all lines and grades.
2. Check all bench marks, monuments and property lines and verify locations.
3. Locate and maintain all grade stakes.
4. Monuments moved or displaced during grading operation are to be replaced by a California Registered Civil Engineer or Surveyor, at Contractor's expense.

B. Coordination:
1. Coordinate work under this specification section with work specified under other specification sections to ensure proper and adequate interface of work.
2. If this project contains a STORM WATER POLLUTION PREVENTION PLAN (SWPPP), coordinate with the requirements of that section for protection of the site and adjacent properties.

C. Protection:
1. Protect and maintain all benchmarks and survey control points from disturbance during clearing and demolition operations.
2. Provide erosion-control measures to prevent soil erosion and discharge of soil-bearing water runoff or airborne dust to adjacent properties and walkways.
3. Protect existing improvements designated to remain from damage during construction.
   a. Restore damaged improvements to their original condition, as acceptable to the Owner.
   b. Support exiting fences as required, where site earthwork operations are near existing fence posts or footings.

D. Surface Preparation:
1. Stripping:
   a. Remove all topsoil, vegetation, organics and debris from entire project site. Remove to a minimum of stripping depth of **twelve (12) inches**.
   b. Stockpile stripped topsoil suitable to be re-used as Finish Fill for:
      1) If more than 12" of fill is being set at site it will need inspection.
      2) Landscape areas.
      3) Stripped topsoil is not suitable for use as Earth Fill and Engineered Fill.
2. Removal of loose or organic soils resulting from Specification Section – CLEARING AND DEMOLITION.
   a. All loose or organic materials resulting from excavations and removal of:
      1) Irrigation lines.
      2) Trees.
      3) Vineyards.
      4) Wells.

5) Debris pits.
6) Uncontrolled fills.
7) Existing above and below grade improvements shall be removed.

b. Expose undisturbed native soils, scarify to a minimum depth of **six (6)** inches, then compact as Engineered Fill.

c. At locations where the existing ground slope exceeds a ratio of 4:1 (horizontal to vertical ratio), the existing ground surface must be "benched" as directed by the Geotechnical Engineer, prior to placing fill material.

d. Backfill with Engineered Fill at building areas, exterior pavement areas, concrete slab areas and improvement structures.
   1) Backfill with Earth Fill at Landscape and Athletic Field areas.

3.3 CONSTRUCTION

A. Over-excavation:
1. Stockpile excavated on-site soils suitable to be re-used as Earth Fill or Engineered Fill.
2. Remove all unsuitable excavated material.

B. Scarification and Compaction:
1. Scarification and Compaction shall occur after over-excavation operations.
2. The exposed grade in areas to receive Earth Fill and Engineered Fill shall be scarified to a minimum depth of **six (6) inches**.
3. Moisture condition to within **two (2)** percent of optimum moisture content.
4. Compact to at least **ninety-two (92)** percent of the maximum dry density in accordance with ASTM D 1557 "Test Methods for Laboratory Compaction Characteristics of Soil Using Modified Effort (56,000 ft.-lb./sq.ft.)".

C. Placing Earth Fill:
1. Shall occur after scarification and compaction operations.
2. Spread Earth Fill in successive layers that will result in compacted layers **six (6) inches** thick maximum.
3. Moisten or dry Earth Fill to obtain optimum moisture content for compaction. Add water as required to obtain uniform distribution of water to each layer. Disc soil to thoroughly mix after water is added.
4. Compact Earth Fill to a density of not less than **ninety-two (92)** percent in accordance with ASTM D 1557 "Test Methods for Laboratory Compaction Characteristics of Soil Using Modified Effort (56,000 ft.-lb./sq.ft.)".
5. Compaction by ponding and jetting shall not be permitted.
6. Contractor shall be responsible for selection of equipment used for compaction, and for obtaining specified fill density.
7. Costs of initial compaction tests shall be borne by the Owner. Contractor shall pay for all re-tests required due to failure of initial tests.

D. Placing Engineered Fill:
1. Shall occur after scarification and compaction operations.
2. Place Engineered Fill in accordance with article titled "Placing Earth Fill" within this specification section.
3. As a minimum, extend to **five (5) feet** beyond the perimeter of the footprint of each:
   a. Respective building area.
   b. Exterior pavement areas.

c. Concrete slab areas.
d. Improvement structures.

4. Preparation of sub-grade and selection and placing of Engineered Fill subject to continuous inspection and supervision of Geotechnical Engineer.
5. Compact Engineered Fill to a density of not less than **ninety-two (92)** percent, but not more than **ninety-five (95)** percent, in accordance with ASTM D 1557 "Test Methods for Laboratory Compaction Characteristics of Soil Using Modified Effort (56,000 ft.-lb./sq.ft.)". Density of each layer of Engineered Fill shall be tested and verified that it meets required density of Geotechnical Engineer prior to placing succeeding layer.
   a. Compact top **eight (8) inches** of Engineered Fill a density of not less than **ninety-five (95)** percent in accordance with Test Designation ASTM D 1557 "Test Methods for Laboratory Compaction Characteristics of Soil Using Modified Effort (56,000 ft.-lb./sq.ft.)" at:
      1) Dedicated fire access areas.
      2) Parking areas.
      3) Driveway areas.
      4) Playcourt areas.
6. Roll Engineered Fill under interior and exterior slabs to smooth surface, free of large or sharp particles.
7. Conduct work to minimize inspection costs.
8. When testing agency reports that sub-grades, fills, or backfills have not achieved degree of compaction specified, scarify and moisten or aerate, or remove and replace soil to depth required; re-compact and retest until specified compaction is obtained

E. Excavation for Formwork:
1. Excavate for footings to depth and width indicate on the drawings or within these specifications.
2. Protect top corners of trenches against sloughing.
3. Side forms at footings may be omitted if excavation stands without caving. Make footing trench **two (2) inches** wider than width of concrete footing indicated on the drawings, when earth is used as a form. Cut trenches true and straight. Make side cuts neat and plumb. Bottom of trenches shall be level with reasonably sharp corners.
4. When forms are required at footings, allow additional space for construction and inspection.
5. Provide means to accurately position and secure sill bolts, tie downs, reinforcing, and all other inserts in concrete.
6. Footings to bear on firm soil, as determined and approved by the Geotechnical Engineer.
7. Notify the Architect if unsuitable bearing is encountered at depths indicated. After review and approval of the Architect and Geotechnical Engineer, continue excavation.
8. Fill trenches excavated below indicated depths on drawings with concrete to required elevations. Concrete shall be in accordance with Specification Section - CAST-IN-PLACE CONCRETE.

F. Trenching for Piping or Conduit:
1. Cut trenches true and straight. Make sides with neat cut. Bottom of trenches shall be uniform and in conformance with laying piping.
2. Cut trenches wide enough to provide sufficient working space.
3. Piping or conduit to bear on firm soil. Notify the Architect if unsuitable bearing is encountered at depths indicated on the drawings.

a. Sub-Base Support: Where installation of sub-base material is indicated, excavate to depth indicated or, if not otherwise indicated, a minimum of **six (6) inches** below bottom of work to be supported.
b. Excavate by hand below belling so that piping bears continuously on firm soil.

4. Fill trenches excavated below required depths to required depths with Sand Fill, Earth Fill or Back Fill as required in accordance with article titled "Placing Back Fill" within this specification section.
   a. Lean concrete shall be used as Back Fill where Utility Trenches extending from the exterior to the interior limits of building. Lean concrete shall extend a minimum distance of **two (2) feet** laterally on each side of the exterior building line and a minimum of **six (6) inches** above footing penetration.

G. Protection of Excavations:
1. Provide all shoring and bracing as required and those codified in local, state or federal safety regulations.
   a. OSHA Health and Safety Standards for Excavations.
   b. Any other successor regulations.
2. Prevent water, caving, or sloughing from entering excavation.
3. Maintain excavations free of water.

H. Placing Back Fill:
1. Remove all debris, wood, paper and deleterious materials from excavations before placing Back Fill.
2. Do not backfill against foundation wall without Architect's approval and not until forms have been removed. Place Back Fill on each side simultaneously or brace one side.
3. Do not Back Fill over piping until piping has been tested, inspected and approved.
4. Place Back Fill in accordance with article titled "Placing Earth Fill" within this specification section, or in accordance with article titled "Placing Engineered Fill" within this specification section, when Back Fill occurs within limits of Engineered Fill.
   a. Compact around the lower haunches of piping without disturbing the pipe's line and grade.
   b. Compact the fill to **ninety-two (92)** percent minimum **twelve (12) inches** above pipe or to **twenty-four (24) inches** of required grade, whichever is greater.
   c. Compact the remainder of the fill to **ninety-two (92)** percent minimum, or as required by surface construction.
   d. All compaction shall be in accordance with ASTM D 1557 "Test Methods for Laboratory Compaction Characteristics of Soil Using Modified Effort (56,000 ft.-lb./sq.ft.)".
5. Jetting of trench backfill is not allowed.

I. Placing Finish Fill:
1. Remove debris subject to termite attack, rot, or corrosion and all other deleterious materials from areas to receive Finish Fill.
2. Place Finish Fill in Landscape and Athletic Field areas only. The maximum depth allowed is **twelve (12) inches**.
3. Place Finish Fill in maximum layers of **six (6) inches** and compact to a density of not less than **eighty-five (85)** percent in accordance with ASTM D 1557 "Test Methods for Laboratory Compaction Characteristics of Soil Using Modified Effort (56,000 ft.-lb./sq.ft.)".

J. Grading:

1. Grade to elevations as indicated on the drawings.
2. Grading shall be reasonably smooth, compacted and free from irregular surface changes.
3. Grade ditches, swales and gutters to drain readily.
4. Slope grade evenly from proposed building pads in all directions to provide drainage.
   a. Grades at exterior building walls shall slope away from the structure at a minimum slope of **2** percent for a minimum of **5 feet**, in order to prevent standing water adjacent to building foundations.
5. Protect newly graded areas. Repair impairments resulting to grading from settlement or washing and re-establish grades to the required elevations and slopes.
6. All grading shall be plus or minus **0.05 foot** of the designated grade in areas to receive concrete slabs-on-grade, other concrete improvements, and asphalt concrete paving.
   a. Finished grades in turf and planter areas shall be within plus or minus 0.05 foot of the designated grade.
7. Keep elevations of areas to be turfed **one (1) inch** below proposed adjoining walks, curbs, slabs, etc., and areas of planters **two (2) inches** below proposed improvements.
8. All grading shall be plus or minus **0.05 foot** of the designated grade in areas to receive concrete slabs-on-grade, other concrete improvements, and asphalt concrete paving.
   a. Finished grades in turf and planter areas shall be within plus or minus **0.10 foot** of the designated grade.
9. Keep elevations of areas to be turfed **two (2) inch** below proposed adjoining walks, curbs, slabs, etc., and areas of planters **three (3) inches** below proposed improvements.

3.4 FIELD QUALITY CONTROL

A. Site Tests:
   1. Required field test reports on placed fill materials. Test will be performed by the Owner's Testing Laboratory Agency in accordance with the Specification Section – TESTING LABORATORY SERVICES.
   2. Testing Agency will test compaction of soils in place according to ASTM D 1556 "Test Method for Density and Unit Weight of Soil in Place by the Sand-Cone Method"; ASTM D 2167 "Standard test Method for Density and Unit Weight of Soil in Place by the Rubber Balloon Method"; ASTM D 2922 "Standard test Methods for Density of Soil and Soil-Aggregate in Place by Nuclear Methods (Shallow Depth)"; and ASTM D 2937 "Standard Test Method for Density of Soil in Place by the Drive-Cylinder Method", as applicable. Tests will be performed at the following locations and frequencies:
      a. Paved and Building Slab Areas: At sub-grade and at each compacted fill and Back Fill layer.
      b. Foundation Wall Back Fill: At each compacted Back Fill layer.
      c. Trench Back Fill: At each compacted initial and final Back Fill layer.
   3. Costs of initial compaction tests shall be borne by the Owner. Contractor shall pay for all re-tests and re-inspection required due to failure of initial tests.

B. Inspection:
   1. As required by Regulatory Requirements.
   2. Schedule inspections and notify the Architect, Project Inspector and any other regulatory agencies of the time at least 48 hours prior to the inspection.
   3. No work shall be without the inspections required by Regulatory Requirements.
   4. Testing Agency: Owner will engage a qualified independent Geotechnical Engineering testing agency to perform field quality-control testing.

5. Allow testing agency to inspect and test sub-grades and each fill or back fill layer. Proceed with subsequent earthwork only after test results for previously completed work comply with requirements.

3.5 PROTECTION

A. Protecting Graded Areas: Protect newly graded areas from traffic, freezing, and erosion. Keep free of trash and debris.

B. Repair and reestablish grades to specified tolerances where completed or partially completed surfaces become eroded, rutted, settled, or where they lose compaction due to subsequent construction operations or weather conditions.
   1. Scarify or remove and replace soil material to depth as directed by Architect; reshape and re-compact.

C. Where settling occurs before Project correction period elapses, remove finished surfacing, back fill with additional soil material, compact, and reconstruct surfacing.
   1. Restore appearance, quality, and condition of finished surfacing to match adjacent work, and eliminate evidence of restoration to greatest extent possible.

3.6 CLEANING

A. Disposal of Surplus and Waste Materials:
   1. Remove surplus satisfactory soil material, including unsatisfactory soil, trash, and debris, and legally dispose of it off Owner's Property.

END OF SECTION

SECTION 313100– SOIL TREATMENT

PART 1 - GENERAL

1.1 SUMMARY

A. This Section includes the following:
   1. Provide all material, labor, equipment and services necessary to provide Termite Control and Herbicide, and other related items necessary to complete the Project as indicated by the Contract Documents unless specifically excluded.

B. Related Sections: The following Project Manual Sections contain requirements that relate to this section:
   1. ALL DIVISION 00 SPECIFICATION SECTIONS.
   2. ALL DIVISION 01 SPECIFICATION SECTIONS.
   3. 03 30 00 CAST-IN-PLACE CONCRETE
   4. 31 00 00 OFFSITE DEVELOPMENT
   5. 31 20 00 EARTHWORK
   6. 32 12 00 PAVEMENT
   7. 32 90 00 LANDSCAPE CONSTRUCTION
   8. 33 40 00 STORM DRAINAGE
   9. ALL SPECIFICATION SECTIONS IN THE FACILITY SERVICES SUBGROUP.
   10. ALL SPECIFICATION SECTIONS IN THE SITE AND INFRASTRUCTURE SUBGROUP.

1.2 SUBMITTALS

A. Submit in accordance with Specification Section - SUBMITTAL PROCEDURES:
   1. Product Data for each type of product specified:
      a. Include the EPA Registered Label showing the Active Ingredients and their percentages.
   2. Quality Assurance/Control Submittals:
      a. Certificates:
         1) Indicating compliance with applicable regulations for all products, signed by product manufacturer.
         2) Installers Qualification for products specified.
      b. Manufacturer's written Instructions for each type of product specified:
      c. Test reports:
         1) Soil Treatment application.
   3. Closeout Submittals:
      a. Project Record Documents in accordance with Specification Section - PROJECT DOCUMENTS.
         1) Identify and accurately locate extent of treatment on the Site Plans.
      b. Warranty in accordance with Specification Section - WARRANTIES.
         1) Special Warranty specified within this specification section.

1.3 QUALITY ASSURANCE

A. Qualifications:
   1. Material Qualifications:
      a. All products shall comply with all applicable EPA regulations and standards in the place where the Project is located, and in effect at the time of application.
      b. Obtain termite control products from a single manufacturer for each product.
   2. Installer Qualifications:
      a. A specialist who is EPA approved and licensed according to regulations of authorities having jurisdiction to apply termiticides and herbicides in the jurisdiction where the project is located.

B. Regulatory Requirements:
   1. In accordance with Specification Section - REGULATORY REQUIREMENTS and the following:
      a. CARB Materials and equipment used for this Project shall comply with the current applicable regulations of the California Air Resources Board (CARB) and the Environmental Protection Agency (EPA), in the area where the project is located
      b. EPA Environmental Protection Agency – All Applicable Environmental Protection Regulations and Standards.
      c. USDA United States Department of Agriculture.
      d. All products will comply with the current EPA laws and California Rules and Regulations at the time of application. Should the products listed become unavailable because of changes in the law, submit substitute products in accordance with Section - SUBSTITUTION PROCEDURES for review by the Architect.

C. Meetings:
   1. Pre-Installation: Scheduled by the Contractor prior to the start of work.
      a. Coordinate the work with other work being performed.
      b. Identify any potential problems, which may impede planned progress and proper installation of work regarding quality of installation and warranty requirements.
   2. Progress: Scheduled by the Contractor during the performance of the work.
      a. Review for proper installation of work progress.
      b. Identify any installation problems and acceptable corrective measures.
      c. Identify any measures to maintain or regain project schedule if necessary.
   3. Completion: Scheduled by the Contractor upon proper completion of the work.
      a. Inspect and identify any problems that may impede issuance of warranties or guaranties.
      b. Maintain installed work until the Notice of Substantial Completion has been executed.

1.4 PROJECT CONDITIONS

A. Environmental requirements:
   1. To ensure penetration, do not treat soil that is water saturated or frozen. Do not treat soil while precipitation is occurring. Comply with requirements of the EPA-Registered Label and requirements of authorities having jurisdiction.

B. Existing Conditions:
   1. Examine site and compare it with the drawings and specifications. Thoroughly investigate and verify conditions under which the work is to be performed. No allowance will be made for extra work resulting from negligence or failure to be acquainted with all available information concerning conditions necessary to estimate the difficulty or cost of the work.
   2. Conduct work so as not to interfere unnecessarily with adjacent roads, streets, drives and walks.

1.5 SEQUENCING AND SCHEDULING

A. Coordination:
   1. Coordinate soil treatment application with excavating, filling, grading, and concrete operations. Treat soil under footings, grade beams, and ground-supported slabs before construction.

1.6 WARRANTY

A. Contractor's General Warranty:
   1. In accordance with Specification Section - WARRANTIES.

B. Manufacturer’s Warranty:
   1. Manufacturer's standard form, signed by Applicator and Contractor certifying that termite control work, consisting of applied soil termiticide treatment, will prevent infestation of subterranean termites. If subterranean termite activity or damage is discovered during warranty period, re-treat soil and repair or replace damage caused by termite infestation.
   2. In accordance with manufacturer's written standard warranty:
      a. Warranty Period Five (5) Years.
         1) From the date of Substantial Completion.

C. Installer's Warranty:
   1. In accordance with the terms of the Specification Section - WARRANTIES:
      a. Warranty period One (1) Year.

PART 2 - PRODUCTS

2.1 MANUFACTURERS

A. These products listed herein establish the size, pattern, color range and function selected by the Architect for this Project. Manufacturers that are listed as acceptable alternative manufacturers and substitutions must still comply with the requirements of this project and the products listed in order to be approved as an equivalent during the Submittal Process. If the acceptable alternative manufacturers listed or substitutions are not approved during the Submittal Process due to non-compliance with the contract documents, then the Contractor shall submit product specified.
   1. Specified termiticide product manufacturer:
      a. BAYER CORPORATION "PREMISE 75".

b. BASF CORPORATION "TERMIDOR SC".
c. AMVAC "WISDOM TC FLOWABLE".

B. Products from other manufacturers not listed must submit in accordance with Specification Section - SUBSTITUTION PROCEDURES.

2.2 MATERIALS

A. Termiticide:
1. PREMISE® 75 insecticide in water soluble packets as manufactured by BAYER CORPORATION, delivered in a minimum of a 0.1 percent solution as indicated by the label and in accordance with local environmental regulations, or approved equivalent.
a. Active Ingredients:
1) Imidacloprid, 1-((6-Chloro-3-pyridinyl)methyl)-*N*-nitro-2-imidazolidinimine 75.0 percent.
2) Inert Ingredients: 25.0 percent.
3) Total: 100.0 percent.
2. TERMIDOR SC Termiticide
3. /Insecticide to use at 0.06 percent - 0.125 percent finished solution. The 0.06 percent should be used in typical control situations.
a. Active Ingredients:
1) Fipronil: 5 amino-1-(2,6 dichloro-4-(trifluoromenthyl)(phenyl)-4-((1,R,S)-(trifluoromethyl) sulfinyl)-1-H-pyrazole-3-carbonitrile 9.1 percent.
2) Inert ingredients 90.9 percent.
4. WISDOM TC Flowable use a 0.06 percent emulsion for subterranean Termites.
a. Active Ingredients:
1) Bifenthrin 7.9 percent.
2) Other ingredients 92.1 percent.

B. Herbicide:
1. Commercial chemical for weed control registered by the EPA and the State of California. Provide granular, liquid, or wettable powder form.

PART 3 - EXECUTION

3.1 EXAMINATION

A. Termiticide:
1. Examine substrates, areas, and conditions, with Applicator present, for compliance with requirements for moisture content of soil, interfaces with earthwork, slab and foundation work, landscaping, and other conditions affecting performance of termite control.
a. Proceed with application only after unsatisfactory conditions have been corrected.

3.2 PREPARATION

A. General: Comply with the most stringent requirements of authorities having jurisdiction and with manufacturer's written instructions for preparation before beginning application of termite control treatment. Remove all extraneous sources of wood cellulose and other edible materials such as wood debris, tree stumps and roots, stakes, formwork, and construction waste wood from soil within and around foundations.

B. Soil Treatment Preparation: Remove foreign matter and impermeable soil materials that could decrease treatment effectiveness on areas to be treated. Loosen, rake, and level soil to be treated except previously compacted areas under slabs and footings[. Termiticide may be applied before placing compacted fill under slabs if recommended in writing by termiticide manufacturer].

1. Fit filling hose connected to water source at the site with a backflow preventer, complying with requirements of authorities having jurisdiction.

3.3 APPLICATION

A. General:

1. General: Comply with the most stringent requirements of authorities having jurisdiction and with manufacturer's EPA-Registered Label for products.

B. Applying Termiticide for Pre-Construction Treatment:

1. Application: Mix soil treatment termiticide solution to a uniform consistency. Provide quantity required for application at the label volume and rate for the maximum specified concentration of termiticide per the soil conditions present, according to manufacturer's EPA-Registered Label, to the following so that a continuous horizontal and vertical termiticide barrier or treated zone is established around and under building construction. Distribute treatment evenly.
   a. Slabs-on-Grade and Basement Slabs: Under ground-supported slab construction, including footings, building slabs, and attached slabs as an overall treatment. Treat soil materials before concrete footings and slabs are placed.
      1) If the slab-on-grade construction is applied directly over the vapor retarder/barrier, then apply the termiticide just under the vapor retarder/barrier just prior to it's placement. Spray all penetrations on top of the vapor retarder/barrier after it is placed and sealed, and just prior to the placement of the concrete.
      2) If the slab-on-grade construction is applied over a sand layer laid on top of the vapor retarder/barrier, then apply the termiticide directly over the sand layer just prior to the placement of the concrete.
   b. Foundations: Adjacent soil including soil along the entire inside perimeter of foundation walls, along both sides of interior partition walls, around plumbing pipes and electric conduit penetrating the slab, and around interior column footers, piers, and chimney bases; also along the entire outside perimeter, from grade to bottom of footing. Avoid soil washout around footings.
   c. Crawlspaces: Soil under and adjacent to foundations as previously indicated. Treat adjacent areas including around entrance platform, porches, and equipment bases. Apply overall treatment only where attached concrete platform and porches are on fill or ground.

d. Masonry: Treat voids.
e. Penetrations: At expansion joints, control joints, and areas where slabs will be penetrated.

2. Avoid disturbance of treated soil after application. Keep off treated areas until completely dry.
3. Protect termiticide solution, dispersed in treated soils and fills, from being diluted until ground-supported slabs are installed. Use waterproof barrier according to EPA-Registered Label instructions.
4. Post warning signs in areas of application.
5. Reapply soil treatment solution to areas disturbed by subsequent excavation, grading, landscaping, or other construction activities following application.

C. Applying Termiticide for Post-Construction Treatment:
1. New construction shall always require Pre-Construction Treatment.
2. Only if the project involves Modernization and Termiticide
3. Treatment is required, follow product label instructions for Post-Construction Treatment.

D. Applying Herbicide Treatment:
1. Extent of Herbicide Application: Soil under all asphaltic concrete paving, including driveways, parking areas, and athletic courts.
2. Application:
a. Prepare substrate in accordance with manufacturer's written recommendations.
b. Apply Herbicide Solution over sub-base prior to application of asphaltic concrete.
c. Apply in form allowed by the EPA label.
d. Rate of Application: As recommended by the label.
e. Take all precautions to limit herbicide treatment to areas immediately under paved areas.

3.4 FIELD QUALITY CONTROL

A. Soil Treatment Application Report: After application of soil treatment is completed, submit report for Owner's record information, including the following:
1. Date and time of application.
2. Moisture content of soil before application.
3. Brand name and manufacturer of termiticide.
4. Quantity of undiluted termiticide used.
5. Dilutions, methods, volumes, and rates of application used.
6. Areas of application.
7. Water source for application.

END OF SECTION

SECTION 321200– PAVEMENT

PART 1 - GENERAL

1.1 SUMMARY

A. This Section includes the following:
   1. Provide all material, labor, equipment and services necessary to completely install all pavement materials, accessories and other related items necessary to complete the Project as indicated by the Contract Documents.

B. Related Sections: The following Project Manual Sections contain requirements that relate to this section:
   1. ALL DIVISION 00 SPECIFICATION SECTIONS.
   2. ALL DIVISION 01 SPECIFICATION SECTIONS.
   3. 02 49 19 SELECTIVE DEMOLITION
   4. 03 30 00 CAST-IN-PLACE CONCRETE
   5. 31 20 00 EARTHWORK
   6. 31 31 00 SOIL TREATMENT
   7. ALL SPECIFICATION SECTIONS IN THE FACILITY SERVICES SUBGROUP.
   8. ALL SPECIFICATION SECTIONS IN THE SITE AND INFRASTRUCTURE SUBGROUP.

1.2 REFERENCES

A. Standards:
   1. In accordance with the following standards:
   2. a. ASTM American Society of Testing and Materials
   3. b. FS Federal Specifications
   4. c. RIS Redwood Inspection Service
   5. d. SS-CDOT Standard Specifications, California Department of Transportation

1.3 SUBMITTALS

A. Submit in accordance with Specification Section – SUBMITTAL PROCEDURES:

B. Product Data.
   1. Provide technical data and tested physical and performance properties on any products provided in PART 2.
      a. Aggregate Base, Asphalt Concrete..
   2. Submit manufacturer's full color range (including any standard and premium colors) for selection by the Architect.

C. Samples.
   1. Provide 3 inch long samples of each color of Markings[and Coatings].
   2. Provide 12 inch square sample of each Geosynthetic Interlayer.

D. Quality Assurance/Control Submittals:
   1. Design Data:
      a. Provide Job-Mix Design for each proposed Job-Mix indicating aggregate gradation for the sieve sizes specified and the amount (percent by dry weight of aggregate) of asphalt to be used.
   2. Test Reports:
      a. Compaction of Aggregate base test results.
      b. In-place compacted thickness of aggregate base and asphalt paving.
      c. Stockpiled pulverized asphalt.
         1) Sieve Analysis
         2) Maximum Density/Optimum Moisture
         3) Resistance Value
   3. Certificates:
      a. Contractor's Letterhead Statement
      b. Applicator's Letterhead Statement
      c. Statement of installer’s qualifications

E. Closeout Submittals:
      a. Record Documents in accordance with Specification Section - PROJECT DOCUMENTS.
      b. Warranties:
         1) Contractor's General Warranty.
         2) Manufacturer's Warranty.
         3) Installer's Warranty.

1.4 QUALITY ASSURANCE

A. Qualifications:
   1. Installer Qualifications:
      a. Engage an experienced Installer who has successfully completed three (3) projects of similar scope and size to that indicated for this Project.
   2. Manufacturer/Supplier Qualifications:
      a. Firm experienced in successfully producing/supplying products similar to that indicated for this Project, with sufficient production/supply capacity to produce/supply required units without causing delay in the work.

B. Regulatory Requirements:
   1. In accordance with Specification Section - REGULATORY REQUIREMENTS, and the following:
      a. CARB Materials and equipment used for this Project shall comply with the current applicable regulations of the California Air Resources Board (CARB)and the Environmental Protection Agency (EPA), in the area where the project is located.

C. Certificates:
   1. Provide Contractor's Letterhead Statement certifying work provided meets or exceeds the requirements of this Section.
   2. Provide Applicator's Letterhead Statement certifying products are in accordance with the manufacturer's specifications and standards requirements.

D. Meetings:
1. Pre-Installation: Scheduled by the Contractor prior to the start of any construction or aggregate base rock preparation.
   a. Coordinate the work with all other related work being performed.
   b. Identify any potential problems that may impede planned progress and proper installation of work regarding quality of installation and warranty requirements.
   c. Review requirements of work performed by others that rely on substrates exposed by selective demolition work.
   d. Review areas where existing construction is to remain and requires protection.
   e. Review demolition waste disposal and material recycling procedures.
2. Progress: Scheduled by the Contractor during the performance of the work.
   a. Review for proper installation of work progress.
   b. Identify any installation problems and acceptable corrective measures.
   c. Identify any measures to maintain or regain project schedule if necessary.
3. Completion: Scheduled by the Contractor upon proper completion of the work.
   a. Inspect and identify any problems that may impede issuance of warranties.
   b. Maintain installed work until the Notice of Substantial Completion has been executed.

1.5 DELIVERY, STORAGE, AND HANDLING

A. Packing, shipping, handling, and unloading:
1. Products shall be handled in such a manner as to assure that they are free from defects or other damage.

B. Acceptance at Site:
1. Products must be in manufacturer's original unopened containers with labels indicating brand name, grade, source location and date of manufacture.
2. Damaged products will not be accepted.

C. Storage and protection:
1. Products shall be stored above ground on level platforms, six (6) inches above ground, allowing air circulation under stacked units.
   a. Cover materials with protective waterproof covering providing for adequate air circulation and ventilation.

1.6 PROJECT CONDITIONS

A. Environmental requirements:
1. Dust control:
   a. Perform work in a manner as to minimize the spread of dust and flying particles.
   b. Thoroughly moisten all surfaces as required to prevent dust from being a nuisance to the public, neighbors and concurrent performance of other work.
2. Burning:
   a. No burning will be allowed on-site.
3. Rain:
   a. Work under this section shall not be started or continue under threat of rain.
   b. Asphalt Concrete shall not be placed when the surface is wet or frozen.

4. Temperature:
   a. Actual selection of Asphaltic Concrete by the applicator depends on the time of the year for the application and whether or not High or Low temperature Asphaltic Concrete is used. Verify anticipated temperature ranges and verify with the Architect prior to selection.

B. Existing Conditions:
   1. Examine site and compare it with the drawings and specifications. Thoroughly investigate and verify conditions under which the work is to be performed. No allowance will be made for extra work resulting from negligence or failure to be acquainted with all available information concerning conditions necessary to estimate the difficulty or cost of the work.
   2. Conduct work so as not to interfere unnecessarily with adjacent roads, streets, drives and walks.

1.7 WARRANTY

A. Contractor's General Warranty:
   1. In accordance with Specification Section - WARRANTIES.

B. Manufacturer's Warranty:
   1. In accordance with manufacturer's written standard warranty:
      a. Warranty period One (1) Year.

C. Installer's Warranty:
   1. In accordance with the terms of the specification section - WARRANTIES, but the period of time shall be for One (1) year.

PART 2 - PRODUCTS

2.1 MANUFACTURERS

A. These products listed herein establish the size, pattern, color range and function selected by the Architect for this Project. Manufacturers that are listed as acceptable alternative manufacturers and substitutions must still comply with the requirements of this project and the products listed in order to be approved as an equivalent during the Submittal Process. If the acceptable alternative manufacturers listed or substitutions are not approved during the Submittal Process due to non-compliance with the contract documents, then the Contractor shall submit product specified.
   1. Specified walk seal product manufacturer:
      a. DALTON ENTERPRISES, INC. "Plushtex 900-14".
   2. Specified coating system product manufacturer:
      a. QUEST CONSTRUCTION PRODUCTS "StreetBond150".

B. Products from other manufacturers not listed must submit in accordance with Specification Section - SUBSTITUTION PROCEDURES.

2.2 MATERIALS

A. Aggregate Base:
   1. Three-fourths (3/4") inch grade, Class 2, in accordance with SS-CDOT Section 26, "Aggregate Bases".

B. Tack Coat:
   1. Asphaltic Emulsion:
      a. Type SSI or CSSI, slow-setting per SS-CDOT Section 94 “Asphaltic Emulsions”.

C. Primer Coat:
   1. Asphaltic Emulsion:
      a. Type SSI asphalt emulsion per SS-CDOT Section 94 "Asphaltic Emulsions" diluted with water to 5 parts water to 1 part asphaltic emulsion.

D. Asphalt Concrete:
   1. Asphalt Binder:
      a. Type PG 64-10 per SS-CDOT Section 92 "Asphalts".
   2. Aggregate:
      a. Type B in accordance with SS-CDOT Section 39 "Hot Mix Asphalt".
         1) Provide one-half inch (1/2") aggregate at playcourt, tennis and basketball courts, walkways, and playground areas.
         2) Provide three-fourths inch (3/4") aggregate at on-site parking lots, roadways, and driveways.

E. Sealers:
   1. Fog Seal:
      a. In accordance with SS-CDOT Section 37-2 "Seal Coats" and Section 94 "Asphaltic Emulsions".
         1) Section 37-2.04 "Payment" is exempt from this specification.
      b. Asphaltic emulsion shall be any of the slow setting grades.
      c. Water shall be potable.
   2. Flush Coat:
      a. In accordance with SS-CDOT Section 37-2 "Seal Coats" and Section 94 "Asphaltic Emulsions".
         1) Section 37-2.04 "Payment" is exempt from this specification.
      b. Asphaltic emulsion shall be any of the slow setting grades.
      c. Sand shall comply with material specification for fine aggregate grading in accordance with SS-CDOT Section 90-102C(3).
         1) Sand shall not contain organic material or clay.
   3. Seal Coat:
      a. In accordance with SS-CDOT Section 37-2 "Seal Coats" and Section 94 "Asphaltic Emulsions".
         1) Section 37-2.04 "Payment" is exempt from this specification.
      b. Asphaltic emulsion shall be any of the slow-setting grades.
      c. Water shall be potable.
      d. Screenings shall be [Coarse, 1/2" max.][Medium, 3/8" max.][Medium fine, 5/16" max.][Fine, 1/4" max.].
   4. Slurry Seal:

a. In accordance with SS-CDOT Section 37-3"Slurry Seal and Micro-Surfacing• " and Section 94 "Asphaltic Emulsions".
   1) Section 37-3.04 "Payment• is" exempt from this specification.
b. Asphaltic emulsion shall be either Grade QS1h anionic or Grade CQS1h cationic.
c. Water shall be potable.
d. Aggregate shall be [Type I][Type II][Type III] rock dust or sand such as plaster sand.
   1) Total Percentage Passing Sieves

SIEVE SIZE	PERCENTAGE		
	TYPE I	TYPE II	TYPE III
3/8•	--	100	100
NO. 4	100	94-100	70-90
NO. 16	60-90	40-70	28-50
NO. 18	90-100	65-90	45-70
NO. 30	40-65	25-50	19-34
NO. 200	10-20	05-15	05-15

e. Mineral filler shall be any combination of type I, II, or III cement.

F. Coating System
   1. Manufacturer's standard system formulated for exterior application on asphalt paving surfaces.
      a. Waterborne, epoxy modified acrylic coating.
      b. Shall meet the following minimum performance characteristics:
         1) Taber Wear Abrasion Dry 0.98 g/1000 cycles min.
            a) Per ASTM D 4060 "Test Method for Abrasion Resistance of Organic Coatings by the Taber Abraser".
         2) Taber Wear Abrasion Wet 3.4 g/1000 cycles min.
            a) Per ASTM D 4060 "Test Method for Abrasion Resistance of Organic Coatings by the Taber Abraser".
         3) Shore Hardness 63 type D min.
            a) Per ASTM D 2240 "Standard Test Method for Rubber Property – Durometer Hardness".
         4) Permeance 3.45 g/m. sq/hr max. (52 miles).
            a) Per ASTM D 1653 "Standard Test Methods for Water Vapor Transmission of Organic Coating Films".
      c. Color selection as indicated in attached Appendix.

PART 3 - EXECUTION

3.1 EXAMINATION

A. Site verification of conditions:
   1. Prior to the execution of the work under this specification section, inspect the installed work executed under other specification sections of this Project Manual which affect the execution of work under this specification section.
      a. Verify subgrade has been compacted to relative compaction required and is within allowable moisture content.

b. Verify gradients and elevations of base are correct.
c. Verify stockpiled pulverized asphalt is suitable for using as Class 2 aggregate base by reviewing test reports.

2. Report unacceptable conditions to the Architect. Do not begin work until unacceptable conditions have been corrected.
3. Execution of work under this specification section shall constitute acceptance of existing conditions.

3.2 PREPARATION

A. Coordination:
1. Coordinate work under this specification section with work specified under other sections to ensure proper and adequate interface of work.
2. Do not begin work until [sub-grade][existing pavement] is in a condition satisfactory to the Architect [and Geotechnical Engineer].

B. Protection:
1. Protect all adjacent surfaces from drips, spray, air pollution of surrounding environment, and other damage from work under this specification section.

C. Surface preparation:
1. Completely proof-roll subgrade and/or aggregate base to identify soft pockets and areas of excess yielding.
   a. Do not proof-roll when wet or saturated conditions exist.
   b. Excavate soft spots, unsatisfactory subgrade or base, and areas of excessive pumping or rutting and replace with compacted backfill per Specification Section - EARTHWORK or Aggregate Base.
2. Coordinate with Specification Section – SOIL TREATMENT for application of herbicides.
3. Prepare surface in accordance with manufacturer's written instructions and recommendations.
4. Clean substrates of substances (oil, grease, rolling compounds, incompatible primers, loose mill scale, etc.) which could impair bond of materials specified within this section.
5. Clean existing pavement surface of loose and deleterious material.
6. Remove existing asphalt pavement by cold milling to grades and cross sections indicated.
   a. Mill to a depth of [1-1/2 inches][2 inches][3 inches].
   b. Mill to a uniform finished surface free of excessive gouges, grooves, and ridges.
   c. Control rate of milling to prevent tearing of existing asphalt course.
   d. Repair or replace curbs, manholes, and other construction damaged during cold milling.
   e. Keep milled pavement surface free of loose material and dust.

3.3 INSTALLATION

A. General:
1. In accordance with manufacturer's instructions and recommendations unless specifically noted otherwise.
2. In accordance with approved submittals.
3. In accordance with Regulatory Requirements.

B. Layout:
   1. Lines shall be straight and true.

C. New Pavement:
   1. Aggregate Base:
      a. Install Aggregate Base over approved sub-grade.
      b. Thickness shall be as indicated.
      c. Compaction of each layer shall be not less than 95 percent as determined by Caltrans California Test Method No. 216 "Method of Test for Relative Compaction of Untreated and Treated Soils and Aggregates", in accordance with SS-CDOT.
      d. Recycled Asphalt as Aggregate Base:
         1) Remove deleterious debris, organics and pieces larger than 3 inches encountered within the stockpile before placement.
   2. Tack Coat:
      a. Apply uniformly to vertical surfaces abutting or projecting into new asphalt concrete paving at a rate of 0.05 to 0.15 gal/sq. yd including concrete curbs and utility boxes.
         1) Allow tack coat to cure undisturbed before applying asphalt concrete paving.
         2) Avoid smearing or staining adjoining surfaces, appurtenances, and surroundings. Remove spillages and clean affected surfaces.
   3. Asphaltic Concrete paving:
      a. Contact Architect [and Geotechnical Engineer] 72 hours prior to installation.
      b. Thickness shall be as indicated.
         1) Where thickness exceeds 2 inches, place in no less than two layers.
      c. Compaction Equipment:
         1) In accordance with SS-CDOT Section 39 "Hot Mix Asphalt". At small difficult areas, equipment may be altered as approved by the Architect [and Geotechnical Engineer].
      d. The completed surface shall be thoroughly compacted, free from ruts, depressions, and irregularities, and be true to grade, slope and cross-section so that no standing water occurs.
      e. Tolerances:
         1) Flatness: Maximum variation of 1/4 inch measured with a 12 foot straight edge.
         2) Thickness: Not less than specified thickness.

D. Refinish Pavement:
   1. Crack and Joint Filling:
      a. Clean cracks and joints in existing asphalt concrete pavement.
      b. Use tack coat asphaltic emulsion to seal cracks and joints less that 1/4 inch wide. Fill flush with surface of existing pavement and remove excess.
      c. Use Joint Sealant to seal cracks and joints more than 1/4 inch wide. Fill flush with surface of existing pavement and remove excess.

E. Reconstruct Pavement:
   1. Crack and Joint Filling:
      a. Clean cracks and joints in existing asphalt concrete pavement.
      b. Use tack coat asphaltic emulsion to seal cracks and joints less that 1/4 inch wide. Fill flush with surface of existing pavement and remove excess.

c. Use Joint Sealant to seal cracks and joints more than 1/4 inch wide. Fill flush with surface of existing pavement and remove excess.

2. Aggregate Base:
   a. Install Aggregate Base over approved sub-grade.
   b. Thickness shall be as indicated.
   c. Compaction of each layer shall be not less than 95 percent as determined by Caltrans California Test Method No. 216 "Method of Test for Relative Compaction of Untreated and Treated Soils and Aggregates", in accordance with SS-CDOT.
3. Tack Coat:
   a. Apply uniformly to vertical surfaces abutting or projecting into new asphalt concrete paving at a rate of 0.05 to 0.15 gal/sq. yd including concrete curbs and utility boxes.
      1) Allow tack coat to cure undisturbed before applying asphalt concrete paving.
      2) Avoid smearing or staining adjoining surfaces, appurtenances, and surroundings. Remove spillages and clean affected surfaces.
4. Asphaltic Concrete paving:
   a. Contact Architect [and Geotechnical Engineer] 72 hours prior to installation.
   b. Thickness shall be as indicated.
      1) Where thickness exceeds 2 inches, place in no less than two layers.
   c. Compaction Equipment:
      1) In accordance with SS-CDOT Section 39 "Hot Mix Asphalt". At small difficult areas, equipment may be altered as approved by the Architect [and Geotechnical Engineer].
   d. The completed surface shall be thoroughly compacted, free from ruts, depressions, and irregularities, and be true to grade, slope and cross-section so that no standing water occurs.
   e. Tolerances:
      1) Flatness: Maximum variation of 1/4 inch measured with a 12 foot straight edge.
      2) Thickness: Not less than specified thickness.

F. Patching:
   1. Crack and Joint Filling:
      a. Clean cracks and joints in existing asphalt concrete pavement.
      b. Use tack coat asphaltic emulsion to seal cracks and joints less that 1/4 inch wide. Fill flush with surface of existing pavement and remove excess.
      c. Use Joint Sealant to seal cracks and joints more than 1/4 inch wide. Fill flush with surface of existing pavement and remove excess.
   2. Aggregate Base:
      a. Install Aggregate Base over approved sub-grade.
      b. Thickness shall be as indicated.
      c. Compaction of each layer shall be not less than 95 percent as determined by Caltrans California Test Method No. 216 "Method of Test for Relative Compaction of Untreated and Treated Soils and Aggregates", in accordance with SS-CDOT.
   3. Tack Coat:
      a. Apply uniformly to vertical surfaces abutting or projecting into new asphalt concrete paving at a rate of 0.05 to 0.15 gal/sq. yd including concrete curbs and utility boxes.

1) Allow tack coat to cure undisturbed before applying asphalt concrete paving.
2) Avoid smearing or staining adjoining surfaces, appurtenances, and surroundings. Remove spillages and clean affected surfaces.

4. Asphaltic Concrete paving:
   a. Contact Architect [and Geotechnical Engineer] 72 hours prior to installation.
   b. Thickness shall be as indicated.
      1) Where thickness exceeds 2 inches, place in no less than two layers.
   c. Compaction Equipment:
      1) In accordance with SS-CDOT Section 39 "Hot Mix Asphalt". At small difficult areas, equipment may be altered as approved by the Architect [and Geotechnical Engineer].
   d. The completed surface shall be thoroughly compacted, free from ruts, depressions, and irregularities, and be true to grade, slope and cross-section so that no standing water occurs.
   e. Tolerances:
      1) Flatness: Maximum variation of 1/4 inch measured with a 12 foot straight edge.
      2) Thickness: Not less than specified thickness.

3.4 APPLICATION

A. General:
   1. In accordance with manufacturer's written instructions and recommendations unless specifically noted otherwise.
   2. In accordance with approved submittals.
   3. In accordance with Regulatory Requirements.
   4. Set plumb, level, and square.

B. Layout:
   1. Lines shall be straight and true.

C. New Pavement:
   1. Sealers:
      a. Allow Asphaltic Concrete to cure 21 days minimum.
      b. Broom clean asphaltic concrete.
      c. Apply in accordance with SS-CDOT Section 37 "Bituminous Seals"
      d. The finished surface shall be smooth and uniform in appearance.
         1) Apply Fog Seal [at all pavement] [where indicated] at the application rate of 0.02 to 0.06 gal/sq. yd.
         2) Apply Walk Seal leveling mix where indicated.
         3) Apply two Slurry Seal coats at all pavement according to approved mix design.
            a) When the first coat is dry enough to walk on without picking the material up, a second coat shall be applied without mineral filler.
            b) If existing depressions are such that the aggregate still protrudes after the second coat of asphalt based sealer has been applied, the Contractor shall apply a third coat when so directed be the Architect [and the Geotechnical Engineer].
   2. Coating System:

a. Apply two layers of base coating and two layers of top coating with a dry film thickness of 19 mil where indicated.
b. The pavement surface shall be completely dry and clean prior to application of coating system.
c. The first layer of coating shall be spray applied then broomed to work the coating material into the pavement surface. Subsequent layer applications shall be sprayed then broomed or rolled.
d. Each application of coating material shall be allowed to dry to the touch before applying the next layer.
e. Do not allow traffic until coating system has completely dried and cured.

D. Refinish Pavement:
1. Sealers:
a. Allow Asphaltic Concrete at patch conditions to cure 21 days minimum.
b. Broom clean asphaltic concrete.
c. Apply in accordance with SS-CDOT Section 37 "Bituminous Seals".
d. The finished surface shall be smooth and uniform in appearance.
e. Sealer type:
1) Apply Flush Seal asphaltic emulsion where indicated at the application rate of 0.02 to 0.06 gal/sq. yd.
a) Spread sand before asphaltic emulsion begins to set.
2) Apply Seal Coat where indicated at the application rate of 0.25-.0.35 gal/sq. yd. for medium fine screenings.
a) Spread screenings before asphaltic emulsion begins to set.
3) Apply two Slurry Seal coats [at all pavement][where indicated] according to approved mix design.
a) When the first coat is dry enough to walk on without picking the material up, a second coat shall be applied without mineral filler.
b) If existing depressions are such that the aggregate still protrudes after the second coat of asphalt based sealer has been applied, the Contractor shall apply a third coat when so directed be the Architect and the Geotechnical Engineer.
4) Apply Parking Area Seal [at all pavement][where indicated] according to approved mix design.
2. Coating System:
a. Apply two layers of base coating and two layers of top coating with a dry film thickness of 19 mil where indicated.
b. The pavement surface shall be completely dry and clean prior to application of coating system.
c. The first layer of coating shall be spray applied then broomed to work the coating material into the pavement surface. Subsequent layer applications shall be sprayed then broomed or rolled.
d. Each application of coating material shall be allowed to dry to the touch before applying the next layer.
e. Do not allow traffic until coating system has completely dried and cured.

E. Reconstruct Pavement:
1. Sealers:
a. Allow Asphaltic Concrete to cure 21 days minimum.
b. Broom clean asphaltic concrete.
c. Apply in accordance with SS-CDOT Section 37 "Bituminous Seals".

d. The finished surface shall be smooth and uniform in appearance.
e. Sealer type:
1) Apply Fog Seal where indicated at the application rate of 0.02 to 0.06 gal/sq. yd.
2) Apply Walk Seal leveling mix where indicated.
3) Apply two Slurry Seal coats where indicated according to approved mix design.
a) When the first coat is dry enough to walk on without picking the material up, a second coat shall be applied without mineral filler.
b) If existing depressions are such that the aggregate still protrudes after the second coat of asphalt based sealer has been applied, the Contractor shall apply a third coat when so directed be the Architect and the Geotechnical Engineer.

2. Coating System:
a. Apply [three layers of top coating with a total dry film thickness of 15 mil][two layers of base coating and two layers of top coating with a dry film thickness of 19 mil] where indicated.
b. The pavement surface shall be completely dry and clean prior to application of coating system.
c. The first layer of coating shall be spray applied then broomed to work the coating material into the pavement surface. Subsequent layer applications shall be sprayed then broomed or rolled.
d. Each application of coating material shall be allowed to dry to the touch before applying the next layer.
e. Do not allow traffic until coating system has completely dried and cured.

F. Patch Pavement:
1. Sealers:
a. Allow Asphaltic Concrete to cure 21 days minimum.
b. Broom clean asphaltic concrete.
c. Apply in accordance with SS-CDOT Section 37 "Bituminous Seals".
d. The finished surface shall be smooth and uniform in appearance.
e. The new asphalt concrete shall be flush with adjacent existing pavement.
f. Sealer type:
1) Apply Fog Seal where indicated at the application rate of 0.02 to 0.06 gal/sq. yd.
2) Apply Walk Seal leveling mix where indicated.
3) Apply two Slurry Seal coats where indicated according to approved mix design.
a) When the first coat is dry enough to walk on without picking the material up, a second coat shall be applied without mineral filler.
b) If existing depressions are such that the aggregate still protrudes after the second coat of asphalt based sealer has been applied, the Contractor shall apply a third coat when so directed be the Architect and the Geotechnical Engineer.

G. Markings:
1. Allow Asphalt Concrete and Seal coats to cure per manufacturers recommendations before applying paint.
2. Sweep and clean surface to eliminate loose material and dust.

3. Apply uniform, straight, and true markings with equipment designed for pavement markings. Edges and ends shall be sharp and clean
4. Apply with a minimum dry film thickness of 15 mils.
5. Colors, lengths, and widths as indicated.
   a. Width Tolerance shall be plus or minus 1/8 inch.
6. Allow markings to dry at least the minimum time specified by the applicable paint standard and not less than that recommended by the manufacturer.

3.5 REPAIR

A. Markings:
   1. Remove and replace markings that are applied at less than minimum material rates, deviate from true alignment, exceed length and width tolerances, or show light spots, smears, or other deficiencies.
   2. When removing markings avoid damage to the surface which the marking was applied. Use carefully controlled sand blasting, approved grinding equipment, or other approved method.

B. FIELD QUALITY CONTROLSite Tests:
   1. As required by local jurisdiction for off-site development.
   2. Compaction of aggregate base:
      a. Per CAL Test Method 216-00 "Method of Test for Relative Compaction of Untreated and Treated Soils and Aggregates".
   3. In-place compacted thickness:
      a. Core and measure thickness of aggregate base and asphalt paving per ASTM D 3549 "Standard Test Method for Thickness of Height of compacted Bituminous Paving Mixture Specimens".
      b. Core and measure at high and low elevation points of each road section and parking lot.
      c.
   4. Stockpiled pulverized asphalt as aggregate base:
      a. Sieve Analysis shall be performed per ASTM C 136 "Standard Test Method for Sieve Analysis of Fine and Coarse Aggregates".
      b. Maximum Density /Optimum Moisture per CAL Test Method 216-00 "Method of Test for Relative Compaction of Untreated and Treated Soils and Aggregates".
      c. Resistance Value per CAL Test Method 301” Method of Test for Determining the Resistance "R Value of Treated and Untreated Bases, Subbases and Basement Soils by the Stabilometer".
   5. Drainage:
      a. Water shall not be able to accumulate at any point and the surface shall be free to drain to drainage inlets or gutters.
      b. The paving contractor shall water flood the surface with the use of a water truck. If, after 30 minutes on a 70 degree F day, "bird baths" are evident in a depth more than 0.01 foot, the paving contractor and the Owner's representative will determine the best method of correction.
      c. A 10 foot straightedge shall be used to check for high spots and ridges. High spots and ridges out of compliance shall be reduced by a remedy determined by the paving contractor and the Owner's representative.

6. Should a section of the work be not acceptable on the basis of inadequate compaction and/or the mixture becomes loose and broken, mixed with dirt, out of tolerance, or in any other way defective, it shall be repaired or removed and replaced with fresh mixture and immediately compacted to conform to the surrounding area to the satisfaction of the Owner.

C. Inspection:
   1. As required by local jurisdiction for off-site development.
   2. Schedule inspections and notify the Architect, Project Inspector and any other regulatory agencies of the time at least 48 hours prior to the inspection.
   3. No work shall be done without the inspections required.

3.6 CLEANING

A. Clean in accordance with Specification Section - TEMPORARY FACILITIES AND CONTROLS.
   1. Clean any soiled surfaces immediately.
   2. In accordance with manufacturer’s instructions and recommendations.

3.7 PROTECTION

A. Protection from traffic:
   1. No traffic shall occur over pavement until all materials have fully cured.
   2. Maintain in a manner acceptable to manufacturer and installer.
   3. Provide barricades, warning signs, and flags as necessary to prevent traffic crossing newly applied materials.
   4. Maintain and protect installed improvements without damage or deterioration until execution of Substantial Completion.

END OF SECTION