PROJECT MANUAL FOR

ADDAMS ES NEW CLASSROOM. KINDERGARTEN, AND ADMIM BUILDINGS AND MODERNIZATION

FRESNO UNIFIED SCHOOL DISTRICT
4774 YALE AVENUE
FRESNO, CALIFORNIA 93704

PREPARED BY:

DARDEN ARCHITECTS, INC.
ARCHITECTURE•PLANNING•INTERIORS
6790 N. WEST AVENUE
FRESNO, CALIFORNIA 93711

LICENSED ARCHITECT
ANTONIO J. AVILA
No. C26235
Ren. 10-31-21
STATE OF CALIFORNIA

ARCHITECT:

REGISTERED PROFESSIONAL ENGINEER
GAYLORD R. RANSOM
No.S2386
EXPIRES
3-31-20
STRUCTURAL
STATE OF CALIFORNIA

tant

STRUCTURAL ENGINEER:

REGISTERED PROFESSIONAL ENGINEER
RYAN W. CARLSON
M34846
Exp. 6-30-20
MECHANICAL
STATE OF CALIFORNIA

MECHANICAL ENGINEER:

REGISTERED PROFESSIONAL ENGINEER
C. SCOTT DAVIDSON
E17850
ELECTRICAL
STATE OF CALIFORNIA

ELECTRICAL ENGINEER:

IDENTIFICATION STAMP
DIV. OF THE STATE ARCHITECT
APP. 02-117220 INC:
REVIEWED FOR
SS ☑ FLS ☑ ACS ☑
DATE: 01/14/20

REGISTERED PROFESSIONAL ENGINEER
LANE R. BADER
No. 47033
CIVIL
STATE OF CALIFORNIA
12/18/19
Date Signed:

REGISTERED LANDSCAPE ARCHITECT
ROBERT L. BORO-C-1811
EXP. 4/30/19
STATE OF CALIFORNIA

LANDSCAPE ARCHITECT:

CIVIL ENGINEER:

END OF SECTION

PROJECT MANUAL
TABLE OF CONTENTS

PROCUREMENT AND CONTRACTING REQUIREMENTS GROUP

DIVISION 00 - PROCUREMENT AND CONTRACTING REQUIREMENTS

INTRODUCTORY INFORMATION

PROCUREMENT REQUIREMENTS
Provided by Owner

PROCUREMENT FORMS AND SUPPLEMENTS
Provided by Owner

CONTRACTING FORMS AND SUPPLEMENTS
Provided by Owner

CONDITIONS OF THE CONTRACT
Provided by Owner

SPECIFICATIONS GROUP

GENERAL REQUIREMENTS SUBGROUP

DIVISION 01 – GENERAL REQUIREMENTS

FACILITY CONSTRUCTION SUBGROUP

DIVISION 02 – EXISTING CONDITIONS

DIVISION 03 – CONCRETE

DIVISION 04 – MASONRY

DIVISION 05 – METALS

DIVISION 06 – WOOD, PLASTICS, AND COMPOSITES

DIVISION 07 – THERMAL AND MOISTURE PROTECTION

DIVISION 08 – OPENINGS

DIVISION 09 – FINISHES

SITE AND INFRASTRUCTURE SUBGROUP

DIVISION 30 – NOT USED

DIVISION 31 – EARTHWORK

DIVISION 32 – EXTERIOR IMPROVEMENTS

DIVISION 33 – UTILITIES

DIVISION 34 – 39 – NOT USED

PROCESS EQUIPMENT SUBGROUP – NOT USED

APPENDICES

END OF SECTION

SECTION 002213.03 – SUPPLEMENTARY INSTRUCTIONS TO BIDDERS

PART 1 - GENERAL

1.1 SUMMARY

A. This Section includes the following:
   1. Supplementary Instructions to Bidders consisting of procedures and conditions for the use of documents of various types and formats for bidding of this project.

B. Related Sections: The following Project Manual Sections contain requirements that relate to this section:
   1. ALL DIVISION 00 SPECIFICATION SECTIONS.
   2. ALL DIVISION 01 SPECIFICATION SECTIONS.
   3. ALL SPECIFICATION SECTIONS IN THE FACILITY SERVICES SUBGROUP.
   4. ALL SPECIFICATION SECTIONS IN THE SITE AND INFRASTRUCTURE SUBGROUP.

1.2 DEFINITIONS

A. Hard Copy Format: Documents printed on paper medium.

B. Electronic Image Format: Electronic Files consisting of Bid Documents in an image format such as PDF's, TIFF's and etc. These files are to be READ ONLY.

1.3 SUBMITTALS

A. Submit in accordance with the following:
   1. Bidder's Usage Agreement for Bid Documents:
      a. Hard Copy Format Form.
      b. Hard Copy and Electronic Image Format Form.
   2. Bidder's Usage Agreement for Partial Documents.
      a. Partial Bid Documents Form.

PART 2 - PRODUCTS
(NOT APPLICABLE)

PART 3 - EXECUTION

3.1 SCHEDULES:

A. BIDDER'S USAGE AGREEMENT FOR BID DOCUMENTS:
   1. HARD COPY FORMAT: When the Bid Documents are being issued in a printed medium, the HARD COPY FORMAT FORM shall be used.

a. This form shall be submitted and signed as a condition of receiving Bid Documents.

2. HARD COPY AND ELECTRONIC IMAGE FORMAT: When the Bid Documents are being issued electronically, the HARD COPY AND ELECTRONIC IMAGE FORMAT FORM shall be used.
   a. This form shall be submitted and signed as a condition of receiving Bid Documents.

B. BIDDER'S USAGE AGREEMENT FOR PARTIAL BID DOCUMENTS.
1. When the Bidder is requesting additional documents which are part of the Bid Documents, the PARTIAL BID DOCUMENTS FORM shall be used.
   a. This form shall be submitted and signed as a condition of receiving Partial Bid Documents.

3.2 BIDDER'S USAGE AGREEMENT FOR BID DOCUMENTS HARD COPY FORMAT
Project Name: _____
DA Project No.: _____
I, _____, as duly authorized agent of
_____ ("Bidder") as prospective bidder on the above named project ("Project") is requesting a copy of the project BID DOCUMENTS (bidding requirements, contract requirements, specifications, contract drawings, resource drawings if any, and addenda to date).
Bidder's Usage Agreement:

A. Bidder is being provided copies of Bid Documents for the Project in a Hard Copy Format, acknowledges that Bid Documents are being provided as the official record set of documents issued for bidding. It is the Bidder's responsibility to review and obtain all information from the Bid Documents necessary for a complete and accurate bid. This request is subject to the following conditions, which the Bidder hereby agrees to abide by:

B. Bidder shall pay a refundable deposit for the Bid Documents in the amount of $_____ per set. In the event the Bidder is not the successful bidder, the bidder agrees to return all Bid Documents within 15 calendar days after the bid date. If the Bid Documents are not returned within 15 calendar days after the bid date, the Bidder will forfetit the deposit.

C. Bidder acknowledges that these Bid Documents will be re-issued as Construction Documents following the bid. The Bidder agrees to return all Bid Documents in "Good Condition" with all the sheets unmarked and in their original order. The returned Bid Documents will be reviewed and the condition of the Bid Documents will be determined. If the Bid Documents are determined to be in "Good Condition", the Bidder's Deposit will be returned.

D. In the event that the Bid Documents are returned and are not in "Good Condition", the Bidder understands that the Architect and Architect's Consultants will incur certain costs in replacement of missing items and to repair the Bid Documents to their original condition, in order to be issued as Construction Documents. The bidder agrees to pay the Design Team a service fee of $82.00 an hour (with a two-hour minimum of $164.00). The service fee will be deducted from the Bidder's deposit, and the remainder refunded to the Bidder.

E. Bidder understands and agrees the Bid Documents are instruments of Architect's and Architect's Consultants' **("Design Team")** professional service and are intended for one-time use by Bidder in the bidding of the Project. All information contained in the Bid Documents are and shall remain the property of the Design Team, who is deemed to be the author of the drawings and data, and the Design Team shall retain all common law, statutory law, and all other rights, including copyrights, with respect to Bidder.

F. The Bidder shall indemnify and hold harmless, the Design Team, its officers, directors, employees or subcontractors, to the fullest extent permitted by law, against all claims, liabilities, losses, damages, and costs, including but not limited to attorney's fees and defense costs arising out of or resulting from Bidder or any other person or entity that gains information from the Bid Documents or copies any part of the Bid Documents, or uses the Bid Documents or copies any part of the Bid Documents, for purposes other than the bidding of this project, and will be liable to the Design Team for fees equal to the fees paid by the client pursuant to developing the documents for this project.

DARDEN ARCHITECTS, INC.

Number of Sets Requested:_____

_____ _____

Print Name (Bidder) Title

_____ _____

Signature Date

3.3 BIDDER'S USAGE AGREEMENT FOR BID DOCUMENTS HARD COPY AND ELECTRONIC IMAGE FORMAT

Project Name: _____

DA Project No.: _____

I, _____, as duly authorized agent of _____ ("Bidder") as prospective bidder on the above named project ("Project") is requesting a copy of the project BID DOCUMENTS (bidding requirements, contract requirements, specifications, contract drawings, resource drawings if any, and addenda to date).

Bidder's Usage Agreement:

A. Bidder is being provided copies of Bid Documents for the Project, which consists of two parts. One part of the Bid Documents is in the Hard Copy Format ("HCF") and the other part is in the Electronic Image Format ("EIF") on CD-ROM. Bidder acknowledges that HCF Documents and the EIF Documents are being provided as the official record set of documents issued for bidding. It is the Bidder's responsibility to review and obtain all information from both the HCF and the EIF documents necessary for a complete and accurate bid. This request is subject to the following conditions, which the Bidder hereby agrees to abide by:

B. Bidder shall pay a non-refundable deposit for the Bid Documents in the amount of $_____. In the event the Bidder is not the successful bidder, the bidder agrees to permanently dispose of the HCF and EIF on the Project CD-ROM.

C. Bidder acknowledges that neither the EIF documents nor the CD-ROM will be updated by the Design Team. The CD-ROM contains the original documents and will not be updated regardless of when Bidder obtains the CD-ROM. Any changes to the contract documents will be issued as a separate document.

D. Bidder is further warned that while the EIF information appears to be extremely accurate, this apparent accuracy is an artifact of the techniques used to generate it and is no way intended to imply actual accuracy. The Bidder acknowledges and takes full responsibility for the accuracy, correctness of measurements, areas, inventories derived, conclusions drawn, and information extracted from the EIF documents.

E. Bidder understands and agrees the HCF and EIF documents are instruments of Architect's and Architect's Consultants' **("Design Team")** professional service and are intended for one-time use by Bidder in the bidding of the Project. All HCF and EIF documents are and shall remain the property of the Design Team, who is deemed to be the author of the drawings and data, and the Design Team shall retain all common law, statutory law, and all other rights, including copyrights, with respect to Bidder.

F. The Bidder shall indemnify and hold harmless, the Design Team, its officers, directors, employees or subcontractors, to the fullest extent permitted by law, against all claims, liabilities, losses, damages, and costs, including but not limited to attorney's fees and defense costs arising out of or resulting from Bidder or any other person or entity that gains information from the Bid Documents or copies any part of the Bid Documents, or uses the Bid Documents or copies any part of the Bid Documents, for purposes other than the bidding of this project, and will be liable to the Design Team for fees equal to the fees paid by the client pursuant to developing the documents for this project.

DARDEN ARCHITECTS, INC.

Description of the HCF Documents and the EIF Documents on CD-ROM, provided:

_____

_____

_____

_____	_____
Print Name (Bidder)	Title
_____	_____
Signature	Date

3.4 BIDDER'S USAGE AGREEMENT FOR PARTIAL BID DOCUMENTS

Project Name: _____

DA Project No.: _____

I, _____, as duly authorized agent of _____ ("Bidder") as prospective bidder on the above named project ("Project"). The Bidder acknowledge having received at least one (1) complete set of the Bid Documents for the subject project and all Addenda issued to date in either Hard Copy Format ("HCF") and/or an Electronic Image Format ("EIF").

Bidder's Usage Agreement:

A. The Bidder is requesting partial copies of the Bid Documents ("Partial Documents") in the format originally issued and that was prepared by the Architect and/or Architect's Consultants ("Design Team") on the subject Project, so that the information therein may be utilized in the Bidder's work on the same project. The Partial Documents are strictly intended for the Bidder's convenience and are not recognized as part of the official record set of Bid Documents issued for bidding. This request is subject to the following conditions, which the Bidder hereby agrees to abide by:

B. The Bidder shall pay for all costs in reproducing the requested Partial Documents directly to the Printers. In the event that the Bidder is not the successful bidder, the Bidder agrees to permanently dispose of the Partial Documents.

C. The Bidder recognizes that the value of the Partial Documents far exceeds the cost of printing. The Bidder further agrees that the Bidder will make no other copies of the Partial Documents. Any copying, and/or reuse of the Partial Documents without written authorization of Darden Architects, Inc. is prohibited.

D. The Bidder understands that the accuracy of the information is an artifact of the techniques used to generate it and is in no way intended to imply actual accuracy. The Bidder agrees that by using these Partial Documents, the Bidder is in no way relieved of the responsibility to review and obtain all information from the complete set of the Bid Documents necessary for a complete and accurate bid.

E. The Bidder understands and agrees to that any documents provided are instruments of the professional service by the Design Team and are intended for one-time use solely in the bidding of this Project. They shall remain the property of the Architect or the Architect's Consultants, who is deemed to be the author of the documents and who shall retain all common law, statutory law, and all other rights, including copyrights, with respect to the Bidder.

F. The Bidder shall indemnify and hold harmless, the Design Team, its officers, directors, employees or subcontractors, to the fullest extent permitted by law, against all claims, liabilities, losses, damages, and costs, including but not limited to attorney's fees and defense costs arising out of or resulting from Bidder or any other person or entity that gains information from the Partial Documents or copies the Partial Documents, or uses the Partial Documents or copies the Partial Documents, for purposes other than the bidding of this project, and will be liable to Design Team for fees equal to the fees paid by the client pursuant to developing the documents for this project.

G. In the event that the Bidder is a successful bidder, the Bidder agrees that all Bid Documents issued to the Bidder, and Partial Documents obtained by the Bidder, along with any other documents utilized by the Bidder in preparing the bid, will be included in the Escrow Bid Documents when required by the General Conditions. Any and all documents prepared and issued by the Design Team, which are included as part of the Escrow Bid Documents, will be returned to Darden Architects, Inc. at the close of escrow.

DARDEN ARCHITECTS, INC.

Description of the requested documents:

_____
_____
_____
_____
_____
_____

_____	_____
Print Name, (Bidder)	Title
_____	_____
Signature	Dated

END OF SECTION

Revised: 7/25/2019

Bid No. 22-01

Addams Elementary School Building Additions and Modernization

FRESNO UNIFIED SCHOOL DISTRICT
PURCHASING SERVICES
4498 N. BRAWLEY
FRESNO, CALIFORNIA 93722
559-457-3588

FRESNO UNIFIED SCHOOL DISTRICT
SECTION 00 01 10
TABLE OF CONTENTS

END OF SECTION

FRESNO UNIFIED SCHOOL DISTRICT
NOTICE TO BIDDERS

NOTICE INVITING BIDS PURSUANT TO PUBLIC CONTRACT CODE 22000, ET SEQ.
(THE UNIFORM PUBLIC CONSTRUCTION COST ACCOUNTING ACT)

Notice is hereby given that the Fresno Unified School District ("DISTRICT") will receive sealed bids for **Bid No. 22-01, Addams Elementary School Building Additions and Modernization,** the construction of a new 5 classroom Early Learning Building, Administration Building and 7 new portable classrooms, and infrastructure for 6 temporary portable classrooms. The project also includes site utilities, new paving, concrete, play structures, irrigation and landscaping.

DISTRICT hereby notifies all bidders that they will affirmatively ensure that in any Contract entered into pursuant to this advertisement, disabled veteran business enterprises (DVBE) will be afforded full opportunity to submit proposals in response to this invitation and will not be discriminated against on the grounds of race, color, creed, sex or national origin in consideration for award. The DVBE goal for the project is as follows: three percent (3%) of the dollar amount of the Contract.

Notice is hereby given pursuant to the provisions of Section 1770 et seq of the California Labor Code, each worker of the contractor and any of its subcontractors engaged in work on the Project shall be paid not less than the prevailing wage rate. The project is subject to compliance monitoring and enforcement by the Department of Industrial Relations (DIR).

Pursuant to Labor Code Section 1725.5, the DIR established a Contractor Registration Program, in which no contractor or subcontractor shall bid on, be listed in a bid, or engage in the performance of any public work contract without being registered.

Prime Contractor must have a valid **Class "B" Contractor's License**.

This Project subject to Storm Water Prevention Pollution Plan requirements performed by Contractor.

A MANDATORY pre-bid conference has been scheduled at **9:00 AM, June 8, 2021** in front of the **Administration Office at Addams Elementary School, 2117 W. McKinley Ave., Fresno, CA 93728.** Contractors bidding as a Prime Contractor for the project must attend in order for their bid to be "responsive". Immediately following the pre-bid conference will be a mandatory job-walk of the site.

This Project is subject to prequalification, pursuant to Public Contract Code 20111.6. Contractors submitting bids to perform as both **Prime Contractor/General Contractor or Electrical, Mechanical, and Plumbing Subcontractor** must be prequalified prior to bidding on the project. Prime Contractors must list prequalified mechanical, electrical and plumbing subcontractors or in order for their bid to be "responsive". Electrical, Mechanical, and Plumbing subcontractors are contractors holding either: C-4, C-7, C-10, C-16, C-20, C-34, C-36, C-38, C-42, C-43, and C-46 contractor's license. Prequalified Prime Contractor may self-perform electrical, plumbing, mechanical work if prequalified under applicable licenses. Applications may be obtained from DISTRICT Purchasing Web Site: https://purchasing.fresnounified.org/prequalification-for-public-works or at DISTRICT Purchasing Department. Questionnaire and Financial Statement shall be submitted directly to DISTRICT Purchasing Department no later than **2:00 P.M., June 15, 2021.** Prequalification status is valid for one (1) calendar year for any subsequent projects requiring prequalification.

Sealed Bids and the DVBE Declaration must be received prior to **2:01 PM, June 29, 2021** through the district's online bidding portal Procureware or the DISTRICT Purchasing Department, 4498 N. Brawley, Fresno CA 93722 after which time the bids will be opened and read aloud.

Bids shall be accompanied by a certified check, cashier's check, or a bidder's bond in an amount not less than ten percent (10%) of total bids made payable to Fresno Unified.

The substitution of appropriate securities in lieu of retention amounts from progress payments in accordance with Public Contract Code Section 22300 is permitted.

The Bid documents are on file at Fresno and Tulare Builders Exchanges; and Fresno Reprographics.

Pursuant to Public Contract Code 3400(c)(2), Fresno Unified School District finds that it is in the best interest of the DISTRICT to standardize the products, equipment, and materials listed in Exhibit A-1 and Exhibit A-2 in order to match other products/equipment in use on a particular work of improvement either completed or in the course of completion. Where a specific brand, trade name, material, or product identified in the bid documents is also listed in Exhibit A-1 or Exhibit A-2, it shall be deemed to be followed by the words "No Substitutions," and CONTRACTOR shall not make or request substitutions regarding any such product, equipment or material. Exhibit A-1 and Exhibit A-2 may be obtained from DISTRICT Purchasing Department web page under public works CUPCCAA menu: https://purchasing.fresnounified.org/cupccaa.

Copies of the bid documents may be obtained from Darden Architects, 6790 N. West Ave., Fresno, CA 93711. Refer any questions to Andrew Corral, Telephone: 559-448-8051. A refundable deposit of **$250.00** made payable to Fresno Unified is required for each set of drawings and specifications.

Published: June 2, 2021

INFORMATION TO BIDDERS

General. This instruction to bidders is in addition to any instructions, conditions, terms and/or requirements stated elsewhere in the Contract Documents. It is imperative that you review all of the Bid/Contract documents in order to be fully apprised of all the terms, conditions and other requirements comprising the contract.

Report Fraud, Waste or Abuse. Call the Anti-Fraud Hotline, (559) 325-3200, or by completing the fraud, waste or abuse reporting form online at: http://www.ppcpas.com/fresno-unified-fraud-alert The anti-fraud waste or abuse reporting hotline is available to report alleged fraud in the DISTRICT. The responsibility for monitoring the hotline rests with the internal auditor for Fresno Unified School District, Price, Page & Company. A report may be made anonymously.

Anti-discrimination. Fresno Unified School District prohibits discrimination, harassment, intimidation, and bullying based on actual or perceived race, color, ethnicity, national origin, immigration status, ancestry, age, creed, religion, political affiliation, gender, gender identity, gender expression, genetic information, mental or physical disability, sex, sexual orientation, marital status, pregnancy or parental status, medical information, military veteran status, or association with a person or a group with one or more of these actual or perceived characteristics or any other basis protected by law or regulation, in its educational program(s) or employment. If you believe you, or your student, have been subjected to discrimination, harassment, intimidation, or bullying you should contact your school site principal and/or the District's Chief Compliance and Title IX Officer Paul Idsvoog, by phone at 559-457-3730, by email at Paul.Idsvoog@fresnounified.org, or in person at 2309 Tulare Street Fresno, CA 93721.

Securing Contract Documents.

Refer any questions to:

Darden Architects
6790 N. West Ave., Fresno, CA 93711
Attn: Andrew Corral
Telephone: 559-448-8051

Deposit. A refundable deposit of **$250** made payable to the Fresno Unified School District, is required for each set of drawings and specifications obtained. This deposit is a guarantee that the drawings and specifications will be returned in good condition. The deposit will be refunded to each bidder who returns the plans, specifications and other documents in good condition within ten (10) days of Bid award.

Bid Proposals. To receive consideration, bid proposals shall be made in accordance with the following instructions.

1.**Contact with District Personnel during Bid Process**. From the time the bid packets are released until an award recommendation or rejection of all bids is made, no direct contact shall be made with DISTRICT personnel except Purchasing Division without the Buyer's specific authorization. All requests for information shall be referred to the DISTRICT's ARCHITECT/ENGINEER or BUYER as identified on the Notice to Bidders. Interpretations, clarifications, changes, or deletions verbally expressed by DISTRICT's staff other than ARCHITECT/ENGINEER or BUYER are not binding and shall not be used in determining BIDDER'S response to invitation to bid.

2.**Architect/Engineers' Estimates.** Any Architect/Engineers' estimate(s) provided by the DISTRICT or its Representatives is intended only to aid with prequalification and bid bond requirements. Any amount provided is an

estimated range and may not reflect recent scope changes, addenda, and/or alternate bid items; nor does it reflect an approved or not approved budget for this project. The Architect/Engineers' estimate for this project is around $8,000,000.

3.**Bid Limit Thresholds.** On January 8, 2014, DISTRICT elected to become subject to the California Uniform Public Construction Cost Account Act (CUPCCAA) which provides for alternative bidding thresholds and procedures pursuant to public contract codes 22000 through 22045 when an agency performs construction work by contract. Public projects of $200,000 or less may be let to contract by the informal procedures set forth in the Act PCC22032(b); and Public project of more than $200,000 shall be let to contract by formal bidding procedures set forth in the Act PCC22032(c).

Informally Bid Projects: If all bids received under the informal bid process are in excess of $200,000, the governing board may by adoption of a resolution by a four-fifths vote award the contract at $212,500 or less to the lowest responsible bidders as set forth in the Act PCC22034(d). Fresno Unified may also choose to reject all bids and rebid; whichever is in the best interest of the DISTRICT as determined solely by the DISTRICT.

4.**Mandatory Pre-Bid Conference/Job-Walk.** A Mandatory Pre-bid conference is only applicable to this bid if the "Notice to Bidders" section identifies the pre-bid as mandatory. MANDATORY pre-bid conferences must be attended by Prime Contractors to be eligible to bid the project. A Sign-In Sheet will be circulated at the pre-bid conference to verify attendance. The Sign-In Sheet will be posted on DISTRICT Purchasing Web Site and distributed by Addenda for mandatory pre-bid conferences. Failure to sign-in and attend will result in the rejection of prime contractor's bid as "non-responsive".

Immediately following a pre-bid conference will be a job-walk of the site(s) to provide an opportunity for bidders to view the project site and become familiar with existing conditions. Changes, clarifications, additions, and deletions discussed at the pre-bid conference and job-walk are only binding when incorporated by written addenda. **As part of pre-bid/job-walk CONTRACTOR shall be responsible for inspection and verification of all dimensions and measurements identified in drawings; submitted proposal shall be inclusive of actual measurements required to deliver a turn-key project.**

Interpretations, clarifications, changes, or deletions verbally expressed by DISTRICT's Staff or Representatives at pre-bid/job-walk are not binding and shall not be used in determining BIDDER'S response unless followed by written addenda.

The Pre-bid conference is scheduled at **9:00 AM, June 8, 2021** in front of the **Administration Office at Addams Elementary School, 2117 W. McKinley Ave., Fresno, CA 93728.**

5.**Prequalification Requirement.** Prequalification is only applicable if the "Notice to Bidders" section identifies this project as a prequalification bid. In accordance with Public Contract Code 20111.6, contractors submitting bids to perform as both **Prime Contractor and General Contractor (A or B license) or Electrical, Mechanical, and Plumbing Subcontractor** must be pre-qualified prior to bidding on the project. **Prime Contractors must list prequalified mechanical, electrical and plumbing subcontractors in their bid to be "responsive"; non-compliance will result in DISTRICT rejection of prime contractor's bid as "non-responsive".** For purposes of this prequalification, Electrical, Mechanical, and Plumbing subcontractors are contractors holding either: C-4, C-7, C-10, C-16, C-20, C-34, C-36, C-38, C-42, C-43, and C-46 California State Contractors license pursuant to Section 7058 of the Business and Professions Code. Prequalification Applications may be obtained from DISTRICT Purchasing Web Site: https://purchasing.fresnounified.org/prequalification-for-public-works or picked-up at DISTRICT Purchasing Department. Contractor Questionnaire and Financial Statement shall be submitted directly to DISTRICT Purchasing Department no later than **2:00 PM, June 15, 2021** for prequalification on the project**.** Prequalification status is valid for one (1) calendar year for any subsequent projects requiring prequalification.

Prime Contractor and Subcontractor for prequalification purpose are defined in accordance with PCC Section 4113: the word "subcontractor" shall mean a contractor, who contracts directly with the prime contractor. "Prime contractor" shall mean the contractor who contracts directly with the awarding authority.

Deadline for Receipt of Bid Proposals. Sealed Bids and the DVBE Declaration must be received prior to **2:01 PM, June 29, 2021** through the district's online bidding portal Procureware or the DISTRICT Purchasing Department, 4498 N. Brawley, Fresno CA 93722 after which time the bids will be opened and read aloud. Envelopes containing BIDS must be sealed, prominently marked with bid number, bid title, respective due date and time for each, name of bidder and submitted to the Purchasing Department of the DISTRICT, 4498 N. Brawley, Fresno, California 93722. BIDS received later than the designated time and date will not be accepted. Facsimile (FAX) copies of the bid will not be accepted.

6.**License**. Bidder may bid only on work of a kind for which it is properly licensed by the California Contractor's State License Board and Registered by the DIR. Joint venture bidders must possess a joint venture license. The bidder and all subcontractors must be properly licensed, as required by law, at the time of bid and all licenses must remain current for the duration of the Project. All bids shall state the contractor's license number and its expiration date. Failure to supply complete contractor's license information and appropriate signatures on the bid form may result in the bid being considered non-responsive. It is the bidder's responsibility to ensure that the DISTRICT can verify licensure before bid awards are made.

7.**License Required**. To perform the work required by this bid, PRIME CONTRACTOR must possess the following type of contractor's license: **Class "B"** California State Contractors license.

8.**Preparation of Bid Form**. The DISTRICT invites bid submittals through our online bidding portal Procureware or on the enclosed form to be submitted at the time and place stated in the Notice to Bidders calling for bids. All blanks in the bid form must be appropriately filled in, and all prices must be stated in both words and figures. All bids must be submitted through Procureware or in sealed envelopes bearing, on the outside, the name and address of the bidder and the name of the project for which the bid is submitted. It is the sole responsibility of the bidder to ensure that the bid is received at the proper place and time. Any bid received after the scheduled closing time for receipt of bids will be returned to the bidder unopened. The completed form should be without interlineations, alterations, or erasures.

9.**Bid Security**. Each bid shall be accompanied by a certified or cashier's check payable to the DISTRICT, or a satisfactory bid bond in favor of the DISTRICT executed by the bidder, as principal, and an admitted surety insurer in an amount not less than Ten Percent (10%) of the maximum amount of the bid to cover all sections bidder is bidding made payable to Fresno Unified School District. The original bid security shall be included in the bidder's 1st submitted bid section to cover all sections intended to bid. Bidder may enclose a copy of the security in each subsequent bid section submitted for bid. Personal sureties and unregistered surety companies are unacceptable. The check or bid bond shall be given as a guarantee that the bidder will execute the contract, if it is awarded to him, in conformity with the Contract Documents, and shall provide the surety bond(s) and other required contract documents, as specified, within ten (10) calendar days after notification of award of the Contract to the bidder. The security shall be forfeited to the DISTRICT should the bidder to whom the Contract is awarded fail to execute the Agreement and provide the bonds and other documents within ten (10) calendar days of award.

10.**Execution of Forms**. Each bid must give the full business address of the bidder and be signed by him with his usual signature. Bids by partnerships must furnish the full name of all partners and must be signed in the partnership name by one of the members of the partnership, or by an authorized representative, followed by the signature and designation of the person signing. Bids by corporations must be signed with the legal name of the corporation followed by the name of the

state of the incorporation and by the signature and designation of the president, secretary, or other person authorized to bind it in the matter. The name of each person signing shall also be typed or printed below the signature. When requested by the DISTRICT, satisfactory evidence of the authority of the officer signing on behalf of the corporation shall be furnished.

11.**Bid Proposal Negotiations**. A bid response to any specific item of this bid with terms such as "negotiable", "will negotiate" or similar counter proposal will result in the bid being rejected as non-responsive.

12.**Pricing**. If required, unit prices on all classes of work, as specified or required, shall be submitted. Additions to or deductions from the contract sum shall be based on these unit prices. Unit pricing on additions and deductions will remain firm throughout the contract term.

13.**Taxes**. Taxes shall be included in the amount bid. Federal excise taxes are generally not applicable to school districts.

14.**Bid Exceptions**. All exceptions which are taken in response to this bid must be stated clearly. The taking of bid exceptions or providing false, incomplete or unresponsive statements may result in the disqualification of the bid. Allowance of exceptions will be determined by the governing board, whose decisions shall be final. Any bid exceptions or additional conditions requested after bid closure, which are not detailed within the bid response, may result in disqualification of the bid. No oral or telephonic modification of any bid submitted will be considered.

15.**Withdrawal of Bids**. Bids may be withdrawn by the bidder prior to the time fixed for the opening of bids. A successful bidder may not be relieved of his bid unless by consent of the governing board of DISTRICT and in conformity with the provisions of Public Contract Code Sections 5100-5107, or other applicable law

16.**Opening of Bids**. Opening of bids shall be as soon after the hour set as practicable; opening to be as set forth in the Notice to Bidders. Any and all bidders will be permitted to attend. All bids submitted shall be considered binding contractual offers to perform the work in accordance with the Contract Documents for **90** calendar days from the date of the bid opening.

17.**Examination of Site and Contract Documents**. Each bidder shall visit the site of the proposed work and fully acquaint himself with the conditions relating to the construction and labor so that he may fully understand the facilities, difficulties, and restrictions attending the execution of the work under the Contract. Bidders shall thoroughly examine and be familiar with the drawings and specifications. The failure or omission of any bidder to receive and/or examine any Contract Document, form, instrument, addendum, or other document, or to visit the site and acquaint himself with the conditions attendant thereto shall not relieve any bidder from any duties and/or obligations with respect to his bid or to the Contract. The submission of a bid shall be incontrovertible evidence that the bidder has complied with this section.

18.**Modifications**. Changes in or additions to any bid document, recapitulations of the work bid upon, alternative proposals, or any other modification of the bid form which is not specifically called for in the Contract Documents may result in the DISTRICT'S rejection of the bid as not being responsive to the invitation to bid. No oral, telephonic, or telegraphic modification of any bid submitted will be considered.

19.**Agreements and Bonds**. The Agreement form which the successful bidder, as CONTRACTOR, will be required to execute, and the form of the payment and performance bonds which he will be required to furnish prior to execution of the Agreement, are included in the Contract Documents and said bonds shall each be in the amount of One Hundred Percent (100%) of the amount of the Contract.

The performance and payment bonds shall be issued by an admitted surety insurer as defined by and in conformity with California law. Furthermore, at the time required for submission of the foregoing bonds, each bond should have attached to it the following documentation:

a. A certified copy of the power of attorney of the person who executed the bond;
b. A certified copy of the certificate of authority of the surety;
c. A certificate of the county clerk stating that the surety's certificate of authority is still in force; and
d. Copies of the surety's most recent annual and quarterly statements filed with the California Insurance Commissioner.

20.**Interpretation of Plans and Documents**. If any bidder is in doubt as to the true meaning of any part of the Contract Documents, or finds discrepancies in, or omissions from the drawings and specifications, a written request for an interpretation or correction thereof may be submitted to the DISTRICT. The bidder submitting the written request shall be responsible for its prompt delivery. Any interpretation or correction of the Contract Documents will be made only by addendum duly issued by the DISTRICT, and a copy of such addendum will be hand delivered or mailed or faxed to each bidder known to have received a set of the Contract Documents. No person is authorized to make any oral interpretation of any provision in the Contract Documents, nor shall any oral interpretation be binding on the DISTRICT. If discrepancies on drawings, or in the plans or specifications, or conflicts between drawings, plans, specifications, terms or conditions exist, the interpretation of the DISTRICT shall prevail. Bidder shall become familiar with the plans, specifications and drawings.

Submittal of a bid without clarifications shall be incontrovertible evidence that the bidder has determined that the plans, specifications and drawings are sufficient for bidding and completing the Project; that bidder is capable of reading, following and completing the Project in accordance with the plans, specifications and drawings; and that the plans, specifications and drawings fall within an acceptable standard for plans, specifications and drawings; and that bidder agrees that the Project can and will be completed according to the DISTRICT's time lines and according to the progress schedule to be submitted by the successful bidder incorporating the DISTRICT's time lines for completion of the Project.

21.**Order of Precedence**. Contractor acknowledges that the bid documents are the combined efforts of multiple parties and in the event of inconsistency between the provisions, the order of precedence shall be: (1) DISTRICT's Special Conditions (if any); (2) DISTRICT's General Conditions and General Requirements; (3) DISTRICT's specifications; (4) DISTRICT's drawings. Without limiting Contractor's obligation to identify conflicts for resolution by the ARCHITECT, it is intended that the more stringent, higher quality, more costly or expensive interpretation and greater quantity of Work shall apply. Drawings and specifications are intended to be fully cooperative and to agree.

22.**Addenda or Bulletins**. Any addenda or bulletins issued during the time of bidding, upon approval of ARCHITECT/ENGINEER and/or Division of the State Architect, for part of the drawings and specifications loaned to the bidder for the preparation of his proposal, shall be covered in the proposal and shall be made a part of the Contract.

23.**Award of Contract(s)/Rejection of Bids**. Upon notice of award, the successful bidder shall post all required bonds and submit proper evidence of insurance coverage as called for by the Contract Documents. If this is not accomplished within ten (10) calendar days, the DISTRICT reserves the right to retain/cash CONTRACTOR'S bid security to cover any and all expenses, costs and damages, and award the bid to the next lowest bidder or otherwise proceed as allowed by law. Rejection of any or all proposals, to contract work with whomever and in whatever manner, to abandon the work entirely, or to waive any informality/irregularity in the bids received or the bidding process is reserved as the right of the DISTRICT.

24.**Bid Protest Procedure.** This DISTRICT review procedure must be followed by any bidder who believes that a bid award recommendation is not consistent with DISTRICT regulations, the bid specifications, or in compliance with law:

a. Protest on a bid must be filed in writing with the Executive Director of Purchasing within two working days after receipt of the bid summary and its recommendations are sent to the bidders. Failure to file a timely bid protest shall constitute a bidder's waiver of the right to have the bid award reviewed.
b. The Executive Director of Purchasing will convene a meeting with the review requestor to attempt to resolve the problem.
c. In the event the protest is not resolved, the protest will be referred to the Superintendent or his designee, normally the Chief Financial Officer.
d. Should the protest not be resolved at this level, it shall be referred to the Board along with all documentation regarding the protest and the responses at each level.
e. The Board will not act upon a protest until each of the proceeding steps has been exhausted.

25. **Definitions**.

a. Responsible Bidder – A bidder who has demonstrated the attribute of trustworthiness, as well as quality, fitness, capacity, and experience to satisfactorily perform a public works contract.

b. Responsive Bid – A bid which meets all of the requirements and specifications provided in the applicable Contract Documents.

26. **Evidence of Responsibility**. Upon the request of the DISTRICT, a bidder whose bid is under consideration for the award of the Contract shall submit promptly to the DISTRICT satisfactory evidence showing the bidder's financial resources, construction experience and organization.

27. **Listing Subcontractors**. Each bidder shall submit a list of the proposed subcontractors on the project as required by the Subletting and Subcontracting Fair Practice Act (Public Contract Code Sections 4100 et seq.). Forms for this purpose are furnished with the Contract Documents.

28. **Alternates**. Pursuant to the provisions of Public Contract Code Section 20103.8, the DISTRICT may require that a bid include prices for items that may be added to, or deducted from, the scope of work of the Contract for which the bid is submitted. In accordance with Assembly Bill 2182 and Public Contract Code 10126 (c) (2) the contract may be awarded at the election of the governing board to the lowest cost, responsible bidder. This section does not preclude the DISTRICT from adding to or deducting from the Contract any of the additive or deductive items after the lowest responsible bidder has been determined.

The Method for determining the lowest bid will be **combined total of Base Bid plus Add Alternate 1A**.

29. **Execution of Contract**. The Contract shall be awarded to the lowest responsible bidder submitting a responsive bid and shall be executed by the successful bidder within ten (10) calendar days after the date so notified by the DISTRICT. The award, if made, will be made within ninety (90) days after the opening of the bids. If the bidder(s) to whom an award is made, fails or refuses to execute the Contract and provide the required bonds and other documents within ten (10) calendar days from the date of receiving notification that the Contract has been awarded to the bidder, the DISTRICT may declare the bidder's bid deposit or bond forfeited and may award the work to the next lowest responsible bidder, reject all bids and call for new bids, or abandon the work entirely.

30. **Bidders Interested in More than One Bid**. No person, firm, or corporation shall be allowed to make, file, or be interested in more than one bid for the same work/Project unless alternate bids are specifically called for by the DISTRICT.

A person, firm, or corporation that has submitted a sub-proposal to a bidder, or quoted prices for materials to a bidder, is not disqualified for that reason from submitting a sub-proposal or quoting prices to other bidders or making a prime bid.

31. **Instruction for Insurance**.

A.CONTRACTOR, at CONTRACTOR'S expense, shall obtain and maintain insurance at all times during the prosecution of the Contract, in companies and through agencies approved by the DISTRICT and with limits not less than those stated hereinafter.

B.Acceptance of the Certificates of Insurance shall not relieve or decrease the liability of the CONTRACTOR.

C.Certificates of Insurance shall be originally signed by an authorized representative and shall be submitted in duplicate and shall contain transcripts from the policies authenticated by the proper office of the insurer evidencing, in particular, those insured, the extent of the insurance, the location of and the operation to which the insurance applies and thirty (30) days' NOTICE OF CANCELLATION of the policy. Policy shall read "SHOULD ANY OF THE ABOVE DESCRIBED POLICIES BE CANCELLED BEFORE THE EXPIRATION DATE THEREOF, THE ISSUING COMPANY WILL MAIL 30 DAYS WRITTEN NOTICE TO THE CERTIFICATE HOLDER NAMED".

D.All of CONTRACTOR'S **insurance policies shall name the Fresno Unified School District, and the Architect/Engineer, and its officers, employees, agents, and governing board members as additional insured**. Certificates of Insurance *must have attached Additional Insured Endorsement* (Insurance Services Officer form CG2010). Such policy(ies) of insurance shall be endorsed so that the CONTRACTOR'S insurance shall be primary and no contribution shall be required of the DISTRICT.

E. Insurance coverages shall not be less than the following:

1) Workers' Compensation in accordance with the provisions of Section 3700 of the Labor Code. CONTRACTOR shall sign and file with DISTRICT the following certificate prior to performing the work under this contract: "I am aware of the provisions of Section 3700 of the Labor Code which require every employer to be insured against liability for Workers' Compensation or to undertake self-insurance in accordance with the provisions of that Code, and I will comply with those provisions before commencing the performance of the work of this contract." The form for this certificate is included as a part of the Contract Documents.

2) Comprehensive General Liability coverage must be written on an occurrence, as opposed to claims made basis, with policy limits of no less than **$2,000,000 CSL** (combined single limit), **BI** (bodily injury) and **PD** (property damage) and include coverage for the following:
   1. Premises – operations
   2. Contractual liability
   3. Products
   4. Completed operations
   5. Broad form PD and including X, C and U coverage, if applicable to the work

3) Comprehensive Auto Liability insurance with limits of not less than **$1,000,000 CSL, BI** and **PD**

4) Builder's Risk Insurance. Prior to commencement of work, CONTRACTOR shall submit certificates evidencing that it has obtained, for the period of the Contract, Builder's Risk Completed Value insurance coverage upon the entire project which is the subject of this Contract, including work completed or in progress.

32.**Prevailing Law**. In the event of any conflict or ambiguity between these instructions and state or federal law or regulations, the latter shall prevail. Additionally, all equipment to be supplied or services to be performed shall conform to all applicable requirements of local, state and federal law.

33.**General Prevailing Rates of Wages and Apprenticeship Training Requirements**. Notice is hereby given pursuant to the provisions of sections 1770 et seq of the California Labor Code, the Director of the Department of Industrial Relations has determined the general prevailing rates of per diem wages in the locality in which this work is to be performed for each craft or type of workman or mechanic needed to execute the contract which will be awarded to the successful bidder, and the prevailing rates are as set forth in the web address www.dir.ca.gov/DIRdatabases.html and are incorporated herein by reference.

34.**Contractor Registration Program (SB 854).** Pursuant to Labor Code Section 1725.5, the Department of Industrial Relations (DIR) established a public works contractor registration program for prevailing wage compliance monitoring and enforcement on all public works projects. The cost to register for the program is currently $300 and is non-refundable. This is a DIR fee paid to the State by the Contractor; the DISTRICT will not register a contractor, nor collect funds. Pursuant to Labor Code Section 1725.5; Starting March 1st, 2015 no contractor or subcontractor may be listed in a bid proposal unless registered with the DIR. Starting April 1st, 2015 no contractor or subcontractor may be awarded a contract, nor employed on a Public Work project unless registered with the DIR. The project is subject to compliance monitoring and enforcement by the DIR and will require prime contractors and subcontractors to upload ALL payroll records on the DIR website: http://www.dir.ca.gov/Public-Works/PublicWorks.html.

35.**Drawings and Specifications**. The successful bidder shall be exempt from the foregoing requirements and its deposit returned. All drawings, specifications and other documents used or prepared during the Project shall be the exclusive property of DISTRICT, Section 00 72 00.02 of the "General Requirements" section notwithstanding.

36.**Substitution of Materials**. Substitution of materials shall be in accordance with Section 01 25 13. 01, of the "General Requirements" section.

37.**Payments**. Payments to the CONTRACTOR on account of the Contract shall be made in accordance with terms of the Contract.

38.**Performance Retention Agreement**. In accordance with Public Contract Code Section 22300, CONTRACTOR shall be permitted to substitute securities for any monies withheld by the DISTRICT to insure performance under the contract with a financial institution satisfactory to the DISTRICT. No escrow retention agreement shall be accepted unless it complies with all requirements of Public Contract Code Section 22300. A sample agreement is included herein as "Escrow Agreement".

39.**Governing Law and Venue**. In the event of litigation, the bid documents, specifications, Contract Documents and all matters related to the bid, Contract and performance of the Contract shall be governed by and construed only in accordance with the laws of the State of California. Venue shall only be with the appropriate state or federal court located in Fresno County, California.

40.**Early Termination**. Notwithstanding any provision herein to the contrary, if for any fiscal year of this Contract the governing body of the DISTRICT fails to appropriate or allocate funds for future periodic payments under the Contract after exercising reasonable efforts to do so, DISTRICT will not be obligated to pay the balance remaining unpaid beyond the fiscal period for which funds have been appropriated or allocated and either party hereto may terminate the agreement upon thirty (30) days written notice. Upon such notice, the DISTRICT shall be released of its obligations to make all further installment payments to the CONTRACTOR.

41.**Liquidated Damages**. In accordance with Government Code Section 53069.85, for each calendar day completion is delayed beyond the time specified in the Notice to Proceed, Contractor agrees to forfeit and pay to DISTRICT the Sum of **One Thousand Five Hundred dollars ($1,500) for each calendar day**.

All liquidated damages shall be deducted from any payments due to or to become due to CONTRACTOR. Notwithstanding any provisions of the Contract Documents to the contrary, liquidated damages shall be imposed until final completion of the entire project in conformity with all the terms, conditions, and requirements of the Contract Documents.

42.**Time of Completion**. The time allowed for completion for the project shall be **730** Calendar days from Notice to Proceed date. All work to be done concurrently and subject to all phasing and milestone dates. CONTRACTOR shall not commence Work on the Project site before the effective date of the accepted insurance and bonds. The anticipated start date for this project is August 23, 2021.

In accordance with General Conditions Section 00 73 16 (F), CONTRACTOR shall not commence Work on the Project site before the effective date of the insurance and bonds. The Notice to proceed and duration will not be altered for issuance of insurance and bonds.

43.**Forms Required to be Submitted with Bid**. Notwithstanding any provisions to the contrary, all proposals shall include the following completed documents/forms. Failure to submit the documents/forms may render the bid non-responsive.

FORMS:

- Bid Bond
- Bid Proposal Form
- Noncollusion Declaration
- Designation of Subcontractors (final due within 24hrs. of bid opening)
- Workers' Compensation Certification
- Student Safety Declaration Form (fingerprinting)
- Iran Contracting Act Certification (over $1 million)
- DVBE Declaration
- Good Faith Effort Worksheets (due within 24hrs of bid opening)
- No Prohibited Interest/Conflicts of Interest Declaration

44.**Asbestos and/or Hazardous Substance**. In accordance with the California Health and Safety Code, Section 25914.2, in the event a contractor encounters, on the site, a substance or material he or she reasonably believes to be asbestos or a hazardous substance they shall immediately cease work on the area affected and report the condition to the owner, the owner's representative or the ARCHITECT/ENGINER in writing. Work will not resume in the area affected until approved by the owner or owner's representative.

45.**Noncollusion Declaration**. In accordance with Public Contract Code Section 7106, each bidder shall be required to complete the Noncollusion Declaration form which is included in and part of the bid documents.

46.**Reject Any or All Proposals**. The DISTRICT reserves the right to accept or reject any or all proposals or bids or any combination thereof, including but not limited to accepting or rejecting particular sections of a bid alone or in combination with any others. The DISTRICT also reserves the right to waive any minor irregularities or informalities in the bids received or in the bidding process.

47. **Prohibited Interests/Conflict of Interest**. BIDDER is responsible for understanding and ensuring adherence to California Government Code section 1090 et seq., with respect to the Project. Pursuant to Government Code section 1090, no DISTRICT officers or employees shall be financially interested in any contract made by them in their official capacity, or by any body or board of which they are members. Nor shall DISTRICT officers or employees be purchasers at any sale or vendors at any purchase made by them in their official capacity. No official or employee of DISTRICT who is authorized in such capacity and on behalf of DISTRICT to negotiate, make, accept, or approve, or to take part in negotiating, making, accepting or approving, any architectural, engineering, inspection, construction or material supply contract or any subcontract in connection with construction of the Project, shall become, directly or indirectly, financially interested in the Project or in any part thereof.

An officer shall not be deemed to be interested in a contract entered into by the Board if the officer has only a "remote interest" in the contract (as "remote interest" is defined in Government Code section 1091(b)) and if the fact of that interest is disclosed to the Board and noted in its official records, and thereafter the Board authorizes, approves, or ratifies the contract in good faith by a vote of its membership sufficient for the purpose without counting the officer's vote with the remote interest per Government Code 1091.

By way of non-exclusive example relating to whether a financial interest is a "remote interest" or not:

1) If the date upon which BIDDER first started doing business with a DISTRICT Officer/Board Member (i.e., the date BIDDER first received goods or services supplied by the Board Member) was at least 5 years prior to Board Member's election or appointment, then the Board Member has a remote interest and BIDDER is not prohibited from submitting a bid on this Project.

2) If the date upon which BIDDER first started doing business with the Officer/Board Member (i.e., the date CONTRACTOR first received goods or services supplied by a Board Member) is less than five years before Board Member's election or appointment, then the Board Member has a prohibited conflict of interest and BIDDER cannot bid on this project.

3) The provision of a bid/quote to BIDDER over 5 years prior to Board Member's election or appointment, without the goods or services included in the bid actually being furnished to BIDDER, i.e., an unaccepted bid/quote, does not qualify to cause a financial interest to be a "remote interest" as that term is defined in California Government Code section 1091(b)(8).

In accordance with Government Code section 1092, every contract made in violation of any of the provisions of Section 1090 may be avoided at the instance of any party except the Officer (Board Member) interested therein. No such contract may be avoided because of the interest of an Officer (Board Member) therein unless such contract is made in the official capacity of such Officer, or by the Board. In the event any such contract is avoided due to a violation of California Government Code section 1090, BIDDER shall receive no compensation and shall repay DISTRICT any compensation received by BIDDER hereunder. BIDDER shall not aid, abet or knowingly participate in a violation of Government Code Section 1090, et seq.

00 25 13 PRE-BID MEETING & JOB WALK

Reserved

00 31 13. 13 PRELIMINARY PROJECT SCHEDULE

Reserved

00 31 13. 16 PRELIMINARY CONSTRUCTION SCHEDULE

Reserved

00 31 13. 23 PRELIMINARY PROJECT PHASES

Reserved

00 31 13. 33 PRELIMINARY PROJECT MILESTONES

Reserved

00 31 16 ARCHITECT/ENGINEER'S CONSTRUCTION ESTIMATE

Reserved

BID FORM

FRESNO UNIFIED SCHOOL DISTRICT

Bid No. 22-01

Pursuant to and in compliance with the contract documents, the undersigned bidder, having familiarized himself with the terms of the contact, the local conditions affecting the performance of the contract, the cost of the work at the place where the work is to be done and the drawings and specifications and other contract documents, proposes, and agrees to perform the contract within the time stipulated, including all of its component parts and everything required to be performed and to provide and furnish any and all of the labor, materials, tools, expendable equipment and all applicable taxes, utility and transportation services necessary to perform the contract and complete in a workmanlike manner all of the work required in connection with the work all in strict conformity with the drawings and specifications and other contract documents, including all addenda for the sum(s) indicated herein below.

Scope of work: ADDAMS ELEMENTARY SCHOOL BUILDING ADDITIONS AND MODERNIZATION

1. Base Bid: Addams ES Building Additions and Modernization $_____
(Numerical Amount)

1A. Add Alternate: Modernization of West Staff Parking Lot $_____
(Numerical Amount)

Note: ALL ENTRIES SHALL BE LEGIBLE AND SHALL BE TYPEWRITTEN OR PRINTED.

The receipt of the following addenda to the specifications is acknowledged:

Addendum No. _____ Date _____ Addendum No. _____ Date _____

Addendum No. _____ Date _____ Addendum No. _____ Date _____

Contractor: _____

If the bidding contractor is a corporation, state the capacity/title of the corporate officer signing and affix the corporate seal; if a partnership all partners should sign under the partnership name on a separate page attached to and made part of the bid. Unsigned bids will not be accepted.

The undersigned declares under penalty of perjury under the laws of the State of California that the representations made in this bid are true and correct.

Signature/Title	Area Code / Telephone Number
Type or Print Name	Area Code / Fax Number
Name of Company as Licensed	E-Mail Address
Address	Contractor License No. / Class / Expiration Date
City State Zip Code	Registration No.

Corporate Seal

Bid Bond #_____

BID BOND

(TO BE EXECUTED AND SUBMITTED WITH BID)

KNOW ALL MEN BY THESE PRESENT, that we, the undersigned _____ as Principal, and _____ as Surety, are hereby held and firmly bound unto the Fresno Unified School District, hereinafter called the "District" in the sum of Dollars equal to **ten percent of the total bid (10%)** for payment of which sum, well and truly to be made, we hereby jointly and severally bind ourselves, our heirs, executors, administrators, successors and assigns.

The condition of the above obligation is such that whereas the Principal has submitted to District a certain bid, attached hereto and hereby made a part hereof, to enter into a contract in writing for the ADDAMS ELEMENTARY SCHOOL BUILDING ADDITIONS AND MODERNIZATION, BID NO. 22-01 in strict accordance with Contract Documents.

NOW, THEREFORE,

a. If said bid shall be rejected, or, in the alternative,

b. If said bid shall be accepted and the Principal shall execute and deliver a contract in the form of Agreement attached hereto and shall execute and deliver the required insurance certificates, Performance Bond and Payment Bond in the forms attached hereto (all properly completed in accordance with said bid), and shall in all other respects perform the Contract created by the acceptance of said bid;

Then this obligation shall be void, otherwise the same shall remain in force and effect, it being expressly understood and agreed that the liability of the Surety for any and all default of the Principal hereunder shall be the amount of the obligation as herein stated.

Surety, for value received, hereby stipulates and agrees that no change, extension of time, alteration or addition to the terms of the Contract or the call for bids, or to work to be performed thereunder, or the specifications accompanying the same, shall in anyway affect its obligation under this bond and it does hereby waive notice of any such change, extension of time, alteration or addition to the terms of said Contract or the call for bids, or to the work, or to the specifications.

In the event suit is brought upon this bond by the District and judgment is recovered, the Surety shall pay all litigation expenses incurred by the District in such suit, including reasonable attorney fees to be fixed by the court.

IN WITNESS WHEREOF, the above-bounden parties have executed this instrument under their several seals this _____day of _____________________________. The name and corporate party being hereto affixed and these presents duly signed by its undersigned representative, pursuant to authority of its governing body.

In presence of:

(Principal Seal) PRINCIPAL

BY: ____

Title: ____

____
Address

____

/_____________________________
Telephone No. / Fax No.

≈≈

(Surety Seal) SURETY

By: ____

Title: ____

____
Agent’s Address

____
Telephone No. / Fax No

____
Surety’s Address

____
Surety (Claim) Telephone No. / Fax No.

DESIGNATION OF SUBCONTRACTORS

(TO BE SUBMITTED WITH BID)

In compliance with the Subletting and Subcontracting Fair Practices Act (Public Contract Code section 4100 et seq) and any amendments thereof, each bidder shall set forth below: (a) the name, the location of the place of business, and the California contractor license number of each subcontractor who will perform work or labor or render service to the bidder (prime contractor) in or about the construction of the work or improvement to be performed under this Contract or a subcontractor licensed by the State of California who, under subcontract to the bidder (prime contractor), specially fabricates and installs a portion of the work or improvement according to be detailed drawings contained in the plans and specifications in an amount in excess of one-half of one percent of the bidders (prime contractors) total bid and (b) the portion of the work which will be done by each subcontractor. The bidder (prime contractor) shall list only one subcontractor for each portion as is defined by the bidder (prime contractor) in this bid. **In accordance with Public Contract Code 4104(B), any information requested other than subcontractor's name, location of business, contractor license number, and portion of work may be submitted up to 24 hours after the deadline for receipt of bids.**

If a bidder (prime contractor) fails to specify a subcontractor or if a bidder (prime contractor) specifies more than one subcontractor for the same portion of work to be performed under the contract in excess of one-half of one percent of the bidders (prime contractors) total bid, bidder shall be deemed to have agreed that bidder is fully qualified to perform that portion, and that bidder alone shall perform that portion.

No bidder (prime contractor) whose bid is accepted shall (a) substitute any subcontractor, (b) permit any subcontractor to be voluntarily assigned or transferred or allow it to be performed by anyone other than the original subcontractor listed in the original bid, or (c) sublet or subcontract any portion of the work in excess of one-half of one percent of the bidder (prime contractors) total bid as to which the original bid did not designate a subcontractor, except as authorized in the Subletting and Subcontracting Fair Practices Act. Subletting or subcontracting of any portion of the work in excess of one-half of one percent of the bidders (prime contractors) total bid as to which no subcontractor was designated in the original bid shall only be permitted in cases of public emergency or necessity, and only after a finding reduced to writing as a public record of the District awarding this contract setting forth the facts constituting the emergency or necessity.

Note: If alternate bids are called for and bidder intends to use different or additional subcontractors on the alternates, a separate list of subcontractors must be provided for each such alternate. Identify any such additional subcontractors by alternate bid number.

*** Required at time of bid**

Subcontractors Information

1. ***Company Name:**

***Location of Business:**	Email:
Ph. No. ( )	***License No.:**
***Type of Work:**	Registration No.:

*** Required at time of bid**

Subcontractors Information

2. ***Company Name:**

***Location of Business:**	Email:
Ph. No. ( )	***License No.:**
***Type of Work:**	Registration No.:

3. ***Company Name:**

***Location of Business:**	Email:
Ph. No. ( )	***License No.:**
***Type of Work:**	Registration No.:

4. ***Company Name:**

***Location of Business:**	Email:
Ph. No. ( )	***License No.:**
***Type of Work:**	Registration No.:

5. ***Company Name:**

***Location of Business:**	Email:
Ph. No. ( )	***License No.:**
***Type of Work:**	Registration No.:

6. ***Company Name:**

***Location of Business:**	Email:
Ph. No. ( )	***License No.:**
***Type of Work:**	Registration No.:

7. ***Company Name:**

***Location of Business:**	Email:
Ph. No. ( )	***License No.:**
***Type of Work:**	Registration No.:

*** Required at time of bid**

Subcontractors Information

8. ***Company Name:**

***Location of Business:**	Email:
Ph. No. ( )	***License No.:**
***Type of Work:**	Registration No.:

9. ***Company Name:**

***Location of Business:**	Email:
Ph. No. ( )	***License No.:**
***Type of Work:**	Registration No.:

10. ***Company Name:**

***Location of Business:**	Email:
Ph. No. ( )	***License No.:**
***Type of Work:**	Registration No.:

11. ***Company Name:**

***Location of Business:**	Email:
Ph. No. ( )	***License No.:**
***Type of Work:**	Registration No.:

12. ***Company Name:**

***Location of Business:**	Email:
Ph. No. ( )	***License No.:**
***Type of Work:**	Registration No.:

13. ***Company Name:**

***Location of Business:**	Email:
Ph. No. ( )	***License No.:**
***Type of Work:**	Registration No.:

*** Required at time of bid**

Subcontractors Information

14. ***Company Name:**

***Location of Business:**	Email:
Ph. No. ( )	***License No.:**
***Type of Work:**	Registration No.:

15. ***Company Name:**

***Location of Business:**	Email:
Ph. No. ( )	***License No.:**
***Type of Work:**	Registration No.:

16. ***Company Name:**

***Location of Business:**	Email:
Ph. No. ( )	***License No.:**
***Type of Work:**	Registration No.:

17. ***Company Name:**

***Location of Business:**	Email:
Ph. No. ( )	***License No.:**
***Type of Work:**	Registration No.:

18. ***Company Name:**

***Location of Business:**	Email:
Ph. No. ( )	***License No.:**
***Type of Work:**	Registration No.:

19. ***Company Name:**

***Location of Business:**	Email:
Ph. No. ( )	***License No.:**
***Type of Work:**	Registration No.:

*** Required at time of bid**

Subcontractors Information

20. ***Company Name:**

***Location of Business:**	Email:
Ph. No. ( )	***License No.:**
***Type of Work:**	Registration No.:

21. ***Company Name:**

***Location of Business:**	Email:
Ph. No. ( )	***License No.:**
***Type of Work:**	Registration No.:

22. ***Company Name:**

***Location of Business:**	Email:
Ph. No. ( )	***License No.:**
***Type of Work:**	Registration No.:

23. ***Company Name:**

***Location of Business:**	Email:
Ph. No. ( )	***License No.:**
***Type of Work:**	Registration No.:

24. ***Company Name:**

***Location of Business:**	Email:
Ph. No. ( )	***License No.:**
***Type of Work:**	Registration No.:

25. ***Company Name:**

***Location of Business:**	Email:
Ph. No. ( )	***License No.:**
***Type of Work:**	Registration No.:

NONCOLLUSION DECLARATION

(TO BE EXECUTED AND SUBMITTED WITH BID)

Public Contract Code section 7106

The undersigned declares:

I am the _____ [name/title] of _____ [company], the party making the foregoing bid.

The bid is not made in the interest of, or on behalf of, any undisclosed person, partnership, company, association, organization, or corporation. The bid is genuine and not collusive or sham. The bidder has not directly or indirectly induced or solicited any other bidder to put in a false or sham bid. The bidder has not directly or indirectly colluded, conspired, connived, or agreed with any bidder or anyone else to put in a sham bid, or to refrain from bidding. The bidder has not in any manner, directly or indirectly, sought by agreement, communication, or conference with anyone to fix the bid price of the bidder or any other bidder, or to fix any overhead, profit, or cost element of the bid price, or of that of any other bidder. All statements contained in the bid are true. The bidder has not, directly or indirectly, submitted his or her bid price or any breakdown thereof, or the contents thereof, or divulged information or data relative thereto, to any corporation, partnership, company, association, organization, bid depository, or to any member or agent thereof, to effectuate a collusive or sham bid, and has not paid, and will not pay, any person or entity for such purpose.

Any person executing this declaration on behalf of a bidder that is a corporation, partnership, joint venture, limited liability company, limited liability partnership, or any other entity, hereby represents that he or she has full power to execute, and does execute, this declaration on behalf of the bidder.

I declare under penalty of perjury under the laws of the State of California that the foregoing is true and correct and that this declaration is executed on _____ [date], at _____ [city], _____ [state].

_____

Signature

_____

Print Name

CONTRACTOR′S CERTIFICATE
REGARDING WORKERS COMPENSATION

(TO BE EXECUTED BYAND SUBMITTED WITH BID)

Labor Code Section 3700 Provides:

Every employer except the State shall secure the payment of compensation in one or more of the following ways:

(a) By being insured against liability to pay compensation in one or more insurers duly authorized to write compensation insurance in this State.

(b) By securing from the Director of Industrial Relations a certificate of consent to self-insure, either as an individual employer, or as one employer in a group of employers, which may be given upon furnishing proof satisfactory to the Director of Industrial Relations of ability to self-insure and to pay any compensation that may become due to his or her employees.

I am aware of the provisions of Section 3700 of the Labor Code which require every employer to be insured against liability for Workers Compensation or to undertake self-insurance in accordance with the provisions of that Code and I will comply with those provisions before commencing the performance of the work of this Contract.

CONTRACTOR: _____

By: _____

Type/Print Name

_____

Title

_____

Date

(In accordance with Labor Code section 1860, this certificate must be signed and filed with the awarding body prior to performing any work under this Contract.)

STUDENT SAFETY DECLARATION
Education Code Section 45125.2
(TO BE EXECUTED BYAND SUBMITTED WITH BID)

I, _____ [name/title], declare as follows:

1. I am a representative of _____ [company], and am authorized to make this declaration on its behalf;

2. Pursuant to Education Code section 45125.2, I shall not permit any employee, agent or subcontractor to have more than limited contact with pupils without taking protective steps as set forth in that section and this declaration.

3. I declare that I have taken one or more of the following protective measures pursuant to Education Code section 45125.2 and General Conditions Section 00 73 19:

   a. Neither I, my employees, agents nor subcontractors will have more than limited contact with students.

   b. I have installed or will install a physical barrier at the worksite such that no employee, agent or subcontractor will have more than limited contact with students.

   c. An employee, agent or subcontractor will continually monitor and supervise all employee(s), agent(s) and subcontractor(s) who will have more than limited student contact. I will **have individual(s) processed through the DISTRICT** to submit fingerprints to the Department of Justice (DOJ) for the monitoring and supervisory of employee(s), agent(s) or subcontractor(s). I will not begin work on the job site until a DOJ cleared supervisor submitted through the DISTRICT is provided on the job site, and I certify that none of these supervisory employees, agents or subcontractors will have been convicted of a felony as defined in Education Code section 45122.1.

I know the above of my own personal knowledge and if called as a witness could competently testify thereto. I declare under penalty of perjury that the foregoing is true and correct and that this declaration was executed

on _____ [month/year], _____ [day], at _____ [city], California.

_____
Name of Contractor

By:_____

Refer to Attachment "C" for fingerprinting and I.D. Badge Procedure.

NO PROHIBITED INTEREST/CONFLICTS OF INTEREST DECLARATION

(TO BE EXECUTED AND SUBMITTED WITH BID)

I hereby certify and declare that the undersigned Bidder has reviewed and understands Article 47 of the Information to Bidders, Prohibited Interests/Conflicts of Interest, and that Bidder has no business relationship with any member of the Board of Education ("BOE") that gives any BOE member a financial interest in any contract between Bidder and the District, other than a financial interest that qualifies as a "remote interest" or a "noninterest," and that no Prohibited Interests/Conflicts of Interest exist which violate Article 47 of the Information to Bidders and thereby preclude Bidder from contracting with the Fresno Unified School District. Bidder further understands that the provision of a bid/quote to Bidder over 5 years prior to a BOE member's election or appointment, without the goods or services included in the bid actually being furnished to Bidder, i.e., an unaccepted bid/quote, does not qualify to cause a financial interest to be a "remote interest" as that term is defined in California Government Code section 1091(b)(8).

Consistent with the foregoing and with Article 47 of the Information to Bidders relating to Prohibited Interests/Conflicts of Interest, Bidder understands that if Bidder is awarded the contract for this Project and a Prohibited Interests/Conflict of Interest is thereafter discovered which violates Article 47 of the Information to Bidders, Prohibited Interests/Conflicts of Interest, the contract between Bidder and Fresno Unified School District may be void, and in such event Bidder may be required to disgorge all monies received pursuant to such void contract.

I declare under penalty of perjury under the laws of the State of California that 1) Bidder has reviewed all necessary documents and exercised all due diligence in determining that no Prohibited Interests/Conflicts of Interest exist as set forth above and as described in Article 47 of the Information to Bidders relating to Prohibited Interests/Conflicts of Interest, with respect to the undersigned Bidder, 2) I am authorized by Bidder to execute this form on Bidder's behalf and to make the certifications contained herein, and 3) the representations and certifications set forth herein are true and correct.

Dated: _____, _____.
[Company Name]

_____.
[Name and Title of Bidder's Representative]

_____.
[Signature]

Footnote - Pursuant to:
Article 47 of Information to Bidders
Section 00 72 00.16 of General Conditions

IRAN CONTRACTING ACT CERTIFICATION

(TO BE EXECUTED BYAND SUBMITTED WITH BID)

Public Contract Code sections 2202-2208

Pursuant to Public Contract Code 2204. (a) A public entity shall require a person that submits a bid or proposal to, or otherwise proposes to enter into or renew a contract with, a public entity with respect to a contract for goods or services of one million dollars ($1,000,000) or more to certify, at the time the bid is submitted or the contract is renewed, that the person is not identified on a list created pursuant to subdivision (b) of Section 2203 as a person engaging in investment activities in Iran described in subdivision (a) of Section 2202.5, or as a person described in subdivision (b) of Section 2202.5, as applicable.

To comply with this requirement, please insert your company/entity and Federal ID Number (if available) and complete **one** of the options below. Please note: California law establishes penalties for providing false certifications, including civil penalties equal to the greater of $250,000 or twice the amount of the contract for which the false certification was made; contract termination; and three-year ineligibility to bid on contracts in accordance with Public Contract Code section 2205.

OPTION #1 - CERTIFICATION

I, the official named below, certify I am duly authorized to execute this certification on behalf of the company/entity identified below, and the company/entity identified below is **not** on the current list of persons engaged in investment activities in Iran created by DGS and is not a financial institution extending twenty million dollars ($20,000,000) or more in credit to another person or entity, for 45 days or more, if that other person or company/entity will use the credit to provide goods or services in the energy sector in Iran and is identified on the current list of persons engaged in investment activities in Iran created by DGS in accordance with subdivision (b) of Public Contract Code 2203.

Company Name/Financial Institution (Printed)	*Federal ID Number (or n/a)*
By (Authorized Signature)	
Printed Name and Title of Person Signing	
Date Executed	*Executed in the County of* _____ *in the State of* _____

OPTION #2 – EXEMPTION

Pursuant to Public Contract Code sections 2203(c) and (d), a public entity may permit a vendor/financial institution engaged in investment activities in Iran, on a case-by-case basis, to be eligible for, or to bid on, submit a proposal for, or enters into or renews, a contract for goods and services.

If you have obtained an exemption from the certification requirement under the Iran Contracting Act, please fill out the information below, and attach documentation demonstrating the exemption approval.

Vendor Name/Financial Institution (Printed)	*Federal ID Number (or n/a)*
By (Authorized Signature)	
Printed Name and Title of Person Signing	*Date Executed*

CONTRACTOR'S CERTIFICATION OF NON-USE OF ASBESTOS OR ASBESTOS CONTAINING PRODUCTS OR MATERIALS

To be Executed and Submitted upon Completion of Project

To: Fresno Unified School District

Project: Bid No. 22-01 - ADDAMS ELEMENTARY SCHOOL BUILDING ADDITIONS AND MODERNIZATION

I, _____, declare that I am the party responsible for performing the Work required by the foregoing bid and, by my signature I certify that no asbestos or asbestos-containing products or materials were used in the construction of the above referenced project.

I declare under penalty of perjury under the laws of the State of California that the foregoing is true and correct.

CONTRACTOR: _____

_____
Date

_____
Signature

_____
Type/Print Name

_____
Title

DISABLED VETERAN BUSINESS ENTERPRISES (DVBE) DECLARATION

(TO BE EXECUTED AND SUBMITTED WITH BID)

I, _____, declare that I am _____
(Name of Representative) (Title of Representative)

of _____.
(Business Name of Bidder)

The party making the foregoing proposal declares that the bidder made good faith efforts to meet the participation goal of not less than three percent (3%) of the bid amount to include disabled veteran business enterprises ("DVBE") in the work to be performed. (Education Code section 17076.11) Good faith efforts may be met in one of two ways, either: (1) by complying with the safe harbor provisions of Public Contract Code section 10115.2, subdivision (b), or (2) by complying with Public Contract Code section 10115.2, subdivision (a) by making good faith efforts other than by following the safe harbor language in Public Contract Code section 10115.2, subdivision (b). Under Public Contract Code section 10115.2 subdivision (a), the District will exercise its discretion as to whether the good faith effort has been made. All Bidders shall submit the required DVBE Declaration with bid. (See DVBE Policy in bid documents for additional submittals).

I declare under penalty of perjury under the law of the State of California that the DVBE requirement for this bid was met through one of the two foregoing methods and that the foregoing is true and correct (check applicable box):

☐ I have met the 3% DVBE goal.

☐ I have made a good faith effort to meet the 3% goal.

Executed this _____day of _____, 20____at_____, California.

_____
(Signature of Representative)

NOTE: This declaration does <u>not</u> have to be notarized.

I. DVBE POLICY

A. DISABLED VETERAN BUSINESS ENTERPRISE PARTICIPATION GOAL

Submittals

24 hours after bid opening, Prime Bidder shall provide to DISTRICT Purchasing Department completed DVBE forms including (1) Contractor Good Faith Effort Worksheet and (2) Prime Bidder Certification of Disabled Veteran Business Enterprise Participation.

Definitions

The term "Disabled Veteran Business Enterprise" (DVBE) means a business concern that is certified as a DVBE by the Office of Small and Minority Business.

The term "contract" means an agreement awarded by a school district in which all or part of the funding provided is required to meet DVBE Participation Goals or demonstrate that a good faith effort was made to meet the goal.

The term "bidder" means any person or persons, firm, partnership, corporation or combination thereof who makes an offer, competitive or noncompetitive, with the intent of forming a contract with one or more school districts.

Disabled Veterans

In addition to the school districts contracting requirements, potential contractors seeking Business Enterprise to enter into contracts with school districts for labor, services, materials, supplies, Goals equipment, construction, alteration repair or improvement shall be required to meet a 3 percent participation goal for certified DVBE's or demonstrate that a good faith effort was made to meet the goal.

A Business Enterprise with <u>no opportunity</u> for subcontracting or purchasing of supplies <u>must provide a narrative</u> and be able to demonstrate its inability to subcontract or purchase supplies if an audit occurs.

In order for any sole proprietorship, partnership, corporation or other enterprises to obtain certification or to be counted toward meeting the DVBE contract goals, such business concern must possess current and valid certification as a DVBE through the Office of Small and Minority Business.

For contracts awarded by competitive bid/RFP, a bidder should demonstrate fulfillment of this requirement at or prior to the time of bid opening in order to qualify as a responsive bidder. For contracts not awarded by competitive bid, a potential contractor should demonstrate fulfillment of this requirement prior to entering into the contract.

Any bidder meeting the 3 percent participation goal for DVBE's may be eligible for award of a school district contract. If a bidder is unable to meet the 3 percent participation goal, the bidder may demonstrate a good faith effort by submitting documentation of the following actions:

- Contact was made with state agencies or with local DVBE organizations to identify DVBE's;
- Advertising was published in trade papers and papers focusing on DVBE'S
- Invitations to bid were submitted to potential DVBE contractors; Available DVBE's were considered.

DVBE POLICY (continued)

The school district shall evaluate the effort made by the bidder to seek out and consider DVBE's as potential subcontractors, and/or material or equipment suppliers. In evaluating such effort, the school district should consider documentation of the actions specified above. Based on the evaluation, the school district may make a finding that the 3% DVBE participation goal or the good faith effort requirement has been met. The school district finding in this regard is subject to audit by OPSC. A bidder is eligible for award of a school district contract upon a finding by the school district that a 3% DVBE participation goal or good faith effort to meet the participation goal has been achieved.

If a bidder fails to meet either the goal, a good faith effort, or a narrative explaining its inability to meet the 3% goal, such bidder may be deemed not to be a responsive bidder for purposes of the school district's evaluation of an award of contract and may be ineligible for an award.

II. **SUBSTITUTIONS**

Substitutions

If awarded the contract, the successful bidder must use the DVBE subcontractor and/or supplier proposed in its bid unless the contractor requested a substitution from the school district prior to the execution of the contract and the District has approved such substitution. At a minimum, the request must include:

1. A written explanation of the reason for the substitution,
2. The identity of the person or firm substituted, and
3. Satisfactory evidence that the Contractor has made a good faith effort to satisfy DVBE contract participation certified in the bid.

The school district's approval or disapproval of the substitution is not to be construed as an excuse for noncompliance with any other provision of law including, but not limited to, the Subletting and Subcontracting Fair Practices Act or any other contract requirements relating to substitution of sub-contractors.

FAILURE TO ADHERE TO AT LEAST THE DVBE PARTICIPATION PROPOSED BY THE SUCCESSFUL BIDDER MAY BE CAUSE FOR CONTRACT TERMINATION AND RECOVERY OF DAMAGES UNDER THE RIGHTS AND REMEDIES DUE THE DISTRICT UNDER THE DEFAULT SECTION OF THE CONTRACT.

CONTRACTOR GOOD FAITH EFFORT WORKSHEET

This worksheet is to be used to assist the Contractor in meeting the 3% DVBE participation goal.

BIDDER NAME	BUSINESS ADDRESS	CONTACT PERSON
TELEPHONE NUMBER	SCHOOL DISTRICT	COUNTY

GENERAL INSTRUCTIONS:

This worksheet is to be used to assist you in meeting the 3 percent DVBE participation goal. If specific information is not provided for Parts I through III, you may not meet the test of the "Good Faith Effort" and may not so certify. If you are qualifying based on a "Good Faith Effort" include this form with your bid/proposal to the district.

PART I – CONTACTS

To identify DVBE sub-contractors/suppliers for participation in your bid/proposal, contact should be made with at least one of the following categories. It is recommended that you contact DVBE organizations.

CATEGORY	TELEPHONE NUMBER	DATE CONTACTED	PERSON CONTACTED
1. Office of Small and Minority Business (OSMB)	916/375-4940		
OSMB publishes a list of Disabled Veteran Business Enterprises. Internet: http://www.dgs.ca.gov/osmb	916/322-5060		
2. The California Disabled Veterans Alliance Internet: www.**cadvbe**.org	916-446-3510		
3.. DVBE Organizations (List):			

*Write "recorded message" in this column, if applicable

PART II – ADVERTISEMENTS You should make at least two (2) advertisements, one (1) in a paper that focuses on DVBE and one (1) in a trade paper. Advertisements should be published at least 14 days prior to bid/proposal opening; if you cannot advertise 14 days prior, advertise as soon as possible and provide an explanation. (Advertisements must be published in time to allow for a reasonable response). Advertisements should include that your firm is seeking DVBE participation, the project name and location, your firm's name, your firm's contact person, and phone number.

Attach copies of advertisements to this form.

FOCUS/TRADE PAPER NAME	CHECK ONE		DATE OF ADVERTISEMENT
	TRADE	FOCUS	

PART III – SOLICITATIONS List DVBE subcontractors/suppliers that were invited to bid. Use the following instructions to complete the remainder of this section (read the three columns as a sentence from left to right). If you need additional space to list DVBE solicitations, please use separate page and attach to this form.

IF THE DVBE ……	THEN……	AND……..
was selected to participate	check "yes" in the "SELECTED" column, include the applicable dollar amount in Part III of the Form SAB 515PB	Include a copy of their DVBE letter from OSMB
Was not selected to participate	check "no" in the "SELECTED" column	State why in the "REASON NOT SELECTED" column
Did not respond to your solicitation	check the "NO RESPONSE" column	

DISABLED VETERANS BUSINESS ENTERPRISES CONTACTED	SELECTED		REASONS NOT SELECTED	NO RESPONSE
	YES	NO		

IMPORTANT NOTE:

Please be aware that certification of the "Good Faith Effort" may only be made by completing Parts I, II, and III on both sides of this form. A copy of this form must be retained by you and may be subject to a future audit.

CERTIFICATION

I _____ certify that I am the bidder's Chief Executive Officer and that I have made a diligent effort to ascertain the facts with regard to the representations made herein. Further, I acknowledge that the school district, not the SAB/OPSC, is responsible for determining compliance with the DVBE Program. In making this certification, I am aware of Section 12650 et. seq. of the Government Code providing for the imposition of treble damages for making false claims.

Signature of Chief Executive Officer	Date

III. CONTRACTOR CERTIFICATION OF DISABLED VETERAN

BUSINESS ENTERPRISE PARTICIPATION

To be completed by the Contractor Page 1of 2

A. PART I – IDENTIFICATION

1. **BIDDER'S NAME**	**BUSINESS ADDRESS**	**TELEPHONE NUMBER**
SCHOOL DISTRICT	**COUNTY**	

a. *GENERAL INSTRUCTIONS*

The District requires that all contracts awarded should meet a DVBE participation goal of not less than 3 percent of the contract amount or if your firm cannot meet the 3 percent DVBE participation goal, you should demonstrate a good faith effort to attempt to meet the 3 percent participation. The District is responsible to assure compliance with the DVBE program

PART II – METHOD OF COMPLIANCE WITH DVBE PARTICIPATION GOALS – Include this form and any other applicable documents listed in this table with your bid/proposal. Read the three columns in the table below as sentences from left to right. Check the appropriate box to indicate your method of committing the contract dollar amount. If no box can be checked, your bid/proposal may be deemed non-responsive and disqualified.

NOTE: Architectural, engineering, environmental, land surveying or construction management firms must indicate their method of compliance by marking the appropriate box A, B, C, or D after selection by the District and before the contract is signed.

YOUR BUSINESS ENTERPRISE	**AND YOU**	**AND YOU**
A. ☐ is Disabled Veteran owned and your force, will perform at least 3 percent of this contract	will include a copy of your DVBE letter from the office of Small Minority Business (OSMB).	
B. ☐ Is Disabled Veteran owned but is unable to perform the 3 percent of this contract with your forces	will use DVBE subcontractors/ suppliers to bring the contract participation to at least 3 percent	will include copy of each DVBE's letter from OSMB (including yours, if applicable).
C. ☐ is not Disabled Veteran owned	will use DVBE subcontractors/ suppliers for at least 3 percent of this contract	
D. ☐ is unable to meet the required Participation goals	will complete a Good Faith Effort to obtain DVBE participation	will include the form Prim Bidder's Good Faith Effort Worksheet

NOTE: An Office of Small and Minority Business (OSMB) letter must be attached for each DVBE participating in the contract. The DVBE letter is obtained by application through OSMB and must be provided at the time of bid opening. If the letter is not provided, the bid may be deemed non-responsive and may be ineligible for award of the contract.

IV.**PART III – DVBE DOLLAR PARTICIPATION OF BID/PROPOSAL – Architectural, engineering, environmental, land surveying management firms complete this part after selection by the district and before the contract is signed.**

Show deductive alternate(s) in parenthesis. For more alternates/base bids, use a separate page to show items.

A. If your business enterprise is a DVBE, list in the appropriate column the total dollar amount of your bid to be performed by your own participation.

B. List all your DVBE subcontractors/suppliers. Enter in the appropriate column the dollar amount for each of your subcontractors/suppliers.

1. Enter the total of Lines A and B for each column.

D. Enter the dollar amount of the bid/proposal to be performed by non-DVBE firms. Note: This line is the sum of the prime and subcontractor(s) non-DVBE dollar participation.

E. Enter the Sum of the column totals from Line C and Line D. Note: Please be Aware that the final determination of DVBE compliance is made based on the contract amount resulting from the district's acceptance or rejection of alternates.

	BASE BID/PROPOSAL	**ALTERNATE #1**	**ALTERMATE #2**	**ALTERNATE #3** OR BASE BID B	**ALTERNATE #4** OR BASE BID C	**ALTERNATE #5** **(Modernization or Reconstruction Only)**
A. Contractor, if DVBE (own participation)	$	$	$	$	$	$
B. DVBE Subcontractor or Supplier						
1.						
2.						
3.						
4.						
C. Subtotal (A & B)						
D. Non-DVBE						
E. Total Bid						

SAMPLE AGREEMENT

THIS AGREEMENT dated as of _____ ("Effective Date"), is made and entered into by and between the Fresno Unified School District ("DISTRICT"), and _____ ("CONTRACTOR").

For the consideration stated below, DISTRICT and CONTRACTOR agree as follows:

1.The complete Contract includes and incorporates by reference herein all of the "Contract Documents" including: the Contract, Notice to Bidders, Information to Bidders, Bid Bond, Bid Form, Designation of Subcontractors, Certificate Regarding Workers' Compensation, Noncollusion Declaration, No Prohibited Interest/Conflict of Interest Declaration, Student Safety Declaration, Iran Contracting Act Certification Form, Performance Bond, Payment Bond, Escrow Agreement for Security Deposits, DVBE Policy and related Forms (if applicable), Asbestos Certification, Insurance Policies, General Conditions, Supplementary General Conditions if any, General Requirements, Drawings, Plans, Specifications, the Contract, and all modifications, addenda, bulletins, and amendments issued hereto for and hereafter, Notice to Proceed, and any and all certifications, declarations, Guarantees and affidavits that are required by bid specifications as referenced in Section 00 72 00.01(k) of the General Conditions. The Contract Documents are complementary and what is called for by any one shall be as binding as if called for by all.

2.CONTRACTOR shall perform everything required to be performed and shall provide and furnish all the labor, materials, necessary tools, expendable equipment and all utility and transportation services required for the ADDAMS ELEMENTARY SCHOOL BUILDING ADDITIONS AND MODERNIZATION

All of said work to be performed and materials furnished shall be completed in a good, workmanlike manner in strict accordance with the plans, specification, drawings and all provisions of the complete Contract as herein defined. The CONTRACTOR shall be liable to the DISTRICT for any damages arising as a result of a failure to fully comply with this obligation, and the CONTRACTOR shall not be excused with respect to any failure to so comply by any act or omission of the Architect, Engineer, Inspector, Division of the State Architect, or representative of any of them, unless such act or omission actually prevents the CONTRACTOR from complying with the requirements of the Contract Documents, and unless the CONTRACTOR protests, at the time of such alleged prevention, that the act or omission is preventing the CONTRACTOR from fully complying with the Contract Documents. Such protest shall not be effective unless reduced to writing and filed with the DISTRICT within (3) working days of the date of occurrence of the act or omission preventing the CONTRACTOR from fully complying with the Contract Documents. All work to be performed and materials furnished shall be in strict accordance with the Contract Documents.

3.As full consideration for the faithful performance of the contract, DISTRICT shall pay to CONTRACTOR, subject to any additions or deductions as provided in the Contract Documents, the sum of _____, ($XX,XXX.XX) which is the total of the following amounts stated in the bid form for **combined total of Base Bid plus Add Alternate 1A**.

4. The Contract Time shall commence on the date stated in the DISTRICT'S Notice to Proceed and shall be completed within **730** Calendar days from Notice to Proceed date. All work to be done concurrently and subject to all phasing and milestone dates. CONTRACTOR shall not commence Work on the Project site before the effective date of the accepted insurance and bonds. The established date of commencement of the Contract Time will not be changed/delayed due to any delay in the issuance or effective date of such insurance and/or bonds.

5.Payment of undisputed contract amounts is contingent upon CONTRACTOR furnishing DISTRICT with a release of all claims against the DISTRICT arising out of the contract payment. Any disputed contract claim must be specifically excluded from the operation of the release.

6.**Time is of the essence.** In accordance with Government Code Section 53069.85, CONTRACTOR agrees to forfeit and pay to DISTRICT the sum of One Thousand Five Hundred dollars ($1,500) for each calendar day completion is delayed beyond the time specified in paragraph 4 of this Agreement, which said amount shall be deducted from any payments due or to become due to CONTRACTOR. Notwithstanding any provision of the Contract Documents to the contrary, liquidated damages shall be imposed until final completion of the entire project in conformity with all the terms, conditions and requirements of the Contract Documents. Any use or occupancy of any portion of the project by DISTRICT prior to final completion thereof shall not obviate or extinguish said imposition of liquidated damages. Time extensions may be granted by the DISTRICT as provided in the General Conditions.

In addition to any liquidated damages which may be assessed, if the CONTRACTOR fails to complete the project within the time period provided in the contract documents and if as a result DISTRICT finds it necessary to acquire alternate facilities pending completion of the project, CONTRACTOR shall pay all costs and expenses related to the acquisition and use of the alternate facilities incurred by DISTRICT. The costs and expenses may include, but are not limited to such items as rental payments, inspection fees and additional architectural fees. These costs and expenses may be retained by DISTRICT from any payments otherwise due to CONTRACTOR.

"Liquidated Damages," is expressly understood and agreed to by the parties hereto:

____Contractor's Initials

____District's Initials

7.During the life of this contract, CONTRACTOR shall take out and maintain insurance as required by the Contract Documents.

8.To perform the work required by this agreement, CONTRACTOR must possess the type of contractor's license required by the Contract Documents.

9.Contractor acknowledges that he is an independent CONTRACTOR and not an employee, agent, or representative of DISTRICT. CONTRACTOR acknowledges that he shall be solely responsible for and shall indemnify and hold DISTRICT harmless from all matters relating to payment of CONTRACTOR'S employees, subcontractors and others, including compliance with Social Security, withholding and all other laws and regulations governing such matters.

The complete Contract, as set forth in paragraph 1. Herein above, constitutes the entire agreement of the parties. No other agreements, oral or written, pertaining to the Project to be performed, exists between the parties. This Agreement/Contract can be modified only by an amendment in writing, signed by both parties.

The parties have executed this agreement by the signatures of their authorized representatives on the dates indicated.

GOVERNING BOARD,
FRESNO UNIFIED SCHOOL DISTRICT

By _____

Santino Danisi, Chief Financial Officer
Type Name

CONTRACTOR _____

By _____

_____
Type Name

PREVIOUSLY APPROVED AS TO FORM
BY GENERAL COUNSEL, FRESNO UNIFIED SCHOOL DISTRICT

(Corporate Seal)

Escrow Account No. _____

ESCROW AGREEMENT FOR SECURITY DEPOSIT IN LIEU OF RETENTION

This Escrow Agreement is made and entered into by and between the Fresno Unified School District (hereinafter called the "DISTRICT"), whose address is 4498 N. Brawley, Fresno, California 93722, and _____ (hereinafter called "CONTRACTOR"), whose address is_____ and_____ (hereinafter called "Escrow Agent"), whose address is_____.

For the consideration described below, the DISTRICT, CONTRACTOR and Escrow Agent agree as follows for Bid No. 22-01, ADDAMS ELEMENTARY SCHOOL BUILDING ADDITIONS AND MODERNIZATION:

1. Pursuant to Section 22300 of the Public Contract Code of the State of California, CONTRACTOR has the option to deposit securities with Escrow Agent as a substitute for retention earnings required to be withheld by DISTRICT pursuant to the construction Contract ("Contract") entered into between the DISTRICT and CONTRACTOR for Bid No. 22-01, ADDAMS ELEMENTARY SCHOOL BUILDING ADDITIONS AND MODERNIZATION in the amount of $_____, dated _____. When CONTRACTOR deposits the securities as a substitute for Contract earnings, the Escrow Agent shall notify the DISTRICT within 10 days of the deposit. The market value of the securities at the time of the substitution shall be at least equal to the cash amount then required to be withheld as retention under the terms of the Contract between the DISTRICT and CONTRACTOR. Securities shall be held in the name of the DISTRICT, and shall designate the CONTRACTOR as the beneficial owner.

2. The DISTRICT shall make progress payments to the CONTRACTOR for funds which otherwise would be withheld from progress payments provided that the Escrow Agent holds securities in the form and amount specified above.

3. Alternatively, upon written request of the CONTRACTOR, the DISTRICT shall make payments of the Contract retention directly to the Escrow Agent until this escrow is terminated. When the DISTRICT makes payments of earned retentions directly to the Escrow Agent, the Escrow Agent shall hold them for the benefit of the CONTRACTOR until the time the escrow created under this Escrow Agreement is terminated. The CONTRACTOR may direct the investment of the payments into those securities specified in Public Contract Code section 22300, subdivision (c). Escrow Agent shall advise DISTRICT of the types of eligible securities to which the escrow funds have been invested. All terms and conditions of this Escrow Agreement and the rights and responsibilities of the parties shall be equally applicable and binding when the DISTRICT pays the Escrow Agent directly.

4. CONTRACTOR shall be responsible for paying all fees for the expenses incurred by Escrow Agent in administering the escrow account. These expenses and payment terms shall be determined by the CONTRACTOR and Escrow Agent.

5. The interest earned on the securities or the money market accounts held in escrow and all interest earned on the interest, shall be for the sole account of CONTRACTOR and shall be subject to withdrawal by CONTRACTOR at any time and from time to time, without notice to the DISTRICT.

6. Upon providing written authorization to the Escrow Agent, executed by an authorized representative of the DISTRICT, CONTRACTOR may withdraw all or any part of the principal contained in the escrow account. The written authorization executed by the DISTRICT shall specify the amount that may be withdrawn by the CONTRACTOR from the escrow account.

7. The DISTRICT shall have the right to draw upon the securities or earned retention contained in the escrow account upon notifying the Escrow Agent that CONTRACTOR has defaulted or otherwise breached the parties construction Contract. Upon seven days prior written notice to the Escrow Agent from the DISTRICT of the default/breach, the Escrow Agent shall immediately convert, if such be the case, the securities to cash, and shall distribute the cash and/or earned retention as instructed by the DISTRICT.

8. Notwithstanding any provision of this Escrow Agreement to the contrary, for a period of 35 days following the recordation of the Notice of Completion (And Acceptance), DISTRICT shall have unlimited access to the securities/earned retention to respond to stop payment notice claims, punch list and/or warranty items, and contract change orders. Pursuant to this paragraph, DISTRICT may withdraw from the escrow sufficient cash to cover 125% of the principal amount claimed in any stop payment notice, 150% of the estimated amount necessary to remedy any punch list and/or warranty items, and an amount reflective of adjusting retention to change order revised contract price. To withdraw funds, DISTRICT shall present to the Escrow Agent copies of any and all stop payment notices and/or a letter from its ARCHITECT/ENGINEER concerning the punch list and/or warranty items and/or approved change order, together with written notification from DISTRICT making demand for the funds. In response to DISTRICT'S demand, upon seven (7) days written notice, Escrow Agent shall immediately convert sufficient securities to cash and distribute the cash and/or earned retention to DISTRICT. In no event will Escrow Agent have any obligation to pay to DISTRICT more than the amount Escrow Agent is holding. DISTRICT'S rights under this paragraph are in addition to and do not supplant any other rights or remedies contained in this section or the remainder of this Escrow Agreement.

9. Upon receipt of written notification from the DISTRICT certifying that the Contract is final and complete and that the CONTRACTOR has complied with all requirements and procedures applicable to the Contract, Escrow Agent shall release to CONTRACTOR all securities and earned retentions and interest on deposit less escrow fees and charges of the escrow account. The escrow shall be closed immediately upon disbursement of all monies and securities on deposit and payment of fees and charges.

10. Escrow Agent shall rely on the written notifications from DISTRICT and CONTRACTOR pursuant to the provisions of this Agreement and DISTRICT and CONTRACTOR shall hold Escrow Agent harmless from Escrow Agent's release and disbursement of the securities and interest as set forth above.

11. The names of the persons authorized to give written notice or to receive written notice or to receive written notice on behalf of the DISTRICT and on behalf of CONTRACTOR in connection with this Agreement and exemplars of their respective signatures are as follows:

On behalf of DISTRICT

Chief Operations Officer
Title

Karin Temple
Name

Signature

Fresno Unified School District
Name of Company

4498 N. Brawley Avenue
Address

Fresno, California 93722

On behalf of CONTRACTOR

Title

Name

Signature

Name of Company

Address

On behalf of ESCROW AGENT

Title

Name

Signature

Name of Escrow Company

Address

Phone No. Fax No

At the time the escrow account is opened, the DISTRICT and CONTRACTOR shall deliver to the Escrow Agent a fully executed counterpart of this Agreement.

As WITNESSES, the parties have executed this Agreement by their proper officers on the first date shown below.

DISTRICT	CONTRACTOR
Chief Operations Officer	
Title	Title
Karin Temple	
Name	Name
Signature	Signature
Date	Date
	Phone No. Fax No.

Bond No. _____ _____

SAMPLE PERFORMANCE BOND

BE ADVISED THAT:

The **Fresno Unified School District** of Fresno County, California ("District") has awarded to _____ as Principal ("Principal") the Contract for the work described as follows for ADDAMS ELEMENTARY SCHOOL BUILDING ADDITIONS AND MODERNIZATION, Bid No. 22-01. The Principal is required to furnish a bond in connection with the Contract guaranteeing faithful performance;

We, the undersigned Contractor, as Principal, and Surety, are held and firmly bound to the District in the sum of _____, ($XX,XXX.XX) this amount being not less than one hundred percent (100%) of the total amount payable by the District under the terms of the Contract awarded by the District to the Contractor/Principal), lawful money of the United State of America, for payment of which sum well and truly to be made, we bind ourselves, our heirs, executors, administrators and successors, jointly and severally, firmly by these presents.

THE CONDITION OF THIS OBLIGATION IS SUCH THAT, if the hereby bonded Contractor/Principal, its heirs, executors, administrators, successors, or assigns, shall in all things stand to and abide by and well and truly keep and perform all the undertakings, terms, covenants, conditions, and agreements in the said Contract and any alteration thereof, made as therein provided, including, but not limited to, the provisions regarding contract duration and liquidated damages, all within the time and in the manner therein designated in all respects according to their true intent and meaning, then this obligation shall become null and void, otherwise, it shall be and remain in full force and effect.

Whenever Contractor/Principal shall be, and is declared by the District to be, in default under the Contract, the District having performed the District's obligations thereunder, the Surety shall promptly remedy the default, or shall promptly:

1. Complete the contract in accordance with its terms and conditions; or

2. Obtain a bid or bids for completing the Contract in accordance with its terms and conditions, and upon determination by Surety of the lowest responsive and responsible bidder, arrange for a contract between such bidder and the District, and make available, as work progresses, sufficient funds to pay the cost of completion less the balance of the Contract price, but not exceeding, including other costs and damages for which Surety may be liable hereunder, the amount set forth above. The term "balance of the Contract price," as used in this paragraph, shall mean the total amount payable to Contractor/Principal by the District under the Contract and any modifications thereto, less the amount previously, properly paid by the District to the Contractor/Principal.

Surety expressly agrees that the District may reject any contractor or subcontractor which may be proposed by Surety in fulfillment of its obligations in the event of default by the principal.

Surety shall not utilize Contractor/Principal in completing the Contract no shall Surety accept a bid from Contractor/Principal for completion of the Project if the District, when declaring the Contractor/Principal in default, notifies Surety of the District's objection to Contractor's/Principal's further participation in the completion of the Project. No right of action shall accrue on this bond to or for the use of any person or corporation other than the District named herein or the successors or assigns of the District. Any suit under this bond must be instituted when the applicable statute of limitations period as provided by the laws of the State of California.

FURTHER, the said Surety, for value received, hereby stipulates and agrees that no change, extension of time, alteration or modification of the Contract, or of the work to be performed thereunder, shall in any way affect its obligations on this bond; and it does hereby waive notice of any change, extension of time, alteration or modification of the Contract or of the work to be performed thereunder.

Contractor/Principal and Surety agree that if the District is required to engage the services of an attorney in connection with the enforcement of this bond, each shall pay District/s reasonable attorney fees incurred, with or without suit, in addition to the above amount.

AS WITNESSES, we have affixed our signatures and seals this _____ day of ___________________________.

(Principal Seal) PRINCIPAL

BY: ____

Title: ____

____
Address

____

____
Telephone No. / Fax No.

≈≈

(Surety Seal) SURETY

By: ____

Title: ____

____
Address

____
Telephone No. / Fax No

____
Surety’s Address

____
Surety (Claim) Telephone No. / Fax No.

Bond No. _____

SAMPLE PAYMENT BOND FOR PUBLIC WORKS

BE ADVISED THAT:

The **Fresno Unified School District** of Fresno County, California ("District"), by appropriate action, has awarded to _____ as Principal ("Principal"), the Contract for the work described as follows for ADDAMS ELEMENTARY SCHOOL BUILDING ADDITIONS AND MODERNIZATION, Bid No. 22-01.

The PRINCIPAL is required by Chapter 7, commencing with Section 9550 of the California Civil Code to furnish a bond in connection with the Contract;

THEREFORE, we, the PRINCIPAL and Surety as Surety, are held and firmly bound unto the DISTRICT in the penal sum of _____, ($XX,XXX.XX), lawful money of the United States of America for the payment of which sum well and truly to be made, we bind ourselves, our heirs, executors, administrators, successors and assigns, jointly and severally, firmly by this bond.

THE CONDITION OF THIS OBLIGATION IS SUCH that if said Principal, or its heirs, executors, administrators, successors, or assigns, or a subcontractor, shall fail to pay any person or persons named in California Civil Code Section 9100 or fail to pay for any materials, or other supplies, used in, upon, for, or about the performance of the work contracted to be done, or for any work or labor thereon of any kind, or for amounts due under the California Unemployment Insurance Code, with respect to work or labor thereon of any kind, or shall fail to deduct, withhold, and pay over to the California Employment Development Department, any amounts required to be deducted, withheld, and paid over by Section 13020 of the California Unemployment Insurance Code with respect to work and labor thereon of any kind, the Surety will for the same, in or to an amount not exceeding the amount herein above set forth, and also will pay in case suit is brought upon this bond, such reasonable attorney fees and other litigation expenses and costs as shall be fixed by the court, awarded and taxed as provided in Chapter 7 commencing with Section 9550 of the California Civil Code.

This bond shall inure to the benefit of any of the persons named in Section 9100 of the California Civil Code, so as to give a right of action to such persons or their assigns in any suit brought upon this bond.

It is further stipulated and agreed that the Surety on this bond shall not be exonerated or released from the obligation of this bond by any change, extension of time for performance, addition, alteration or modification in, to, or of any Contract, plans, specifications, or agreement pertaining or relating to any scheme or work of improvement described above or pertaining or relating to the furnishing of labor, materials, or equipment for it, nor by any change or modification of any terms of payment or extension of the time for any payment pertaining or relating to any scheme or work of improvement described above, nor by any rescission or attempted rescission of the Contract, agreement or bond, nor by any conditions precedent or subsequent in the bond attempting to limit the right of recovery of claimants otherwise entitled to recover under any such contract or agreement or under the bond, nor by any fraud practiced by any person other than the claimant seeking to recover on the bond and that this bond shall be construed most strongly against the Surety and in favor of all persons for whose benefit it is given, and under no circumstances shall Surety be released from liability to those for whose benefit the bond has been given, by reason of any breach of Contract between the District and original Contractor or on the part of any oblige named in the bond, but the sole condition of recovery shall be that claimant is a person described in Section 9100 of

the California Civil Code and has not been paid the full amount of its claim. The Surety hereby waives notice of any changes, extension of time, addition, alteration, or modification mentioned above.

AS WITNESS, we have affixed our signatures and seals this _____ day of ____________________.

(Principal Seal) PRINCIPAL

BY: ______________________________

Title: ______________________________

____
Address

____

____
Telephone No. / Fax No.

____

≈≈≈

(Surety Seal) SURETY

By: ______________________________

Title: ______________________________

____
Address

____
Telephone No. / Fax No

____
Surety's Address

____
Surety (Claim) Telephone No. / Fax No.

DIV 00 - GENERAL CONDITIONS

00 72 00. Information and Services Required of the District

The DISTRICT shall secure and pay for easements for permanent structures or permanent changes in existing facilities unless specified otherwise on the bid plans and specifications

00 72 00. 0 Amendments

The terms of this Contract shall not be waived, altered, modified, supplemented or amended in any manner whatsoever except by written agreement signed by both parties.

00 72 00. 00 Provisions Required by Law Deemed Inserted

Every provision of law and clause required by law to be inserted in this contract shall be read and enforced as though it were included and if through mistake or otherwise, any provision is not inserted or is not correctly inserted, upon application of either party the Contract shall be amended to make the insertion or correction. All references to statutes and regulations shall include all amendments, replacements and enactments on the subject which are in effect as of the date of this Contract and any later changes which do not materially and substantially alter the positions of the parties.

00 72 00. 01 Definitions

A. Action of the governing board is a vote of a majority of the membership in a lawful meeting.

B. Addenda are the changes in plans, specifications, drawings and other Contract Documents which have been authorized in writing by the DISTRICT or ARCHITECT, and which alter, explain, modify, correct, add to, delete from or clarify the Contract Documents prior to the bid deadline.

C. Applicable Laws means all federal, state, and local statutes, laws, ordinances, codes, provisions, rules, and regulations pertaining to the furnishing of or the performance of the Work.

D. Application for Payment means the DISTRICT approved invoice form along with other supportive documentation as specified in the Contract Documents to be certified and submitted by CONTRACTOR in requesting progress and/or final payment.

E. ARCHITECT is the person, firm, corporation or entity licensed to practice architecture as identified in the Bidding Documents.

F. ENGINEER is the person, firm, corporation or entity registered to practice an engineering discipline as identified in the Bidding Documents.

G. Approval means written authorization by ARCHITECT/ENGINEER or DISTRICT for specific applications within the Contract.

H. As shown, as indicated, as detailed refer to drawings accompanying the specifications.

I. Bidding Documents means all documents made available to bidders.

J. Contract means the entire and integrated agreement between the parties hereto and supersedes prior negotiations, representations, or agreements, either written or oral. The Contract may be amended or modified only by a written

Modification. The Contract Documents form the Contract. The Contract Documents shall not be construed to create a contractual relationship of any kind between the Architect and Contractor, between the Owner and any Subcontractor or Sub-subcontractor, or between any persons or entities other than the Owner and the Contractor.

K. Contract Documents include the Contract and all Contract Documents, including: the Contract, Notice to Bidders, Information to Bidders, Bid Bond, Bid Form, Designation of Subcontractors, Certificate Regarding Workers' Compensation, Noncollusion Declaration, No Prohibited Interest/Conflict of Interest Declaration, Student Safety Declaration, Iran Contracting Act Certification Form, Performance Bond, Payment Bond, Escrow Agreement for Security Deposits, DVBE Policy and related Forms (if applicable), Asbestos Certification, Insurance Policies, General Conditions, Supplementary General Conditions if any, General Requirements, Drawings, Plans, Specifications, the Contract, and all modifications, addenda, bulletins, and amendments, Notice to Proceed, and any and all certifications, declarations, Guarantees and affidavits that are required by bid specifications.

L. Contractor, District, or Owner are those mentioned as such in the Agreement ("CONTRACTOR," "DISTRICT"). "Owner" means "DISTRICT." Throughout the Contract Documents, they are treated as if they are of singular number and neuter gender.

M. Day, as used in the Contract Documents shall mean calendar day.

N. Inspector of Record ("IOR") is the Project Inspector approved by the Division of State Architect and employed by the DISTRICT in accordance with the requirements of Title 24 of the California Code of Regulations.

O. Locality in which the work is performed means the county in which the public work is performed.

P. Project is the undertaking planned by DISTRICT and CONTRACTOR as provided in the Contract Documents.

Q. Record Drawings is a revised set of clean legible drawings submitted by a CONTRACTOR upon completion of a project or a particular job. They reflect all changes made in the specifications and working drawings during the construction process, and show the exact dimensions, geometry, and location of all elements of the work completed under the contract and stamped "Record Drawings". Also called as-built drawings or just as-builts.

R. Provide includes "provide complete in place," that is, "furnish and install."

S. Safety orders include those issued by the Division of Industrial Safety and OSHA Safety and Health Standards for Construction.

T. Subcontractor includes those having a direct contractual relationship with the CONTRACTOR and those who furnish materials worked to a special design according to plans, drawings, and specifications of this work, but does not include those who merely furnish material not so worked.

U. Surety is the person, firm, or corporation that executes, as Surety, the Contractor's Bid Bond, Performance Bond and Payment Bond.

V. The Work shall include all labor, materials, services and equipment necessary for the CONTRACTOR to fulfill all of its obligations pursuant to the Contract Documents. It shall include the initial obligation of any CONTRACTOR or Subcontractor, who performs any portion of the Work, to visit the Site of the proposed Work with DISTRICT's notification, a continuing obligation after the commencement of the Work to fully acquaint and familiarize itself with the conditions as they exist and the character of the operations to be carried on under the Contract Documents, and

make such investigation as it may see fit so that it shall fully understand the facilities, physical conditions, and restrictions attending the Work under the Contract Documents, including the character, quality, and quantity of the surface and subsurface materials or obstacles to be encountered. Each such CONTRACTOR or Subcontractor shall also thoroughly examine and become familiar with the Drawings, Specifications, and associated bid documents. The "Site" refers to the grounds of the Project as defined in the Contract Documents and such adjacent lands as may be directly affected by the performance of the Work.

W. Commissioning During the construction and the warranty period, CONTRACTOR shall perform a systematic process of ensuring that all building systems perform interactively according to the contract documents, and the DISTRICT's objectives and operational needs with actual verification through review, testing and documentation of performance and sequences of operation, and inclusive of but not limited to start-up execution, functional testing, manufacturer checklists, furnishing submittals, shop drawings, warranty documentation, and as-built drawings related to commissioned equipment.

00 72 00. 02 Drawings and Specifications

A. The Contract Documents are complementary and what is required by one shall be as binding as if required by all. Any item of work mentioned in the Specifications and not shown on the Drawings, or shown on the Drawings and not mentioned in the Specifications, shall be provided by Contractor as if shown or mentioned in both. The Contract is intended to include all labor and materials, equipment, services, and transportation necessary for the proper execution of the Work. It is the intent of these Contract Documents that the work performed under the Contract shall result in a complete operating system in satisfactory working condition with respect to the functional purposes of the installation, and no extra compensation will be allowed for anything omitted but fairly implied. Except as otherwise expressly provided in these "General Conditions" or "General Requirements," materials or work described in words which have a well-known technical or trade meaning shall be deemed to refer to those recognized standards. The CONTRACTOR shall carefully examine all Contract Documents and shall immediately report to the ARCHITECT/ENGINEER any error, inconsistency or omission he may discover. The CONTRACTOR shall do no work without proper drawings and specifications or interpretations.

B. Drawings and specifications are intended to comply with all Applicable Laws, including but not limited to all laws, ordinances, rules and regulations of constituted authorities having jurisdiction, and where referred to in the Contract Documents, said laws, ordinances, rules and regulations shall be considered as a part of the Contract within the limits specified. The CONTRACTOR shall bear all expenses of correcting work done contrary to said laws, ordinances, rules and regulations if the CONTRACTOR performed same (1) without first consulting the ARCHITECT in writing for further instructions regarding said work, or (2) disregarded the ARCHITECT'S instructions regarding said work.

C. Interpretations: Figured dimensions on drawings shall govern, but work not dimensioned shall be directed by ARCHITECT. Work not particularly shown or specified shall be the same as similar parts that are shown or specified. Large scale details as to shape and details of construction shall take precedence over smaller scale drawings. Specifications shall govern as to materials, workmanship and installation procedures. In the event there is a discrepancy between the various Contract Documents, the order of precedence shall be: (1) DISTRICT's Special Conditions (if any); (2) DISTRICT's General Conditions and General Requirements; (3) DISTRICT's specifications; (4) DISTRICT's drawings. Without limiting Contractor's obligation to identify conflicts for resolution by the ARCHITECT, it is intended that the more stringent, higher quality, more costly or expensive interpretation and greater quantity of Work shall apply. Drawings and specifications are intended to be fully cooperative and to agree. CONTRACTOR shall promptly notify the ARCHITECT/ENGINEER in writing. The specification calling for any higher quality material or workmanship shall prevail.

D. Questions regarding interpretation of drawings and specifications shall be clarified by the ARCHITECT/ENGINEER. Should the CONTRACTOR commence work on any part without seeking clarification in writing, CONTRACTOR waives any claim for extra work or damages as a result of any ambiguity, conflict, or lack of information, and CONTRACTOR may be required to remove and replace such work if the ARCHITECT/ENGINEER deems it to be necessary.

E. Organization of Specifications: Organization of the specifications into divisions, and sections, and arrangement of drawings shall not control the CONTRACTOR in dividing the work among subcontractors or in establishing the extent of work to be performed by any trade.

F. Copies Furnished – Drawings/Specifications: CONTRACTOR will be furnished copies of the drawings and specifications as set forth in the Information to Bidders.

G. Ownership of Drawings: All plans, drawings, designs, specifications, and other incidental architectural and engineering work or materials and other Contract Documents and copies thereof furnished by DISTRICT -are DISTRICT's property. They are not to be used by CONTRACTOR, Subcontractor(s), or material or equipment supplier(s) in other work and are to be returned to DISTRICT upon request at the completion of the Project, and may be used by DISTRICT as it may require, without any additional costs to DISTRICT. Neither CONTRACTOR, Subcontractor(s), nor material nor equipment supplier(s) shall own or claim a copyright in the Drawings, Specifications, or other Contract Documents.

H. Detail Drawings and Specifications: In case of ambiguity, conflict, difference, discrepancy, or lack of information between the various Contract Documents, then the priorities listed in "Drawings and Specifications" shall govern unless noted otherwise herein. Without limiting CONTRACTOR's obligation to identify conflicts for resolution, it is intended the more stringent, higher level of quality, greater quantity and/or higher level of workmanlike manner shall prevail and control. If ambiguities or discrepancies in the Contract Documents are not corrected by Addenda during the bid period, CONTRACTOR represents and warrants the scope and amount of its bid includes all materials, supplies, equipment, services, facilities, apparatus, and methods of construction that provides for the higher cost, quantity and quality. If appropriate under the circumstances, ARCHITECT/ENGINEER shall furnish additional instructions and/or drawings, as the case may be, necessary for the proper execution of the work. All such drawings and instructions shall be consistent with this Contract. Such additional instructions shall be furnished with reasonable promptness, provided that CONTRACTOR informs the ARCHITECT/ENGINEER of the relationship of the request to the critical path of construction.

I. Execution of Work: Work shall be executed in conformity with those instructions, drawings and/or specifications and CONTRACTOR shall do no work without proper instructions, drawings and specifications.

J. Examination of Contract Documents and other Information: In addition to all pre-bid obligations of CONTRACTOR, and prior to commencing any and each portion of the Work, CONTRACTOR shall carefully examine all of the Contract Documents and any other information available to CONTRACTOR relative to materials and methods of construction of the Work and/or Project requirements. CONTRACTOR shall file any needed Request for Information or Clarification a minimum of nine (9) days prior to the commencement of any Work for any perceived or alleged error, inconsistency, ambiguity, or lack of details or explanation of the intent of the Contract Documents. If CONTRACTOR performs any portion of the Work for which the Contract Documents are ambiguous, inconsistent, lack sufficient details or are otherwise in error, and CONTRACTOR knew or should have known of such defects in the Contract Documents before commencing the Work in question, then CONTRACTOR shall bear any and all resulting costs including, without limitation, the cost of correction, without a corresponding adjustment to the Contract Amount, Milestones, and/or the Contract Time. If CONTRACTOR performs, permits, or causes the performance of

any portion of the Work under those portions of the Contract Documents prepared by or on behalf of CONTRACTOR which is in error, inconsistent or ambiguous, or not sufficiently detailed or explained, CONTRACTOR shall bear any and all resulting costs, including, without limitation, the cost of correction, without a corresponding adjustment to the Contract Amount, Milestones, and/or the Contract Time.

00 72 00. 03 Assignment

The CONTRACTOR shall not assign, transfer, convey, sublet or otherwise dispose of this Contract or of its rights, title or interest in or to the same or any part thereof. If the CONTRACTOR shall assign, transfer, convey, sublet, or otherwise dispose of the Contract or its right, title or interest therein, or any part thereof, such attempted or purported assignment, transfer, conveyance, sublease or other disposition shall be null, void and of no legal effect whatsoever, and shall not exonerate CONTRACTOR's surety(ies), and the Contract may, at the option of the DISTRICT, be terminated, revoked and annulled, and the DISTRICT shall thereupon be relieved and discharged from any and all liability and obligations growing out of the same to the CONTRACTOR, and to its purported assignee or transferee.

00 72 00.04 Performance/Payment Bond

Unless otherwise specified in any Special Conditions, CONTRACTOR shall furnish a performance bond and payment bond each in the amount equal to 100% of the Contract amount. The performance bond shall guarantee the prompt, competent and faithful performance of all terms and conditions of the Contract. The payment bond shall be for 100% of the Contract amount and guarantee, without limitation, the payment in full of all claims for labor, services, materials, supplies, and the like, for the Work as required by Civil Code §§ 9550 and 9554. All bonds shall be provided by an admitted surety insurer acceptable to the DISTRICT, in its absolute discretion. Personal sureties and unregistered sureties are unacceptable. A corporate surety authorized and admitted to transact business in California shall provide the bonds. The bonds shall be in the form set forth in these Contract Documents, and shall also contain all other requirements prescribed by Applicable Law. CONTRACTOR shall supply DISTRICT with documentation establishing the necessary requirements of the surety consistent with California law. To the extent, if any, the Contract amount is increased in accordance with the Contract Documents. CONTRACTOR shall cause the amount of the bonds to be increased accordingly and shall promptly deliver satisfactory evidence of such increase to DISTRICT. The bonds shall further provide no change or alteration of the Contract Documents (including, without limitation, an increase in the Contract amount, as referred to above), adjustment to any milestones and/or Contract time, or modifications of the time, terms, or conditions of payment to the CONTRACTOR will release or exonerate the sureties. If CONTRACTOR fails to furnish the required bonds, or fails to keep such bonds in full force and effect up through such times that such bonds are otherwise required to be in force and effect under the law, DISTRICT may terminate CONTRACTOR's right to proceed with the Work and/or terminate the Contract for cause.

00 72 00. 05 Protection of Work and Property

A. CONTRACTOR shall be responsible for all damages to persons or property which occur as a result of CONTRACTOR's fault or negligence in connection with the performance of this Contract. CONTRACTOR shall be responsible for the proper care and protection of all materials delivered and work performed until completion and final acceptance by DISTRICT. All CONTRACTOR responsibilities extend to the protection from vandalism and associated costs. With the exception of damage to the work caused by "acts of God," as defined in Public Contract Code Section 7105, CONTRACTOR assumes the risk for all work performed under this Contract. CONTRACTOR shall adequately protect adjacent property from settlement or loss of lateral support as provided by law and this Contract. CONTRACTOR shall take, and require all subcontractors to take, all necessary precautions for the safety of workers employed on the Project and shall comply with applicable safety laws and building codes to prevent accidents or injury to persons on, about, or adjacent to the premises where the work is being performed. In an emergency affecting safety of life, work, or adjoining property, the CONTRACTOR is permitted to act at its discretion, without special instruction or authorization from ARCHITECT/ENGINEER or DISTRICT, to prevent any threatened loss or injury; and CONTRACTOR shall act if authorized or instructed by ARCHITECT/ENGINEER or

DISTRICT. Any compensation claimed by CONTRACTOR on account of emergency work shall be determined by the Contract.

B. CONTRACTOR shall take all necessary measures and be responsible for the proper care and protection of all materials delivered and work performed until completion and final acceptance by the DISTRICT. CONTRACTOR shall provide heat, cooling, covering, security, and enclosures as necessary to protect all work, materials, equipment, appliances and tools against damage or loss.

C. CONTRACTOR shall take adequate precautions to protect existing sidewalks, curbs, pavements, landscaping, utilities, adjoining property, structures, and other improvements; and avoid damage to them and repair any damage caused by construction operations.

D. CONTRACTOR shall:

1. Enclose the work area with substantial barricade and arrange work to cause a minimum of inconvenience and danger to students and staff in their regular school activities.

2. Provide substantial barricades around any shrubs or trees to be preserved and ensure adequate irrigation for protection of existing plant material affected by the CONTRACTORS work.

3. Deliver materials to the building area over the route designated by ARCHITECT/ENGINEER or DISTRICT.

4. Take preventative measures to eliminate objectionable dust.

5. Confine apparatus, the storage of materials, and the operations of its workers within limits indicated by law, ordinances, permits, or directions of ARCHITECT/ENGINEER or DISTRICT and not unreasonably encumber the premises with materials; enforce all instruction of DISTRICT and ARCHITECT/ENGINEER regarding signs, advertising, fires, danger signals, barricades and smoking, and require that all persons employed on the Project comply with all regulations while on the construction site.

6. Exercise reasonable care to prevent disturbing or covering any survey markers, monuments, or other devices marking property boundaries or corners. If markers are disturbed, they shall be replaced by approved civil engineer at no cost to DISTRICT.

7. Not commence work earlier than local ordinances permit nor later than hours permitted.

8. Provide in writing after hours **Emergency Contact information (Attachment A)**, of company representative(s) to DISTRICT with Notice of Award submittals. In the event of inability to contact the CONTRACTOR within 30 minutes, DISTRICT is authorized to mitigate the emergency and withhold from contract associated costs.

00 72 00. 06 <u>Defense and Indemnification</u>

To the maximum extent permitted by Civil Code Section 2782 et seq., DISTRICT shall not be liable for, and CONTRACTOR shall defend and indemnify DISTRICT and its officers, agents, employees and volunteers (collectively 'DISTRICT PARTIES'), against, any and all claims, deductibles, self-insured retentions, demands, liability, judgments, awards, fines, mechanics' liens or other liens, labor disputes, losses, damages, expenses, charges or costs of any kind or character, including attorneys' fees and court costs (hereinafter collectively referred to as 'Claims'), which arise out of or are in any way connected to the Work covered by this Contract arising either directly or indirectly from any act, error, omission or negligence of CONTRACTOR or its officers, employees, agents, contractors, subcontractors, suppliers, licensees, or servants, including, without limitation, Claims caused by the concurrent negligent act, error or omission, of DISTRICT PARTIES. However, CONTRACTOR shall have no

obligation to defend or indemnify DISTRICT PARTIES against Claims caused by the active negligence, sole negligence or willful misconduct of DISTRICT PARTIES. This indemnification shall apply to all liability, as provided for above, regardless of whether any insurance policies are applicable, and insurance policy limits do not act as a limitation upon the amount of the indemnification to be provided by the CONTRACTOR. These obligations of CONTRACTOR shall continue to remain in full force and effect following termination and/or completion of the Contract and Work.

00 72 00. 07 Patents, Royalties, and Indemnification

The CONTRACTOR shall hold harmless, indemnify and defend the DISTRICT, its officers, agents, employees and members of its governing board, from any liability, cost, demand, judgment, and expense, including attorney fees and costs, arising out of or in any manner related to use of any patented or unpatented invention, process, infringement of patent rights action, section or appliance manufactured or used in the performance of this Contract, including its subsequent use by DISTRICT, unless otherwise specifically provided in the Contract documents and such liability arises from the sole negligence or willful misconduct of the DISTRICT. The CONTRACTOR shall pay all royalties and license fees. If the CONTRACTOR has reason to believe the required design, process, or product is an infringement of a patent, the CONTRACTOR shall be responsible for such loss unless such information is promptly furnished to the ARCHITECT/ENGINEER.

00 72 00. 08 Excise Taxes

If any transaction under this Contract constitutes a sale on which a federal excise tax is imposed under federal excise tax law and the sale is exempt from such excise tax because it is a sale to a state or local government for its exclusive use, upon request the DISTRICT will execute a certificate of exemption which will certify (1) that the DISTRICT is a political subdivision of the State for the purpose of such exemption and (2) that the sale is for the exclusive use of the DISTRICT. No excise tax for materials shall be included in any bid price.

00 72 00.09 Audit

Pursuant to and in accordance with the provisions of Government Code Section 8546.7, or any amendments thereto, all books, records and files of the DISTRICT, the CONTRACTOR, any subcontractor, or material or equipment supplier connected with the performance of this Contract involving the expenditure of public funds in excess of $10,000 including, but not limited to, the costs of administration of the Contract, shall be subject to, at the request of the DISTRICT, the examination and audit of the State Auditor or as part of any audit of the DISTRICT for a period of three (3) years after final payment is made under this Contract.

00 72 00. 10 Binding Effect

This Agreement shall inure to the benefit of and shall be binding upon the CONTRACTOR and DISTRICT and their respective successors, heirs and assigns.

00 72 00. 11 No Waiver

The failure of the DISTRICT in any one or more instances to insist upon strict performance of any of the terms and provisions of this Contract or to exercise any option herein conferred shall not be construed as a waiver of relinquishment, to any extent, of the right to assert or rely upon any such terms, provisions, or option on any future occasion.

00 72 00. 12 Severability

If any provision of this Contract shall be held invalid or unenforceable by a court of competent jurisdiction, such holding shall not invalidate or render unenforceable any other provision hereof.

00 72 00. 13 Notice and Service

A. Any notice from one party to the other under this Contract shall be in writing and shall be dated and signed by the party giving the notice or by a duly authorized representative of the party. Unless required otherwise by law, any notice shall not be effective for any purpose unless served in one of the following ways:

1. If notice is given to DISTRICT, it shall be given by personal delivery to ARCHITECT/ENGINEER or DISTRICT, or by depositing it in the United States mail, enclosed in a sealed envelope addressed to DISTRICT for attention of ARCHITECT/ENGINEER and sent by registered or certified mail with postage prepaid.

2. Unless required otherwise by law, if notice is given to CONTRACTOR, it shall be given by personal delivery to CONTRACTOR or to CONTRACTOR'S Superintendent at the project site, or by fax number / e-mail address provided on contract documents, or by depositing it in the United States mail, enclosed in a sealed envelope addressed to CONTRACTOR at CONTRACTOR'S regular place of business, or at any other address which may have been established for the conduct of work under this Contract and sent by registered or certified mail with postage prepaid.

3. If notice is given to the Surety or other person, it shall be given by personal delivery to the Surety or other person, or by depositing it in the United States mail, enclosed in a sealed envelope, addressed to the Surety or person at its address and sent by registered or certified mail with postage prepaid.

00 72 00.14 Time of Commencement and Completion

A. Commencement: The Contract Time will commence on the date specified in the Notice to Proceed. DISTRICT will issue the Notice to Proceed within sixty (60) days after the Notice of Award, unless otherwise stated in the Bid Documents. If, for any reason other than a pre-planned reason stated in the Bid Documents, DISTRICT does not issue the Notice to Proceed within this sixty (60) day period, the Contract will be terminated for convenience by DISTRICT, unless DISTRICT and CONTRACTOR mutually agree in writing to extend the period within which the Notice to Proceed may be issued.

B. Completion: The date of completion of the Project, or designated portion thereof, is the date certified by the ARCHITECT/ENGINEER when construction is complete in accordance with the Contract Documents.

00 72 00. 15 District's Right to Terminate or Suspend Contract

A. Termination For Cause: If CONTRACTOR refuses or fails to pursue or complete the Project, or any part thereof, with sufficient diligence to ensure its completion within the time specified, or any extension, or fails to complete the Project within the time required, or if CONTRACTOR should file a petition for relief as a debtor, or should relief be ordered against CONTRACTOR as a debtor under Title 11 of the United States Code, or if it should make a general assignment for the benefit of its creditors, or if a receiver should be appointed on account of its insolvency, or if CONTRACTOR should refuse or fail to supply enough properly skilled workers or proper materials to complete the work in the time specified, except in cases for which extension of time is provided, or if CONTRACTOR should fail to make prompt payment to subcontractors or suppliers for material, labor, services, or equipment, or disregard laws, ordinances, rules, codes, regulations, Applicable Law, or instructions of DISTRICT or requirements of any public entity having jurisdiction over the Work or if the CONTRACTOR disregards proper directives of the ARCHITECT/ENGINEER, the DISTRICT's Inspector/IOR or DISTRICT under the Contract Documents; OR if the CONTRACTOR performs Work which deviates from the Contract Documents and neglects or refuses to timely correct such Work, or if CONTRACTOR or its subcontractors should violate any of the provisions of this Contract, DISTRICT may serve written notice of its intention to terminate this Contract upon CONTRACTOR and its Surety, without prejudice to any other right or remedy. The notice shall contain the reasons for the intended termination. Unless the condition or violation ceases and arrangements satisfactory to DISTRICT for correction are made within

ten (10) days after the service of the notice, then DISTRICT may terminate the Contract and/or the CONTRACTOR's performance of the Contract, in whole or in part. Once such time period passes after notice is given and DISTRICT determines that sufficient cause exists to justify the action, DISTRICT may terminate the Contract without prejudice to any other right or remedy the DISTRICT may have, after giving the CONTRACTOR and the Surety at least seven (7) days advance written notice of the effective date of termination. DISTRICT shall have the sole discretion to permit the CONTRACTOR to remedy each or any cause for the termination without waiving the DISTRICT's right to terminate the Contract, or otherwise waiving, restricting or limiting any other right or remedy of DISTRICT under the Contract Documents, the performance bond, or at law. This Contract shall terminate on the effective date provided by DISTRICT in such notice of effective date of termination. In that case, CONTRACTOR shall not be entitled to receive any further payment until the Project is completed, and at such time only if CONTRACTOR is entitled to such payment. In the event of termination, DISTRICT shall immediately serve written notice of termination upon Surety and CONTRACTOR, and Surety shall have the right to take over and perform this Contract, provided, however, that if within seven (7) days after service upon Surety of the notice of termination, Surety does not give DISTRICT written notice of its intention to take over and perform this Contract and does not commence performance within 15 days after the effective date of termination, DISTRICT may take over and complete the work by contract or by any other method it deems advisable for the account and at the expense of CONTRACTOR, and DISTRICT may exclude CONTRACTOR from the site. CONTRACTOR and its surety shall be liable to DISTRICT for any excess cost or other damages incurred by DISTRICT. If DISTRICT takes over the work, as provided above, DISTRICT may take possession of the Work and take possession of and utilize, in completing the Project to the full extent they could be used by the CONTRACTOR, any tools, materials, appliances, construction equipment, machinery, materials, and plant other property belonging to the CONTRACTOR on the work site necessary for completion of the Project, without liability to CONTRACTOR.

B. Additional Rights of DISTRICT Upon Termination: In exercising DISTRICT's right to prosecute the completion of the Work, DISTRICT may also take possession of all materials and equipment stored at the site of the Work or for which the DISTRICT has paid CONTRACTOR but which are stored elsewhere, and finish the Work as the DISTRICT deems expedient. In exercising the DISTRICT's right to prosecute the completion of the Work, DISTRICT shall have the right to exercise its sole discretion as to the manner, methods, and reasonableness of the costs of completing the Work and DISTRICT shall not be required to obtain the lowest figure for completion of the Work. In the event that DISTRICT takes bids for remedial Work or completion of the Work, CONTRACTOR shall not be eligible for the award of such contract(s).

C. Completion by the Surety: In the event that the Contract or the CONTRACTOR's performance of the Contract is terminated pursuant to this Section, DISTRICT may demand that the Surety take over and complete the Work. DISTRICT may require that in so doing, the Surety not utilize CONTRACTOR in performing and completing the Work. Upon the failure or refusal of the Surety to take over and begin completion of the Work within fifteen (15) days after the effective date of termination, DISTRICT may take over the Work and prosecute it to completion as provided for above. Such remedy is in addition to, and not lieu of, other remedies available to DISTRICT as provided by law or in equity.

D. Assignment and Assumption of Subcontracts and Purchase Orders: DISTRICT shall, in its sole and exclusive discretion, have the option of requiring any Subcontractor or Material Supplier to perform in accordance with its Subcontract or Purchase Order with CONTRACTOR and assign the Subcontract or Purchase Order to DISTRICT or such other person or entity selected by DISTRICT to complete the Work.

E. Costs of Completion: In the event of termination under this Section, CONTRACTOR shall not be entitled to receive any further payment of the Contract Price, if any is due, until the Work is completed. If the unpaid balance of the Contract Price as of the date of termination exceeds DISTRICT's direct and indirect costs and expenses for completing the Work, including without limitation, attorneys' fees and compensation for additional professional and

consultant and administrative services, such excess shall be used to pay CONTRACTOR for the cost of the Work performed prior to the effective date of termination with a reasonable allowance for overhead and profit. If DISTRICT's costs and expenses to complete the Work, including but not limited to architectural, engineering, consultant, administrative, managerial, and/or legal services costs and expenses, exceed the unpaid Contract Price, CONTRACTOR and/or the Surety shall pay the difference to DISTRICT within ten (10) days of receipt of a written demand for such payment by DISTRICT to CONTRACTOR and Surety. Expense incurred by DISTRICT, as herein provided, and damage incurred through CONTRACTOR's default, shall be certified to DISTRICT by ARCHITECT.

F. CONTRACTOR Responsibility for Damages: CONTRACTOR and the Surety shall be liable for all damage sustained by DISTRICT resulting from, in any manner, the termination of Contract under this Section, including without limitation, attorneys' fees, and for all costs necessary for repair and completion of the Work over and beyond the Contract Price.

G. Conversion to Termination For Convenience: In the event the Contract is terminated under this Section, and it is finally determined by an arbitrator, court, jury or other tribunal having jurisdiction, for any reason, that CONTRACTOR was not in default under the provisions hereof or that DISTRICT's exercise of its rights under this Section was defective, deficient, ineffective, invalid or improper for any reason, the termination shall be deemed a Termination for Convenience of the DISTRICT and thereupon, the rights and obligations of DISTRICT and CONTRACTOR shall be determined in accordance with the Termination For Convenience Section hereof.

H. DISTRICT's Rights Cumulative: These provisions are in addition to and not a limitation on any other rights or remedies available to the DISTRICT. In the event the Contract is terminated pursuant to this Section, the termination shall not affect or limit any rights or remedies of the DISTRICT against CONTRACTOR or the Surety. The rights and remedies of DISTRICT under this Section are in addition to, and not in lieu of, any other rights and remedies provided by law or otherwise under the Contract Documents. Any retention or payment of monies to CONTRACTOR by DISTRICT shall not be deemed to release CONTRACTOR or its Surety from any liability hereunder.

I. Termination For Convenience: The DISTRICT may at any time, in its sole and exclusive discretion, by written notice to the CONTRACTOR, terminate the Contract in whole or in part when it is in the interest of, or for the convenience of, the DISTRICT. Upon receipt of written notice from the DISTRICT of such suspension for the DISTRICT's convenience, the CONTRACTOR shall:

1. Cease operations as directed by the DISTRICT in the notice; and

2. Take actions necessary, or that the DISTRICT may direct, for the protection and preservation of the Work.

In such case, the CONTRACTOR shall be entitled to payment for:

1. Work actually performed and in place as of the effective date of such termination for convenience, plus fifteen percent (15%) for profit and overhead on such Work,

2. Reasonable costs associated with demobilization that represent excess demobilization costs above what would have normally been expected if the contract had been completed, or as defined in the CONTRACTOR's Schedule of Values, plus fifteen percent (15%) for profit and overhead for such demobilization costs, and;

3. Reasonable termination expenses for protection of Work in place and suitable storage and protection of materials and equipment delivered to the site of the Work but not yet incorporated into the Work, provided that such payments exclusive of termination expenses shall not exceed the total Contract Price as reduced by payments previously made to the CONTRACTOR and as further reduced by the value of the Work as not yet completed. The CONTRACTOR shall not be entitled to profit and overhead on

Work which was not performed as of the effective date of the termination for convenience by the DISTRICT. The DISTRICT may, in its sole discretion, elect to have subcontracts assigned after exercising the right hereunder to terminate for the DISTRICT's convenience.

J. Suspension By The DISTRICT For Convenience: The DISTRICT may, without cause, order the CONTRACTOR in writing to suspend, delay, or interrupt the Work in whole or in part for such period of time as the DISTRICT may determine.

K. Adjustments: An adjustment shall be made for increases in the cost of performance of the Contract, including profit on the increased cost of performance caused by suspension, delay, or interruption. No adjustment shall be made to the extent:

1. that performance is, was or would have been so suspended, delayed, or interrupted by another cause for which the CONTRACTOR is responsible or if a suspension of the work is ordered by the DISTRICT due to the failure on the part of the CONTRACTOR to carry out orders or to perform any provisions of the Contract, the days on which the suspension order is in effect shall be considered working days, and shall not in any way modify or invalidate any of the provisions of this Contract, and the CONTRACTOR shall not be entitled to any damages or compensation on account of such suspension or delay; or
2. that an equitable adjustment is made or denied under another provision of this Contract.

L. Adjustments for Fixed Cost: Adjustments made in the cost of performance may have a mutually agreed fixed or percentage fee.

M. Termination Due To Discovery Of Unknown Or Changed Conditions: The DISTRICT reserves the right to terminate this Contract should the DISTRICT determine not to proceed because of the discovery of any unknown or changed condition described in the Contract Documents. The CONTRACTOR shall receive payment for all Work performed to the date of termination in accordance with the provisions of this Section.

N. Mutual Termination For Convenience: The CONTRACTOR and the DISTRICT may mutually agree in writing to terminate this Contract for convenience. The CONTRACTOR shall receive payment for all Work performed to the date of termination in accordance with the provisions of Termination For Convenience.

00 72 00. 16 Prohibited Interests/Conflict of Interest

CONTRACTOR is responsible for understanding and ensuring adherence to California Government Code section 1090 et seq., with respect to the Project. Pursuant to Government Code section 1090, no DISTRICT officers or employees shall be financially interested in any contract made by them in their official capacity, or by any body or board of which they are members. Nor shall DISTRICT officers or employees be purchasers at any sale or vendors at any purchase made by them in their official capacity. No official or employee of DISTRICT who is authorized in such capacity and on behalf of DISTRICT to negotiate, make, accept, or approve, or to take part in negotiating, making, accepting or approving, any architectural, engineering, inspection, construction or material supply contract or any subcontract in connection with construction of the Project, shall become, directly or indirectly, financially interested in the Project or in any part thereof.

An officer shall not be deemed to be interested in a contract entered into by the Board if the officer has only a "remote interest" in the contract (as "remote interest" is defined in Government Code section 1091(b)) and if the fact of that interest is disclosed to the Board and noted in its official records, and thereafter the Board authorizes, approves, or ratifies the contract in good faith by a vote of its membership sufficient for the purpose without counting the officer's vote with the remote interest per Government Code 1091.

By way of non-exclusive example relating to whether a financial interest is a "remote interest" or not:

1) If the date upon which CONTRACTOR first started doing business with a DISTRICT Officer/Board Member (i.e., the date CONTRACTOR first received goods or services supplied by the Board Member) was at least 5 years prior to Board Member's election or appointment, then the Board Member has a remote interest and CONTRACTOR is not prohibited from submitting a bid on this Project.

2) If the date upon which CONTRACTOR first started doing business with the Officer/Board Member (i.e., the date CONTRACTOR first received goods or services supplied by a Board Member) is less than five years before Board Member's election or appointment, then the Board Member has a prohibited conflict of interest and CONTRACTOR cannot bid on this project.

3) The provision of a bid/quote to CONTRACTOR over 5 years prior to Board Member's election or appointment, without the goods or services included in the bid actually being furnished to CONTRACTOR, i.e., an unaccepted bid/quote, does not qualify to cause a financial interest to be a "remote interest" as that term is defined in California Government Code section 1091(b)(8).

In accordance with Government Code section 1092, every contract made in violation of any of the provisions of Section 1090 may be avoided at the instance of any party except the Officer (Board Member) interested therein. No such contract may be avoided because of the interest of an Officer (Board Member) therein unless such contract is made in the official capacity of such Officer, or by the Board. In the event any such contract is avoided due to a violation of California Government Code section 1090, CONTRACTOR shall receive no compensation and shall repay DISTRICT any compensation received by CONTRACTOR hereunder. CONTRACTOR shall not aid, abet or knowingly participate in a violation of Government Code Section 1090, et seq.

00 72 00. 17 Architect/Engineer

A. The ARCHITECT/ENGINEER, as an agent of the DISTRICT, shall be DISTRICT's representative during the construction period and shall observe the progress and quality of the Work on behalf of DISTRICT. ARCHITECT/ENGINEER shall have authority to stop work whenever stoppage may be necessary, in ARCHITECT/ENGINEER'S reasonable opinion, to ensure the proper execution of this Contract.

B. Nothing contained in the Contract Documents shall create any contractual relationship between the ARCHITECT/ENGINEER and the CONTRACTOR.

C. ARCHITECT/ENGINEER as appearing in these specifications means the ARCHITECT/ENGINEER whose signature appears on the cover sheet of these specifications as having prepared the plans and specifications, if applicable, and as defined in the Definitions herein.

D. The ARCHITECT/ENGINEER will provide general Administration of the construction Contract, including the performance of the functions hereinafter described. The ARCHITECT/ENGINEER will perform their duties in accordance with all applicable provisions of law including, but not necessarily limited to, Title 24 of the California Code of Regulations. The ARCHITECT/ENGINEER will submit verified reports in accordance with all applicable provisions of law including, but not necessarily limited to, Title 24 of the California Code of Regulations.

E. The ARCHITECT/ENGINEER will be the DISTRICT's representative during construction until final payment. The ARCHITECT/ENGINEER will have authority to act on behalf of the DISTRICT to the extent provided in the Contract Documents, unless otherwise modified by written instrument which will be provided to the CONTRACTOR. The ARCHITECT/ENGINEER will advise and consult with the DISTRICT, and all of the DISTRICT's instructions to the CONTRACTOR shall be issued through the ARCHITECT/ENGINEER.

F. The ARCHITECT/ENGINEER shall at all times have access to the Work wherever it is in preparation and progress. The CONTRACTOR shall provide facilities for such access so the ARCHITECT/ENGINEER may perform their functions under the Contract Documents.

G. The ARCHITECT/ENGINEER will make periodic visits to the site to familiarize themselves generally with the progress and quality of the Work and to determine in general if the Work is proceeding in accordance with the Contract Documents. On the basis of their on-site observations as an ARCHITECT/ENGINEER, they will keep the DISTRICT informed of the Progress of the Work and will endeavor to protect the DISTRICT against defects and deficiencies in the Work of the CONTRACTOR. The ARCHITECT/ ENGINEER will not be required to make exhaustive or continuous on-site inspections to check the quality or quantity of the Work. The ARCHITECT/ENGINEER will not be responsible for construction means, methods, techniques, sequences, or procedures, or for safety precautions and programs in connection with the Work.

H. Based on such observations and the CONTRACTOR'S Application for Payment, the ARCHITECT/ENGINEER will determine and verify the amounts owing to the CONTRACTOR and will issue recommendations to the DISTRICT for payment as provided herein.

I. The ARCHITECT/ENGINEER will be, in the first instance, the interpreter of the requirements of the Contract Documents. The ARCHITECT/ENGINEER will, within a reasonable time, render such interpretations as necessary for the proper execution of progress of the Work.

J. The ARCHITECT/ENGINEER will have authority to reject Work which does not conform to the Contract Documents. Whenever, in their reasonable opinion, they consider it necessary or advisable to insure the proper implementation of the intent of the Contract Documents, they will have authority to require the CONTRACTOR to stop the work or any portion thereof, or to require special inspection or testing of the Work as provided herein whether or not such Work be then fabricated, installed or completed. However, neither the ARCHITECT/ENGINEER's authority to act under this direction, nor any decision made by them in good faith either to exercise or not to exercise such authority, shall give rise to any duty or responsibility of the ARCHITECT/ENGINEER to the CONTRACTOR, any Subcontractor, any of their agents of employees, or any other person performing any of the Work.

K. The ARCHITECT/ENGINEER will review Shop Drawings and samples as provided in the Contract Documents.

L. The ARCHITECT/ENGINEER will prepare change orders in accordance with the Contract Documents and will have authority to order minor changes in the Work. Change orders shall be signed by the DISTRICT, ARCHITECT/ENGINEER and CONTRACTOR and may subsequently be ratified by the governing board.

M. The ARCHITECT/ENGINEER will conduct inspections to determine the date of final completion, will receive written guarantees and related documents required by the Contract and assembled by the CONTRACTOR.

N. The ARCHITECT/ENGINEER will not be responsible for the acts or omissions of the CONTRACTOR, or any subcontractors, or any of his or their agents or employees, or any other persons performing any of the Work.

00 72 00. 18 <u>Communications</u>

A. The CONTRACTOR shall forward all communications to the DISTRICT through the ARCHITECT/ ENGINEER, if utilized with the exception of post completion warranty items.

B. The DISTRICT shall issue all instructions to the CONTRACTOR through the ARCHITECT/ENGINEER, if utilized with the exception of post completion warranty items.

00 72 00. 19 <u>Documents on Site</u>

CONTRACTOR shall keep a copy of all Contract Documents, including addenda, change orders, shop drawings, plans, schedules, specifications, copies of Titles 19 and 24 of the California Code of Regulations, and other

modifications on the job at all times. The documents shall be kept in good order and accurately marked promptly to record all changes made during construction. The documents shall be available to ARCHITECT/ENGINEER and its representatives at all times. CONTRACTOR shall be acquainted with and comply with all statutes and regulations as they relate to the project including, without limitation, the applicable provisions of Titles 8, 17 and 24 of the California Code of Regulations (See particularly the Duties of Inspector and Contractor, Title 24, California Code of Regulations, sections 4-342 and 4-343).

00 72 00. 20 <u>Mutual Responsibility of Contractors</u>

A. The CONTRACTOR shall afford other contractors reasonable opportunity for the introduction and storage of their materials and equipment and the execution of their work and shall properly connect and coordinate his Work with theirs.

B. If the CONTRACTOR'S Work depends for proper execution or results upon the work of any other separate contractor, the CONTRACTOR shall inspect and promptly report to the ARCHITECT/ENGINEER any discrepancies or defects in such other work that render it unsuitable for such proper execution and results. Failure of the CONTRACTOR to inspect and report shall constitute acceptance of the other contractor's work as fit and proper to receive his Work, and waiver by CONTRACTOR of any claim for additional time or monetary claim resulting from the same.

C. Should the CONTRACTOR cause damage to the work or property of any separate contractor on the Project, the CONTRACTOR shall, defend, indemnify and hold the DISTRICT harmless for any actual or alleged damages, costs, and expenses as a result thereof.

00 72 00. 21 <u>Integration of Work</u>

A. CONTRACTOR shall do all cutting, fitting, patching, and preparation of work as required to make its several parts come together properly, and fit it to receive or be received by work of other contractors or existing conditions showing upon, or reasonably implied by the drawings and specifications, and shall follow all directions given by the ARCHITECT/ENGINEER. Only tradespersons skilled and experienced in cutting and patching shall perform such work. CONTRACTOR shall not unreasonably withhold consent to the request of DISTRICT or separate contractor to cut, patch or otherwise alter the Work.

B. All costs caused by defective or ill-timed work shall be borne by the CONTRACTOR.

C. CONTRACTOR shall not endanger any work, or the fully or partially completed construction of the DISTRICT or separate contractor by cutting, excavating, or otherwise altering work and shall not cut or alter work of any DISTRICT or any other contractor without the written consent of the ARCHITECT/ENGINEER. CONTRACTOR shall be solely responsible for protecting existing work on adjacent properties and shall obtain all required permits for shoring and excavations near property lines.

D. When modifying existing work or installing new work adjacent to existing work, CONTRACTOR shall match, as closely as conditions of site and materials will allow, the finishes, textures, and colors of the original work, refinishing existing work as required, at no additional cost to DISTRICT.

E. CONTRACTOR is aware that the project may be split into several phases. If the Project is split into phases, then CONTRACTOR has made allowances for any delays or damages which may arise from coordination with contractors for other phases. If any delays should arise from a contractor working on a different phase, CONTRACTOR's sole remedy for damages, including delay damages, shall be against the contractor who caused such damage and not the DISTRICT. CONTRACTOR shall provide access to contractors for other phases as necessary to prevent delays and damages to contractors working on other phases of construction.

00 72 00. 22 Soils Investigation Report

When a soils investigation report obtained from test holes at work site is available, the report shall not be a part of this Contract but will be made available. Any information obtained from the report or any information given on drawings as to subsurface soil conditions or to elevations of existing grades or elevations of underlying rock is approximate only, is not guaranteed, and does not form a part of this Contract. DISTRICT does not assume any responsibility whatsoever with respect to the sufficiency or accuracy of any borings made, or of any logs of the test borings, or of other investigations, or of any soils reports furnished, or of the interpretations to be made from such information. There is no warranty or guarantee, either express or implied that the conditions indicated by such investigations, borings, logs, soil reports or other information are representative of those existing throughout the site of the Project, or any part thereof, or that unforeseen developments may not occur. At the DISTRICT's request, the CONTRACTOR shall make available to the DISTRICT the results of any Site investigation, test borings, analyses, studies or other tests conducted by or in the possession of the CONTRACTOR of any of its agents. CONTRACTOR is required to make a visual examination of the site and must make whatever tests it deems appropriate to determine the underground condition of the soil. CONTRACTOR agrees that it will make no claim against DISTRICT for damages in the event that, during progress of the Work, CONTRACTOR encounters subsurface or latent conditions at the site materially different from those shown on drawings or indicated in specifications, or for unknown conditions of an unusual nature which differ materially from those ordinarily encountered in work of the type provided for in the plans and specifications.

00 72 00. 23 Utilities: Removal and Restoration

A. The CONTRACTOR agrees and is required to coordinate and fully cooperate with the DISTRICT and utility owners for the location, relocation, and protection of utilities. The CONTRACTOR's attention is directed to the existence of utilities, underground and overhead, necessary for normal house and commercial service for all buildings along the line of work. The CONTRACTOR shall make arrangements with utility owners for the location of house and commercial services lines in advance of the actual construction and for the relocation of such facilities, if necessary, by the utility owner or the CONTRACTOR.

B. Pursuant to Government Code section 4215, DISTRICT assumes the responsibility for removal, relocation and protection of utilities located on the construction site at the time of commencement of construction under this Contract with respect to any utility facilities which are not identified in the plans and specifications. CONTRACTOR shall notify the DISTRICT a minimum of forty-eight (48) hours (two District business days) in advance of all trenching and earthwork. CONTRACTOR shall notify and receive clearance from any cooperative agency, including but not limited to Underground Service Alert ("USA"), in accordance with Government Code section 4216, et seq., and marking all proposed excavation/trenches in white paint prior to submitting DISTRICT form titled, **Notice of Start/Request for Location of District Utilities (Attachment B)**. CONTRACTOR shall promptly provide a copy of all such notifications to the DISTRICT. CONTRACTOR shall review DISTRICT as-built drawings. CONTRACTOR shall not be assessed liquidated damages for delay in completion of the project, when such delay was caused by the failure of the DISTRICT or the owner of the utility to provide for removal or relocation of such utility facilities DISTRICT shall compensate CONTRACTOR for the costs of locating, repairing damage not due to the failure of CONTRACTOR to exercise reasonable care, and removing or relocating utility facilities not indicated in the plans and specifications with reasonable accuracy, and for equipment on the project necessarily idled during such work. Repair and or compensation for repair of marked utilities is the responsibility of the party responsible for said damage. The DISTRICT retains the right to either self-perform repairs or require the CONTRACTOR to complete repairs. If CONTRACTOR is at fault, applicable payment for the repair will be deducted from payment of the contract. Nothing herein shall be construed to preclude assessment against the CONTRACTOR for any other delays in completion of the Work. Nothing herein shall be deemed to require the DISTRICT to indicate the presence of existing service laterals or appurtenances whenever the presence of such utilities on the Site can be inferred from the presence of other visible facilities, such as buildings, or meter junction boxes on or adjacent to the Site; provided,

however, nothing herein shall relieve the DISTRICT from identifying main or trunk lines in the plans and specifications.

C. If while performing work under this Contract, CONTRACTOR discovers utility facilities not identified by DISTRICT in the Contract plans or specifications, CONTRACTOR shall immediately notify in writing the DISTRICT and the utility. CONTRACTOR may not rely upon and must question in writing to the DISTRICT and the ARCHITECT/ENGINEER any information which appears incorrect based upon CONTRACTOR's Site inspection, knowledge of the Project, and prior experience with similar projects), unless specifically stated in writing that the CONTRACTOR may rely upon the designated information.

D. No time extensions will be granted for utility work that, in DISTRICT's opinion, can proceed concurrently with the Work of this Contract.

E. It is understood and agreed that the failure of the CONTRACTOR or its subcontractor to comply fully with these provisions or California Government Code section 4215, et seq., constitutes failure of the CONTRACTOR to exercise reasonable care and precludes CONTRACTOR's recovery from DISTRICT for any related costs or damages.

00 72 00. 24 Use or Existence of Asbestos Materials/Products, PCB's, Mercury Waste, Lead Based Paint, Petroleum, and/or Other Hazardous Materials

A. Contractor's Certification of Non-Use of Asbestos or Asbestos Containing Products or Materials: CONTRACTOR shall not use any asbestos or asbestos containing products or materials in performing the Work under this Contract. Upon completion of the Project, CONTRACTOR shall certify in writing to DISTRICT that no asbestos or asbestos containing materials or products were used by CONTRACTOR or any subcontractor in performing the work required by this Contract.

B. Responsibility: DISTRICT shall be responsible for any asbestos, polychlorinated biphenyl's (PCB's), mercury waste, lead based paint and petroleum discovered, uncovered and/or otherwise revealed at the Project site which were not identified, described, shown or indicated in the Bidding Documents to be within the scope of the Work. DISTRICT is not responsible for any such materials brought to the Project site by CONTRACTOR, any Subcontractor, material supplier or anyone else CONTRACTOR is directly or indirectly responsible for.

C. Asbestos, PCB's, Mercury Waste, Lead Based Paint, Petroleum, and/or Other Hazardous Materials: If, during construction of the Work in areas where CONTRACTOR is required to perform Work, CONTRACTOR discovers, uncovers and/or otherwise reveals a material reasonably believed to be asbestos, PCB's, mercury waste, lead based paint, petroleum, and/or other hazardous materials which were not identified, described, shown or indicated in the Bidding Documents to be within the scope of the Work, CONTRACTOR shall immediately stop Work in the affected area and provide written notice to ARCHITECT, advising of the circumstances of such discovery, Work stoppage and whether or not such material was generated by CONTRACTOR or DISTRICT. DISTRICT shall retain an independent testing laboratory to determine the nature of the material encountered and whether corrective measures or remedial action is required. If test results indicate and/or otherwise confirm the material as asbestos, PCB's, mercury waste, lead based paint, petroleum, and/or other hazardous materials requiring treatment and/or removal, ARCHITECT may issue an order suspending the work, and DISTRICT may elect to have such remediation work performed by others under separate contract. Alternatively, ARCHITECT may issue a Construction Directive for the legal treatment and/or removal and disposal thereof. If CONTRACTOR believes a Construction Directive establishes a basis for an adjustment in the Contract Amount and/or Contract Time, CONTRACTOR shall, submit a Change Order Proposal within ten (10) days of the date of issuance of the Construction Directive. After treatment and/or removal, the independent testing laboratory shall test and certify the asbestos, PCB's, mercury waste, lead based paint, petroleum, and/or other hazardous materials have been removed and/or controlled to within legal limits and

requirements. Upon receipt of such test results, ARCHITECT will provide notice to CONTRACTOR to proceed with construction in affected Work areas.

D. Indemnification By DISTRICT: In the event the presence of the materials as set forth in this Section are not caused by CONTRACTOR or some person or entity directly or indirectly performing under CONTRACTOR or its Subcontractors, DISTRICT shall pay for all costs of testing and remediation, if any. In addition, DISTRICT shall defend, indemnify and hold harmless CONTRACTOR and its agents, officers, directors and employees from and against any and all claims, damages, losses, costs and expenses incurred in connection with or arising out of, or relating to, the performance of the Work in the area affected by such materials.

E. Indemnification By CONTRACTOR: In the event the presence of the materials as set forth in this Section are caused by CONTRACTOR, Subcontractors, suppliers, or anyone else who would otherwise be a "claimant" under Civil Code § 9100, CONTRACTOR shall pay for all costs of testing and remediation, if any, and shall indemnify and hold DISTRICT harmless from and against such costs even if CONTRACTOR itself is without fault. In addition, CONTRACTOR shall defend, indemnify and hold harmless DISTRICT, ARCHITECT, and their consultants, and its and/or their respective agents, officers, representatives, consultants, and employees from and against any and all claims, actions, damages, losses, costs, penalties and expenses incurred in connection with, arising out of, or relating to, the presence of such materials even if CONTRACTOR itself is without fault. The DISTRICT shall have the right to assess any and all costs or damages against the Contract funds, the CONTRACTOR, and/or the performance bond.

00 72 00.25 Assignment of Antitrust Actions

A. CONTRACTOR agrees to be bound by and comply with the provisions of Public Contract Code Section 7103.5 which provides:

1. In entering into a public works contract or a subcontract to supply goods, services, or materials pursuant to a public works contract, the contractor or subcontractor offers and agrees to assign to the awarding body (DISTRICT) all rights, title, and interest in and to all causes of action it may have under Section 4 of the Clayton Act (15 U.S.C., Section 15) or under the Cartwright Act (Chapter 2 commencing with Section 16700 of Part 2 of Division 7 of the Business and Professions Code), arising from purchases of goods, services, or materials pursuant to the public works contract or the subcontract. This assignment shall be made and become effective at the time the awarding body tenders' final payment to the contractor, without further acknowledgment by the parties.

2. CONTRACTOR, for itself and all subcontractors, agrees to assign to DISTRICT all rights, title and interest in and to all such causes of action CONTRACTOR and all subcontractors may have under the Contract. This assignment shall become effective at the time DISTRICT tenders' final payment to the CONTRACTOR and CONTRACTOR shall require assignments from all subcontractors in order to comply therewith.

00 72 00. 26 Separate Contracts/District Forces/Other Contractors

A. DISTRICT reserves the right to perform construction or operations related to the Project with the DISTRICT's own forces or to award separate contracts in connection with other portions of the Project or other construction or operations at or about the Site. If the CONTRACTOR claims that delay or additional cost is involved because of such action by the DISTRICT, the CONTRACTOR shall seek an adjustment to the Contract Price or the Contract Time as provided for in the Contract Documents. Failure of the CONTRACTOR to request such an adjustment of the Contract Time or the Contract Price in strict conformity with the provisions of the Contract Documents applicable thereto shall be deemed a waiver of the same. CONTRACTOR shall afford other contractors reasonable opportunity for introduction and storage of their materials and execution of their work and shall coordinate its work with those other contractors.

B. If any part of CONTRACTOR'S work depends upon work of any other contractor for proper execution or results, CONTRACTOR shall inspect and promptly report in writing to ARCHITECT/ENGINEER any defects in the work that renders it unsuitable for proper execution or results. CONTRACTOR will be held accountable for damages to DISTRICT for that work that it failed to inspect or should have inspected. CONTRACTOR'S failure to inspect and report in writing shall constitute its acceptance of any other contractor's work as fit and proper for reception of its work, except as to defects which may develop in another contractor's work after execution of its work. DISTRICT shall provide for coordination of the activities of the DISTRICT's own forces and of each separate contractor with the Work of the CONTRACTOR, who shall cooperate with them. The CONTRACTOR shall participate with other separate contractors and the DISTRICT in reviewing their respective construction schedules when directed to do so. The CONTRACTOR shall make any revisions to the approved construction schedule for the Work hereunder deemed necessary after a joint review and mutual agreement. The construction schedules shall then constitute the construction schedules to be used by the CONTRACTOR, separate contractors and the DISTRICT until subsequently revised.

C. To ensure proper execution of CONTRACTOR'S subsequent work, CONTRACTOR shall measure and inspect work already in place and shall report in writing to the ARCHITECT/ENGINEER any discrepancy between executed work and this Contract. The CONTRACTOR shall afford the DISTRICT and any separate CONSTRACTORS reasonable opportunity for storage of their materials and equipment and performance of their activities at the Site and shall connect and coordinate the CONTRACTOR's Work, construction and operations with theirs as required by the Contract Documents.

D. CONTRACTOR shall ascertain to CONTRACTOR's satisfaction the scope of the project and nature of any other contracts that have been or may be awarded by DISTRICT in connection with the Project, in order that CONTRACTOR may perform this Contract in the light of any other contracts. Nothing contained in this Contract shall be interpreted as granting to CONTRACTOR exclusive occupancy of the project site. CONTRACTOR shall not cause any unnecessary hindrance or delay to any other contractor working on the project. If simultaneous execution of any contract for the Project is likely to cause interference with performance of some other contract or contracts, DISTRICT shall decide which contractor shall cease work temporarily and which contractor shall continue or whether work can be coordinated so that the contractors may proceed simultaneously. DISTRICT shall not be responsible for any damage suffered or extra costs incurred by CONTRACTOR resulting directly or indirectly from the award of performance or attempted performance of any other contract or contracts on the project, or caused by any decision or omission of DISTRICT regarding the order in performing the contracts.

00 72 00. 27 Nondiscrimination

In performing this Contract, CONTRACTOR and its subcontractors shall not unlawfully discriminate in the employment of persons on the project because of race, religious creed, color, national origin, ancestry, physical handicap, medical condition, marital status and sex.

00 72 00. 28 Subcontracting

A. CONTRACTOR agrees to bind every subcontractor by the terms and conditions of this Contract as far as the terms are applicable to the subcontractor's work. If CONTRACTOR subcontracts any part of this Contract, CONTRACTOR shall be responsible to DISTRICT for any acts and/or omissions of its subcontractors, suppliers, and of persons either directly or indirectly employed by its subcontractors or suppliers. Nothing contained in this Contract shall create any contractual relationship between any subcontractor/supplier and DISTRICT.

B. DISTRICT's consent to or approval of any subcontractor or supplier under this Contract shall not in any way relieve CONTRACTOR of its obligations under this Contract, and no such consent or approval shall be deemed to waive any provision of this Contract.

C. The substitution of subcontractors shall be permitted only as authorized by Public Contract Code Section 4100 et seq. In the event CONTRACTOR substitutes any subcontractor for a listed subcontractor pursuant to such statutory framework, the new subcontractor shall stand in place and stead of the originally listed subcontractor, and any further request for substitution of the new subcontractor shall only be permitted if it would have been authorized by Public Contract Code Section 4100 et seq. where the subcontractor to be replaced was an originally listed subcontractor. Any subsequent substitution requests must also meet such standards, just as if the subcontractor to be replaced was an originally listed subcontractor.

D. All subcontractors shall be appropriately licensed to perform the work for which employed in conformity with the laws of the State of California.

00 72 00. 29 <u>Status of Contractor</u>

A CONTRACTOR is and shall at all times be deemed to be an independent contractor and shall be wholly responsible for the manner in which it performs the services required of it by the terms of the Contract Documents. Nothing contained herein shall be construed as creating the relationship of employer and employee, or principal and agent, between the DISTRICT and CONTRACTOR or any of CONTRACTOR's agents or employees. CONTRACTOR assumes exclusively the responsibility for the acts of its employees as they relate to the services to be provided during the course and scope of their employment. CONTRACTOR, its agents and employees, shall not be entitled to any rights or privileges of DISTRICT employees and shall not be considered, in any manner, to be DISTRICT employees. DISTRICT shall be permitted to monitor the activities of CONTRACTOR to determine compliance with the terms of the Contract Documents.

B. CONTRACTORS are required, by law, to be licensed and regulated by the Contractor's State License Board. Any contractor not so licensed is subject to certain penalties and citations under the law and, if such be the case, the Contract will be considered void and pursuant to Business and Professions Code Section 7028.7.

C. DISTRICT is to at all times have current, CONTRACTOR contact information. If at any time necessary contact cannot be made to CONTRACTOR, the DISTRICT will take whatever measures necessary and CONTRACTOR will be responsible for any costs incurred.

00 72 00. 30 <u>Workers</u>

A. At all times, CONTRACTOR shall enforce strict discipline and good order among its employees and shall ensure that its subcontractors enforce strict discipline and good order among their employees. If any person employed by, or an agent of, CONTRACTOR shall fail or refuse to carry out the directions of DISTRICT, or if any person employed by, or an agent of, any subcontractor or supplier shall fail or refuse to carry out the directions of the CONTRACTOR; or, in the opinion of the DISTRICT, any person working on the Site or the Work is incompetent, unfit, lacks diligence, is not skilled in the work assigned, consumes or possesses alcoholic beverages, illegal drugs, or tobacco products on the Site, or is disorderly; uses threatening or abusive language to any person representing the DISTRICT on the Work; or is otherwise unsatisfactory, upon DISTRICT's request to CONTRACTOR, he or she shall be dismissed and removed from the Work immediately, and shall not again be employed on the Work except with the written consent of DISTRICT.

B. CONTRACTOR shall provide a competent superintendent and assistants as necessary, all of whom shall be reasonably proficient in speaking, reading and writing English and, who shall be in attendance at the Project site during performance of the Work, attend Project meetings and have prior successful experience in similar projects. The superintendent shall represent CONTRACTOR in the CONTRACTOR's absence, shall have complete authority to represent and act for CONTRACTOR, and communications given to the superintendent shall be as binding as if given to CONTRACTOR. Whenever the Superintendent or his/her assistants are not on site, DISTRICT may stop the work until they arrive.

C. CONTRACTOR and each subcontractor shall: furnish a competent and adequate staff as necessary for the proper administration, coordination, supervision, and superintendence of their portion of the Work; organize the procurement of all materials and equipment so that the materials and equipment will be available at the time they are needed for the Work; and keep an adequate force of skilled workers on the job to complete the Work in accordance with all requirements of the Contract Documents.

00 73 16 Insurance Requirements

A. Contractor Insurance Requirements: During the term of this Contract, CONTRACTOR shall secure and maintain public comprehensive general liability, workers' compensation, auto liability, Builders Risk and property damage insurance in amounts provided in the Information to Bidders, Instruction for Insurance article, to protect CONTRACTOR, the DISTRICT and its officers, agents, employees and governing board members from all claims for personal injury, including accidental death, as well as from all claims for property damage arising out of CONTRACTOR's performance of this Contract.

B. Subcontractor Requirements: CONTRACTOR shall require that any subcontractors secure and maintain similar public comprehensive general liability, workers' compensation, auto liability, Builders Risk and property damage insurance in appropriate amounts.

C. Property Insurance: CONTRACTOR shall purchase and maintain and cause to be maintained property insurance on all work subject to loss or damage by fire. The amount of property insurance shall be sufficient to protect against loss or damage in full until the Project is accepted by DISTRICT. CONTRACTOR and its subcontractors waive all rights against each other and against all other subcontractors, vendors and DISTRICT for loss or damage to the extent reimbursed by Builder's Risk or any other property or equipment insurance applicable to the Project, except such rights as they may have to the proceeds of such insurance. If the policies of insurance referred to in this bid require an endorsement of consent of the insurance company to provide continued coverage where there is a waiver of subrogation, the owners of such policies shall cause them to be so endorsed or obtain such consent.

D. Worker's Compensation Insurance: During the term of this Contract, CONTRACTOR shall provide workers' compensation insurance for all of CONTARCTOR'S employees engaged in work under this Contract on or at the site of the Project and in case any of CONTRACTOR'S work is sublet, CONTRACTOR shall require the subcontractor to provide workers' compensation insurance for all of subcontractor's employees. Any class of employee or employees not covered by a subcontractor's insurance shall be covered by the CONTRACTOR'S insurance. In case any class of employees engaged in work under this Contract on or at the site of the Project is not protected under the Workers' Compensation laws, CONTRACTOR shall provide or cause a subcontractor to provide adequate insurance coverage for the protection of those employees not otherwise protected. CONTRACTOR shall file with the DISTRICT a certificate of workers' compensation coverage pursuant to the Information to Bidders, Instruction for Insurance article, and in compliance with California Labor Code Section 3700. If CONTRACTOR fails to maintain such insurance, DISTRICT may take out compensation insurance which DISTRICT might be liable to pay under the provisions of the Act by reason of an employee of the CONTRACTOR being injured or killed, and deduct and retain the amount of the premium for such insurance from any sums due CONTRACTOR.

E. CONTRACTOR shall not commence work or allow any subcontractor to commence work under this Contract until CONTRACTOR has obtained all required insurance and certificates which shall be delivered to and approved by DISTRICT in accordance with Information to Bidders, Instruction for Insurance article.

F. CONTRACTOR shall not commence Work on the Project site before the effective date of the insurance and bonds CONTRACTOR is required to obtain by the Contract Documents. The established date of commencement of the Contract Time will not be changed by the date of such insurance and/or bonds.

00 73 19 Student Safety Allowance (Fingerprinting)

A. Requirements for Contact with Students: Contractor shall comply with Education Code section 45125.2 and this Article. If Contractor's employee(s), agent(s) or subcontractor(s) will have more than limited contact with students, then Contractor must take one or more of the following steps:

1. Install a physical barrier at the worksite to limit contact with pupils.

2. Have an employee, who the Department of Justice has ascertained has not been convicted of a violent or serious felony, continually monitor and supervise employees.

3. Arrange for surveillance by personnel with DISTRICT approval.

B. Emergency or Exceptional Situation: If CONTRACTOR is providing the services in an emergency or exceptional situation, CONTRACTOR is not required to comply with Education Code section 45125.2. An "emergency or exceptional" situation is one in which pupil health or safety is endangered or when repairs are needed to make a facility safe and habitable. DISTRICT shall determine whether an emergency or exceptional situation exists.

C. DISTRICT Processing to Department of Justice: If Contractor is required to receive verification for an employee, agent or subcontractor from the Department of Justice pursuant to this Article or the Education Code, **Contractor will have individual(s) processing submitted through the DISTRICT** to the Department of Justice using the DISTRICT's fingerprinting hardware and materials. The DISTRICT will charge for such assistance at its standard rates charged to its own employees. **Department of Justice clearance processed through any other agency will not be accepted by the DISTRICT**. Refer to Attachment "C" for instructions for obtaining fingerprinting clearance through the DISTRICT.

D. Verification of Compliance Under Penalty of Perjury: Contractor shall certify under penalty of perjury, on a form provided by the DISTRICT, compliance with this Article prior to performing any work in which any employee, agent or subcontractor will have more than limited contact with students.

E. Indemnification and Hold Harmless Agreement: It shall be Contractor's sole responsibility to ensure compliance with Education Code sections 45125.1 and 45125.2 and this Article. In addition to and without limiting any other indemnity promise made in this contract, Contractor agrees to defend, indemnify and hold harmless the DISTRICT for and from any and all actual or potential claims of any kind or description seeking to hold the DISTRICT, its employees or its agents responsible for violation of Education Code sections 45125.1 or 45125.2, or any other violation arising out of duties imposed by Education Code sections 45125.1 or 45125.2, arising out of Contractor's employee's, agent's or subcontractor's contact with students. Contractor's indemnification obligation shall include, without limitation, judgments, settlements, contributions, payments, fines and penalties, as well as the costs of investigating and complying with equitable decrees or governmental directives. The defense obligation shall include, without limitation, legal fees, litigation expenses, and investigative costs.

F. Definitions:

1. A "violent felony" is any felony listed in subdivision (c) of section 667.5 of the Penal Code.

2. A "serious felony" is any felony listed in subdivision (c) of section 1192.7 of the Penal Code.

3. An "emergency or exceptional situation" is, as determined by the DISTRICT in its sole discretion, a situation in which pupil health or safety is endangered or when repairs are needed to make a school facility safe and habitable.

00 73 43 Wage Rates

A. The project is a public works Project, as defined in Labor Code section 1720, and must be performed in accordance with the requirements of Labor Code sections 1720 to 1815 and Title 8 CCR sections 16000 to 17270, which govern the payment of prevailing wage rates on public works projects.

B. Notice is hereby given pursuant to the provisions of Section 1770 et seq of the California Labor Code, Director of the Department of Industrial Relations determined the general prevailing rate of per diem wages, including those for holiday and overtime work, in the locality in which this work is to be performed for each craft or type of workman or mechanic needed to execute the contract which will be awarded to the successful bidder, and the prevailing rates are as set forth in the web address www.dir.ca.gov/Dirdatabases.html and are incorporated herein by reference. DIR Wage Determinations are kept on file at District Purchasing Department, 4498 N. Brawley Ave., Fresno CA. 93722.

C. When permitted by law, holiday and overtime work shall be paid at a rate of at least one and one-half times the specified rate of per diem wages, unless otherwise specified.

D. Each worker of the CONTRACTOR and any of its subcontractors engaged in work on the Project shall be paid not less than the prevailing wage rate, regardless of any contractual relationship which may be alleged to exist between the CONTRACTOR or any subcontractor and such workers.

E. Each worker needed to execute the Work on the Project shall be paid travel and subsistence payments, as defined in the applicable collective bargaining agreements filed with the Department of Industrial Relations, in accordance with Labor Code Section 1773.1.

F. CONTRACTOR shall post at appropriate and conspicuous location(s) on the Project Site a schedule showing all applicable prevailing wage rates in accordance with Labor Code section 1773.2.

G. As a penalty, the CONTRACTOR and any violating subcontractor under the CONTRACTOR, shall forfeit not more than ($200) two-hundred dollars for each calendar day, or any portion thereof, any worker is paid less than the established prevailing wage rates for the work or craft in which the worker is employed by CONTRACTOR or any subcontractor on the project. The difference between the established prevailing wage rates and the amount paid to each worker for each whole or partial calendar day for which each worker was paid less than the established prevailing wage rates, shall be paid to each worker by the CONTRACTOR or subcontractor, in accordance with Labor Code Section 1775, and CONTRACTOR and its subcontractors shall comply with Labor Code 1775 in all respects.

H. The subcontracts executed between CONTRACTOR and its subcontractors for the performance of the Work shall include a copy of the provisions of Labor Code Sections 1771, 1775, 1776, 1777.5, 1813, and 1815.

I. Any worker employed to perform work on the Project which is not covered by any classification available in the DISTRICT office, shall be paid not less than the minimum rate of wages specified for the classification which most nearly corresponds with work to be performed by him and that minimum wage rate shall be retroactive to the time of initial employment of the person in the classification.

J. Pursuant to Labor Code Sections 1773.1, per diem wages are deemed to include employer payments for health and welfare, pension, vacation, travel time and subsistence pay.

K. CONTRACTOR and each subcontractor shall keep or cause to be kept accurate payroll records showing the name, address, social security number, work classification, straight time and overtime hours worked each day and week and the actual per diem wages paid to each journeyman, apprentice, worker, or other employee employed by CONTRACTOR and/or each subcontractor in connection with the project. All payroll records shall be made available for inspection as provided by Labor Code Section 1776. The contractor or subcontractor has 10 days in which to comply subsequent to receipt of a written notice requesting the records. As a penalty, the CONTRACTOR shall forfeit one hundred dollars ($100) for each calendar day, or portion thereof, for each worker, until strict compliance is effectuated. These penalties shall be withheld from progress payments then due. Failure to timely submit payroll records may result in debarment by the Labor Commissioner. Be aware, California Labor Code Section 1771.5 requires contract payments to be withheld when payroll records are delinquent or inadequate. It is the responsibility of CONTRACTOR to comply with all the provisions of Labor Code Section 1776.

L. The project is subject to compliance monitoring and enforcement by the DIR pursuant to and will require prime contractors and subcontractors to upload **ALL payroll records on the DIR website: http://www.dir.ca.gov/Public-Works/PublicWorks.html.** Any additional requirements that materialize from this legislation must be complied with by all contractors to preserve the District's ability to apply for available State bond funding on the project in the future.

00 73 44 Apprentices

A. The CONTRACTOR acknowledges and agrees that, it this Contract involves a dollar amount greater than or a number of working days greater than that specified in Labor Code Section 1777.5, this Contract is governed by the provisions of Labor Code Section 1777.5. It shall be the responsibility of the CONTRACTOR to ensure compliance with this Section and with the provisions of Labor Code Section 1777.5 for all apprenticing occupations.

B. Apprentices of any crafts or trades may be employed and, when required by Labor Code Section 1777.5, shall be employed provided they are properly registered in full compliance with the provisions of the Labor Code.

C. Every such apprentice shall be paid the standard wage paid to apprentices under the regulations of the craft or trade at which he or she is employed, and shall be employed only at the work or the craft or trade to which he or she is registered.

D. Only apprentices, as defined in Labor Code Section 3077, who are in training under apprenticeship standards and written apprentice agreements under Chapter 4 commencing with Section 3070 of the Labor Code are eligible to be employed on public works. The employment and training of each apprentice shall be in accordance with the provisions of the apprenticeship standards and apprentice agreements under which he or she is training.

E. Pursuant to Labor Code Section 1777.5, the CONTRACTOR and any subcontractors employing workers in any apprenticeship craft or trade, in performing any work under this Contract, shall apply to the applicable joint apprenticeship committee for a certificate approving CONTRACTOR or subcontractor under the applicable apprenticeship standards for the employment and training of apprentices.

F. Every contractor and subcontractor shall submit contract award information to the applicable joint apprenticeship committee which shall include an estimate of journeyman hours to be performed under the Contract, the number of apprentices to be employed and the approximate dates the apprentices will be employed.

G. The CONTRACTOR and all subcontractors shall comply with Labor Code Section 1777.6, which forbids certain discriminatory practices in the employment of apprentices.

H. CONTRACTOR shall become fully acquainted with the laws concerning apprentices prior to commencement of the Project. Special attention is directed to sections 1777.5, 1777.6 and 1777.7 of the Labor Code and Title 8 of the

California Code of Regulations. Questions may be directed to the State Division of Apprenticeship Standards, 455 Golden Gate Avenue, San Francisco, California.

00 73 45 Hours of Work

A. As provided in the Wage Rates Section commencing with Section 1810 Labor Code, eight hours of labor shall constitute a legal day of work. The standard time of service of any worker employed at any time by the CONTRACTOR, or by any subcontractor on any subcontract under this Contract, upon the Project or upon any part of the Project contemplated by this Contract, shall not exceed eight hours per day and forty hours during any one week unless all overtime and off time laws are complied with in full. Upon completion of all hours worked in excess of eight hours per day and forty hours during any one week, work shall be permitted upon the project at not less than one and one-half times the basic rate of pay. All work performed on Saturday, Sunday, and/or holiday shall be paid pursuant to the Prevailing Wage Determination.

B. The CONTRACTOR shall keep and shall cause each subcontractor to keep accurate records showing the name of and actual hours worked each calendar day and each calendar week by each worker employed by CONTRACTOR in connection with the Project or any part of the Project. The record shall be kept open at all reasonable hours to the inspection of the DISTRICT and to the Division of Labor Standards Enforcement, Department of Industrial Relations, State of California.

C. As a penalty, the CONTRACTOR shall pay $25.00 for each worker employed by CONTRACTOR or by any subcontractor in the performance of this Contract for each calendar day during which the worker is required or permitted to work more than eight hours in any calendar day and 40 hours in any one calendar week in violation of the provisions of the Wage Rates Section commencing with Section 1810 of the Labor Code. Any work performed after regular working hours or on Sundays or other holidays shall be performed without additional expense to DISTRICT.

00 91 13 Addenda

Reserved

00 94 00 Record Modifications

Reserved

DIV 01 - GENERAL REQUIREMENTS

01 14 00 WORK RESTRICTIONS

01 14 13. 01 Access to Work

DISTRICT and its representatives shall at all times have access to the work of the Project. CONTRACTOR shall provide safe and proper facilities for such access. DISTRICT representatives shall check in with the Project Superintendent and observe all safety requirements of CONTRACTOR. All persons entering the Site shall comply with CONTRACTOR's safety requirements as defined in CONTRACTOR's job site specific safety plan, Injury and Illness Prevention Plan and Subcontractor Injury Prevention Plan, while the Site is under the control of CONTRACTOR. CONTRACTOR shall maintain a Daily Job Site Sign-In Log requiring all subcontractors to sign-in at the job-site each day of work. The log shall include, at minimum, the date, time, number of workers, and the company name. **CONTRACTOR shall submit Daily Job Site Sign-In Log weekly to the DISTRICT Project Manager.**

01 14 16. 01 Access Policy for Non-District Representatives

CONTRACTOR shall be responsible for enforcing and posting a policy of safe and proper access for NON-DISTRICT REPRESENTATIVES onto the job-site during the course of construction.

01 14 16. 02 Keys

CONTRACTOR may request keys for access onto the site (gate key) and building keys available from DISTRICT Maintenance Lock Shop. Upon approval, keys will be issued contingent on contractor signing district key card and will be responsible for same. Lost keys will be charged at minimum $250 per key and shall be deducted from owed retention. Should lost or stolen keys require the site to be rekeyed, rekeying costs will be charged to CONTRACTOR through deduction from retention.

01 25 13. 01 Product Substitution Procedure

A. Whenever any material, process, or section is indicated or specified by grade, patent, brand, name, trade name or proprietary name, or by name of manufacturer, in the specifications, that specification shall be deemed to be used for the purpose of facilitating the description of material, process, or Section desired and shall be deemed to be followed by the words "or equal." Unless otherwise stated, CONTRACTOR may propose to use any material, process, or Section which is substantially equal to or better in every respect to that indicated or specified. If the material, process, or Section offered by CONTRACTOR is not substantially equal to or better in every respect to that specified, in the opinion of the ARCHITECT/ENGINEER or DISTRICT, CONTRACTOR shall furnish the material, process or Section specified. The burden of proof as to the equality of any material, process or Section shall rest with CONTRACTOR. CONTRACTOR may submit a request in writing for substitution of any "or equal" item, together with substantiating data, including submittal of specified item during the bid process, however, no later than **ten (10)** calendar days prior to the bid opening. After the bid opening all requests must be submitted, together with substantiating data, including submittal of specified item within **five (5)** calendar days after the Notice of Award is issued. No substitution requests will be considered after this allowed time. The decision of the ARCHITECT/ENGINEER or DISTRICT to accept or deny any request for substitution shall be final and binding. The provision authorizing submission of "or equal" justification data shall not in any way authorize an extension of time for performance of this Contract.

B. In the event CONTRACTOR furnishes any material, process or Section more expensive than that specified, the difference in cost of the material, process or Section so furnished shall be borne by CONTRACTOR.

C. If the substitution is accepted, the CONTRACTOR shall be solely and directly responsible for fitting accepted substitute materials and equipment into the available space in a manner acceptable to the ARCHITECT/ENGINEER and for the proper operation of the substituted equipment with all other equipment with which it may be associated. The CONTRACTOR shall bear all costs of meeting the above requirements including any additional ARCHITECT/ENGINEERING design or approval fees for presenting and/or implementing a proposed substitution, if the substitution is accepted.

D. In the event the words "no substitutions" follows any material, product, thing, or service specified by grade, patent, brand, name, trade name or proprietary name, or by name of manufacturer, CONTRACTOR shall provide the specified item. The District Designee has made a finding that a particular material, product, thing, or service is designated by specific brand or trade name for one or more of the purposes listed in California Public Contract Code Section 3400 (c) (1-4). In such event, failure to provide a bid for the specified item(s) will be automatic grounds for rejection of the bid.

01 25 13. 02 <u>Standardization of Products and Equipment</u>

Pursuant to Public Contract Code 3400(c)(2), Fresno Unified School District finds that it is in the best interest of the DISTRICT to standardize the products, equipment, and materials listed in Exhibit A-1 and Exhibit A-2 in order to match other products/equipment in use ~~at~~ on a particular work of improvement either completed or in the course of completion. Where a specific brand, trade name, material, or product identified in the bid documents is also listed in Exhibit A-1 or Exhibit A-2, it shall be deemed to be followed by the words "No Substitutions," and CONTRACTOR shall not make or request substitutions regarding any such product, equipment or material. Furthermore, inadvertent acceptance by the DISTRICT, DISTRICT REPRESENTATIVE, or ARCHITECT/ENGINEER through a process of submittals, change orders, or oversight shall not constitute an acceptance of a substituted item in lieu of a DISTRICT standardized item. CONTRACTOR shall bear the entire responsibility and cost for removing any installed substituted item and replacing with DISTRICT specified standard. Exhibit A-1 and Exhibit A-2 may be obtained from DISTRICT Purchasing Department web page under public works CUPCCAA menu: https://www.fresnounified.org/dept/purchasing/Pages/CUPCCAA.aspx or by contacting the Purchasing Department at (559) 457-3588.

01 26 00 CONTRACT MODIFICATION PROCEDURES

01 26 00. 01 <u>Changes and Extra Work</u>

A. DISTRICT may, as provided by law and, without invalidating this Contract, order extra work or make changes by altering, adding to, or deducting from work and the Contract sum shall be adjusted accordingly. Upon a change order request by the DISTRICT or the DISTRICT'S representative, the CONTRACTOR shall submit a breakdown of all costs and/or credits incurred to accomplish the requested change, including subcontractor(s) and supplier(s) written quotations for the extra work or change in work. The breakdown shall be of sufficient detail to allow justification of additional costs and/or credits. CONTRACTOR shall submit the actual completed takeoff and pricing. Time extension(s) will not be granted for insufficient breakdown data that requires re-submittal, or for pricing that in the judgment of the DISTRICT is not consistent with reasonable cost. All the Work shall be subject to the conditions of this Contract and it shall be in accordance with all applicable legal requirements including, but not limited to, the provisions of Title 24 of the California Code of Regulations except that any claim for extension of time caused by changes shall be adjusted at the time of ordering the change. DISTRICT has the discretionary authority to order changes on a time and material basis, with adjustments to time, made after CONTRACTOR has justified, through documentation, the impact on the critical path of the Project. The issuance of a change order pursuant to this Section in connection with any change authorized by the DISTRICT under this Section shall not be deemed a condition

precedent to CONTRACTOR's obligation to promptly commence and diligently complete any such change authorized in writing by the DISTRICT hereunder. The DISTRICT's right to make changes shall not invalidate the Contract nor relieve the CONTRACTOR of any liability or other obligations under the Contract Documents. Any requirement of notice of changes in the scope of Work to the Surety shall be the responsibility of the CONTRACTOR. The DISTRICT may make changes to bring the Work or the Project into compliance with environmental requirements or standards established by local, state or federal statutes, codes, ordinances, and/or regulations enacted after award of the Contract.

B. Notwithstanding any other provision in the Contract Documents, the adjustment in the Contract sum, if any, and the adjustment in the Contract time, if any, set out in a change order shall constitute the entire compensation and/or adjustment in the Contract time due CONTRACTOR arising out of the change in the Work. **The amount of the compensation due CONTRACTOR shall be calculated pursuant to subparagraph I of this Section.** The entire compensation shall not include delay damages (due to processing of a change order and/or refusal to sign a change order) and/or indirect, consequential, and/or incidental costs including any project management costs, extended home office and field office overhead, administrative costs, and/or profit, other than those amounts authorized under subparagraph I of this Section. If the DISTRICT approves of a change, a written change order prepared on behalf of the DISTRICT shall be forwarded to the CONTRACTOR describing the change and setting forth the adjustment to the Contract Time and the Contract Price, if any, on account of such change. All change orders shall be in full payment and final settlement of all claims for direct, indirect and consequential costs, including without limitation, costs of delays or impacts related to, or arising out of, items covered and affected by the change order, as well as any adjustments to the Contract Time. Any claim or item relating to any change incorporated into a change order not presented by the CONTRACTOR for inclusion in the change order shall be deemed waived. The CONTRACTOR shall execute the change order prepared pursuant to the foregoing. Once the change order has been prepared and forwarded to the CONTRACTOR for execution, without the prior approval of the DISTRICT which may be granted or withheld in the sole and exclusive discretion of the DISTRICT, the CONTRACTOR shall not modify or amend the form or content of such change order, or any portion thereof. The CONTRACTOR's attempted or purported modification or amendment of any such change order, without the prior approval of the DISTRICT, shall not be binding upon the DISTRICT; any such unapproved modification or amendment to such change order shall be null, void and unenforceable. In the event of any amendment or modification made by the CONTRACTOR to a change order for which there is no prior approval by the DISTRICT, in accordance with the provisions of this Section, unless otherwise expressly stated in its approval or ratification of such change order, any action of the Board of Education to approve or ratify such change order shall be deemed to be limited to the change order as prepared by the ARCHITECT; such approval or ratification of such change order shall not be deemed the DISTRICT's approval or ratification of any unapproved amendment or modification by the CONTRACTOR to such change order.

C. In giving instructions, the ARCHITECT/ENGINEER shall have authority to make minor changes in work not involving a change in cost, and not inconsistent with purposes of the Project. Any minor changes affecting building structure or fire ratings shall be by formal Change Order and will require approval by the Division of the State Architect or State Fire Marshall. Otherwise, except in an emergency endangering life or property, no extra work or change shall be made unless made pursuant to a written order from DISTRICT and no claim for any addition to the Contract amount shall be valid unless by action of the governing board of DISTRICT. Within fifteen (15) days after receipt of a written order directing a change in the Work or furnishing the written notice regarding any oral order directing a change in the Work, the CONTRACTOR shall submit to the DISTRICT a detailed written statement setting forth the amount of any adjustment to the Contract Price on account thereof, properly itemized and supported by sufficient substantiating data to permit evaluation of the same, and the extent of adjustment of the Contract Time, if any, required by such change. No claim or adjustment to the Contract Price or the Contract Time shall be allowed if not asserted by the CONTRACTOR in strict conformity herewith or if asserted after Final Payment is made under the Contract Documents.

D. If the CONTRACTOR claims that additional cost or time is involved because of (1) any oral or written interpretation, (2) any order by the DISTRICT to stop the Work where the CONTRACTOR was not at fault, or (3) any written order for a minor change in the Work issued, the CONTRACTOR may make such claim for additional work. However, any oral order, direction, instruction, interpretation, or determination from the DISTRICT, the DISTRICT's Inspector of Record, or the ARCHITECT/ENGINEER, which in the opinion of the CONTRACTOR causes any change to the scope of the Work, or otherwise requires an adjustment to the Contract Price or the Contract Time, shall be treated as a change only if the CONTRACTOR gives the ARCHITECT and the DISTRICT written notice within ten (10) days of the order, directions, instructions, interpretation or determination and prior to acting in accordance therewith. Time is of the essence in CONTRACTOR's written notice pursuant to the preceding sentence so that the DISTRICT can promptly investigate and consider alternative measures to address the order, direction, instruction, interpretation or determination giving rise to CONTRACTOR's notice. Accordingly, CONTRACTOR acknowledges that its failure, for any reason, to give written notice within ten (10) days of such order, direction, instruction, interpretation or determination shall be deemed CONTRACTOR's waiver of any right to assert or claim any entitlement to an adjustment of the Contract Time or the Contract Price on account of such order, direction, instruction, interpretation or determination. The written notice shall state the date, circumstances, extent of adjustment to the Contract Price or the Contract Time, if any, requested, and the source of the order, directions, instructions, interpretation or determination that the CONTRACTOR regards as a change. Unless the CONTRACTOR acts in strict accordance with this procedure, any such order, direction, instruction, interpretation or determination shall not be treated as a change and the CONTRACTOR hereby waives any claim for any adjustment to the Contract Price or the Contract Time on account thereof.

E. Notwithstanding any other language in the Contract Documents, the language of this Section, Changes and Extra Work, shall control as to the DISTRICT's allowance for labor, material, overhead and profit and labor burden.

F. At the discretion of the DISTRICT, the value of any extra work, change, or deduction shall be determined in one or more of the following ways:

1. By mutually agreeable lump sum proposal from CONTRACTOR. In the event a cost is requested for any extra work, the CONTRACTOR will be required to obtain and submit to the DISTRICT, for evaluation, three competitive price quotes on the work. The DISTRICT reserves the right to select the quotation which best meets its requirements.

2. By unit prices contained in CONTRACTOR's original bid and incorporated in the Contract Documents or fixed by subsequent agreement between DISTRICT and CONTRACTOR. All unit prices, whether set forth in the Contract or subsequently agreed upon, shall include overhead, increased premium on surety bonds, profit and all related expenses.

3. By cost of material and labor and percentage for overhead and profit

G. If none of the methods set forth above is agreed upon, the CONTRACTOR may be directed by DISTRICT to nonetheless promptly proceed with the Work. The cost of such Work shall then be determined by the DISTRICT on the basis of the CONTRACTOR's reasonable expenditures and savings, including, in the case of an increase in the Contract Sum, an allowance for overhead and profit in accordance with this Section. When both additions and/or credits are involved in any one change, the allowance for overhead and profit shall be figured on the basis of the net difference.

H. Allowable overhead and profit shall be applied to both additions and credits and not exceed the following for calculating the amount of compensation due CONTRACTOR:

	SUPERVISED WORK	OWN WORK (SELF-PERFORM)
To Contractor	**10%**	**10%**
To First Tier Subcontractor	**5%**	**10%**
To Second or Third Tier Subcontractor	**N/A**	**10%**

1. A first tier Subcontractor means a Subcontractor that has a direct contractual relationship with the CONTRACTOR.

2. A second or third tier Subcontractor means a Subcontractor that has a direct contractual relationship with a First Tier Subcontractor or a Second Tier Subcontractor, respectively.

I. The following definitions will apply to contract modifications:

1. **"Labor"** means the actual cost (prevailing locally) for wages paid directly to or on behalf of employee, as set forth by the Department of Industrial Relations, for each craft or type of worker(s) at the time the extra work is done. CONTRACTOR shall be compensated for the costs of labor actually and directly utilized in the performance of the change. Such labor costs shall be limited to field labor for which there is a prevailing wage rate classification. Included in "labor" are employer payments, directly to employee, of health & welfare, pension, vacation/holiday and training/other. The use of a labor classification, which would increase the extra work cost, will not be permitted unless the CONTRACTOR establishes the necessity for such additional costs. Use of a labor classification which would increase labor costs associated with any change shall not be permitted. Labor costs shall exclude costs incurred by the CONTRACTOR in preparing estimate(s) of the costs of the change, in the maintenance of records relating to the costs of the change, coordination and assembly of materials and information relating to the change or performance thereof, or the supervision and other overhead and general conditions costs associated with the change or performance thereof.

2. **"Material"** means all products, equipment and devices which are physically incorporated in the Work to be performed. Materials shall be at invoice or lowest current price at which such materials are locally available. The DISTRICT reserves the right to approve materials and sources of supply or to supply materials to the CONTRACTOR if necessary for the progress of the work. No markup shall be applied to any material provided by the DISTRICT. Any costs or expenses for equipment, facilities, or services not physically incorporated in the Work to be performed but necessary for its completion shall be considered "overhead", unless the DISTRICT agrees otherwise. CONTRACTOR shall be compensated for the costs of materials and equipment necessarily and actually used or consumed in connection with the performance of changes. If discounts by material suppliers are available for materials necessarily used in the performance of changes, they shall be credited to the DISTRICT. If materials and/or equipment necessarily used in the performance of changes are obtained from a supplier or source owned in whole or in part by the CONTRACTOR, compensation therefor shall not exceed the current wholesale price for such materials or equipment. If, in the reasonable opinion of the DISTRICT, the costs asserted by the CONTRACTOR for materials and/or equipment in connection with any change is excessive, or if the CONTRACTOR fails to provide satisfactory evidence of the actual costs of such materials and/or equipment from its supplier or vendor of the same, the costs of such materials and/or equipment and the DISTRICT's obligation for payment of the same shall be limited to the then lowest wholesale price at which similar materials and/or equipment are available in the quantities required to perform the change. The DISTRICT may elect to furnish materials and/or equipment for changes to the Work, in which event the CONTRACTOR shall not be compensated for the costs of furnishing such materials and/or equipment or any mark-up thereon.

3. **" Construction Equipment."** CONTRACTOR shall be compensated for the actual cost of the necessary and direct use of construction equipment in the performance of changes to the Work. Use of such construction equipment in the performance of changes to the Work shall be compensated in increments of hourly, weekly or monthly rates, whichever shall be the most economical to the DISTRICT when applied to the scope of the specific change. Rental time for construction equipment moved by its own power shall include time required to move such construction equipment to the site of the Work from the nearest

available rental source of the same. If construction equipment is not moved to the Site by its own power, CONTRACTOR will be compensated for the loading and transportation costs in lieu of rental time. The foregoing notwithstanding, neither moving time or loading and transportation time shall be allowed if the construction equipment is used for performance of any portion of the Work other than changes to the Work. Unless prior approval in writing is obtained by the CONTRACTOR from the ARCHITECT, and the DISTRICT, no costs or compensation shall be allowed for time while construction equipment is inoperative, idle or on standby, for any reason. The CONTRACTOR shall not be entitled to an allowance or any other compensation for construction equipment or tools used in the performance of changes to the Work where such construction equipment or tools have a replacement value of $1,000.00 or less. Construction equipment costs claimed by the CONTRACTOR in connection with the performance of any change to the Work shall not exceed rental rates (Blue Book) established by distributors or construction equipment rental agencies in the locality of the Site; any costs asserted which exceed such rental rates shall not be allowed or paid. Unless otherwise specifically approved in writing by the ARCHITECT, and the DISTRICT, the allowable rate for the use of construction equipment in connection with changes to the Work shall constitute full compensation to the CONTRACTOR for the cost of rental, fuel, power, oil, lubrication, supplies, necessary attachments, repairs or maintenance of any kind, depreciation, storage, insurance, labor (exclusive of labor costs of the construction equipment operator), and any all other costs incurred by the CONTRACTOR incidental to the use of such construction equipment.

4. **"Overhead"** means any necessary costs and expenses which are incurred in the performance of the Work excluding "labor", "materials," "labor burden," and construction equipment".

5. **"Labor Burden"** means employer paid costs and expenses (other than labor), resulting directly from change order work, associated with the employment of personnel on the project. These costs include additional expenditures for general liability, worker's compensation, social security, unemployment taxes and other direct costs resulting from Federal, State or local laws as well as assessments or benefits required by collective bargaining agreements. The maximum allowable cost by DISTRICT, for Labor Burden, shall not exceed forty-five percent (45%) of labor costs.

6. **"Other Items"** The DISTRICT may authorize other items which may be required on the extra work. These items would typically be different in their nature from those required by the original work, and which are of a type not ordinarily available from the CONTRACTOR or any of the Subcontractors. Invoices covering all such items may be required by DISTRICT.

J. If CONTRACTOR should claim that any instructions, request, drawing, specification, action, condition, omission, default, or other situation obligates DISTRICT to pay additional to CONTRACTOR or to grant an extension of time for the completion of the Contract, or constitutes a waiver of any provision of the Contract, CONTRACTOR shall notify the DISTRICT in writing of its claim within 10 days from the date it has actual or constructive notice of the factual basis supporting the claim. The CONTRACTOR'S failure to notify DISTRICT within the 10-day period shall be deemed a waiver and relinquishment of the claim against DISTRICT. If the notice is given within the specified time, the procedure for its consideration shall be as stated above in this Section.

K. Contractor Maintenance of Records: In the event that CONTRACTOR shall be directed to perform any changes to the Work pursuant to this Section, or should the CONTRACTOR encounter conditions which the CONTRACTOR, pursuant to this Section, believes would obligate the DISTRICT to adjust the Contract Price and/or the Contract Time, CONTRACTOR shall maintain detailed records on a daily basis. Such records shall include without limitation hourly records for labor and construction equipment and itemized records of materials and equipment used that day in connection with the performance of any change to the Work. In the event that more than one change to the Work is performed by the CONTRACTOR in a calendar day, CONTRACTOR shall maintain separate records of labor, construction equipment, materials and equipment for each such change. In the event that any Subcontractor, of any tier, shall provide or perform any portion of any change to the Work, CONTRACTOR shall require that each such Subcontractor maintain records in accordance with this Section. Each daily record maintained hereunder shall be

signed by CONTRACTOR's Superintendent or CONTRACTOR's authorized representative; such signature shall be deemed CONTRACTOR's representation and warranty that all information contained therein is true, accurate, complete, and relate only to the change referenced therein. All records maintained by a Subcontractor, of any tier, relating to the costs of a change to the Work shall be signed by such Subcontractor's authorized representative or Superintendent. All records maintained hereunder shall be subject to inspection, review and/or reproduction by the DISTRICT, the ARCHITECT, or the DISTRICT's Inspector of Record upon request. In the event that CONTRACTOR shall fail or refuse, for any reason, to maintain or make available for inspection, review and/or reproduction such records and the adjustment to the Contract Price on account of any change to the Work is determined pursuant to this Section, the DISTRICT's reasonable good faith determination of the extent of adjustment to the Contract Price on account of such change shall be final, conclusive, dispositive and binding upon CONTRACTOR. CONTRACTOR's obligation to maintain records hereunder is in addition to, and not in lieu of, any other CONTRACTOR obligation under the Contract Documents with respect to changes to the Work.

L. Adjustments to Contract Time: In the event of any change(s) to the Work pursuant to this Section, the Contract Time shall be extended or reduced by change order for a period of time commensurate with the time reasonably necessary to perform such change to the extent it extends or reduces the critical path on the Project schedule. Such time shall be requested in writing by the CONTRACTOR with the Contract price adjustment proposal. The time extension request shall be justified by the CONTRACTOR by submittal of a CPM analysis accurately portraying the impact of the change on the critical path of the project schedule. Changes performed within available float as indicated in the updated approved construction schedule shall not justify a time extension to the Contract. If completion of the Work is delayed by causes for which the DISTRICT is responsible and the delay is unreasonable under the circumstances involved, and not within the contemplation of the CONTRACTOR and the DISTRICT at the time of execution of the Contract, the CONTRACTOR shall not be precluded from the recovery of damages arising therefrom.

M. Change Order Requests or Claims Based Upon Concealed or Unknown Conditions: If conditions are encountered at the Site which are subsurface or otherwise concealed physical conditions, which differ materially from those indicated in the Contract Documents, or unknown physical conditions of an unusual nature, which differ materially from those ordinarily found to exist and generally recognized as inherent in construction activities of the character provided for in the Contract Documents, then notice by the observing party shall be given to the other party promptly before conditions are disturbed and in no event later than ten (10) days after first observance of the conditions. The ARCHITECT will promptly investigate such conditions, and if they differ materially and cause an increase or decrease in the CONTRACTOR's cost of, time required for, or performance of any part of the Work, will recommend an equitable adjustment in the Contract Sum, Contract Time, or both. If the ARCHITECT determines that the conditions at the Site are not materially different from those indicated in the Contract Documents and that no change in the terms of the Contract is justified, the ARCHITECT shall so notify the DISTRICT and the CONTRACTOR in writing, stating the reasons. Claims by either party in opposition to such determination must be made within seven (7) days after the ARCHITECT has given notice of the decision. If the DISTRICT and the CONTRACTOR cannot agree on an adjustment in the Contract Sum or the Contract Time, the adjustment shall be referred to the ARCHITECT for initial determination, subject to other proceedings pursuant to the dispute resolution provisions herein.

N. Discounts, Rebates, Refunds, and Excess Materials: For purposes of determining the cost, if any, of any change, addition, or omission to the Work hereunder, all trade discounts, rebates, refunds, and all returns from the sale of surplus materials and equipment shall accrue and be credited to the Contractor, and the Contractor shall make provisions so that such discounts, rebates, refunds and returns may be secured and the amount thereof shall be allowed as a reduction of the Contractor’s cost in determining the actual cost of construction for purposes of any change, addition, or omissions in the Work as provided herein. Should a change in work scope be made after materials have already been specially fabricated or delivered or paid for and CONTRACTOR is unable to provide a proper credit for such materials due to its custom or special nature, CONTRACTOR shall notify ARCHITECT/ENGINEER in writing

so that DISTRICT can determine whether or not such materials should be delivered and retained by DISTRICT as attic stock or surplus materials. CONTRACTOR shall not sell, give away, throw away, destroy or salvage such materials without DISTRICT's written consent.

01 26 00. 02 Claims for Extensions of Time; Notice of Claim

A. In the event of a delay, the CONTRACTOR shall provide a Notice of Delay within 24 hours of the event, and submit a schedule fragnet depicting the delay with all substantiating documentation within **ten (10) days** of the event.

B. The CONTRACTOR shall detail in writing the causes for any delays within ten (10) days of the beginning of any delay, or within ten (10) days after CONTRACTOR first recognizes the condition giving rise to a claim for additional time, whichever is earlier. The CONTRACTOR's claim for additional time shall include the cost associated with the extension, if any, all facts and documents supporting the claim, and a current schedule showing the impact on the critical path of any claimed delay and that the delay will extend the Work beyond the contractual completion date. In the case of a continuing delay caused by a single event, only one (1) notice of claim for time extension is necessary. If unusually severe weather conditions are the basis for a claim for additional time, such claim shall be documented by data substantiating that weather conditions were abnormal for the period of time and place, could not have been reasonably anticipated, and had an adverse effect on the critical path of the scheduled construction. DISTRICT shall then ascertain the facts and extent of the delay and may, in its sole discretion, grant an extension of time for completing the Project. The DISTRICT'S findings of fact regarding any delay shall be final and conclusive and binding on both parties. Extensions of time shall apply only to that portion of the Work affected by the delay and shall not apply to other portions of the Work not so affected.

C. In the event CONTRACTOR fails to provide the aforementioned written notice within ten (10) days, CONTRACTOR waives its right to any extension of time. In no event will CONTRACTOR be allowed to reserve its rights to assert a claim for time extension or additional cost associated with a delay later than as required by this Section, unless DISTRICT agrees in writing to allow such reservation. The sole remedy of CONTRACTOR for extensions of time for excusable but non-compensable delays described in this Claim for Extensions of Time, Notice of Claim Section where DISTRICT is not at fault shall be an extension of the Contract Time at no cost to DISTRICT.

D. In the event that the performance and/or completion of the Project is delayed at any time by any act or omission of District or by any employee or agent of District, by strikes, by lockouts, by fire, by embargoes, by flood, by unusually severe weather, by earthquake, by acts of war or force majeure, or by any other cause beyond the reasonable control of Contractor, the date for completion of the Project shall be extended for a reasonable period as a consequence of such delay.

1. Delay Days – Delay Days shall be considered working days. - Delay Days will be evaluated and identified as one of the three categories listed below. Excusable delays will create adjustments in the contract time. Compensable delays will create adjustments in both the contract sum and contract time. In the event of concurrent delays, no delay damages are recoverable by either the DISTRICT or the CONTRACTOR, but an extension in time shall be granted for each contemporaneous delay day occurring on the critical path. Contemporaneous delays shall be evaluated using a schedule fragnet(s), schedule updates, daily reports, notices, and any other records of delaying events.

1. Excusable & Compensable	2. Excusable &Non-Compensable	3. Inexcusable
Delays caused by the DISTRICT, the ARCHITECT, or the DISTRICTS separate contractors(s)	a. Unusually severe weather b. Strikes or labor shortages c. Acts of God d. Fires, war, Acts of government & pestilence e. Unusual and unanticipated delays in manufacturing and/or deliveries of materials and/or equipment f. Concurrent Delays	Delays caused by the CONTRACTOR, Subcontractor(s), materialmen or suppliers.

2. Time Extensions For Unusually Severe Weather:

A. General:

1) **"Inclement Weather"** is the anticipated precipitation-affected days (including Mud Days) set forth in the applicable NOAA Meteorological Data Chart (broken down by each month of the year) which CONTRACTOR is expected to include in its project schedule and which anticipated weather days are not eligible for a time extension. DISTRICT reserves the right to update Meteorological Data included in the NOAA Chart to be provided by CONTRACTOR as set forth below, so that it reflects the most accurate data for the project site, site conditions and locality.
2) **"Unusually Severe Weather"** is more severe than the anticipated Inclement Weather set forth in the applicable NOAA Meteorological Data Chart for any given month.
3) **NOAA**, is the National Oceanic and Atmospheric Administration.
4) **"Mud"** (aka Mud Days) shall be considered as muddy site conditions, which prohibit access to and around the project site, including access to the buildings. CONTRACTOR agrees that even if the anticipated normal precipitation were exceeded for a given month, not all Mud Days are eligible for time extensions. Only a portion of the actual Mud Days will be considered for a time extension, of which they will be the percentage of actual precipitation that are above and beyond the anticipated normal precipitation or "Inclement Weather": See "Unusually Severe Weather" and “Inclement Weather” definitions above. Also, precipitation and Mud need to affect the activities on the critical path in order for them to impact the project schedule. If precipitation and Mud do not affect the critical path of the project schedule, there is no effect to the project and such conditions are not eligible for time extensions. Differing site soil conditions and drainage patterns will create individual variations in how "Mud" affects the site and the progress of the Work. It is the CONTRACTOR’s obligation to become aware of the site soil conditions, drainage patterns, and other elements that may affect the resulting impacts due to Mud.

B. The provisions herein specify the procedures for the determination of excusable time extensions for unusually severe weather. Inclement Weather, using the NOAA data (to be provided by the Contractor prior to first payment request and approved by the ARCHITECT - "sample" NORMALS, MEANS AND EXTREMES data chart provided herein below) and resulting Mud impacts due to anticipated precipitation, shall be scheduled into the schedule. The Inclement Weather and Mud days shall be shown on CONTRACTOR’s schedule and if not used shall become float for the project’s use. CONTRACTOR will not be allowed a day-for-day weather delay when the work anticipates construction during a period that normally includes Inclement Weather. A day-for-day extension will only be allowed for those days in excess of the norm as set forth in the applicable NOAA Meteorological Data Chart. CONTRACTOR is expected to work seven (7) days per week (if necessary, irrespective of Inclement Weather), to maintain access, and to protect the work under construction

from the effects of Inclement Weather.In order for the ARCHITECT and DISTRICT to award a time extension under this clause, CONTRACTOR must satisfy the following conditions:

1) The unusual weather experienced at the project site during the affected contract period must be found to be Unusually Severe Weather, that is, more severe than the anticipated Inclement Weather and Mud for any given month.
2) The Unusually Severe Weather must actually cause a delay to the critical path of the project schedule, and must not be on a non-work weekday such as a holiday.
3) After anticipated Inclement Weather and Mud delays are exceeded, an Unusually Severe Weather delay day will occur when adverse weather prevents CONTRACTOR from proceeding with more than seventy-five percent (75%) of the normal labor and equipment force towards completion of the day's current critical activity controlling item on the accepted schedule for a period of at least five hours, and the crew is dismissed as a result thereof. Upon experiencing a critical path delay due to Unusually Severe Weather, CONTRACTOR shall seek a time extension, in writing, from the ARCHITECT in written form, including a weather time impact analysis supporting any alleged delays due to Unusually Severe Weather. Failure to provide such written information within ten (10) days after experiencing Unusually Severe Weather shall be a waiver of the right to an extension of time therefor.

If each of the foregoing conditions are met, an excusable a non-compensable time extension will be granted.

Upon Notice-to-Proceed being issued and continuing through the contract duration, CONTRACTOR shall record each occurrence of Inclement Weather and Mud, and the resulting impact to the progress of scheduled work. Inclement Weather days will be as defined by the applicable NOAA data (to be submitted by CONTRACTOR as referenced above), and will be counted chronologically from the first to the last day of each month, with each daily incidence of Inclement Weather being counted as whole day. Once the number of days of anticipated Inclement Weather and Mud are exceeded in a given month, CONTRACTOR will become eligible for an excusable, non-compensable time extension for Unusually Severe Weather. CONTRACTOR shall incorporate all approved schedule modifications into the current monthly schedule update.

C. Meteorological Data Chart – (Sample – Applicable Chart to be Submitted)

Meteorological Data for Fresno, California Normals, Means and Extremes

Month	TEMPERATURE (degrees F)				PRECIPITATION***		FOG
	Normal		Extremes		Mean* Number Calendar /Work Days per month	Normal (in)	Mean**Number Calendar /Work Days per month
	Daily Max	Daily Min	Record Highest	Record Lowest			
Jan	54.1	37.4	78	19	7.5/5.4	1.96	11.8/8.4
Feb	61.7	40.5	80	24	7.1/5.1	**1.8**	6.0/4.3
Mar	66.6	43.4	90	26	7.1/5.1	1.89	1.7/1.2
Apr	75.1	47.3	100	32	4.1/2.9	0.97	0.3/0.2
May	84.2	53.7	107	36	1.9/1.4	0.3 -	0.1/0.1
Jun	92.7	60.4	110	44	0.7/0.5	0.08	0.0/0.0
Jul	98.6	65.1	112	50	0.1	13.1 '	0.01	0.0/0.0
Aug	96.7	63.8	111	49	0.3/0.2	0.03	0.1/0.1
Sep	90.1	58.8	111	37	**1.0/0.7**	0.24	0.1/0.1
Oct	79.7	50.7	102	27	2.2/1.6	0.53	0.9/0.6

Nov	64.7	42.5	89	26	- .2/3.7	1.37	5.$^{8}/_{4}$.1
Dec	53.7	37.1	78	18	6.7/4.8	1.42	12.1/8.6
Year					44.$^{1}/_{3}$1.5	10.6	38.8/27.7

Source: NOM, National Oceanic and Atmospheric Administration

*Precipitation of .01 inches or more

**Heavy Fog visibility % mile or less

***Refer to term Mud, for Mud impacts.

01 26 00. 03 <u>Claims for Additional Cost or Monetary Damages, Notice of Claim</u>

If CONTRACTOR claims compensation for any damage allegedly sustained by reason of any acts of DISTRICT or its agents, or employees, CONTRACTOR shall submit to the ARCHITECT/ENGINEER written notice prior to proceeding with the work at issue, where CONTRACTOR is aware or should be aware of such claim's existence before the work at issue is performed. Where monetary damage cannot be ascertained prior to the performance of the work at issue, CONTRACTOR shall submit to the ARCHITECT/ENGINEER a written statement of the damage sustained within five (5) days after sustaining the damage. In addition, on or before the 15th day of the month after the month in which the damage was sustained, CONTRACTOR shall file with DISTRICT an itemized statement indicating the factual basis in support of its claim and the amount of damage. Each Claim for additional cost or monetary damage must include any associated claim for additional time and its associated costs, and all facts and documents supporting the claim, and a current schedule showing the impact on the critical path of any claimed delay and that the delay will extend the Work beyond the contractual completion date, including, but not limited to copies of written computations of delay damages and supporting documentation including but not limited to any relevant job cost, bidding and home office overhead information. Prior notice is not required for claims relating to an emergency endangering life or property on the Project. If CONTRACTOR believes additional cost is involved for reasons, including, but not limited to the following: a written interpretation from the ARCHITECT/ENGINEER, an order by DISTRICT to stop the Work where CONTRACTOR or its subcontractors or suppliers were not at fault, a written order for a minor change in the Work issued by the ARCHITECT, failure of payment by DISTRICT, compensable termination of the Contract by DISTRICT, DISTRICT's compensable suspension of the Work, or other reasonable grounds, a claim shall be filed in accordance with the procedure established herein. If CONTRACTOR fails to comply with any provision of this Section concerning the submission of written notice or statements, it waives any claim for compensation and shall not be entitled to consideration for payment on account of any such damage or monetary claim.

<u>Submission of Claim Under Penalty of Perjury:</u> California Penal Code section 72, provides that any person who presents for payment with intent to defraud any district board or officer, any false or fraudulent claim, bill, account, voucher, or writing, is punishable by fines not exceeding ten thousand dollars ($10,000.00) and/or imprisonment in the state prison. Government Code sections 12650, et seq., pertains to civil penalties that may be recovered from persons (including corporations, etc.) for presenting a false claim for payment or approval, presents a false record or statement to get a false claim paid or approved, or other acts, to any officer or employee of any political subdivision of the State of California. Any person or corporation violating the provisions of Government Code sections 12650, et seq., shall be liable for three times the amount of the damages of the political subdivision, plus a civil penalty, plus costs.

The CONTRACTOR shall certify, at the time of submission of a claim, as follows:

I, _____, being the _____ (Must be an officer) of_____ (CONTRACTOR), declare under penalty of perjury under the laws of the State of California, and do personally certify and attest that: I have thoroughly reviewed the attached claim for additional cost and/or extension of time, and know its

contents, and said claim is made in good faith; the supporting data is truthful, accurate and complete; that the amount requested accurately reflects the adjustment for which the CONTRACTOR believes the DISTRICT is liable; and further, that I am familiar with California Penal Code section 72 and Government Code section 12650 et seq, pertaining to false claims, and further know and understand that submission or certification of a false claim may lead to fines, imprisonment and/or other severe legal consequences.

By: _____
Dated: _____

CONTRACTOR understands and agrees that any claim submitted without this certification does not meet the terms of the Contract Documents, that DISTRICT, or DISTRICT's representatives, may reject the claim on that basis and that unless CONTRACTOR properly and timely files the claim with the certification, CONTRACTOR cannot further pursue the claim in any forum, as a condition precedent will not have been satisfied.

01 26 00. 04 Claims Procedure

A. ARCHITECT's Review: The ARCHITECT will review claims and take one or more of the following preliminary actions within ten (10) days of receipt of a claim: request additional supporting data from the claimant; submit a schedule to the parties indicating when the ARCHITECT expects to take action; reject the claim in whole or in part, stating reasons for rejection; recommend approval of the claim by the other party; or suggest a compromise. The ARCHITECT may also, but is not obligated to, notify the Surety, if any, of the nature and amount of the claim.

B. Documentation if Resolved: If a claim has been resolved, the ARCHITECT will prepare or obtain appropriate documentation.

C. Action if Not Resolved: If a claim has not been resolved, the party making the claim shall, within ten (10) days after the ARCHITECT's preliminary response, take one or more of the following actions: submit additional supporting data requested by the ARCHITECT; modify the initial claim; or notify the ARCHITECT that the initial claim stands.

D. ARCHITECT's Written Decision: If a claim has not been resolved after consideration of the foregoing and of other evidence presented by the parties or requested by the ARCHITECT, the ARCHITECT will notify the parties in writing that the ARCHITECT's decision will be made within seven (7) days. Before the expiration of such time period, the ARCHITECT will render to the parties its written decision relative to the claim, including any change in the Contract Sum or Contract Time or both. The ARCHITECT may, but is not obligated to, notify the Surety and request the Surety's assistance in resolving the controversy. If either party disputes the ARCHITECT's decision, it may proceed with the dispute resolution provisions which follow.

E. Claims: Except for tort claims, all claims by the CONTRACTOR for a time extension, payment of money or damages arising from work done by, or on behalf of, the CONTRACTOR pursuant to this Contract and payment of which is not otherwise expressly provided for or the claimant is not otherwise entitled to, or an amount the payment of which is disputed by the DISTRICT, of $375,000 or less shall be subject to the settlement and arbitration provisions/procedures provided in this Claims Procedure Section and by Public Contract Code Sections 20104 et seq. Those sections require that the claim be in writing, include the documents necessary to substantiate the claim, and be filed on or before the final date of payment, and that such claim is subject to all time limits and notice and submission requirements for the filing of claims under the Contract.

1. For claims less than $50,000, the DISTRICT shall respond in writing within 45 days of receipt of the claim or may request in writing within 30 days any additional documentation supporting the claim or relating to defenses to the claim DISTRICT may have against CONTRACTOR, which, if required, shall be provided

upon mutual agreement of the DISTRICT and CONTRACTOR. The DISTRICT'S written response to the claim, as further documented, shall be submitted to CONTRACTOR within 15 days after receipt of the further documentation or within a time period no greater than that taken by the CONTRACTOR in producing the additional information, whichever is greater.

2. For claims over $50,000 and less than or equal to $375,000, the DISTRICT shall respond in writing to all written claims within 60 days of receipt of the claim, or may request, in writing, within 30 days of receipt of the claim, any additional documentation supporting the claim or relating to defenses to the claim DISTRICT may have against CONTRACTOR. If additional information is thereafter required, it shall be requested and provided upon mutual agreement of DISTRICT and CONTRACTOR. The DISTRICT's written response to the claim, as further documented, shall be submitted to the CONTRACTOR within 30 days after receipt of the further documentation, or within a period of time no greater than that taken by the CONTRACTOR in producing the additional information or requested documentation, whichever is greater.

F. If the CONTRACTOR disputes the DISTRICT's written response or the DISTRICT fails to respond within the time prescribed, the CONTRACTOR may so notify the DISTRICT, in writing, either within 15 days of receipt of the DISTRICT's response or within 15 days of the DISTRICT's failure to respond within the time period prescribed, respectively, and demand an informal conference to meet and confer for settlement of the issues in dispute, which conference shall be scheduled by DISTRICT within 30 days of such demand.

G. If the claim or any portion of the claim remains in dispute, the CONTRACTOR may file a claim as provided in Chapter 1 (commencing with section 900) and Chapter 2 (commencing with section 910) of Part 3 of Division 3.6 of Title 1 of the Government Code. For purposes of those provisions, the running of the period of time within which a claim must be filed shall be tolled from the time the CONTRACTOR submits his or her written claim until the time that the claim is denied as a result of the meet and confer process, including any period of time utilized by the meet and confer process. Further, should legal action be pursued, the provisions set forth in Public Contract Code Section 20104.4, including but not limited to those relating to mediation and arbitration, shall be followed.

H. In the event of a dispute between the parties as to performance of the Work, the interpretation of this Contract or payment or nonpayment for work performed or not performed, the parties shall attempt to resolve the dispute. Pending resolution of the dispute, CONTRACTOR agrees to continue the work diligently to completion. If the dispute is not resolved, CONTRACTOR agrees it will neither rescind the Contract nor stop the progress of the work, but CONTRACTOR'S sole remedy shall be to comply with the Contract notice and dispute resolution provisions in all respects, and subsequently submit such controversy to determination by a court of the State of California, in Fresno County, having competent jurisdiction of the dispute, as set forth herein and by statute, after the Project has been completed, and not before.

01 29 00 PAYMENT PROCEDURES

01 29 73. 01 <u>Cost Breakdown and Periodic Estimates</u>

A. On forms approved by DISTRICT, CONTRACTOR shall furnish the following:

1. A detailed estimate giving a complete breakdown of the Contract price for each Project or site within 10 days of award of the Contract. CONTRACTOR shall furnish a detailed Cost Breakdown (Schedule of Values) of the Contract Price consistent with the cost-loaded work activities included in the approved construction schedule per school site, if award is for multiple sites. In preparing the Cost Breakdown, CONTRACTOR shall carefully list the true cost of each activity or item for which payment will be requested. The CONTRACTOR shall not "front-load" the Cost Breakdown with false dollar amounts for activities to be performed in the early stages of the Project. The DISTRICT may, in its sole discretion, utilize the costs listed in the Cost Breakdown (Schedule of Values) as the true cost of items to be deducted from the Contract Price through credit or deductive change order. The values for each line item

shall include the amount of overhead and profit applicable to each item of work and shall include, at a minimum, a breakdown between rough and finish Work for the basic trades as well as individual dollars figures for large dollar equipment and materials to be installed or furnished for the Project. No individual line item or scope of work in the Cost Breakdown shall exceed $50,000, except with the express, written consent of the DISTRICT. Exceptions will be given by the DISTRICT for a single item of equipment for which the true cost exceeds $50,000. The Cost Breakdown shall be subject to the DISTRICT's review and approval of the form and content thereof. Upon request, CONTRACTOR shall provide DISTRICT with data and documentation substantiating the accuracy of the proposed line items. In the event that the DISTRICT shall reasonably object to any portion of the Cost Breakdown, within ten (10) days of the DISTRICT's receipt of the Cost Breakdown, the DISTRICT shall notify the CONTRACTOR, in writing of the DISTRICT's objection(s) to the Cost Breakdown together with any request for substantiating data or documentation. Within five (5) days of the date of the DISTRICT's written objection(s) and request for substantiating data and documentation, CONTRACTOR shall submit a revised Cost Breakdown to the DISTRICT for review and approval together with the requested data and documentation. The foregoing procedure for the preparation, review and approval of the Cost Breakdown shall continue until the DISTRICT has approved of the entirety of the Cost Breakdown. Once the Cost Breakdown is approved by the DISTRICT, the Cost Breakdown shall not be thereafter modified or amended by the CONTRACTOR without the prior consent and approval of the DISTRICT, which may be granted or withheld in the sole reasonable discretion of the DISTRICT. Notwithstanding any provision of the Contract Documents to the contrary, payment of the CONTRACTOR's overhead, supervision and general conditions costs and profit, as such items are reflected in the Cost Breakdown, shall be made incrementally as included in the activities included in the approved construction schedule.

2. A periodic itemized estimate of work done for the purpose of making partial payments; and

3. A schedule of estimated monthly payments due CONTRACTOR within 10 days of request by DISTRICT.

01 29 76. 01 <u>Progress Payment Procedures / Final Payment</u>

A. <u>Procedure:</u> On or before the twenty-fifth (25th) day of each calendar month during the progress of the portion of the Work for which payment is being requested, the CONTRACTOR shall submit to the ARCHITECT an itemized Application for Payment on a form acceptable to DISTRICT for operations completed in accordance with the Cost Breakdown/Schedule of Values per school site, if award is to multiple sites. Such application shall be notarized, if required, and supported by the following, or such portion thereof, as ARCHITECT/DISTRICT require:

1. The amount paid to the date of the Application to the CONTRACTOR, to all its Subcontractors, and all others furnishing labor, material, or equipment for its Contract;

2. The amount being requested with the Application for Payment by the CONTRACTOR on its own behalf and separately stating the amount requested on behalf of each of the Subcontractors and all others furnishing labor, material, and equipment under the Contract;

3. The balance that will be due to each of such entities after said payment is made;

4. A certification that the Record Drawings and Annotated Specifications are current;

5. The DISTRICT approved additions to and subtractions from the Contract Sum and Time;

6. An updated schedule current through the last working day prior to the date of submission;

7. A summary of the retentions (each Application shall provide for retention as set forth herein);

8. Material invoices, evidence of equipment purchases, rentals, and other support and details of cost as the DISTRICT may require from time to time;

9. The percentage of completion of the CONTRACTOR's Work by line item; and

10. A statement showing all payments made by the CONTRACTOR for labor and materials on account of the Work covered in the preceding Application for Payment. Such applications shall not include requests for payment of amounts not authorized by change order or that the CONTRACTOR does not intend to pay to subcontractors or others because of a dispute or other reason.

B. If requested by the DISTRICT, an application for payment shall be accompanied by a summary showing payments that will be made to subcontractors covered by such application, and unconditional waivers and releases of claims and stop payment notices, from each subcontractor listed in the preceding application for payment covering sums disbursed pursuant to that preceding application for payment.

C. DISTRICT shall have the right to correct any error made in any estimate for payment. DISTRICT has the discretionary right to require that the CONTRACTOR provide the following information with the application for payment:

1. certified payroll records covering the period of the prior application for payment;

2. unconditional waivers and releases from all subcontractors and/or suppliers for which payment was requested under the prior application for payment;

3. conditional waivers and releases upon final payment from all subcontractors and/or suppliers for final payment.

4. receipts or bill of sale for any items;

5. revised construction progress schedule as approved by the DISTRICT; and

6. verification by Inspector of Record (IOR) that the as-built drawings and annotated specifications are up to date.

D. Purchase of Materials and Equipment: The CONTRACTOR is required to order, obtain, and store materials and equipment sufficiently in advance of its Work at no additional cost or advance payment from DISTRICT. Payments are only to be made by DISTRICT on account of materials and equipment incorporated in the Work. Any exceptions must be approved in advance in writing and are in the sole and exclusive discretion of DISTRICT.

E. Warranty of Title: The CONTRACTOR warrants that title to all Work covered by an Application for Payment will pass to the DISTRICT no later than the time of payment. The CONTRACTOR further warrants that upon submittal of an Application for Payment all Work for which Certificates for Payment have been previously issued and payments received from the DISTRICT shall, to the best of the CONTRACTOR's knowledge, information, and belief, be free and clear of liens, claims, security interests, or encumbrances in favor of the CONTRACTOR, Subcontractors, material and equipment suppliers, or other persons or entities making a claim by reason of having provided labor, materials, and equipment relating to the Work.

F. Review of Progress Payment Application: After review by the IOR, the ARCHITECT will, within seven (7) days after receipt of the CONTRACTOR's Application for Payment, either approve such payment or notify the CONTRACTOR in writing of the ARCHITECT's reasons for withholding approval in whole or in part as provided herein. The review of the CONTRACTOR's Application for Payment by the ARCHITECT is based on the

ARCHITECT's observations at the Site and the data comprising the Application for Payment that the Work has progressed to the point indicated and that, to the best of the Architect's knowledge, information, and belief, the quality of the Work is in accordance with the Contract Documents. The foregoing representations are subject to an evaluation of the Work for conformance with the Contract Documents, to results of subsequent tests and inspections, to minor deviations from the Contract Documents correctable prior to completion, and to specific qualifications expressed by the ARCHITECT. The issuance of a Certificate for Payment will further constitute a representation that the CONTRACTOR is entitled to payment in the amount certified. However, the issuance of a Certificate for Payment will not be a representation that the ARCHITECT has:

1. Made exhaustive or continuous on-Site inspections to check the quality or quantity of the Work;

2. Reviewed construction means, methods, techniques, sequences, or procedures;

3. Reviewed copies of requisitions received from Subcontractors, material and equipment suppliers, and other data requested by the DISTRICT to substantiate the CONTRACTOR's right to payment; or

4. Made an examination to ascertain how or for what purpose the CONTRACTOR has used money previously paid on account of the Contract Sum.

G. Payments to CONTRACTOR:

1. Within thirty (30) days after DISTRICT approval of Application for Payment, CONTRACTOR shall be paid a sum equal to ninety-five percent (95%) of the undisputed value of the Work performed up to the last day of the previous month, less the aggregate of previous payments. The value of the Work completed shall be an estimate only, no inaccuracy or error in said estimate shall operate to release the CONTRACTOR, or any surety, from damages arising from such Work or from enforcing each and every provision of this Contract, and the DISTRICT shall have the right subsequently to correct any error made in any estimate for payment.

2. The CONTRACTOR shall not be entitled to have any payment requests processed, or be entitled to have any payment made for work performed, so long as any lawful or proper direction given by the DISTRICT concerning the Work, or any portion thereof, remains uncomplied with. Payment shall not be a waiver of any such direction.

H. Payment to Subcontractors and Suppliers: Without creating any rights in favor of the subcontractors or suppliers in this Contract, no later than seven (7) days after receipt, pursuant to Business and Professions Code Section 7108.5, the CONTRACTOR shall pay to each Subcontractor, out of the amount paid to the CONTRACTOR on account of such Subcontractor's portion of the Work or supplier’s materials or equipment furnished, the amount to which said Subcontractor or supplier is entitled, reflecting percentages actually retained from payments to the CONTRACTOR on account of such Subcontractor's portion of the Work or supplier’s portion of the materials. The CONTRACTOR shall, by appropriate agreement with each Subcontractor, require each Subcontractor to make payments to Sub-subcontractors and Sub-suppliers in a similar manner.

I. Payment Information and Percentage of Completion: The DISTRICT will, on request and in the DISTRICT’s sole discretion, furnish to a Subcontractor or supplier, if practicable, information regarding percentages of completion or amounts applied for by the CONTRACTOR, and action taken thereon by the DISTRICT, on account of portions of the Work done by such Subcontractor or materials or equipment furnished by such supplier. The DISTRICT shall

have no obligation to pay, or to see to the payment of, money to a Subcontractor or supplier except as may otherwise be required by law.

J. Payment Not Constituting Approval or Acceptance: An approved Application for Payment, issuance of a Certificate for Payment, a progress payment, or partial or entire use or occupancy of the Project by the DISTRICT shall not constitute acceptance of work not performed in accordance with the Contract Documents.

K. Joint Checks: DISTRICT shall have the right, if necessary for the protection of the DISTRICT, to issue joint checks made payable to the CONTRACTOR and Subcontractors and/or material or equipment suppliers. The joint check payees shall be responsible for the allocation and disbursement of funds included as part of any such joint payment. However, DISTRICT has no duty to issue joint checks. In no event shall any joint check payment be construed to create any contract between the DISTRICT and a Subcontractor or supplier of any tier, any obligation from the DISTRICT to such Subcontractor, or rights in such Subcontractor against the DISTRICT.

L. Payment Upon Completion of the Work, or designated portion thereof, and upon application by the CONTRACTOR: the DISTRICT shall make payment reflecting adjustment in retainage, if any, for such Work, or portion thereof, as provided in the Contract Documents in absence of any stop payment notices, liens or claims by DISTRICT for liquidated damages or other damages.

M. Final Payment: CONTRACTOR shall immediately upon issuance of the Punch List described in Section **01 29 93**, initiate work on all items therein related to CONTRACTOR's Work and diligently complete the same. At least fifteen (15) days prior to final inspection, CONTRACTOR shall submit two (2) copies of complete operations and maintenance manuals for review. All such information, manuals, and drawings shall be submitted in 8½" x 11" binders, with a table of contents listing all items within, as well as in digital format on a compact disc. The binder shall also include a list of Subcontractors, with their addresses and phone numbers, and names of persons to contact in case of emergencies. Before calling for a final inspection, CONTRACTOR shall determine that the following work has been performed:

1. The Work has been completed.

2. The facility shall be connected to water, gas, sewer, and electric service, as necessary to the Project, complete and ready for use.

3. Mechanical, electrical, and low voltage work is complete, fixtures in place, connected, tested, commissioned, balanced, and training completed.

4. Electrical circuits scheduled in panels and disconnect switches labeled.

5. Painting and special finishes are complete, and all finished and decorative work shall be cleaned and have marks, dirt, and superfluous labels removed.

6. Doors are complete with hardware, properly adjusted, and tops and bottoms are sealed.

7. Project area is cleared of CONTRACTOR's equipment, debris, trash, broken glass, etc. Work is cleaned, free of stains, scratches or other foreign matter, and damaged or broken material is replaced. All portions of the Work shall be left in a neat and orderly condition. The final inspection will not be made until this is accomplished.

8. Upon receipt of CONTRACTOR's written notice that all of the Punch List items have been fully completed and the Work is ready for final inspection and acceptance, ARCHITECT shall inspect the

Work and shall submit to CONTRACTOR and DISTRICT a final inspection report noting the work, if any, required in order to complete the Work in accordance with the Contract Documents. Absent unusual circumstances, this report shall consist of the Punch List items not yet satisfactorily completed. Within ten (10) calendar days of such notification, the CONTRACTOR shall correct such defects or deficiencies.

9. Upon completion of the Work contained in the final inspection report, the CONTRACTOR shall so notify the DISTRICT and ARCHITECT, who shall again inspect such Work. If the DISTRICT/ARCHITECT finds the Work contained in such final inspection report acceptable under the Contract Documents and, therefore, the Work fully completed, it shall so notify CONTRACTOR, who shall then submit to the ARCHITECT its final Application for Payment.

10. Upon receipt and approval of such final Application for Payment, the ARCHITECT shall issue a final Certificate of Payment stating that to the best of its knowledge, information, and belief, and on the basis of its observations, inspections, and all other data accumulated or received by the ARCHITECT in connection with the Work, such Work has been completed in accordance with the Contract Documents. The DISTRICT may thereupon inspect such Work and shall either accept the Work as complete or notify the ARCHITECT and the CONTRACTOR in writing of reasons why the Work is not complete. Upon acceptance of the Work of the CONTRACTOR as fully complete (which, absent unusual circumstances, will occur when the Punch List items have been satisfactorily completed), the DISTRICT shall record a Notice of Completion (And Acceptance) with the County Recorder, and the CONTRACTOR shall, upon receipt of payment from DISTRICT, pay the amounts due Subcontractors and suppliers. Final acceptance by the DISTRICT shall not bind the DISTRICT to formal acceptance nor relieve the CONTRACTOR from the responsibility of completing or correcting any work.

N. Retention: The retention, less any amounts disputed by the DISTRICT or which the DISTRICT has the right to withhold, shall not be paid until after approval of the CONTRACTOR's final Certificate of Payment or ratification by the Board of Education and, after satisfaction of the conditions set forth above. DISTRICT may hold the retention for up to sixty (60) days after completion/acceptance of the Work, no interest shall be paid on any retention, or on any amounts withheld due to a failure of the CONTRACTOR to perform, in accordance with the terms and conditions of the Contract Documents, except as provided to the contrary in any Escrow Agreement and General Conditions between the DISTRICT and the CONTRACTOR pursuant to Public Contract Code section 22300. Additionally, if there is any punch list or other contract work remaining outstanding as of the date for payment of retention as described above, DISTRICT may, in its discretion, declare any such outstanding work to be disputed work as described in California Public Contract Code Section 7107 (c), place a reasonable value on such outstanding work, and withhold 150% of the disputed amount from the final payment pending completion of such work by CONTRACTOR.

O. Procedures for Application for Final Payment: The Application for Final Payment shall be accompanied by the same details as required under this Section relating to Applications for Progress Payments, and in addition, the following conditions must be fulfilled:

1. A full and final waiver or release of all Stop Payment Notices in connection with the Work shall be submitted by CONTRACTOR, including a release of Stop Payment Notice in recordable form, together with (to the extent permitted by law) a copy of the full and final waiver of all Stop Payment Notices or a Stop Payment Notice Release Bond from a surety acceptable to the DISTRICT as defined by the Contract Documents, including a release of Stop Payment Notice in recordable form, in connection with the Work obtained by Contractor from each person to receive a payment thereunder, which waivers of Stop Payment Notice rights shall be in a form as approved by DISTRICT and in compliance with California Civil Code Sections 8132 through 8138. Any stop payment notice release bond shall be executed by a California admitted, fiscally solvent surety, completely unaffiliated with

and separate from the surety on the payment and performance bonds, that does not have any assets pooled with the payment and performance bond sureties;

2. The CONTRACTOR shall have made, or caused to have been made, all corrections to the Work which are required to remedy any defects therein, to obtain compliance with the Contract Documents or any requirements of applicable codes and ordinances, or to fulfill any of the orders or directions of DISTRICT required under the Contract.

3. Each Subcontractor shall have delivered to the CONTRACTOR all written guarantees, warranties, applications, and bonds required by the Contract Documents for its portion of the Work.

4. The CONTRACTOR shall deliver to the ARCHITECT reproducible final Record Drawings and Annotated Specifications in hard copy paper and electronic formats showing the CONTRACTOR's Work "as built," with the CONTRACTOR's certification of the accuracy of the Record Drawings and Annotated Specifications, all guarantees, and operation and maintenance instructions for equipment and apparatus.

P. DISTRICT/ARCHITECT shall have issued a Final Certificate of Payment:

1. The CONTRACTOR shall have delivered to the DISTRICT all manuals and materials required by the Contract Documents.

2. The CONTRACTOR shall have removed, or caused to be removed, all waste materials and rubbish from and about the Site, as well as all tools, construction equipment, machinery, surplus material, scaffolding equipment, and any other similar materials of the CONTRACTOR or any subcontractor, shall have cleaned, or caused to be cleaned, all glass surfaces, and shall have left the Work broom-clean, except as otherwise provided in the Contract Documents.

3. CONTRACTOR shall provide extensive assistance in the utilization of any equipment or system such as initial start-up or testing, adjusting and balancing, preparation of operation and maintenance manuals and training personnel for operation and maintenance.

4. Acceptance of final payment shall constitute a waiver of claims by payees except for those previously identified in writing and identified by that payee as unsettled at the time of Final Application for Payment.

Q. Unless otherwise provided, on or before making its request for final payment of the undisputed amount due under the Contract, CONTRACTOR shall submit to DISTRICT, in writing, a summary of all claims for compensation under or arising out of this Contract which were timely filed. The acceptance by CONTRACTOR of the payment of the final amount shall constitute a waiver of all claims against DISTRICT under or arising out of this Contract, except those previously made, in a timely manner and in writing, and identified by CONTRACTOR as unsettled at the time of CONTRACTOR’S final request for payment.

R. The Project shall only be considered complete when the DISTRICT accepts the Project or it is otherwise deemed to be complete pursuant to applicable California Law. DISTRICT will note the date of completion on any Notice of Completion (And Acceptance) it causes to be recorded.Any such Notice of Completion (And Acceptance) may subsequently be ratified by the Board. DISTRICT shall have no obligation to accept completion of the Project until the entire work, including all punch list items have been completed in accordance with the Contract Documents to the satisfaction of the DISTRICT and all close-out documents, including, but not limited to, Record Drawings, Operation and Maintenance Manuals and DSA-required forms, and warranty documents have been provided to the DISTRICT, and staff training has been completed to the satisfaction of the DISTRICT. ARCHITECT and Project Inspector (IOR), and any other approved representative of the DISTRICT, shall determine when the Project is

complete. However, the DISTRICT, at its sole option, may accept completion of the contract and cause the Notice of Completion (And Acceptance) to be recorded when the entire work shall have been completed to the satisfaction of the DISTRICT, except for minor punch list or corrective items in DISTRICT's sole discretion.

01 29 76. 02 <u>Payments Withheld</u>

A. The DISTRICT may decide to withhold payment in whole, or in part, to the extent reasonably necessary to protect the DISTRICT if, in the DISTRICT's opinion the representations to the DISTRICT required by items 1 through 23 cannot be made by ARCHITECT. The DISTRICT may withhold payment, in whole, or in part, to such extent as may be necessary to protect the DISTRICT from loss because of:

1. Defective Work not remedied as provided in Section 01 45 00 entitled "Correction of Work,";

2. Stop Payment Notices filed, unless the CONTRACTOR at its sole expense provides a bond or other security satisfactory to the DISTRICT in the amount of at least one hundred twenty-five percent (125%) of the claim, in a form satisfactory to the DISTRICT, which protects the DISTRICT against such claim. Any stop payment notice release bond shall be executed by a California admitted, fiscally solvent surety, completely unaffiliated with and separate from the surety on the payment and performance bonds, that does not have any assets pooled with the payment and performance bond sureties;

3. Liquidated damages assessed against the CONTRACTOR;

4. Reasonable doubt that the Work can be completed for the unpaid balance of any Contract Sum or by the completion date;

5. Damage to the property or work of the DISTRICT, another contractor, or subcontractor;

6. Unsatisfactory prosecution of the Work by the CONTRACTOR;

7. Failure to store and properly secure materials or performance without properly processed shop drawings;

8. Failure of the CONTRACTOR to maintain, update and submit on a timely basis, proper and sufficient documentation required by the Contract Documents, including, without limitation, monthly progress schedules, shop drawings, submittal schedules, schedule of values, product data and samples, proposed product lists, executed change orders, and verified reports. The DISTRICT may, but is not required to, choose liquidated damages as a reasonable amount to be charged if the CONTRACTOR does not submit progress schedules or other such required submittals in accordance with the Contract Documents;

9. Failure of the CONTRACTOR to maintain record drawings and/or annotated specifications;

10. Erroneous estimates by the CONTRACTOR of the value of the Work performed, or other false statements in an Application for Payment;

11. Unauthorized deviations from the Contract Documents; or

12. Failure of the CONTRACTOR to prosecute the Work in a timely manner in compliance with established progress schedules and completion dates.

13. Subsequently discovered evidence or observations nullifying the whole or part of a previously issued Certificate for Payment;

14. Failure to pay subcontractors or materialmen;

15. Breach of any provision of the Contract Documents.

16. Costs and expenses of alternate educational facilities if the CONTRACTOR fails to complete the Project within the period of time required by the Contract Documents;

17. The cost of materials ordered by the DISTRICT pursuant to Section 01 62 00. 01 titled "Materials and Products".

18. Site clean-up as provided in Section 01 74 00. 02 entitled "Cleaning Up".

19. Payments to indemnify, defend, or hold harmless the DISTRICT.

20. Any payments due to the DISTRICT including but not limited to payments for failed tests, utilities and imperfections.

21. Extra services for the ARCHITECT and/or ENGINEER.

22. Extra services for the Inspector of Record including but not limited to re-inspection required due to CONTRACTOR'S failed tests or installation of unapproved or defective materials and CONTRACTOR's requests for inspection and CONTRACTORS failure to attend the inspection.

23. Any other reason in conformity with the provisions of this Contract including, but not limited, any failure to perform the terms and conditions of this Contract.

B. Written Reasons for Withholding: Payment. Upon request of the CONTRACTOR whose payment is deferred, the CONTRACTOR shall be given a written copy of DISTRICT's reasons for withholding payment.

C. Payment After Cure: When the grounds for declining approval are removed, payment shall be made for amounts withheld because of them on the next scheduled pay application. No interest shall be paid on any retainage or amounts withheld due to the failure of the CONTRACTOR to perform in accordance with the terms and conditions of the Contract Documents.

D. DISTRICT may apply the withheld amount(s) to the payment of the claims or obligations at its discretion. In so doing, DISTRICT shall be deemed the agent of CONTRACTOR and any payment made by DISTRICT shall be considered to be a payment made under this Contract by DISTRICT to CONTRACTOR, and DISTRICT shall not be liable to CONTRACTOR for the payments made in good faith. The payments may be made without prior judicial determination of the claim or obligations. DISTRICT shall submit to CONTRACTOR an accounting to the funds disbursed on behalf of CONTRACTOR.

01 29 76. 06 <u>Substitution of Securities</u>

A. Pursuant to the requirements of Public Contract Code Section 22300, upon CONTRACTOR'S request, DISTRICT will make payment to CONTRACTOR of any earned retention funds withheld from payments under this Contract if CONTRACTOR deposits with the DISTRICT or in escrow with a California or federally chartered bank acceptable with DISTRICT, securities eligible for investment pursuant to Government Code Section 16430 or bank or savings and loan certificates of deposit. Any escrow agreement shall be substantially similar to the form included with the Contract Documents and set forth in Public Contract Code 22300.

B. To minimize the expense caused by any substitution of securities, CONTRACTOR shall, prior to or at the time CONTRACTOR requests to substitute security, deposit sufficient security to cover the entire amount to be withheld pursuant to this Contract. Should the value of such substituted security at any time fall below the amount for which it was substituted, or any other amount which the DISTRICT determines to withhold, CONTRACTOR shall immediately and at CONTRACTOR'S expense deposit additional security qualifying under said Public Contract Code Section 22300 until the total security deposited is no less than equivalent to the amount subject to withholding under the Contract.

C. In the alternative, under Public Contract Code Section 22300, CONTRACTOR, at its own expense, may request that DISTRICT make payment of earned retention funds directly to the escrow agent. Also, at the expense of CONTRACTOR, CONTRACTOR may direct investment of the payments into securities, and CONTRACTOR shall receive the interest earned on the investment upon the same conditions as provided in subparagraph A, for securities deposited by CONTRACTOR. Upon satisfactory completion of this Contract, CONTRACTOR shall receive from the escrow agent all securities, interest and payments received by the escrow from DISTRICT, pursuant to the terms of Public Contract Code Section 22300. CONTRACTOR shall pay to each subcontractor, not later than twenty (20) days after receipt of payment, the respective amount of interest earned, net of costs attributed to retention withheld from each subcontractor, on the amount of retention withheld from each subcontractor on the amount withheld to insure performance of the CONTRACTOR.

D. If any provision of this Section is found, by a court of competent jurisdiction, to be illegal or unenforceable, such provision shall be deemed stricken and the remaining provisions of this Section shall remain in full force and effect.

01 29 93 <u>Completion of the Work and Close Out Procedures</u>

When CONTRACTOR considers that the Work, or a portion thereof which the DISTRICT agrees to accept separately, is complete, CONTRACTOR shall prepare and submit to the DISTRICT a comprehensive list of minor items to be completed or corrected (Punch List). CONTRACTOR and/or its Subcontractors shall proceed promptly to complete and correct items on the list. Failure to include an item on such list does not alter the responsibility of the CONTRACTOR to complete all Work in accordance with the Contract Documents. Upon receipt of the CONTRACTOR's list, DISTRICT and ARCHITECT will make an inspection to determine whether the Work, or designated portion thereof, is complete. If such inspection discloses any item, whether or not included on the CONTRACTOR's list, which is not completed in accordance with the requirements of the Contract Documents, CONTRACTOR shall, before DISTRICT's acceptance of the Project and issuance of the Notice of Completion (And Acceptance), complete or correct such item. CONTRACTOR shall then submit a request for an additional inspection by the DISTRICT/ARCHITECT to determine Completion/Acceptance. When the Work, or designated portion thereof (where DISTRICT agrees to consider approval of a separate portion of the overall Work for warranty purposes), is complete, DISTRICT will prepare a Notice of Completion (And Acceptance) which shall state the date of Completion, establish the responsibilities of the DISTRICT and CONTRACTOR for security, maintenance, heat, utilities, damage to the Work and insurance, and fix the time within which the CONTRACTOR shall finish all items on the list

accompanying the Notice of Completion (And Acceptance). Warranties required by the Contract Documents shall commence on the date of Completion/Acceptance of the Work, or designated portion thereof, unless otherwise provided in the Notice of Completion (And Acceptance).

01 31 19. 00 PROJECT MEETINGS

A. Pre-Construction Meeting: Before commencement of work, CONTRACTOR and all Subcontractors listed in bid documents of CONTRACTORS are required to attend a mandatory preconstruction meeting conducted by DISTRICT's representative and further attended by, but not limited to, ARCHITECT, ENGINEER, and IOR. The agenda will be reviewed in advance by the CONTRACTOR's project manager and DISTRICT's representative. This meeting should be attended by all project participants including owner, designer, and project managers, superintendents and foremen of the prime contractor and all major subcontractors and suppliers. Topics to be discussed will include, but not be limited to, introductions, exchange of organization charts, site issues, plans and rules for on-site conduct, permits, final construction documents, phasing and milestones, pre-mobilization requirements, submittals, mobilization plan, work constraints, relocation plans, safety plan, inspection plans, testing plans, owner-furnished items, drawing logs, project management system, daily reports, communication and correspondence, RFI process, change order process, dispute resolution process, and payment application process, operation and maintenance requirements, commissioning, punch list process, warranties, and as-built record drawings, Such proceedings may be electronically recorded.

B. Site Mobilization Meeting: CONTRACTOR shall hold a Site Mobilization Meeting with its subcontractors to review safety requirements, site-specific safety plan, assignment of safety-related responsibilities, pre-phase scheduling discussions, logistics and schedule of mobilization, confirmation that all necessary insurance policies are in place for construction, confirmation of necessary permissions, approvals, and other statutory requirements are in place and that all necessary planning conditions have been satisfied, review of subcontractor schedules and conditions for mobilization.

C. Progress Meetings: CONTRACTOR shall conduct weekly progress meetings for the duration of the contract. Attendees at these meetings include the CONTRACTOR's principal personnel, the ARCHITECT, and appropriate representatives of the DISTRICT, as required. These meetings address all project issues including safety, schedule, and quality. CONTRACTOR is responsible for ensuring that meeting minutes are standardized, recorded, scanned electronically, and saved in an electronic manner for ease of retrieval. The weekly agenda shall include, among other things, attendance sign-in, review of minutes from last meeting, action items from previous meeting, site observation reports, personnel and prosecution of the work, project inspection and testing log review, safety, report from CONTRACTOR, review of submittal / shop drawing log, review RFI log (new and old), review of corrective action log, change orders, progress schedule, prior week's performance, 2-week look-ahead, critical path schedule, commissioning schedule, special inspection schedule, special training, equipment add-delete modification log, application for payment, DISTRICT and ARCHITECT concerns, and next meeting confirmation.

D. Pre-Installation Meetings: Pre-installation meetings shall be held between CONTRACTOR and installing subcontractors prior to the start of their key installations to help ensure that all parties understand and are adequately prepared for the installation process. Such parties shall review the installation process, the materials and equipment needed, the project specifics, coordination with related work and work under separate contract, and any site specific concerns shall be discussed and dealt with. Such meetings should take place one to two weeks' prior the actual key installation, where possible. Other members of the project team shall be called upon to participate as necessary. The installing subcontractor's project manager and on-site supervisor shall participate in the pre-installation meeting, along with the CONTRACTOR's representative(s), representatives of firms whose activities directly affect or are affected by such work, and other project team members as applicable.

01 32 00 CONSTRUCTION PROGRESS DOCUMENTATION

01 32 16. 01 Progress Schedule

A. Preliminary Construction Schedule: Within five (5) calendar days after receiving the Notice to Proceed, CONTRACTOR shall prepare and submit to the DISTRICT and ARCHITECT a Preliminary Construction Schedule, in both written and electronic format, indicating, in graphic and tabular form, the estimated rate of progress and sequence of all Work required under the Contract Documents. The purpose of the Preliminary Construction Schedule is to assure adequate planning and execution of the Work so that it is completed within the Contract Time and to permit evaluation of the progress of the Work. The Preliminary Construction Schedule shall indicate the dates for commencement and completion of various portions of the Work, including, without limitation, the procurement and fabrication of major items, material and equipment forming a part of, or to be incorporated into, the Work as well as Site construction activities. The Preliminary Construction Schedule shall identify all major (critical) Submittals required, the portion(s) of the Work for which the identified Submittals relate to and the date upon which each Submittal required will be transmitted to the ARCHITECT for review (the "Submittal Schedule"). CONTRACTOR shall prepare the Preliminary Construction Schedule using Primavera, or comparable software in Critical Path Method format. If CONTRACTOR elects to use software other than Primavera, CONTRACTOR shall provide such software to the DISTRICT at CONTRACTOR's expense. These requirements shall not be deemed control over or assumption of construction means, methods or sequences, all of which remain the CONTRACTOR's responsibility. Further, these requirements shall not give rise to an increase in the Contract Time or the Contract Price. The CONTRACTOR may submit a Preliminary Construction Schedule depicting completion of the Work in a duration shorter than the Contract Time; provided that such Preliminary Construction Schedule shall not be a basis for adjustment to the Contract Price in the event that completion of the Work shall occur after the time depicted therein, nor shall such Preliminary Construction Schedule be the basis for any extension of the Contract Time, the CONTRACTOR's entitlement to any extension of the Contract Time shall be based upon the Contract Time and not on any shorter duration which may be depicted in the CONTRACTOR's Preliminary Construction Schedule. In the event any of the Construction Schedules required under this Section 01 32 16.01 incorporate therein "float" time, such float shall be deemed to belong to and owned by the DISTRICT. As used herein, "float time" shall be deemed to refer to the time between the earliest start date and the latest start date, or between the earliest finish date and the latest finish date of each activity shown on the Construction Schedule.

B. Review of Preliminary Construction Schedule: The DISTRICT and the ARCHITECT shall review the Preliminary Construction Schedule submitted by the CONTRACTOR pursuant subparagraph A above for conformity with the requirements of the Contract Documents. Within fifteen (15) days of the date of receipt of the Preliminary Construction Schedule, such Schedule will be returned to the CONTRACTOR with comments to the form or content thereof. Review of the Preliminary Construction Schedule and any comments thereto by the DISTRICT and/or the ARCHITECT shall not be deemed to be the assumption of construction means, methods or sequences by the DISTRICT or ARCHITECT, all of which remain the CONTRACTOR's obligations under the Contract Documents.

C. Cost Loaded Construction Schedule: Within ten (10) days of the DISTRICT's return of the Preliminary Construction Schedule to the CONTRACTOR pursuant to subparagraph B above, the CONTRACTOR shall prepare and submit the Cost Loaded Construction Schedule which incorporates therein the comments to the Preliminary Construction Schedule. Upon the CONTRACTOR's submittal of such Construction Schedule, the DISTRICT shall review the same for purposes of determining conformity with the requirements of the Contract Documents. Within fifteen (15) days of the receipt of the Construction Schedule, the DISTRICT will approve such Construction Schedule or will return the same to the CONTRACTOR with comments to the form or content. In the event there are comments to the form or content thereof, the CONTRACTOR shall within seven (7) days of receipt of such comments, revise

and resubmit the Construction Schedule incorporating therein such comments. Upon the DISTRICT's approval of the form and content of a Construction Schedule, the same shall be deemed the "approved construction schedule." The DISTRICT's approval of a Construction Schedule shall be for the sole and limited purpose of determining conformity with the requirements of the Contract Documents. By the approved construction schedule, the DISTRICT shall not be deemed to have exercised control over, or approval of, construction means, methods or sequences, all of which remain the responsibility and obligation of the CONTRACTOR in accordance with the terms of the Contract Documents. Further, the approved construction schedule shall not operate to limit or restrict any of CCONTRACTOR's obligations under the Contract Documents nor relieve the CONTRACTOR from the full, faithful and timely performance of such obligations in accordance with the terms of the Contract Documents. The activities, commencement and completion dates of activities, and the sequencing of activities depicted on the approved construction schedule shall not be modified or revised by the CONTRACTOR without the prior consent, or direction, of the DISTRICT. Updates to the approved construction schedule shall not be deemed revisions to the approved construction schedule. In the event that the approved construction schedule shall depict completion of the Work in a duration shorter than the Contract Time, the same shall not be a basis for an adjustment of the Contract Time or the Contract Price in the event that actual completion of the Work shall occur after such the time depicted in such approved construction schedule. In such event, the Contract Price shall not be subject to adjustment on account of any additional costs incurred by the CONTRACTOR to complete the Work prior to the Contract Time, as adjusted in accordance with the terms of the Contract Documents. Any adjustment of the Contract Time or the Contract Price shall be based upon the Contract Time set forth in the Contract Documents and not any shorter duration which may depicted in the approved construction schedule.

D. Revision to Approved Construction Schedule: In the event that the progress of the Work or the sequencing of the activities of the Work shall materially differ from that indicated in the approved construction schedule, as determined by the DISTRICT in its reasonable discretion and judgment, the DISTRICT may direct the CONTRACTOR to revise the approved construction schedule; within fifteen (15) days of the DISTRICT's direction, the CONTRACTOR shall prepare and submit a revised approved construction schedule, for review and approval by the DISTRICT. The CONTRACTOR may request consent of the DISTRICT to revise the approved construction schedule. Any such request shall be considered by the DISTRICT only if in writing setting forth the CONTRACTOR's proposed revision(s) to the approved construction schedule and the reason(s) therefor. The DISTRICT may consent to, or deny, any such request of the CONTRACTOR to revise the approved construction schedule in its reasonable discretion.

E. Updates to Approved Construction Schedule: The CONTRACTOR shall monitor and update the approved construction schedule on a monthly basis, or more frequently as required by the conditions or progress of the Work, or as may be requested by the DISTRICT. Proper and complete updating of the approved construction schedule shall be a condition precedent to the issuance of progress payments described in these General Requirements. The CONTRACTOR shall provide the DISTRICT with updated approved construction schedules indicating progress achieved and activities commenced or completed within the prior updated approved construction schedule. Updates to the approved construction schedule shall not include any revisions to the activities, commencement and completion dates of activities or the sequencing of activities depicted on the approved construction schedule, without the DISTRICT’s consent. Any revisions to the approved construction schedule made without the DISTRICT’s consent shall result in the DISTRICT's rejection of such update and CONTRACTOR shall, within seven (7) days of the DISTRICT's rejection of such update, submit to the ARCHITECT and the DISTRICT an updated approved construction schedule which does not incorporate any such revisions. The CONTRACTOR shall also submit, with its updates to the approved construction schedule, a narrative statement including a description of current and anticipated problem areas of the Work, logic and resource changes, delaying factors and their impact, and an explanation of corrective action taken or proposed by the CONTRACTOR. If the progress of the Work is behind the approved construction schedule, the CONTRACTOR shall indicate what measures will be taken to place the Work back on schedule. The DISTRICT may, from time to time, and in the DISTRICT's sole and exclusive discretion,

transmit to the CONTRACTOR's performance bond surety the approved construction schedule, any updates thereof, and the narrative statement described hereinabove. The DISTRICT's election to transmit, or not to transmit such information, to the CONTRACTORs performance bond surety shall not limit the CONTRACTOR's obligations under the Contract Documents.

F. Contractor Responsibility for Construction Schedule: The CONTRACTOR shall be responsible for the preparation, submittal and maintenance of the construction schedules required by the Contract Documents, and any failure of the CONTRACTOR to do so may be deemed by the DISTRICT as the CONTRACTOR's default in the performance of a material obligation under Contract Documents. Any and all costs or expenses required or incurred to prepare, submit, maintain, and update the construction schedules shall be solely that of the CONTRACTOR and no such cost or expense shall be charged to the DISTRICT. The Contract Price shall not be subject to adjustment on account of costs, fees or expenses incurred or associated with the CONTRACTOR's preparation, submittal, and maintenance or updating of the construction schedules. All schedule submittals shall include electronic discs for use by the DISTRICT in its analysis and approval of the schedule submittal.

G. The scheduling is necessary for the DISTRICT's adequate monitoring of the progress of the Project and shall be prepared in accordance with the time frame described in the Agreement. Time is of the essence in the performance of the Work. The DISTRICT may disapprove such a schedule and require modification to it if, in the opinion of the ARCHITECT or DISTRICT, adherence to the progress schedule will cause the Project not to be completed in accordance with the Contract. CONTACTOR shall adhere to any such modifications required by the DISTRICT.

H. CONTRACTOR shall exchange scheduling information with subcontractors and suppliers, CONTRACTOR shall order work, equipment and materials with sufficient lead time to avoid interruption of the Work/Project.

I. The CONTRACTOR shall submit to DISTRICT a monthly schedule with CONTRACTOR's pay application to reflect the actual sequence of the Work which shall be totally separate and apart from the original progress schedule. Failure to submit will result in rejection of pay application.

J. In the event the Work is delayed, the CONTRACTOR shall also, if requested by the ARCHITECT or DISTRICT, provide revised recovery schedule within ten (10) calendar days if, at any time, the ARCHITECT or DISTRICT consider the completion date to be in jeopardy. The recovery schedule shall be designed to show how the CONTRACTOR intends to accomplish the work to meet the original completion date. The form and method employed by the CONTRACTOR shall be the same as or the original progress schedule. The CONTRACTOR shall modify any portions of the schedule that become infeasible because of activities behind schedule or for any other valid reason. CONTRACTOR shall provide documents and justification for any schedule changes. An activity that cannot be completed by its original completion date shall be deemed to be behind schedule.

K. CONTRACTOR shall submit a revised schedule within ten (10) consecutive calendar days of CONTRACTOR's request for any extension of time. Failure to submit such schedule will result in CONTRACTOR waiving its right to obtain any extension of time.

L. If CONTRACTOR submits a revised schedule showing an earlier completion date for the Project, DISTRICT'S acceptance of this revised schedule SHALL NOT ENTITLE CONTRACTOR TO ANY DELAY CLAIM OR DISRUPTION CLAIM OR ACCELERATION CLAIM OR DAMAGES DUE TO ANY REVISED SCHEDULE, ACCELERATION TO MEET THE COMPLETION DEADLINE, OR ANY ADDITIONAL COMPENSATION FOR EARLY COMPLETION.

01 33 23 SUBMITTAL PROCEDURES

01 33 23. 00 Submittals and Samples

A. Sample Submissions Procedure: In case a considerable range of color, graining, texture, or other characteristics may be anticipated in finished products, a sufficient number of samples of the specified materials shall be furnished by the CONTRACTOR to indicate the full range of characteristics, which will be present in the finished products; and products delivered or erected without submittal and approval of full range samples shall be subject to rejection. Except for range samples, and unless otherwise called for in the various sections of the Specifications, samples shall be submitted in duplicate. All samples shall be marked, tagged, or otherwise properly identified with the name of the submitting party, the name of the Project, the purpose for which the samples are submitted, and the date and shall be accompanied by a letter of transmittal containing similar information, together with the Specification section number for identification of each item. Each tag or sticker shall have clear space for the review stamps of CONTRACTOR and ARCHITECT. CONTRACTOR shall furnish for approval, within thirty-five (35) calendar days following award of the Contract unless specified otherwise in specifications, all samples as required in the specifications together with catalogs and supporting data required by ARCHITECT. This provision shall not authorize any extension of time for performance of the Project. ARCHITECT shall review such samples, as to conformance with the design concept of the work and for compliance with Contract Documents, and approve or disapprove same within ten (10) working days from receipt of same.

Unless otherwise specified, sampling, preparation of samples and tests shall be in accordance with the latest standards of the American Society for Testing and Materials.

B. Labels and Instructions: Samples of materials, which are generally furnished in containers bearing the manufacturers' descriptive labels and printed application instructions, shall, if not submitted in standard containers, be supplied with such labels and application instructions.

C. ARCHITECT/ENGINEER's Review/Delays: Samples shall, upon demand of ARCHITECT or DISTRICT, be submitted for tests or examinations and considered before incorporation of same into the Work. CONTRACTOR shall be solely responsible for any delays due to samples not being submitted in time to allow for testing. Acceptance or rejection will be made in writing. All work by CONTRACTOR shall at least be equal to any approved samples in every respect. Samples which are of value after testing will remain the property of the CONTRACTOR.

D. The ARCHITECT/ENGINEER will review and, if appropriate, approve submissions and will return them to the CONTRACTOR with the ARCHITECT's stamp and signature applied thereto, indicating the appropriate action in compliance with the ARCHITECT's standard procedures.

E. Equipment Manuals: CONTRACTOR shall obtain and furnish three (3) complete sets of manuals containing the manufacturers' instructions for maintenance and operation of each item of equipment and apparatus furnished under the Contract Documents and any additional data specifically requested under the various sections of the Specifications for each division of the Work. The manuals shall be arranged in proper order, indexed, and placed in three-ring binders. At the completion of its Work, the CONTRACTOR shall certify, by endorsement thereon, that each of the manuals is complete, accurate, and covers all of its Work. Prior to submittal of CONTRACTOR's Application for Final Payment, and as a further condition to its approval by the ARCHITECT, each Subcontractor shall deliver the manuals, arranged in proper order, indexed, endorsed, and placed in three-ring binders, to the CONTRACTOR who shall assemble these manuals for all divisions of the Work, review them for completeness, and submit them to the DISTRICT through the ARCHITECT/ENGINEER.

F. DISTRICT's Property: All shop drawings and samples submitted shall become the DISTRICT's property.

01 33 23. 01 Shop Drawings

A. Shop Drawings: The term "shop drawings" as used herein means drawings, diagrams, schedules, and other data, which are prepared by CONTRACTOR, Subcontractors, manufacturers, suppliers, or distributors illustrating some portion of the Work, and includes: illustrations; fabrication, erection, layout and setting drawings; manufacturer's standard drawings; schedules; descriptive literature, instructions, catalogs, and brochures; performance and test data including charts; wiring and control diagrams; and all other drawings and descriptive data pertaining to materials, equipment, piping, duct and conduit systems, and methods of construction as may be required to show that the materials, equipment, or systems and their position conform to the requirements of the Contract Documents. The CONTRACTOR shall obtain and submit with the shop drawings all seismic and other calculations and all product data from equipment manufacturers. "Product data" as used herein are illustrations, standard schedules, performance charts, instructions, brochures, diagrams, and other information furnished by the CONTRACTOR to illustrate a material, product, or system for some portion of the Work. As used herein, the term "manufactured" applies to standard units usually mass-produced, and "fabricated" means items specifically assembled or made out of selected materials to meet individual design requirements. Shop drawings shall: establish the actual detail of all manufactured or fabricated items, indicate proper relation to adjoining work, amplify design details of mechanical and electrical systems and equipment in proper relation to physical spaces in the structure, and incorporate minor changes of design or construction to suit actual conditions.

B. Samples: The term "samples" as used herein are physical examples furnished by CONTRACTOR to illustrate materials, equipment, or quality and includes natural materials, fabricated items, equipment, devices, appliances, or parts thereof as called for in the Specifications, and any other samples as may be required by the ARCHITECT to determine whether the kind, quality, construction, finish, color, and other characteristics of the materials, etc., proposed by the CONTRACTOR conform to the required characteristics of the various parts of the Work. All Work shall be in accordance with the approved samples.

C. CONTRACTOR's Responsibility: CONTRACTOR shall obtain and shall submit to ARCHITECT all required shop drawings and samples in accordance with CONTRACTOR's schedule for submission of shop drawings and samples with such promptness as to cause no delay in its own Work or in that of any other contractor, Owner or subcontractor but in no event later than thirty-five (35) days after the execution of the Contract. No extensions of time will be granted to CONTRACTOR or any Subcontractor because of its failure to have shop drawings and samples submitted in accordance with the schedule. Each Subcontractor shall submit all shop drawings, samples, and manufacturer's descriptive data for the review of the DISTRICT, the CONTRACTOR, and the ARCHITECT through the CONTRACTOR. By submitting shop drawings, product data, and samples, the CONTRACTOR and submitting party (if other than CONTRACTOR) represent that they have determined and verified all materials, field measurements, field conditions, catalog numbers, related field construction criteria, and other relevant data in connection with each such submission, and that they have checked, verified, and coordinated the information contained within such submittals with the requirements of the Work and of the Contract Documents. At the time of submission, any deviation in the shop drawings, product data, or samples from the requirements of the Contract Documents shall be narratively described in a transmittal accompanying the submittal. However, submittals shall not be used as a means of requesting any substitutions. Review by DISTRICT and ARCHITECT shall not relieve the Contractor or any Subcontractor from their responsibility in preparing and submitting proper shop drawings in accordance with the Contract Documents. CONTRACTOR shall stamp, sign, and date each submittal indicating its representation that the submittal meets all of the requirements of the Contract Documents. Any submission, which in ARCHITECT's opinion is incomplete, contains numerous errors, or has been checked only superficially by CONTRACTOR, will be returned unreviewed by the ARCHITECT for resubmission by the CONTRACTOR.

D. Extent of Review: In reviewing shop drawings, the ARCHITECT will not verify dimensions and field conditions. The ARCHITECT will review and approve shop drawings, product data, and samples for aesthetics and for conformance with the design concept of the Work and the information given in the Contract Documents. The ARCHITECT's review shall neither be construed as a complete check nor relieve the CONTRACTOR, Subcontractor, manufacturer, fabricator, or supplier from responsibility for any deficiency that may exist or from any departures or deviations from the requirements of the Contract Documents unless the CONTRACTOR has, in writing, called the ARCHITECT's attention to the deviations at the time of submission and the ARCHITECT has given specific written approval. The ARCHITECT's review shall not relieve the CONTRACTOR or Subcontractors from responsibility for errors of any sort in shop drawings or schedules, for proper fitting of the Work, or from the necessity of furnishing any Work required by the Contract Documents, which may not be indicated on shop drawings when reviewed. CONTRACTOR and Subcontractors shall be solely responsible for determining any quantities, whether or not shown on the shop drawings.

E. Drawing Submission Procedure: All shop drawings must be properly identified with the name of the Project and dated, and each lot submitted must be accompanied by a letter of transmittal referring to the name of the Project and to the Specification section number for identification of each item clearly stating in narrative form, as well as "clouding" on the submissions, all qualifications, departures, or deviations from the Contract Documents, if any. Shop drawings, for each section of the Work, shall be numbered consecutively, and the numbering system shall be retained throughout all revisions. All Subcontractor submissions shall be made through the CONTRACTOR. Each drawing shall have a clear space for the stamps of ARCHITECT and CONTRACTOR. Only shop drawings required to be submitted by the Contract Documents shall be reviewed.

F. Copies Required: Each submittal shall include one (1) legible, reproducible sepia and five (5) legible paper copies and one (1) electronic copy of each drawing, including fabrication, erection, layout and setting drawings, and such other drawings as required under the various sections of the Specifications until final acceptance thereof is obtained. Subcontractor shall submit copies, in an amount as requested by the CONTRACTOR, of: manufacturers' descriptive data for materials, equipment, and fixtures, including catalog sheets showing dimensions, performance, characteristics, and capacities; wiring diagrams and controls; schedules; all seismic calculations and other calculations; and other pertinent information as required.

G. Corrections: The CONTRACTOR shall make any corrections required by ARCHITECT/ENGINEER and shall resubmit as required by ARCHITECT the required number of corrected copies of shop drawings or new samples until approved. CONTRACTOR shall direct specific attention in writing or on resubmitted shop drawings to revisions other than the corrections required by the ARCHITECT on previous submissions. Professional services required for more than one (1) re-review of required submittals of shop drawings, product data, or samples are subject to charge to the CONTRACTOR.

H. Approval Prior to Commencement of Work: No portion of the Work requiring a shop drawing or sample submission shall be commenced until the submission has been reviewed by DISTRICT and approved by ARCHITECT unless specifically directed in writing by the DISTRICT. All such portions of the Work shall be in accordance with approved shop drawings and samples.

CONTRACTOR shall check and verify all field measurements and shall promptly submit all shop or setting drawings, schedules and material lists required for the work of various trades, checked and approved by CONTRACTOR, so as to preclude any delay. ARCHITECT/ENGINEER shall check and approve or disapprove those schedules and drawings, only for conformance with the design concept of the Project and compliance with the information provided by this Contract, within 21 days. CONTRACTOR shall make any corrections required by the ARCHITECT/ENGINEER, file corrected copies with the ARCHITECT/ENGINEER and furnish other copies as

needed for construction. ARCHITECT/ENGINEER'S approval of the drawings or schedules shall not relieve CONTRACTOR of its responsibility for deviations from drawings or specifications unless CONTRACTOR has called ARCHITECT/ENGINEER'S attention to the deviations, in writing, at the time of submission and secured ARCHITECT/ENGINEER'S written approval. Nor shall it relieve CONTRACTOR from its responsibility for errors in shop drawings or schedules.

No portion of the work requiring submission of a shop drawing shall be commenced until the submittal has been acted upon by the ARCHITECT/ENGINEER. All such portions of the work shall be in accordance with the reviewed submittals.

THE CONTRACTOR SHALL HAVE NO CLAIM FOR DAMAGES OR EXTENSION OF TIME DUE TO ANY DELAY RESULTING FROM THE CONTRACTOR HAVING TO MAKE THE REQUIRED REVISIONS TO SHOP DRAWINGS UNLESS REVIEW BY THE ARCHITECT OF SAID DRAWINGS IS DELAYED BEYOND THE TIME PROVIDED HEREIN ABOVE AND THE CONTRACTOR CAN ESTABLISH THAT THE ARCHITECT'S DELAY, AS PART OF THE REVIEW PROCESS, ACTUALLY RESULTED IN A DELAY TO THE CONTRACTOR'S CONSTRUCTION SCHEDULE.

01 33 23. 13 COORDINATION OF WORK; COORDINATION OF DRAWINGS

A. CONTRACTOR shall be responsible to perform and shall perform the following:

1. Coordinate the Work according to provisions stated in the Contract Documents, including but not limited to the Contract General Conditions. CONTRACTOR shall not delegate responsibility for coordination to any subcontractor.

2. Anticipate the interrelationship of all subcontractors and their relationship with the total Work. Resolve differences or disputes between subcontractors and materials suppliers concerning coordination, interference, and extent of work between sections. The ARCHITECT is not required to coordinate work between sections and will not do so.

3. Coordinate Work under the Contract with work under separate contracts by DISTRICT.

4. Coordinate utility and building services shut-downs and closures of vehicular and pedestrian thoroughfares, including access to buildings and parking areas, to minimize disruption of DISTRICT activities.

5. Providing anchorage, blocking, joining and other detailing as required to provide a complete Project.

6. Coordinate this work with all associated Work in a manner that will ensure that all Work will be accomplished as rapidly as the progress of the Project will permit and so that no work will be delayed for want of associated work.

7. Construction Interfacing and Coordination: Layout, scheduling and sequencing of Work shall be solely the CONTRACTOR's responsibility. CONTRACTOR shall verify, confirm and coordinate field measurements so that new construction correctly and accurately interfaces with conditions existing prior to construction. CONTRACTOR shall bring together the various parts, components, systems and assemblies as required for the correct interfacing and integration of all elements of Work. CONTRACTOR shall coordinate Work to correctly and accurately connect abutting, adjoining, overlapping and related elements, including work under separate contracts by DISTRICT, utility agencies and companies.

8. Coordinate matching finish, texture, color, and related attributes for the new Work relating to existing components in the Project, where applicable.

9. Coordinate schedules, submittals, and work of the various trades to ensure efficient and orderly sequence of installation of construction, with provisions for accommodating items to be installed later. Coordinate the Work with respect to the requirements of the Project Specifications, Drawings, and other Contract Documents. Work shown on any drawing or required by any specification is required by the Contract irrespective of the failure of the other to require it, and irrespective of trade subdivision. CONTRACTOR shall require each trade subcontractor and any custom material supplier to review all other subdivisions of the documents for related work and shall coordinate the subcontracts and/or purchase orders, as applicable, accordingly.

10. Require all parties involved in the performance of the Work to cooperate in the overall coordination and scheduling of the Work under the direction of the CONTRACTOR. Each party, when requested to do so, shall furnish information concerning its portion of the Work, and shall respond promptly and reasonably to the decisions and requests of persons designated with coordination, supervisory, administrative, or similar authority.

11. Require that coordinated layout shop drawings show actual architectural and structural constraints and site conditions.

B. Requirements Relating to Coordination Drawings for Installation of Utility Systems and Equipment Room systems:

1. CONTRACTOR shall prepare coordination drawings for all Work on the site, in above-ceiling spaces, utility chases and utility rooms.

2. The Contract Documents are generally diagrammatic in nature with respect to mechanical, electrical, fire protection, low voltage, building automation and data systems. Not every necessary bend, offset, elevation, and direction change is shown in the Contract Documents. The Contract Documents represent that these systems will fit in the spaces allotted; however, it is the responsibility of the CONTRACTOR to assign space priorities and lay out and route the systems and the systems components so they will fit efficiently in the allotted spaces and allow for convenient and code-conforming access to all valves, dampers, actuators, and other devices as required by the Contract Documents and/or applicable Code or Law.

3. The layout of utility rooms is also diagrammatic in nature. The Contract Documents represent that that equipment identified to be installed in utility rooms will fit in the spaces allotted. However, because the CONTRACTOR must submit and provide for equipment to be installed in utility rooms, it is the CONTRACTOR's responsibility to lay-out the equipment room such that all equipment will fit appropriately, with all required clearances and within all required tolerances.

4. The CONTRACTOR must examine all of the Contract drawings, including but not limited to the architectural drawings, for ceiling space dimensions, and structural for beam/column obstructions, and make allowances in the CONTRACTOR's planned coordination efforts, work sequence, equipment layout, junction boxes, and routing of the systems and components and all connections thereto.

5. Utilize spaces efficiently to maximize accessibility for other installations, for maintenance, and for repairs.

6. Conceal pipes, ducts, and wiring in finished areas, unless otherwise indicated; coordinate locations of fixtures and outlets with finish elements.

7. Size ductwork, mechanical pipe, plumbing, electrical, and sprinkler system components required by the Contract Documents, including but not limited to the Drawings and Specifications. Downsizing of Mechanical/Electrical, Plumbing/Sprinkler (M/E/P/S) systems is not permitted without the express written direction and consent and appropriate Change Order documentation approved and signed by the ARCHITECT and DISTRICT.

8. Coordination drawings shall clearly show, at minimum, the following:
   a. Coordinated layout shop drawings shall be scaled and dimensionally accurate and detailed, giving complete dimensions of all locations, elevations, tolerances, and clearances.

   b. Show exact locations of the following: ductwork, piping, including fire protection systems, valves and piping specialties, including all air vents and drains, dampers, actuators, access doors, control and electrical panels, adjustable and variable frequency controllers, motor control centers, starters, and transformers, disconnect switches, elevator equipment, electrical cable trays, bus ducts, and main conduits, and all DISTRICT-furnished, CONTRACTOR-installed equipment.

   c. The location, for maintenance and repair purposes, of all above-ceiling valves, fire dampers, actuators, control devices, meters and gauges, and cooling/heating coils, and the access hatches (in "hard lid) ceilings that provide a means of access to these devices. These devices and appurtenances must be located such that a worker has unimpeded access to perform maintenance, repair or replacement. "Unimpeded access" means that a worker can access the device from a location immediately below the device, via the removal of a lay-in ceiling tile, or an access door/panel. All above-ceiling valves, fire dampers, actuators, control devices and cooling/heating coils shall be located such that there are no interferences from systems furniture, or above-ceiling mechanical electrical, plumbing, or sprinkler systems. The Coordination drawings must clearly depict and represent this accessibility.

   d. How equipment, controls, valves, actuators, power panels, relay panels, and disconnects will fit in equipment room(s) space, and still comply with code, and manufacturer's maintenance requirements, with respect to clearance and tolerances.

01 35 00 SPECIAL PROCEDURES

01 35 13. 02 <u>Campus Disruption Due to Noise, Dust Control, or Other Operations</u>

If school is in session at any point during the progress of the project, and in the DISTRICT's reasonable discretion, the noise and/or other disruptions from such Work disrupts or disturbs the students or faculty or the normal operation of the school, at the DISTRICT's request, the CONTRACTOR shall schedule the performance of all such Work around normal school hours or make other arrangements so that the work does not cause such disruption or disturbance. In no event shall CONTRACTOR have a right to receive additional compensation or an extension to the Contract Time as a result of any such rescheduling or the making of such other arrangements. Any temporary power, water, or other utility or service cutoffs must be pre-approved by DISTRICT or its authorized representative. The CONTRACTOR shall be responsible for complying with the requirements of the city and county having jurisdiction with regard to noise ordinances governing construction sites and activities. Construction equipment noise is subject to the control of the Environmental Protection Agency's Noise Control Program (Code of Federal Regulations, Title 40, Part 204). The CONTRACTOR shall be solely responsible for maintaining all areas of the Work free from all materials and products that by becoming airborne may cause respiratory inconveniences to DISTRICT students and personnel. Damages and/or any liability derived from the CONTRACTOR's failure to

comply with these requirements shall be the sole cost of the CONTRACTOR, including all penalties incurred for violations of local, state and/or federal regulations.

01 35 16 Occupancy, partial Occupancy, or Use

DISTRICT reserves the right to occupy or use any portion or all of the Project at any time before completion. Unless otherwise agreed upon in writing, any occupancy, use, or partial occupancy shall not constitute final acceptance of any part of the work covered by this Contract, nor shall any occupancy or use extend the date specified for completion of the Project or otherwise entitle the CONTRACTOR to any additional compensation. Similarly, beneficial occupancy of any portion or all of the Project does not commence any warranty period nor shall it entitle CONTRACTOR to any additional compensation whatsoever because of such occupancy or use. DISTRICT and CONTRACTOR shall agree in writing to the responsibilities assigned to each of them for payments, security, maintenance, heat, utilities, damage to the Work, insurance, the period for correction of the Work, and the commencement of warranties required by the Contract Documents for the portion occupied or used. When CONTRACTOR considers a portion complete, CONTRACTOR shall prepare and submit a Punch List to the DISTRICT as provided IN THESE General Requirements. If CONTRACTOR and DISTRICT are unable to agree upon the matters set forth above, DISTRICT may nevertheless use or occupy any portion of the Work, with the responsibility for such matters subject to resolution in accordance with the Contract Documents. Immediately prior to such partial occupancy or use, DISTRICT, CONTRACTOR, and ARCHITECT/ENGINEER shall jointly inspect the area to be occupied or portion of the Work to be used in order to determine and record the condition of the Work. DISTRICT's use or occupancy of the Work or portions thereof pursuant to the proceeding shall not be deemed "completion" of the Work as that term is used in Public Contract Code Section 7107.

01 35 23 Necessary Safeguards

As required by conditions and progress of work, CONTRACTOR shall erect and properly maintain at all times all necessary safeguards, signs, barriers, lights, and watchmen for protection of the site, workers, students, staff, and the public, and shall post danger signs warning against hazards created in the course of construction. CONTRACTOR shall designate a responsible member of its organization whose duty shall be the prevention of accidents. The name and position of the person designated shall be reported to DISTRICT by CONTRACTOR.

01 35 29 Health, Safety & Emergency Response Procedures

Reserved.

01 41 00 REGULATORY REQUIREMENTS

01 41 00. 01 Code Compliance

All materials and workmanship shall conform to all legal requirements applicable to the Project including, but not necessarily limited to the 2013 edition Title 24 of the California Code of Regulations, and the requirements of the Division of the State Architect, CONTRACTOR shall keep a copy of Title 24 of the California Code of Regulations on the job at all times. In addition, all work and material shall be in full accordance with the latest Rules and Regulations of the State Fire Marshal, National Board of Fire Underwriters, California Electric Code, Safety Orders of Division of Industrial Safety, California Plumbing Code, Title 24 of the California Code of Regulations and other Applicable Laws and regulations. Such laws and regulations shall be considered a part of these specifications as if set forth herein in full and all work hereunder shall be executed in accordance therewith. Nothing in these plans or specifications is to be construed to permit work not conforming to all requirements of law. CONTRACTOR shall perform its duties in accordance with all legal requirements including, but not limited to, Title 24 of the California Code of Regulations.

01 41 13. 00 Compliance With DTSC Guidelines – Imported Soils

If the Project requires the use of imported soils, CONTRACTOR, shall be responsible to use imported material that is free of any hazardous and/or toxic substance or material of any nature or type as defined in accordance with California Law, California Health and Safety Code and the guidelines of the Department of Toxic Substances Control ("DTSC"). CONTRACTOR must notify the DISTRICT of the source of material with adequate notice to allow analysis and testing and comply with all applicable regulations. The DISTRICT reserves the right to reject any imported material that has come from agricultural or commercial land uses.

01 41 16. 00 Laws and Regulations

CONTRACTOR shall give all notices and comply with all ordinances, rules and regulations, and Applicable Laws, relating to the work required by this Contract. If CONTRACTOR observes that the drawings and specifications are in conflict, CONTRACTOR shall promptly notify ARCHITECT/ENGINEER in writing and any changes deemed necessary by the ARCHITECT/ENGINEER shall be made as provided in the Contract for changes in work. If CONTRACTOR performs any work which he knows, or through the exercise of reasonable care should have known to be contrary to any Applicable Laws, ordinances, rules or regulations and fails to notify ARCHITECT/ENGINEER, CONTRACTOR shall bear all costs arising from the violations.

01 41 26. 00 Permits and Licenses

Permits, licenses, and certificates necessary for prosecution of the Work shall be secured and paid for by CONTRACTOR, unless otherwise specified. All such permits, licenses and certificates shall be delivered to the ARCHITECT before demand is made for final payment. CONTRACTOR shall, and shall likewise require that all subcontractors maintain contractor licenses in effect as required by law during the term of the Project.

01 45 00. 00 Correction of Work

A. CONTRACTOR shall promptly remove from the premises all work identified by DISTRICT or ARCHITECT/ENGINEER as failing to conform to this Contract, whether incorporated or not. CONTRACTOR shall promptly replace and repair its own work to comply with this Contract without additional expense to DISTRICT and shall bear the expense of making good all work of other contractors destroyed or damaged by that removal or replacement, including compensation for the ARCHITECT/ENGINEER's additional services.

B. If CONTRACTOR does not remove work within a reasonable time following written notification, DISTRICT may remove and store the material at CONTRACTOR's expense. If CONTRACTOR does not pay the expenses of removal within 10 days, DISTRICT may sell the materials at auction or private sale, upon 10 days' written notice and shall account for any net proceeds after deducting all costs and expenses that should have been borne by CONTRACTOR.

C. CONTRACTOR shall promptly install, complete, or correct work that is not in accordance with the Contract Documents within ten (10) days of written notice, or an equitable deduction of Contract price may be enforced by the DISTRICT. If CONTRACTOR defaults or neglects to carry out the Work in accordance with the Contract Documents or fails to perform any provision thereof, DISTRICT may, after ten (10) days written notice to the CONTRACTOR and without prejudice to any other remedy it may have, make good such deficiencies.

D. The DISTRICT shall adjust the total Contract price by reducing the amount thereof by the cost of making good such deficiencies. If DISTRICT deems it inexpedient to correct work not done in accordance with the Contract Documents, and equitable reduction in the Contract price shall be made.

01 45 23. 01 District's Inspector ("IOR")

A. The DISTRICT will provide one or more inspectors to provide competent and adequate inspection during normal working periods. The project inspector(s) shall be employed by the DISTRICT subject to approval by the Division of

the State Architect. Inspector and inspection of the Project shall be in accordance with all applicable provisions of law including, but not necessarily limited to, Title 24 of the California Code of Regulations. Special inspections shall be in accordance with all applicable provisions of law including, but not necessarily limited to those contained in Title 24 of the California Code of Regulations.

B. The Inspector shall have free access to any or all parts of the Project at any time. CONTRACTOR shall furnish the Inspector reasonable opportunities for obtaining information necessary to keep the Inspector fully informed regarding progress and manner of Work and character of materials. Inspection of the Work shall not relieve CONTRACTOR from any obligation to fulfill this Contract. The Inspector and ARCHITECT/ENGINEER shall have authority to reject work whenever the provisions of this Contract are not being complied with. In addition, the Inspector may stop any work which poses a probable risk of harm to persons or property. CONTRACTOR shall instruct its employees accordingly.

01 45 23. 02 <u>Tests and Inspections</u>

A. If in this Contract, any Applicable Laws, DISTRICT instructions, ordinances, or any public authority require any work to be specifically tested or approved, CONTRACTOR shall give notice of its readiness for observation or inspection at least two workdays prior to being tested or covered up. If inspection is required by parties other than DISTRICT, CONTRACTOR shall inform DISTRICT of the date fixed for the inspection. Required certificates of inspection shall be secured by CONTRACTOR. Observations by DISTRICT shall be promptly made and where practicable, at the source of supply. If any work is covered up without approval or consent of DISTRICT, if required by DISTRICT, it must be uncovered for examination and satisfactorily reconstructed at CONTRACTOR'S expense in compliance with this Contract. The cost of testing any materials which are not in compliance with the Contract shall be paid for by DISTRICT and charged back to CONTRACTOR. Other costs for tests and inspection of materials shall be paid by DISTRICT unless otherwise provided in this Contract. CONTRACTOR shall pay for all tests and inspections under any of the following conditions: (i) when such costs are stipulated in the provisions of the Contract Documents to be borne by the CONTRACTOR; (ii) when a material is tested or inspected and fails to meet the requirements of the Specifications and/or Drawings; or (iii) when the source of the material is changed after the original test or inspection has been made or approved.

B. Where the inspection and testing will be conducted by an independent laboratory or agency, the materials or samples of materials to be tested shall be selected by the laboratory or agency, or DISTRICT'S representative and not by CONTRACTOR.

C. CONTRACTOR shall notify DISTRICT a sufficient time in advance of the manufacture of materials to be supplied to him under this Contract, which must by the terms of this Contract be tested, in order that DISTRICT may arrange for testing at the source of supply. Any materials shipped by CONTRACTOR from the source of supply prior to having satisfactorily passed testing inspection, or prior to receipt of notice from the representative that the testing and inspection will not be required, shall not be incorporated in the Work without the prior approval of DISTRICT and subsequent testing and inspection. Time is of the essence with respect to this Contract. Tests or inspections required and conducted pursuant to the Contract Documents shall be made or arranged by CONTRACTOR to avoid delay in the progress of the Work.

D. At any time re-examination of questioned work, including warranty work, may be ordered by DISTRICT. If required, work must be uncovered by CONTRACTOR. If the work is determined to be in accordance with this Contract, DISTRICT shall pay all associated costs of re-examination and replacement. If the work is not in accordance with this Contract, CONTRACTOR shall pay all associated costs for re-examination and replacement. Where required DSA testing of the work identifies a failure rate of ten percent (10%) or greater for any system, scope of work, installation or subtrade that has been specifically investigated, DISTRICT may, at its sole discretion, order

that all such similar systems, installations, scopes of work or subtrade work used in connection with the Project be tested, and the cost to test all such work shall be paid by the CONTRACTOR.

E. Tests and inspections shall otherwise comply with all applicable provisions of law including, but not necessarily limited to, Title 24 of the California Code of Regulations. Title 24, Part1, Section 4-335 requires the tests of materials for construction projects under the jurisdiction of the DIVISION OF THE STATE ARCHITECT be performed by Laboratory Evaluation and Acceptance (LEA) program testing facilities.

F. In the event of a dispute of questioned work, the DISTRICT may order additional investigative testing or inspection to determine compliance to contract specifications. If the work is determined to be in accordance with this Contract, DISTRICT shall pay the costs of investigative testing or inspection and replacement. If the work is not in accordance with this Contract, CONTRACTOR shall pay all associated costs.

G. Required certificates of testing, inspection or approval shall, unless otherwise required by the Contract Documents, be secured by the CONTRACTOR and promptly delivered to the ARCHITECT. If a material is not required to be tested, the ARCHITECT, Inspector of Record, or the DISTRICT may require CONTRACTOR to furnish a certificate bearing the official and legal signature of the supplier with each delivery of such material, which certificate shall state that the material complies with the Specifications.

01 45 23. 33 <u>Code Required Special Inspections</u>

Reserved

01 45 23. 45 <u>Inspection by District Personnel</u>

Reserved

01 51 00. 01 <u>Utilities</u>

A. For modernization projects: Utilities including electricity, water and gas used on the Project will be furnished by DISTRICT. Telephone service may be furnished by the District, however, long distance calls will be back charged to the CONTRACTOR.

B. If this Contract is for an addition (new construction) to an existing facility, CONTRACTOR shall furnish and install necessary temporary distribution systems, including meters for all utilities including but not limited to electricity, water, gas and telephone service necessary to perform the work. Upon completion of the work, CONTRACTOR shall remove all temporary systems.

01 52 19. 01 <u>Sanitary Facilities</u>

CONTRACTOR shall provide temporary, sanitary toilet facilities, as required by law and additional facilities as directed by the inspector for the use of all workers. The facilities shall be maintained in a sanitary condition and shall be left at the site until removal is directed by the inspector. Use of toilet facilities contained in the Project under construction shall not be permitted except with the approval of the DISTRICT.

01 55 19. 01 <u>Temporary Parking Areas</u>

Reserved.

01 55 19. 02 <u>District's Inspector ("IOR") Private Office</u>

Within seven days after notice to proceed has been received, the CONTRACTOR shall provide the project Inspector with a "private office," which shall be a minimum of 8' x 12'. The room shall be equipped with a window, door with lock, wood floor, two ceiling lights, heating and cooling unit, standard 30" x 60" desk with drawers and file drawer,

110-volt outlet, one plan table (36" x 80" x 39" high, sloped up 3"), one 30" high stool, one desk chair, and one 12" x 28" wall shelf.

01 55 26 Traffic Control

Reserved.

01 55 29 Staging Areas

Reserved.

01 56 26 Temporary Fencing

Reserved.

01 56 29 Protective Walkways

Reserved.

01 56 39 Temporary Tree and Plant Protection

Reserved.

01 57 23 Storm Water Pollution Prevention Plan (SWPPP)

Storm Water Pollution Plan is only applicable if the "Notice to Bidders" section identifies this project as subject to these requirements or incorporated by addenda.

COMPLIANCE WITH STATE STORM WATER PERMIT FOR CONSTRUCTION:

A. CONTRACTOR shall comply with all conditions of the State Water Resources Control Board (State Water Board) National Pollutant Discharge Elimination System General Permit for Waste Discharge Requirements for Discharges of Storm Water Runoff Associated with Construction Activity (the "Permit") for all construction activity which results in the disturbance of in excess of one (1) acre of total land area or which is part of a larger common area of development or sale. It shall be CONTRACTOR's responsibility to evaluate the cost of compliance with the SWPPP prior to entering into the Contract for the Project and providing the Bid Price. CONTRACTOR shall comply with all requirements of the State Water Resources Control Board. CONTRACTOR shall include all costs of compliance with specified requirements in the Bid Price.

B. CONTRACTOR shall be responsible for implementing and complying with the provisions of the Permit and the SWPPP, including the standard provisions, monitoring and reporting requirements as required by Permit. CONTRACTOR shall provide copies of all reports and monitoring information to DISTRICT, and appropriate regulatory agencies.

C. CONTRACTOR shall comply with the lawful requirements of any applicable municipality, county, drainage district, and other local agencies regarding discharges of storm water to separate storm drain system or other watercourses under their jurisdiction, including applicable requirements in municipal storm water management programs.

D. Failure to comply with the Permit is a violation of federal and state law. CONTRACTOR hereby agrees to indemnify, defend and hold harmless DISTRICT, its officers, agents, and employees from and against any and all claims, demands, losses or liabilities of any kind or nature which DISTRICT, its officers, agents, and employees may sustain or incur for noncompliance with the Permit arising out of or in connection with the Project, except for liability resulting from the negligence or willful misconduct of DISTRICT, its officers, agents or employees. DISTRICT may

seek damages from CONTRACTOR for delay in completing the Project in accordance herewith, including damage caused by CONTRACTOR's failure to comply with Permit requirements.

CONTRACTOR shall familiarize their self and adhere to the SWPPP Specification Section below:

PART 1 - GENERAL

1.01 SUMMARY

A. This Section includes the following:

1. Provide all material, labor and services necessary to implement the Storm Water Pollution Prevention Plan (SWPPP).
2. Provide all material, labor, equipment and services necessary to comply with the conditions of the Construction General Permit (CGP) No. 2009-0009-DWQ.
3. Implement the Best Management Practices (BMP) contained within the SWPPP or implement other practices deemed necessary by the CONTRACTOR/Qualified SWPPP Practitioner (QSP) to better accomplish the intent of controlling the quality of runoff water from the Project Site.
4. Submit to the Owner/LRP all reports required for the Annual Report prior to September 1 of each year.
5. All Contract requirements in Division 00 and 01.

B. This Section does not include:

1. The Owner's Qualified SWPPP Developer (QSD) will prepare the SWPPP.
2. A Notice of Intent (NOI) to be covered by the CGP will be electronically filed by the Owner/Legally Responsible Person (LRP) with the State Water Resources Control Board (SWRCB). The Owner/LRP will pay the NOI fee and annual fees thereafter when applicable.
3. If applicable, an Erosivity Waiver will be electronically filed by the Owner/LRP with the SWRCB. The Owner/LRP will pay the Erosivity Waiver fee.
4. The Annual Report will be electronically filed by the Owner/LRP with the SWRCB by September 1 of each year.
5. A Notice of Termination (NOT) to terminate the CGP coverage will be electronically filed by the Owner/LRP with the SWRCB at the end of the project upon final stabilization as determined by the owner's QSD.

C. Acronyms:

1. BMP Best Management Practices
2. CARB California Air Resources Board
3. CGP Construction General Permit Order No. 2009-0009-DWQ
4. CSMP Construction Site Monitoring Program
5. EPA Environmental Protection Agency
6. FMFCD Fresno Metropolitan Flood Control District
7. NOI Notice of Intent
8. NOT Notice of Termination
9. NPDES National Pollution Discharge Elimination System
10. QSD Qualified SWPPP Developer
11. QSP Qualified SWPPP Practitioner
12. SJVAPCD San Joaquin Valley Air Pollution Control District
13. SWPPP Storm Water Pollution Prevention Plan

14. SWRCB State Water Resources Control Board
15. RWQCB Regional Water Quality Control Board

1.02 RELATED SECTIONS

A. Section 31 11 00 – Site Clearing
B. Section 31 20 00 – Earthwork
C. Section 33 41 00 – Storm Drainage

1.03 SUBMITTALS

A. Submit the following in accordance with Section 01 30 00:
   1. Construction schedule to be included in the SWPPP.
   2. List of subcontractor's to be included in the SWPPP.
   3. Addenda to the SWPPP.
   4. Inspection, training, and testing reports required by the Construction Site Monitoring Program (CSMP) in the SWPPP must be delivered to the Owner/LRP prior to September 1 of each year.

1.04 QUALITY ASSURANCE

A. SWPPP Certification Requirements:
   1. Qualified SWPPP Developer (QSD)
      a. The SWPPP shall be written, amended, and certified by a QSD. The SWPPP shall contain the QSD's name, certification number, and telephone number.
   2. Qualified SWPPP Practitioner (QSP)
      a. The SWPPP shall be implemented by a QSP. The SWPPP shall contain the QSP's name, certification number, and telephone number. The QSP is responsible for implementing the BMPs and CSMP as described within the SWPPP.

B. Regulatory Requirements:
   1. Prepare and implement the SWPPP in accordance the following:
      a. CARB Materials and equipment used for this Project shall comply with the current applicable regulations of the California Air Resources Board and the EPA.
      b. EPA Environmental Protection Agency.
      c. FMFCD Fresno Metropolitan Flood Control District
      d. SJVAPCD San Joaquin Valley Air Pollution Control District.
      e. SWRCB State Water Resources Control Board.
      f. RWQCB Regional Water Quality Control Board.

PART 2 - PRODUCTS

2.01 SOURCE QUALITY CONTROL

A. SWPPP:
   1. The SWPPP shall be prepared in accordance with the guidelines contained in the CGP issued by the SWRCB under the National Pollution Discharge Elimination System (NPDES) permit program of the EPA.
   2. The intent of the CGP is to protect the quality of receiving waters of the United States by limiting the quantity of pollutants in rainfall runoff from construction sites of one acre or more in area. In order to accomplish this goal, each construction project is required to prepare a SWPPP that will govern construction activities to lessen the probability that pollutants will be present in rainfall runoff from their site.

3. This site will be covered by the CGP by the time construction begins.
    a. All construction activity must comply with the conditions of the CGP.
    b. A NOI to be covered by the CGP will be filed by the Owner/LRP with the SWRCB and the fees will be paid by the Owner/LRP.
    c. Copies of the NOI will be provided to the CONTRACTOR to place in the appropriate Appendix of the SWPPP when the NOI is available.
4. The BMPs contained in the SWPPP will meet the intent of the CGP.
    a. The Owner does not have any responsibility for selecting or implementing the BMPs proposed by the CONTRACTOR and QSP to adequately control the quality of runoff from the site.
    b. The CONTRACTOR and QSP must provide, implement, and carry out the BMPs that comply with the CGP regardless of the BMPs contained in the SWPPP.
    c. The CONTRACTOR and QSP shall bear full responsibility for reviewing the proposed BMPs, ascertaining their ability to provide adequate controls, and implementing the BMPs or implementing others deemed by the CONTRACTOR and QSP to better accomplish the intent of controlling the quality of runoff water from the project site.
5. Fresno Metropolitan Flood Control District (FMFCD)
    a. FMFCD is charged with the responsibility to monitor the quality of runoff received by their storm drain system. FMFCD is the not the primary enforcement agency responsible for compliance with the NDPES permit. However, FMFCD can provide notice to the SWRCB that a violation is occurring and request that the SWRCB begin enforcement proceedings.

PART 3 - EXECUTION

3.01 APPLICATION

A. General Requirements:

1. The CONTRACTOR shall comply with the conditions of the CGP. The CGP is available at the following website: www.waterboards.ca.gov/water_issues/programs/stormwater/constpermits.shtml
2. The SWPPP is an aid to the CONTRACTOR in complying with the CGP.
3. Under the terms of this Contract, the CONTRACTOR is the Operator/Discharger of the Project Site. It is the CONTRACTOR's and QSP's responsibility to faithfully and fully implement the BMPs contained in the SWPPP, and other BMPs as required to effectively control the quality of runoff water from the project site.
4. The CONTRACTOR shall fully and completely carry out all provisions of the SWPPP and insure that all of the CONTRACTOR's forces, including sub-contractors, on the site do the same. The CONTRACTOR shall assume full responsibility for the implementation, maintenance and execution of the SWPPP for the life of this project. The CONTRACTOR shall be fully liable for penalties, fines, and clean-up costs resulting from the failure of the CONTRACTOR's personnel or subcontractor's personnel to comply with the provisions of the SWPPP, and hold the Owner/LRP harmless from the CONTRACTOR's failure to implement the SWPPP as required by the SWRCB, RWQCB, CGP, and the local authority having jurisdiction.
5. The CONTRACTOR shall be fully aware of the requirements for the full execution of the SWPPP which are contained in the previously mentioned regulations, the requirements of these specifications for implementing, maintaining, and enforcing the provisions of the SWPPP and the impact that the SWPPP will have on the operation, prosecution and cost of the work. A submittal of a bid on this project will be considered as prima facie evidence that the Contractor fully comprehends these requirements and impacts and has fully allowed for their effect on this project, both in time and cost.
6. The Owner/LRP's QSD shall prepare the Risk Determination, site map, and SWPPP for all

construction activities that will occur on the project site. Prior to construction, the CONTRACTOR shall review the provided site map, mark any necessary changes due to their planned construction operations, and submit any revisions to the Owner/LRP's QSD. The QSD will amend the SWPPP as necessary and the Owner/LRP will certify the updated SWPPP on the SMARTS website.

B. Best Management Practices (BMPs):

1. The QSP shall conduct inspections weekly and at least once each 24-hour period during extended storm events, to identify and record BMPs that need installation or maintenance to operate effectively. Should the QSP deem the BMPs proposed in the SWPPP are inadequate to meet the requirements of the CGP, or a change occurs in the nature or manner of construction operations not anticipated in the SWPPP, the QSP shall propose alternative BMPs that are equal to or better than those contained in the SWPPP.
2. Should the CONTRACTOR implement alternative BMPs, he shall prepare all addenda to the SWPPP required by the CGP and notify the Owner's QSD for review of amendments to the original SWPPP.
3. Failure to implement the BMPs as required to meet the intent of the CGP and the SWPPP is a breach of state and federal laws. Punishment for breaking the law can result in fines and imprisonment.
4. BMPs shall be maintained from the start of construction until final stabilization.

3.02 FIELD QUALITY CONTROL

A. Monitoring of BMPs

1. Monitoring by QSP
   a. Implement the CSMP (weekly, pre-storm, storm event, post-storm, quarterly inspections) as required by the CGP.
   b. Conduct training and testing as required by the CGP.
   c. Prepare and submit all reports to Owner/LRP and SWRCB as required by the SWPPP and the CGP. The CONTRACTOR is advised that the electronic filing of the Annual Report with the SWRCB by the Owner/LRP on behalf of the CONTRACTOR does not relieve the CONTRACTOR of any responsibility due to his failure to conduct proper inspection, testing, and training as required by the CGP. The CONTRACTOR shall bear full liability arising out of failure to conduct the required inspections, training, and testing detailed in the CSMP in the SWPPP.
2. Monitoring by Owner
   a. The Owner will monitor the CONTRACTOR's implementation and maintenance of the BMPs.
   b. Should the Owner determine that the CONTRACTOR's efforts fail to meet the requirements of the CGP, the SWPPP, and SWPPP amendments, the Owner reserves the right to employ any and/or all of the following actions:
      1) Notify the SWRCB of the perceived failure of the CONTRACTOR to comply with the CGP and SWPPP.
      2) Withhold an amount of money from the CONTRACTOR's Payment Request, equal to the Owner's estimate of the value of the work required to implement and maintain the required BMPs, as well as, provide the required inspection, training, and testing forms.
      3) Hire a separate QSP to perform the work required to implement the CSMP and deduct the costs thereof from the CONTRACTOR's Payment.

B. Availability and access to the SWPPP

1. The CONTRACTOR shall keep a minimum of one copy of the SWPPP and Addenda thereto in the following locations:

a. CONTRACTOR's Project Site Field Office.
b. CONTRACTOR's General Business Office.

2. The SWPPP shall be available for public inspection at any time during normal business hours.

3.03 CLEANING AND REMOVAL

A. Removal of BMPs

1. Completely remove from the Project Site all materials used to construct and maintain the temporary BMPs upon completion and acceptance of the Project.
2. Remove all accumulated debris and excess material from the BMPs and surrounding locations, and broom clean all adjacent hardscape surfaces to the satisfaction of the Owner.
3. All permanent BMPs shall remain on the Project Site. The Owner will be responsible for ongoing inspection and maintenance after final acceptance.

B. Under written agreement and with the approval of the Owner, the CONTRACTOR may assign maintenance and removal responsibilities of the project BMPs to a subsequent CONTRACTOR for later work phases at the Project Site.

3.04 RECORD KEEPING

Paper or electronic records of all CSMP inspections, testing, and training reports, including the Annual Report, shall be retained for a period of at least three years. These records shall be available at the project site until construction is completed.

3.05 PAYMENT

Full compensation for all costs involved in implementing, and monitoring the implementation of the SWPPP for this project, including inspections, testing, and training, performing corrective measures as required to better implement the SWPPP, providing all labor, materials, and resources to maintain the SWPPP and all required records of the SWPPP, and being full liable for all failures to fulfill the intent and requirements of the CGP set forth by the SWRCB, shall be included in the cost bid for the various items of work and no additional payment will be made therefore.

01 58 13 <u>Temporary Project Signage</u>

Reserved.

01 62 00. 01 <u>Materials and Products</u>

A. Except as otherwise specifically stated in this Contract, CONTRACTOR shall provide and pay for all materials, supplies, labor, tools, equipment, water, light, power, transportation, supervision, temporary construction of every kind and all other services and facilities necessary to perform and complete this Contract within the time specified.

B. Unless otherwise specified, all materials shall be new and of good quality.

C. Materials shall be furnished in ample quantities and at times to ensure uninterrupted progress of the Project and shall be properly stored and protected. CONTACTOR shall be solely responsible for any damage or loss by weather or other causes to materials or work under this Contract.

D. CONTRACTOR shall, after issuance of the Notice to Proceed by DISTRICT, place orders for materials and/or equipment as specified so that delivery of same may be made without delays to the Work. CONTRACTOR shall, upon demand from the ARCHITECT, furnish to the ARCHITECT documentary evidence showing that orders have been placed.

E. DISTRICT reserves the right, for any neglect in not complying with the above instructions, to place orders for such materials and/or equipment as it may deem advisable in order that the work may be completed at the date specified in the Contract, and all expenses incidental to the procuring of said materials and/or equipment shall be paid for by the CONTRACTOR.

F. No material, supplies, or equipment for work under this Contract shall be purchased subject to any chattel mortgage or under a conditional sale or other agreement by which an interest in all or any part is retained by the seller or supplier. CONTRACTOR warrants good title to all material, supplies and equipment installed or incorporated in the Work and upon completion of Project agrees to surrender the premises to DISTRICT, together with all improvements and appurtenances constructed or placed by CONTRACTOR, free from any claims, liens, or charges. CONTRACTOR further agrees that neither CONTRACTOR nor any person, firm, or corporation furnishing any materials or labor for any work covered by this Contract shall have any right to a lien upon the premises or any improvement or appurtenance, except that CONTRACTOR may install metering devices or other equipment of utility companies or of political subdivisions, title to which is commonly retained by the utility company or political subdivision. In the event of the installation of any metering device or equipment, CONTRACTOR shall advise DISTRICT as to its owner.

G. Nothing contained in this Section, however, shall defeat or impair the rights of any persons furnishing material or labor under any bond given by CONTRACTOR, for their protection, or any rights under any law permitting such persons to look to funds due CONTRACTOR and within the control of DISTRICT. This provision shall be inserted in all subcontracts and material contracts and notice of its provisions shall be given to all persons furnishing materials or labor when no formal contract is entered into for such materials or labor.

H. The title of new materials and/or equipment and attendant liability for its protection and safety shall remain with the CONTRACTOR until incorporated in the Work and accepted by the DISTRICT. No part of said materials and/or equipment shall be removed from its place of storage except for immediate installation in the Work. Further, CONTRACTOR shall keep an accurate inventory of all said materials and/or equipment in a manner satisfactory to the DISTRICT and its authorized representative.

01 71 03. 00 <u>Protection of Work and Property</u>

A. CONTRACTOR shall be responsible for all damages to persons or property which occur as a result of CONTRACTOR's fault or negligence in connection with the performance of this Contract. CONTRACTOR shall be responsible for the proper care and protection of all materials delivered and work performed until completion and final acceptance by DISTRICT. All CONTRACTOR responsibilities extend to the protection from vandalism and associated costs. With the exception of damage to the work caused by "acts of God," as defined in Public Contract Code Section 7105, CONTRACTOR assumes the risk for all work performed under this Contract. CONTRACTOR shall adequately protect adjacent property from settlement or loss of lateral support as provided by law and this Contract. CONTRACTOR shall take, and require all subcontractors to take, all necessary precautions for the safety of workers employed on the Project and shall comply with applicable safety laws and building codes to prevent accidents or injury to persons on, about, or adjacent to the premises where the work is being performed.

B. In an emergency affecting safety of life, work, or adjoining property, the CONTRACTOR is permitted to act at its discretion, without special instruction or authorization from ARCHITECT/ENGINEER or DISTRICT, to prevent

any threatened loss or injury; and CONTRACTOR shall act if authorized or instructed by ARCHITECT/ENGINEER or DISTRICT. Any compensation claimed by CONTRACTOR on account of emergency work shall be determined by the Contract.

C. CONTRACTOR shall take all necessary measures and be responsible for the proper care and protection of all materials delivered and work performed until completion and final acceptance by the DISTRICT. CONTRACTOR shall provide heat, cooling, covering, security, and enclosures as necessary to protect all work, materials, equipment, appliances and tools against damage or loss.

D. CONTRACTOR shall take adequate precautions to protect existing sidewalks, curbs, pavements, landscaping, utilities, adjoining property, structures, and other improvements; and avoid damage to them and repair any damage caused by construction operations.

01 71 16 <u>Acceptance of Conditions</u>

Reserved.

01 71 23 <u>Excavation, Layout, Field Engineering and Trenches</u>

A. CONTRACTOR shall provide adequate sheeting, shoring, and bracing, or equivalent method, for the protection of life and limb in trenches and open excavation which conform to applicable safety standards.

B. If this Contract involves the excavation of any trench or trenches four feet or more in depth, the CONTRACTOR shall, in advance of excavation, submit to the DISTRICT or to whomever the DISTRICT designates a detailed plan showing the design for shoring, bracing, shielding, sloping or other provisions to be made for worker protection from the hazard of caving ground during the excavation of such trench or trenches. If such plan varies from the Shoring System Standards established by the Construction Safety Orders of the Division of Industrial Safety, the plan shall be prepared by a registered civil or structural engineer employed by the CONTRACTOR, and all costs therefor shall be included in the price indicated in the Contract. In no case shall such plan be less effective than that required by the Construction Safety Orders. No excavation of such trench or trenches shall be commenced until said plan has been accepted by CAL-OSHA and a CAL-OSHA permit for such plan delivered to the DISTRICT.

C. If this Contract involves the digging of trenches or excavations below the surface, the following shall apply:

1. The CONTRACTOR shall promptly, and before the following conditions are disturbed, notify the DISTRICT, in writing, of any:

    a. Material that the CONTRACTOR believes may be material that is hazardous waste, as defined in Health and Safety Code Section 25117 that is required to be removed to a Class I, Class II, or Class III disposal site in accordance with the provisions of existing law.

    b. Subsurface or latent physical conditions at the site different from those indicated.

    c. Unknown physical conditions at the site of any unusual nature, different materially from those ordinarily encountered and generally recognized as inherent in work of the character provided for the Contract.

2. The DISTRICT shall promptly investigate the conditions, and if it finds that the conditions do materially so differ, or do involve hazardous waste, and cause a decrease or increase in the CONTRACTOR's cost of, or the time required for, performance of any part of the Contract, it shall issue a change order as provided in this Contract.

3. In the event a dispute arises between the DISTRICT and the CONTRACTOR, whether the conditions materially differ or involve hazardous waste, or cause a decrease or increase in the CONTRACTOR'S cost of, or time required for, performance of any part of the Project, the CONTRACTOR shall not be excused from any scheduled completion date provided for by the Contract Documents, but shall proceed with all the work to be performed under the Contract. The CONTRACTOR shall retain any and all rights provided either by contract or by law which pertain to the resolution of disputes and protests between the contracting parties.

D. All field engineering required for laying out this work and establishing grades for earth-work operations shall be furnished by CONTRACTOR at its expense. The work shall be done by a qualified civil engineer approved by the ARCHITECT/ENGINEER. "As Built" drawings of site development and utilities' location and inverts shall be prepared by an approved civil engineer.

E. CONTRACTOR has made an independent investigation of the job site, including underground conditions and all other conditions that might affect the progress of the Work and is satisfied as to those conditions.

01 71 23. 00 <u>Site and Utility Surveys</u>

When required by the scope of the Project, the DISTRICT will furnish, at its expense, a legal description or a land survey of the Site, giving, as applicable, grades and lines of streets, alleys, pavements, adjoining property, rights-of-way, restrictions, easements, encroachments, zoning, deed restrictions, boundaries, and contours of the Site. Surveys to determine locations of construction, grading, and site work shall be provided by the CONTRACTOR. The DISTRICT shall provide the lands, rights of way, and easements upon which the work under this Contract is to be done, and such other lands as may be designated on the Contract drawings for the use of the CONTRACTOR, and the CONTRACTOR shall confine its operations to within these limits. The CONTRACTOR shall provide, at its own expense, any additional land and access thereto that may be required for temporary construction facilities or storage of materials.

Unless otherwise stated in the Contract Documents, the CONTRACTOR shall be responsible to do all necessary staking and engineering services to layout and control the work to the elevations, lines, and dimensions shown on the plans. Any deviations must receive prior written approval of the DISTRICT. All staking and engineering services affecting the line or elevation of underground drainage, sewers, or utilities, and all other work within public rights of way or easements shall be performed by or under the direction and supervision of a Registered Civil Engineer or Licensed Land Surveyor, registered/licensed by the State of California.

01 73 01. 00 <u>Contractor's Supervision, Prosecution and Progress of Work</u>

A. During progress of the Work, CONTRACTOR shall keep on the work site a competent Superintendent satisfactory to DISTRICT. Before commencing the Project, CONTRACTOR shall give written notice to DISTRICT and ARCHITECT of the name, qualifications and experience of such Superintendent. If Superintendent is found unsatisfactory by DISTRICT, CONTRACTOR shall replace the Superintendent with one acceptable to the DISTRICT. Superintendent shall not be changed except with written consent of DISTRICT, unless a Superintendent proves to be unsatisfactory to CONTRACTOR and ceases to be in its employ, in which case, CONTRACTOR shall notify DISTRICT and ARCHITECT in writing and replace said Superintendent with one acceptable to the DISTRICT. Superintendent shall represent CONTRACTOR and all directions given to Superintendent shall be as binding as if given to CONTRACTOR. CONTRACTOR is referred to General Conditions, "Workers" Section for additional applicable provisions relating to Workers and Superintendent.

B. CONTRACTOR shall, at all times, enforce strict discipline and good order among CONTRACTOR's employees and shall not employ on the Project any unfit person or anyone not skilled in the tasks assigned.

C. CONTRACTOR shall supervise and direct the Work competently and efficiently, devoting such attention thereto and applying such skills as may be necessary to perform the Work in accordance with the Contract Documents. CONTRACTOR shall carefully study and compare all plans, drawings, specifications and other instructions and shall at once report to ARCHITECT any error, inconsistency or omission which CONTRACTOR or its employees may discover. The CONTRACTOR represents itself to DISTRICT as a skilled, knowledgeable, and experienced CONTRACTOR. The CONTRACTOR shall be liable to the DISTRICT for damage resulting from errors, inconsistencies, or omissions in the Contract Documents that the CONTRACTOR recognized and which CONTRACTOR knowingly failed to report or which a similarly skilled, knowledgeable, and experienced contractor would have discovered.

D. The CONTRACTOR shall verify all indicated dimensions before ordering materials or equipment, or before performing work. The CONTRACTOR shall take field measurements, verify field conditions, and shall carefully compare such field measurements and conditions and other information, known to the CONTRACTOR, with the Contract Documents before commencing work. Errors, inconsistencies, or omissions discovered shall be reported to the DISTRICT at once. Upon commencement of any item of work, the CONTRACTOR shall be responsible for dimensions related to such item of work and shall make any corrections necessary to make the work properly fit at no additional cost to DISTRICT. The responsibility for verification of dimensions is a non-delegable duty and may not be delegated to subcontractors or agents.

E. Omissions from the plans, drawings or specifications, or the misdescription of details of work which are manifestly necessary to carry out the intent of the plans, drawings and specifications, or which are customarily performed, shall not relieve the CONTRACTOR from performing such omitted or misdescribed work, but they shall be performed as if fully and correctly set forth and described in the plans, drawings and specifications.

F. The CONTRACTOR shall be solely responsible for the means, methods, techniques, sequences, and procedures of construction. The CONTRACTOR shall be responsible to see that the finished Work complies accurately with the Contract Documents.

G. Whenever the CONTRACTOR arranges to work at night, or at any time when work is not usually in progress, or to vary the period during which work is carried out each day, he shall give the DISTRICT due notice so that inspection may be provided. Such work shall be done without extra compensation to the CONTRACTOR, and such additional inspection costs shall be chargeable to the CONTRACTOR providing such work is not performed at the request of the DISTRICT to meet an earlier completion time than that established in the Contract Documents, or for a cause not under control of the CONTRACTOR.

01 74 00. 01 <u>Execution of Contract</u>

Execution of the Contract by the CONTRACTOR is a representation that the CONTRACTOR has visited the site, become familiar with local conditions under which the work is to be performed and correlated personal observations with requirements of the Contract Documents.

01 74 00. 02 <u>Cleaning Up</u>

A. At all times, CONTRACTOR shall keep the premises and all adjoining areas free of debris such as waste, rubbish and excess materials and equipment caused by the Work; debris shall be removed from the premises. CONTRACTOR shall not leave debris under, in, or about the premises. Prior to completion of the Work, CONTRACTOR shall remove from the Site all rubbish, waste and excess material, tools, construction equipment, machinery, temporary facilities and barricades, and any other items which are not the property of the DISTRICT under the Contract Documents. Upon completion of the Work, the Site and all adjoining areas shall be left in a neat and broom clean condition satisfactory to DISTRICT. Also upon completion of the Work, CONTRACTOR shall clean the interior and exterior of the

building, including fixtures, equipment, walls, floors, ceilings, roofs, window sills and ledges, horizontal projections, paved areas and sidewalks and any areas where debris has collected so surfaces are free from foreign material and discoloration; CONTRACTOR shall clean and polish all glass, plumbing fixtures and finish hardware and similar finish surfaces and equipment and remove temporary fencing barricades, planking, construction toilet and similar temporary facilities from the site.

B. A safe and clean working environment, that is conducive to student learning, is required by the DISTRICT. If the CONTRACTOR fails to clean up during performance of the Project or at the completion of the Project, the DISTRICT may do so and the cost for such clean up shall be charged back to the CONTRACTOR, with DISTRICT deducting such costs from any portion of the Contract Price then or thereafter due CONTRACTOR.

01 74 13 Progress Cleaning

Reserved.

01 74 16 Site Maintenance

Reserved.

01 74 23 Final Cleaning

Reserved.

01 76 00 Protecting Installed Construction

Reserved.

01 77 00. 01 Final Inspection

If the CONTRACTOR fails to complete the minor corrective items prior to the expiration of the period within which retention must be released as described in California Public Contract Code Section 7107, the DISTRICT shall withhold from the final payment an amount up to 150 percent of estimated cost, as determined by the DISTRICT in its discretion, of each item until such time as the item is completed. At the end of such period, if there are items remaining to be corrected, the DISTRICT may elect to proceed as provided in the "Contract Modification Procedures" Section.

01 77 00. 02 Cost of Multiple Inspections

More than two (2) requests of the DISTRICT to make inspections required under Section 01 77 00. 01, Final Inspection, above shall be considered an additional service of ARCHITECT, and all subsequent costs will be invoiced to CONTRACTOR and withheld from remaining payments.

01 78 23. 00 Equipment Manuals

CONTRACTOR shall obtain and furnish three (3) complete sets of manuals containing the manufacturers' instructions for maintenance and operation of each item of equipment and apparatus furnished under the Contract Documents and any additional data specifically requested under the various sections of the Specifications for each division of the Work. The manuals shall be arranged in proper order, indexed, and placed in three-ring binders. At the completion of its Work, the CONTRACTOR shall certify, by endorsement thereon, that each of the manuals is complete, accurate, and covers all of its Work. Prior to submittal of CONTRACTOR's Application for Final Payment, and as a further condition to its approval by the ARCHITECT, each Subcontractor shall deliver the manuals, arranged in proper order, indexed, endorsed, and placed in three-ring binders, to the CONTRACTOR who shall assemble these manuals for all divisions of the Work, review them for completeness, and submit them to the DISTRICT through the ARCHITECT.

01 78 36. 01 Warranty and Guarantee

A. CONTRACTOR warrants that the Work, which includes any equipment furnished by CONTRACTOR as part of the materials, shall:

1. be free from defects in workmanship and material,
2. be free from defects in any design performed by CONTRACTOR,
3. be new, and conform and perform to the requirements stated in the specifications and where detail requirements are not so stated, shall conform to applicable industry standards, and
4. be suitable for the use stated in the specifications.

B. The warranty period for all defective work, labor, materials, and equipment shall commence on the date of completion noted on the Notice of Completion (And Acceptance) of the Work, or designated portion thereof, and continue for the period set forth in the specifications or for **one (1) year if not so specified**. If, during the warranty period, the Work is not available for use due to defective work, such time of unavailability shall not be counted as part of the warranty period. The warranty period for corrected defective work shall continue for a duration equivalent to the original warranty period.

1. One month prior to the expiration of the applicable warranty period, CONTRACTOR shall attend with DISTRICT's representative(s) and consultants a pre-expiration warranty review, including but not limited to a site walk and review meeting (and follow-up meeting, if DISTRICT deems it necessary), for the purpose of identifying and addressing any and all warranty items in existence at such time, including any newly-discovered items during such review and site walk. CONTRACTOR shall see that all warranty items noted as a result of such warranty review are properly addressed and repaired prior to the expiration of the applicable warranty period.

C. DISTRICT shall give CONTRACTOR prompt written notice after discovery of any defective work. CONTRACTOR shall correct any such defective work, as well as any damage to any other part of the Work resulting from such defective work, and provide repair, replacement, or reimbursement, at its sole expense, in a manner approved by the DISTRICT and with due diligence and dispatch as required to make the Work ready for use by DISTRICT, ordinary wear and tear, unusual abuse or neglect excepted. Such corrections shall include, but not be limited to, any necessary adjustments, modifications, changes of design, unless of DISTRICT'S design, removal, repair, replacement and reinstallation, and shall include all necessary parts, materials, tools, equipment, transportation charges and labor as may be necessary, and cost of removal and replacement of work shall be performed at a time and in such a manner so as to minimize the disruption to DISTRICT'S use of the work. Written notice can be, but not limited to, facsimile or e-mail to addresses provided by contractor as a part of bid package.

D. In the event of failure of CONTRACTOR or Surety to commence and pursue with diligence said repairs or replacements within five (5) calendar days after being notified in writing, DISTRICT is hereby authorized to proceed to have any defects repaired or replaced and made good at the expense of CONTRACTOR and Surety who hereby agrees to pay the costs and charges therefor immediately upon demand.

E. If, in the opinion of the DISTRICT, defective work creates a dangerous condition or requires immediate correction or attention to prevent further loss to the DISTRICT or to prevent interruption of operations of the DISTRICT, the DISTRICT will attempt to give the written notice required by this Section. If the CONTRACTOR or Surety cannot be contacted or neither complies with the DISTRICT'S requirements for correction within a reasonable period of time, as determined by DISTRICT, the DISTRICT may, notwithstanding the provisions of this Section, proceed to make such correction or provide such attention, and the costs of such correction or attention shall be charged against the CONTRACTOR and Surety. Such action by the DISTRICT shall not relieve the CONTRACTOR and Surety of the guarantees provided in this Section or elsewhere in the Contract Documents.

F. This Section does not, in any way, limit the guarantees on any items for which a longer guarantee is specified or on any items for which a manufacturer gives a guarantee for a longer period. CONTRACTOR shall furnish to DISTRICT all appropriate guarantee or warranty certificates upon completion of the Project or upon request by DISTRICT.

G. All guarantees required under this Section shall be submitted to the DISTRICT in the following form on CONTRACTOR letter head as a prerequisite to final payment:

> GUARANTEE FOR _____. We hereby guarantee the _____ which we have installed in the _____ at _____ for _____ years from date of recordation of the Notice of Completion (And Acceptance). CONTRACTOR agrees to repair or replace to the satisfaction of the DISTRICT any and all such work that may prove defective in workmanship of materials within that period, ordinary wear and tear and unusual abuse or neglect excepted, together with any other work which may be damaged or displaced in so doing.
>
> CONTRACTOR agrees to respond to first notice within 48 hours and to remedy the condition within five (5) calendar days. If the CONTRACTOR fails to comply with the above mentioned conditions within five (5) calendar days after being notified in writing, the DISTRICT may have the defects repaired and made good at the CONTRACTOR'S expense and the CONTRACTOR will pay the costs and charges therefor immediately upon demand. Any and all guarantees offered by manufacturers of equipment used or installed in the Project shall also be extended to the DISTRICT.
>
> _____ _____
>
> Subcontractor/Supplier Contractor Date

H. In addition, CONTRACTOR shall provide to DISTRICT instruction manuals for all items which require same.

I. Nothing contained in this contract shall limit any other legal rights or remedies available to DISTRICT against either the CONTRACTOR or the Surety.

J. The DISTRICT may recover its reasonable attorney fees and costs in any action to enforce the provisions of this Section.

01 78 39. 00 <u>Record Drawings and Annotated Specifications</u>

The CONTRACTOR will prepare and maintain on a current basis an accurate and complete set of Record Drawings showing clearly all changes, revisions, and substitutions during construction, including, without limitation, field changes and the final location of all mechanical equipment, utility lines, ducts, outlets, structural members, walls, partitions, and other significant features, and Annotated Specifications showing clearly all changes, revisions, and substitutions during construction. A copy of such Record Drawings and Annotated Specifications will be delivered to DISTRICT in accordance with the schedule prepared by CONTRACTOR. In the event of a specification that allows CONTRACTOR to elect one of several brands, makes, or types of material or equipment, the annotations shall show which of the allowable items the CONTRACTOR has furnished. The CONTRACTOR will update the Record Drawings and Annotated Specifications as often as necessary to keep them current but no less often than weekly. The Record Drawings and Annotated Specifications shall be kept at the Site and available for inspection by the DISTRICT, Inspector of Record, and the ARCHITECT. On completion of the CONTRACTOR's portion of the Work and prior to Application for Final Payment, the CONTRACTOR will provide one (1) complete paper set and one (1) electronic copy of Record Drawings and Annotated Specifications to the DISTRICT, certifying them to be a complete and accurate reflection of the actual construction conditions of the Work.

01 78 46 Extra Stock Materials

Reserved.

01 79 00 Demonstration & Training

Reserved.

01 91 00. General Commissioning Requirements

A. This Article includes general requirements that apply to implementation of commissioning without regard to specific systems, assemblies, or components; including mechanical, electrical, plumbing, and low voltage systems.

CONTRACTOR shall:

1. Schedule and attend construction phase commissioning meetings;
2. Coordinate and ensure that CONTRACTOR and all SUBCONTRACTORS execute their commissioning responsibilities inclusive of start-up execution, functional testing, sequences of operation, balance, programming, and (if provided) subject to any other commissioning tasks described in the Contract Documents, including but not limited to the Drawings and/or commissioning Specifications;
3. Prepare and maintain the issues log, construction checklist log, point lists, commissioning logs, test data, inspection reports, and certificates;
4. Furnish submittals related to commissioned equipment to the ARCHITECT/ENGINEER and DISTRICT including but not limited to shop drawings, O&M manuals, as-built drawings, manufacturer commissioning tasks checklists, functional/final testing results; and
5. Provide the training of DISTRICT personnel.

B. Where applicable, certain commissioning tasks from the initial commissioning will continue throughout the typical one-year warranty period. CONTRACTOR shall be responsible and coordinate seasonal functional testing and near warranty end review. CONTRACTOR shall ensure that subcontractors and manufacturer's representatives correct deficiencies and make necessary adjustments to O&M manuals and as-built drawings for applicable issues identified in seasonal and near warranty end testing. The commissioning process will be deemed completed when approved by the CONTRACTOR, and accepted by the ARCHITECT/ENGINEER and DISTRICT typically at the end of the one-year warranty period. The DISTRICT reserves the right to employ a third party Commissioner at the DISTRICT's expense.

ATTACHMENT "A"

Fresno Unified School District

CONTRACTOR EMERGENCY CONTACT INFORMATION

Date: _____

Project Name: _____

Project Address: _____**City:** _____**CA Zip:**_____

District Responsible Manager: _____

CELL PHONE #

Prime Contractor Company Contact Information

PROJECT PRIMARY CONTACT	TITLE	
RESPONSIBLE SAFETY OFFICER	24 HR. PHONE #	E-MAIL
COMPANY NAME	BUSINESS PHONE #	FAX PHONE #
ADDRESS	24 HOUR PHONE #	
CITY, ST, ZIP	EMAIL ADDRESS	

EMERGENCY CONTACTS:		**24 HR. PHONE**	**E-MAIL**
PRIME CONTRACTOR:			
NAME	TITLE		
NAME	TITLE		
NAME	TITLE		

KEY SUBCONTRACTORS:

NAME	TITLE	24 HR. PHONE	E-MAIL

Sub-Contractor Contacts List Attached: Yes: _____ No: _____

ATTACHMENT "B"

NOTICE OF START/REQUEST FOR LOCATION OF DISTRICT UTILITIES

Fresno Unified School District

Facilities Management and Planning Phone: (559) 457-3074 Fax: (559) 457-3060

Submission of Notice of Start to DISTRICT Facilities Management and Planning is required for implementation.
Submit at least 48 hours prior to proposed start of any trenching, excavation or grading operations on District Property. **Do not start any work without a confirmed start date from DISTRICT.**
Contractor is responsible for calling USA at (800) 227-2600 prior to submitting this form.

COMPLETE ALL ITEMS BELOW PRIOR TO SUBMITTING:

Date Submitted: _____

To: _____ From: _____ Fax: _____
DISTRICT FACILITIES PROJECT MGR.

cc: _____ E-MAIL: _____ Fax: (559) 457-3060
DISTRICT FACILITIES ASST. P.M.

cc: _____ E-MAIL: _____ Fax: (559) 457-3060
DISTRICT FACILITIES ASST. P.M.

Subject: _____

School or Site: _____

Exact location on site where work is being performed: _____

Requesting Contractor Company Name: _____

Field Project Superintendent: _____ Cell Number: _____

Requested Start Date: _____ Requested Start Time: _____

Contractors' markings must be in white, outline the area and verified by Inspector prior to submitting 48 hour notice to DISTRICT.

Inspector's Name: _____

Have markings been verified by Inspector: Yes / No Inspector's Initials: _____

Nature of work to be done: (blasting, boring, digging, drilling, grading, trenching, tunneling, etc.) Please provide a detailed description of what is being done and work location. Include diagram marking areas of work: _____

_____

	DISTRICT USE ONLY	DISTRICT USE ONLY	DISTRICT USE ONLY	
DISTRICT Confirmed Start Date:			Confirmed Start Time:	
Approved By:			Returned To:	
Returned By:			Returned Date:	
			Returned Time:	

USA # _____

Date Called: _____ Date Expires: _____

This form MUST be resubmitted and USA called again after 30 days.

ATTACHMENT "C"

FRESNO USD FINGERPRINTING AND I.D. BADGE PROCEDURE

Fresno Unified School District

1. **District Fingerprinting Location:** Contractors must get fingerprinted through the District for information responses for both the Department of Justice (DOI) and the FBI databases. Fingerprinting through other entities not valid i.e. police dept., sheriff, other districts, etc.

   Location:
   2309 Tulare St., Fresno Ca 93721
   Human Resources Dept. – Ricky Vang
   Phone No.: (559) 457-3500
   Fingerprinting from 8:00 AM – 2:30 PM, Monday through Friday;

2. **Fee:** $68 per person which checks FBI and Dept. of Justice (DOJ) database;

3. **Payment:** District will only accept money order or cashier's check (business checks, personal checks or cash cannot be accepted);

4. **Identification:** Contractor must bring a valid driver's license or valid form of ID;

5. **Fingerprinting Form:** Fingerprinting Authorization Form and Live Scan Form to be obtained and completed at District H.R. department;

6. **Clearance Period:** Standard clearance time is 5 business days; however, clearance can take up to 30 calendar days or more;

7. **Clearance Notification:** District H.R. department will notify contractor, safety office, and appropriate district supervising manager upon clearance by the District;

8. **Badge Photo:** After Contractor has been notified by District H.R. department of fingerprint clearance, go to the Fresno Unified Safety Office for a photograph and issuance of ID badge. The Safety Office will not issue an ID badge prior to fingerprint clearance;

   Location:
   2348 Mariposa, Fresno Ca 93721
   Safety Office. – Armand Chavez
   Phone No.: (559) 457-3980
   Photo & Badge from 8:30 AM – 3:00 PM, Monday through Friday;

9. **Valid Period of ID badges:** Badges will be issued with an expiration date of 60 days after the project completion date stated in the contract documents;

10. **Badge Return or Replacement:** Contractor must return ID badge to the district project manager upon completion of the project. Replacement badges required due to expiration date or lost badge may be obtained at the Safety Office.

Fresno Unified
School District

ATTACHMENT "D"

Notification of COVID 19: Governor's Executive Order / Effects on Construction Projects

The purpose of this correspondence is to provide you with a brief summary of the most recent orders with respect to health and safety as well as their impact and potential impact on District Public Works and Maintenance/Repair Projects.

State Orders

As you are undoubtedly aware, because COVID-19 poses significant health threats and challenges to the State's medical infrastructure, Governor Newsom declared a State of Emergency on March 4, 2020 ("Emergency"). Then, on March 19, 2020, the Governor signed Executive Order N-33-20 ("State Order") which, in summary, mandates all state residents to stay home "*except as needed to maintain continuity of operations of the federal critical infrastructure sectors.*" Later in the evening on March 19, 2020, the State's COVID-19 website posted a statement that specifically added "construction" as an activity that can continue under the State Order. Because the Governor's office has yet to exclude public school construction from this broad "construction" exemption and based on the representations made by the State to date, **the State Order does not prohibit contractors from working on construction projects for educational facilities**, which includes District Public Works and Maintenance/Repair Projects.

As a result of the foregoing, the Emergency and State Order do not prevent CONTRACTORS AND HIS SUBCONTRACTORS from performing work on the Project. Indeed, given that the State Order, as currently construed, permits CONTRACTORS AND HIS SUBCONTRACTORS to continue to perform work on the Project, the District invites and encourages CONTRACTORS AND HIS SUBCONTRACTORS to continue to do so under any current Agreement or an Agreement resulting from ongoing bidding during the Emergency.

Social/Physical Distancing. We note that the Emergency order required social distancing. That order stated:

> ***For purposes of this Order, "Social Distancing Requirements" includes maintaining at least six-foot social distancing from other individuals, washing hands with soap and water for at least twenty seconds as frequently as possible or using hand sanitizer, covering coughs or sneezes (into the sleeve or elbow, not hands), regularly cleaning high-touch surfaces, and not shaking hands.***

The social/physical distancing requirements are of course, still in effect and must be followed on all District projects. The District prioritizes the safety of your employees as well as all others present upon District project job sites. Accordingly, CONTRACTORS AND HIS SUBCONTRACTORS should only perform those scopes of work for which it can maintain the required social/physical distancing based on the State, Local, and Center for Disease Control's

("**CDC**") guidelines and recommendations. In some instances, meeting these requirements may be easier to achieve because there are no students or teachers in proximity to the project location(s). CONTRACTORS AND HIS SUBCONTRACTORS must ensure the safety of its workers and if it cannot ensure social/physical distancing, then it should avoid dispatching workers. Again, that is CONTRACTOR'S AND HIS SUBCONTRACTOR'S decision and it must make its own feasibility determination. If it determined that it cannot comply with the State Order and so informs the District, the District will of course, not order CONTRACTORS AND HIS SUBCONTRACTORS to return to work.

In either case, CONTRACTORS AND HIS SUBCONTRACTORS must coordinate with District staff to secure the site, to ensure there are no unsafe conditions, to not create an attractive nuisance, and to secure its equipment, materials, etc. Regardless of whether CONTRACTORS AND HIS SUBCONTRACTORS determines it must suspend its work, it still must ensure its work site is secure.

Project Impacts

The District is mindful of the Emergency's potential impacts on contractors and subcontractors and will work with CONTRACTORS AND HIS SUBCONTRACTORS to try and mitigate schedule impacts caused by the Emergency. However, is imperative that CONTRACTORS AND HIS SUBCONTRACTORS be proactive in informing the District not only about present problems, but about possible issues that may arise in the future, whether related to Project schedule, costs, supply chain issues, or related matters. The District invites discussions as to how the parties may accomplish this.

Thank you for your prompt attention to the above matter. Please feel free to contact the District if you have any questions.

SECTION 011113 – SUMMARY OF WORK

PART 1 - GENERAL

1.1 SUMMARY

A. Work included: Construction of BASE BID portions of the work for ADDAMS ES NEW CLASSROOM, KINDERGARTEN, AND ADMIN BUILDINGS AND MODERNIZATION, FRESNO, California. The work is defined as all material, labor, equipment and services necessary to do all work shown on the drawings and called for in the Specifications.

B. This Section includes the following:
1. Summarizes the Work of the Contract.
2. Establishes requirements governing the Work.
3. Identifies the Work that will be performed under separate contracts and required coordination.
4. Project Site access.
5. Restrictions under which the project will be constructed.

C. Related Sections: The following Project Manual Sections contain requirements that relate to this section:
1. ALL DIVISION 00 SPECIFICATION SECTIONS.
2. ALL DIVISION 01 SPECIFICATION SECTIONS.
3. ALL SPECIFICATION SECTIONS IN THE FACILITY CONSTRUCTION SUBGROUP.
4. ALL SPECIFICATION SECTIONS IN THE FACILITY SERVICES SUBGROUP.
5. ALL SPECIFICATION SECTIONS IN THE SITE AND INFRASTRUCTURE SUBGROUP.

1.2 DEFINITIONS

A. The words "OWNER" and "DISTRICT" are synonymous and interchangeable, when used throughout this Project Manual.

1.3 SUBMITTALS

A. Submit in accordance with Specification Section - SUBMITTAL PROCEDURES.
1. Quality Assurance/Control Submittals:
   a. Certificates:
      1) Submit three (3) copies of certificates indicating compliance with the Asbestos Hazard Emergency Regulations Act.

1.4 WORK UNDER OTHER CONTRACTS

A. General Requirements:

1. Work under separate contracts will occur throughout the duration of the project. The work being installed under separate contracts will occur around adjacent to the Contract project site including offsite work.
2. Contractor shall be responsible for coordinating access to and from the site throughout the duration of the project. Access points to and from the site may vary, based upon timing and duration of separate contracts.
3. Contractor shall cooperate and coordinate all work under this Contract with all work under separate contracts.
4. Should the Contractor damage and/or otherwise alter work installed under separate contracts, Contractor responsible for the correction repair of work installed under separate contracts.
5. Prior to the installation of the Work, coordinate the work installed or to be installed by separate contracts relative to own work.

B. Separate Contracts by Owner:
1. Owner Furnished Items, as defined in Specification Section – OWNER-FURNISHED ITEMS.

1.5 QUALITY ASSURANCE

A. Contractor's Duties:
1. Except as specifically noted, provide and pay for:
   a. Labor, material and equipment.
   b. Tools, construction equipment and machinery.
   c. Heat and utilities required for construction. See Specification Section - TEMPORARY FACILITIES AND CONTROLS.
   d. Other facilities and services necessary for proper execution and completion of Work.
2. Pay legally required sales, consumer and use taxes.
3. Secure and pay for all site specific as necessary for proper execution and completion of Work.
   a. Licenses.
   b. Permits and Fees.
   c. Government Fees .
   d. Royalties.
4. Give required notices.
5. Comply with codes, ordinances, rules, regulations, orders and other legal requirements of public authorities which bear on performance of Work.
   a. The Contractor shall certify in writing that no materials containing Asbestos are incorporated in the work, in accordance with the Asbestos Hazard Emergency Regulations Act.
6. Promptly submit written notice to Architect of observed variance.
7. Enforce strict discipline and good order among employees. Do not employ on Work:
   a. Unfit persons.
   b. Persons not skilled in assigned task.

1.6 PROJECT CONDITIONS OR SITE CONDITIONS

A. Future / Concurrent Contracts:

1. Coordinate all work as indicated in Specification Section – OWNER-FURNISHED ITEMS.

B. Work under other separate Contracts may occur concurrently with and/or adjacent to the work of this Contract.

C. This Contractor shall coordinate it's work with the work of these separate Contracts and shall cooperate with the Contractors of these separate Contracts as they occur.

D. This Contractor shall not use the Off-Site areas cited above, with the exception of the Site Access per Specification Section - TEMPORARY FACILITIES AND CONTROLS, and shall not interfere with the work in these areas.

E. Contractor Use of Premises:
1. Confine operations at sites to areas permitted by:
   a. Laws
   b. Ordinances
   c. Permits
   d. Contract Documents
2. Do not unreasonably encumber site with materials or equipment.
3. Do not load structure with weight that will endanger structure.
4. Assume full responsibility for protection and safekeeping of Contractor's and Owner's material stored on premises, and keep the site and building secure at all times.
5. Obtain and pay for use of additional storage or Work areas needed for operations.
6. Limit use of site for Work and storage.

1.7 Scheduling

A. The Project includes all work areas listed. Due to the site working a traditional school year, certain areas of work and facilities will not be available to the Contractor on the Notice to Proceed date for the overall project. Also, in order to have a complete facility at the completion of this Project, certain areas of work must be completed prior to the Overall Project Completion Dates. Liquidated Damages will be assessed if the work has not been completed by the stated dates. Some phased work may overlap other phases.
1. **Work Area 1a: New 10 Classroom Building N:**
   a. Once the Notice to Proceed (NTP) is issued to the contractor, they shall have access to the portion of the site related to the Classroom Building N and may commence all work related to erecting Building N.
   b. Utility connections or tie-ins that will affect other site buildings must be done after hours or during the summer, so as not to negatively affect the function of the existing buildings on site.
   c. Begin installation of new interim portables (Separate DSA Application) and all related site work.
   d. Once the interim portables are completed, coordinate with the Owner on where to relocate nine (9) existing portables and begin demolition of existing site work related to Building N.
2. **Work Area 1b: Relocated Portables on and offsite**
   a. Once Building N is completed and occupied, coordinate the relocation of 5 existing portables in the area adjacent to Building N.

b. Salvage and Relocate portables contained in Work Area 2. Coordinate with the Owner on where to relocate existing eight (8) portables offsite and begin demolition of existing site work related to Work Area 2
c. Disconnect and remove 1 empty interim portable.

3. **Work Area 2: Building L, Building M, and Parking Lot:**
   a. Once the portables are relocated, contractor will have full access to Work Area 2. Which includes Building L, Building M, Kindergarten Play area, Parking/Drop off, Shade Structure, and Site work improvements.
4. **Work Area 3: Building B Classroom Modernization and Drop off:**
   a. Once Building L and M are completed, the remodel of the admin area in the Existing Building B shall begin. This also includes turning the storage room into an Exterior hallway and the site work for the new drop off.
   b. Once all interim portables are emptied, remove the interim portables and associated site work.
5. **Work Area 4: Baseball and Soccer Fields:**
   a. Once all the interim portables are removed, begin work on the Baseball and Soccer fields and associated site work.

B. **Work Areas and Completion Milestone Dates**: The following areas will be available to the Contractor to start on the dates stated and shall be complete for turnover to the Owner on the second date stated.

1. <u>Work Area 1a</u> - New 10 Classroom Building N.
   a. Start Date: NTP Date: TBD
   b. Duration: - days Completion Milestone #1 Date: TBD

2. <u>Work Area 1b</u> - Relocated Portables
   a. Start Date: TBD
   b. Duration: - days Completion Milestone #2 Date: TBD

3. <u>Work Area 2</u> - Building L, Building M, and Parking Lot:
   a. Start Date: TBD
   b. Duration: - days Completion Milestone #3 Date: TBD

4. <u>Work Area 3</u> - Building B Classroom Modernization and Drop off
   a. Start Date: TBD
   b. Duration: - days Completion Milestone #4 Date: TBD

5. <u>Work Area 4</u> - Baseball and Soccer Fields
   a. Start Date: TBD
   b. Duration: - days Completion Milestone #4 Date: TBD

C. A Sequencing Schedule for coordinating this work will need to be provided by Contractor to the Owner and Architect for approval.

PART 2 - PRODUCTS

NOT APPLICABLE

PART 3 - EXECUTION

NOT APPLICABLE

END OF SECTION

INTENTIONALLY LEFT BLANK

SECTION 012113 – ALLOWANCES

PART 1 - GENERAL

1.1 SUMMARY

A. This Section includes the following:
   1. Provide all material, labor, equipment and services necessary to completely install all allowance materials, accessories and other related items necessary to complete the Project as indicated by the Contract Documents.
   2. Certain items are specified in the Contract Documents by allowances. Allowances have been established in lieu of additional requirements and to defer selection of actual materials and equipment to a later date when additional information is available for evaluation. If necessary, additional requirements will be issued by CHANGE ORDER.

B. Related Sections: The following Project Manual Sections contain requirements that relate to this section:
   1. ALL DIVISION 00 SPECIFICATION SECTIONS.
   2. ALL DIVISION 01 SPECIFICATION SECTIONS.
   3. ALL SPECIFICATION SECTIONS IN THE FACILITY CONSTRUCTION SUBGROUP.
   4. ALL SPECIFICATION SECTIONS IN THE FACILITY SERVICES SUBGROUP.
   5. ALL SPECIFICATION SECTIONS IN THE SITE AND INFRASTRUCTURE SUBGROUP.

C. Allowances (Types):
   1. Lump-sum allowances.

1.2 DEFINITIONS

A. Lump-Sum Allowances:
   1. Allowance shall include cost to Contractor of specific products and materials ordered under allowance and shall include taxes, freight, and delivery to Project site.
   2. Contractor's costs for receiving and handling at Project site, labor, installation, overhead and profit, and similar costs related to products and materials ordered under allowance shall be included as part of the Contract Sum and not part of the allowance.

1.3 SYSTEM DESCRIPTION

A. Selection and Purchase:
   1. At the earliest practical date after award of the Contract, advise Architect of the date when final selection and purchase of each product or system described by an allowance must be completed to avoid delaying the Work.
   2. At Architect's request, obtain proposals for each allowance for use in making final selections. Include recommendations that are relevant to performing the Work.
   3. Purchase products and systems selected by Architect from the designated supplier.

1.4 SUBMITTALS

A. Submit in accordance with Specification Section - SUBMITTAL PROCEDURES:
   1. Although not considered a CHANGE ORDER, submit proposals for purchase of products or systems included in allowances, in the form specified for a CHANGE ORDER.
   2. Submit invoices or delivery slips to show actual quantities of materials delivered to the site for use in fulfillment of each allowance.
   3. Coordinate and process submittals for allowance items in same manner as for other portions of the Work.

1.5 QUALITY ASSURANCE

A. Meetings:
   1. Pre-Installation: Scheduled by the Contractor prior to the start of work.
      a. Coordinate the work with other work being performed.
      b. Identify any potential problems, which may impede planned progress and proper installation of work regarding quality of installation and warranty requirements.
   2. Progress: Scheduled by the Contractor during the performance of the work.
      a. Review for proper installation of work progress.
      b. Identify any installation problems and acceptable corrective measures.
      c. Identify any measures to maintain or regain project schedule if necessary.
   3. Completion: Scheduled by the Contractor upon proper completion of the work.
      a. Inspect and identify any problems, which may impede issuance of warranties or guaranties.
      b. Maintaining installed work until the Notice of Substantial Completion has been filed.

1.6 SEQUENCING AND SCHEDULING

A. Coordinate allowance items with other portions of the Work. Furnish templates as required to coordinate installation.

1.7 MAINTENANCE

A. Unused Materials:
   1. Return unused materials purchased under an allowance to manufacturer or supplier for credit to Owner, after installation has been completed and accepted.
      a. If requested by Architect, prepare unused material for storage by Owner when it is not economically practical to return the material for credit. If directed by Architect, deliver unused material to Owner's storage space. Otherwise, disposal of unused material is Contractor's responsibility.

PART 2 - PRODUCTS

NOT APPLICABLE

PART 3 - EXECUTION

3.1 EXAMINATION

A. Examine products covered by an allowance promptly on delivery for damage or defects. Return damaged or defective products to manufacturer for replacement.

3.2 PREPARATION

A. Coordinate materials and their installation for each allowance with related materials and installations to ensure that each allowance item is completely integrated and interfaced with related work.

3.3 SCHEDULES

A. Allowance No. 1 - $20,000.00:
   1. Include Locker Parts and Equipment as specified in Specification Section – METAL LOCKERS.

END OF SECTION

INTENTIONALLY LEFT BLANK

SECTION 012300 – ALTERNATES

PART 1 - GENERAL

1.1 SUMMARY

A. This Section includes the following:
   1. Provide all material, labor, equipment and services necessary to completely install or remove all materials, accessories and other related items necessary to add or delete from the Project as indicated by the alternates in the Contract Documents.
      a. When Deductive Alternates are incorporated into the Contract, any services such as utilities that are meant to pass thru the Deductive Alternate areas that serve other areas not involved shall be maintained as part of the Base Bid whether indicated or not.

B. Related Sections: The following Project Manual Sections contain requirements that relate to this section:
   1. ALL DIVISION 00 SPECIFICATION SECTIONS.
   2. ALL DIVISION 01 SPECIFICATION SECTIONS.
   3. ALL SPECIFICATION SECTIONS IN THE FACILITY CONSTRUCTION SUBGROUP.
   4. ALL SPECIFICATION SECTIONS IN THE FACILITY SERVICES SUBGROUP.
   5. ALL SPECIFICATION SECTIONS IN THE SITE AND INFRASTRUCTURE SUBGROUP.

1.2 DEFINITIONS

A. Alternate: An amount proposed by bidders and stated on the BID FORM for certain work defined in the Bidding Requirements that may be added to or deducted from the Base bid amount if the Owner decides to accept a corresponding change either in the amount of construction to be completed or in the products, materials, equipment, systems, or installation methods described in the Contract Documents.
   1. The cost or credit for each alternate is the net addition to or deduction from the Contract Sum to incorporate alternate into the work. No other adjustments are made to the Contract Sum.

1.3 SUBMITTALS

A. Submit in accordance with Specification Section - SUBMITTAL PROCEDURES:
   1. Quality Assurance/Control Submittals:
      a. Notification Letter:
         1) Submit three (3) copies of Notification Letter to all concerned on the status of all ALTERNATES.

1.4 QUALITY ASSURANCE

A. Procedures:
1. Coordination: Modify or adjust affected adjacent work as necessary to completely integrate work of the alternate into the Project.
   a. Include as part of each alternate, miscellaneous devices, accessory objects, and similar items incidental to or required for a complete installation whether or not indicated as part of alternate.
   b. Provide Lump Sum Price (and all itemized prices) for construction of the Base Bid and each Alternate Bid on the BID FORM.
2. Notification: Immediately following award of the Contract, notify each party involved, in writing, of the status of each alternate. Indicate if alternates have been accepted, rejected, or deferred for later consideration. Include a complete description of negotiated modifications to alternates.
3. Execute accepted alternate under the same conditions as other work of the Contract.
4. Schedule: A schedule of Alternates is included at the end of this Section. Specification Sections referenced in the schedule contain requirements necessary to achieve the work described under each alternate.

PART 2 - PRODUCTS

NOT APPLICABLE

PART 3 - EXECUTION

3.1 SCHEDULES

A. DEDUCTIVE ALTERNATE BID NO. 1:
1. ITEM NO. 1:
2. ITEM NO. 2:

B. DEDUCTIVE ALTERNATE BID NO.2:
1. ITEM NO. 1:
2. ITEM NO. 2:
3. ITEM NO. 3:

END OF SECTION

SECTION 012500 – SUBSTITUTION PROCEDURES

PART 1 - GENERAL

1.1 SUMMARY

A. This Section includes the following:
   1. Work that is substituted for Work specified in DIVISIONS 02 through 49 shall meet the requirements of this Section.
   2. Provide all material, labor, equipment and services necessary to completely install all approved substituted materials, accessories and other related items necessary to complete the Project as indicated by the Contract Documents.

B. Related Sections: The following Project Manual Sections contain requirements that relate to this section:
   1. ALL DIVISION 00 SPECIFICATION SECTIONS.
   2. ALL DIVISION 01 SPECIFICATION SECTIONS.
      a. 01 25 13.01 Product Substitution Procedure (FUSD)
   3. ALL SPECIFICATION SECTIONS IN THE FACILITY CONSTRUCTION SUBGROUP.
   4. ALL SPECIFICATION SECTIONS IN THE FACILITY SERVICES SUBGROUP.
   5. ALL SPECIFICATION SECTIONS IN THE SITE AND INFRASTRUCTURE SUBGROUP.

1.2 DEFINITIONS

A. Claimant: Bidder, Sub-Contractor, Contractor, Distributor, Supplier, Manufacturer or other entity that is submitting a claim for a substitution.

B. Substitutions: Substitutions are not a part of the Submittal Process described in Specification Section – SUBMITTAL PROCEDURES. Substitution Requests by a claimant must be reviewed and approved by the Architect before any submittal will be accepted. It is the claimant's responsibility to provide clear and concise documentation to expedite the Architect's review. If the Substitution Request requires re-submission(s) due to the Claimant's inadequate documentation, no time extension will be allowed.

C. "Or Equal" / "Or Approved Equivalent": Claimant shall request a substitution in accordance with this Specification Section – SUBSTITUTION PROCEDURES.

D. The Project Manual employs the following methods of specifying products. Claimant shall conform to the directives below for this Project:
   1. Product, system or design specified only by reference standards:
      a. Select any product, system or design meeting reference standards.
   2. Product, system or design specified by naming several products, systems, designs and/or manufacturers:
      a. Select any product, system, design and/or manufacturer named.
   3. Product, system or design specified by naming several products, systems and/or manufacturers and reference standards:

a. Products, systems, designs and/or manufacturer names indicate products, systems, designs and/or manufacturers that (in the Architect's opinion) meets the reference standards.
b. Select any of the named manufacturer's products, systems or designs meeting the reference standards.

4. Product, system or design specified by naming one or more products, systems, designs and stating "or equal to", "or approved equivalent" with the specified products, systems or designs:
   a. Select product, system or design specified, "or approved equivalent".
5. Product, system or design specified by naming only one product, system or design:
   a. Select product, system or design specified, "or approved equivalent".
6. Product, system or design specified by naming only one product, system or design and followed by the statement "DISTRICT STANDARD – NO SUBSTITUTIONS":
   a. Provide product, system or design specified. No substitutions allowed.

E. Cost to Claimant for review of Substitution Request:
1. Each review of a Substitution Request by the Architect and/or it's Consultant(s) will be billed to the Claimant at an hourly rate of **$200.00** an hour, two hour minimum for each review, whether approved or rejected.
   a. Waiver of review fees:
      1) When the product has been discontinued or is unavailable.
         a) EXCEPTION: Where the claimant has failed to order in a timely manner and waits until the last minute, no consideration of the waiver of fees will be allowed; no time extensions will be allowed.
      2) When the Owner has requested a substitution.

1.3 SUBMITTALS

A. Submit in accordance with Specification Section - INSTRUCTIONS TO BIDDERS:

B. Content of Request:
1. Check made payable to DARDEN ARCHITECTS, INC. for the minimum two hour review period for **$400.00**, non-refundable.
   a. When additional time is required to review a substitution request beyond the first two hours, the Architect or its consultants will bill the claimant for the time expended in the review process.
2. Complete the attached **SUBSTITUTION REQUEST FORM** substantiating compliance of proposed substitution with Contract Documents. **NO OTHER FORMS WILL BE ACCEPTED.**
3. Attach to the SUBSTITUTION REQUEST FORM an itemized comparison of proposed substitution with product, system or design specified.
4. For products or systems, attach to the SUBSTITUTION REQUEST FORM:
   a. Product, system or design identification, including manufacturer's name and address.
5. Manufacturer's product information: MUST BE HIGHLIGHTED AND PROJECT SPECIFIC. SUBMITTALS NOT ADEQUATELY MARKED-UP ACCORDING TO PROJECT SPECIFICS WILL BE REJECTED:
   a. Literature including product, system or design description, performance and test data and reference standards.
   b. Samples.

c. Warranties.

6. For construction methods, attach to the SUBSTITUTION REQUEST FORM:
   a. Detailed description of proposed methods.
   b. Drawings illustrating methods.

C. Submit three (3) copies of Substitution Request including all attached data.

1.4 QUALITY ASSURANCE

A. Qualifications:
1. Product, system or design qualifications:
   a. In making a request for substitution, Claimant certifies that:
      1) Claimant has personally investigated proposed product, system or design, and determined that it is equal or superior in all respects to that specified.
      2) Claimant shall provide the same guarantee or warranty for substitution as for product, system or design specified.
      3) Claimant shall coordinate installation of accepted substitution into the Project, making such changes as may be required for the Project to be complete in all respects.
      4) Claimant waives all claims for additional costs related to substitution which subsequently become apparent for integrating the substituted product, system or design into the Project.
      5) Claimant waives all claims for time extension(s) due to improper documentation requiring re-submission(s) of a Substitution Request Review.

B. Regulatory Requirements:
1. In accordance with Specification Section - REGULATORY REQUIREMENTS, and the following:
   a. Products (and installation standards), systems or methods used for this Project shall comply with CARB standards in effect at the Project Site, and at the time of installation.

C. Acceptance of Substitutions:
1. Procedures:
   a. The Contract is based on products, systems or designs described in the Contract Documents.
   b. Architect will consider proposals submitted in accordance with time limits set within the Specification Section - INSTRUCTIONS TO BIDDERS.
   c. Architect is solely responsible for judging the acceptance of substitutions.
      1) Acceptance of a substitution does not waive the product manufacturer's responsibility for product liability. The Architect will judge (based on the substitution submission data) for function and use – product liability shall remain the responsibility of the product manufacturer.
   d. Substitute products, systems or designs shall not be used unless the substitutions have been specifically approved for this Project by the Architect.
      1) Substitute products, systems or designs that are related to structural, fire and life safety or access compliance shall not be used unless such substitution have been specifically approved for this Project by the Architect and the appropriate authority having jurisdiction.
2. Substitutions will not be considered if:

a. They are indicated or implied on product submittals in accordance with Specification Section - SUBMITTAL PROCEDURES. Substitutions are not Submittals, and must be reviewed and approved prior to being submitted as a Submittal.
b. Acceptance will require substantial revision of Contract Documents.
c. They are submitted after the date set for substitutions within this Contract, unless:
   1) The specified or drawing item that has been verified to be discontinued or is otherwise unavailable.
   2) The Owner proposes a cost savings for the product, system or method.
   3) The Owner proposes early occupancy, and the proposed substitution allows for that convenience.

PART 2 - PRODUCTS

NOT APPLICABLE

PART 3 - EXECUTION

3.1 SCHEDULES

A. Substitution Request Form:
   1. See the form attached to the end of this section.
   2. The attached form will be reproduced (and sequentially numbered by the Contractor after the award of the Contract) by the Claimant for any and all proposed substitutions.
   3. **NO OTHER FORMS WILL BE ACCEPTED.**

(Attachment)

SUBSTITUTION REQUEST FORM

TO: DARDEN ARCHITECTS, INC.
6790 N. West Avenue
Fresno, CA 93711

_____ Check attached for minimum review $388.00.

CHECK APPROPRIATE LINE:

_____ Substitution Request Prior to Bid (During Bid Period)
_____ Product or System Substitution
_____ Design Change Substitution

_____ Substitution Request After Award of the Contract
_____ Product or System Substitution
_____ Design Change Substitution

The Contractor Awarded the Contract for this Project shall assign sequential Substitution Request # below.
Leave blank if submitted during the Bid Period.

SUBSTITUTION REQUEST #_____

WE HEREBY SUBMIT FOR YOUR CONSIDERATION THE FOLLOWING PRODUCT OR METHOD AS SUBSTITUTION FOR THE SPECIFIED OR DRAWING ITEM FOR THIS PROJECT:

PROJECT: _____

SPECIFIED ITEM: _____

_____	_____	_____	_____
Specification Section #	Page #	Paragraph #	Description

OR
DRAWING ITEM: _____

_____	_____	_____
Drawing #	Detail Cut #	Description

PROPOSED CREDIT IF ANY: _____

PROPOSED SUBSTITUTION:
_____
_____
_____
_____

Attached data includes product description, specifications, drawings, photographs, performance and test data adequate for evaluation of the request; applicable portions of the data are clearly identified.

Attached data also includes a description of changes to the Contract Documents to which the proposed substitution will require for its proper installation.

The undersigned claimant certifies: (Modifications by the claimant to the following list is cause for automatic rejection without further review)

1. The proposed substitution does not affect dimensions shown on drawings or code requirements indicated.
2. The undersigned claimant shall compensate the Architect at a rate of **$200.00** an hour, two hour minimum for each review (check for **$400.00** must be attached to this form), for investigation and comments whether or not the request is approved for changes required to the building design, including engineering design, detailing, and construction costs caused by the requested substitution. The Architect is herein defined as any of those firms or individuals listed by reference on the Drawings, including all Consultants identified herein.
3. The proposed substitution will have no adverse affect on other trades, the construction schedule, or specified warranty requirements.
4. Maintenance and service parts will be locally available for the proposed substitution.
5. Attach information for a minimum of three projects where the substitution has been used locally within a 200 mile distance of this project, including names, addresses and telephone numbers of Owners who have accepted this product into their projects.
6. Attach all cost data with explanations if different from Specified or Drawing item. Include in that explanation a discussion on quality of proposed substitution and cost differential.
7. The undersigned claimant shall pay for any subsequent changes in incorporating the proposed substitution that were not apparent at the time of approval into the Work, including compensation to the Architect as described in item 2 above.

The undersigned Claimant(s) declares under penalty of perjury per the California Government Code Section 12650, et seq., that the claim of function, appearance and quality are equivalent or superior to the specified or drawing item, and further know and understand that submission for certification of a false claim may lead to fines, imprisonment and/or other severe legal consequences.

SUBMITTED BY CLAIMANT:

Signature_____
Firm_____

Address_____
_____
Date_____
Telephone_____

ADDITIONAL CLAIMANT SIGNATURE REQUIRED:

The Contractor or Construction Manager if submitted after the Award:

Signature_____
Firm_____

DESIGN CONSULTANT USE ONLY:

___ Check Not Attached - Not Accepted
___ Accepted
___ Accepted as Noted
___ Not Accepted
___ Received Past Time Period Allowed by Public Contract Code #3400.

By _____Date _____
Remarks_____

END OF SECTION

SECTION 012973 – SCHEDULE OF VALUES

PART 1 - GENERAL

1.1 RELATED DOCUMENTS

A. Refer to the FUSD Bid Package and General Conditions.

B. Drawings and general provisions of the Contract, including General and Supplementary Conditions and other Division 01 Specification Sections, apply to this Section.

1.2 SUMMARY

A. This section includes the administrative and procedural requirements necessary to prepare and process the following:
   1. Schedule of Values
      a. Schedule of Bid Values.
      b. Complete Schedule of Values.
   2. Unit Price Schedules.

B. Related Requirements: The following Project Manual Sections contain requirements that relate to this section:
   1. Architectural Division 01 General Requirements:
      a. 011113-SUMMARY OF WORK.
      b. 012113-ALLOWANCES
      c. 012300-ALTERNATES.
      d. 013216-CONSTRUCTION SCHEDULE.
      e. 013300-SUBMITTAL PROCEDURES.
      f. 014100-REGULATORY REQUIREMENTS

1.3 DEFINITIONS

A. Activity: A discrete part of a project that can be identified for planning, scheduling, monitoring and controlling the construction project. Activities included in a Schedule of Values and Payment Request consume cost for time and resources.

B. Activity Code: Identifies each activity so as to be organized, group and sorted into Sub-Schedules, Areas of Work, and Reports.

C. Allowances: Contract amounts allocated for specific activities of the project as identified in the contract documents.

D. Application for Payments: A statement furnished by the Contractor allocating portions of the Contract Sum to various portions of the Work stipulating the amount of work that has been completed to date.

E. Contingency: Contract amounts allocated for non-specific activities, to cover changes in the contract document work, unforeseen conditions and added scope of work to the project.

F. Major Scope: Significant portions of work identified as, but not limited to, Base Bid, Alternate Bids, and Construction Phases, and Funding Criteria.

G. Responsible Party: Entity that is responsible for performing the work of each activity as identified, but not limited to, General Contractor, and Sub-Contractor, second and tertiary tier Sub-Contractors, Manufacturers, Fabricators and Vendors.

H. Schedule of Values: A statement furnished by the Contractor allocating portions of the Contract Sum to various portions of the Work.

I. Scope Type: Segments of work identified as, but not limited to, Building ID, On-Site, and Off-Site.

J. Sub-Schedules: Separated activities identified as part of the same element of work and arranged to show correlation with related elements.

1.4 SUBMITTALS

A. General:
1. Submit in accordance with Specification Section - SUBMITTAL PROCEDURES.

B. Format for Submittals: A tabular form type schedules.
1. Provide a working electronic copy of schedule file.
a. Provide schedule files on Compact Disc (CD) or Digital Versatile Disc (DVD) (WINDOWS Formatted Disks) in a form that can be reviewed and used by the Owner, and Architect.
2. Provide PDF electronic copy of schedule file.
3. Provide **(Two)** paper copies of schedules.
a. Sheet size shall be of adequate size to clearly show the required information for the entire construction period.
b. All required documentation shall have the Submittal number posted in the upper-right hand corner of the page.

C. Assurance/Control Submittals:
1. Schedule of Values.
a. Schedule of Bid Values.
1) Submit within **fourteen (14)** days after the Award of Contract.
b. Complete Schedule of Values.
1) Submit at the earliest possible date, but no later than **fifteen (15)** days prior to the date scheduled for submittal of initial Application for Payment.
2. Application for Payment and Certification.
a. Application for Payment and Certification Forms.
1) Submit along with the Complete Schedule of Values submittal.
b. Initial Application for Payment.
1) Submit **seven (7)** days prior to due date.
c. Application for Payment for Progress of Work.
1) Submit by the Insert day of the month.
d. Application for Payment at Substantial Completion.
1) Submit after Architect issues the Certificate of Substantial Completion.

e. Final Application for Payment.
   1) Submit after competing Project Closeout requirements.

1.5 SYSTEM DESCRIPTON

A. General:
1. The Architect considers the project Schedule of Values requirements to be significant to both the Contractor and the Owner. The development, submittal, and acceptance of the Schedule of Values, (Bid and Complete), and subsequent development and maintenance of the Application for Payments must be given high priority.
   a. No payment will be made without the Architect's review and acceptance of the Schedule of Values.
   b. Progress payments may be withheld in whole or part should the Contractor fail to comply with the requirements of this section.
   c. No separate payment will be made to the Contractor for any of the requirements of this section. All such costs shall be part of the Contractor's planned project overhead costs included in its bid.

B. Performance Requirements:
1. Schedule of Bid Values: The Schedule of Bid Values shall be a breakdown of the Bid(s) submitted in the Bid Proposal and shall include all work that was bid on, regardless the scope of work awarded for construction. The breakdown shall be sufficient for the use by the Owner and Owner's Consultants to evaluate and determine cost of major scopes of work and the value of other owner agreements that are associated with the dollar value of the bid proposal.
   a. Refer to Specification Section – SUMMARY OF WORK.
   b. Refer to Specification Section – ALLOWANCES.
   c. Refer to Specification Section – ALTERNATES.
2. Complete Schedule of Values: Breakdown of the Contract Sum by specific line-item values, based on the individual activities in the Baseline Project Construction Schedules and to be the basis for the development of the Application for Payment.
   a. Refer to Specification Section – CONSTRUCTION SCHEDULES.
3. Application for Payments: Shall be derived from Baseline Project Construction Schedule utilizing the costs in the Complete Schedule of Values, and from subsequent Project Construction Schedule Updates, reflecting the Work performed as of planned and actual dates.
   a. Refer to Specification Section – CONSTRUCTION SCHEDULES.

1.6 QUALITY ASSURANCE

A. Qualifications:
1. The Contractor must have the capacity and capability of supporting the project by producing schedule-related data within **two (2)** days of request by the Architect, or Owner.

B. Regulatory Requirements:
1. In accordance with Specification Section - REGULATORY REQUIREMENTS.

PART 2 - PRODUCTS

2.1 GENERAL REQUIREMENTS

A. Coordination:
1. Coordinate preparation of the Schedule of Bid Values with the submitted Bid Proposal and reflect the major scope of work breakdown described in Specification Section – SUMMARY OF WORK and **Specification Section – ALTERNATES,** .
2. Coordinate preparation of the Complete Schedule of Values with the preparation of the Baseline Project Construction Schedule. Refer to Specification Section – CONSTRUCTION SCHEDULES.
3. Correlate line items in the Complete Schedule of Values with other required administrative forms and schedules, including, but not limited to, the following:
   a. Application for Payment forms with continuation sheets.
   b. Submittals Schedule.
   c. Items required to be indicated as separate activities in the Baseline Project Construction Schedule.

B. Project Information:
1. Identification: Include the following Project Identification on all Schedule of Values and Application for Payment.
   a. Project Name and Location.
   b. Name of Owner and Address.
   c. Name of Architect and Address.
   d. Architect's Project Number.
   e. Contractor's Name and Address.
   f. Submittal Date.

2.2 SCHEDULE OF BID VALUES

A. Format:
1. Arrange the Schedule of Bid Values in tabular form.
   a. Provide and identify separate columns to indicate the following ;
      1) SPECIFICATION SECTION.
      2) DESCRIPTION.
      3) RESPONSIBLE PARTY.
      4) MAJOR SCOPE.
      5) DOLLAR VALUE.
      6) PERCENTAGE OF THE CONTRACT SUM.
   b. Provide and identify separate line-items to indicate the following;
      1) Activity.
      2) Contract Conditions.
      3) Allowance(s).
      4) Contingency (ies).
      5) Grand Totals.

B. Content:

1. SPECIFICATION SECTION: Use the specification section number in the Project Manual Table of Contents to identify and establish each line-item.
2. DESCRIPTION: Provide a description of the work for each line-item associated with the specification section and responsible party.
3. RESPONSIBLE PARTY: Identify the responsible party for performing the work of each line-item associated with the specification section and description.
4. MAJOR SCOPE: Designate Major scope of work as identified and itemized in BID PROPOSAL.
   a. Provide separate columns for each Major Scope of Work identified.
5. DOLLAR VALUE: Sub-Total of the cost for each activity line-item, with the amounts rounded to the nearest dollar.
   a. Assign a dollar value for each line-item to each Major Scope of the project excluding General Conditions, General Requirements and General Contractor's Overhead and Profit.
6. PERCENTAGE OF THE CONTRACT SUM: Dollar Value as a percentage of the Contract Sum to the nearest one-hundredth percent, adjusted to total one hundred percent.
7. Activity: Provide at least one activity item-line for the work in each Specification Section.
   a. Provide separate activity line items for each Contractor or Subcontractor providing work under the same specification section.
8. Contract Conditions:
   a. Identify and provide separate activity line-item for cost items that are directly related to Division 01 - GENERAL REQUIREMENTS.
   b. Identify and provide separate activity line-item for cost items that are directly related to Division 00 - CONDITIONS OF THE CONTRACT.
9. Allowances: Identify and provide separate activity line-item for each Allowance that is assigned for specific work in any specification section. Dollar value to exclude General Contractor's Overhead and Profit.
10. Contingencies: If required, identify and provide separate activity line-item for each Contingency that is not assigned to specific work in any specification section. Dollar value to exclude General Contractor's Overhead and Profit.
    a. If required, provide separate line items for Owner Contingency and Contractor Contingency.
11. Grand Total: Summation of dollar value for each column equal to the Bids received.

2.3 COMPLETE SCHEDULE OF VALUES

A. Format:
1. Provide a comprehensive, fully developed, detailed Complete Schedule of Values in tabular form.
   a. Provide and identify the following separate columns to indicate the following for each item listed;
      1) SPECIFICATION SECTION.
      2) ACTIVITY CODE.
      3) DESCRIPTION.
      4) RESPONSIBLE PARTY.
      5) MAJOR SCOPE.
      6) SCOPE TYPE.
      7) DOLLAR VALUE.
   b. Provide and identify separate line-items to indicate the following;

1) Activity.
2) Sub-Schedules.
3) Contract Conditions.
4) Allowance(s).
5) Purchase Contracts (if applicable).
6) Contingency (ies).
7) Grand Totals.

B. Content:
1. SPECIFICATION SECTIONS: As described in the Schedule of Bid Values.
2. ACTIVITY CODE: Provide the Activity Identification Code for each line-item indicated as separate activities in the Baseline Project Construction Schedule.
3. DESCRIPTION: As described in the Schedule of Bid Values
4. RESPONSIBLE PARTIES: As described in the Schedule of Bid Values.
5. MAJOR SCOPE: As described in the Schedule of Bid Values.
6. SCOPE TYPE: Identify each line-item that is associated with a segment of work.
7. DOLLAR VALUE: As described in the Schedule of Bid Values.
8. Activity: As described in the Schedule of Bid Values and the following;
   a. Expand to include entities, which is responsible for performing the work of each activity, identified as, but not limited to, General Contractor, and Sub-Contractor, second and tertiary tier Sub-Contractors, Manufacturers, Fabricators and Vendors.
   b. Expand to include separate activity line-items for cost items that are directly related to Division 01 - GENERAL REQUIREMENTS and are direct cost of actual work-in-place. Such items shall be, but not limited to, the following;
      1) Submittals,
      2) Field Engineering
      3) Operation and Maintenance Manuals.
      4) Demonstration and Training.
9. Sub-Schedules:
   a. Major Scope of Work: Provide Sub-Schedules for line-items that are associated with each designated major scope of work as identified in Bid Proposal, and defined in Specification Section – SUMMARY OF WORK and **Specification Section – ALTERNATES**, that requires itemization of each line-item value.
   b. Scope Type: Provide Sub-Schedules for line-items that are associated with each specific scope type.
      1) Building Costs: Detailed cost breakdown of all cost items that are directly related to the Project per Building.
         a) When the Project Building(s) is of sufficient size to warrant, break the building costs down into areas of work compatible with the Contractor's Means and Methods for construction sequences.
         b) Building areas may consist of floor and roof levels and partial floor and roof levels.
      2) Project Site Costs: Detailed cost breakdown of all cost items that are directly related to the Project Site.
         a) When the Project Site is of sufficient size to warrant, break the site costs down into areas of work compatible with the Contractor's Means and Methods for construction sequences.
10. Contract Conditions: As defined in the Schedule of Bid Values and the following;
   a. Expand to include separate activity line-items for cost items that are directly related to Division 01 - GENERAL REQUIREMENTS and are not direct cost of actual work-in-place. Such items shall be, but not limited to, the following;

1) Temporary Facilities.
2) Field Supervision.
3) Project Identification Sign.
4) Project Closeout Requirements.
a) Punch List Activities, and Project Record Documents.

b. Expand to include separate activity line-item for cost items that are directly related to Division 00 - CONDITIONS OF THE CONTRACT REQUIREMENTS and are not direct cost of actual work-in-place. Such items shall be, but not limited to, the following;
1) On-Site Facilities and Supervision.
2) General Contractor's Overhead and Profit.
3) Performance and Labor and Material Bonds.

11. Allowances: As defined in the Schedule of Bid Values.
12. Purchase Contracts: Provide separate line-item in the Schedule of Values for each Purchase Contract, showing the value of the Purchase Contract.
13. Contingencies: As defined in the Schedule of Bid Values.
14. Grand Total: As defined in the Schedule of Bid Values.

PART 3 - EXECUTION

3.1 APPLICATION AND CERTIFICATION FOR PAYMENT

A. General Requirements:
1. Coordination: Coordinate the preparation of the Application for Payment with the preparation of the **Complete Schedule of Values** and **Project Construction Schedule**.
a. Entries shall match data on the **Complete Schedule of Values** and **Project Construction Schedule** and **Project Schedule Updates**, if revisions were made.
2. Application and Certification for Payment Forms: Use forms accepted by the Architect and Owner for Applications for Payment.
a. Form shall be based on AIA Document G702 Application and Certification for Payment and AIA Document G703 Continuation Sheets.
b. Submit form for acceptance with initial submittal of **Complete Schedule of Values**.
3. Application Preparation: Complete every entry on form. Notarize and execute by a person authorized to sign legal documents on behalf of the Contractor. Project Inspector or Architect will return incomplete applications without action.
a. Use signed and notarized original copies of each Application for Payment to Architect by a method ensuring receipt. One copy shall include Waivers of Lien and similar attachments if required.
4. Identification: Include the following Project Identification on all Application for Payment:
a. Project Name and Location.
b. Owner Name.
c. Architect's Project Number.
d. Contractor Name and Address.
e. Application Number.
f. Application Date.
g. Period To:

B. Format.
1. Provide a comprehensive, fully developed, detailed Application for Payment with Continuation Sheets in tabular form.
   a. Provide and identify the following separate columns to indicate the following for each item listed;
      1) ACTIVITY CODE.
      2) DESCRIPTION.
      3) SCHEDULED DOLLAR VALUE.
      4) WORK COMPLETED.
         a) FROM PREVIOUS APPLICATION.
         b) THIS PERIOD.
      5) TOTAL COMPLETED.
      6) PERCENTAGE OF COMPLETION.
      7) BALANCE TO FINISH.
      8) RETAINAGE.
   b. Provide and identify separate line-items to indicate the following the following;
      1) Activity.
      2) Sub-Schedules.
      3) Contract Conditions.
      4) Allowance(s).
      5) Purchase Contracts (if applicable).
      6) Contingency (ies).
      7) Grand Totals.
      8) Change Orders.

C. Content:
1. ACTIVITY CODE: Provide the Activity Identification Code for each line-item of Work as indicated as separate activities in the **Project Construction Schedule**
2. DESCRIPTION OF WORK: Provide the same description as indicated in the Schedule of Values for each line item.
3. SCHEDULED DOLLAR VALUE: Provide the same amount as indicated in the Schedule of Values for each line item.
4. WORK COMPLETED: with the following sub-columns.
   a. FROM PREVIOUS APPLICATION, include Dollar Value for work completed in previous Application for Payment, whether or not payment has been received.
   b. THIS PERIOD, include only the Dollar Value for work completed at the time of Application for Payment.
5. TOTAL COMPLETED: The sum Dollar Value of Work Completed and Materials Presently Stored.
6. PERCENTAGE OF COMPLETION: The percentage value of the total Work Completed and the Stored to Date divided by the Scheduled Value.
7. BALANCE TO FINISH: The dollar value of the Scheduled Value minus the Total Completed.
8. RETAINAGE: The dollar value of the percentage of retention per contract agreement.
9. Activity:
   a. Use the Complete Schedule of Values and Baseline Project Schedule as a guide to establish activity line-items for the Application for Payment.
   b. Include separate activity line-items when a work activity is separated into stages and requires separate payments for each stage.

c. Provide separate line-items for each part of the Work where separate payments will be requested including, but not limited to, submittals, materials, equipment, fabrication and installation.
d. Provide separate line items for materials stored but not yet installed, where separate payments will be requested.

10. Sub-Schedules: As described in the Complete Schedule of Values.
11. Contract Conditions: As described in the Complete Schedule of Values.
12. Allowances: As described in the Complete Schedule of Values.
13. Purchase Contracts: As described in the Complete Schedule of Values
    a. Indicate Owner payments or deposits, if any, and balance to be paid by the Contractor
14. Contingencies: As described in the Complete Schedule of Values.
15. Grand Totals: As described in the Complete Schedule of Values.
16. Change Orders:
    a. Include amounts of approved Change Orders or Construction Change Directives issued before the last day of construction period covered by application.

D. Supplemental Information:
1. Materials Stored: Include in Application for Payment the amounts applied for materials or equipment purchased or fabricated and stored, but not yet installed.
    a. Differentiate between items stored on-site and items stored off-site.
    b. Provide certificate of insurance or Bonded Warehousing, evidence of transfer of title to Owner, and consent of surety to payment, for stored materials.
    c. Provide supporting documentation that verifies amount requested, such as paid invoices. Match amount requested with amounts indicated on documentation; do not include overhead and profit on stored materials.
    d. Provide summary documentation for stored materials indicating the following:
        1) Materials previously stored and included in previous Applications for Payment.
        2) Work completed for this Application utilizing previously stored materials.
        3) Additional materials stored with this Application.
        4) Total materials remaining stored, including materials with this Application.
2. Waivers of Mechanic's Lien: With each Application for Payment, submit Waivers of Mechanic's Liens from subcontractors, sub-subcontractors, and suppliers for construction period covered by the previous application.
    a. Submit partial waivers on each item for amount requested in previous application, after deduction for retainage, on each item.
    b. When an Application shows completion of an item, submit conditional final or full waivers.
    c. Owner reserves the right to designate which entities involved in the Work must submit waivers.
    d. Submit final Application for Payment with or preceded by conditional final waivers from every entity involved with performance of the Work covered by the application who is lawfully entitled to a lien.
    e. Waiver Forms: Submit waivers of lien on forms executed in a manner acceptable to Owner.

E. Initial Application for Payment: Administrative actions and submittals that must precede or coincide with submittal of first Application for payment include the following:
1. List of Subcontractors.
2. Schedule of Values.
3. Contractor's Construction Schedule (preliminary if not final).

4. Products List (preliminary if not final).
5. Submittal Schedule (preliminary if not final).
6. List of Contractor's Staff Assignments.
7. List of Contractor's Principal Consultants.
8. Copies of authorizations and licenses from authorities having jurisdiction for performance of the Work.
9. Initial Progress Report.
10. Report of Preconstruction Conference.

F. Application for Payment for Progress of Work:
1. Each Application for Payment shall be consistent with previous applications and payments as certified by the Project Inspector, Architect, and paid for by the Owner.
2. Payment Applications shall be submitted to the Architect by the date established by the Owner. The maximum period of time covered by each Application for Payment is for one month.
3. Payments Applications shall be updated to reflect any revised activity in the Project Schedule Updates.

G. Application for Payment at Substantial Completion: After the issuing of the Certificate of Substantial Completion, submit an Application for Payment showing 100 percent completion for portions of the Work claimed as substantially complete.
1. Include documentation supporting the claim that the Work is substantially complete and a statement showing an accounting of changes to the Contract Sum.
2. This application shall reflect Certificates of Partial Substantial Completion issued previously for Owner occupancy of designated portions of the Work.

H. Final Application for Payment: Submit Final Application for Payment with releases and supporting documentation not previously submitted and accepted, including, but not limited, to the following:
1. Evidence of completion of Project closeout requirements.
2. Insurance certificates for products and completed operations where required and proof that taxes, fees, and similar obligations were paid.
3. Updated final statement accounting for final changes to the Contract Sum.
4. "Contractor's Affidavit of Payment of Debts and Claims".
5. "Contractor's Affidavit of Release of Liens".
6. "Consent of Surety to Final Payment".
7. Evidence that claims have been settled.
8. Final meter readings for utilities, a measured record of stored fuel, and similar data as of date of Substantial Completion or when Owner took possession of and assumed responsibility for corresponding elements of the Work.
9. Final liquidated damages settlement statement.

END OF SECTION

SECTION 013113 – CONTRACTOR'S "PROJECT MANAGEMENT" AND COORDINATION

Refer to FUSD General Conditions and General Requirements, 01 33 23.13 Coordination of Work, Coordination of Drawings.

END OF SECTION

INTENTIONALLY LEFT BLANK

SECTION 013216 – CONSTRUCTION SCHEDULES

Refer to FUSD General Conditions and General Requirements, 01 32 00 Construction Progress Documentation, 01 32 16.01 Progress Schedule.

END OF SECTION

INTENTIONALLY LEFT BLANK

SECTION 013226 – FORMS AND REPORTS

PART 1 - GENERAL

1.1 SUMMARY

A. This Section includes the following:
   1. Contractor to provide all Forms and Reports as required by the Architect for Administrative Procedures and other related items necessary to document the Project as required by the Contract Documents, including but not limited to those forms provided under this specification section.
   2. CalGREEN Forms:
      a. Contractor shall provide all California Green Building Standards Code Certification Worksheets and other related items necessary to document the Project as required by the AHJ, including, but not limited to, those forms provided under this specification section.
         1) Obtain the latest documents from the California Building Standards Commission; revisions may have been made since the publication of this Project Manual.

B. Related Sections: The following Project Manual Sections contain requirements that relate to this section:
   1. ALL DIVISION 00 SPECIFICATION SECTIONS.
   2. ALL DIVISION 01 SPECIFICATION SECTIONS.
   3. ALL SPECIFICATION SECTIONS IN THE FACILITY CONSTRUCTION SUBGROUP.
   4. ALL SPECIFICATION SECTIONS IN THE FACILITY SERVICES SUBGROUP.
   5. ALL SPECIFICATION SECTIONS IN THE SITE AND INFRASTRUCTURE SUBGROUP.

1.2 SUBMITTALS

A. Submit in accordance with Specification Section - SUBMITTAL PROCEDURES:
   1. Forms and Reports as attached to this section when required by the Architect.

1.3 QUALITY ASSURANCE

A. Regulatory Requirements:
   1. In accordance with Specification Section - REGULATORY REQUIREMENTS.

PART 2 - PRODUCTS

NOT APPLICABLE

PART 3 - EXECUTION

3.1 SCHEDULES

A. Listing of Architect required Forms and Reports No. of Pages:
1. 01 32 26.01-DAILY SUPERINTENDENT'S REPORT 2
2. 01 32 26.02-SUBCONTRACTOR'S DAILY REPORT 1
3. 01 32 26.03-SHOP DRAWING AND SUBMITTAL TRANSMITTAL 1
4. 01 32 26.04-REQUEST FOR INFORMATION (RFI) 1
5. 01 32 26.05-SUPPLEMENTAL INSTRUCTIONS (SI) 1
6. 01 32 26.06-REQUEST FOR PROPOSAL (RFP) 1
7. 01 32 26.07-CONSTRUCTION CHANGE DIRECTIVE (CCD) 1
8. 01 32 26.08-CHANGE ORDER REQUEST REVIEW (COR) 2
   a. (Review form provided by the Contractor is subject to review and comments by the Owner and Architect).
9. 01 32 26.09-CHANGE ORDER (CO) 1
10. 01 32 26.10-FRAGNET SUBMITTAL FORM 1
11. 01 32 26.11-APPLICATION FOR PAYMENT (AP) 1
12. 01 32 26.12-CONTRACTOR'S TESTING / INSPECTION REQUEST FORM 1
13. 01 32 26.13-CONTRACTOR'S "DEVIATION NOTICE" INSPECTION REPORT FORM 1
14. 01 32 26.14-CONTRACTOR'S FINAL INSPECTION REQUEST FORM 1
15. 01 32 26.15-CONTRACTOR'S PUNCHLIST INSPECTION REQUEST FORM 1
16. 01 32 26.16-CONTRACTOR'S PUNCHLIST 1
17. Periodic field reports issued by the Architect and Engineers.
18. Contractor's Punch List Response and Correction form is required for each Punch List Review report, citing the issuing Punch List Review format number(s).
19. Completed Contractor's Punch List and Final Inspection Reports issued by the Architect, Engineers and the Owner.
20. See the attached Forms and Reports suitable for reproduction by the Contractor or Subcontractor.

B. Listing of California Green Building Standards Code Certification Worksheets:
1. SOILS LOSS PREVENTION PLAN CHECKLIST.
2. WORKSHEET (WS-4) FIXTURE FLOW RATE (Prescriptive Method).
3. CONSTRUCTION WASTE MANAGEMENT (CWM) PLAN WORKSHEET (Sample).
4. CONSTRUCTION WASTE MANAGEMENT (CWM) WORKSHEET (Sample).
5. CONSTRUCTION WASTE MANAGEMENT (CWM) ACKNOWLEDGMENT (Sample).
6. FINISH MATERIALS CERTIFICATE - ADHESIVES & SEALANTS.
7. FINISH MATERIALS CERTIFICATE - ARCHITECTURAL COATINGS.
8. FINISH MATERIALS CERTFICATE - COMPOSITE WOOD PRODUCTS.
9. FINISH MATERIALS CERTIFICATE - FLOORING.

END OF SECTION

(Attachments)

GENERAL CONTRACTOR'S
DAILY SUPERINTENDENT'S REPORT

(JOB NO./REPORT NO.) _____ (DATE/DAY) _____

(JOB NAME) _____ WEATHER DESCRIPTION _____

(WORK SHIFT) / FROM / TO _____ (PROJECT MANAGER/SUPERINTENDENT) _____

PM/	ENGR/	CARPENTERS			LABORERS		CEM FINISHERS			OPER ENGR			
SUPT	TK	FMAN	JRMAN	APP	FMAN	LAB	FMAN	JRMAN	APP	JRMAN	APP	OTHER	TOTAL

CONCRETE: CY TODAY:_____ LOCATION: _____ CY TO DATE: _____

WORK SUMMARY:

DELAYS / WORK RELEASED BY OWNER:

CHANGE ORDERS / EXTRA WORK ORDERS:

INSTRUCTIONS FROM ARCHITECT / OWNER:

MATERIALS / EQUIP. DELIVERED TO JOB:

INSPECTIONS / TESTS PERFORMED

SAFETY / ACCIDENTS:

MAJOR EQUIP. ON SITE:

BACKSIDE OF GENERAL CONTRACTOR'S REPORT

SUBCONTRACTORS ON JOB	NO. OF MEN	FOREMAN'S NAME	WORK DESCRIPTION / LOCATION

MAJOR EQUIPMENT ON SITE:

BACK CHARGES:

REMARKS:

SUBCONTRACTOR'S DAILY REPORT

PROJECT: DATE:

SHIFT TIME FOREMAN: WEATHER:

WORK DESCRIPTION AND LOCATION:

SUB-SUBCONTRACTOR	CREW SIZE	CRAFT	WORK DESCRIPTION / LOCATION

DELAYS:

CHANGE ORDERS / EXTRA WORK ORDERS:

INSTRUCTIONS RECEIVED FROM GC:	TESTS / INSPECTIONS PERFORMED:
MATERAL / EQUIPMENT DELIVERIES:	MAJOR EQUIPMENT ON SITE:

SAFETY / ACCIDENTS:

SHOP DRAWING AND SUBMITTAL TRANSMITTAL

DESCRIPTION:

SUBMITTAL NO.:

SPEC SECTION:

ARCHITECT:
Darden Architects, Inc.
6790 North West Avenue
Fresno, California 93711

PROJECT:

CONTRACTOR:

SUPPLIER:

Substitution: Yes: ☐ **DSA Approval Req'd**

DATE RECEIVED: _____ **NO. RECEIVED:** _____ **DATE RETURNED:** _____

Contractor Remarks:

Other Required Information: CPM Activity / Submittal Task No.: _____

Early Start (ES) Date: _____ Late Finish (LF) Date: _____

WARRANTY: ☐ **O and M MANUALS** ☐ Early Finish (EF) Date: _____ Scheduled Float Time: _____

DESIGN CONSULTANT'S REVIEW:

TRANSMITTED BY ARCHITECT TO: _____ DATE RETURNED: _____
DATE SENT: _____
NO. SENT: _____

Consultants Remarks:

ACTION:

☐ NO EXCEPTION TAKEN RELATIVE TO DESIGN
☐ NO EXCEPTION TAKEN WITH MODIFICATION NOTED
☐ AMEND AS NOTED AND RESUBMIT
☐ REJECTED AND RESUBMIT
☐ SEE ATTACHED LETTER

ARCHITECT'S REVIEW:

Architects Remarks:

ACTION:

☐ NO EXCEPTION TAKEN RELATIVE TO DESIGN
☐ NO EXCEPTION TAKEN WITH MODIFICATION NOTED
☐ AMEND AS NOTED AND RESUBMIT
☐ REJECTED AND RESUBMIT

Approved Substitution ☐

COPIES TO:

DATE RETURNED: _____

Contractor: **Owner:** **Inspector:** **File:** **Other:**

REQUEST FOR INFORMATION

RFI No.:

To: **Darden Architects, Inc.**
6790 North West Avenue
Fresno, California 93711

Date:

Respond By:

Architect Project No.

Attn:

Project:

INFORMATION REQUESTED:

test

Cost Impact: None: _____ Signature: _____

Schedule Impact: None: _____ Days Pages Attached: _____

Trade/Contractor: Schedule Task No/Item:

The Work shall be carried out in accordance with the following supplemental instructions issued in accordance with the Contract Documents without change in the Contract Sum or Contract Time. Proceeding with the Work in accordance with these instructions indicates your acknowledgement that there will be no change in the Contract Sum or Contract Time.

If the Contractor considers that this supplemental instruction requires a change in the Contract Sum or Contract Time, the Contractor shall not proceed with this Work and shall promptly submit an itemized proposal to the Architect for doing this work. If your proposal is found to be satisfactory and in order, this supplemental instruction will be superseded by a Construction Change Directive.

Refered To: Refered Date: Return Date:

SUPPLEMENTAL INSTRUCTIONS:

Consultant's Signature: _____ Architect's Signature: _____

Date: _____ Date _____

Copy: ☐ Owner ☐ Inspector ☐ Testing Lab ☐ Structural ☐ Mech. ☐ Elec ☐ File ☐ Other Pages Attached: _____

SUPPLEMENTAL INSTRUCTIONS

PROJECT:

SUPPL. INST. NO.:

DATE OF ISSUANCE:

OWNER:

CONTRACT DATE:

NOTICE TO PROCEED:

CONTRACTOR:

Architect Project No.:
DSA Appl. No.:
DSA File No.:
OPSC Appl. No.:
OSHPD No.:

The Work shall be carried out in accordance with the following supplemental instructions issued in accordance with the Contract Documents without change in the Contract Sum or Contract Time. Proceeding with the Work in accordance with these instructions indicates your acknowledgement that there will be no change in the Contract Sum or Contract Time.

If the Contractor considers that this supplemental instruction requires a change in the Contract Sum or Contract Time, the Contractor shall not proceed with this Work and shall promptly submit an itemized proposal to the Architect for doing this work. If your proposal is found to be satisfactory and in order, this supplemental instruction will be superceded by a Construction Change Directive.

Description:

Trade/Contractor:

Schedule Task No/Item:

Attachments:

Darden Architects, Inc.

Issued By:

Architect

☐ OWNER ☐ CONTRACTOR ☐ INSPECTOR ☐ TESTING LAB ☐ STRUCTURAL ☐ MECHANICAL ☐ ELECTRICAL ☐ OTHER

REQUEST FOR PROPOSAL

PROJECT:

REQUEST FOR PROPOSAL NO.:

DATE OF ISSUANCE:

OWNER:

CONTRACT DATE:

NOTICE TO PROCEED:

CONTRACTOR:

Architect Project No.:
DSA Appl. No.:
DSA File No.:
OPSC Appl. No.:
OSHPD No.:

Please submit an itemized proposal for change in the Contract Sum and Contract Time for proposed modifications to the Contract Documents described herein. Submit proposal promptly or notify the Architect in writing of the date on which you anticipate submitting your proposal.

This is not a Change Order, Construction Change Directive, or a direction to proceed with the Work described in the proposed modifications.

Description:

Attachments

Darden Architects, Inc.

ISSUED BY:

_____

Architect

☐ OWNER ☐ CONTRACTOR ☐ ARCHITECT ☐ CONSULTANT ☐ INSPECTOR ☐ OTHER

CONSTRUCTION CHANGE DIRECTIVE

PROJECT:

DIRECTIVE NO.:

DATE OF ISSUANCE:

OWNER:

CONTRACT DATE:

NOTICE TO PROCEED:

CONTRACTOR:

Architect Project No.:
DSA Appl. No.:
DSA File No.:
OPSC Appl. No.:
OSHPD No.:

You are hereby directed to make the following change(s) in this Contract:

CONTRACT ADJUSTMENT

1. The proposed basis of adjustment to the Contract Sum of Guaranteed Maximum Price is:

   ☐ Lump Sum $0.00

   ☐ Unit Price of $0.00

   ☐ As provided for in General Conditions and the Supplemental Conditions of the contract.

   ☐ As Follows:

2. The Contract Time is proposed to (be adjusted). The proposed adjustment, if any, is increase of _____ days)

When signed by the Qwner and Architect and received by the Contractor, this document becomes effective IMMEDIATELY as a Construction Change Directive (CCD), and the Contractor shall proceed with the change(s) described above.

Signature by the Contractor indicates the Contractor's agreement with the proposed adjustments in Contract Sum and Contract Time set forth in this Construction Change Directive.

ARCHITECT	OWNER	CONTRACTOR
Darden Architects, Inc.		
6790 North West Avenue		
Fresno, California 93711		
By:	By:	By:
Date:	Date:	Date:

☐ OWNER ☐ CONTRACTOR ☐ ARCHITECT ☐ CONSULTANT ☐ INSPECTOR ☐ OTHER

darden architects

6790 North West Avenue
Fresno, California 93711
Tel: 559.448.8051
Fax: 559.446.1765
www.dardenarchitects.com

CHANGE ORDER REQUEST REVIEW

PROJECT:

CHANGE ORDER REQUEST NO.:

DATE OF ISSUANCE:

OWNER:

CONTRACTOR:

Architect Project No.:
DSA Appl. No.:
DSA File No.:
OPSC Appl. No.:
OSHPD No.:

DESCRIPTION OF PROPOSED CHANGE:

Scope:

Necessary for:

DESIGN CONSULTANT'S REVIEW:

Date Sent:
Referred To:
Date Returned:

ACTION:

☐ NO EXCEPTION TAKEN RELATIVE TO COST
☐ NO EXCEPTION TAKEN RELATIVE TO TIME
☐ AMEND AS NOTED AND RESUBMIT
☐ REJECTED

Consultants Remarks:

ARCHITECT'S REVIEW:

Date Returned:

ACTION:

☐ NO EXCEPTION TAKEN RELATIVE TO COST
☐ NO EXCEPTION TAKEN RELATIVE TO TIME
☐ AMEND AS NOTED AND RESUBMIT
☐ REJECTED

Architects Remarks:

Attachments:

REVIEWED:

Darden Architects, Inc.
6790 North West Avenue
Fresno, California 93711

APPROVED:

Architect : **Date :** **Owner :** **Date :**

The Architect is hereby directed to instruct the Contractor to make the above changes in the Project and to include these changes in a subsequent Change Order:

☐ OWNER ☐ CONTRACTOR ☐ INSPECTOR ☐ STRUCTURAL ☐ MECHANICAL ☐ ELECTRICAL ☐ OTHER

CHANGE ORDER REQUEST NO.

Architect Project No.:

CHANGE ORDER REQUEST - BREAKDOWN WORKSHEET

WORK DELETED:

Contractor				
Materials	$0.00			
Equipment	$0.00			
Labor	$0.00			
Material, Equipment, & Labor		$0.00		
TOTAL:				**$0**

ADDITIONAL WORK PERFORMED BY SUB-CONTRACTOR

Sub-Contrator				
Materials	$0.00			
Equipment	$0.00			
Labor	$0.00			
Material, Equipment, & Labor		$0.00		
Overhead 01 32 26.03		$0.00		
Profit 01 32 26.03		$0.00		
Sub-Total:			$0.00	
Contractor				
Overhead 01 32 26.03			$0.00	
Profit 01 32 26.03			$0.00	
TOTAL:				**$0.00**

ADDITIONAL WORK PERFORMED BY CONTRACTOR

Contractor				
Materials	$0.00			
Equipment	$0.00			
Labor	$0.00			
Material, Equipment, & Labor		$0.00		
Overhead 01 32 26.03		$0.00		
Profit 01 32 26.03		$0.00		
TOTAL:				**$0.00**

TOTAL COST: **$0.00**

TOTAL COST: **$0.00**

TOTAL DAYS: **0**

ARCHITECTURAL ADMINISTRATIVE FEES:

Proposal Request Administration	**$0.00**
Construction Administration	**$0.00**
TOTAL:	**$0.00**
DSA Fees:	**$0.00**

CHANGE ORDER

PROJECT:

OWNER:

CONTRACTOR:

CHANGE ORDER NO.:

DATE OF ISSUANCE:

CONTRACT DATE:

NOTICE TO PROCEED:

Architect Project No.:
DSA Appl. No.:
DSA File No.:
OPSC Appl. No.:
OSHPD No.:

The Contract is changed as follows:

Description:

See Attached pages for Change Order Items

It is mutually agreed that the affixed signature to this Change Order is evidence that all compensation with respects to the changes defined herein have been satisfied with the execution of this document. Furthermore, no additional compensation either monetarily or via time extension to this contract will be sought in respect to this Change Order.

The Original Contract Sum and Contract Completion Date:		
Net change (Contract Sum and Contract Time) by previous Change Orders:		
Contract Sum and Contract Completion Date prior to this Change Order:		
Contract Sum and Contract Time (increased or decreased) by this Change Order:		
New Contract Sum and Contract Completion Date including this Change Order:		

ARCHITECT	OWNER	CONTRACTOR
Darden Architects, Inc.		
6790 North West Avenue		
Fresno, California 93711		
By:	By:	By:
Date:	Date:	Date:

☐ OWNER ☐ CONTRACTOR ☐ ARCHITECT ☐ CONSULTANT ☐ INSPECTOR ☐ OTHER

FRAGNET SUBMITTAL FORM

Date: _____ Sheet _____ of _____

From: _____ Fragnet No.: _____

To: Darden Architects, Inc.

Description of Delay: By reference to attached schedule fragnet, the following delay occurred:

_____

_____

_____

Continued on Sheets _____ of _____

Time Extension Requested: _____ wds, _____ cds.

Time Requested for Activity: Time Requested for Project:

Related Documents: The following construction documents provide evidence of the delay event:

RFI Nos.: _____ SI Nos.: _____

CCD Nos: _____ RFP Nos.: _____

Daily Reports Dated: _____ and attached.

Project Correspondence Dated: _____ and attached.

Other Documentation: _____

Schedule-Related Information: By reference to the attached fragnet, provide the following:

Predecessor Activity to Fragnet:

Successor Activity to Fragnet:

Affected CPM Schedule Activities (list IDs and descriptions):

_____

_____

New CPM Schedule Activities (list IDs and descriptions):

_____

_____

END OF FORM

APPLICATION FOR PAYMENT

To:
DARDEN ARCHITECTS, INC.
6790 N. West Avenue
Fresno, CA 93711

Project: _____

Bid Package No: _____

Pay Application No: _____

Application Date: _____

Period Ending: _____

Distribution to: _____
Owner: _____
Architect: _____
Contractor: _____
Const Mgr.: _____
Inspector: _____

FROM: _____
Prime Contractor

Address: _____ Phone: _____

CONTRACTOR'S APPLICATION FOR PAYMENT:

CHANGE ORDER SUMMARY		
APPROVED CHANGE ORDERS:		
Change Order No.	Approved Date.	Amount:
		$
		$
		$
		$
		$
		$
		$
		$
TOTALS		
Net change by Change Order		$

The undersigned Contractor certifies that in the best of his knowledge, information, and belief the Work covered by this Application for Payment has been completed in accordance with the Contract Documents, that all amounts have been paid by the contractor for work for which previous Certificates for Payment were issuesd and payment received from the Owner and that current payment show herein is now due.

Contractor:

_____ **DATE:** _____

The present status of the account for this Contract is as follows:

ORIGINAL CONTRACT SUM:..... $ _____

Net Change by Change Orders:..... $ _____

CONTRACT SUM TO DATE:..... $ _____

TOTAL COMPLETE & STORED TO DATE:..... $ _____

RETAINAGE:_____%:..... $ _____

TOTAL EARNED LESS RETAINAGE:..... $ _____

LESS STOP NOTICE(S):..... $ _____

LESS PREVIOUS PAYMENT:..... $ _____

CURRENT PAYMENT DUE:..... $ _____

This Certificate is not negotiable. This AMOUNT CERTIFIED is payable only to the Contractor named herein, issuance, payment and acceptance of payment, are without prejudice to any rights of the Owner or Contractor under this contract.

CONTRACTOR:

_____ **DATE:** _____

INSPECTOR:

_____ **DATE:** _____

CONSTRUCTION MANAGER:

_____ **DATE:** _____

ARCHITECT:

_____ **DATE:** _____

CONTRACTOR'S TESTING / INSPECTION REQUEST FORM

PROJECT: _____

DATE RECEIVED: _____ (by Inspector)
TIME RECEIVED: _____ (by Inspector)

BUILDING: _____
SITE/OFFSITE: _____
CONSTRUCTION PHASE (1, 2, 3, etc.): _____
SPECIFICATION SECTION (No.): _____
PLAN SHEET AND DETAIL: _____
SCOPE OF WORK: _____
(concrete, electrical, etc.)

INSPECTION REQUESTED BY: _____
(contractor name)

LOCATION (bldg., room, floor, wall, ceiling, etc.) _____

_____

_____

TYPE OF INSPECTION (concrete, framing, welding, masonry, electrical, etc.) _____

_____

_____

INSPECTION REQUESTED ON: _____ at _____ am/pm
(date) (time)

Note 1: A Minimum Notice of 48 hours is Required to be Received by the Inspection Officer Prior to the Time the Testing / Inspection is Requested to Begin.

_____
PRINT NAME AND TITLE OF PERSON REQUESTING INSPECTION

_____
SIGNATURE OF PERSON REQUESTING INSPECTION

Note 2: Contractor Must Accompany Inspector on Inspection, if Requested.

PASSED: _____ FAILED: _____

Note 3: See Attached Sheet for Explanation if Inspection Failed. Re-inspection Required.

INSPECTOR SIGNATURE: _____ Date: _____

CONTRACTOR'S "DEVIATION NOTICE" INSPECTION REQUEST FORM

PROJECT: _____

DATE RECEIVED: _____ (by Inspector)
TIME RECEIVED: _____ (by Inspector)

DEVIATION NOTICE(S) (No.): _____

BUILDING: _____
SITE/OFFSITE: _____
CONSTRUCTION PHASE (1, 2, 3, etc.): _____
SPECIFICATION SECTION (No.): _____
SCOPE OF WORK: _____
(concrete, electrical, etc.)

INSPECTION REQUESTED BY: _____
(contractor company name)

LOCATION(S) OF WORK FOR INSPECTION (be specific- bldg.(s), room(s), etc.)

_____

_____

INSPECTION REQUESTED ON: _____ at _____ am/pm
(date) (time)

Note 1: A Minimum Notice of 48 hours is Required to be Received by the Inspection Officer Prior to the Time the "Deviation Notice" Inspection is Requested to Begin.

_____
PRINT NAME OF PERSON REQUESTING DEVIATION NOTICE INSPECTION

_____
SIGNATURE OF PERSON REQUESTING DEVIATION NOTICE INSPECTION

Note 2: Contractor Must Accompany Project Inspector on "Deviation Notice" Inspection, if Requested.

Note 3: See Attached "Deviation Notice" for Inspector's Comments and/or Date Completed.

PASSED: _____ FAILED: _____

PROJECT INSPECTOR SIGNATURE: _____
DATE: _____

CONTRACTOR'S FINAL INSPECTION REQUEST FORM

PROJECT: _____

DATE RECEIVED: _____ (by Inspector)

TIME RECEIVED: _____ (by Inspector)

BUILDING: _____

SITE/OFFSITE: _____

CONSTRUCTION PHASE (1, 2, 3, etc.): _____

SPECIFICATION SECTION (No.): _____

SCOPE OF WORK: _____

(concrete, electrical, etc.)

INSPECTION REQUESTED BY: _____

(contractor company name)

INSPECTION REQUESTED ON: _____ at _____ am/pm

(date) (time)

Note 1: A Minimum Notice of 48 hours is Required to be Received by the Inspection Officer Prior to the Time the Final Inspection is Requested to Begin. Contractor to be Notified by the Construction Manager in Regards to the Actual Date and Time of the Final Inspection.

_____

PRINT NAME AND TITLE OF PERSON REQUESTING FINAL INSPECTION

_____

SIGNATURE OF PERSON REQUESTING FINAL INSPECTION

Note 2: Contractor Must Accompany Project Inspector, Architect and/or Engineer(s) on Final Inspection, if Requested.

PASSED: _____ FAILED: _____

Note 3: If the Final Inspection Fails Re-Inspection is Required. See Attached Sheet for Comment(s).

PROJECT INSPECTOR SIGNATURE: _____

DATE: _____

PROJECT ARCHITECT SIGNATURE: _____

DATE: _____

CONTRACTOR'S PUNCHLIST INSPECTION REQUEST FORM

PROJECT: _____

DATE RECEIVED: _____ (by Inspector)
TIME RECEIVED: _____ (by Inspector)

BUILDING: _____
SITE/OFFSITE: _____
CONSTRUCTION PHASE (1, 2, 3, etc.): _____
SPECIFICATION SECTION (No.): _____
SCOPE OF WORK: _____
(concrete, electrical, etc.)

INSPECTION REQUESTED BY: _____
(contractor company name)

LOCATION(S) OF WORK FOR INSPECTION: (be specific- bldg.(s), room(s), etc.)

_____

_____

DESCRIPTION OF WORK TO BE INSPECTED: (item number(s) from punchlist)

_____

_____

INSPECTION REQUESTED ON: _____ at _____ am/pm
(date) (time)

Note 1: A Minimum Notice of 48 hours is Required to be Received by the Inspection Officer Prior to the Time the Punchlist Inspection is Requested to Begin.

_____
PRINT NAME OF PERSON REQUESTING PUNCHLIST INSPECTION

_____
SIGNATURE OF PERSON REQUESTING PUNCHLIST INSPECTION

Note 2: Contractor Must Accompany Project Inspector on Punchlist Inspection, if Requested. Items Must Have Already Been Signed Off by Contractor.

Note 3: Attached Sheet for Contractor's Signoff and/or Inspector's Comments and/or Date Completed for the Specific Punchlist Items Noted Above.

Note 4: This Inspection is NOT A FINAL INSPECTION but Only an Acknowledgement That a Particular Item(s) is/are completed.

PROJECT: _____ - CONTRACTOR'S PUNCHLIST

CONTRACTOR NAME: _____ Page _____ of _____

ITEM NO.	DESCRIPTION	BUILDING & ROOM NO.	FLOOR	CEILING	WALLS				DATE OBSERVED	SIGNOFF/ COMMENTS
					N.	S.	E.	W.		

01.32.26.16.xls

SECTION 013300 – SUBMITTAL PROCEDURES

PART 1 - GENERAL

1.1 SUMMARY

A. This Section includes the following:
   1. Provide all material, labor, equipment and services necessary to completely provide all required submittals and other related items necessary to complete the Project as indicated by the Contract Documents.

B. Related Sections: The following Project Manual Sections contain requirements that relate to this section:
   1. ALL DIVISION 00 SPECIFICATION SECTIONS.
   2. ALL DIVISION 01 SPECIFICATION SECTIONS.
      a. 01 33 23 Submittals and Samples (FUSD)
   3. ALL SPECIFICATION SECTIONS IN THE FACILITY CONSTRUCTION SUBGROUP.
   4. ALL SPECIFICATION SECTIONS IN THE FACILITY SERVICES SUBGROUP.
   5. ALL SPECIFICATION SECTIONS IN THE SITE AND INFRASTRUCTURE SUBGROUP.

1.2 SUBMITTALS

A. Request for Electronic Files:
   1. Submit in accordance with the following:
      a. Contractor's Usage Agreement for Electronic Files:
         1) See attachment.

B. Contractor's responsibilities:
   1. The Contractor shall check, verify, and be responsible for all field measurements.
   2. The Contractor shall submit a schedule indicating when the required shop drawings and submittals will be submitted to the Architect.
      a. Submit schedule within the amount of days as indicated in Specification Section - CONSTRUCTION SCHEDULES.
   3. Submit copies as scheduled below, checked and approved by the Contractor for all submittals required for the work of the various trades. Deliver submittals promptly to avoid delays in delivery of materials or execution of the work.
      a. The Contractor (or Subcontractor) shall mark-up the submittals as to project specifics. If the specifications contains a schedule prepared by the Architect (i.e. paint symbols such as DW-1, M-1, CB-1, etc., or tile symbols such as CT-1,CT-2, or IWA, IWB, IWC, etc.), then the submittal will also contain those designations. Submittals without project specifics will be returned to the Contractor as not being properly prepared.
      b. The Contractor shall stamp the Submittals utilizing any language requested by the Owner in the General Conditions and the following minimum language:

"This submittal has been reviewed by (Name of Contractor) and approved with respect to the means,

methods, techniques, sequences, and procedures of construction, and safety precautions and programs incidental thereto. The Contractor has reviewed and approved not only the field dimensions, but the construction criteria, and has also made written notation regarding any information in the Shop Drawings that does not conform to the Contract Documents. The Contractor has reviewed this submittal and coordinated with all other Shop Drawings received to date by the Contractor and this duty of coordination has not been delegated to subcontractors, material suppliers, the Architect, or the design consultants on this project. The Contractor shall also have indicated that it has not relied upon the dimensions shown on the drawings, specifications and schedules, and that the Contractor has double-checked all dimensions for accuracy and fit. (Name of Contractor) also warrants that this submittal complies with the Contract Documents and comprises no variation thereto."

By: _____ Contractor's Signature

_____Contractor's Typed Name

Date: _____

c. Substitutions on shop drawings or in product submittals will not be considered without prior approval in accordance with Specification Section - SUBSTITUTION PROCEDURES. Submittals containing unacceptable items will be rejected.

d. The Contractor shall make any corrections required by the Architect during the Architect's initial review, and re-submit the required corrected copies for final review and distribution.

C. Architect's responsibilities:

1. The Architect will make any desired corrections with reasonable promptness, and return the submittal to the Contractor.
2. The Architect's review of such drawings or schedules shall not relieve the Contractor of responsibility for deviations from the drawings or specifications, unless he has, in writing, called the Architect's attention to such deviations at the time of submission, and secured written acceptance.
   a. The Architect's review shall be for general conformance with the design concept for the project and general compliance with the information given in the Contract Documents.
   b. The Architect's review shall not be construed as an "approval", or to relieve the Contractor(s) and material suppliers of responsibility for errors or omissions in the submitted documents.
   c. Modifications or comments made on the submittals or shop drawings during this review do not relieve the Contractor from compliance with the requirements of the drawings and specifications.
   d. Acceptance of a specific item does not include acceptance of the assembly of which the item is a component.

D. The following list of items, definitions and required quantities is a minimum required for this project. Verify with FACILITY SERVICES SUBGROUP sections for additional quantities required within those divisions.

1. Product Data: Illustrations, standard schedules, performance charts, instructions, brochures, diagrams, other product information, color choices and/or manufacturer's catalog sheets shall be specially prepared for the Project (marked-up with project specifics) and shall be submitted in sequential sets for each category of work:
   a. Quantity:
      1) Unless otherwise indicated in the Contract Documents, provide Six (6) sets.

b. Material Safety Data Sheets (MSDS): MSDS are not required, but it is recognized that applicable federal and state laws require the submission of these data sheets to an Owner. MSDS shall be turned over to the Owner (without review by the Architect or it's consultants) in compliance with federal and state laws.

2. Shop Drawings: Newly prepared information, drawn to accurate scale, consisting of drawings, diagrams, schedules, and other data specifically prepared for the Project by the Contractor, a Subcontractor, manufacturer, supplier or distributor to illustrate some portion of the Project. Do not reproduce Contract Documents or copy Standard information as the basis of Shop Drawings. Standard information prepared without specific reference to the Project is not considered Shop Drawings.
   a. Quantity: Provide One (1) reproducible original (vellum, sepia or mylar) and Three (3) opaque (blue-line or black-line xerographic) prints for each sheet or detail.
      1) The contractor shall receive the marked-up reproducibles and copy the required number of sets to the subcontractor, manufacturer's and/or material suppliers.
   b. Contractor's use of Architect's Electronic CAD Files.
      1) Upon written request by Contractor, copies of the Architect's electronic CAD files maybe available for Contractor's use in connection with this Project.
         a) Contractor's written request shall be on the Architect's "Contractor's Document Usage Agreement for Requested Documents" and may include an additional Architect's Consultant's Agreements, outlining conditions for providing files.
         b) Contractor's request shall be limited to drawings directly applicable to the Shop Drawings the Contractor wishes to create for submittal.
         c) Contractor shall pay the Architect for work incurred for providing the requested files. Payment shall be submitted with the request.
      2) The Architect's electronic CAD files are limited to files that already exist and that not all files maybe available at the Architect's and Architect's Consultant's discretion.
      3) The Architect's electronic CAD files are not part of the Contract Documents and have limitations to the accuracy, incorporating modifications, CAD system formats, CAD entity attributes and layering.
      4) The Architect's electronic CAD files have restrictions on Contractor's use, transmittal and delivery of files.

3. Samples: Physical examples specially prepared for the Project (marked-up with project specifics) which illustrate materials, equipment, or workmanship and establish standards by which the Work will be judged.
   a. Quantity:
      1) Unless otherwise indicated in the Contract Documents, provide Four (4) sets.
   b. Color samples shall be submitted on 8-1/2" x 11" cards for all colors scheduling paint types specified utilizing the paint symbols designated by the Architect in the drawings and specifications.
   c. Manufactured devices or equipment items:
      1) Quantity: One (1) sample, returned to supplier and which, when approved, may be incorporated into the Project.

4. Quality Assurance/Control submittals: Consists of design data, test reports, certificates, manufacturers instructions, and /or manufacturer's field reports.
   a. Quantity:

1) Unless otherwise indicated in the Contract Documents, provide Six (6) sets.

5. Closeout submittals: Maintenance data, operating manuals, project documents, engineering calculations, and/or warranties shall be submitted when required in the various specification sections:
   a. Quantity:
      1) Unless otherwise indicated in the Contract Documents, provide Two (2) sets.
6. Field Samples: Sample panels of in place construction, or selected area of completed substrates or work showing the anticipated compliance with specified characteristics in order to establish a standard of quality.
   a. Quantity:
      1) See specific specification section requirements.
7. Mockups: Full-sized erected assemblies, used for coordination purposes or for testing in a laboratory, or required for approval in a finish form before the actual Project construction begins.
   a. Quantity:
      1) See specific specification section requirements.

E. Substitution, Dispute or Claim Submittals:
   1. Any substitution, dispute or claim submittals relating to this contract, or any Contract breach, which are not disposed of by agreement shall be promptly submitted in accordance with the GENERAL CONDITIONS, as a claim to and decided by the Architect who shall issue a written decision on the dispute.
   2. Adequate supporting data shall include, but is not limited; a statement of the reasons for the asserted entitlement, the certified payroll, invoice for material and equipment rental, and an itemized breakdown of any adjustment sought.
   3. If no "SUBMISSION UNDER PENALTY OF PERJURY" clause is provided within the GENERAL CONDITIONS, then the Contractor shall certify, at the time of submission of a substitution, dispute or claim, as follows:

(The rest of this page is left intentionally blank)

SUBMISSION UNDER PENALTY OF PERJURY

I _____, being the _____(Must be an officer), declare under penalty of perjury under the laws of the State of California, and do personally certify and attest that: I have thoroughly reviewed the attached substitution, dispute or claim for additional compensation and/or extension of time, and know its contents, and said claim is made in good faith; the supporting data is truthful and accurate; that the amount required accurately reflects the contract adjustment for which the Contractor believes the Owner is liable; and further, that I am familiar with California Government Code Section 12650, et seq, pertaining to false claims, and further know and understand that submission of certification of a false claim may lead to fines, imprisonment and/or other severe legal consequences.

By: _____ Contractor's Signature

_____ Contractor's Typed Name

Date: _____

Submission of a substitution, dispute or claim, properly certified, with all required supporting documentation, and written rejection or denial or all or part of the claim by Owner, is a condition precedent to any action, proceeding, litigation, suit or demand for arbitration by Contractor.

(This page is left intentionally blank)

PART 2 - PRODUCTS

NOT APPLICABLE

PART 3 - EXECUTION

3.1 SCHEDULES

A. Usage Agreement For Electronic Documents:
   1. Contractor's Usage Agreement for Electronic Files:
      a. See attachment.

B. The following schedule was prepared to assist the Contractor in knowing the required submittals for this project, but may not be complete. Specific submittal information as to what is required is contained within the individual specification sections and those individual sections shall govern in the event of a question.

C. SUBMITTAL SCHEDULE
   1. 01 25 00 - SUBSTITUTION PROCEDURES
      a. SUBSTITUTION REQUEST FORMS
   2. 01 29 73 - SCHEDULE OF VALUES
      a. SCHEDULE OF VALUES
   3. 01 32 16 - CONSTRUCTION SCHEDULES
      a. CONSTRUCTION SCHEDULE, SHOP DRAWING SUBMITTAL SCHEDULE, CRITICAL PATH SCHEDULES, FRAGNETS.
   4. 01 32 26 - FORMS AND REPORTS
      a. AS REQUIRED BY THIS SPECIFICATION SECTION AND OTHER SPECIFICATION SECTIONS.
   5. 01 33 00 - SUBMITTAL PROCEDURES
      a. SHOP DRAWING AND SUBMITTAL SCHEDULE, COLOR SAMPLES OF ALL FINISH MATERIALS FOR COLOR BOARD SELECTION.
   6. 01 45 29 - TESTING LABORATORY SERVICES
      a. TESTING SCHEDULE, TEST REPORTS
   7. 01 77 20 - PROJECT CLOSEOUT
      a. ANOTATED CONTRACTOR’S AND ARCHITECT’S PUNCH LIST. ALL OPERATIONAL DATA, ALL MAINTENANCE MANUALS, ALL EXTRA MATERIALS.
   8. 01 78 36 - WARRANTIES
      a. ALL GUARANTEES AND WARRANTIES
   9. 01 78 39 - PROJECT DOCUMENTS
      a. PROJECT "AS-BUILT" DOCUMENTS, PROJECT "RECORD" DOCUMENTS AND PROJECT "CERTIFICATION" DOCUMENTS.
   10. 03 11 01 - CONCRETE FORMWORK
      a. PRODUCT DATA, SAMPLES, QUALITY ASSURANCE/CONTROL SUBMITTALS, CLOSEOUT SUBMITTALS.
   11. 03 15 14 - DRILLED ANCHORS

a. PRODUCT DATA, ICC EVALUATION SERVICE REPORTS, DSA APPROVAL LETTERS.

12. 03 20 00 - REINFORCEMENT
    a. SHOP DRAWINGS, QUALITY ASSURANCE/CONTROL SUBMITTALS, CLOSEOUT SUBMITTALS.
13. 03 30 00 - CAST-IN-PLACE CONCRETE
    a. PRODUCT DATA, QUALITY ASSURANCE/CONTROL SUBMITTALS, CLOSEOUT SUBMITTALS.
14. 03 37 13 - SHOTCRETE
    a. PRODUCT DATA, QUALITY ASSURANCE/CONTROL SUBMITTALS, CLOSEOUT SUBMITTALS.
15. 04 23 00 - GLASS MASONRY UNITS
    a. SAMPLES, COLOR SAMPLES, PRODUCT DATA CERTIFICATION.
16. 05 30 00 - METAL DECK
    a. PRODUCT DATA, SHOP DRAWINGS, QUALITY ASSURANCE/CONTROL SUBMITTALS, CLOSEOUT SUBMITTALS.
17. 05 52 00 - RAILING SYSTEMS
    a. MATERIALS LIST, SHOP DRAWINGS, AND WARRANTIES.
18. 06 18 00 - GLUE-LAMINATED CONSTRUCTION
    a. SHOP DRAWINGS, VERIFIED REPORTS, AND WARRANTIES.
19. 06 22 00 - MILLWORK
    a. PRODUCT DATA, SHOP DRAWINGS, AND WARRANTIES.
20. 06 61 16 - SOLID SURFACING
    a. SHOP DRAWINGS, MANUFACTURER'S SPECIFICATIONS, COLOR SAMPLES, MOCK-UP, WI CERTIFICATION.
21. 07 21 00 - INSULATION
    a. PRODUCT DATA, INSTALLATION INSTRUCTIONS, CLOSEOUT SUBMITTALS.
22. 07 31 13 - SHINGLES
    a. PRODUCT DATA, SHOP DRAWINGS, SAMPLES, CLOSOUT SUBMITTALS.
23. 07 40 00 - METAL PANELS
    a. PRODUCT DATA, SHOP DRAWINGS, SAMPLES, CLOSOUT SUBMITTALS.
24. 07 51 13 - BUILT-UP ROOFING (Cold)
    a. PRODUCT DATA, SHOP DRAWINGS AND WARRANTIES.
25. 07 53 16 - ELASTOMERIC MEMBRANE ROOFING ("Dur-O-Last" CPA)
    a. PRODUCT DATA, SHOP DRAWINGS AND WARRANTIES.
26. 07 72 00 - ROOF ACCESSORIES
    a. PRODUCT DATA, SHOP DRAWINGS, SAMPLES AND WARRANTIES.
27. 07 81 16 - FIREPROOFING
    a. MATERIALS LIST, COLORS, MANUFACTURER'S DATA, TEST DATA AND SAMPLES.
28. 07 95 00 - EXPANSION JOINTS
    a. MATERIALS LIST, SHOP DRAWINGS, AND WARRANTIES.
29. 08 14 16 - WOOD DOORS
    a. PRODUCT DATA AND SHOP DRAWINGS.
30. 08 15 13 - LAMINATE-FACED WOOD DOORS
    a. PRODUCT DATA AND SHOP DRAWINGS.
31. 08 33 00 - COILING DOORS
    a. PRODUCT DATA, SHOP DRAWINGS AND WARRANTIES.
32. 08 91 00 - LOUVERS

a. PRODUCT DATA, SHOP DRAWINGS, CERTIFICATES AND COLORS.

33. 09 24 00 - CEMENT PLASTER
    a. PRODUCT DATA (INCLUDING INSTALLATION METHODS) AND MATERIALS LIST.
34. 09 26 13 - VENEER PLASTER
    a. PRODUCT DATA (INCLUDING INSTALLATION METHODS) AND MATERIALS LIST.
35. 09 30 13 - TILE
    a. PRODUCT DATA, COLORS, SAMPLES, CERTIFICATES, MAINTENANCE MATERIAL AND WARRANTIES.
36. 09 51 00 - ACOUSTICAL CEILINGS
    a. ACOUSTICAL TILE SAMPLES, SUSPENSION SYSTEM SAMPLES AND DSA APPROVED CEILING BRACING DRAWINGS.
37. 09 64 29 - HARDWOOD FLOOR
    a. PRODUCT DATA, SHOP DRAWINGS, QUALITY ASSURANCE/CONTROL SUBMITTALS, CLOSEOUT SUBMITTALS AND WARRANTIES.
38. 09 65 16 - RESILIENT SHEET
    a. PRODUCT DATA, SHOP DRAWINGS, QUALITY ASSURANCE/CONTROL SUBMITTALS, CLOSEOUT SUBMITTALS AND WARRANTIES.
39. 09 65 19 - RESILIENT TILE
    a. PRODUCT DATA, SHOP DRAWINGS, QUALITY ASSURANCE/CONTROL SUBMITTALS, CLOSEOUT SUBMITTALS AND WARRANTIES.
40. 09 68 40 - CARPET
    a. PRODUCT DATA, SHOP DRAWINGS, QUALITY ASSURANCE/CONTROL SUBMITTALS, CLOSEOUT SUBMITTALS AND WARRANTIES.
41. 09 69 00 - ACCESS FLOORING
    a. PRODUCT DATA, SHOP DRAWINGS, QUALITY ASSURANCE/CONTROL SUBMITTALS, CLOSEOUT SUBMITTALS AND WARRANTIES.
42. 09 91 00 - PAINTING
    a. PRODUCT DATA, MATERIALS LIST, COLORS, MAINTENANCE INFORMATION AND WARRANTIES.
43. 10 05 00 - MISCELLANEOUS SPECIALTIES
    a. PRODUCT DATA, COLORS AND SAMPLES (WHERE APPLICABLE) FOR ALL ITEMS.
44. 10 11 00 - VISUAL DISPLAY BOARDS
    a. PRODUCT DATA AND SAMPLE COLORS.
45. 10 13 00 - DIRECTORIES
    a. PRODUCT DATA, SHOP DRAWINGS, QUALITY ASSURANCE/CONTROL SUBMITTALS, CLOSEOUT SUBMITTALS AND WARRANTIES.
46. 10 14 53 - ROAD AND PARKING SIGNAGE
    a. PRODUCT DATA, SHOP DRAWINGS, QUALITY ASSURANCE/CONTROL SUBMITTALS, CLOSEOUT SUBMITTALS AND WARRANTIES.
47. 10 21 00 - TOILET PARTITIONS
    a. PRODUCT DATA, SHOP DRAWINGS, CERTIFICATES AND COLORS.
48. 10 26 00 - WALL AND CORNER GUARDS
    a. PRODUCT DATA, SHOP DRAWINGS, QUALITY ASSURANCE/CONTROL SUBMITTALS, CLOSEOUT SUBMITTALS AND WARRANTIES.
49. 10 44 00 - FIRE PROTECTION SPECIALTIES
    a. PRODUCT DATA, SHOP DRAWINGS, QUALITY ASSURANCE/CONTROL SUBMITTALS, CLOSEOUT SUBMITTALS AND WARRANTIES.

50. 10 51 13 - METAL LOCKERS
    a. PRODUCT DATA, SHOP DRAWINGS, QUALITY ASSURANCE/CONTROL SUBMITTALS, CLOSEOUT SUBMITTALS AND WARRANTIES.
51. 11 16 16 - SAFES
    a. PRODUCT DATA, SHOP DRAWINGS, CERTIFICATES AND COLORS.
52. DIV. 22 - PLUMBING SECTIONS
    a. REFER TO APPROPRIATE SPECIFICATION SECTION REQUIREMENTS.
53. DIV. 23 -HEATING, VENTILATING AND AIR CONDITIONING SECTIONS
    a. REFER TO APPROPRIATE SPECIFICATION SECTION REQUIREMENTS.
54. DIV. 25- INTEGRATED AUTOMATION SECTIONS
    a. REFER TO APPROPRIATE SPECIFICATION SECTION REQUIREMENTS.
55. DIV. 26- ELECTRICAL SECTIONS
    a. REFER TO APPROPRIATE SPECIFICATION SECTION REQUIREMENTS.
56. DIV. 27 -COMMUNICATIONS SECTIONS
    a. REFER TO APPROPRIATE SPECIFICATION SECTION REQUIREMENTS.
57. DIV. 28- ELECTRONIC SAFETY AND SECURITY SECTIONS
    a. REFER TO APPROPRIATE SPECIFICATION SECTION REQUIREMENTS.
58. 31 20 00 - EARTHWORK
    a. PRODUCT DATA, SHOP DRAWINGS, QUALITY ASSURANCE/CONTROL SUBMITTALS, PROJECT RECORD DOCUMENTS, AND WARRANTIES, AND DRAWINGS SHOWING KNOWLEDGE OF THE EXTENT OF ENGINEERED PADS.
59. 32 12 00- PAVEMENT
    a. PRODUCT DATA, SHOP DRAWINGS, QUALITY ASSURANCE/CONTROL SUBMITTALS, PROJECT RECORD DOCUMENTS, AND WARRANTIES.
60. 33 40 00- STORM DRAINAGE
    a. PRODUCT DATA, SHOP DRAWINGS, QUALITY ASSURANCE/CONTROL SUBMITTALS, PROJECT RECORD DOCUMENTS, AND WARRANTIES.

CONTRACTOR'S
USAGE AGREEMENT FOR ELECTRONIC FILES -

ELECTRONIC FILE REQUEST FORM

Project Name: _____

DA Project No.: _____

TO: DARDEN ARCHITECTS, INC.

6790 N. West Avenue

Fresno CA 93711

A. I _____as a duly authorized agent of

_____, have a contract with the Owner to perform work on the above project in the following capacity:

___ Lease-Lease Back Agent

___ Construction Manager

___ General Contractor

B. We hereby submit for your consideration a request for Electronic Files on the behalf of

_____, and certify that they have a contract or subcontract to perform work on the above named project in the following capacity:

___ General Contractor
___ Sub-Contractor
___ Others under contract to a sub-contractor

C. I _____, certify the required attachments are included as follows:

___ Completed "Usage Agreement for Electronic Files Agreement along with appropriate related supplemental Agreements.
___ Files requested are specific and are not deemed vague or excessive and with individual sheet numbers identified, and the total number of sheets are correct.
___ The enclosed Payment is accurate ($120 per sheet) and is made payable to Darden Architects, Inc..

_____ _____
Print Name, Title

_____ _____
Signature Date

CONTRACTOR'S USAGE AGREEMENT
FOR ELECTRONIC FILES

PROJECT NAME: _____

DA PROJECT NO.: _____

PROJECT ARCHITECT: _____

I _____, as a duly authorized agent of_____ - (Contractor) have a contract or subcontract to perform work on the above named project. The Contractor acknowledges having received at least one (1) complete set of Contract Documents for the project and has posted all Addenda and all other contract documents issued to date.

Contractor Document Usage Agreement

The Contractor is requesting the electronic CAD files of work prepared by the Architect and/or Architect's Consultants (Design Team) on the subject project, so that the information therein may be utilized in the Contractor's work on the same project. The Contractor understands that these files are being provided as a courtesy and they are strictly intended for the Contractor's sole convenience and they are not recognized Contract Documents. This request is subject to the following conditions, which the Contractor hereby agrees to abide by:

1. It is understood and agreed to that any files and/or documents provided are instruments of professional service by the Design Team and are intended for one-time use solely in the construction of this project. They are and shall remain the property of the Architect or the Architect's Consultants, who is deemed to be the author of the drawings and data, and who shall retain all common law, statutory law, and all other rights, including copyrights.

2. The Contractor shall indemnify and hold harmless, the Design Team, its officers, directors, employees or subcontractors, to the fullest extent permitted by law, against all claims, liabilities, losses, damages, and costs, including but not limited to attorney's fees and defense costs arising out of or resulting from contractor's use of these electronic files, or in any way connected with the modification, misinterpretation, misuse, or reuse by the Contractor or by others.

3. The Contractor agrees that by using these electronic files, the Contractor is in no way relieved of the duty to fully comply with the Contract Documents, including and without limitation, the need to check, confirm and coordinate all dimensions and other details, take field measurements, verify field conditions and coordinate with all other contractors for the project.

4. It is agreed to that these electronic files are not Contract Documents. Differences may exist between electronic files and corresponding hard-copy Contract documents. The Design Team makes no representation regarding the accuracy or completeness of the electronic files provided to the contractor. In the event that a conflict arises, the signed and sealed hard-copy Contract Documents shall govern. Contractor is responsible for determining if any conflict exists.

5. The Contractor understands that the Design Team makes no representation as to the compatibility of these files with Contractor's computer hardware or software. The Contractor understands that the accuracy of the information is an artifact of the techniques used to generate it and is in no way intended to imply actual accuracy. It is also understood that the automated conversion of information and data from the system and format used by the Design Team to an alternate system or format cannot be

accomplished without the possibility of introduction of inexactitudes, anomalies and errors.

6. Because information presented on the electronic files can be modified, unintentionally or otherwise, the Design Team reserves the right to edit the drawings to remove information deemed not necessary and/or remove all indications of ownership and/or involvement from each electronic display.

7. The Design Team will only furnish those drawings directly applicable to the shop drawings the contractor wishes to create. The Contractor understands that not all electronic files may be available at the Design Team's discretion.

8. The Contractor understands that the Architect's Consultants may have Additional Conditions for release of their electronic files or documents, and the Contractor hereby agree to abide by the Consultants conditions in addition to the stated conditions in this agreement. Additional Conditions (if any) are attached to this agreement.

9. The Contractor understands that the Architect and the Architect's Consultants will incur certain costs in providing the requested electronic files. The Contractor agrees to pay the Design Team a service fee of $120.00 per sheet, per delivery, prior to any delivery of the electronic files to compensate the Design Team for the labor to prepare and transmit the files and for the additional risk that this transfer will occasion.

10. Under no circumstances shall delivery of the electronic files for use by the Contractor be deemed a sale by the Owner, the Design Team, or any member of the Design Team. The Design Team makes no warranties, either expressed or implied, of merchantability or fitness for any particular purpose. In no event shall the Design Team be liable for any loss of profit or any consequential damages as a result of Contractor's use or reuse of the electronic files.

Darden Architects, Inc.

Attachments:
___ Civil ___ Structural ___ Mechanical ___ Electrical ___ Others

Description of the requested documents and/or CAD files:
_____
_____

_____ _____
Printed Name Title

_____ _____
Signed Dated

FOR USE BY ARCHITECT ONLY
___ Check Not Attached – Not Accepted
___ Accepted
___ Accepted as Noted
___ Not Accepted
By_____
Date_____
Remarks_____
_____

END OF SECTION

SECTION 013516 – ALTERATION PROJECT PROCEDURES

PART 1 - GENERAL

1.1 SUMMARY

A. This Section includes the following:
   1. Provide all material, labor, equipment and services necessary to completely install all materials, accessories and other related items necessary to complete the Project as indicated by the Contract Documents.

B. Coordinate the work of trades and schedule elements of alterations and renovation work by procedures and methods to expedite completion of the work.

C. In addition to demolition specifically shown, cut, move or remove items as necessary to provide access or to allow alterations and new work to proceed. Include such items as:
   1. Repair or removal of hazardous or unsanitary conditions.
   2. Removal of abandoned items and items serving no useful purpose, such as abandoned piping, conduit and wiring.
   3. Removal of unsuitable or extraneous materials not marked for salvage, such as abandoned furnishings and equipment, and debris such as rotted wood, rusted metals and deteriorated concrete.
   4. Cleaning of surfaces, and removal of surface finishes as needed to install new work and finishes.

D. Patch, repair and refinish existing items to remain, to the specified condition for each material, with a smooth and clean transition to adjacent new items of construction.

E. Related Sections: The following Project Manual Sections contain requirements that relate to this section:
   1. ALL DIVISION 00 SPECIFICATION SECTIONS.
   2. ALL DIVISION 01 SPECIFICATION SECTIONS.
   3. 31 12 00 SELECTIVE DEMOLITION
   4. 03 30 00 CAST-IN-PLACE CONCRETE
   5. 04 22 00 CONCRETE MASONRY UNITS
   6. 08 11 00 METAL DOORS AND FRAMES
   7. 09 24 00 CEMENT PLASTER
   8. 09 29 00 GYPSUM BOARD
   9. 09 30 00 TILE
   10. 09 50 00 ACOUSTICAL CEILINGS
   11. 09 91 00 PAINTING
   12. ALL SPECIFICATION SECTIONS IN THE FACILITY SERVICES SUBGROUP.
   13. ALL SPECIFICATION SECTIONS IN THE SITE AND INFRASTRUCTURE SUBGROUP.

PART 2 - PRODUCTS

2.1 MATERIALS (Products for Patching, Extending and Matching):

A. Provide same products or types of construction as that in existing structure as needed to patch, extend or match existing.

B. The Contract Documents will not typically define products or standards of workmanship present in existing construction; determine products by inspection and necessary testing, and determine quality of workmanship by using existing as a sample for comparison.

C. The presence of a product, finish, or type of construction requires that patching, extending or matching shall be performed as necessary to make work complete and consistent with identical standards of quality.

PART 3 - EXECUTION

3.1 REPAIR / RESTORATION

A. Patch and extend existing construction using skilled workers capable of matching existing quality of workmanship. Quality of patched or extended work shall be not less than that specified for new work.

B. Damaged Surfaces:
   1. Patch and replace portions of existing finished surfaces that are found to be damaged, lifted, discolored, or show other imperfections, with matching material.
      a. Provide adequate support of substrate prior to patching the finish.
      b. Refinish patched portions of painted or coated surfaces in a manner to produce uniform color and texture over the entire surface.
      c. When existing surface finish cannot be matched, refinish entire surface to nearest intersections.

C. Transition from existing to new work:
   1. When new work abuts or finishes flush with existing work, make a smooth and clean transition. Patched work shall match existing adjacent work in texture and appearance so that the patch of transition is invisible at a distance of five feet.
   2. When finished surfaces are cut in such a way that a smooth and clean transition with the new work is not possible, notify the Architect. Terminate existing surface in a neat manner along a straight line at a natural line of division, and provide trim appropriate to finished surface, or as otherwise directed by the Architect

3.2 ADJUSTING

A. Test and adjust controls and safeties. Replace damaged or malfunctioning controls and equipment.

B. Where partitions are removed, patch floors, walls, and ceilings with finish materials to match existing.
   1. Where removal of partitions results in adjacent spaces becoming one, re-work floors and ceilings to provide smooth and clean planes without breaks, steps, or bulkheads.
   2. Where extreme change of plane of one inch or more occurs, request instruction from the Architect as to method of making transition.

C. Trim and refinish existing doors as necessary to clear new floor finishes.

3.3 CLEANING

A. Clean in accordance with Specification Section - PROJECT CLOSEOUT.
   1. Leave area level and free of any ruts or debris. Appearance of earth surface shall be equal to or better than adjacent undisturbed surfaces.
   2. Clean any soiled surfaces immediately.
   3. Finish shall be clean and ready for the application of any additional finishes.

B. Perform periodic and final cleaning as specified in Specification Section - PROJECT CLOSEOUT.
   1. Clean Owner-occupied areas daily.
   2. Clean spillage, over spray, and heavy collection of dust in Owner-occupied areas immediately.

C. At completion of work of each trade, clean area and make surfaces ready for work of successive trades.

D. At completion of alteration work in each area, provide final cleaning and return space to a condition suitable for use by the Owner.

E. Contractor shall remove all materials and items as indicated on drawings or otherwise required. Remove all trash or debris as it accumulates and legally dispose of it off site at no additional cost to the Owner.

3.4 PROTECTION

A. Protection from weather:
   1. Protect newly installed work from freezing for 24 hours after erection, installation or application.

B. Protection from traffic:
   1. Provide final protection and maintain conditions, in a manner acceptable to manufacturer and installer, which ensures the work of this section being without damage or deterioration until the time of Substantial Completion.
   2. Immediately after cleaning, neatly apply four (4) mil thick, minimum, polyethylene film over finished surfaces at traffic areas. Fasten film firmly to surfaces without visually marring those surfaces.

C. Assign the work of moving, removal, cutting and patching, to trades qualified to perform the work in a manner to minimize the possibility of damage to each type of work, and provide means of returning surfaces to appearance of new work.

D. Perform cutting and removal work with minimal disruption and manner to avoid damage to adjacent work.

E. Cut finish surfaces such as masonry, tile, plaster or metals, by methods which terminate surfaces in a straight line at a natural point of division.

F. Perform cutting and patching as specified in Specification Section - CUTTING AND PATCHING.

G. Protect existing finishes, equipment, and adjacent construction from damage.
   1. Protect existing and new work from weather and extremes of temperature.
   2. Maintain existing interior work above 60 degrees F.
   3. Provide weather protection, waterproofing, heat and humidity control as needed to prevent damage to remaining work and to new work.

3.5 SCHEDULES

A. Schedule work in the sequences specified in Specification Section - SUMMARY OF WORK, if applicable.

END OF SECTION

SECTION 014100 – REGULATORY REQUIREMENTS

PART 1 - GENERAL

1.1 SUMMARY

A. This Section includes the following:
   1. Provide all material, labor, equipment and services necessary to completely install all materials, accessories and other related items necessary to complete the Project as indicated by the Contract Documents.
   2. Section 4-317 (c), Part 1, Title 24, CCR, requires the following:
      a. "The intent of these drawings and specifications is that the work of the alteration, rehabilitation or reconstruction is to be in accordance with Title 24, California Code of Regulations. Should any existing conditions such as deterioration of non-complying construction be discovered which is not covered by the contract documents wherein the finished work will not comply with Title 24, California Code of Regulations, a change order, or a separate set of plans and specifications, detailing and specifying the required work shall be submitted to and approved by the Division of the State Architect before proceeding with the work."

B. Related Sections: The following Project Manual Sections contain requirements that relate to this section:
   1. ALL DIVISION 00 SPECIFICATION SECTIONS.
   2. ALL DIVISION 01 SPECIFICATION SECTIONS.
   3. ALL SPECIFICATION SECTIONS IN THE FACILITY CONSTRUCTION SUBGROUP.
   4. ALL SPECIFICATION SECTIONS IN THE FACILITY SERVICES SUBGROUP.
   5. ALL SPECIFICATION SECTIONS IN THE SITE AND INFRASTRUCTURE SUBGROUP.

1.2 REFERENCES

A. References to standards, codes, specifications, recommendations and regulations, refer to the latest edition or printing in effect at the date of issue shown in the Documents unless another date is implied by the suffix number of the Standards.

B. Applicable portions of the Standards listed that are not in conflict with the Contract Documents shall be construed as specification for this work.

C. General Standards:
   1. AFPA American Forest and Paper Association
   2. ANSI American National Standards Institute
   3. ASTM American Society for Testing and Materials
   4. CAL/OSHA California Occupational Safety and Health Administration
      a. State of California Construction Safety Orders
   5. CS Commercial Standards of the US Department of Commerce
   6. EPA Environmental Protection Agency
   7. FMG Factory Mutual Group

8. NIBS National Institute of Building Sciences
9. NIST National Institute of Standards and Technology
10. NFPA National Fire Protection Association
11. OSHA Occupational Safety and Health Administration
    a. Federal Construction Safety Orders
12. PS Product Standards of the US Department of Commerce
13. SS-CDOT "Standard Specification":
    a. State of California Department of Transportation (CalTrans)
14. UL Underwriters Laboratory Incorporated
15. WH Warnock Hersey

1.3 SUBMITTALS

A. Submit in accordance with Specification Section - SUBMITTAL PROCEDURES:

B. Quality Assurance/Control Submittals:
1. Certificates:
    a. Submit three (3) copies of certificates written on the Contractor's Letterhead indicating that the required codes shall be present at the Job Site.

1.4 QUALITY ASSURANCE

A. Regulatory Requirements:
1. All codes, laws, ordinances, rules, regulations, orders and other legal requirements of City, County, State, Federal and other public authorities which bear on performances of Work shall be applicable to Project. Latest editions shall be applicable unless specified otherwise.
2. Relationship between Applicable Codes and Contract Documents. The Contract Documents have been developed with the intent to conform to the applicable codes. Nothing within the Contract Documents shall be construed to permit Work not conforming to the applicable codes.

B. Major Governing Codes And Regulations:
1. General: All work shall comply with the requirements of the following codes and regulations. Special reference in other Sections of the Specifications to a specific code will be by use of the abbreviation given in front of the Code.
    a. Freestanding equipment (if applicable) shall be provided and installed in accordance with the seismic requirements where the Project is located.
2. NOTE: * -Indicates that a copy of these codes shall be at the job site at all times.
3. AUTHORITY HAVING JURISDICTION:
    a. AHJ Authority Having Jurisdiction
4. FEDERAL LAW:
    a. ADA Americans with Disabilities Act
5. CALIFORNIA CODE OF REGULATIONS (Previously known as the California Administrative Codes)
    a. CCR-T5: California Code of Regulations, Title 5-Education.
    b. CCR-T8: California Code of Regulations, Title 8-Industrial Safety
        1) Contains the California Elevator Safety Code.
    c. CCR-T19: California Code of Regulations, Title 19-Public Safety.

d. CCR-T21: California Code of Regulations, Title 21-Public Works.
e. *CCR-T24: California Code of Regulations, Title 24, Part 1-Administrative Regulations DSA.

6. CALIFORNIA BUILDING, ELECTRICAL, MECHANICAL, PLUMBING, ENERGY, FIRE, and REFERENCED CODES
   a. *CBC: California Building Code 2016 California Code of Regulations, Title 24-Part 2, Volumes 1 and 2, CCR-T24, based on the 2015 edition of the IBC (International Building Code), with the latest California State Amendments.
   b. *CEC: California Electrical Code 2016, California Code of Regulations, Title 24-Part 3, CCR-T24, based on the 2014 edition of the NEC (National Electrical Code), with the latest California State Amendments.
   c. *CMC: California Mechanical Code 2016, California Code of Regulations, Title 24, Part 4, CCR-T24, based on the 2015 edition of the UMC (Uniform Mechanical Code), with the latest California State Amendments.
   d. *CPC: California Plumbing Code 2016, California Code of Regulations, Title 24, Part 5, CCR-T24, based on the 2015 edition of the UPC (Uniform Plumbing Code) by IAPMO, with the latest California State Amendments.
   e. *CEnC: California Energy Code 2016, California Code of Regulations, Title 24, Part 6, CCR-T24, and the latest California State Amendments.
   f. *CFC California Fire Code 2016, California Code of Regulations, Title 24, Part 9, CCR-T24, based on the 2015 edition of the IFC (International Fire Code), with the latest California State Amendments.
      1) In addition to all other Chapters in the CFC to be followed, attention is specifically called out to comply with Chapter 33 - "Fire Safety During Construction and Demolition".
   g. CBSC California Building Standards Commission, California Code of Regulations, Title 24, Part 10, CCR-T24.
   h. CGBSC California Green Building Standards Code 2016, California Code of Regulations, Title 24-Part 11, CCR-T24 (CALGreen).
   i. CRSC: California Referenced Standard Code 2016, Title 24, Part 12, CCR-T24, with the latest California State Amendments.
7. DIVISION OF THE STATE ARCHITECT:
   a. DSA: Regulations of the Division of the State Architect of the State of California:
      1) ACS Access Compliance Section
      2) SSS Structural Safety Section
      3) FLS Fire and Life Safety Section
      4) IR: Interpretation of Regulations.
8. OTHER STATE AGENCIES:
   a. AQMCD: Air Quality Management Control District in the area where the project is located.
   b. RWQCB Regional Water Quality Control Board in the area where the project is located.

C. Governing Authority:
1. The provisions of the State of California, Statutes of 1933, Chapter 59, Safety of Construction of Public School Buildings Act, and the latest regulation based thereon, of the Division of the State Architect of the State of California, shall be the governing authority and shall take precedence over other applicable codes.
2. The following shall be stamped and signed by the A/E on Record or Delegated Design Professional per CBC, Part 1, Section 4-317 (h), and the following:

a. Addenda or Bulletins per Sec. 4-338(b): All addenda or bulletins shall be signed and approved by the Division of State Architect.
b. Construction Changes per Sec. 4-338(c): All Construction Changes related to structural items, fire safety issues, life safety issues and accessibility compliance issues shall be reviewed and approved by the appropriate Division of the State Architect.
c. Substitutions (per DSA) shall be treated like Addenda, or Construction Changes per Sec. 4-338(c), and IR A-6: All substitution requests and substitutions related to structural items, fire safety issues, life safety issues and accessibility compliance issues shall be reviewed and approved by the appropriate Division of the State Architect prior to fabrication and installation.

PART 2 - PRODUCTS

NOT APPLICABLE

PART 3 - EXECUTION

NOT APPLICABLE

END OF SECTION

SECTION 014200 – REFERENCES

PART 1 - GENERAL

1.1 SUMMARY

A. This Section includes the following:
   1. Provide all material, labor, equipment and services necessary to completely install all materials, accessories and other related items necessary to complete the Project as indicated by the Contract Documents.
      a. The abbreviations, symbols and work meanings not defined in the Contract Documents are in accordance with building industry usage and convention. Questions which arise as to "meaning," or intent shall be referred to the Architect prior to bidding for interpretation.
      b. Refer to drawings for additional abbreviations and symbols.
      c. Refer to GENERAL and SPECIAL or SUPPLEMENTAL CONDITIONS and specific specification Sections for additional definitions.

B. Related Sections: The following Project Manual Sections contain requirements that relate to this section:
   1. ALL DIVISION 00 SPECIFICATION SECTIONS.
   2. ALL DIVISION 01 SPECIFICATION SECTIONS.
   3. ALL SPECIFICATION SECTIONS IN THE FACILITY CONSTRUCTION SUBGROUP.
   4. ALL SPECIFICATION SECTIONS IN THE FACILITY SERVICES SUBGROUP.
   5. ALL SPECIFICATION SECTIONS IN THE SITE AND INFRASTRUCTURE SUBGROUP.

1.2 DEFINITIONS

A. EXECUTE Perform what is required to install, apply, erect and otherwise incorporate products in to this Project.

B. FURNISH Supply products required, deliver to Project, unload, store and install as required in location as directed by Contractor, Owner or Architect.

C. GUARANTEE An assurance by the seller or installer that products or Work are as represented or will be as promised in compliance with Specifications. Synonymous and interchangeable with WARRANTY.

D. INSTALL Incorporate into this Project.

E. PRODUCTS The material, equipment, fixtures and other physical substances required to execute the Project.

F. PROVIDE Furnish and Install into this Project.

G. WARRANTY An assurance by the seller or installer that products or Work are as represented or will be as promised in compliance with Specifications. Synonymous and interchangable with GUARANTEE.

PART 2 - PRODUCTS

NOT APPLICABLE

PART 3 - EXECUTION

NOT APPLICABLE

END OF SECTION

SECTION 014523 – TESTING AND INSPECTION SERVICES

PART 1 - GENERAL

1.1 SUMMARY

A. This Section includes the following:
1. One Project Inspector (Owner's Inspector), including Special and/or Assistant Inspector(s) (minimum Class 1 Rating), as required, will be employed by the Owner in accordance with the requirements of CCR-Title 24, Part 1, CALIFORNIA BUILDING STANDARDS ADMINISTRATIVE CODE, and the latest amendments, and will be assigned to the Project.
   a. Duties of a Project Inspector are specifically defined in CCR-Title 24, Part 1, and the latest amendments.
   b. Special Inspections (not within the Project Inspector's abilities) shall be performed by the Testing Laboratory or other Special Inspector as approved by the Owner and DSA.
      1) All Special Inspections shall be approved by DSA in accordance with CCR-T24, Part 1, Chapter 4, Group 1, Article 5, Section 4-335.1.
2. The Project Inspector shall be employed by the Owner and approved by the Architect, Structural Engineer, and DSA.
   a. See the Title Page of this Project Manual for the name of this Project.
   b. Payment of the Project Inspector will be by the Owner.
3. Provide all access, facilities and information required by the Project Inspector for the Project.

B. Related Sections: The following Project Manual Sections contain requirements that relate to this section:
1. ALL DIVISION 00 SPECIFICATION SECTIONS.
2. ALL DIVISION 01 SPECIFICATION SECTIONS.
   a. 01 45 23.01 District's Inspector (IOR) (FUSD)
   b. 01 45 23.02 Tests and Inspections (FUSD)
   c. 01 45 23.33 Code Required Special Inspections (FUSD)
   d. 01 45 23.45 Inspection by District Personnel (FUSD)
3. ALL SPECIFICATION SECTIONS IN THE FACILITY CONSTRUCTION SUBGROUP.
4. ALL SPECIFICATION SECTIONS IN THE FACILITY SERVICES SUBGROUP.
5. ALL SPECIFICATION SECTIONS IN THE SITE AND INFRASTRUCTURE SUBGROUP.

1.2 DEFINITIONS

A. Responsibilities of the Project Inspector:
1. The Project Inspector will be required to provide inspection of the Work (including "Continuous Inspection") as required in CCR-T24, Part 1:
   a. Educational Work: Chapter 4, Group 1, Article 6, 4-342 (b).
2. The Project Inspector will report to the Owner, the Architect and DSA as required during the progress of the Work.

3. The Project Inspector shall review all Pay Requests prior to submittal to the Architect.

B. Responsibilities of the Contractor:
1. Written Statement of Responsibility to the Owner and the Authority Having Jurisdiction per CBC Chapter 17A:
   a. Provide a written Statement of Responsibility regarding the Contractor's understanding of the special inspection requirements and identifying individuals in their firm responsible for exercising control over the conformance to the construction documents.
2. Provide the Project Inspector free access to any and all parts of the Project at all times.
3. Provide the Project Inspector information necessary to keep him fully informed with respect to the progress, manner and character of Work.
4. Perform no Work in absence of the Project Inspector unless alternate arrangements have been made in advance and agreed to by the Owner, the Architect and DSA.
5. The Owner's "Inspection of Work" by the Project Inspector shall not relieve the Contractor from any conditions of this Contract.

1.3 SUBMITTALS

A. Submit in accordance with Specification Section - SUBMITTAL PROCEDURES:
1. Quality Assurance/Control Submittals:
   a. Written Statement of Responsibility to the Owner and the Authority Having Jurisdiction per CBC Chapter 17A.
   b. Project Inspector's Field Reports:
      1) Submit four (4) copies of reports.

1.4 QUALITY ASSURANCE

A. Regulatory Requirements:
1. In accordance with Specification Section - REGULATORY REQUIREMENTS.

PART 2 - PRODUCTS

NOT APPLICABLE

PART 3 - EXECUTION

NOT APPLICABLE

END OF SECTION

SECTION 014529 – TESTING LABORATORY SERVICES

PART 1 - GENERAL

1.1 SUMMARY

A. This Section includes the following:
   1. The Owner's Testing Laboratory shall be employed by the Owner and approved by the Architect, Structural Engineer, and DSA.
      a. Payment of the Owner's Testing Laboratory will be by the Owner.
      b. The Owner shall pay for all initial testing indicated as paid for by Owner except as specified otherwise or in the schedule at the end of this section.
         1) Cost of re-testing (due to initial failures) shall be back-charged to the Contractor, and those excess costs will be deducted from the Contract Price.
         2) Cost of testing (due to shop fabrication or in-plant testing out of state and beyond a 75 mile radius of the Project Site) shall be back-charged to the Contractor, and those excess costs will be deducted from the Contract Price.
   2. Provide all access, facilities and information required for the testing of the various portions of the Work as required by Regulatory Agencies, Planning, Agencies, Building Agencies, and other Governmental Inspectors, the Contract Documents and the Owner.

B. Related Sections: The following Project Manual Sections contain requirements that relate to this section:
   1. ALL DIVISION 00 SPECIFICATION SECTIONS.
   2. ALL DIVISION 01 SPECIFICATION SECTIONS.
   3. ALL SPECIFICATION SECTIONS IN THE FACILITY CONSTRUCTION SUBGROUP.
   4. ALL SPECIFICATION SECTIONS IN THE FACILITY SERVICES SUBGROUP.
   5. ALL SPECIFICATION SECTIONS IN THE SITE AND INFRASTRUCTURE SUBGROUP.

1.2 DEFINITIONS

A. Responsibility of the Testing Laboratory:
   1. Taking all specimens.
   2. Performing Tests.
      a. The Testing Laboratory's duties shall include all tests required by the DSA T & I Sheet prepared at the time of DSA Approvals, and any other testing as determined by authorities or the Project Inspector during the course of the work.
      b. Special Inspections (not within the Project Inspector's abilities) shall be performed by the Testing Laboratory or other Special Inspector as approved by the Owner and DSA.
         1) All Special Inspections shall be approved by DSA in accordance with CCR-T24, Part 1, Chapter 4, Group 1, Article 5, Section 4-335.
   3. Writing Test Reports
   4. Review of "Continuous Inspection" reports by the Project Inspector.

a. Portions of the Work requiring "Continuous Inspection" shall be performed by the Project Inspector (if qualified) and all reports will be reviewed by the Testing Laboratory.

5. Distribute Test Reports to the Owner, Architect, applicable Engineer, Contractor and to DSA.

B. Responsibilities of the Contractor:

1. Contractor shall provide a Testing Schedule that is in accordance with the following:
   a. Format of the Testing Schedule shall be in accordance with Specification Section – CONSTRUCTION SCHEDULES.
   b. Cooperates with the Testing Laboratory's schedule of required testing.
   c. Contractor shall coordinate Construction Schedule and Testing Schedule.
      1) Format of testing schedule in accordance with Specification Section – CONSTRUCTION SCHEDULES.
2. Cooperation with testing laboratory:
   a. Provide access to Work being tested.
   b. Provide test samples as selected by testing laboratory.
   c. Schedule Work so that there shall be no excessive inspection time.
      1) At times that an inspector is required, sufficient work shall be laid out and adequate personnel supplied so that the inspector's time shall be used to full advantage.
      2) If inspection costs become excessive because of poor shop or construction procedure, such excess costs will be paid for by the Owner, but deducted from the Contract Price.
   d. Inspections and tests required by regulatory agencies shall be the responsibility of and shall be paid for by the Owner unless specified otherwise.
   e. Inspections and testing performed exclusively for the Contractor's convenience shall be the sole responsibility of the Contractor.
   f. Test Reports:
      1) Distribute test reports and related instruction to insure all required re-testing and/or replacement of materials.
   g. Payment of Testing:
      1) All testing shall be paid for by the Owner.
3. Contractor shall be backcharged for re-testing, excessive distance from the Project Site, or extra testing required because of initial failures.

1.3 SUBMITTALS

A. Submit in accordance with Specification Section - SUBMITTAL PROCEDURES:

1. Quality Assurance/Control Submittals:
   a. Test Reports:
      1) Submit four (4) copies of testing laboratory's report.

1.4 QUALITY ASSURANCE

A. Qualifications:

1. Testing Laboratory Qualifications:
   a. In accordance with the latest Edition of ASTM E-329.

B. Regulatory Requirements and Reference Standards:
1. In accordance with Specification Section - REGULATORY REQUIREMENTS, and the following:
a. In accordance with regulatory agencies and appropriate ASTM Standards.

PART 2 - PRODUCTS

NOT APPLICABLE

PART 3 - EXECUTION

3.1 SCHEDULES

A. Testing Schedule at the end of this section should be used as a guide only and it is not considered a complete list. Refer to regulatory agency requirements and specific specification section for complete testing requirements.

B. TESTING SCHEDULE
1. 03 15 14 - DRILLED ANCHORS
a. Tension Tests.
1) Paid by Owner.
2. 03 20 00 - REINFORCEMENT
a. Rebar Material per ACI 318-14, CBC TABLE 1705A.2.1, CBC Sections 1903A.1, 1905A, and 1910A.
1) Paid by Owner
b. Continuous Inspection of Welds per ACI 318-14, CBC TABLE 1705A.2.1, CBC Sections 1903A.8, 1905A, and 1910A.
1) Paid by Owner
3. 03 30 00 - CAST-IN-PLACE CONCRETE
a. Cement Material per Chapter 26 of ACI 318-14, and CBC Sections 1903A, 1905A, and 1910A.
1) Paid by Owner
b. Aggregate Material per Chapter 26 of ACI 318-14.
1) Paid by Owner
c. Concrete Mix per Chapter 26 of ACI 318-14. CBC Sections 1903A and 1910A.
1) Paid by Owner
d. Concrete Strength Tests per Chapter 26 of ACI 318-14.
1) Paid by Owner
e. Concrete Compression Tests per Chapter 26 of ACI 318-14.
1) Paid by Owner
4. 05 12 00 - STEEL AND FABRICATIONS
a. Steel Material per CBC Section 1705A, and Table 1705A.2.1.
1) Paid by Owner
b. High Strength Bolts and installation per CBC Section 1705A, and Table 1705A.2.1.
1) Paid by Owner

c. Inspection of Shop and Field Welding per CBC Section 1705A, and Table 1705A.2.1.
   1) Paid by Owner

5. 05 30 00 - METAL DECK
   a. Steel Material per CBC Section 1705A, and Table 1705A.2.1.
      1) Paid by Owner
   b. Inspection of Shop and Field Welds per CBC Section 1705A, and Table 1705A.2.1.
      1) Paid by Owner
6. 06 17 33 - WOOD JOISTS
   a. Joist Inspections per ICC ES Evaluation Report.
7. 06 18 00 - GLUE-LAMINATED CONSTRUCTION
   a. Continuous Plant Inspection per CBC Sections 1705A.5.4, and 1705A.10.
      1) Paid by Owner
8. 09 51 00 - ACOUSTICAL CEILINGS
   a. Main and cross runners, intersection connectors and expansion devices
      1) Paid by Contractor
9. DIV. 22 - PLUMBING
   a. Non-Leaking System
      1) Paid by Contractor
   b. Bacteriological Purity
      1) Paid by Contractor
10. DIV. 23 - HEATING, VENTILATING AND AIR CONDITIONING
   a. Equipment Operation
      1) Paid by Contractor
   b. System Energy Balance
      1) Paid by Contractor
   c. Non-Leaking Hydronic System.
      1) Paid by Contractor
11. DIV. 26 - SERVICE AND DISTRIBUTION
   a. Equipment Operation
      1) Paid by Contractor
   b. Protective Systems
      1) Paid by Contractor
12. DIV. 26 - LIGHTING
   a. Equipment Operation
      1) Paid by Contractor
13. DIV. 27 - MASTER CLOCK AND PUBLIC ADDRESS SYSTEM
   a. Equipment Operation
      1) Paid by Contractor
14. DIV. 28 - FIRE SPRINKLER SYSTEM
   a. All tests required by NFPA #13.
      1) Paid by Contractor
15. DIV. 28 - WET CHEMICAL FIRE SUPPRESSION SYSTEM
   a. All tests required by NFPA #17A.
      1) Paid by Contractor

C. Division of the State Architect "Statement of Structural Tests and Special "Inspections":
   1. In addition to the TESTING SCHEDULE cited above, and elsewhere within the documents, DSA requires the Contractor to schedule and manage the following tests to be performed and reported as required for this Project.

2. Failure to schedule these tests is grounds for reduction in Monthly Payment Request authorization, and may delay distribution of the Final Payment.
3. Refer to the approved DSA 103-Listing of Structural Tests and Special Inspections Form.

END OF SECTION

INTENTIONALLY LEFT BLANK

SECTION 015000 – TEMPORARY FACILITIES AND CONTROLS

Refer to FUSD General Conditions and General Requirements, 01 51 00.01 Utilities, 01 52 19.01 Sanitary Facilities, 01 55 19.02 District Inspector (IOR) Private Office.

END OF SECTION

INTENTIONALLY LEFT BLANK

SECTION 01 56 39 - TEMPORARY TREE AND PLANT PROTECTION

PART 1 - GENERAL

1.1 SCOPE

A. Work included: Provide protection of all existing plants and planted areas indicated to remain as shown on Drawings.
B. Related Work

31 10 00 SITE CLEARING

1.2 PROJECT CONDITIONS

A. Review: Visit and walk the site with the Owner and Landscape Architect to clarify scope of work and understand project conditions.

B. Documentation: Confirm location of all plant materials designated on Drawings as "Existing to Remain". Examine existing irrigation system to remain, and report all malfunctioning equipment, to be repaired by Owner. Record all discrepancies and all conditions which threaten existing plantings. Owner shall arrange for correction of detrimental conditions.

C. Acceptance: Commencing work shall be taken as acceptance by the Contractor of responsibility for the protection of all existing site plantings.

1.3 SUBMITTALS

A. Provide six (6) copies of the following:
   1. Shop Drawings: Construction details for protective barriers and barricades are required.
   2. Schedule: Watering schedule, where interruption of irrigation systems will exceed one watering period.
   3. Record of existing conditions: Provide three (3) copies of video DVD recording of all existing plants to remain. Provide recording that shows all aspects of existing plants to remain.

1.4 DEFINITIONS

A. Protection: Provide all barricades as required to prevent damage to existing plant materials to remain, including but not limited to protection from mechanical damage, and soil compaction, pollution from all sources, and disruption of environmental support which would result in the loss of vigor of said plantings.

B. Tree Protection Zone (TPZ) - Drip Line: An imaginary line on the ground around a tree representing its outermost branch tips. All of the area within the drip line of existing trees to remain is to be protected from damage as specified herein, unless otherwise noted.

1.5 SCHEDULING

A. Construct all protective barriers prior to demolition and selective clearing. See Demolition Plan.

B. A demolition meeting will be called prior to demolition where the Landscape Architect and District will set the extent of barriers.

1.6 WARRANTY

A. General: Warrant all existing plant materials against decline resulting from damage during construction and for a period of one year.

B. Exclusions: Damage due to, Acts of God, or neglect by Owner.

1.7 REPLACEMENTS

A. General: Existing planting to remain which exhibits conditions which are determined as unacceptable due to inadequate protection during construction shall be replaced by Contractor at no expense to Owner.

B. Quality: Closely match replacements to adjacent specimens of the same species, variety, and cultivar.

C. Replacement size shall be equal to material being replaced. Contractor shall visit site prior to bidding in order to familiarize himself with possible replacement sizes.

D. Planting, Maintenance, and Warranty of Replanted Materials: See Section 329300 Plants.

E. When required replacement of plant material shall be performed within two working weeks of written notice from project inspector.

F. Liquidated damages will be assessed to the Contractor by the Owner for failure to complete the replacement of plant material within allotted time. The amount will be two hundred (200) dollars for each calendar day the work is not completed.

PART 2 - PRODUCTS

2.1 MANUFACTURERS

A. Fertilizers, Herbicides, and Pest Control as required shall be of best industry standards as approved by the Landscape Architect.

2.2 SAFETY

A. Provide all reflective signage and/or flashers as required by all codes and ordinances affecting barricaded plantings to remain.

2.3 BARRIERS

A. Barriers: Six foot (6’-0”) tall temporary chain link fence panels with posts and bases as needed to erect a protective barrier around the plant material to remain

PART 3 - EXECUTION

3.1 INSTALLATION

A. Provide barriers at the canopy drip line or Tree Protection Zone (TPZ) of all trees and plants designated to remain. Grouping of trees and plants may be enclosed by a single protective fence. Similarly protect turf, groundcover, and shrub areas from construction activities.
B. The Tree protection Zone (TPZ) shall be as defined in 1.04-B of this specification. Install temporary barricades / fencing located around the TPZ. No soil disturbance is permitted and activities restricted unless otherwise approved. The approved minimum TPZ shall be as defined in 1.04-B of this specification. Refer to images 2.15-1, 2.15-2 and 2.15-3 for fencing layout of TPZ.

IMAGE 2.15-2

- **Type II Tree Protection**
For trees situated within a **narrow planting strip**, only the planting strip shall be enclosed with the required chain link protective fencing in order to keep the sidewalk and street open for public use.(*see Image 2.15-3*)

IMAGE 2.15-1

• **Type I Tree Protection**
The fences shall enclose the entire area under the **canopy dripline or TPZ** of the tree(s) to be saved throughout the life of the project, or until final improvement work within the area is required, typically near the end of the project (*see Images 2 15-1 and 2.15-2*). Parking Areas: If the fencing must be located on paving or sidewalk that will not be demolished, the posts may be supported by an appropriate grade level concrete base.

IMAGE 2.15-3

.

3.2 OPERATIONS

A. Storage: Do not store materials or equipment under the branches of all existing trees nor in turf or ground cover areas to remain.

B. Traffic: Do not operate nor park equipment within the drip line of existing trees to remain. Keep foot traffic out of existing ground cover and turf areas. Protect shrub areas from cross traffic.

C. Operations: Do not permit burning, temporary or permanent dumping or storage of construction debris within drip line of existing trees to remain. Give written notification if any construction activity by any contractor threatens to damage existing plants to remain.

3.3 IRRIGATION

A. One week prior to construction start the Contractor shall install and maintain a controlled water system accessed through existing irrigation system. System shall be drip type and be configured to give the appropriate amount of water for each type of plant.

B. If the irrigation system is disrupted for any reason during construction the Contractor shall restore irrigation within twenty-four (24) hours of disrupted service.

3.4 EXCAVATING AND GRADING

A. Cut: Do not permit machine excavation within the drip line of existing trees to remain. All such work shall be by hand labor. Do not permit more than two (2) inches of existing soil to be removed within the drip line except as authorized in writing by Landscape Architect.

B. Fill: Do not permit stockpiling of soil within the drip line of all existing trees nor on existing turf or groundcover areas. Do not permit more than three (3) inches of fill to be placed within the drip line during grading operations without written acceptance by Landscape Architect.

3.5 REPAIR OF DAMAGED MATERIAL

A. During the course of construction, if roots two inches (2") or larger in diameter are cut, the Contractor shall take the following immediate action to minimize further damage to the plant material.
   1. Stop construction activity, inform project inspector to contact a qualified arborist for inspection.
   2. If the arborist determines that damage occurred the Contractor will be directed within forty eight (48) hours to perform the following:
      a. Prune all affected roots to provide a clean smooth even cut.
      b. Prune plant material to I.S.A. specifications to compensate for root loss.
      c. Aerate soil to relieve compaction and to improve oxygen exchange to root system.
      d. Fertilize trees with deep water bore at a rate of one pound of actual nitrogen per 1,000 sq. ft.
      e. Inject plant hormones (growth stimulator) through irrigation system.

B. This process shall be implemented within forty eight (48) hours of direction by arborist. Failure to perform repairs within specified time will institute liquidated damages of two hundred (200) dollars for each calendar day by which the completion of repairs is delayed. Compensation for Arborist services shall be the Contractor’s responsibility.

C. The Owner reserves the right to hire a person or persons to perform the repair work in the event the Contractor does not respond in a timely manner. The expense for this work will be billed to the Contractor at no future expense to the Owner.

3.6 MAINTENANCE OF EXISTING PLANTING

A. General: Maintain all existing plantings to remain throughout course of construction and for a period of 90 days concurrent with maintenance period specified in Section 329300. Standard Horticultural practices shall be provided as deemed necessary by Landscape Architect.

B. Fertilizers: Do not use complete fertilizers on existing plant materials unless soils test Indicates specific nutrient deficiencies.

A. At close of construction in each area, remove all protective barriers at the direction of the Landscape Architect. Transport all barrier materials off site at no additional expense to Owner.

B. Repair all grades and restore all damaged plant materials.

End of Section

SECTION 016400 – OWNER-FURNISHED ITEMS

PART 1 - GENERAL

1.1 SUMMARY

A. This Section includes the following:
   1. Provide all materials, labor, equipment, and services necessary to prepare for installation for those items, noted or scheduled within the Contract Documents, indicated as follows:
      a. CFCI - Contractor Furnished, Contractor Installed
      b. OFCI - Owner Furnished, Contractor Installed
      c. OFOI - Owner Furnished, Owner Installed

B. Related Sections: The following Project Manual Sections contain requirements that relate to this section:
   1. ALL DIVISION 00 SPECIFICATION SECTIONS.
   2. ALL DIVISION 01 SPECIFICATION SECTIONS.
   3. ALL SPECIFICATION SECTIONS IN THE FACILITY CONSTRUCTION SUBGROUP.
   4. ALL SPECIFICATION SECTIONS IN THE FACILITY SERVICES SUBGROUP.
   5. ALL SPECIFICATION SECTIONS IN THE SITE AND INFRASTRUCTURE SUBGROUP.

1.2 DEFINITIONS

A. Unless otherwise defined in the GENERAL CONDITIONS, the following definitions apply for this project:
   1. CFCI: CONTRACTOR FURNISHED, CONTRACTOR INSTALLED
      a. When and if the indication "CFCI" is noted on the drawings or listed in the specifications, such items are shown or listed for information and will be furnished by and installed by the Contractor. Such a designation is listed only for clarity, in order to set the item(s) apart from the OFCI, OFOI, and OFVI related item(s).
      b. All item(s) shown or listed in the drawings and specifications without any indication are in the Contract and are part of the Work unless specifically noted otherwise.
   2. OFCI: OWNER FURNISHED, CONTRACTOR INSTALLED
      a. When and if the indication "OFCI" is noted on the drawings or listed in the specifications, such item(s) are shown or listed for information and will be furnished by Owner and installed by the Contractor. The Contractor shall coordinate and verify all dimensions and details necessary for the proper installation.
   3. OFOI: OWNER FURNISHED, OWNER INSTALLED
      a. When and if the indication "OFOI" is noted on the drawings or listed in the specifications, such item(s) are shown or listed for the purpose of general information and will be furnished and installed by Owner. The Contractor shall coordinate and verify all dimensions and details necessary for proper installation.

1.3 SUBMITTALS

A. Submit in accordance with Specification Section - SUBMITTAL PROCEDURES:
   1. Coordination Drawings:
      a. Submit installer's coordination drawings or other documents indicating the work of this section with that of related work of other sections for proper interface of the completed work. Installer shall coordinate and obtain approvals from the work of other related sections prior to submitting to the Architect.
      b. The Owner will provide Product Data, Shop Drawings, Piping and Wiring Diagrams, Catalog Data Sheets for any items provided under this Specification Section.
   2. Closeout Submittals in accordance with Specification Sections in Division One:
      a. Project Record Documents in accordance with Specification Section - PROJECT DOCUMENTS.

1.4 QUALITY ASSURANCE

A. Regulatory Requirements:
   1. In accordance with Specification Section - REGULATORY REQUIREMENTS, and the following:
      a. CARB Materials and equipment used for this Project shall comply with the current applicable regulations of the California Air Resources Board (CARB) and the Environmental Protection Agency (EPA). Regulatory changes may affect the formulation, availability, or use of the specified coatings. Confirm availability of coatings to be used prior to use, and notify the Architect of any recent changes in the Local California Air District Standards where the Project is located, that may have occurred after the preparation of this specification section.

B. Meetings:
   1. Progress Meetings: Scheduled by the Contractor for the proper performance of the work.
      a. Minimum agenda shall be to review the work progress; discuss field observations, problems, and decisions; identification of any potential problems which may impede planned progress; corrective measures to regain projected schedules; and maintenance of quality and work standards in accordance with manufacturer's warranty requirements.
   2. Final Inspection: Scheduled by the Contractor upon proper completion of the work.
      a. Minimum agenda shall be a walkover inspection to identify problems which may impede the issuance of any warranties or guarantees, and discussion of maintaining the work until substantial completion notice for the project is filed.
   3. Participants (or designated representative of) invited to attend each of the above meetings shall be as follows:
      a. Contractor.
      b. Owner.
      c. Architect.
      d. Installer.
      e. Material Manufacturer(s).
      f. Subcontractors, as appropriate (including any accessory subcontractors).

1.5 DELIVERY, STORAGE, AND HANDLING

A. Packing, shipping, handling, and unloading:
   1. Products shall be handled in such a manner as to assure that they are free from dents, scratches and other damage. Damaged products will not be accepted. Contractor shall inspect prior to unloading, for any damaged goods, and if OK, will allow unloading and be responsible for the goods.

B. Acceptance at Site:
   1. The Contractor shall accept delivery of any items and the responsibility for all items to be furnished to him by the Owner.

C. Storage and protection:
   1. Owner Furnished Equipment: The Owner will coordinate and inform the Contractor as to delivery dates for Owner Furnished Equipment to the Project Site. The Contractor shall be responsible for unloading, uncrating, and protecting such equipment.
   2. When only a supporting device, or sub-assembly is to be installed by the Contractor the Owner shall provide only that portion and shall store and safeguard those portions to be installed later by others.
   3. All products shall be protected, handled, and stored in complete compliance with the manufacturer's printed instructions to protect the Owner from warranty infringements or loss of the full function of the item specified.

1.6 PROJECT CONDITIONS OR SITE CONDITIONS

A. Existing Conditions:
   1. Examine site and compare it with the drawings and specifications. Thoroughly investigate and verify conditions under which the work is to be performed. No allowance will be made for extra work resulting from negligence or failure to be acquainted with all available information concerning conditions necessary to estimate the difficulty or cost of the work.
   2. Examine all preparatory work to determine its suitability and completeness. Notify the responsible Contractor of any deficiencies which must be corrected prior to installation.
   3. Be satisfied that all conditions affecting installation, operation or function are suitable for installation of the items scheduled.
   4. After installation, and acceptance by the inspector and the Architect, the Contractor shall provide protective guards, covers or barricades as required by the manufacturer.
   5. The Contractor shall promptly repair, refurbish, or replace items damaged by his operations to a condition satisfactory to the Owners representatives and at no cost to the Owner.

1.7 WARRANTY

   1. The Contractor shall provide access to the installed items or prepared substrates for the inspection of the manufacturers representatives, for the purpose of affirming the warranties scheduled.
   2. All work shall be performed in full accordance with the manufacturers warranty requirements and all governing codes.

PART 2 - PRODUCTS

NOT APPLICABLE

PART 3 - EXECUTION

3.1 PREPARATION

A. Coordination:
1. Coordinate work under this specification section with work specified under other sections to ensure proper and adequate interface of work.
a. Prepare all substrate blocking as required by the items Furnished By Owner.
b. Prepare all wiring and piping connections as required by the items Furnished By Owner.

B. Protection:
1. Protect all adjacent surfaces from drips, spray, air pollution of surrounding environment, and other damage from work under this specification section.

C. Surface preparation:
1. Prepare surface in accordance with manufacturer's instructions and recommendations.
2. Clean substrates of substances (oil, grease, rolling compounds, incompatible primers, loose mill scale, etc.) which could impair bond or installation of materials specified within the Contract Documents.

3.2 INSTALLATION

A. General:
1. In accordance with manufacturer's instructions and recommendations unless specifically noted otherwise.
2. In accordance with approved submittals.
3. In accordance with Regulatory Requirements.
4. Set plumb, level, and square.

B. Layout:
1. Lines shall be straight and true.

C. Material and Equipment to be installed:
1. All items so noted or scheduled to be OFCI shall be unloaded, completely installed and placed in operable condition under this Contract.

3.3 CLEANING

A. Clean in accordance with Specification Section - PROJECT CLOSEOUT.
1. Clean any soiled surfaces at the end of each day, minimum.
2. In accordance with manufacturer's instructions and recommendations.

3.4 SCHEDULES

A. This schedule is provided for the convenience of the General Contractor for items not scheduled elsewhere on the drawings or in the Specification Sections. Refer to Drawings for additional items not listed below:

B. Classroom Equipments: STATUS
   1. Flag Holder OFCI
   2. Pencil Sharpeners OFCI
   3. Classroom Telephone hand set OFOI

END OF SECTION

INTENTIONALLY LEFT BLANK

SECTION 017123 – FIELD ENGINEERING

PART 1 - GENERAL

1.1 SUMMARY

1. This section includes the following:Section includes requirements governing execution of the work including, but not limited to, the following:
   a. Construction layout
   b. Field engineering and surveying

B. Related Sections: The following Project Manuel Sections contain requirements that relate to this section:
1. ALL DIVISION 00 SPECIFICATION SECTIONS
2. ALL DIVISION 01 SPECIFICATION SECTIONS
3. 02 41 19 SELECTIVE DEMOLITION
4. 03 11 01 CONCRETE FORMWORK
5. 03 30 00 CAST-IN-PLACE CONCRETE
6. ALL SPECIFICATION SECTIONS IN THE FACILITY SERVICES SUBGROUP
7. ALL SPECIFICATION SECTIONS IN THE SITE AND INFRASTRUCTURE SUBGROUP.

1.2 SUBMITTALS

A. Submit in accordance with specification section – SUBMITTAL PROCEDURES:
1. Coordination Drawings:
   a. Utility Coordination Drawing(s)
2. Quality Assurance/Control Submittal:
   a. Qualification Data for Civil Engineer/Surveyor
   b. Intermediate Certificate of Survey Compliance
   c. Final Certificate of Survey Compliance
3. Closeout Submittals in accordance with the following:
   a. As-built Survey Drawing(s)
   b. Project "Record" Survey Drawing

1.3 QUALITY ASSURANCE

A. Qualifications:
1. Civil Engineer/Surveyor Qualifications:
   a. A professional Civil Engineer or Land Surveyor who is licensed to practice in the State of California.
   b. Has successfully completed three (3) projects of similar scope and size to that indicated for this project.

B. Regulatory Requirements:
1. In accordance with Specification Section – REGULATORY REQUIREMENTS and the following:

a. CARB Materials and equipment used for this project shall comply with the current applicable regulations of the California Air Resources Board and the Environmental Protection Agency (EPA), in the area where the project is located.
b. CF County of Fresno, codes and ordinances

C. Certificates:
1. Intermediate Certificate of Survey Compliance:
a. Provide certification letter on contractor's letterhead stating the project complies with the requirements of the contract documents at the completion of building pad construction and installation of underground utilities outside of building pads is complete. Certification letter must be stamped and signed by the qualified Civil Engineer/Surveyor.
2. Final Certificate of Survey Compliance:
a. Provide certification letter on contractor's letterhead stating the project complies with the requirement of the contract documents at the completion of all above ground improvements and finish grading.

D. Meetings:
1. Pre-Installation: Scheduled by the Contractor prior to the start of work.
a. Coordinate the work with all other related work.
b. Identify any potential problems, which may impede planned progress and proper installation of work regarding quality of installation and warranty requirements.
2. Progress: Scheduled by the Contractor during the performance of the work.
a. Review for proper installation of work progress.
b. Identify any installation problems and acceptable corrective measures.
c. Identify any measures to maintain or regain project schedule if necessary.
3. Completion: Scheduled by the Contractor upon proper completion of the work.
a. Inspect and identify any problems, which may impede issuance of warranties or guaranties.
b. Maintain installed work until the Notice of Substantial Completion has been filed.

1.4 PROJECT CONDITIONS OR SITE CONDITIONS

A. Existing Conditions:
1. Examine site and compare it with the drawings and specifications. Thoroughly investigate and verify conditions under which the work is to be performed. No allowance will be made for extra work resulting from negligence or failure to be acquainted with all available information concerning conditions necessary to estimate the difficulty or cost of the work.

PART 2 - PRODUCTS

NOT APPLICABLE

PART 3 - EXECUTION

3.1 EXAMINATION

A. Existing Conditions:
   1. The existence and location of underground utilities indicated as existing are not guaranteed. Before beginning sitework, investigate and verify the existence, location, and elevation of all underground utilities and other construction affecting the Work.
      a. Call a local utility locator service (such as USA – "Underground Service Alert") for the task of locating any project related utilities.
      b. Verify the location and invert elevation at points of connection of sanitary sewer system and storm drainage system.
      c. Accurately document vertical and horizontal measurements and elevations uncovered or verified.

B. Coordination:
   1. Before proceeding to lay out the Work, verify layout information shown on the drawings in relation to the property survey, topographic survey, and existing benchmarks.
   2. Drawings have been provided showing improvements and underground systems for foundations, storm drainage, sewer, water, gas, mechanical lines, electrical lines, and site improvements. Coordinate and verify the accuracy of the drawing locations and elevations as they relate to each other, with existing utility lines, and building pad earthwork zones of influence.
      a. Provide 1"=20' scaled and dimensioned Utility Coordination Drawing.
      b. No improvements shall be executed until the Utility Coordination Drawing is reviewed by the Architect for general conformance with the Contract Documents.
   3. Coordinate Layout of Work performed under other sections of the Specifications.
   4. If layout conflicts are encountered, report to Architect and then prepare recommendation(s) for correction.
   5. Close and careful coordination is required between work of the Contract and that of any future work to follow.
   6. Work under this Contract shall accommodate the installation of future work.

3.2 PREPARATION

A. Existing Utility Information:
   1. Furnish information to public utilities that is necessary to adjust, move, or relocate existing utility structures, utility poles, lines, services, or other utility appurtenances located in or affected by construction. Coordinate with authorities having jurisdiction.

3.3 CONSTRUCTION

A. Layout of Work:
   1. Engage a Civil Engineer/Surveyor to Layout the Work using accepted surveying practices and be responsible for all reference points, benchmarks, lines, elevations, and measurements required for Work under this Contract.
   2. Reference points:

a. Locate existing permanent benchmarks, control points, and similar reference points before beginning the work.
b. Do not change or relocate existing benchmarks or control points without approval of the Architect.
c. Replace lost or destroyed permanent benchmarks and control points. Base replacements on the original survey control points.

3. Benchmarks:
   a. Establish and maintain a minimum of two (2) permanent benchmarks on the project site, referenced to data established by survey control points.
   b. Where the actual location or elevation of layout points cannot be marked, provide temporary reference points sufficient to locate the Work.
   c. Use established benchmarks and control points to set lines and levels at each floor of construction and elsewhere as needed to locate each element of the Project.
4. Locate construction access to site parking, storage areas, and temporary facilities and controls.
5. Locate and layout control lines and levels for structures, foundations, column and wall grids, and floor levels including those required for mechanical and electrical work. Transfer survey markings and elevations for use with control lines and levels.
   a. Level foundations and piers from two or more locations.
6. Locate and layout site improvements, including pavement, grading, fill and topsoil placement, utility slopes, and rim and invert elevations.
7. Inform installers of lines and levels to which they must comply.
8. Check the location, level, and plumb of every major element as the Work progresses.
9. Remove temporary reference points when no longer needed. Restore marked construction to its original condition.

3.4 FIELD QUALITY CONTROL

A. Maintain a log of layout control work. Record deviations from required lines and levels. Include beginning and ending dates and times of surveys, weather conditions, name and duty of each survey party member, and types of instruments and tapes used. Make the log available for reference by the Inspector and Architect.

B. Maintain As-built Survey Drawing(s) of all underground, surface, and above ground improvements and grades with measurements for both vertical and horizontals dimensions.
   1. Record all addendum and issued change documents.
   2. Upon project completion stamp and sign As-built Survey Drawing(s).

C. Check documented measurements and elevations at completion of building pads and underground utilities against contract documents. The Contractor shall correct out of compliance Work before proceeding with the next element of Work. As-built Survey Drawing(s) shall be current. When all Work at this stage is in compliance with the contract documents, issue the Intermediate Certificate of Survey Compliance.

D. Check documented measurements and elevations at completion of finish grading and site improvements, except for landscape and irrigation work, against contract documents. The Contractor shall correct out of compliance Work before proceeding with the next element of Work. As-built Survey Drawing(s) shall be complete. When all Work at this stage is in compliance with the contract documents, issue the Final Certificate of Survey Compliance.

E. The Civil Engineer/Surveyor shall prepare Project "Record" Survey Drawing in accordance with Specification Section - PROJECT DOCUMENTS.
   1. The Project "Record" Survey Drawing shall contain all of the vertical and horizontal measurements and elevations of reference points, benchmarks, utility lines, grade contours, grade breaks, building floors, major vegetation, and sitework improvements.
   2. The Project "Record" Survey Drawing shall be stamped and signed by the qualified Civil Engineer/Surveyor.
   3. The As-built Survey Drawing(s) shall used in preparation of the Project "Record" Survey Drawing.

3.5 PROTECTION

A. Preserve and protect permanent benchmarks, control points, reference points, and staking during construction operations.

END OF SECTION

INTENTIONALLY LEFT BLANK

SECTION 017329 – CUTTING AND PATCHING

PART 1 - GENERAL

1.1 SUMMARY

A. This Section includes the following:
   1. Provide all material, labor, equipment and services necessary for cutting and patching existing materials, accessories and other related items necessary to remodel the Project as indicated by the Contract Documents.

B. Related Sections: The following Project Manual Sections contain requirements that relate to this section:
   1. ALL DIVISION 00 SPECIFICATION SECTIONS.
   2. ALL DIVISION 01 SPECIFICATION SECTIONS.
   3. ALL SPECIFICATION SECTIONS IN THE FACILITY CONSTRUCTION SUBGROUP.
   4. ALL SPECIFICATION SECTIONS IN THE FACILITY SERVICES SUBGROUP.
   5. ALL SPECIFICATION SECTIONS IN THE SITE AND INFRASTRUCTURE SUBGROUP.

1.2 DEFINITIONS

A. Cutting: Removal of existing construction necessary to permit installation or performance of Work.

B. Patching: Fitting and repair work required to restore surfaces to original conditions after installation of Work.

1.3 SUBMITTALS

A. Submit in accordance with Specification Section - SUBMITTAL PROCEDURES:
   1. Coordination Drawings:
      a. Submit any installer's coordination drawings indicating the work of this section with that of related work of other sections for proper interface of the completed work. Installer shall coordinate and obtain approvals from the work of other related sections prior to submitting to the Architect.

1.4 QUALITY ASSURANCE

A. Cutting and Patching Conference: Before proceeding, meet at Project site with parties involved in cutting and patching, including mechanical and electrical trades.
   1. Review areas of potential interference and conflict.
   2. Coordinate procedures and resolve potential conflicts before proceeding.

B. Structural Elements: Do not cut and patch structural elements in a manner that could change their load-carrying capacity or load-deflection ratio.

C. Operational Elements: Do not cut and patch operating elements and related components in a manner that results in reducing their capacity to perform as intended or that results in increased maintenance or decreased operational life or safety.

D. Visual Requirements: Do not cut and patch construction in a manner that results in visual evidence of cutting and patching. Do not cut and patch construction exposed on the exterior or in occupied spaces in a manner that would, in Architect's opinion, reduce the building's aesthetic qualities. Remove and replace construction that has been cut and patched in a visually unsatisfactory manner.

E. The Contractor shall do all cutting, fitting or patching of existing construction and his work as may be required to make the several parts come together properly and ready to receive or be received by work of other contractors as shown, or reasonably implied by the drawings and specifications for the completed structure. All work shall be as directed by the Architect to achieve the intended work and degree of finish shown.

F. Any cost caused by defective or ill-timed work shall be borne by the party responsible therefor.

1.5 WARRANTY

A. Existing Warranties: Remove, replace, patch, and repair materials and surfaces cut or damaged during cutting and patching operations, by methods and with materials so as not to void existing warranties.

PART 2 - PRODUCTS

2.1 MATERIALS

A. General: Comply with requirements specified in other Sections of these Specifications.

B. Existing Materials: Use materials identical to existing materials. For exposed surfaces, use materials that visually match existing adjacent surfaces to the fullest extent possible.
   1. If identical materials are unavailable or cannot be used, use materials that, when installed, will match the visual and functional performance of existing materials.

PART 3 - EXECUTION

3.1 EXAMINATION

A. Examine surfaces to be cut and patched and conditions under which cutting and patching are to be performed.
   1. Compatibility: Before patching, verify compatibility with and suitability of substrates, including compatibility with existing finishes or primers.
   2. Proceed with installation only after unsafe or unsatisfactory conditions have been corrected.

3.2 PREPARATION

A. Temporary Support: Provide temporary support of Work to be cut.

B. Protection: Protect existing construction during cutting and patching to prevent damage. Provide protection from adverse weather conditions for portions of Project that might be exposed during cutting and patching operations.

C. Adjoining Areas: Avoid interference with use of adjoining areas or interruption of free passage to adjoining areas.

D. Existing Services: Where existing services are required to be removed, relocated, or abandoned, bypass such services before cutting to avoid interruption of services to occupied areas.

3.3 FIELD QUALITY CONTROL

A. General: Employ skilled workers to perform cutting and patching. Proceed with cutting and patching at the earliest feasible time, and complete without delay.
   1. Cut existing construction to provide for installation of other components or performance of other construction, and subsequently patch as required to restore surfaces to their original condition.

B. Cutting: Cut existing construction by sawing, drilling, breaking, chipping, grinding, and similar operations, including excavation, using methods least likely to damage elements retained or adjoining construction. If possible, review proposed procedures with original Installer; comply with original Installer's written recommendations.
   1. In general, use hand or small power tools designed for sawing and grinding, not hammering and chopping. Cut holes and slots as small as possible, neatly to size required, and with minimum disturbance of adjacent surfaces. Temporarily cover openings when not in use.
   2. Existing Finished Surfaces: Cut or drill from the exposed or finished side into concealed surfaces.
   3. Concrete or Masonry: Cut using a cutting machine, such as an abrasive saw or a diamond-core drill. *Do not overcut concrete corners* – hand chip all corners to prevent over-cutting lines. Cut any masonry pavers at grout lines, and *don't overcut* into adjacent brick that is to remain.
   4. Excavating and Backfilling: Comply with requirements in applicable Division 2 Sections where required by cutting and patching operations.
   5. Mechanical and Electrical Services: Cut off pipe or conduit in walls or partitions to be removed. Cap, valve, or plug and seal remaining portion of pipe or conduit to prevent entrance of moisture or other foreign matter after cutting.
   6. Proceed with patching after construction operations requiring cutting are complete.

C. Grinding and Sandblasting: Where grinding and sandblasting is required of existing construction, perform in accordance with industry standards for proper preparation of new construction or finishes.

D. Patching: Patch construction by filling, repairing, refinishing, closing up, and similar operations following performance of other Work. Patch with durable seams that are as invisible as possible. Provide materials and comply with installation requirements specified in other Sections of these Specifications.

1. Inspection: Where feasible, test and inspect patched areas after completion to demonstrate integrity of installation.
2. Exposed Finishes: Restore exposed finishes of patched areas and extend finish restoration into retained adjoining construction in a manner that will eliminate evidence of patching and refinishing.
   a. All hard paving and walk replacement shall be flush with adjacent existing construction. Compact existing subgrade so that there is no settling of adjacent horizontal surfaces greater than 1/4", and that all surfaces are ADA compliant.
   b. When altering surfaces in brick paving, match nearby adjacent horizontal concrete surfaces in color and texture. Take care to protect adjacent brick surfaces from concrete slurry and finishing operations. Clean exposed surfaces of brick immediately so that no signs of adjacent concrete work is seen.
   c. Match existing adjacent exposed aggregate concrete paving (color and texture) when construction is proposed for areas paved with exposed aggregate concrete.
   d. Match existing adjacent colored concrete paving (color and texture) when construction is proposed for areas paved with colored concrete.
3. Floors and Walls: Where walls or partitions that are removed extend one finished area into another, patch and repair floor and wall surfaces in the new space. Provide an even surface of uniform finish, color, texture, and appearance. Remove existing floor and wall coverings and replace with new materials, if necessary, to achieve uniform color and appearance.
   a. Where patching occurs in a painted surface, apply primer and intermediate paint coats over the patch and apply final paint coat over entire unbroken surface containing the patch. Provide additional coats until patch blends with adjacent surfaces.
4. Ceilings: Patch, repair, or rehang existing ceilings as necessary to provide an even-plane surface of uniform appearance.
5. Exterior Building Enclosure: Patch components in a manner that restores enclosure to a weathertight condition.

END OF SECTION

SECTION 017419 – CONSTRUCTION WASTE MANAGEMENT AND DISPOSAL

PART 1 - GENERAL

1.1 SUMMARY

A. This section includes the following:
   1. Requirements governing execution of the work including, but not limited to, the following:
      a. Salvaging non-hazardous demolition waste.
      b. Recycling non-hazardous construction and demolition waste.
      c. Disposing of non-hazardous construction and demolition waste.

B. Related Sections: The following Project Manuel Sections contain requirements that relate to this section:
   1. ALL DIVISION 00 SPECIFICATION SECTIONS
   2. ALL DIVISION 01 SPECIFICATION SECTIONS
   3. ALL SPECIFICATION SECTIONS IN THE FACILITY CONSTRUCTION SUBGROUP
   4. ALL SPECIFICATION SECTIONS IN THE FACILITY SERVICES SUBGROUP
   5. ALL SPECIFICATION SECTIONS IN THE SITE AND INFRASTRUCTURE SUBGROUP

1.2 DEFINITIONS

A. Construction Waste: Building and site improvement materials and other solid waste resulting from construction, modernization, remodeling, renovation, or repair operations. Construction waste includes packaging.

B. Demolition Waste: Building and site improvement materials resulting from demolition or selective demolition and site clearing operations.

C. Disposal: Removal off-site of construction and demolition waste and subsequent sale, recycling, reuse, or deposit in landfill acceptable to authorities having jurisdiction.

D. Recycle: Recovery of construction or demolition waste for subsequent processing in preparation for reuse.

E. Salvage: Recovery of construction or demolition waste and subsequent sale or reuse in another facility.

1.3 SYSTEM DESCRIPTION

A. Performance Requirements
   1. General:

a. Achieve end-of-project rate for salvage/recycling of minimum [50][75][90] percent by weight of total non-hazardous construction and demolition waste generated by the Work.
b. Practice efficient waste management in the use of materials in the course of the Work.
c. Use all reasonable means to divert construction demolition waste from landfills and incinerators.

1.4 SUBMITTALS

A. Submit in accordance with Specification Section – SUBMITTAL PROCEDURES:
1. Quality Assurance/Control Submittal:
a. Waste Management Plan
b. Waste Management Progress Reports

1.5 QUALITY ASSURANCE

A. Regulatory Requirements:
1. In accordance with Specification Section - REGULATORY REQUIREMENTS and the following:
a. CARB Materials and equipment used for this project shall comply with the current applicable regulations of the California Air Resources Board and the Environmental Protection Agency (EPA), in the area where the project is located.
b. CAL/OSHA California Division of Occupational Safety and Health Administration.
c. CF County of Fresno, codes and ordinances
d. EPA Environmental Protection Agency

B. Waste Management Plan:
1. Prior to commencing the Work, submit Waste Management Plan. The Plan must include, but not limited to, the following:
a. Contractor's name and project identification information.
b. Procedures to be implemented.
c. Materials to be salvaged, recycled, or disposed.
d. Estimated quantities of material broken down by material categories.
e. Names and locations of entities who receive salvaged and recycled materials.
f. Tonnage calculations that demonstrate that the Contractor will salvage, re-use, or recycle the minimum percentage by weight of the construction and demolition waste materials generated by the Work.

C. Waste Management Progress Reports:
1. Submit the Report with each application for progress payment.
a. Failure to submit the Report and it supporting documentation can render the application for progress payment incomplete and delay the progress payment.
2. Each Report must include, but not limited to, the following:
a. List of material categories.
b. Weight quantity of waste by material category.
c. Weight quantity of waste salvaged.

d. Weight quantity of waste recycled.
e. Total weight quantity of salvaged and recycled waste by material category.
f. Weight percentage of waste salvaged and recycled by material category.
g. Include manifests, weight tickets, receipts, and invoices specifically identifying the salvaged, reused, and recycled materials.
h. Signature line for Contractor.

D. Meetings:
1. Pre- Demolition……Schedule prior to the start of work.
a. Coordinate the work with other work being performed.
b. Identify any potential problems, which may impede the proper disposal of materials.
c. Review areas where waste and recycle bins will be located.
d. Review where salvaged materials will be stored.
e. Review demolition waste disposal and material recycling procedures and environmental goals per Waste Management Plan with all subcontractors and waste haulers.
2. Progress:……Scheduled by the Contactor during the performance of the work.
a. Review for maintaining proper procedures.
b. Inspect and identify any problems and acceptable corrective measures.
3. Completion:……Scheduled by the Contactor upon proper completion of the work.
a. Inspect and identify any problems.
b. Submit final Progress Report summarizing total construction and demolition waste weights, percentages salvaged, recycled, and disposed.

1.6 DELIVERY, STORAGE, AND HANDLING

A. Cleaning, handling, and packing:
1. Salvaged Items shall be handled in such a manner as to assure that they are free from damage.
2. Salvaged Items shall be cleaned and packed or cleaned and palleted before off-site transport.

B. Storage and protection
1. Salvaged Items shall be stored in a dry, protected area prior to transport.
2. Cover with protective waterproof covering providing for adequate air circulation and ventilation.

1.7 PROJECT CONDITIONS

A. Environmental requirements;
1. Comply with federal, state, and local regulations pertaining to solid waste, recycling, chemical waste, sanitary waste, and noise pollution.
2. Perform work in a manner as to minimize the spread of dust and flying particles.
3. No burning will be allowed on-site.

B. Existing conditions:

1. Examine project site and building(s) and compare it with the drawings and specifications. Thoroughly investigate and verify conditions under which the work is to be performed. No allowance will be made for extra work resulting from negligence or failure to be acquainted with all available information concerning conditions necessary to estimate the difficulty or cost of the work.
2. Conduct work so as not to interfere unnecessarily with adjacent buildings, roads, streets, drives, and walks.
   a. Do not close or obstruct streets, alleys, walks, or passageways without permission from authorities having jurisdiction and coordinating same with immediate neighbors whose business operation may be affected.
   b. Safety measures shall be taken to insure an uninterrupted flow of traffic around the site as required by local Police and Fire Departments
3. Storage or sale of removed items on-site is not permitted.
4. It is not expected that hazardous materials will be encountered in the Work.
   a. Hazardous materials will be removed and disposed of by Owner prior to start of the Work.
   b. If suspected hazardous materials are encountered, do not disturb; immediately notify Architect and Owner.
5. Hazardous materials are present in buildings and structures to be selectively demolished. The Owner has prepared a report for the Contractor to review and use.
   a. Hazardous material remediation is specified in Specification Section - HAZARDOUS MATERIAL PROCEDURES.

PART 2 - PRODUCTS

2.1 MATERIALS

A. Furnish all materials, tools, equipment, facilities, and services as required for performing the construction and demolition waste disposal work.

PART 3 - EXECUTION

3.1 EXAMINATION

A. Verification of conditions:
   1. Report unacceptable conditions to the Architect. Do not begin work until unacceptable conditions have been corrected.
   2. Execution of work under this specification section shall constitute acceptance of existing conditions.
   3. Obtain all necessary permits and authorizations by regulatory agencies required to perform the Work under this Section.

3.2 PREPARATION

   a. Coordination:
   b. Before proceeding, verify plans match existing conditions.

c. Review documents of existing construction provided by Owner against existing conditions.
d. If conflicts are encountered, report it to the Architect. Then prepare recommendation(s) for correction and submit to Architect for review.
e. Coordinate work under this specification section with work specified under other sections.

B. Protection:
1. Property:
a. Provide temporary weather protection to prevent damage to salvage and recycled items.
b. All damage inflicted on public and private property and the property of the Owner shall be repaired or restored to the original condition prior to the start of this Work. All repair or replacement work shall be done at no additional cost to the owner.

3.3 IMPLEMENTATION

A. General:
1. Implement waste management plan as submitted.
2. Provide handling, containers, storage, signage, transportation, and other items as required to implement waste management plan during the entire duration of the contract.
3. Designate and label specific areas on project site necessary for separating materials that are to be salvaged, recycled, reused, and donated.

B. Demolition Waste:
1. Salvaged items for delivery to Owner or other entity:
a. Clean salvaged items.
b. Pack or crate items after cleaning. Identify contents of containers.
c. Store items in a secure area until pick-up or delivery to Owner.
d. Transport item to Owner’s storage area [on-site][off-site][list address].
e. Protect items from damage during transport and storage.
2. Salvaged items for reuse in the work:
a. Clean salvaged items.
b. Store items in a secure and dry area until ready for installation.
3. Recyclable materials:
a. Prepare and maintain recyclable waste materials according to recycling facility requirements.
b. Maintain materials free of dirt, adhesives, solvents, petroleum contamination, and other substances deleterious to the recycling process.
c. Separate recyclable demolition waste from other waste materials. Separate recyclable waste by material type at project site to the maximum extent practical according to approved waste management plan.
d. Separate recyclable demolition waste from other waste materials. All recyclables may be co-mingled into one bin and separated off-site at the appropriate recycling facility.
1) Provide appropriately marked containers or bins for controlling recyclable waste until they are removed from the project site.
2) Include a list of acceptable and unacceptable materials at each container or bin.

3) Inspect containers and bins for contamination and remove contaminated materials if found.
4) Processed materials stockpiled on site shall not be mixed with other materials. Shape stockpiles to drain surface water. Cover stockpiles to prevent windblown dust.
5) Processed material shall be stockpiled away from construction. Do not stockpile within drip line of remaining trees.

e. Remove recyclable demolition waste off project property and transport to recycling receiver or processor.

f. The following list is of common material types which can be recycled. The list of material types is in no way complete but is representative of materials that can be sorted and recycled as per the intent of this specification section.
1) Concrete: Remove reinforcement and other metals from concrete and sort with other metals.
2) Wood: Sort and stack members according to size, type, and length of member.
3) Metals: Separate metal by type. Stack structural steel members according to size and length. Remove bolts, nuts, washers, and other hardware from members.
4) Gypsum Board: Stack large clean pieces on wood pallets in a dry location. Remove edge trim and sort with other metals.
5) Acoustical Ceiling Tile: Stack large clean pieces on wood pallets in a dry location.
6) Metal Suspension System: Separate metal members including trim and other metals from acoustical ceiling tile and sort with other metals.
7) Carpet: Roll large pieces tightly after removing debris, trash, adhesive, and any tack strips. Store carpet in a dry location.
8) Piping: Reduce piping to straight lengths and store by type and size. Separate supports, hangers, valves, sprinklers, and other components by type and size.
9) Conduit: Reduce conduit to straight lengths and store by type and size.

4. Site clearing waste:
a. Excavated top soil and land clearing debris not recycled and reused on-site shall be removed to an off-site recycling location or disposed of at a landfill that accepts inert material.

C. Construction Waste:
1. Recyclable materials:
a. Prepare and maintain recyclable waste materials according to recycling facility requirements.
b. Maintain materials free of dirt, adhesives, solvents, petroleum contamination, and other substances deleterious to the recycling process.
c. Recycle paper and beverage containers used by on-site workers.
d. Separate recyclable construction waste from other waste materials. Separate recyclable waste by material type at project site to the maximum extent practical according to approved waste management plan.
e. Separate recyclable construction waste from other waste materials. All recyclables may be co-mingled into one bin and separated off-site at the appropriate recycling facility.

1) Provide appropriately marked containers or bins for controlling recyclable waste until they are removed from the project site.
2) Include a list of acceptable and unacceptable materials at each container or bin.
3) Inspect containers and bins for contamination and remove contaminated materials if found.

f. Separate recyclable construction waste from other waste materials. All recyclables may be co-mingled into one bin and separated off-site at the appropriate recycling facility.
1) Provide appropriately marked containers or bins for controlling recyclable waste until they are removed from the project site.
2) Include a list of acceptable and unacceptable materials at each container or bin.
3) Inspect containers and bins for contamination and remove contaminated materials if found.

g. Remove recyclable construction waste off project property and transport to recycling receiver or processor.

h. The following list is of common material types which can be recycled. The list of material types is in no way complete but is representative of materials that can be sorted and recycled as per the intent of this specification section.
1) Cardboard Packaging: Breakdown into flat sheets. Bundle and store in a dry place.
2) Polystyrene Packaging: Separate and bag materials.
3) Pallets: As much as possible, require deliveries using pallets to remove pallets from the project site. For pallets that remain on-site, breakdown pallets into component wood pieces and comply with requirements for recycling wood.
4) Crates: Break down crates into component wood pieces and comply with requirements for recycling wood.
5) Wood: Clean cut-Offs of lumber and grind or chip into small pieces.
6) Gypsum Board: Stack large clean pieces on wood pallets in a dry location.

D. Disposal of Waste:
1. Except for items or materials to be salvaged, recycled, or otherwise reused remove and transport waste materials from project site and legally dispose of them in a manner acceptable to authorities having jurisdiction.
2. Do not allow waste material to accumulate on site.
3. Transport waste in a manner that will prevent spillage on adjacent surfaces and areas.

3.4 CLEANING
1. Clean in accordance with Specification Section – PROJECT CLOSEOUT:
a. Immediately clean any soiled surfaces to remain.

END OF SECTION

INTENTIONALLY LEFT BLANK

SECTION 017720 – PROJECT CLOSEOUT

PART 1 - GENERAL

1.1 SUMMARY

A. This Section includes the following:
   1. Provide all material, labor, equipment and services necessary to completely install all materials, accessories and other related items necessary to complete the Project as indicated by the Contract Documents.
      a. Project Certification procedures.
      b. Final Review & Punch List procedures.
      c. Final Cleaning & Repair of the Work.
      d. Demonstration and Training.

B. Related Sections: The following Project Manual Sections contain requirements that relate to this section:
   1. ALL DIVISION 00 SPECIFICATION SECTIONS.
   2. ALL DIVISION 01 SPECIFICATION SECTIONS.
      a. 01 29 93 Completion of the Work and Closeout Procedures (FUSD)
      b. 01 74 00.02 Cleaning Up (FUSD)
      c. 01 77 00.01 Final Inspection (FUSD)
      d. 01 77 00.02 Cost of Multiple Inspections (FUSD)
      e. 01 78 23 Equipment Manuals (FUSD)
      f. 01 91 00 General Commissioning Requirements (FUSD)
   3. ALL SPECIFICATION SECTIONS IN THE FACILITY CONSTRUCTION SUBGROUP.
   4. ALL SPECIFICATION SECTIONS IN THE FACILITY SERVICES SUBGROUP.
   5. ALL SPECIFICATION SECTIONS IN THE SITE AND INFRASTRUCTURE SUBGROUP.

1.2 SUBMITTALS

A. Submit in accordance with Specification Section - SUBMITTAL PROCEDURES:
   1. Quality Assurance/Control Submittals:
      a. Product Data: For each type of cleaning agent.
      b. Punch List: Initial submittal at Substantial Completion.
      c. Contractor's Request for Final Review form.
      d. Design Data.
         1) All design data as required by the Contract Documents.
      e. Test Reports:
         1) Submit four (4) copies of reports.
         2) Submit four (4) copies of reports required by regulatory requirements.
         3) Submit four (4) copies of ICC Evaluation Service Report.
         4) Submit four (4) copies of Testing Laboratory's report.
         5) All other Test Reports as required by the Contract Documents.
      f. Certificates:
         1) Submit three (3) copies of certificates.

g. Manufacturer's Instructions:
   1) Submit three (3) copies of manufacturer's instructions.
h. Manufacturer's Field Reports:
   1) Submit three (3) copies of manufacturer's field reports.
i. Engineering Calculations:
   1) Submit four (4) copies of engineering calculations computed and signed by a registered Civil or Structural Engineer in the State of California.

2. Closeout Submittals in accordance with Specification Sections in Division One:
   a. Certificates of Release: From authorities having jurisdiction.
   b. Certificate of Insurance: For continuing coverage.
   c. Field Report: For pest control inspection.
   d. Warranty in accordance with Specification Section - WARRANTIES.
3. Operation and Maintenance Material Items:
   a. Schedule of Operation and Maintenance Material Items: For maintenance material submittal items specified in other sections.
4. Project Record Documents:
   a. In accordance with Specification Section - PROJECT DOCUMENTS.
5. Project Certification Documents:
   a. Compile and neatly assemble with indexed and labeled tabs, three (3) sets of the required documents for project certification by the State Agencies. The required documents include, but are not limited to, the following;
      1) Document Required List for Project Certification - Form ORS-6. This document shall be used to organize and index the required documents.
      2) Project Information Forms
         a) Project Site Inspector(s) - Form SSS-5
         b) Contract Information - Form DSA-102
      3) Final Verified Reports from the Architect and Engineers
         a) Architect’s Final Verified Report - Form DSA-6A/E
         b) Structural Engineer's Final Verified Report - Form DSA-6A/E
         c) Mechanical Engineer's Final Verified Report - Form DSA-6A/E
         d) Electrical Engineer's Final Verified Report - Form DSA-6A/E
      4) Final Verified Reports from the Contractor(s) and Inspector(s)
         a) Project Site Inspector(s) Final Verified Report - Form DSA-6
         b) Contractor(s) Final Verified Report - Form DSA-6
         c) Special Inspector(s) Final Verified Report - Form DSA-6
      5) Other Final Verified Reports and Affidavits for:
         a) Laboratory - To be signed by Licensed Professional Engineer
         b) Shop Welding and Fabrication - To be signed by AWS/CWI Welding Inspector
         c) Field Welding - To be signed by AWS/CWI Welding Inspector
         d) High Strength Bolt Installation
         e) Glu-Laminated Fabrication
         f) Manufactured Trusses
         g) Masonry Inspection
         h) Engineered Fill - To be signed by the Geotechnical Engineer
         i) Other items required by the State Agencies
      6) Notices, Certificates, and Change Orders
         a) Notice of Completion - Signed by the Owner, Notarized and recorded with the County Recorders Office.
         b) Weighmaster Certificate(s)
         c) Automatic Fire Sprinkler System

d) Fire Alarm System Components
e) Fire Standpipe System
f) Fire Suppression System
g) Smoke Ventilation System
h) Skylight System
i) Bleacher System
j) Change Orders - Signed and fully executed.
k) Other documents and/or requirements required by the State Agencies

7) Field Visit Reports, Correction Reports, Punch Lists & Final Review Reports
a) Field Visit Reports from State Agencies
b) Field Visit Reports from Architect and Engineers
c) Inspector's Correction Reports
d) Contractor Punch Lists
e) Architect, Engineers and Owner Final Review Reports
f) A jointly signed and notarized Affidavit from the Contractor and Project Inspector (formerly the Inspector of Record), indicating that any and all items of correction noted in the above documents have been corrected (including Testing Laboratory Reports).

1.3 QUALITY ASSURANCE:

A. Safety, Fire and Environmental Protection, and Insurance standards shall be strictly adhered to in all phases of the construction work. It shall be the responsibility of the Contractor to determine the standards applicable to this project as set forth in all codes, regulations, and ordinances having jurisdiction, and as set forth elsewhere in the Specifications.

B. All specific requirements stipulated in, or required by code references included under all sections of DIVISIONS 02 through 49 inclusive of this specification, and as detailed under Article 3.4 of this Section, shall be required under this Contract.

PART 2 - PRODUCTS

2.1 MATERIALS

A. Cleaning Materials:
1. Use only those specified materials or types of materials recommended and approved by the manufacturer of the item to be cleaned.

B. Touch-Up Materials:
1. Use only those materials furnished by or as recommended and approved by the manufacturer of the item to be touched up. Colors and finish characteristics shall exactly match the base material and extra materials, labor, and services required to achieve this result shall be provided by the Contractor(s).

C. Replacement Materials:

1. Materials that are damaged and not repairable, or materials that are destroyed shall be replaced with equal and identical materials of the same manufacture and shall function in conjunction with the remaining portions of that material. Items no longer manufactured or available shall be replaced with comparable materials as approved by the Architect and at no additional cost to the Owner.
2. Materials that are required for maintenance replacement by the owner after the guarantee period has expired, or by the contractor during the guarantee period shall exactly match those materials installed as to make, style, color lot, etc., under this contract, and shall be delivered to the owner in marked, identified containers.

D. Extra Materials:
1. Carefully examine the requirements of the applicable Sections of all DIVISIONS and specifically of DIVISION 09 and deliver the materials required to the Owner.

PART 3 - EXECUTION

3.1 REPAIR AND RESTORATION

A. All damaged items shall be repaired and replaced as directed using proper materials and craftsmen skilled in that particular trade. Materials shall be as follows:
1. All repair or replacement parts shall be of the same equality and manufacturer as the item being repaired.
2. All touch-up paint shall be as provided by the item manufacturer for that purpose and shall exactly match the original color and finish.

3.2 SUBSTANTIAL COMPLETION PROCEDURES

A. Contractor's List of Incomplete Items: Prepare and submit a list of items to be completed and corrected (Contractor's punch list), indicating the value of each item on the list and reasons why the Work is incomplete.

B. Submittals Prior to Substantial Completion: Complete the following a minimum of **10** days prior to requesting inspection for determining date of Substantial Completion. List items below that are incomplete at time of request.
1. Certificates of Release: Obtain and submit releases from authorities having jurisdiction permitting Owner unrestricted use of the Work and access to services and utilities. Include occupancy permits, operating certificates, and similar releases.
2. Submit closeout submittals specified in other Division 01 Sections, including project record documents, operation and maintenance manuals, damage or settlement surveys, property surveys, and similar final record information.
3. Submit closeout submittals specified in individual Sections, including specific warranties, workmanship bonds, maintenance service agreements, final certifications, and similar documents.
4. Submit maintenance material submittals specified in individual Sections, including tools, spare parts, extra materials, and similar items, and deliver to location designated by **Architect**. Label with manufacturer's name and model number.

a. Schedule of Maintenance Material Items: Prepare and submit schedule of maintenance material submittal items, including name and quantity of each item and name and number of related Specification Section. Obtain **Architect's** signature for receipt of submittals.

5. Submit testing, adjusting, and balancing records.
6. Submit sustainable design submittals not previously submitted.
7. Submit changeover information related to Owner's occupancy, use, operation, and maintenance.

C. Procedures Prior to Substantial Completion: Complete the following a minimum of **10** days prior to requesting inspection for determining date of Substantial Completion. List items below that are incomplete at time of request.

1. Advise Owner of pending insurance changeover requirements.
2. Make final changeover of permanent locks and deliver keys to Owner. Advise Owner's personnel of changeover in security provisions.
3. Complete startup and testing of systems and equipment.
4. Perform preventive maintenance on equipment used prior to Substantial Completion.
5. Instruct Owner's personnel in operation, adjustment, and maintenance of products, equipment, and systems. Submit demonstration and training video recordings specified in Section 017900 "Demonstration and Training."
6. Advise Owner of changeover in utility services.
7. Participate with Owner in conducting inspection and walkthrough with local emergency responders.
8. Terminate and remove temporary facilities from Project site, along with mockups, construction tools, and similar elements.
9. Complete final cleaning requirements.
10. Touch up paint and otherwise repair and restore marred exposed finishes to eliminate visual defects.

D. Inspection: Submit a written request for inspection to determine Substantial Completion a minimum of **10** days prior to date the Work will be completed and ready for final inspection and tests. On receipt of request, Architect will either proceed with inspection or notify Contractor of unfulfilled requirements. Architect will prepare the Certificate of Substantial Completion after inspection or will notify Contractor of items, either on Contractor's list or additional items identified by Architect, that must be completed or corrected before certificate will be issued.

1. Request reinspection when the Work identified in previous inspections as incomplete is completed or corrected.
2. Results of completed inspection will form the basis of requirements for final completion.

3.3 FINAL COMPLETION PROCEDURES

A. Submittals Prior to Final Completion: Before requesting final inspection for determining final completion, complete the following:

1. Submit a final Application for Payment according to Section Ó SCHEDULE OF VALUES.
2. Certified List of Incomplete Items: Submit certified copy of Architect's Substantial Completion inspection list of items to be completed or corrected (punch list), endorsed and dated by Architect. Certified copy of the list shall state that each item has been completed or otherwise resolved for acceptance.

3. Certificate of Insurance: Submit evidence of final, continuing insurance coverage complying with insurance requirements.
4. Submit pest-control final inspection report.
5. Submit final completion photographic documentation.

B. Inspection: Submit a written request for final inspection to determine acceptance a minimum of 10 days prior to date the work will be completed and ready for final inspection and tests.
   1. The Contractor represents that the work has been carefully inspected by the Contractor to determine that the work is complete and in compliance with all requirements set forth.

C. The Architect shall review the initial Contractor's Punch List along with the Owner's Project Inspector, and determine together whether or not the Project is ready for final review. If approved, the Architect or its representative will make the final review on the date and time requested in the Contractor's Request for Final Review form, except under the following conditions:
   a. Upon reviewing a portion of the Project and finding quantities of work incomplete or not in compliance, the review shall cease, and the Architect will notify the Contractor.
   b. If the Contractor has assured the Architect of the completeness and/or accuracy of the work, and the review does not bear this contention out.
   2. The above conditions will be adhered to rigidly to prevent the Architect from being required to act as a supervisory agent of the Contractor by being asked to determine the degree of completion.
      a. When the Contractor requests additional reviews, he shall reimburse the Architect for all time and expense incurred as indicated on the Contractor's Request for Final Review form at the end of this Specification Section.
      b. The Architect is herein defined as any of those firms or individuals listed by references on the drawings, including all consultants identified herein.
      c. All requests for Project Final Review (and re-review) shall be made in writing on the form provided at the end of this Specification Section.
   3. When the Architect does approve of the degree of readiness for the Project based on the initial Contractor's Punch List and the readiness of the Project, the Architect will make his final review, adding to the Contractor's Punch List any other items that require further completion.
   4. The Contractor shall take the initial Contractor's Punch List, together with the Architect's Punch List, and initial and date each item on each list as to when it was completed.
   5. Once both lists are completed and signed by the Project Inspector, the Contractor shall submit to the Architect the completed lists for final review and approval prior to filing for Substantial Completion.

3.4 LIST OF INCOMPLETE ITEMS (PUNCH LIST)

A. Organization of List: Include name and identification of each space and area affected by construction operations for incomplete items and items needing correction including, if necessary, areas disturbed by Contractor that are outside the limits of construction.
   1. Organize list of spaces in sequential order, starting with exterior areas first and proceeding from lowest floor to highest floor.
   2. Organize items applying to each space by major element, including categories for ceiling, individual walls, floors, equipment, and building systems.
   3. Include the following information at the top of each page:
      a. Project name.

b. Date.
c. Name of Architect.
d. Name of Contractor.
e. Page number.

4. Submit list of incomplete items in the following format:
5. MS Excel electronic file. Architect will return annotated file.
6. PDF electronic file. Architect will return annotated file.
7. Web-based project software upload. Utilize software feature for creating and updating list of incomplete items (punch list).
8. **Three** paper copies. Architect will return **two** copies.

3.5 CLEANING

A. During Construction:
1. Oversee cleaning and ensure that building and grounds are maintained free from accumulations of waste materials and rubbish.
2. Sprinkle dusty debris with water.
3. At reasonable intervals during progress of work, clean up site and access and dispose of waste materials, rubbish, and debris.
4. Provide suitable containers and locate on site for collection of waste materials, rubbish, and debris.
5. Do not allow waste materials, rubbish and debris to accumulate and become an unsightly or hazardous condition.
6. Remove waste materials, rubbish and debris form the site and legally dispose of at public or private dumping areas off the Owner's property.
7. Vacuum clean interior building areas when ready to receive finish painting and continue vacuum cleaning on an as-needed basis until building is ready for acceptance or occupancy.
8. Lower waste materials in a controlled manner with as few handling as possible; do not drop or throw materials from heights.
9. Schedule cleaning operations so that dust and other contaminants resulting from cleaning process will not fall on wet, newly painted surfaces.

B. Final Cleaning:
1. Use experienced professional cleaners for final cleaning.
2. At completion of construction and just prior to acceptance or occupancy, conduct a final review of exposed interior and exterior surfaces.
3. Remove grease, dust, dirt, stains, labels, fingerprints, and other foreign materials from interior and exterior surfaces.
4. Repair, patch, and touch-up marred surfaces to match adjacent finishes.
5. Broom clean paved surfaces; rake clean other surfaces of grounds.
6. Replace air conditioning filters if units were operated during construction.
7. Clean ducts, blowers, and coils if air conditioning units were operated during construction
8. Maintain cleaning until the building, or portion thereof, is accepted by the Owner.

3.6 REPAIR OF THE WORK

A. Complete repair and restoration operations before requesting inspection for determination of Substantial Completion.

B. Repair, or remove and replace, defective construction. Repairing includes replacing defective parts, refinishing damaged surfaces, touching up with matching materials, and properly adjusting operating equipment. Where damaged or worn items cannot be repaired or restored, provide replacements. Remove and replace operating components that cannot be repaired. Restore damaged construction and permanent facilities used during construction to specified condition.
   1. Repair, patch, and touch-up marred surfaces to match adjacent finishes.
   2. Remove and replace chipped, scratched, and broken glass, reflective surfaces, and other damaged transparent materials.
   3. Touch up and otherwise repair and restore marred or exposed finishes and surfaces. Replace finishes and surfaces that that already show evidence of repair or restoration.
      a. Do not paint over "UL" and other required labels and identification, including mechanical and electrical nameplates. Remove paint applied to required labels and identification.
   4. Replace parts subject to operating conditions during construction that may impede operation or reduce longevity.
   5. Replace burned-out bulbs, bulbs noticeably dimmed by hours of use, and defective and noisy starters in fluorescent and mercury vapor fixtures to comply with requirements for new fixtures.

3.7 DEMONSTRATION

A. During Construction and as each piece of equipment is installed, provide the following tests:
   1. Verify that all external service connections have been properly completed, and that piping and/or wiring is properly sized, and contain all necessary safety devices.
   2. Verify that the equipment is free of shipping materials, tie downs, or other internal obstructions.
   3. Conduct tests employing the manufacturer's operating instructions as a sequential guide.
   4. Verify that all portions of the equipment function properly and that the total performance criteria is satisfied.
   5. Make adjustments, replacements, or repairs necessary to achieve full operational capability and repeat tests until performance is achieved and approval obtained.

B. Prior to acceptance, verify that all conditions specified in the Article titled FIELD QUALITY CONTROL, Final Review, have been satisfied and that equipment is ready for continuous use. Provide the following services preparatory to acceptance:
   1. Clean or replace all filters and/or strainers.
   2. Adjust all belts and drive mechanisms.
   3. Lubricate all moving parts as required by manufacturer's operating instructions.
   4. Demonstrate to the Owner's representative and the Architect or Engineer the method and sequence of operation, and provide testing devices and/or data to verify that performance equals that specified.
   5. Provide operating instructions in bound form along with manufacturer's parts list and written warranties.

3.8 SCHEDULES

A. See next page for Request for Final Review from the Contractor(s):

(The rest of this page is left intentionally blank)

CONTRACTOR'S REQUEST
FOR
FINAL REVIEW FORM

PROJECT:_____
(Name of Project and DA Project Number)

TO: **DARDEN ARCHITECTS, INC.**
6790 N. West Avenue
FRESNO, CA 93711

FROM:_____
(Contractor)
_____
(Address)
_____

WE HEREBY request Final Review on _____ and _____.
(Date) (Time)

WE HEREBY, request and certify:

1. The project is ready for Final Review.
2. The undersigned will compensate the Architect at a rate of $176.00 an hour for further review, investigation and comments if it is determined that the Project is not ready for final review as indicated earlier within this Specification Section. The Architect is herein defined as any of those firms or individuals listed by reference on the Drawings, including all Consultants identified herein.

Submitted By (Contractor)

Signature_____
Firm_____
Address_____
Date_____
Telephone_____

Below is
for Use by Design Consultant only

___ Conditions for Final Review Accepted
___ Final Review Accepted as Noted
___ Final Review Not Accepted

By_____
Date_____
Remarks_____
_____
_____
_____

END OF SECTION

SECTION 017823 - OPERATION AND MAINTENANCE DATA

PART 1 - GENERAL

1.1 RELATED DOCUMENTS

A. Drawings and general provisions of the Contract, including General and Supplementary Conditions and other Division 01 Specification Sections, apply to this Section.

1.2 SUMMARY

A. Section includes administrative and procedural requirements for preparing operation and maintenance manuals, including the following:
   1. Operation and maintenance documentation directory manuals.
   2. Emergency manuals.
   3. Systems and equipment operation manuals.
   4. Systems and equipment maintenance manuals.
   5. Product maintenance manuals.

B. Related Requirements: The following Project Manual Sections contain requirements that relate to this section:
   1. ALL DIVISION 00 SPECIFICATION SECTIONS.
   2. ALL DIVISION 01 SPECIFICATION SECTIONS.
   3. ALL SPECIFICATION SECTIONS IN THE FACILITY CONSTRUCTION SUBGROUP.
   4. ALL SPECIFICATION SECTIONS IN THE FACILITY SERVICES SUBGROUP.
   5. ALL SPECIFICATION SECTIONS IN THE SITE AND INFRASTRUCTURE SUBGROUP.
   6. ALL SPECIFICATION SECTIONS IN THE PROCESS EQUIPMENT SUBGROUP.

1.3 DEFINITIONS

A. System: An organized collection of parts, equipment, or subsystems united by regular interaction.

B. Subsystem: A portion of a system with characteristics similar to a system.

1.4 CLOSEOUT SUBMITTALS

A. Submit operation and maintenance manuals indicated. Provide content for each manual as specified in individual Specification Sections, and as reviewed and approved at the time of Section submittals. Submit reviewed manual content formatted and organized as required by this Section.
   1. Architect will comment on whether content of operation and maintenance submittals is acceptable.

2. Where applicable, clarify and update reviewed manual content to correspond to revisions and field conditions.

B. Format: Submit operation and maintenance manuals in the following format:
1. Submit on digital media acceptable to Architect. Enable reviewer comments on draft submittals.
2. Submit three paper copies.

C. Initial Manual Submittal: Submit draft copy of each manual at least 30 days before commencing demonstration and training. Architectwill comment on whether general scope and content of manual are acceptable.

D. Final Manual Submittal: Submit each manual in final form prior to requesting inspection for Substantial Completion and at least 15 days before commencing demonstration and training. Architect will return copy with comments.
1. Correct or revise each manual to comply with Architect's comments. Submit copies of each corrected manual within 15 days of receipt of Architect's comments and prior to commencing demonstration and training.

E. Comply with Section CLOSEOUT PROCEDURES for schedule for submitting operation and maintenance documentation.

1.5 FORMAT OF OPERATION AND MAINTENANCE MANUALS

A. Manuals, Electronic Files: Submit manuals in the form of a multiple file composite electronic PDF file for each manual type required.
1. Electronic Files: Use electronic files prepared by manufacturer where available. Where scanning of paper documents is required, configure scanned file for minimum readable file size.
2. File Names and Bookmarks: Bookmark individual documents based on file names. Name document files to correspond to system, subsystem, and equipment names used in manual directory and table of contents. Group documents for each system and subsystem into individual composite bookmarked files, then create composite manual, so that resulting bookmarks reflect the system, subsystem, and equipment names in a readily navigated file tree. Configure electronic manual to display bookmark panel on opening file.

B. Manuals, Paper Copy: Submit manuals in the form of hard-copy, bound and labeled volumes.
1. Binders: Heavy-duty, three-ring, vinyl-covered, loose-leaf binders, in thickness necessary to accommodate contents, sized to hold 8-1/2-by-11-inch paper; with clear plastic sleeve on spine to hold label describing contents and with pockets inside covers to hold folded oversize sheets.
a. If two or more binders are necessary to accommodate data of a system, organize data in each binder into groupings by subsystem and related components. Cross-reference other binders if necessary to provide essential information for proper operation or maintenance of equipment or system.
b. Identify each binder on front and spine, with printed title "OPERATION AND MAINTENANCE MANUAL," Project title or name, and subject matter of contents, and indicate Specification Section number on bottom of spine. Indicate volume number for multiple-volume sets.

2. Dividers: Heavy-paper dividers with plastic-covered tabs for each section of the manual. Mark each tab to indicate contents. Include typed list of products and major components of equipment included in the section on each divider, cross-referenced to Specification Section number and title of Project Manual.
3. Protective Plastic Sleeves: Transparent plastic sleeves designed to enclose diagnostic software storage media for computerized electronic equipment. Enclose title pages and directories in clear plastic sleeves.
4. Supplementary Text: Prepared on 8-1/2-by-11-inch white bond paper.
5. Drawings: Attach reinforced, punched binder tabs on drawings and bind with text.
   a. If oversize drawings are necessary, fold drawings to same size as text pages and use as foldouts.
   b. If drawings are too large to be used as foldouts, fold and place drawings in labeled envelopes and bind envelopes in rear of manual. At appropriate locations in manual, insert typewritten pages indicating drawing titles, descriptions of contents, and drawing locations.

1.6 REQUIREMENTS FOR EMERGENCY, OPERATION, AND MAINTENANCE MANUALS

A. Organization of Manuals: Unless otherwise indicated, organize each manual into a separate section for each system and subsystem, and a separate section for each piece of equipment not part of a system. Each manual shall contain the following materials, in the order listed:
   1. Title page.
   2. Table of contents.
   3. Manual contents.

B. Title Page: Include the following information:
   1. Subject matter included in manual.
   2. Name and address of Project.
   3. Name and address of Owner.
   4. Date of submittal.
   5. Name and contact information for Contractor.
   6. Name and contact information for Construction Manager.
   7. Name and contact information for Architect.
   8. Name and contact information for Commissioning Authority.
   9. Names and contact information for major consultants to the Architect that designed the systems contained in the manuals.
   10. Cross-reference to related systems in other operation and maintenance manuals.

C. Table of Contents: List each product included in manual, identified by product name, indexed to the content of the volume, and cross-referenced to Specification Section number in Project Manual.
   1. If operation or maintenance documentation requires more than one volume to accommodate data, include comprehensive table of contents for all volumes in each volume of the set.

D. Manual Contents: Organize into sets of manageable size. Arrange contents alphabetically by system, subsystem, and equipment. If possible, assemble instructions for subsystems, equipment, and components of one system into a single binder.

E. Identification: In the documentation directory and in each operation and maintenance manual, identify each system, subsystem, and piece of equipment with same designation used in the Contract Documents. If no designation exists, assign a designation according to ASHRAE Guideline 4, "Preparation of Operating and Maintenance Documentation for Building Systems."

1.7 OPERATION AND MAINTENANCE DOCUMENTATION DIRECTORY MANUAL

A. Operation and Maintenance Documentation Directory: Prepare a separate manual that provides an organized reference to emergency, operation, and maintenance manuals. List items and their location to facilitate ready access to desired information. Include the following:
1. List of Systems and Subsystems: List systems alphabetically. Include references to operation and maintenance manuals that contain information about each system.
2. List of Equipment: List equipment for each system, organized alphabetically by system. For pieces of equipment not part of system, list alphabetically in separate list.
3. Tables of Contents: Include a table of contents for each emergency, operation, and maintenance manual.

1.8 EMERGENCY MANUALS

A. Emergency Manual: Assemble a complete set of emergency information indicating procedures for use by emergency personnel and by Owner's operating personnel for types of emergencies indicated.

B. Content: Organize manual into a separate section for each of the following:
1. Type of emergency.
2. Emergency instructions.
3. Emergency procedures.

C. Type of Emergency: Where applicable for each type of emergency indicated below, include instructions and procedures for each system, subsystem, piece of equipment, and component:
1. Fire.
2. Flood.
3. Gas leak.
4. Water leak.
5. Power failure.
6. Water outage.
7. System, subsystem, or equipment failure.
8. Chemical release or spill.

D. Emergency Instructions: Describe and explain warnings, trouble indications, error messages, and similar codes and signals. Include responsibilities of Owner's operating personnel for notification of Installer, supplier, and manufacturer to maintain warranties.

E. Emergency Procedures: Include the following, as applicable:
1. Instructions on stopping.
2. Shutdown instructions for each type of emergency.
3. Operating instructions for conditions outside normal operating limits.
4. Required sequences for electric or electronic systems.

5. Special operating instructions and procedures.

1.9 SYSTEMS AND EQUIPMENT OPERATION MANUALS

A. Systems and Equipment Operation Manual: Assemble a complete set of data indicating operation of each system, subsystem, and piece of equipment not part of a system. Include information required for daily operation and management, operating standards, and routine and special operating procedures.
   1. Engage a factory-authorized service representative to assemble and prepare information for each system, subsystem, and piece of equipment not part of a system.
   2. Prepare a separate manual for each system and subsystem, in the form of an instructional manual for use by Owner's operating personnel.

B. Content: In addition to requirements in this Section, include operation data required in individual Specification Sections and the following information:
   1. System, subsystem, and equipment descriptions. Use designations for systems and equipment indicated on Contract Documents.
   2. Performance and design criteria if Contractor has delegated design responsibility.
   3. Operating standards.
   4. Operating procedures.
   5. Operating logs.
   6. Wiring diagrams.
   7. Control diagrams.
   8. Piped system diagrams.
   9. Precautions against improper use.
   10. License requirements including inspection and renewal dates.

C. Descriptions: Include the following:
   1. Product name and model number. Use designations for products indicated on Contract Documents.
   2. Manufacturer's name.
   3. Equipment identification with serial number of each component.
   4. Equipment function.
   5. Operating characteristics.
   6. Limiting conditions.
   7. Performance curves.
   8. Engineering data and tests.
   9. Complete nomenclature and number of replacement parts.

D. Operating Procedures: Include the following, as applicable:
   1. Startup procedures.
   2. Equipment or system break-in procedures.
   3. Routine and normal operating instructions.
   4. Regulation and control procedures.
   5. Instructions on stopping.
   6. Normal shutdown instructions.
   7. Seasonal and weekend operating instructions.
   8. Required sequences for electric or electronic systems.
   9. Special operating instructions and procedures.

E. Systems and Equipment Controls: Describe the sequence of operation, and diagram controls as installed.

F. Piped Systems: Diagram piping as installed, and identify color coding where required for identification.

1.10 SYSTEMS AND EQUIPMENT MAINTENANCE MANUALS

A. Systems and Equipment Maintenance Manuals: Assemble a complete set of data indicating maintenance of each system, subsystem, and piece of equipment not part of a system. Include manufacturers' maintenance documentation, preventive maintenance procedures and frequency, repair procedures, wiring and systems diagrams, lists of spare parts, and warranty information.
   1. Engage a factory-authorized service representative to assemble and prepare information for each system, subsystem, and piece of equipment not part of a system.
   2. Prepare a separate manual for each system and subsystem, in the form of an instructional manual for use by Owner's operating personnel.

B. Content: For each system, subsystem, and piece of equipment not part of a system, include source information, manufacturers' maintenance documentation, maintenance procedures, maintenance and service schedules, spare parts list and source information, maintenance service contracts, and warranties and bonds as described below.

C. Source Information: List each system, subsystem, and piece of equipment included in manual, identified by product name and arranged to match manual's table of contents. For each product, list name, address, and telephone number of Installer or supplier and maintenance service agent, and cross-reference Specification Section number and title in Project Manual and drawing or schedule designation or identifier where applicable.

D. Manufacturers' Maintenance Documentation: Include the following information for each component part or piece of equipment:
   1. Standard maintenance instructions and bulletins; include only sheets pertinent to product or component installed. Mark each sheet to identify each product or component incorporated into the Work. If data include more than one item in a tabular format, identify each item using appropriate references from the Contract Documents. Identify data applicable to the Work and delete references to information not applicable.
      a. Prepare supplementary text if manufacturers' standard printed data are not available and where the information is necessary for proper operation and maintenance of equipment or systems.
   2. Drawings, diagrams, and instructions required for maintenance, including disassembly and component removal, replacement, and assembly.
   3. Identification and nomenclature of parts and components.
   4. List of items recommended to be stocked as spare parts.

E. Maintenance Procedures: Include the following information and items that detail essential maintenance procedures:
   1. Test and inspection instructions.
   2. Troubleshooting guide.
   3. Precautions against improper maintenance.
   4. Disassembly; component removal, repair, and replacement; and reassembly instructions.

5. Aligning, adjusting, and checking instructions.
6. Demonstration and training video recording, if available.

F. Maintenance and Service Schedules: Include service and lubrication requirements, list of required lubricants for equipment, and separate schedules for preventive and routine maintenance and service with standard time allotment.
1. Scheduled Maintenance and Service: Tabulate actions for daily, weekly, monthly, quarterly, semiannual, and annual frequencies.
2. Maintenance and Service Record: Include manufacturers' forms for recording maintenance.

G. Spare Parts List and Source Information: Include lists of replacement and repair parts, with parts identified and cross-referenced to manufacturers' maintenance documentation and local sources of maintenance materials and related services.

H. Maintenance Service Contracts: Include copies of maintenance agreements with name and telephone number of service agent.

I. Warranties and Bonds: Include copies of warranties and bonds and lists of circumstances and conditions that would affect validity of warranties or bonds.
1. Include procedures to follow and required notifications for warranty claims.

J. Drawings: Prepare drawings supplementing manufacturers' printed data to illustrate the relationship of component parts of equipment and systems and to illustrate control sequence and flow diagrams. Coordinate these drawings with information contained in record Drawings to ensure correct illustration of completed installation.
1. Do not use original project record documents as part of maintenance manuals.

1.11 PRODUCT MAINTENANCE MANUALS

A. Product Maintenance Manual: Assemble a complete set of maintenance data indicating care and maintenance of each product, material, and finish incorporated into the Work.

B. Content: Organize manual into a separate section for each product, material, and finish. Include source information, product information, maintenance procedures, repair materials and sources, and warranties and bonds, as described below.

C. Source Information: List each product included in manual, identified by product name and arranged to match manual's table of contents. For each product, list name, address, and telephone number of Installer or supplier and maintenance service agent, and cross-reference Specification Section number and title in Project Manual and drawing or schedule designation or identifier where applicable.

D. Product Information: Include the following, as applicable:
1. Product name and model number.
2. Manufacturer's name.
3. Color, pattern, and texture.
4. Material and chemical composition.
5. Reordering information for specially manufactured products.

E. Maintenance Procedures: Include manufacturer's written recommendations and the following:

1. Inspection procedures.
2. Types of cleaning agents to be used and methods of cleaning.
3. List of cleaning agents and methods of cleaning detrimental to product.
4. Schedule for routine cleaning and maintenance.
5. Repair instructions.

F. Repair Materials and Sources: Include lists of materials and local sources of materials and related services.

G. Warranties and Bonds: Include copies of warranties and bonds and lists of circumstances and conditions that would affect validity of warranties or bonds.
   1. Include procedures to follow and required notifications for warranty claims.

PART 2 - PRODUCTS (Not Used)

PART 3 - EXECUTION (Not Used)

END OF SECTION

SECTION 017836 – WARRANTIES

PART 1 - GENERAL

1.1 SUMMARY

A. In addition to providing all other warranties specified in the Project Manual and without affecting any rights of Owner under State or Federal law, Contractor shall warrant that the Work done under this Project Manual will be free from faulty materials or workmanship and hereby agrees, upon receiving notification from the Owner or his Agent, to immediately remedy, repair or replace, without cost to the Owners and to his entire satisfaction, all defects, damages or imperfections appearing in said work within a period of one (1) year unless specified otherwise, after date of final acceptance by the Owner of all work done under this Project Manual, regardless of whether or not the Owner or persons operating under contract with the Owner partially or wholly occupies any portion of the work prior to acceptance. For work performed after completion, the one (1) year period shall be extended by the period of time between the date of final acceptance by Owner and actual performance of the work. This obligation shall survive acceptance of the work and termination of the Contract.

1. Warranties shall be in the form outlined below and shall be submitted in duplicate to the Contractor and submitted on his own letterhead.

B. Related Sections: The following Project Manual Sections contain requirements that relate to this section:

1. ALL DIVISION 00 SPECIFICATION SECTIONS.
2. ALL DIVISION 01 SPECIFICATION SECTIONS.
3. ALL SPECIFICATION SECTIONS IN THE FACILITY CONSTRUCTION SUBGROUP.
4. ALL SPECIFICATION SECTIONS IN THE FACILITY SERVICES SUBGROUP.
5. ALL SPECIFICATION SECTIONS IN THE SITE AND INFRASTRUCTURE SUBGROUP.

1.2 SUBMITTALS

A. Warranty Form: *(following page.)*

B.

C.

D.

E.

F.

G. *(Contractor's Letterhead)*

H. Project Number: _____

I. Project Name: _____

J.

K.

L.

WARRANTY FOR

_____

We hereby warrant and the General Contractor warranties that

_____

_____

_____

has been done in accordance with the Drawings and the Specifications and that the Work as installed will fulfill the requirements of the warranty included in the Project Manual. We agree to repair, replace any or all of our work together with any other adjacent work which may be displaced or damaged by so doing that may prove to be defective in its workmanship or materials within a period of _____ years from date of acceptance of the above-named without any expense to the Owner, ordinary wear and tear and unusual abuse or neglect excepted. In the event of our failure to comply with above-mentioned conditions within ten (10) days after being notified in writing by the Owner or his agent, we collectively or separately, do hereby authorize the Owner to proceed to have said defects repaired and made good at our expense and we will honor and pay the costs and charges therefor upon demand.

_____
(Signature of Subcontractor)

_____
(Signature of Contractor)

Date: _____

M. Submit 2 copies of all manufacturer's or installer/applicator's warranties and bonds as specified within Division 02 –49.

N. Submit to Architect together with Project Record Documents.

O. Accompany submittals with transmittal letter in duplicate.

P. When Product Submittals are required, submit copy of warranty with product submittal.

PART 2 - PRODUCTS

NOT APPLICABLE

PART 3 - EXECUTION

NOT APPLICABLE

END OF SECTION

INTENTIONALLY LEFT BLANK

SECTION 017839 – PROJECT DOCUMENTS

PART 1 - GENERAL

1.1 RELATED DOCUMENTS

A. Drawings and general provisions of the Contract, including General and Supplementary Conditions and other Division 01 Specification Sections, apply to this Section.

1.2 SUMMARY

A. This Section includes the administrative and procedural requirements for Project Record Documents, including the following:
   1. Project As-Built Drawings.
   2. Project Record Drawings.
   3. Record Specifications.
   4. Record Product Data.

B. Related Requirements: The following Project Manual Sections contain requirements that relate to this Section:
   1. Specification Section 013226- FORMS AND REPORTS
   2. Specification Section 017720- PROJECT CLOSEOUT

1.3 DEFINITIONS

A. CONTRACT DOCUMENTS: Contract Documents include Contract Forms, Project Manual (Contract Requirements and Specifications), Drawings, Addenda, Change Orders and Modification Documents (Supplemental Instructions, Request for Information, Construction Change Directives).

B. PROJECT "AS-BUILT" DOCUMENTS: A set of Contract Documents used during construction for recording of actual construction information during construction. The recording of construction information shall be maintained on the Contract Drawings and in the Project Manual.

C. PROJECT "RECORD" DOCUMENTS: A set of Contract Documents used at the completion of construction for transferring and documenting the actual construction information recorded on the PROJECT "AS-BUILT" DOCUMENTS.

D. RECORD PRODUCT DATA: A set of Submittals and Shop Drawings that have documentation of field changes made after review.

E. AGENCY DOCUMENTATION: Documents required by the Agency Having Jurisdiction to be prepared and submitted by the contractor.

1.4 SUBMITTALS:

A. Submit the following in accordance with specification Section SUBMITTAL PROCEDURES.

B. Format for Submittals:
1. Accompany each submittal with a SHOP DRAWING AND SUBMITTAL TRANSMITTAL:
2. PDF electronic file names shall match the Sheet Numbers of the Contract Documents.
3. Provide labels on DVD's and DVD Cases and include the following:
4. First Line: CLOSE-OUT DOCUMENTS
5. If submittal contains multiple disks append to first line Disk, i.e. (1 of 2)
6. Second Line: Project Name and Year
7. Third Line: Architect Firm Name and Architect's Project Number
8. Fourth Line: DSA or OSHPD Number (if applicable)
9. Fifth Line: Contractor Company Name
10. PDF files for Project "Record" Documents and Record Product Data shall be combined with PROJECT CLOSEOUT, Maintenance Data and Operations Data, and WARRANTIES on a single set of DVD's.

C. PROJECT "AS-BUILT" DOCUMENTS: Comply with the following:
1. Number of Copies: Submit one paper-copy set of marked-up as-built drawings and one paper-copy of marked-up as-built specifications.
2. Clearly Label each copy "PROJECT 'AS BUILT' DOCUMENTS" in two-inch-high printed letters.

D. PROJECT "RECORD" DOCUMENTS: Comply with the following:
1. Number of copies: Submit copies of the Record Documents as follows:
   a. Initial Submittal:
      1) Submit one paper-copy of marked-up record drawings and one paper copy of marked-up record specifications,
      2) Alternatively, submit PDF electronic files of scanned marked-up record drawings and marked-up record specifications on one set of DVD Üs
      3) Architect will indicate whether general scope of changes, additional information recorded, and quality of drafting are acceptable.
2. Final Submittal:
3. Submit one paper-copy of marked-up record drawings, one paper copy of marked-up record specifications, and PDF electronic files of scanned marked-up record drawings and marked-up record specifications on three sets of DVD's.
4. Each record drawing sheet shall be labeled, "PROJECT "RECORD" DOCUMENT.•
5. Print each drawing, whether or not changes and additional information were recorded.
6. Clearly Label each copy "PROJECT "RECORD" DOCUMENTS in two-inch-high printed letters in a prominent location.

E. RECORD PRODUCT DATA: Comply with the following:
1. Number of Copies:
   a. Submit one paper-copy set of marked-up shop drawings.
   b. Submit three DVD's of PDF electronic files of scanned marked-up shop drawings.

F. AGENCY DOCUMENTATION: Comply with the following:

1. Submit Documentation Required by the Agency Having Jurisdiction utilizing the format and system established by the Agency.

1.5 SYSTEM DESCRIPTION

A. The Architect considers the Project Record Documents to be of significant importance to the Owner.

B. Project Record Documents provide important information for the Owner's records, they form an invaluable record for future reference for concealed conditions, facilities management processes, and future additions and renovations.

PART 2 - PRODUCTS

2.1 General:

A. All costs (including the time) required for recording, transferring, and copying all documentation shall be part of the Contractor's Overhead Expense.

B. Provide red pencil or ink (contrasting color) for all marking of the PROJECT "AS-BUILT DOCUMENTS, PROJECT "RECORD" DOCUMENTS, and RECORD PROJECT DATA.

C. Do not permanently conceal any work until required information has been recorded.

2.2 RECORD DRAWINGS

A. PROJECT "AS-BUILT" DOCUMENTS: Maintain one set of marked-up paper copies of the Contract Drawings: and Specifications, incorporating new and revised drawings as modifications are issued.
   1. Preparation: Mark record prints to show the actual installation where installation varies from that shown originally. Require individual or entity who obtained record data, whether individual or entity is Installer, subcontractor, or similar entity, to provide information for preparation of corresponding marked-up record prints.
      a. Give particular attention to information on concealed elements that would be difficult to identify or measure and record later.
      b. Accurately record information in an acceptable drawing technique.
      c. Record data as soon as possible after obtaining it.
      d. Record and check the markup before enclosing concealed installations.
   2. Content: Types of items requiring marking include, but are not limited to, the following:
      a. Elevation for finish grade for all points indicated on Site Grading Plan.
      b. Depths of various elements of foundation in relation to first floor finish elevation.
      c. Horizontal and vertical location of underground utilities and appurtenances referenced to visible and accessible features of structure.
      d. Location of internal utilities and appurtenances concealed in construction referenced to visible and accessible features of structure.
      e. Revisions to routing of piping and conduits.
      f. Revisions to electrical circuitry.
      g. Actual equipment locations.

h. Duct size and routing.
i. Locations of concealed internal utilities Field changes of dimensions and details.
j. Changes made by Addenda, Change Orders and other Modification Documents.
k. Details not on original Contract Documents.
l. Changes made on Shop Drawings.

3. Mark Specifications to indicate the actual product installation where installation varies from that indicated in Specifications, addenda, and contract modifications.
   a. Give particular attention to information on concealed products and installations that cannot be readily identified and recorded later.
   b. Mark copy with the proprietary name and model number of products, materials, and equipment furnished, including substitutions and product options selected.
   c. Record the name of manufacturer, supplier, Installer, and other information necessary to provide a record of selections made.
   d. For each principal product, indicate whether record Product Data has been submitted in operation and maintenance manuals instead of submitted as record Product Data.
   e. Note related Changes Orders, record Product Data, and record Drawings where applicable.
4. Mark the Contract Drawings and Specifications completely and accurately. Use personnel proficient at recording graphic information in production of marked-up record prints.
5. Note Request for Information numbers, Supplemental Instruction numbers, Construction Change Directive numbers, Change Order numbers, and similar identification, where applicable.

2.3 PROJECT "RECORD" DOCUMENTS:

A. General: Transfer all changes, notations, etc. from the "AS-BUILT" PROJECT DOCUMENTS to the "PROJECT RECORD" DOCUMENTS in the same quality as the original Contract Documents.

2.4 RECORD PRODUCT DATA

A. Maintain one set of marked-up paper copies of the Shop Drawings and Product Data, incorporating any modifications to the reviewed documents.

B. Preparation: Mark Product Data to indicate the actual product installation where installation varies from that indicated in Product Data submittal.
   1. Give particular attention to information on concealed products and installations that cannot be readily identified and recorded later.
   2. Include significant changes in the product delivered to Project site and changes in manufacturer's written instructions for installation.
   3. Note related Change Orders and record Drawings where applicable.
   4. Include record Product Data directory organized by Specification Section number and title, electronically linked to each item of record Product Data.

2.5 AGENCY DOCUMENTATION

A. Contractor shall prepare and upload all applicable forms pertaining to the Contractor as required by the Division of State Architect DSA Procedure 13-02, including but not limited to:
   1. DSA 6-C - Contractor Verified Report
   2. NFPA System Record of Completion

PART 3 - EXECUTION

3.1 RECORDING AND MAINTENANCE:

A. Recording:
   1. Keep all documents current, PROJECT "AS-BUILT" DOCUMENTS shall be kept current at all times. Post changes and revisions to project as-built documents as they occur; do not wait until end of Project
   2. The Project Inspector will review the PROJECT "AS-BUILT" DOCUMENTS periodically for the Architect at the time Payment Requests are processed. Should the PROJECT "AS-BUILT DOCUMENTS not be current and up to date, the Owner reserves the right to hold the Payment Request until compliance with the Contract Documents has occurred.

B. Maintenance of Documents:
   1. Maintain at job site the following:
      a. Contract Drawings.
      b. Project Manual/Specifications.
      c. Addenda.
      d. Reviewed shop drawings.
      e. Change Orders.
      f. All Modification Documents.
      g. Field test records.
   2. Store documents in field office apart from documents used for construction.
   3. Provide files and racks for storage of documents.
   4. File documents in accordance with Project Filing Format or Uniform Construction Index.
   5. Maintain documents in clean, dry, legible condition.
   6. Do not use record documents for construction purposes.
   7. Make documents available at all times for inspection by Architect, Owner and Owner's Inspector.

END OF SECTION

INTENTIONALLY LEFT BLANK

SECTION 017900 - DEMONSTRATION AND TRAINING

PART 1 - GENERAL

1.1 RELATED DOCUMENTS

A. Drawings and general provisions of the Contract, including General and Supplementary Conditions and other Division 01 Specification Sections, apply to this Section.

1.2 SUMMARY

A. Section includes administrative and procedural requirements for instructing Owner's personnel, including the following:
   1. Instruction in operation and maintenance of systems, subsystems, and equipment.
   2. Demonstration and training video recordings.

B. Allowances: Furnish demonstration and training instruction time under the demonstration and training allowance as specified in Section - ALLOWANCES.

1.3 INFORMATIONAL SUBMITTALS

A. Instruction Program: Submit outline of instructional program for demonstration and training, including a list of training modules and a schedule of proposed dates, times, length of instruction time, and instructors' names for each training module. Include learning objective and outline for each training module.
   1. Indicate proposed training modules using manufacturer-produced demonstration and training video recordings for systems, equipment, and products in lieu of video recording of live instructional module.

B. Attendance Record: For each training module, submit list of participants and length of instruction time.

C. Evaluations: For each participant and for each training module, submit results and documentation of performance-based test.

1.4 CLOSEOUT SUBMITTALS

A. Demonstration and Training Video Recordings: Submit two copies within seven days of end of each training module.
   1. Identification: On each copy, provide an applied label with the following information:
      a. Name of Project.
      b. Name and address of videographer.
      c. Name of Architect.
      d. Name of Construction Manager.
      e. Name of Contractor.
      f. Date of video recording.

2. Transcript: Prepared and bound in format matching operation and maintenance manuals. Mark appropriate identification on front and spine of each binder. Include a cover sheet with same label information as the corresponding video recording. Include name of Project and date of video recording on each page.
3. Transcript: Prepared in PDF electronic format. Include a cover sheet with same label information as the corresponding video recording and a table of contents with links to corresponding training components. Include name of Project and date of video recording on each page.
4. At completion of training, submit complete training manual(s) for Owner's use prepared in same paper and PDF file format required for operation and maintenance manuals specified in Section OPERATION AND MAINTENANCE DATA.

1.5 QUALITY ASSURANCE

A. Facilitator Qualifications: A firm or individual experienced in training or educating maintenance personnel in a training program similar in content and extent to that indicated for this Project, and whose work has resulted in training or education with a record of successful learning performance.

B. Instructor Qualifications: A factory-authorized service representative, complying with requirements in Section PROJECT MANAGEMENT AND COORDINATION, experienced in operation and maintenance procedures and training.

C. Videographer Qualifications: A professional videographer who is experienced photographing demonstration and training events similar to those required.

D. Preinstruction Conference: Conduct conference at Project site to comply with requirements in Section PROJECT MANAGEMENT AND COORDINATION. Review methods and procedures related to demonstration and training including, but not limited to, the following:
1. Inspect and discuss locations and other facilities required for instruction.
2. Review and finalize instruction schedule and verify availability of educational materials, instructors' personnel, audiovisual equipment, and facilities needed to avoid delays.
3. Review required content of instruction.
4. For instruction that must occur outside, review weather and forecasted weather conditions and procedures to follow if conditions are unfavorable.

1.6 COORDINATION

A. Coordinate instruction schedule with Owner's operations. Adjust schedule as required to minimize disrupting Owner's operations and to ensure availability of Owner's personnel.

B. Coordinate instructors, including providing notification of dates, times, length of instruction time, and course content.

C. Coordinate content of training modules with content of approved emergency, operation, and maintenance manuals. Do not submit instruction program until operation and maintenance data have been reviewed and approved by Architect.

1.7 INSTRUCTION PROGRAM

A. Program Structure: Develop an instruction program that includes individual training modules for each system and for equipment not part of a system, as required by individual Specification Sections.

B. Training Modules: Develop a learning objective and teaching outline for each module. Include a description of specific skills and knowledge that participant is expected to master. For each module, include instruction for the following as applicable to the system, equipment, or component:

1. Basis of System Design, Operational Requirements, and Criteria: Include the following:
   a. System, subsystem, and equipment descriptions.
   b. Performance and design criteria if Contractor is delegated design responsibility.
   c. Operating standards.
   d. Regulatory requirements.
   e. Equipment function.
   f. Operating characteristics.
   g. Limiting conditions.
   h. Performance curves.
2. Documentation: Review the following items in detail:
   a. Emergency manuals.
   b. Systems and equipment operation manuals.
   c. Systems and equipment maintenance manuals.
   d. Product maintenance manuals.
   e. Project Record Documents.
   f. Identification systems.
   g. Warranties and bonds.
   h. Maintenance service agreements and similar continuing commitments.
3. Emergencies: Include the following, as applicable:
   a. Instructions on meaning of warnings, trouble indications, and error messages.
   b. Instructions on stopping.
   c. Shutdown instructions for each type of emergency.
   d. Operating instructions for conditions outside of normal operating limits.
   e. Sequences for electric or electronic systems.
   f. Special operating instructions and procedures.
4. Operations: Include the following, as applicable:
   a. Startup procedures.
   b. Equipment or system break-in procedures.
   c. Routine and normal operating instructions.
   d. Regulation and control procedures.
   e. Control sequences.
   f. Safety procedures.
   g. Instructions on stopping.
   h. Normal shutdown instructions.
   i. Operating procedures for emergencies.
   j. Operating procedures for system, subsystem, or equipment failure.
   k. Seasonal and weekend operating instructions.
   l. Required sequences for electric or electronic systems.
   m. Special operating instructions and procedures.

5. Adjustments: Include the following:
   a. Alignments.
   b. Checking adjustments.
   c. Noise and vibration adjustments.
   d. Economy and efficiency adjustments.
6. Troubleshooting: Include the following:
   a. Diagnostic instructions.
   b. Test and inspection procedures.
7. Maintenance: Include the following:
   a. Inspection procedures.
   b. Types of cleaning agents to be used and methods of cleaning.
   c. List of cleaning agents and methods of cleaning detrimental to product.
   d. Procedures for routine cleaning.
   e. Procedures for preventive maintenance.
   f. Procedures for routine maintenance.
   g. Instruction on use of special tools.
8. Repairs: Include the following:
   a. Diagnosis instructions.
   b. Repair instructions.
   c. Disassembly; component removal, repair, and replacement; and reassembly instructions.
   d. Instructions for identifying parts and components.
   e. Review of spare parts needed for operation and maintenance.

1.8 PREPARATION

A. Assemble educational materials necessary for instruction, including documentation and training module. Assemble training modules into a training manual organized in coordination with requirements in Section 017823 "Operation and Maintenance Data."

B. Set up instructional equipment at instruction location.

1.9 INSTRUCTION

A. Facilitator: Engage a qualified facilitator to prepare instruction program and training modules, to coordinate instructors, and to coordinate between Contractor and Owner for number of participants, instruction times, and location.

B. Engage qualified instructors to instruct Owner's personnel to adjust, operate, and maintain systems, subsystems, and equipment not part of a system.
   1. Architect will furnish an instructor to describe basis of system design, operational requirements, criteria, and regulatory requirements.
   2. Owner will furnish an instructor to describe Owner's operational philosophy.
   3. Owner will furnish Contractor with names and positions of participants.

C. Scheduling: Provide instruction at mutually agreed-on times. For equipment that requires seasonal operation, provide similar instruction at start of each season.
   1. Schedule training with Owner, through Architect,with at least seven days' advance notice.

D. Training Location and Reference Material: Conduct training on-site in the completed and fully operational facility using the actual equipment in-place. Conduct training using final operation and maintenance data submittals.

E. Evaluation: At conclusion of each training module, assess and document each participant's mastery of module by use of a demonstration performance-based test.

F. Cleanup: Collect used and leftover educational materials and remove from Project site. Remove instructional equipment. Restore systems and equipment to condition existing before initial training use.

1.10 DEMONSTRATION AND TRAINING VIDEO RECORDINGS

A. General: Engage a qualified commercial videographer to record demonstration and training video recordings. Record each training module separately. Include classroom instructions and demonstrations, board diagrams, and other visual aids, but not student practice.
   1. At beginning of each training module, record each chart containing learning objective and lesson outline.

B. Digital Video Recordings: Provide high-resolution, digital video in MPEG format, produced by a digital camera with minimum sensor resolution of 12 megapixels and capable of recording in full HD modewith vibration reduction technology.
   1. Submit video recordings on CD-ROM or thumb drive.
   2. File Hierarchy: Organize folder structure and file locations according to Project Manual table of contents. Provide complete screen-based menu.
   3. File Names: Utilize file names based on name of equipment generally described in video segment, as identified in Project specifications.
   4. Contractor and Installer Contact File: Using appropriate software, create a file for inclusion on the equipment demonstration and training recording that describes the following for each Contractor involved on the Project, arranged according to Project Manual table of contents:
      a. Name of Contractor/Installer.
      b. Business address.
      c. Business phone number.
      d. Point of contact.
      e. Email address.

C. Recording: Mount camera on tripod before starting recording, unless otherwise necessary to adequately cover area of demonstration and training. Display continuous running time.
   1. Film training session(s) in segments not to exceed 15 minutes.
      a. Produce segments to present a single significant piece of equipment per segment.
      b. Organize segments with multiple pieces of equipment to follow order of Project Manual table of contents.
      c. Where a training session on a particular piece of equipment exceeds 15 minutes, stop filming and pause training session. Begin training session again upon commencement of new filming segment.

D. Light Levels: Verify light levels are adequate to properly light equipment. Verify equipment markings are clearly visible prior to recording.

1. Furnish additional portable lighting as required.

E. Narration: Describe scenes on video recording by audio narration by lavalier microphone while or dubbing audio narration off-site after video recording is recorded. Include description of items being viewed.

F. Transcript: Provide a transcript of the narration. Display images and running time captured from videotape opposite the corresponding narration segment.

G. Preproduced Video Recordings: Provide video recordings used as a component of training modules in same format as recordings of live training.

PART 2 - PRODUCTS

PART 3 - EXECUTION

END OF SECTION

SECTION 024302 – PORTABLE BUILDING RELOCATION

PART 1 - GENERAL

1.1 SUMMARY

A. This Section includes the following:
   1. Provide all material, labor, equipment, moving permits, and services necessary to completely relocate Existing Portable Building(s) to a new designated site, along with all other related items necessary to complete the Project as indicated by the Contract Documents.
      a. Owner will provide existing Proof of Ownership upon request.
      b. Building Mover (hereinafter known as the Contractor) shall provide costs for obtaining all AHJ Moving Permits over Public Roads.
      c. Contractor shall prepare the Existing Building at its existing location for transportation over Public Roads to the Building new location.
         1) Disconnect all utilities in such a way as they can be re-established at the new location without major re-wiring.
         2) Remove all external Metal Ramps and carefully prepare them for relocation to the new site for re-use.
         3) Structurally reinforce the existing building to make it suitable for transportation over Public Roads in compliance with all applicable AHJ Requirements.
         4) Secure all interior items during the transportation of the Building to its new site so that they are in good working order when re-established in the new location.
      d. Contractor shall properly prepare the existing Building at its new location for set-up and operation.
         1) Place building on new foundation materials per original DSA approval.
         2) Re-connect all utilities to the new site Utility Infrastructure. Test all connections as to utility use so that everything is in proper order.
         3) Remove all temporary shoring or reinforcement during the move.
         4) Repair all damage to the Existing Building during the moving operation, and join all the parts for a fully functioning Building at its new location.
         5) Skirting:
            a) Attach new skirting as directed by the Contract Documents prior to the placement of the Metal Ramps.
         6) Set the existing Building at the proper floor height in the Building's new location to comply with current ADA and State Compliance requirements.
            a) Modify and re-use the existing Metal Ramps as required so that they comply with current ADA and State Compliance requirements.

B. Related Sections: The following Project Manual Sections contain requirements that relate to this section:
   1. ALL DIVISION 00 SPECIFICATION SECTIONS.
   2. ALL DIVISION 01 SPECIFICATION SECTIONS.
   3. 02 41 19 SELECTIVE DEMOLITION
   4. ALL SPECIFICATION SECTIONS IN THE FACILITY SERVICES SUBGROUP.

5. ALL SPECIFICATION SECTIONS IN THE SITE AND INFRASTRUCTURE SUBGROUP.

1.2 SUBMITTALS

A. Submit in accordance with Specification Section - SUBMITTAL PROCEDURES:
1. Quality Assurance/Control Submittals:
a. Photo Documentation:
1) Provide Date and Time Stamped Photo Documentation with notations prior to starting any work.
b. Certificates:
1) Submit three (3) copies of certificates.
a) Provide copies of all Transportation Permits for moving a structure across Public Roads.

1.3 QUALITY ASSURANCE

A. Qualifications:
1. Contractor Qualifications:
a. Engage an experienced Contractor who has successfully completed three (3) projects of similar scope and size to that indicated for this Project.
b. Has demonstrated that they are aware of all Transportation Permitting for the movement of Buildings across Public Roads.

B. Regulatory Requirements:
1. In accordance with Specification Section - REGULATORY REQUIREMENTS, and the following:
a. CARB Materials and equipment used for this Project shall comply with the current applicable regulations of the California Air Resources Board (CARB) and the Environmental Protection Agency (EPA), in the area where the Project is located.

C. Meetings:
1. Pre-Construction: Schedule prior to the start of work.
a. Coordinate the work with other work being performed.
b. Provide a thorough review of the existing Building by way of the Photo Documentation and notations, prior to any work on the Project.
c. Identify any potential problems, which may impede planned progress of work regarding quality of the re-location of the Building Structure from its existing site to its new location.
2. Progress: Scheduled by the Contractor during the performance of the work.
a. Review for proper work progress.
b. Identify any installation problems and acceptable corrective measures.
c. Identify any measures to maintain or regain project schedule if necessary.
3. Completion: Scheduled by the Contractor upon proper completion of the work.
a. Maintaining installed work until the Notice of Substantial Completion has been executed.

1.4 DELIVERY, STORAGE, AND HANDLING

A. Packing, shipping, handling, and unloading:
   1. Items that are not attached to the Building (but required in the Building at its new location) shall be packed and handled in such a manner as to assure that they are free from dents, scratches and other damage.
   2. Prepare the existing Building for transportation, splitting it into sections if required, to meet transportation requirements across Public Roads, and reinforcing the structure in such a way as to handle moving the Building the distance required for this Project.
   3. Protect the Building from debris and wind during the movement of the building from the existing site to the new site for this Project.

B. Acceptance at Site:
   1. Items that are not attached to the Building must be in Contractor's containers identifying the item and location in the Building.
   2. Damaged products will not be accepted.

C. Storage and protection:
   1. Items that are not fixed to the Building shall be stored above ground on level platforms, six (6) inches above ground, allowing air circulation under stacked units, until they can be moved into the Building where they came from.
      a. Cover materials with protective waterproof covering providing for adequate air circulation and ventilation.

1.5 PROJECT CONDITIONS OR SITE CONDITIONS

A. Environmental requirements:
   1. Dust control: Perform work in a manner as to minimize the spread of dust and flying particles.
   2. Burning: No burning will be allowed on-site.
   3. Rain: The work under this section shall not be started or maintained under threat of rain unless the work is not affected by the rain.

B. Existing Conditions:
   1. Examine existing and new site and compare it with the drawings and specifications. Thoroughly investigate and verify conditions under which the work is to be performed. No allowance will be made for extra work resulting from negligence or failure to be acquainted with all available information concerning conditions necessary to estimate the difficulty or cost of the work.
   2. Conduct work so as not to interfere unnecessarily with adjacent roads, streets, drives and walks.

PART 2 - PRODUCTS
NOT APPLICABLE

PART 3 - EXECUTION

3.1 EXAMINATION

A. Site verification of conditions:
   1. Prior to the execution of the work under this specification section, inspect the existing site and new site regarding the work executed under other sections of this Project Manual which, affect the execution of work under this specification section.
      a. Take pictures, dated and time stamped, of the exterior and the interior and provide copies to the Owner prior to doing any work.
      b. Verify all utility connections, Telephone, PA, FA systems, and any Data Infrastructure is in good operating order prior to any Utility disconnect is made before the moving of the structure.
         1) Provide notation of any issues regarding the utilities on the Photo Documentation.
   2. Report unacceptable conditions to the Architect. Do not begin work until unacceptable conditions have been corrected.
      a. Utilize the pictures taken to note any conditions present that need repairing due to existing conditions and not due to transportation issues prior to doing any work.
   3. Execution of work under this specification section shall constitute acceptance of existing conditions.

3.2 PREPARATION

A. Coordination:
   1. Coordinate work under this specification section with work specified under other sections to ensure proper and adequate interface of work at the existing site and the new site.

B. Protection:
   1. Protect all adjacent areas and surfaces at the existing site and the new site from drips, spray, air pollution of surrounding environment, and other damage from work under this specification section.
   2. Take all necessary measures to ensure that there is no damage to the Owner's grounds and sod areas, caused by the movement of the portable building(s), transportation of the Building(s), and the Contractor's equipment.
      a. This applies on all sites, both existing and new locations for the Building(s).
   3. Contractor shall, repair at its own cost, all damage to Telephone, PA, FA, and Data systems not part of the scope of this work, resulting from work done under this contract.

C. Surface preparation:
   1. Prepare existing site in accordance with Contract Documents, for the proper preparation of the Building for moving and transportation to the new site location.
      a. Provide temporary barricades as required during the preparation of the Building for moving for keeping unauthorized traffic from the existing site.
         1) Maintain until all work at the existing site is ready for the Owner to re-occupy.
         2) Remove all temporary barricades at the conclusion of all work.

b. Make the Building ready for transportation:
   1) Remove all Metal Ramps as required for re-use at the new site.
   2) Remove all skirting.
      a) Remove from site, and legally dispose of the remains.
   3) Provide temporary jacks until the Building is ready for transport, remove all foundation skids, and legally dispose of the remains.

2. Prepare new site in accordance with Contract Documents.
   a. Verify that all underground sprinklers have been re-routed at the new site location so as not to impede the erection and set-up of the Building.
   b. Verify that all earthwork, pavement, and concrete work, have been properly prepared for the setting of the Building in its new location.
      1) Notify the Architect if site is not ready.
   c. Verify that all utility infrastructures have been prepared for servicing the Building at its new location, and is ready for hook-up.
   d. Provide temporary barricades at the new site during the set-up of the Building for keeping unauthorized traffic from the new site until it is ready for turn over to the Owner for its use.
   e. Provide new foundation supports and level at the new site.
   f. Provide new foundation supports for the skirting.
   g. Clean existing Building substrates once the Building has been re-located at the new site of substances (oil, grease, rolling compounds, incompatible primers, loose mill scale, etc.) which could impair bond of paint materials that may be required in other sections.

3.3 ERECTION

A. General:
   1. Once the Building is at the new site, set-up the Building into its new location in accordance with the Contract Documents.
   2. In accordance with Regulatory Requirements and the Contract Documents.
   3. Set plumb, level, and square. Comply with all ADA and State Accessibility Requirements.

B. Layout:
   1. Lines shall be straight and true.

3.4 REPAIR / RESTORATION

A. Repair the Building in its new location:
   1. Repair all exterior materials damaged during the move, and make weather tight and ready for re-painting, including, but not limited to, the following:
      a. Repair all gutters and downspouts.
      b. Repair any glass and screens.
      c. Repair any doors or weatherstripping.
      d. Repair any trim or flashing.
      e. Repair any Mechanical and Electrical items.
   2. Repair all interior materials damaged during the move.

B. Restore the Building in its new location:

1. Re-seal all exterior joints, interior joints, and cracks where adjoin materials meet as required and make ready for new paint.
2. Re-paint all exterior materials and make ready for new occupancy.

3.5 RE-INSTALLATION

A. General:
1. Once the Building is at the new site, install all items not attached into the Building at its new location in accordance with the Contract Documents.
2. In accordance with Regulatory Requirements and the Contract Documents.
3. Set plumb, level, and square. Comply with all ADA and State Accessibility Requirements.

B. Layout:
1. Lines shall be straight and true.

3.6 FIELD QUALITY CONTROL

A. Site Tests:
1. As required by Regulatory Requirements.

B. Inspection:
1. As required by Regulatory Requirements.
2. Schedule inspections and notify the Architect, Project Inspector and any other regulatory agencies of the time at least 48 hours prior to the inspection.
3. No work shall be without the inspections required by Regulatory Requirements.

3.7 ADJUSTING

A. Test and adjust controls and safeties. Replace damaged or malfunctioning controls and equipment.

3.8 CLEANING

A. Clean in accordance with Specification Section – PROJECT CLOSEOUT.
1. Leave area level and free of any ruts or debris. Appearance of earth surface shall be equal to or better than adjacent undisturbed surfaces.
2. Clean any soiled surfaces immediately.
   a. Clean all Interior surfaces once the Building is set in its new location and ready for occupancy.
3. Remove any protruding fasteners and patch areas affected.
4. Finish shall be clean and ready for the application of any additional finishes as indicated by the Contract Documents.

END OF SECTION

SECTION 024919 - SELECTIVE DEMOLITION

PART 1 - GENERAL

1.1 SUMMARY

A. This section includes the following:
   1. Section includes requirements governing execution of the work including, but not limited to, the following:
      a. Demolition and removal of selected portions of building or structure.
      b. Demolition and removal of selected site elements.
      c. Salvage of existing items to be reused or recycled.
      d. Demolition of entire small buildings or structures.

B. Related Sections: The following Project Manual Sections contain requirements that relate to this section:
   1. ALL DIVISION 00 SPECIFICATION SECTIONS
   2. ALL DIVISION 01 SPECIFICATION SECTIONS
   3. ALL SPECIFICATION SECTIONS IN THE FACILITY SERVICES SUBGROUP

1.2 REFERENCES

A. Standards:

B. In accordance with the latest edition of the following standards:
   1. ANSI A10.6 American National Standards Institute

1.3 DEFINITIONS

A. Remove: Detach items from existing site or building(s) and legally dispose or recycle off-site.

B. Remove and Salvage to Owner: Carefully detach from existing site or building(s), in a manner to prevent damage, and deliver to Owner.

C. Remove and Reinstall: Detach items from existing site or building(s), prepare for reuse, and reinstall where indicated.

D. Existing to Remain: Existing item(s) within project site that are not to be permanently removed and that are not otherwise indicated to be removed, removed and salvaged, or removed and reinstalled.

1.4 SUBMITTALS

A. Submit in accordance with Specification Section - SUBMITTAL PROCEDURES:
   1. Shop Drawings:

a. Proposed Protection Measures - Submit report and drawings that indicates the measures proposed for protecting individuals and property for dust and noise control.
   1) Indicate proposed locations and construction of barriers.
   2) Indicate occupant paths of egress and travel.
   3) Indicate how long utility services will be interrupted.
b. Salvaged Item Inventory List
   1) Indicate items to be salvaged and delivered to Owner.

2. Closeout Submittals:
   a. Existing Warranties
   b. Pre-demolition Photographs

1.5 QUALITY ASSURANCE

A. Regulatory Requirements:
1. In accordance with Specification Section - REGULATORY REQUIREMENTS and the following:
   a. CARB Materials and equipment used for this project shall comply with the current applicable regulations of the California Air Resources Board and the Environmental Protection Agency (EPA), in the area where the project is located.
   b. CAL/OSHA California Division of Occupational Safety and Health Administration.
   c. CF County of Fresno, codes and ordinances
   d. EPA Environmental Protection Agency

B. Meetings:
1. Pre- Demolition……Schedule prior to the start of work.
   a. Coordinate the work with other work being performed.
   b. Review requirements of work performed by others that rely on substrates exposed by selective demolition work.
   c. Identify any potential problems, which may impede planned progress and proper demolition of work.
   d. Review structural load limitations of existing structure.
   e. Review areas where existing construction is to remain and requires protection.
   f. Review demolition waste disposal and material recycling procedures.
2. Progress:……Scheduled by the Contactor during the performance of the work.
   a. Review for proper work progress.
   b. Identify any problems and acceptable corrective measures.
   c. Identify any measures to maintain or regain project schedule if necessary.
3. Completion:……Scheduled by the Contactor upon proper completion of the work.
   a. Inspect and identify any problems.
   b. Establish method and procedures to maintain protections while progressing to project completion.

1.6 DELIVERY, STORAGE, AND HANDLING

A. Cleaning, handling, and packing:
1. Salvaged Items and Reinstalled Items shall be handled in such a manner as to assure that they are free from damage.
2. Salvaged Items shall be cleaned and packed or cleaned and palleted.

3. Reinstalled Items shall be cleaned.

B. Storage and protection
1. Salvaged Items and Reinstalled Items shall be stored in a dry, protected area.
2. Salvaged Items and Reinstalled Items shall be stored above ground on level platforms, six (6) inches above ground, allowing air circulation underneath.
3. Cover with protective waterproof covering providing for adequate air circulation and ventilation.

C. Waste Management and Disposal:
1. Disposal of all selective demolition items shall be per Specification Section - CONSTRUCTION WASTE MANAGEMENT AND DISPOSAL.

1.7 PROJECT CONDITIONS

A. Environmental requirements:
1. Dust control - perform site, exterior, and interior work in a manner as to minimize the spread of dust and flying particles.
   a. Thoroughly moisten appropriate surfaces as required to prevent dust from being a nuisance to the occupants, public, and neighbors.
2. Noise control - perform work in a manner as to minimize construction noise.
   a. When a certain level of noise is unavoidable and is objectionable to the occupants of the adjacent spaces, buildings, or premises, coordinate with Owner and make arrangements to perform such work at the most appropriate time periods of the day.
3. Infection control -
4. Vibration control -

B. Existing conditions:
1. Examine project site and building(s) and compare it with the drawings and specifications. Thoroughly investigate and verify conditions under which the work is to be performed. No allowance will be made for extra work resulting from negligence or failure to be acquainted with all available information concerning conditions necessary to estimate the difficulty or cost of the work.
2. Conduct work so as not to interfere unnecessarily with adjacent buildings, roads, streets, drives, and walks.
   a. Do not close or obstruct streets, alleys, walks, or passageways without permission from authorities having jurisdiction and coordinating same with immediate neighbors whose business operation may be affected.
   b. Safety measures shall be taken to insure an uninterrupted flow of traffic around the site as required by local Police and Fire Departments
3. Owner will occupy portions of building immediately adjacent to selective demolition area. Conduct selective demolition so Owner's operations will not be disrupted.
4. Maintain existing utilities indicated to remain in service and protect against damage during selective demolition work.
   a. Maintain fire-protection facilities in service during the work.
5. Demolition waste becomes the property of the Contractor.
6. Storage or sale of removed items on-site is not permitted.
7. It is not expected that hazardous materials will be encountered in the Work.
   a. Hazardous materials will be removed by Owner before start of the Work.
   b. If suspected hazardous materials are encountered, do not disturb; immediately notify Architect and Owner.

8. Hazardous materials are present in buildings and structures to be selectively demolished. The Owner has prepared a report for the Contractor to review and use.
    a. Hazardous material remediation is specified in section HAZARDOUS MATERIAL PROCEDURES.

1.8 WARRANTY

A. Existing Warranties:
1. Remove, replace, patch, and repair materials and surfaces cut or damaged during selective demolition, by methods and with materials so as not to void existing warranties. Notify warrantor before proceeding. Existing warranties include the following:
    a. Roofing system
2. Notify warrantor on completion of selective demolition, and obtain documentation verifying that existing system has been inspected and warranty remains in effect.

PART 2 - PRODUCTS

2.1 MATERIALS

A. Furnish all materials, tools, equipment, facilities, and services as required for performing the selective demolition and removal work.

PART 3 - EXECUTION

3.1 EXAMINATION

A. Verification of conditions:
1. Report unacceptable conditions to the Architect. Do not begin work until unacceptable conditions have been corrected.
2. Execution of work under this specification section shall constitute acceptance of existing conditions.
3. Obtain all necessary permits and authorizations by regulatory agencies required to perform the Work under this Section.
4. Verify that utilities have been disconnected and capped before starting selective demolition operations.
5. Verify that rooftop utilities and service piping have been shut-off prior to roof selective demolition.
6. Record existing conditions by use of Pre-demolition Photographs.
    a. Inventory and record the condition of items to be salvaged and/or re-installed.

3.2 PREPARATION

A. Coordination:
1. Before proceeding, verify plans match existing conditions.
2. Review documents of existing construction provided by Owner against existing conditions.

3. If conflicts are encountered, report it to the Architect. Then prepare recommendation(s) for correction and submit to Architect for review.
4. Coordinate work under this specification section with work specified under other sections.
5. Coordinate any utility and HVAC unit shut-down with owner 48 hours in advance of the anticipated shut-down.
   a. Do not interrupt utilities and HVAC units serving occupied or used facilities, except when authorized in writing by the Owner.
   b. Provide temporary service during interruptions to existing facilities, as may be required by the Owner to maintain essential services.
6. Prior to site selective demolition, review status of trees and shrubs with Architect and Owner. The Owner may wish to relocate trees or shrubs outside the limits of construction.
7. Prior to roofing selective demolition, coordinate with Owner to shut down air intake equipment and service piping in the vicinity of work.

B. Protection:
1. Structure and Property:
   a. Provide temporary barricades and other protection required to prevent injury to people and damage to adjacent buildings, landscape, and facilities to remain.
   b. All damage inflicted on public and private property and the property of the Owner shall be repaired or restored to the original condition prior to the start of this Work. All repair or replacement work shall be done at no additional cost to the owner.
   c. Provide protection to ensure safe passage of people around selective demolition area and to and from occupied portions of building and site.
   d. Provide temporary weather protection, during interval between selective demolition of existing construction on exterior surfaces and new construction, to prevent water leakage and other weather damage to building envelope, structure, and interior areas.
   e. Protect walls, ceilings, floors, and other existing finish work that are to remain or that are exposed during selective demolition operations.
   f. Protect and maintain utility services and mechanical/electrical systems to remain.
   g. Cover and protect furniture, furnishings, and equipment that have not been removed.
   h. Cover all air supply and return ducts to remain before proceeding with demolition work.
   i. Cover air intake louvers before proceeding with work that will affect indoor air quality.
   j. During roof selective demolition have sufficient and suitable materials on-site to facilitate rapid installation of temporary protection in the event of unexpected rain.
2. Temporary Shoring:
   a. Provide and maintain shoring, bracing, and structural supports as required to preserve stability and prevent movement, settlement, or collapse of construction and finishes to remain, and to prevent unexpected or uncontrolled movement or collapse of construction being demolished.
      1) Strengthen or add new supports when required during progress of selective demolition.

3.3 APPLICATION

A. General:

1. Selective demolition shall include the removal of all components of the existing building and/or site described in the documents to be removed. Unless otherwise specified, the component identified for removal shall include all materials, accessories and fabrications associated with that component.
2. Neatly cut openings and holes plumb, square, and true to dimensions required. Use cutting methods least likely to damage construction to remain or adjoining construction.
   a. Temporarily cover opening to remain.
   b. Use hand tools or small power tools designed for sawing or grinding, not hammering and chopping, to minimize disturbance of adjacent surfaces.
3. Cut or drill from the exposed or finished side into concealed surfaces to avoid marring existing finished surfaces.
4. When removing structural framing members, lower to ground by method suitable to avoid free fall and to prevent ground impact or dust generation.
5. Locate selective demolition equipment and demolished debris so as not to impose excessive loads on supporting walls, floors, or framing.
6. Locate, identify, disconnect, and seal or cap off indicated utility services and mechanical/electrical systems.
7. Demolished items and materials that are recyclable or slated for disposal shall be promptly dealt with per Specification Section - CONSTRUCTION WASTE MANAGEMENT AND DISPOSAL.
8. Removed and Salvaged items:
   a. Clean salvaged items.
   b. Pack or crate items after cleaning. Identify contents of containers.
   c. Store items in a secure area until delivery to Owner.
   d. Transport item to Owner's storage area [on-site][off-site][list address].
   e. Protect items from damage during transport and storage.
   f. In addition to items indicated elsewhere, salvaged items that the Owner wants to retain in usable condition are as follows:
      1) All door hardware
      2) All unit heater and controls
      3) All energy management controls
      4) All security system devices
9. Removed and Reinstalled items:
   a. Clean and repair items to functional condition adequate for intended reuse.
   b. Pack or crate items after cleaning and repairing. Identify contents of containers.
   c. Protect items from damage during transport and storage.
   d. Reinstall items in locations indicated. Comply with installation requirements for new materials and equipment. Provide connections, supports, and miscellaneous materials necessary to make item functional for use indicated.
10. Existing Items to Remain:
    a. Protect construction indicated to remain against damage and soiling during selective demolition.

B. Site Selective Demolition:
1. Utility lines to be abandoned within the construction area shall be removed and stubbed off outside the limits of construction.
2. Maintain existing storm drainage system to remain in functioning condition. Prevent debris form entering or blocking drains and piping. Use drain plugs specifically for this purpose. Remove drain plugs at the end of each work day.
3. Refer to drawings for trees and shrubs to be removed. Protect certain trees as indicated.
   a. Remove tops, trunks, and roots of trees and shrubs to a minimum depth of 3 feet or to a depth required to remove all roots 1/4 inch diameter and larger.

b. Chip removed trees, shrubs, and roots.
   1) Removed chipped material to recycling station.
   2) Recycle chipped material into mulch for this project. Refer to Specification Section - LANDSCAPE PLANTING for treatment.
4. Remove debris, concrete, asphalt, and any other obstruction to the extent indicated.
5. Remove all:
   a. Buried objects which will interfere with the Work.
   b. Irrigation lines, irrigation risers, and irrigation valves.
   c. Stand pipes.
   d. Water wells and pumps.
   e. Electrical service and power poles.
6. At building pads, site improvements, or trenching, strip topsoil which contains:
   a. Grass, weeds, and natural vegetation to a minimum depth of [12] inches.
   b. Stumps and roots 1/4 inch and larger.
7. Remove non-soil materials from topsoil, including clay lumps, gravel, trash, debris, weeds, roots, other waste materials, and objects more than 1/2 inch in diameter.
8. Stockpile reusable topsoil away from excavation and where work is to proceed.
   a. Do not stockpile topsoil within drip line of remaining trees.
9. Non-soil materials removed from topsoil shall be separated into like materials and recycled either within the project or removed from the project site to a recycling station.
   a. Those waste materials that are non-recyclable shall be legally disposed off of the project site.

C. Roofing Selective Demolition:
1. Maintain roof drains in functioning condition to ensure roof drainage at end of each work day. Prevent debris from entering or blocking roof drains and conductors. Use roof drain plugs specifically for this purpose. Remove roof drain plugs at end of each work day, when no work is taking place, or when rain is forecast.
2. Remove existing roofing membrane and other roofing system membrane components down to the deck including flashings, copings, and roof accessories.
   a. Bitumen and felts that are firmly bonded to concrete decks are permitted to remain if felts are dry. Remove un-adhered bitumen and felts.

3.4 CLEANING

A. Clean in accordance with Specification Section - PROJECT CLOSEOUT:
1. Clean any soiled surfaces to remain immediately.
2. Existing substrates shall be clean and ready for the installation of any additional materials.
3. Leave site areas level and free of any ruts or debris. Appearance of earth surface shall be equal to or better than adjacent undisturbed surfaces.

END OF SECTION

INTENTIONALLY LEFT BLANK

SECTION 031101 – CONCRETE FORMWORK

PART 1 - GENERAL

1.1 SUMMARY

A. This Section includes the following:
   1. Provide all material, labor, equipment and services necessary to completely install all Concrete Formwork materials, and other related items necessary to complete the Project as indicated by the Contract Documents.

B. Related Sections: The following Project Manual Sections contain requirements that relate to this section:
   1. ALL DIVISION 00 SPECIFICATION SECTIONS.
   2. ALL DIVISION 01 SPECIFICATION SECTIONS.
   3. 03 15 14 DRILLED ANCHORS
   4. 03 20 00 REINFORCEMENT
   5. 03 30 00 CAST-IN-PLACE CONCRETE
   6. 03 35 00 POLISHED CONCRETE FINISHING
   7. 04 22 00 CONCRETE MASONRY UNITS
   8. 05 12 00 STEEL AND FABRICATIONS
   9. 06 10 00 ROUGH CARPENTRY
   10. 07 40 00 METAL PANELS
   11. 07 92 00 SEALANTS
   12. 10 75 00 FLAGPOLES
   13. ALL SPECIFICATION SECTIONS IN THE FACILITY SERVICES SUBGROUP.
   14. ALL SPECIFICATION SECTIONS IN THE SITE AND INFRASTRUCTURE SUBGROUP.

1.2 REFERENCES

A. Standards:
   1. In accordance with the latest edition of the following standards:
      a. ACI American Concrete Institute
      b. APA The Engineered Wood Association (formerly the American Plywood Association)
      c. PS Product Standards of the U.S. Department of Commerce, latest edition
      d. WCLIB West Coast Lumber Inspection Bureau

1.3 DEFINITIONS

A. Terms used throughout this section.
   1. Unexposed:
      a. "Unexposed to View" for determining what forms to use for an unfinished concrete surface.
   2. Exposed:

a. "Exposed to View" for determining what forms to use for a finished concrete surface.

1.4 SUBMITTALS

A. Submit in accordance with Specification Section - SUBMITTAL PROCEDURES:
1. Product Data.
a. Forming materials.
b. Tie rods and spreaders.
c. Formwork for exposed concrete.
d. Form coatings and release agents.
2. Quality Assurance/Control Submittals:
a. Manufacturer's written Instructions:
1) Instructions for specific form liner manufacturer indicated.
3. Closeout Submittals:
a. Record Documents in accordance with Specification Section – PROJECT DOCUMENTS.

1.5 QUALITY ASSURANCE

A. Qualifications:
1. Installer Qualifications:
a. Engage an experienced Installer who has successfully completed three (3) projects of similar scope and size to that indicated for this Project.
2. Manufacturer/Supplier Qualifications:
a. Firm experienced in successfully producing/supplying products similar to that indicated for this Project, with sufficient production/supply capacity to produce/supply required units without causing delay in the Work.

B. Regulatory Requirements:
1. In accordance with Specification Section - REGULATORY REQUIREMENTS, and the following:
a. CARB Materials and equipment used for this Project shall comply with the current applicable regulations of the California Air Resources Board (CARB)and the Environmental Protection Agency (EPA), in the area where the project is located.

C. Mockups:
1. Cast in accordance with Specification Section – CAST-IN-PLACE CONCRETE, Part 1 Article titled "SUBMITTALS", paragraph titled "Mockups" for requirements.
a. Provide with all applicable joints, grooves, textures, etc.

1.6 WARRANTY

A. Contractor's General Warranty:
1. In accordance with Specification Section - WARRANTIES.

B. Manufacturer's Warranty:
1. In accordance with manufacturer's written standard warranty:

a. Warranty Period One (1) Year.

C. Installer's Warranty:
1. In accordance with the terms of the Specification Section - WARRANTIES.
a. Warranty Period One (1) Year.

PART 2 - PRODUCTS

2.1 MANUFACTURERS

A. These products listed herein establish the size, pattern, color range and function selected by the Architect for this Project. Manufacturers that are listed as acceptable alternative manufacturers and substitutions must still comply with the requirements of this project and the products listed in order to be approved as an equivalent during the Submittal Process. If the acceptable alternative manufacturers listed or substitutions are not approved during the Submittal Process due to non-compliance with the contract documents, then the Contractor shall submit product specified.
1. Specified product manufacturer:
a. MDO Plywood SIMPSON TIMBER PRODUCTS.
b. HDO Plywood SIMPSON TIMBER PRODUCTS.
2. Specified product accessories:
a. Chamfer Strips MEADOW / BURKE COMPANY.
b. Cement Compound Plugs MEADOW / BURKE COMPANY.
c. Double Sided Foam Tape 3M COMPANY.
d. Rustication Strips MEADOW / BURKE COMPANY.
e. Spreaders and Ties MEADOW / BURKE COMPANY.

B. Products from other manufacturers not listed must submit in accordance with Specification Section - SUBSTITUTION PROCEDURES.

2.2 MATERIALS

A. Unexposed finish forms:
1. Provide plywood, lumber, or another acceptable material.
a. Lumber shall be dressed on at least two edges and one side for tight fit, complying with WCLIB Standard Grading and Dressing Rules #17, for Douglas Fir Form Lumber.
b. When plywood is used, provide panels complying with PS1, B-B (Concrete Form) Plywood, Group 1, EXT-APA mill-oiled and edge-sealed, with each piece bearing legible inspection trademark.

B. Exposed finish forms:

2.3 ACCESSORIES

A. Cement Compound Plugs:
1. Provide gray colored cement compound plugs ("SnaPlug" by MEADOW / BURKE, or approved equivalent) in highly visible concrete surface areas.

a. Provide "flush type" in cone holes of size appropriate to the hole size created by tie-holes.

2. Provide a waterproof neoprene adhesive ("SnaPlug Bonder" by MEADOW / BURKE, or approved equivalent), resistant to weather aging and bacterial growth, for adhering cement compound plugs into cone holes.

B. Chamfer Strips:

1. Provide wood chamfer strips free of knots, for forming edges of cast-in-place concrete.

C. Double Sided Foam Tape: Provide "Scotch" double sided, high density, pressure sensitive adhesive, foam tape as manufactured by The Tape Divison of 3M PRODUCTS, INC., or approved equivalent.

D. Form release agent:

1. Provide commercial formulation form release agent with a maximum volatile organic compounds (VOC's) in compliance with the CARB in the area where the project is located, that will not bond with, stain, or adversely affect concrete surfaces and will not impair subsequent treatments of concrete surfaces.
2. Provide form liner manufacturer's form release agent when a particular form liner is used to maintain compatibility with form release agent and the form liners used for this project.

E. Rustication Strips:

1. Provide wood rustication strips free of knots, for forming straight continuous reveals (either vertically or horizontally) and PVC rustication strips as manufactured by MEADOW / BURKE, for forming curved continuous reveals (either vertically or horizontally).

F. Spreaders and ties for loose plywood forming:

1. Spreader Ties: Use metal spreaders and ties for surfaces to be sacked. Use type that will give positive tying and accurate spreading for accurate sizing of cast walls or forms. Snap type shall leave no metal closer than 1-1/2 inches from exposed surface of concrete and have spreader cones no larger than 1 inch diameter.

G. Nailer Strip:

1. Provide decay resistant pressure treated wood nailer strips of sizes and locations indicated on the drawings.
2. All pressure treated wood (decay or fire-retardant) shall be in accordance with the applicable standards of the AWPA as referenced in the Specification Section - ROUGH CARPENTRY.

PART 3 - EXECUTION

3.1 PREPARATION

A. Surface preparation:

1. Consult with other Trades relative to required openings, and items to be imbedded in concrete (i.e., piping, conduit, hangers, reglets, anchors, inserts, sleeves, etc.). Coordinate work specified under other sections to ensure proper, adequate interfacing between trades, for openings, chases, blockouts, and other required interfacing items.

3.2 ERECTION

A. All formwork shall be:
   1. Designed and constructed in accordance with ACI Standard 347 "Recommended Practice for Concrete Formwork".
      a. Follow ACI 303R "Guide to Cast-In-Place Architectural Concrete" for further recommendations in design and use of Patterned Form Liners.
   2. Construct to size, shape, alignment, elevation and position of all concrete elements.
      a. Provide for openings, offsets, sinkages, keyways, recesses, moldings, rustications, reglets, chamfers, blocking, screeds, bulkheads, anchorages, inserts, and other features required in the work. Use selected materials to obtain required finishes.
   3. Properly separate and securely tie with Spreaders and Ties to maintain proper shape. Wood spreaders shall not be allowed to remain in concrete work.
      a. Use "Penta-Ties" where indicated on the drawings. Glue in cement compound plugs.
   4. Brace, support and center sufficiently to carry without excessive deflection all live and dead loads imposed during construction and placement of concrete, and to insure safety to workers and passersby.
      a. Block adjoining permanent pan units left in place to prevent lateral deflection of forms while placing concrete.
   5. Properly construct to eliminate all open joints or discontinuous surfaces.
      a. Solidly butt joints with double sided foam tape, apply silicone sealant at concrete face, and provide backup at joints to prevent cement paste or mortar from leaking.

B. All joints shall be:
   1. Uniform and backed by 2 inch material.
   2. Continuous and level or plumb.
   3. Sufficiently tight (with double sided foam tape and silicone sealant) to prevent leakage of cement paste.
      a. Locate joints of formwork whenever possible at rustication joints.
   4. Subject to Architect's approval.

3.3 INSTALLATION

A. General: Design, engineer, erect, support, brace, and maintain formwork to support vertical, lateral, static, and dynamic loads that might be applied until concrete structure can support such loads. Construct formwork so concrete members and structures are of correct size, shape, alignment, elevation, and position.
   1. Architectural Concrete elements shall be formed with MDO (or HDO) form plywood where face uniformity is required such as on signs, plaques, kiosks, and landscape elements.
   2. Side forms at unexposed footings may be omitted if excavation stands without caving.
      a. Make footing trench two (2) inches wider than width of concrete footing indicated on the drawings, when earth is used as a form.
      b. Cut trenches true and straight.
      c. Make side cuts neat and plumb.
      d. Bottom of trenches shall be level with reasonably sharp corners.
   3. Formwork above grade (stairs, curbs, exposed faces of concrete foundations, etc.) shall be:

a. Plywood type as specified treated with Sealer.
b. Constructed with plumb and level joints.
c. Separated with removable or snap type Spreaders and Ties. Do not use wire ties.

4. Unintentional indentations in the surface of the concrete left after removal of spreaders and ties shall be filled and sacked unless the architect's approval is given to do otherwise.
   a. Install Cement Compound Plugs where exposed form tie indentations occur.
5. Sleeves, anchors and bolts, angles, supports, ties and other materials in connection with concrete construction shall be secured in position before the concrete is placed.

3.4 CONSTRUCTION

A. Special Techniques – Form Removal and Reuse of Forms:
   1. All forms shall be completely removed.
   2. Time of Removal shall be in accordance with ACI 301 "Specifications for Structural Concrete", which requires concrete to reach its specified compressive strength. Variations to the time of removal are listed below subject to the concrete reaching its specified compressive strength:
      a. Dependent on weather conditions.
         1) Due to excessive cold weather for a long duration of days, and subject to the Architect's approval, the time for removal may be extended if deemed necessary.
      b. Dependent on cylinder test results.
      c. Dependent on recommendations of additive manufacturer when additives are admitted to the mix.
      d. Typically (verify with three statements above before initiating the following):
         1) Foundation Side Forms: Five (5) days after concrete is poured.
         2) Wall Forms: Ten (10) day after concrete is poured.
         3) Beam, Slab and Joist Soffit Forms:
            a) Twenty-One (21) days after concrete is poured
            b) Re-shore as required to support dead loads and any construction loads applied.
      e. Remove forms in a manner, which will not harm concrete. Do not hammer or pry against concrete.
   3. Nails, tie wires and form ties shall be cut off flush with face of concrete.
   4. Snap type spreaders to be snapped off inside the wall surface.
   5. Clean and repair surfaces of forms to be reused in the work. Split, frayed, delaminated, or otherwise damaged form-facing material will not be acceptable for exposed surfaces. Apply new form-release compound as specified for new formwork.
   6. When forms are extended for successive concrete placement, thoroughly clean surfaces, remove fins and laitance, and tighten forms to close joints. Align and secure joint to avoid offsets. Do not use patched forms for exposed concrete surfaces except as acceptable to the Architect.

B. Site Tolerances:
   1. Maintain formwork construction tolerances and surface irregularities complying with the following ACI 347 "Guide to Formwork for Concrete" limits:
      a. Provide Class A tolerances (permitted irregularities are 1/8" in 10' for both gradual and abrupt) for all concrete surfaces exposed to view, or surfaces that will receive additional applied finishes.

2. Concrete work out of alignment, or level or plumb exceeding the allowable tolerance will be cause for rejection of the whole work affected. Such work shall be removed and replaced as directed by Architect with no additional cost to Owner.

3.5 CLEANING

A. Thoroughly clean forms and adjacent surfaces to receive concrete. Remove chips, wood, sawdust, dirt, or other debris just before placing concrete. Retighten forms and bracing before placing concrete, as required, to prevent leakage of cement paste and maintain alignment.

B. Remove all wood used for formwork from trenches. No wood shall be left buried in the earth.

C. Final cleaning shall be in accordance with Specification Section – PROJECT CLOSEOUT.

END OF SECTION

INTENTIONALLY LEFT BLANK

SECTION 031514 – DRILLED ANCHORS

PART 1 - GENERAL

1.1 SUMMARY

A. This Section includes the following:
   1. Provide all Drilled Anchor materials, labor, equipment and services necessary for Expansion, and Adhesive Anchors in Concrete, and Concrete Masonry Units, and related items necessary to complete the Project as indicated by the Contract Documents unless otherwise specifically excluded.

B. Related Sections: The following Project Manual Sections contain requirements that relate to this section:
   1. ALL DIVISION 00 SPECIFICATION SECTIONS.
   2. ALL DIVISION 01 SPECIFICATION SECTIONS.
   3. 03 11 01 CONCRETE FORMWORK
   4. 03 20 00 REINFORCEMENT
   5. 03 30 00 CAST-IN-PLACE CONCRETE
   6. 04 22 00 CONCRETE MASONRY UNITS
   7. 05 12 00 STEEL AND FABRICATIONS
   8. 05 30 00 METAL DECK
   9. 06 10 00 ROUGH CARPENTRY
   10. 06 41 23 MODULAR CASEWORK
   11. ALL SPECIFICATION SECTIONS IN THE FACILITY SERVICES SUBGROUP.
   12. ALL SPECIFICATION SECTIONS IN THE SITE AND INFRASTRUCTURE SUBGROUP.

1.2 SUBMITTALS

A. Submit in accordance with Specification Section - SUBMITTAL PROCEDURES:
   1. Product Data.
      a. Submit manufacturer's product data for all expansion and adhesive anchors to be used in this project.
         1) Submit current ICC Evaluation Services research or evaluation reports evidencing maximum allowable shear and withdrawal load data.
   2. Quality Assurance / Control Submittals:
      a. Test Reports: Submit to DSA, copy to Project Inspector and Contractor.
         1) Tension Testing as required.

1.3 QUALITY ASSURANCE

A. Single Source Responsibility:
   1. To ensure consistent quality of anchorage, obtain drilled anchors from a single manufacturer.
   2. To ensure consistency of anchorage, obtain adhesive for anchorage from a single manufacturer.

B. Manufacturer Qualifications: Provide drilled and adhesive anchors from a manufacturer that can demonstrate ICC approvals that are current and acceptable to review by the DSA/SSS.

C. In accordance with Specification Section - REGULATORY REQUIREMENTS and the following:
   1. ICC International Code Council
   2. IR Interpretation of Regulations

D. Job Testing: For verifying satisfactory installation workmanship, an independent laboratory will perform proof load tests of drilled anchors acting in tension or shear in the presence of the Project Inspector.
   1. When drilled-in expansion-type anchors or other post-installed anchors acceptable to the enforcement agency are used in lieu of cast-in-place bolts, the allowable shear and tension values and installation verification test loads shall be acceptable to the enforcement agency.

1.4 DELIVERY, STORAGE, AND HANDLING

A. Deliver products in original, unopened packages with manufacturer's labels identifying products legible and intact.

B. Store materials inside, under cover and in a manner to keep them dry, protected from the weather, surface contamination, corrosion, damage from construction traffic and other causes.

1.5 WARRANTY

A. Contractor's General Warranty:
   1. In accordance with Specification Section - WARRANTIES.

B. Manufacturer's Warranty:
   1. In accordance with manufacturer's written standard warranty:
      a. Warranty Period One (1) Year.

C. Installer's Warranty:
   1. In accordance with the terms of the Specification Section - WARRANTIES.
      a. Warranty Period One (1) Year.

PART 2 - PRODUCTS

2.1 MANUFACTURERS

A. These products listed herein establish the size, pattern, color range and function selected by the Architect for this Project. Manufacturers that are listed as acceptable alternative manufacturers and substitutions must still comply with the requirements of this project and the products listed in order to be approved as an equivalent during the Submittal Process. If the acceptable alternative manufacturers listed or substitutions are not approved during the Submittal Process due to non-compliance with the contract documents, then the Contractor shall submit product specified.

1. Specified Product Manufacturer:
   a. Expansion Anchors:
      1) HILTI INC.
      2) Acceptable Alternative Manufacturers:
         a) ITW RAMSET/RED HEAD.
         b) SIMPSON.
         c) WEJ-IT.
   b. Adhesive Anchors:
      1) HILTI INC.
      2) Acceptable Alternative Manufacturers:
         a) ITW RAMSET/RED HEAD.
         b) SIMPSON.
         c) WEJ-IT.

B. Products from other manufacturers not listed must submit in accordance with Specification Section - SUBSTITUTION PROCEDURES.

2.2 MATERIALS

A. Provide manufacturers standard drilled anchors (expansion or adhesive) for installation into Concrete or Concrete Masonry Units unless noted otherwise.
   1. Metal Finishes (corrosion resistant):
      a. Zinc Plated Carbon Steel

B. Expansion Anchors:
   1. Wedge Anchors: The WEDGE category features a small split expansion ring installed on a tapered (integral cone) part of the stud at the bottom. As the nut is tightened, withdrawing the stud portion from the hole, the expansion ring engages the concrete and is further expanded on the tapered part of the stud.
   2. Sleeve Anchors: The SLEEVE category is similar to the wedge except a large expansion sleeve is used instead of a small expansion ring. The outside of the sleeve defines the anchor diameter with the threaded stud being of a smaller diameter since it fits inside the sleeve. The stud has an integral cone expander at the bottom similar to the wedge category. The expansion mechanism is similar to the wedge category except the top of the sleeve is normally in contact with the nut/washer and is initially forced down over the cone expander as the anchor is tightened. As the sleeve is expanded, it engages the concrete and continues to expand as the wedge anchor.
   3. Shell Anchors: The SHELL category has the most variations, but all use a tapered cone expander, either internal or external, to expand the shell of the anchor against the hole. The anchor is either hammered down over an external expander or a special tool is used to drive an internal expander further into the anchor.

C. Adhesive Anchors which chemically bonds Steel Rods or Deformed Steel Reinforcement Dowels to concrete or masonry elements:
   1. Threaded Steel Rods with minimum yield strength of 36 ksi and complying with ASTM A36 "Specification for Carbon Structural Steel", or ASTM A193 "Specification for Alloy-Steel and Stainless Steel Building Materials for High Temperature or High Pressure Service and Other Special Purpose Applications", Grade B7.

2. Deformed Steel Reinforcement Dowels shall be a minimum of Grade 60 and comply with ASTM A615 "Specification for Deformed and Plain Carbon-Steel Bars for Concrete Reinforcement" or ASTM A706 "Specification for Low-Alloy Steel Deformed and Plain Bars for Concrete Reinforcement".
3. Adhesives, consisting of two primary components that are stored separately, and having a mixing nozzle provided by the manufacturer combining the components prior to placing in the holes.
4. Long term durability and stability of the adhesive anchor material and its resistance to loss of strength and chemical change at elevated temperatures shall be established to the satisfaction of the enforcement agency.

PART 3 - EXECUTION

3.1 PREPARATION

A. Coordination:
1. Coordinate and provide anchors and installation instructions from the manufacturer for items to be embedded in Concrete or Concrete Masonry Unit construction. Manufacturer's written installation instructions shall be available on the project site.

3.2 INSTALLATION

A. Fastening to In-Place Construction: Provide anchorage devices where necessary for securing designated items indicated on the drawings, or as necessary for a complete and proper job to in-place construction.
1. Install the anchors in accordance with the requirements given in the ICC Evaluations Services Report recommendations for the specific anchor used.
2. When installing expansion anchors through metal deck into concrete, the anchors should be installed in the center of the low flute of the decking where practicable in minimum 20 gage deck.
3. Install Adhesive Anchors by placing adhesive into specially prepared holes, then insert rods or dowels into holes in a manner that disperses the adhesive to assure maximum contact between adhesive, surface of the holes and surface of the anchor.
   a. Adhesive anchors shall not be used in overhead applications.

B. Cutting, Fitting, and Placement: Perform cutting, drilling and fitting required for designated items of construction. Set work accurately in location, alignment and elevation, level true and free of rack, measured from established lines and levels.
1. The minimum edge distance and spacing of wedge and adhesive anchors shall not be less than ten (10) diameters or as required by ICC Evaluation Service Report unless specifically shown on drawings.

C. Use care and caution to avoid cutting or damaging reinforcing bars in Reinforced Concrete or Concrete Masonry Construction.

D. Do not install expansion or adhesive anchors in recently placed concrete which has not had a minimum 28 day curing period and which has not been accepted as having a minimum compressive strength of 3000 psi.

3.3 FIELD QUALITY CONTROL

A. Testing, General:
1. Perform testing in accordance with ACI 318 "Building code Requirements for Structural Concrete and Commentary", and herein specified.
   a. When expansion or adhesive anchors are listed for sill plate bolting applications, 10 percent of the anchors shall be tension tested.
   b. When expansion or adhesive anchors are used for other structural applications, , all such anchors shall be tension tested.
      1) Expansion-type anchors shall not be used as hold-down bolts.
   c. When expansion or adhesive anchors are used for nonstructural applications such as equipment anchorage, 50 percent or alternate bolts in a group shall be tension tested, except that if the design load is less than 75 pounds, only one anchor in ten need be tested. See drawings for items weighing 75 pounds or less.
      1) The tension testing of the anchors shall be done in the presence of the Project Inspector and a report of the test results shall be submitted to the enforcement agency DSA/SSS.
2. When expansion anchors are used for ceiling hanger wires, 1 out of 10 must be field tested for 200 pounds of tension per IR 25-2.
3. The proof load may be applied by any method that will effectively measure the tension in the anchor, such as direct pull with a hydraulic jack, calibrated spring-loading devices, etc.
4. If any anchor fails testing, test all anchors of the same category not previously tested until twenty (20) consecutive pass, then resume the initial testing frequency.
   a. The cost of any additional testing as a result of failures shall be the responsibility of the Contractor at no additional cost to the Owner.
5. When a drilled-in adhesive anchor is used in lieu of a required cast-in-place bolt, cost of testing shall be the responsibility of the Contractor at no additional cost to the Owner.

B. Testing:
1. Expansion Anchors:
   a. Anchor diameter refers to the thread size for the WEDGE & SHELL categories, and to the anchor outside diameter for the SLEEVE category and Adhesive anchors.
   b. Apply proof test loads to WEDGE & SLEEVE anchors without removing the nut if possible. If not, remove nut & install a threaded coupler to the same tightness of the original nut using a torque wrench & apply load.
   c. For SLEEVE/SHELL internally threaded categories, verify that the anchor is not prevented from withdrawing by a baseplate or other fixtures. If restraint is found, loosen and shim or remove fixture(s) prior to testing.
   d. Reaction loads from test fixtures may be applied close to the anchor being tested, provided the anchor is not restrained from withdrawing by the fixture(s).
   e. SHELL type anchors shall be tested as follows:
      1) Visually inspect 25 percent for full expansion as evidenced by the location of the expansion plug in the anchor body.
         a) Plug location of a fully expanded anchor shall be as recommended by the manufacturer, or , in the absence of such compensation, as determined on the job site following the manufacturer's written installation instructions.

b) At least 5 percent of the anchors shall be proof loaded as indicated in the Test Values schedule on the drawings, but not less than three anchors per day for each different person or crew installing anchors. or;

2) Test installed anchors per ACI 318 "Building code Requirements for Structural Concrete and Commentary".

2. Adhesive Anchors:
   a. Adhesive anchors shall be tension tested. The tension test load shall equal twice the allowable load for the specific location of the anchor to be tested (i.e., accounting for edge distance) or 80 percent of the yield strength of the bolt (0.8AbFy), whichever is less.
      1) The test procedure for expansion-type anchors in the test values table shall also be used for the adhesive anchors.
   b. Where adhesive anchors are used as shear dowels across cold joints in slabs-on-grade and the slab is not part of the structural system, testing of those dowels is not required.
   c. Anchors shall exhibit no discernable movement during the tension test.
3. Test equipment (including torque wrenches) is to be calibrated by an approved testing laboratory in accordance with standard recognized procedures.
   a. Alternate torque test procedures and test values for SHELL type anchors may be submitted to the enforcement agency for review and approval on a case-by-case basis when test procedures are submitted and approved by the enforcement agency.
4. The following criteria apply for the acceptance of installed anchors:
   a. HYDRAULIC RAM METHOD: The anchor should have no observable movement at the applicable test load. For wedge and sleeve type anchors, a practical way to determine observable movement is that the washer under the nut becomes loose.
   b. <u>TORQUE WRENCH METHOD:</u> The applicable test torque must be reached within the following limits:
      1) Wedge or Sleeve Type: One-half (1/2) turn of the nut.
         a) One-quarter (1/4) turn of the nut for the 3/8 inch sleeve anchor only.
      2) Torque testing of adhesive anchors is not permitted.
5. If the manufacturer's recommended installation torque is less than the test torque note in the table, the manufacturer’s recommended installation torque shall be used in lieu of the tabulated values.
6. Testing should occur 24 hours minimum after installation of the subject anchors.
7. Required Maximum Test Values for Concrete, or Concrete Masonry Units in tension for the ranges and sizes of Drilled Anchors are shown on the drawings.

END OF SECTION

SECTION 032000 – REINFORCEMENT

PART 1 - GENERAL

1.1 SUMMARY

A. This Section includes the following:
   1. Provide all reinforcement material, labor, equipment and services necessary to completely install all reinforcing materials, accessories and other related items necessary to complete the Project as indicated by the Contract Documents.

B. Related Sections: The following Sections contain requirements that relate to this Section:
   1. ALL DIVISION 00 SPECIFICATION SECTIONS.
   2. ALL DIVISION 01 SPECIFICATION SECTIONS.
   3. 03 11 01 CONCRETE FORMWORK
   4. 03 15 14 DRILLED ANCHORS
   5. 03 30 00 CAST-IN-PLACE CONCRETE
   6. 04 22 00 CONCRETE MASONRY UNITS
   7. 05 12 00 STEEL AND FABRICATIONS
   8. 10 75 00 FLAGPOLES
   9. ALL SPECIFICATION SECTIONS IN THE FACILITY SERVICES SUBGROUP.
   10. ALL SPECIFICATION SECTIONS IN THE SITE AND INFRASTRUCTURE SUBGROUP.

1.2 REFERENCES

A. The following References and Manufacturer's Standards shall apply to this Specification Section:
   1. ACI American Concrete Institute
   2. ASTM American Society for Testing and Materials
   3. AWS American Welding Society
   4. CRSI Concrete Reinforcing Steel Institute

1.3 SUBMITTALS

A. Submit in accordance with Specification Section - SUBMITTAL PROCEDURES:
   1. Product Data:
      a. Manufacturer's specification and installation instructions for splice devices.
         1) Bar supports.
   2. Shop Drawings
      a. Detail in accordance with ACI 315 "Details and Detailing of Concrete Reinforcing".
      b. Indicate bending diagrams, assembly diagrams, splicing and laps of bars and shapes, dimensions and details of bar reinforcing and assemblies. Correctness of all reinforcing requirements and work is the responsibility of Contractor. Identify such shop drawings with reference thereon to sheet and detail numbers from Contract Drawings.

1) Do not use scaled dimensions from Contract Drawings in determining the lengths of reinforcing bars.
2) No reinforcing steel shall be fabricated without approved shop drawings.
3) One of the required submittal copies shall be reproducible transparency.
4) Any deviations from the contract documents must be clearly indicated as a deviation on the shop drawings.
5) Areas of high congestion, including member joints and embed locations shall be fully detailed to verify clearances and assembly parameters and coordination with other trades.

c. Certificates of Compliance with specified standards:
1) Reinforcing Bars.
2) Welded wire fabric.
3) Welding electrodes.

3. Samples
a. Only as requested by Architect.

4. Quality Assurance/Control Submittals:
a. Test Reports – Testing Laboratory shall submit to DSA/SSS, Project Inspector, Architect, Structural Engineer and the Contractor one (1) copy of each report showing results of test.
1) Certified mill test reports of supplied reinforcing indicating chemical and physical analysis. Tensile and bend tests shall be performed by the mill in accordance with ASTM A615 "Specification for Deformed and Plain Carbon-Steel Bars for Structural Concrete".
2) Testing Laboratory reinforcement tests in accordance with CBC Table 1705A.2.1, CBC Section 1913A, and the provisions of Specification Section – TESTING LABORATORY SERVICES.
3) Owner will pay for tests of samples taken from identified bundles accompanied by mill analysis.

b. Certificates of Compliance with specified standards:
1) Reinforcing bars.
2) Welded wire fabric.
3) Welding electrodes.
4) Welder's Certification.

5. Closeout Submittals:
a. Project Record Documents in accordance with Specification Section - PROJECT DOCUMENTS.
b. Warranty.

1.4 QUALITY ASSURANCE

A. Qualifications:
1. Installer Qualifications:
a. Installation shall be done only by an installation firm normally engaged in this business. All work shall be performed by qualified mechanics working under an experienced supervisor.

2. Welding Qualifications:
a. Welding procedures, welding operators and welders shall be qualified in accordance with AWS D1.4 – "Structural Welding Code Reinforcing Steel".
b. Welders shall be recently qualified by Test as prescribed in AWS "Standard Qualifications Procedure".

1) Welders whose work fails to pass inspection shall be re-qualified before performing further welding.

3. Manufacturer/Supplier Qualifications:
   a. Acceptable Manufacturers/Suppliers shall be regularly engaged in the manufacture of steel bar and wire fabric reinforcing.
4. Testing Laboratory will be approved by DSA/SSS, and selected by the Architect and the Owner.

B. Regulatory Requirements:
1. In accordance with Specification Section – REGULATORY REQUIREMENTS and the following:
   a. CARB Materials and equipment used for this Project shall comply with the current applicable regulations of the California Air Resources Board (CARB)and the Environmental Protection Agency (EPA), in the area where the project is located.

C. General:
1. Reinforcement work shall conform to ACI 301 "Specifications for Structural Concrete for Buildings", and CBC Section 1905A and 1913A as minimum standards.

1.5 DELIVERY, STORAGE, AND HANDLING

A. Packing, shipping, handling, and unloading:
1. Deliver reinforcement to Project plainly tagged, completely fabricated and ready to set.

B. Storage and protection:
1. Store reinforcement above the ground surface on platforms, skids or other supports, protected form dirt, rust, or other substances which will prevent bonding to the concrete.
2. Use all necessary care to maintain identification after bundles are taken apart.

1.6 WARRANTY

A. Contractor's General Warranty:
1. In accordance with Specification Section - WARRANTIES.

B. Manufacturer's Warranty:
1. In accordance with manufacturer's written standard warranty:
   a. Warranty Period One (1) Year.

C. Installer's Warranty:
1. In accordance with the terms of the Specification Section - WARRANTIES.
   a. Warranty Period One (1) Year.

PART 2 - PRODUCTS

2.1 MATERIALS

A. Deformed Bars: In accordance with ASTM A 706 "Low Alloy Steel Deformed Bars for Concrete Reinforcement" and ASTM A 615 "Specification for Deformed and Plain Carbon-Steel Bars for Concrete Reinforcement", Grade as indicated on the structural drawings.

B. Tie Wire: In accordance with ASTM A 82 "Cold Drawn Wire for Concrete Reinforcement", plain, cold-drawn steel.

C. Spirals: Smooth round in accordance with ASTM A 615 "Specification for Deformed and Plain Carbon-Steel Bars for Concrete Reinforcement", or cold drawn ASTM A82 "Cold Drawn Wire for Concrete Reinforcement".

D. Welded Wire Fabric: In accordance with ASTM A 185 "Welded Steel Wire Fabric for Concrete Reinforcement".

E. Steel Dowels: Same grade as bars to which dowels are connected.

2.2 ACCESSORIES

A. Supports for Reinforcement: Provide bolsters, chairs, spacers, and other devices for spacing, supporting, and fastening, deformed bars and welded wire fabric in place. Use wire bar-type supports complying with CRSI specifications.
   1. Supports and spacing of spacers per standards set forth by CRSI/WCRSI Manual of Standard Practice.
   2. For slabs-on-grade, use supports with sand plates or horizontal runners where base material will not support chair legs.
   3. For exposed-to-view concrete surfaces, where legs of supports are in contact with forms, provide supports with legs that are protected by plastic [color to match adjacent concrete surfaces] in accordance with CRSI Class I, or stainless steel in accordance with CRSI, Class II.

B. Welding Electrodes: As per AWS D1.4 "Structural Welding Code for Reinforcing Steel".

C. Mechanical Couplers: Mechanical Couplers shall develop 125 percent of the specified yield strength of the bars, and shall comply with ACI 318 "Building Code Requirements for Structural Concrete and Commentary", Section 12.14.3.

2.3 FABRICATION

A. Bending: In accordance with ACI 318 "Building Code Requirements for Structural Concrete and Commentary", except as modified by CBC Sections 1905A.
   1. Fabricate reinforcement in accordance with the requirements of ACI 315 "Details and Detailing of Concrete Reinforcement", where specific details are not shown.
   2. Inside diameter of bends for stirrups and ties shall not be less than 1-1/2 inches for No. 3 bars, 2 inches for No. 4 bars and 2-1/2 inches for No. 5 bars.

3. Where bent bars are straightened: field bending of bars will only be done in accordance with DSA/SSS approval per ACI 318 "Building Code Requirements for Structural Concrete and Commentary", Section 7.3.2. Steel reinforcement shall not be bent or straightened in a manner that will injure the material. Bars with kinks or bends not shown on the drawings shall not be used. Heating of bars will not be permitted.
4. Provide offsets in rebar (1:6 maximum) where required to maintain clearances.

B. Column ties shall terminate with a minimum turn of 135 degrees plus an extension of at least 6 bar diameters but not less than 4 inches at the free end of bar.

C. Allowable Tolerances:
1. Fabrication:
   a. Sheared length: 1 inch.
   b. Depth of truss bars: Plus 0., minus 1/2 inch.
   c. Ties: Plus or minus 1/2 inch.
   d. All other bends: Plus or minus 1 inch.

PART 3 - EXECUTION

3.1 INSTALLATION

A. Placing:
1. Place Reinforcement accurately.
2. Do not move bars beyond allowable without concurrence of the Architect.
3. Do not heat, bend, or cut bars without concurrence of the Architect.
4. Reinforcement shall not be bent after being embedded in hardened concrete.
5. Tie Reinforcement together at all intersections with Tie Wire.
6. Support Reinforcing Bars by bar supports. Place and secure in accordance with CRSI "Specifications for Placing Bar Supports".
7. Placement and support shall be complete.
8. Do not use Reinforcing Bars with kinks or bends except when detailed on the structural drawings.
9. Architect shall approve placement and support before concrete is deposited.
10. Spiral reinforcing shall comply with ACI 318 "Building Code Requirements for Structural Concrete and Commentary".

B. Spacing:
1. Clear space between parallel Reinforcing Bars shall not be less than 1 bar diameter nor less than 1 inch, unless otherwise noted on drawings.

C. Splicing:
1. At splices, lap Reinforcing Bars 53 diameters minimum, unless otherwise indicated on Drawings.
   a. Lap Splices: Tie securely with wire to prevent displacment of splices during placment of concrete.
   b. Splice Devices: Install in accordance with manufacturer's written instructions.
      1) Obtain the Architect's review before using.
   c. Do not splice bars except at locations shown without the concurrence of the Architect.

1) Where splices in addition to those indicated are required, indicate location on shop drawings clearly and highlight "for the Architect's approval".

2. Stagger splices as indicated on drawings. Splice locations shall be as shown on drawings or shall be approved by Architect and DSA/SSS.
   a. Near floors.
   b. Ductile concrete columns must splice at the centerline of the column height.
   c. As detailed on the drawings.
3. Where vertical Reinforcing Bars are offset at a splice, the slope of the inclined portion of bar with the axis of the column or wall shall not exceed 1 in 6.
4. Welded Wire Fabric:
   a. Install in long lengths, lapping 24 inches at end splices and one mesh at side splices.
   b. Offset laps in adjacent widths.
   c. Place fabric in approximately the middle of the slab thickness unless otherwise shown on the drawings.
   d. Wire tie lap joints at 12 inch centers.
   e. Use concrete blocks to support mesh in proper position.
5. Mechanical bar splices shall be approved by the Architect and DSA/SSS.

D. Welding:
1. Welding is not permitted unless specifically detailed on Drawings or approved by the Architect.
2. Weld under supervision of qualified Testing Laboratory selected by Owner. Cost of supervision to be paid by the Owner. Weld only ASTM A 706 "Specification for Low-Alloy Steel Deformed and Plain Bars for Concrete Reinforcement", unless otherwise noted.
3. Employ shielding metal-arc method and meet requirements of AWS D1.4 "Structural Welding Code for Reinforcing Steel".
4. Welding is not permitted on bars where carbon equivalent is unknown or is determined to exceed 0.55.
5. Welding shall not be done within two bar diameters of any bent portion of a bar which has been bent cold.
6. Welding of crossing bars is not permitted.
7. Provide material properties supplemental report for bars other than ASTM A706 "Low Alloy Steel Deformed Bars for Concrete Reinforcement".
8. Weld in accordance with AWS D1.4 "Structural Welding Code for Reinforcing Steel".
   a. Weld only where indicated on the drawings.
   b. Weld only ASTM A 615 "Specification for Deformed and Plain Carbon-Steel Bars for Concrete Reinforcement", unless otherwise approved by the Architect and DSA/SSS.
9. Inspection provided per CBC Table 1705A.

E. Allowable Tolerances:
1. Placement:
   a. Concrete cover to form surfaces: Plus or minus 1/4 inch.
   b. Minimum spacing between bars: Plus or minus 1/4 inch.
   c. Crosswise of members: Spaced evenly with 2 inches of stated separation.
   d. Lengthwise of members: Plus or minus 2 inches.
2. Maximum bar movement to avoid interference with other reinforcing steel, conduits, or embedded items: 2 bar diameters.

F. Drawing Notes: Refer to notes on drawings for additional reinforcement requirements.

G. Mechanical, Electrical and Plumbing Drawings:
   1. Refer to Mechanical, Electrical and Plumbing drawings for formed concrete requiring reinforcing steel.
   2. All such steel shall be included under the work of this section.

3.2 CONSTRUCTION

A. Corrective Measures:
   1. Notify Architect if conduit, piping, inserts, sleeves, etc. interfere with placement of Concrete Reinforcement as indicated on Drawings. Notify Architect immediately if any Concrete Reinforcement is found to be misplaced after concrete has been poured.
   2. Do not cut, bend, kink or hicky misplaced reinforcement.
   3. Make corrections only as directed by Architect and approved by DSA/SSS.
   4. This Contractor shall bear the cost of any alteration, corrections or replacements of Concrete Reinforcing to concrete required because of misplaced reinforcement.

3.3 FIELD AND QUALITY CONTROL

A. Site Tests:
   1. When inspections are indicated for reinforcement placement on the Structural drawings, a special inspector shall be employed to inspect reinforcing placement per CBC Table 1705A.4.
   2. Inspect shop and field welding in accordance with AWS D1.4 "Structural Welding Code for Reinforcing Steel", including checking materials, equipment, procedure and welder qualifications as well as the welds. Inspector will use non-destructive testing or any other aid to visual inspection that he deems necessary to assure himself of the adequacy of the weld.

B. Inspections:
   1. All reinforcing steel whose properties are not identifiable by mill test reports shall be tested in accordance with ASTM A 615 "Specification for Deformed and Plain Carbon-Steel Bars for Concrete Reinforcement". One series of tests shall be performed for each missing report. Contractor shall pay for test required due to lack of positive identification, by means of a back charge by the Owner.
   2. When tests are indicated for reinforcing steel on the structural drawings, the reinforcing steel used shall be tested in accordance with ASTM A 615 "Specification for Deformed and Plain Carbon-Steel Bars for Concrete Reinforcement". One tensile and one bend test for each 2-1/2 tons of steel or fraction thereof, shall be made.

C. Tests and Inspection shall be performed by Owner's Testing Laboratory except when needed to justify rejected work, in which case the cost of re-tests and re-inspection shall be borne by the Contractor.

3.4 CLEANING

A. Reinforcement, at time concrete is placed, shall be free of loose rust scale, mud, oil or other coating that will destroy or reduce the bond.

END OF SECTION

SECTION 033000 - CAST-IN-PLACE CONCRETE

PART 1 - GENERAL

1.1 SUMMARY

A. This Section includes the following:
   1. Provide all material, labor, equipment and services necessary to completely install all Cast-In-Place Concrete materials, accessories and other related items necessary to complete the Project as indicated by the Contract Documents.
      a. Make ready all interior concrete substrates to receive flooring:
         1) Ensure the proper levelness and flatness of all concrete substrates for the intended flooring products.
            a) If leveling materials are required because of inadequate leveling during the pour and curing periods, follow all manufacturers written instructions for the proper preparation and application of these products.
            b) Verify that the concrete substrates are at the right RH (Relative Humidity) and Alkalinity Levels for the leveling materials in accordance with manufacturers written instructions.
         2) Keep finished concrete substrates clean and ready for scheduled flooring applications during the construction process.
            a) Protect those substrates from excessive moisture build-up, and keep free of moisture puddles.
            b) Ensure that construction equipment does not leak fluids on substrates that would prevent bonding of flooring adhesives at the proper time for flooring installations.
         3) Provide concrete substrates that are within acceptable limits of RH and that the Alkalinity of the concrete substrates are within the acceptable levels for adhesively applied flooring at the scheduled time for flooring installations.

B. Related Sections: The following Sections contain requirements that relate to this Section:
   1. ALL DIVISION 00 SPECIFICATION SECTIONS.
   2. ALL DIVISION 01 SPECIFICATION SECTIONS.
   3. 03 11 01 CONCRETE FORMWORK
   4. 03 15 14 DRILLED ANCHORS
   5. 03 20 00 REINFORCEMENT
   6. 03 35 00 POLISHED CONCRETE FINISHING
   7. 04 22 00 CONCRETE MASONRY UNITS
   8. 05 12 00 STEEL AND FABRICATIONS
   9. 06 10 00 ROUGH CARPENTRY
   10. 07 18 50 VAPOR-ALKALINITY CONTROL
   11. 07 40 00 METAL PANELS
   12. 07 92 00 SEALANTS
   13. 09 30 00 TILE
   14. 09 65 10 RESILIENT BASE AND ACCESSORIES
   15. 09 65 16 RESILIENT SHEET
   16. 09 67 23 RESINOUS FLOORING
   17. 09 68 40 CARPET

18. 10 05 00 MISCELLANEOUS SPECIALTIES
19. 10 14 00 IDENTIFYING DEVICES
20. 10 14 53 ROAD AND PARKING SIGNAGE
21. 10 21 13 TOILET PARTITIONS
22. 10 75 00 FLAGPOLES
23. 31 31 00 SOIL TREATMENT
24. 32 31 13 CHAIN LINK
25. ALL SPECIFICATION SECTIONS IN THE FACILITY SERVICES SUBGROUP.
26. ALL SPECIFICATION SECTIONS IN THE SITE AND INFRASTRUCTURE SUBGROUP.

1.2 REFERENCES

A. Standards:
1. In accordance with the following standards:
   a. ACI American Concrete Institute
   b. ASTM American Society of Testing Materials.
   c. RFCI The Resilient Floor Covering Institute

1.3 SUBMITTALS

A. Submit in accordance with Specification Section - SUBMITTAL PROCEDURES:
1. Coordination Drawings:
   a. Layout drawings for construction, control and expansion joints.
      1) Coordinate joints with floor patterns.
2. Product Data.
   a. Submit data on all products listed under MATERIALS, and ACCESSORIES within this specification section.
3. Quality Assurance/Control Submittals:
   a. Coordinate with Specification Section - TESTING LABORATORY SERVICES for additional Testing Requirements as required by DSA.
   b. Material samples and mix designs:
      1) Material samples and mix designs as required for testing shall be submitted to Architect at least fourteen (14) days prior to any concrete work and shall include results of test data used to establish proportions.
         a) Grout samples and colors for colored surfaces upon Architect's request only.
   c. Test Reports:
      1) Testing Laboratory shall submit to Architect, Structural Engineer, Owner, and to the DSA one (1) copy of each report showing results of tests.
         a) Report shall state that tests were made in accordance with specifications.
         b) Report shall state whether materials were in conformance with specifications.
         c) Report shall state whether the curing of the concrete slabs are within parameters required for future flooring installations.
   d. Certificates:
      1) Submit three (3) copies of certificates.

a) Provide Vapor Retarder manufacturer's certificate of inspection and compliance to installation procedures.
b) Cement manufacturer's Mill Certificate of Compliance with the specification.
c) Certificates for aggregates and admixtures.

4. Closeout Submittals:
   a. Project Record Documents in accordance with Specification Section - PROJECT DOCUMENTS.
   b. Warranty.

1.4 QUALITY ASSURANCE

A. Qualifications:
1. Installer Qualifications:
   a. Engage an experienced Installer who has successfully completed three (3) projects of similar scope and size to that indicated for this Project.
2. Manufacturer/Supplier Qualifications:
   a. Firm experienced in successfully producing/supplying products similar to that indicated for this Project, with sufficient production/supply capacity to produce/supply required units without causing delay in the Work.
3. Testing Laboratory Qualifications:
   a. Qualified Testing Laboratory and personnel approved by DSA.
      1) Cost of testing and inspection will be paid by the Owner unless otherwise specified. The Owner shall pay all costs of re-inspection and/or re-tests due to non-compliance with specifications and/or failures, but the Contractor shall reimburse the Owner for these tests when billed or deducted from its payment.

B. Regulatory Requirements:
1. In accordance with Specification Section - REGULATORY REQUIREMENTS, and the following:
   a. All materials, equipment and placing operations shall be subject to inspection, tests and approval at all items. Testing Agent shall have free and unhampered access to all places where concrete materials are stored proportioned and mixed.
   b. CARB Materials and equipment used for this Project shall comply with the current applicable regulations of the California Air Resources Board (CARB) and the Environmental Protection Agency (EPA), in the area where the project is located.

C. Mockups:
1. Cast-In-Place at the Project site 3' x 3' x 4" thick panel(s) of concrete for each type of Cast-In-Place concrete finish required for the project for Architect's approval prior to the placement of that type of concrete work.
   a. Cast-In-Place Concrete slabs that are to be Integrally Colored Mix Designs.
   b. Polished Concrete Finishing - coordinate with Specification Section - POLISHED CONCRETE FINISHING (designated Interior Building areas only).
      1) Mock-Up Size: One 1 - 3' x 3' sample panels at jobsite at location as directed under conditions similar to those which will exist during actual placement, showing a range of colors to be selected.

2) Mock-up will be used to judge workmanship, concrete substrate preparation, operation of equipment, material application, and integral concrete color selection.
3) Polished Concrete Finishing shall also be judged by the amount of "shine" required.

c. Allow 24 hours for inspection of mock-up before proceeding with work.
d. Protect the Mock-ups during the course of construction.
e. Remove mock-up and dispose of materials when no longer required and when directed by the Architect at the end of the project.

D. Meetings:
1. Pre-Installation: Scheduled by the Contractor prior to the start of work.
a. Coordinate the work with other related work being performed.
1) Schedule pre-construction conference with Vapor Retarder Manufacturer prior to installation at least one week prior to scheduled installation.
b. Identify any potential problems that may impede planned progress and proper installation of work regarding quality of installation and warranty requirements.
c. Prior to submitting design mixes, review detailed requirements for preparing concrete design mixes and determine procedures for satisfactory concrete operations.
d. Review requirements for submittals, status of coordinating work, and availability of materials.
e. Establish preliminary work progress schedule and procedures for materials inspection, testing, and certifications.
2. Progress: Scheduled by the Contractor during the performance of the work.
a. Review for proper installation of work progress.
1) Schedule installation review at the start of installation with the Vapor Retarder Manufacturer to ensure all of the manufacturers written instructions are complied with.
b. Identify any installation problems and acceptable corrective measures.
c. Identify any measures to maintain or regain project schedule if necessary.
3. Completion: Scheduled by the Contractor upon proper completion of the work.
a. Inspect and identify any problems that may impede issuance of warranties or guaranties.
1) Prior to covering up the Vapor Retarder installation with concrete, have the Vapor Retarder manufacturer inspect and provide a certified report to the Architect the condition of the Vapor Retarder prior to being covered with concrete, and that the installation was in full compliance with the manufacturer's written instructions.
b. Maintain installed work until the Notice of Substantial Completion has been executed.

1.5 PROJECT CONDITIONS

A. Environmental requirements:
1. Cold Weather Requirements:
a. Do not pour concrete unless air temperature is at least 40 degrees Fahrenheit and rising.
b. Do not pour concrete on frozen ground or ice.
c. Heat and otherwise prepare materials in accordance with ACI Standard 306.

d. Maintain concrete temperature at 50 degrees Fahrenheit (minimum) the first three (3) days after pouring. Protect concrete from freezing the first six (6) six days, after placing.

2. Hot Weather Requirements:
   a. Do not pour when temperature exceeds 90 degrees Fahrenheit.
   b. During hot weather, proper attention shall be given to ingredients, production methods, handling, placing, protection, and curing to prevent excessive Concrete temperatures or water evaporation, which will impair the required strength or serviceability of the member or structure.

1.6 WARRANTY

A. Contractor's General Warranty:
   1. In accordance with Specification Section - WARRANTIES.

B. Manufacturer's Warranty:
   1. In accordance with manufacturer's written standard warranty:
      a. Warranty Period One (1) Year.

C. Installer's Warranty:
   1. In accordance with the terms of the Specification Section - WARRANTIES
      a. Warranty period One (1) Year.

PART 2 - PRODUCTS

2.1 MANUFACTURERS

A. These products listed herein establish the size, pattern, color range and function selected by the Architect for this Project. Manufacturers that are listed as acceptable alternative manufacturers and substitutions must still comply with the requirements of this project and the products listed in order to be approved as an equivalent during the Submittal Process. If the acceptable alternative manufacturers listed or substitutions are not approved during the Submittal Process due to non-compliance with the contract documents, then the Contractor shall submit product specified.
   1. Cement:
      a. Natural (Grey) Portland Cement:
         1) LEHIGH PORTLAND CEMENT COMPANY.
         2) TXI CEMENT COMPANY (formerly RIVERSIDE WHITE CEMENT).
      b. White Cement:
   2. Admixtures:
      a. Water Reducing, High Range:
         1) W.R. GRACE CONSTRUCTION PRODUCTS.
      b. Shrinkage Reducing:
         1) Specified product manufacturer EUCLID.
            a) CONEX.
   3. Vapor Retarders:
      a. Specified product manufacturer: STEGO INDUSTRIES.
         1) "Stego-Wrap" ("Yellow" color).

b. Acceptable alternative product manufacturers:
   1) EPRO SERVICES, INC "Ecoshield-E15" ("Red" color).
   2) INSULATION SOLUTIONS, INC. "Viper Vaporcheck II" ("Blue" color).
   3) W.R. MEADOWS "Perminator 15" ("Green" color).

4. Bonding Agents:
   a. Specified product manufacturer: CONRAD SOVIG CO., INC.
      1) "Cemlok-NE"
   b. Acceptable alternative product manufacturers:
      1) THE EUCLID CHEMICAL COMPANY "Eucoweld".
      2) LARSON PRODUCTS CORPORATION "Weld-Crete".
      3) SONNEBORN "Sonobond".
      4) W.R. GRACE CONSTRUCTION PRODUCTS "Darweld C".
      5) W.R. MEADOWS "Deck-O-Weld".
5. Epoxy Adhesives and Mortar Materials:
   a. Specified product manufacturer W.R. MEADOWS.
      1) "Rezi-Weld," "LV, 1000" or "Gel-Paste" as suitable for application.
   b. Acceptable alternative product manufacturers:
      1) THE EUCLID CHEMICAL COMPANY "Euco #456".
6. Epoxy Concrete Mortar:
   a. Specified product manufacturer:
      1) GENERAL POLYMER CORPORATION. "TPM 115".
   b. Acceptable alternative product manufacturers:
      1) ANTI-HYDRO CORPORATION: "A-H Emery Epoxy Topping #170".
7. Concrete Mortar:
   a. Specified product manufacturer:
      1) THE EUCLID CHEMICAL COMPANY "Euco".
   b. Acceptable alternative product manufacturers:
      1) MASTER BUILDERS "Embeco 411-A".
8. Non-Shrink Grout:
   a. Specified product manufacturer:
      1) MINWAX CONSTRUCTION PRODUCTS COMPANY "POR-ROK" Epoxy Grout.
   b. Acceptable alternative product manufacturers:
      1) MASTER BUILDERS "713".
      2) MASTER BUILDERS "928".
9. Drypack Grout Materials:
   a. Specified product manufacturer:
      1) THE EUCLID CHEMICAL COMPANY"Euco Dry Pack Grout".
   b. Acceptable alternative product manufacturers:
      1) W.R. MEADOWS "Pac-It Grout".
10. Fiber Expansion Joint Filler:
   a. Specified product manufacturer:
      1) W.R. MEADOWS "Sealtight Fiber Expansion Joint Filler".
   b. Acceptable alternative product manufacturer:
      1) CELOTEX CORP."Flexcell".
      2) PHILLIP CAREY MFG. CO. "Elastic Fiber Expansion Joint".
11. Semi-Rigid Joint Filler:
   a. Specified product manufacturer:
      1) W.R. MEADOWS "Rezi-Weld Flex".

12. Stair Nosings:
    a. Specified product manufacturer:
        1) WOOSTER PRODUCTS INC.
            a) Straight Nosings "SUPERGRIT TYPE 231BF".
13. Curing Paper:
    a. Specified product manufacturer:
        1) FORTIFIBER CORPORATION. "Orange Label Sisalkraft".
14. Slab Curing Compound (SCC):
    a. Specified product manufacturer:
        1) THE EUCLID CHEMICAL COMPANY "Cure-Crete WB".
    b. Acceptable alternative product manufacturers:
        1) W.R. MEADOWS "Sealtight 1100 CLEAR".
15. Clear Floor Sealer (CFS):
    a. Specified product manufacturer:
        1) THE EUCLID CHEMICAL COMPANY "Diamond Clear VOX".
    b. Acceptable alternative product manufacturers:
        1) W.R. MEADOWS "Sealtight VOComp 25".
16. Clear Floor Hardener CFH):
    a. Specified product manufacturer:
        1) L.M. SCHOFIELD COMPANY "Emerchrome Clear Floor Hardener".
17. Colored Floor Hardener (COFH):
    a. Specified product manufacturer:
        1) L.M. SCHOFIELD COMPANY "Lithochrome Color Hardener" and "Lithochrome Color Sealer".
18. Cementitious Based Underlayment Compound (CBUC):
    a. Specified product manufacturer:
        1) ARDEX "V-1200".
    b. Acceptable alternative product manufacturers:
        1) MAPEI "Ultraflex".
        2) QUIKRETE PRODUCTS CORP. "QUIKRETE No. 1249".
19. Truncated Domes:
    a. Specified Cast-In-Place Replaceable Truncated Dome Mat product manufacturer:
        1) ADA SOLUTIONS, INC.
    b. Specified Surface Applied Truncated Dome Mat product manufacturer:
        1) ADA SOLUTIONS, INC.
20. Specified Protective Cover product manufacturer:
    a. RAM BOARD "Ram Board".
        1) Acceptable alternative product manufacturers:
            a) McTECH GROUP "EZcover".

B. Products from other manufacturers not listed must submit in accordance with Specification Section - SUBSTITUTION PROCEDURES.

2.2 MATERIALS

A. Concrete:
    1. Cement: Type I or II in accordance with ACI 318 "Building Code Requirements for Structural Concrete and Commentary", Chapter 3, and ASTM C 150 "Specifications for Portland Cement".

a. Provide white cement for mixing when the Project requires patching for defective work, to match adjacent material color. See Specification Section - CAST-IN-PLACE CONCRETE, Part 3 Article titled "APPLICATIONS", the paragraph titled "Sack Finish".

2. Water: Clean and free from deleterious amounts of acids, alkalis, salts, organic material, or other substances that may be deleterious to concrete or reinforcing.

3. Aggregates:

a. Normal weight aggregates in accordance with ACI 318 "Building Code Requirements for Structural Concrete and Commentary", Chapter 3 and ASTM C33 "Standard Specifications for Concrete Aggregates". Crushed Granite or "Perkins" type aggregates are acceptable materials.

1) Maximum Aggregate Size: 1-1/2 inches for standard aggregate.

2) Coarse aggregate when tested in accordance with State of California Highways Test Methods 227 shall have a cleanliness value of 75 minimum.

3) Fine aggregates when tested in accordance with State of California Highways Test Methods 217 shall have a sand equivalent of 75 minimum.

4. Admixtures: Admixtures shall be in accordance with the provisions of ACI 318 "Building Code Requirements for Structural Concrete and Commentary", Section 3.6, and shall not be used until prior approval from DSA has been obtained. Calcium Chloride is not permitted.

a. Fly Ash (Not to exceed 15 percent of the total cementitious material per DSA:

1) Conform to ASTM C 618 "Specification for Coal Fly Ash and Raw or Calcined Natural Possolan for Use in Concrete".

2) Class "C" Fly Ash is not permitted per CBC 1903A.5.

b. Water Reducing, High Range: On approval of DSA , the Architect and the Structural Engineer, the Contractor may use a High Range Water Reducing Admixture complying with ASTM C 494 "Specification for Chemical Admixtures for Concrete". Use one of the following materials:

1) Finish Enhancing Water Reducer; "ADVA 170" by GRACE Construction Products, or approved equivalent.

a) ASTM C 494 "Specification for Chemical Admixtures for Concrete", Type F.

c. Shrinkage Reducing:

1) Compensation and reduction of shrinkage for Portland Cement concrete, and expansive Type G component, which produces a calcium hydroxide platelet crystal system based on calcium aluminate / calcium hydroxide, as specified in ACI 223.

B. Rock Base:

1. Clean mixture of crushed stone or uncrushed gravel, in accordance with ASTM D 448 "Standard Classification for Sizes of Aggregate for Road and Bridge Construction".

a. Top Layer:

1) Percent passing a 1-inch sieve 100 percent.

2) Percent passing No. 8 sieve0 to 5 percent.

b. Bottom Layer:

1) Percent passing a 2-inch sieve 100 percent.

2) Percent passing No. 8 sieve0 to 5 percent.

C. Sand Base:

1. Sand to be washed and of natural siliceous or igneous origin, having hard, strong, and durable particles.

2. Sand shall comply with ASTM C 33 "Specification for Concrete Aggregates", generally as follows:
   a. Percent passing 3/8 inch sieve 100 percent.
   b. Percent passing No. 4 sieve 95 to 100percent.
   c. Percent passing No. 50 sieve 10 to 30 percent.
   d. Percent passing No. 100 sieve 2 to 10 percent.

D. Vapor Retarder:
1. Vapor Retarder: Physical Requirements in accordance with ASTM E 1745 "Standard Test Methods for Water Vapor Retarders Used in Contact with Earth Under Concrete Slabs", Class A Material, are as follows:
   a. Thickness: 15 mils minimum.
   b. Permeance 0.01 Perms.
      1) Maintain permeance of less than 0.01 perms after mandatory conditioning tests per ASTM E 154 "Test Methods for Water Vapor Retarders Used in Contact with Earth Under Concrete Slabs, on Walls, or as Ground Cover", Sections 8, 11, 12, and 13.
   c. Tensile Strength 45.0 lbf/in.
      1) Per ASTM E 154 "Test Methods for Water Vapor Retarders Used in Contact with Earth Under Concrete Slabs, on Walls, or as Ground Cover", Sec. 9, ASTM D 828 "Standard Test Method for Tensile Properties of Paper and Paperboard Using Constant-Rate-of-Elongation Apparatus":
   d. Resistance to Puncture 2200 grams.
      1) ASTM E 154 "Test Methods for Water Vapor Retarders Used in Contact with Earth Under Concrete Slabs, on Walls, or as Ground Cover", Sec. 10, ASTM D 1709 "Test Methods for Impact Resistance of Plastic Film by the Free-Falling Dart Method":
   e. Resistance to decay:
      1) Per ASTM E 154 "Test Methods for Water Vapor Retarders Used in Contact with Earth Under Concrete Slabs, on Walls, or as Ground Cover".
   f. Use pressure sensitive seam tape compatible with materials to be seamed in accordance with manufacturer's written recommendations.
      1) Water vapor Transmission Rate 0.3 perms or lower.
         a) Per ASTM E 96 "Test Methods for Water Transmission of Materials".
   g. Vapor Proof Mastic 0.3 perms or lower.
      1) Water vapor Transmission Rate 0.3 perms or lower.
         a) Per ASTM E 96 "Test Methods for Water Transmission of Materials".
   h. Pipe Boots: Construct pipe boots from vapor retarder material, pressure sensitive seam tape, and /or mastic per manufacturer's written instructions.
   i. Vapor Stakes:
      1) Density 0.0289 lb/cu.in.
         a) Per ASTM D 1505 "Test Method for Density of Plastics by the Density-Gradient Technique".
      2) Specific Gravity 0.0477.
         a) Per ASTM D 792 "Test Methods for Density and Specific Gravity (Relative Density) of Plastics by Displacement".

2.3 ACCESSORIES

A. Bonding Agents: Polyvinyl acetate or acrylic base, mixed in accordance with the manufacturer's written recommendations.

B. Mortar:
1. Site Mix:
a. Composed of Concrete Materials indicated in Specification Section - CAST-IN-PLACE CONCRETE, Part 2 Article titled "MATERIALS".
1) Mix: One part cement to 3 parts aggregate (all aggregate shall pass No. 4 sieve).
2) Mixing: Thoroughly mixed in accordance with ACI 318 "Building Code Requirements for Structural Concrete and Commentary".
2. Concrete Mortar:
a. Greater than 1/4 inch thick: Floor leveling, patching and repair, non-shrink trowel applied concrete mortar where repair areas of fill.
3. Epoxy Concrete Mortar:
a. Less than 1/4 inch thick: Floor leveling, non-shrink trowel applied epoxy concrete mortar where repair areas to fill.
4. Epoxy Mortar and Adhesive Materials:
a. Modified Polyamide, high modulas mortar, strength to match adjacent concrete or greater, in accordance with ASTM C 881 "Specification for Epoxy-Resin-Base Bonding Systems for Concrete", Grade 1, Type III, Class B & C, and in accordance with ACI 503.4, mixed in accordance with the manufacturer's written recommendations.
b. Mixing: Thoroughly mixed in accordance with CBC Section 1905A.8.

C. Grout:
1. Strength to match adjacent concrete or greater, composed of Concrete Materials indicated in Specification Section - CAST-IN-PLACE CONCRETE, Part 2 Article titled "MATERIALS".
a. Mix: Same proportions as concrete mix except omit coarse aggregate and adjust water to produce a thick consistency. Provide mix design per CBC Section 1904A.2.
b. Mixing: In accordance with ACI 318 "Building Code Requirements for Structural Concrete and Commentary".
2. Non-Shrink Grout: Flowable, non-shrink, self-leveling, non-staining, non-metallic grout, strength to match adjacent concrete or greater, and in compliance with ASTM C 1107 "Specification for Packaged Dry, Hydraulic-Cement Grout (Nonshrink)":
3. Drypack Grout: Non-staining, non-shrink, non-metallic grout, strength to match adjacent concrete or greater, and in accordance with ASTM C 1107 "Specification for Packaged Dry, Hydraulic-Cement Grout (Nonshrink)", mixed in accordance with the manufacturer's written recommendation.

D. Fiber Expansion Joint Filler: 1/4" thick at vertical joints and 1/2" thick under thresholds (unless specifically noted otherwise), asphalt saturated fiber expansion joint filler, in accordance with ASTM D 1751 "Specification for Preformed Expansion Joint Filler for Concrete Paving and Structural Construction (Nonextruding and Resilient Bituminous Types".

E. Semi-Rigid Joint Filler: Two-component, semi-rigid, 100 percent solids, epoxy resin with a Type A shore durometer hardness of 80 per ASTM D 2240 “Standard Test Method for Rubber Property – Durometer Hardness”.

F. Stair Nosings:
1. Straight nosings with integral anchors and temporary protective tape.
   a. 3" wide x 1/4" thick x 1/4" nose at underside x length as required.
   b. Suitable for poured concrete and steel pan-concrete filled treads.
      1) For poured concrete, install full step length less approximate 3" clearance.
      2) For steel pan-concrete filled, install full step length (stringer to stringer) less 1/8" clearance.
   c. Color of grit strips shall be selected by the Architect from the manufacturer's standard range.
   d. Nosings shall be installed before "Initial Set" of the concrete or cement occurs.
   e. Puddle the concrete, tamp the nosings to insure proper concrete formation around the anchors.
   f. Remove the protective tape as soon as practical.

G. Curing Paper (Absorptive Covers): Products complying with:
1. ASTM C 171 "Specification for Sheet materials for Curing Concrete".

H. Slab Curing Compound (SCC): Provide liquid-type membrane-forming sealing compound, non-yellowing, VOC compliant cure and seal, complying with ASTM C 309 "Specification for Liquid Membrane-Forming Compounds for Curing Concrete", Type I, Class A, that when dry is clear in color. Moisture loss not more than 0.55 kg/sq. meter when applied at 200 sq.ft./gal.

I. Clear Floor Sealer (CFS): Provide liquid-type membrane-forming sealing compound, non-yellowing, VOC compliant cure and seal, complying with ASTM C 309 "Specification for Liquid Membrane-Forming Compounds for Curing Concrete", Type I, Class A, that when dry is clear in color. Moisture loss not more than 0.55 kg/sq. meter when applied at 200 sq.ft./gal.:

J. Clear Floor Hardener (CFH): Provide products that are ready-to-use, dry-shake type, VOC compliant clear hardeners, with surface conditioning and dispersing agents, portland cement blended with hard, graded aggregate, mixed in accordance with the manufacturer's written recommendations:

K. Colored Floor Hardener (COFH): Provide products that are ready-to-use, dry-shake type, VOC compliant colored hardeners, with surface conditioning and dispersing agents, portland cement blended with hard, graded aggregate, mixed in accordance with the manufacturer's written recommendations:

L. Sack Finish Materials: For repair and patching of defective areas.
1. Provide sack finish materials composed of Concrete Materials indicated in Specification Section - CAST-IN-PLACE CONCRETE, Part 2 Article titled "MATERIALS". Sand shall be fine.
2. Mix: One part cement to one part fine sand with enough water to provide a creamy consistency.

M. Cementitious Based Underlayment Compounds (CBUC): Provide free-flowing, self-leveling, pumpable, cement based compound for applications from 1-1/4 inch thick to feathered edges, 4500 psi minimum in accordance with ASTM C 109 "Test Method for Compressive Strength of Hydraulic Cement Mortars (Using 2-in. or [50-mm] Cube Specimens".

N. Truncated Domes:
1. General:
   a. Imprinting tools, forms and mats shall be in accordance with ADA Standards for Accessible Design, Section 4.29.2, CBC Sections 11B-705, California Government Code Section 4451(d), and IR 11B-4.
2. Cast-In-Place Replaceable Mat:
   a. Provide and install cast-in-place mat of homogeneous glass and carbon reinforced composite material, in accordance with the ADA Regulations for Detectable Warnings.
      1) Provide Integral Uniform Color throughout product.
      2) Material Physical Characteristics:
         a) Compressive Strength greater than 28,000 psi per ASTM D 695.
         b) Tensile Strength greater than 11,000 psi per ASTM D 638.
         c) Water Absorption less than 0.10 percent per ASTM D 570.
         d) Slip Resistance less than 1.00 Wet/Dry Static per ASTM C 1028.
         e) Flame Spread Index less than 25 per ASTM E 84.
      3) Dimensions: Statistics of Truncated Domes per CBC 11B-705.1:
         a) Base Diameter of Dome: 0.90 to 0.92 of an inch.
         b) Top Diameter of the Dome: 0.45 to 0.47 of an inch.
         c) Height of the Dome: 0.18 to 0.22 of an inch.
         d) Center to Center Spacing of Domes in-line pattern: 2.3 to 2.4 inches.
         e) All edges of panel shall have a square edge.
         f) Size of Mats: As required per the drawings.
3. Surface Applied Mat:
   a. Provide and install surface mount mat of homogeneous glass and carbon reinforced composite material, in accordance with the ADA Regulations for Detectable Warnings.
      1) Provide Integral Uniform Color throughout product.
      2) Material Physical Characteristics:
         a) Compressive Strength greater than 28,000 psi per ASTM D 695.
         b) Tensile Strength greater than 11,600 psi per ASTM D 638.
         c) Water Absorption less than 0.07 percent per ASTM D 570.
         d) Slip Resistance less than 1.05 Wet/Dry per ASTM C 1028.
         e) Flame Spread Index less than 25 per ASTM E 84.
      3) Dimensions; Statistics of Truncated Domes per CBC 11B-705.1:
         a) Base Diameter of Dome: 0.90 to 0.92 of an inch.
         b) Top Diameter of the Dome: 0.45 to 0.47 of an inch.
         c) Height of the Dome: 0.18 to 0.22 of an inch.
         d) Center to Center Spacing of Domes in-line pattern: 2.3 to 2.4 inches.
         e) All edges of panel shall have a 1/2" beveled edge.

f) Size of Mats: As required per the drawings.

b. All traffic is prohibited until adhesive and sealant have cured.

2.4 MIXES

A. Mix Design and Proportions in accordance with ACI 318 "Building Code Requirements for Structural Concrete and Commentary":

1. Initial mix design shall be prepared for all concrete by recognizing testing laboratory (approved by Architect). In the event that additional mix designs are required due to depletion of aggregate sources, aggregate not conforming to Specifications, or at request of Contractor, these mixes shall be prepared as above.
2. Contractor shall notify the Testing Laboratory and Architect of intent to use concrete pumps to place concrete so that mix designs can be modified accordingly.
3. Mix designs with Fly Ash content greater than 15 percent of the total weight of cementitious materials shall be proportioned by ACI 318 "Building Code Requirements for Structural Concrete and Commentary".
   a. Provide 3 percent air entrainment typical, 6 percent for mixes with f'c greater than 4,000 psi when required.
4. Owner's testing laboratory shall review all mix design before submittal.
5. All concrete shall have the following minimum compressive strengths in accordance with ACI 318 "Building Code Requirements for Structural Concrete and Commentary" at 28 days and shall be proportioned within the following limits:
   a. Foundations: Use for unexposed foundation concrete except as otherwise specified:
      1) Strength: 3,000 psi at 28 days.
      2) Max. Aggregate Size: 1-1/2 inch.
      3) Max. Water/Cement Ratio: 0.50.
      4) Admixture: Water Reducing.
      5) Weight: 145 pcf.
   b. Building Slab On Grade: Use for interior building slab on grade, except as otherwise specified:
      1) Strength: 4,000 psi at 28 days.
      2) Max. Aggregate Size: 1 inch.
      3) Max. Water/Cement Ratio: 0.45.
      4) Admixture: Water Reducing + Fly Ash.
      5) Weight: 145 pcf.
   c. Structural Concrete: Use for columns, beams and walls, except as otherwise specified:
      1) Strength: 4,000 psi at 28 days.
      2) Max. Aggregate Size: 1 inch.
      3) Max. Water/Cement Ratio: 0.50.
      4) Admixture: Water Reducing.
      5) Weight: 145 pcf.
   d. Site: Use for exterior concrete slabs on grade such as walks, site work, mechanical and electrical pads and miscellaneous site items:
      1) Strength: 2,500 psi at 28 days.
      2) Max. Aggregate Size: 1 inch.
      3) Max. Water/Cement Ratio: 0.60.
      4) Admixture: Water Reducing.
      5) Weight: 145 pcf.

e. Lean mix: Used for Back Fill of over excavated trenches, encasement of all penetrations, plumbing pipe, mechanical pipe under footings (plumbing & mechanical pipes and electrical conduits):
   1) Strength: 1,500 psi at 28 days.
   2) Max. Aggregate Size: 3/8 inch.
   3) Cement Content: 5.0 sacks/yd min. as determined by mix design.
   4) Max. Water/Cement Ratio: 0.62.
   5) Admixture: None.
   6) Weight: 145 pcf.

B. Consistency of Concrete: Concrete slump, measured in accordance with ASTM C 143 "Test method for Slump of Hydraulic-Cement Concrete", shall fall within the following limits:
   1. For General concrete placement: 3 inch plus or minus 1 inch.
   2. Mixes employing the specified high range water reducer shall provide a measured slump not to exceed 7 inch +/- 1 inch after dosing, 2 inch +/- 1 inch before dosing.
   3. Concrete slump shall be taken at point of placement. Use water reducing admixtures as required, to provide a workable consistency for pump mixers. Water shall not be added in route by truck or at the jobsite without written review by the Architect.

C. Mixing:
   1. Equipment: All concrete shall be machine mixed. Provide adequate equipment and facilities for accurate measurement and control of materials.
   2. Method of Mixing to comply with ACI 318 "Building Code Requirements for Structural Concrete and Commentary":
      a. Transit Mixing: Comply with ASTM C 94 "Specification for Ready-Mixed Concrete". Ready mixed concrete shall be used throughout, except as specified below.
         1) On-Site Mixing: Use only if method of storing material, mixing of material and type of mixing equipment is approved by Architect.
         2) Approval of site mixing does not relieve Contractor of any other requirements of Specifications.
   3. Mixing Time: After mix water has been added, concrete shall be mixed not less than 1-1/2 minutes nor more than 1-1/2 hours. Concrete shall be rejected if not deposited within the time specified.
   4. Admixtures:
      a. Use automatic metering dispenser to introduce admixture into mix. Dispenser shall be recommended and calibrated by admixture manufacturer.
      b. Water Reducers may not be used in concrete slabs on grade identified with a Polished Concrete Finish - coordinate with Specification Section - POLISHED CONCRETE FINISHING.
      c. Admixtures shall be charged into mixer as a solution and shall be dispensed by an automatic dispenser or similar metering device. Powdered admixtures shall be weighed or measured by volume as recommended by manufacturer. Accuracy of measurement of any admixture shall be within plus or minus 3 percent.
      d. Two or more admixtures may be used in same concrete, provided such admixtures are added separately during batching sequence, and provided further that admixtures used in that combination retain full efficiency and have no deleterious effect on concrete or on properties of each other.
      e. All admixtures are to be approved by Architect prior to commencing this work.
   5. Re-tempering:
      a. Concrete shall be mixed only in quantities for immediate use. Concrete, which has set shall be discarded, not re-tempered.

b. Indiscriminate addition of water to increase slump is prohibited.
c. When concrete arrives at project with slump below what is suitable for placing, water may be added only if neither maximum permissible water-cement ratio nor maximum slump is exceeded.
1) Water shall be incorporated by additional mixing equal to at least half of total mixing time required.
2) Any addition of water above that permitted by limitation of water-cement ratio shall be accompanied by a quantity of cement sufficient to maintain proper water-cement ratio.
3) Such additions shall only be used if approved by the Architect.
4) In any event, with or without addition of cement, not more than 2 gallons of water per cubic yard of concrete, over that specified in the design mix, shall be added.

6. Cold Weather Batching: When temperature is below 40 degrees F, or is likely to fall below 40 degrees F during a 24 hour period after placing, provide adequate equipment for heating concrete materials.
a. No frozen materials or materials containing ice shall be used.
b. Temperatures of separate materials, including mixing water, when placed in mixer shall not exceed 100 degrees F.
c. When placed in forms, concrete shall have a temperature between 50 degrees F and 85 degrees F.

7. Hot Weather Batching: Concrete deposited in hot weather shall have a placing temperature below 85 degrees F. If necessary, ingredients shall be cooled to accomplish this.

2.5 FINISHES

A. Slab Finishes:
1. Tooled Finishes:
a. Scratch Finish: Apply scratch finish to slab surfaces to receive concrete floor topping or mortar setting beds for tile, and other bonded applied cementitous finish flooring material.
b. Float Finish: Apply float finish to slab surfaces to receive trowel finish and other finishes as specified; membranes, elastic waterproofing, elastic roofing, or sand-bed terrazzo.
c. Trowel Finish: Apply a non-slip trowel finish to surfaces to be covered with resilient flooring, thin-set ceramic or quarry tile, paint or another thin film-finish coating system
1) Sweat Trowel Finish: Apply a non-slip steel trowel ("sweat") finish (tight circular motion pattern approved by the Architect) to slab surfaces exposed to view.
d. Broom Finish: All concrete paving and concrete finishes, and exterior concrete platforms, steps, ramps and other areas requiring non-slip finishes, unless otherwise indicated, shall have a non-slip broom finish (as defined by PCA - Portland Cement Association "Design and Control of Concrete Mixtures") applied in the following manner:
1) Medium Broom Finish.
a) 1/16" reveal.
2) Rough Broom Finish.
a) 1/8" reveal.

2. Applied Finishes:
   a. Slab Curing Compound (SCC): Used as a curing compound for exterior slabs on grade with no flooring applications.
   b. Clear Floor Hardener Finish (CFH): Used to prevent "dusting", where a light degree of hardness is required to the interior slab finish.
   c. Colored Floor Hardener Finish (COFH): Used to prevent "dusting", where a medium degree of hardness is required to the interior slab finish.
3. Repair finishes (Vertical surfaces):
   a. "Sack Finish": Applied to defective surfaces mixed to the color and consistency required to match the adjacent materials in color and strength.

2.6 SOURCE QUALITY CONTROL

A. Test, Inspection:
   1. Inspection of Mix:
      a. Quality and quantity of material used shall be subject to continuous inspection by a qualified person. Sampling and testing of cement and aggregates in accordance with Title 24, Part 1, Section 4-335, and CBC Section 1705A, and Table 1705A.3.
      b. Maintain sources of material supply constantly after approval of concrete mix.

PART 3 - EXECUTION

3.1 EXAMINATION

A. Site verification of conditions:
   1. Contractor shall inspect bearing soil and report soft or loose unsuitable bearing soil to Architect.
   2. Architect will furnish Contractor with corrective measures necessary to remedy field condition.
   3. Do not pour concrete until suitable bearing surfaces are achieved.
   4. At Engineered Fill, remove soft and loose unsuitable fill and replace with concrete. Cost shall be paid by Contractor.
   5. Contractor shall inspect and identify any site conditions and/or design information that prevents the Contractor from complying with the laws, regulations and/or building codes governing ADA access compliance.

3.2 PREPARATION

A. Transportation of Concrete:
   1. Handle Concrete from mixer to place of final deposit as rapidly as practical by methods which shall prevent the separation or loss of the ingredients in accordance with ACI 304.3R "Heavyweight Concrete Measuring, Mixing, Transporting, and Placing".
   2. Do not move concrete horizontally by means of vibrators.
   3. Deposit concrete as nearly as practical at its final position in a manner which, will ensure that required quality is obtained.
   4. Chutes shall slope not less than 4 inches and not more than 6 inches per foot of horizontal run.

B. Protection:
1. At old concrete or concrete which has begun to set upon which Concrete is to be placed:
   a. Surface shall be level, cleaned of all laitance and rough with solidly embedded large aggregate exposed.
   b. Rough surface by chipping entire surface not earlier than 5 days after set, by high pressure hosing (80 pounds per square inch) 2 to 4 hours after placing or by sand blasting with coarse silica sand, roughness amplitude shall be at least 1/4 inch.
   c. Not more than 1/2 hour prior to pouring concrete, place 2 inch thick uniform layer of grout on old concrete.

C. Surface preparation:
1. Prepare all Sand Base, Rock Base, and Vapor Retarder material as applicable prior to forming footings and trenches.
2. Remove all water from excavation. Divert flow of water through drains using methods to avoid washing over freshly deposited concrete.
3. Remove hardened concrete, wood chips, shavings and other debris from interior of forms and from reinforcing steel by vacuum process.
   a. No wooden ties or blocking shall be left in concrete except where indicated for attachment of other work.
4. Forms shall have been erected, adequately braced, cleaned, sealed, lubricated if required, and bulkheaded where placing is to stop.
5. Any wood forms other than plywood shall be thoroughly water soaked before placing any concrete.
   a. The wetting of forms shall be started at least 12 hours before concreting.
6. Reinforcing steel shall have been placed, tied and supported.
7. Coordinate with Specification Section - SOIL TREATMENT before placing any concrete.
8. Embedded work of all trades shall be in place in the forms and adequately tied and braced.
9. Reinforcing steel, at the time the concrete is placed around it, shall be cleaned of scale, mill scale or other contaminants that will destroy or reduce bond.
10. Concrete surfaces to which fresh concrete is to be bonded shall be brush cleaned to remove all dust and foreign matter and to expose the aggregate, and then coated with the bonding adhesive herein specified.
11. Prior to placing concrete for any slabs on grade, the moisture content of the subgrade below the slabs shall be adjusted to at least optimum moisture.
12. No concrete shall be placed until formwork, reinforcement, and embedded items have been approved by the Architect.
    a. Clean forms of all debris and remove standing water.
    b. Thoroughly clean reinforcement and all handling equipment for mixing and transporting concrete.
    c. Concrete shall not be placed against reinforcing steel that is hot to the touch.
13. Provide runways or other approved means for wheeled equipment. Do not wheel equipment over reinforcing or formwork.

3.3 INSTALLATION

A. Placing of Rock Base, Vapor Retarderor Sand Base.
1. Rock Base:
   a. Shall occur after scarification and compaction operations.

b. Preparation of sub-grade and selection and placing of Rock Base subject to continuous inspection and supervision of Geotechnical Engineer.
c. Compact Rock Base to a density of not less than ninety-two (92) percent, but not more than ninety-five (95) percent, in accordance with Test Designation ASTM D 1557 "Test methods for Laboratory Compaction Characteristics of Soil Using Modified Effort (56,000 ft.-lb./sq.ft.)".
    1) Density of each layer of Rock Base shall be tested and verified that it meets required density of Geotechnical Engineer prior to placing any other succeeding layers.
d. Roll Rock Base under interior (and any designated exterior slabs) to smooth surface, free of large or sharp particles.
e. Conduct work to minimize inspection costs.
f. Costs of initial compaction tests shall be borne by the Owner.
    1) Contractor shall pay for all re-tests required due to failure of initial tests.

2. Vapor Retarder:
    a. Follow ASTM E1643 "Standard Practice and Procedure for Installation of Vapor Retarder used in Contact with Earth Fill Under Concrete Slabs".
    b. General:
        1) Level, tamp or roll Earth Fill or Base Material beneath the slab in thickness as indicated on the drawings. Remove all sharp objects that could puncture the Vapor Retarder.
        2) Unroll Vapor Retarder over the area where the slab is to be poured, with the longest direction parallel with the direction of the pour.
        3) Cut to size, if necessary. Vapor Retarder used shall completely cover the pour area.
        4) All joints/seams, both lateral and butt, shall be overlapped six (6) inches and taped using a compatible four (4) inch wide Pressure Sensitive Seaming Tape.
            a) Tape areas shall be free from dust, dirt and moisture to allow maximum adhesion of the pressure sensitive tape.
        5) Vapor Retarder shall overlap six (6) inches and seal to top of all footings and against any vertical walls. Provide manufacturer's written recommended sealant.
        6) Repair any damaged areas in accordance with manufacturer's written recommendations, and overlap all repairs a minimum of six (6) inches in all directions with Vapor Retarder Material, Pressure Sensitive Tape, and Vapor Proofing Mastic.
        7) Follow manufacturer's written recommendations for all Vertical Wall Applications.
    c. Penetrations:
        1) Seal all penetrations and check that all pipe, ductwork, rebar, wire penetrations and block-outs are thoroughly sealed.
        2) Single Pipe Penetrations may be sealed using pipe boot constructed from the product.
            a) Cut a piece of plastic, width - 12 inches, length - 1 and 1/2 times the circumference of the pipe with scissors; cut slits half the width of the film, and wrap the boot around the pipe; tape onto pipe and completely tape the base to the Vapor Retarder.
        3) Multiple pipe penetrations in close proximity and very small pipes may be sealed using Vapor Proofing Mastic.

a) Cut out small area around pipes; cut a patch of Vapor Retarder extending at least 6 inches past the cut out in all directions; cut X's or small circles in the patch and install over pipes; overlap at least 6 inches and tape; build up 40-60 mils of mastic, or as needed to completely fill all voids between the pipe and Vapor Retarder.

4) No penetration of the Vapor Retarder is allowed except for reinforcing steel and permanent utilities.

a) In the case that forms must be used vapor stakes should be used to hold forms in place.

b) Penetrate plastic with stake; treat stake as pipe penetration (see above "penetration" paragraphs; leave stake permanently in concrete; using a power saw, cut stake off above the seal, but below the concrete finished surface; the lower portion of the vapor stake remains in place, permanently plugging the penetration.

3. Sand base:

a. Shall occur after scarification and compaction operations.

b. Preparation of any sub-grade Engineered Fill, Rock Base sub-bases, placing of Vapor Retarder, and selection and placing of Sand Base subject to continuous inspection and supervision of Geotechnical Engineer.

c. Compact Sand Base to a density of not less than ninety-two (92) percent, but not more than ninety-five (95) percent, in accordance with Test Designation ASTM D 1557 "Test method for Laboratory Compaction Characteristics of Soil Using Modified Effort (56,000 ft-lb/sq.ft.)".

1) Density of each layer of Sand Base shall be tested and verified that it meets required density of Geotechnical Engineer prior to placing any succeeding layers.

d. Roll Sand Base under interior (and any designated exterior slabs) to smooth surface, free of large or sharp particles.

e. Conduct work to minimize inspection costs.

f. Costs of initial compaction tests shall be borne by the Owner. Contractor shall pay for all re-tests required due to failure of initial tests.

B. Joints:

1. General: Construct joints straight, horizontal, true with faces perpendicular to surface plane of concrete and free of "overhangs" or "lips"to line.

2. Construction Joints:

a. Location: as indicated or as approved by Architect .

1) Install as to least impair strength of structure, appearance of concrete and shall conform to typical details and in accordance with ACI Standards.

a) Joints between concrete and masonry shall be considered construction joints.

b. Spacing: Pour lengths shall be as follows, unless specifically noted otherwise.

1)	Foundations	100 feet maximum
2)	Walls	60 feet maximum
3)	Structural Slabs	60 feet o.c. maximum
4)	Interior Slabs on grade	30 feet o.c. maximum
5)	Exterior Slabs on grade	30 feet o.c. maximum

c. Installation:

1) Construction joints shall have level tops, vertical sides. .

2) Construction joints shall be thoroughly cleaned and roughened by removing entire surface film and exposing clean aggregate solidly embedded in mortar matrix.
3) See drawings for doweling and required keys.
4) Roughen construction joints by any of the following methods:
   a) By sandblasting joint.
   b) By thoroughly washing joint, using a high pressure hose, after concrete has taken initial set. Washing shall be done not less than 2 hours nor more than 4 hours after concrete has been poured, depending upon setting time.
   c) By chipping and wire brushing.
   d) Vertical construction joints need not be roughened
5) All decisions pertaining to adequacy of construction joint surfaces and to compliance with requirements pertaining to construction joints shall be reviewed with the Architect.
6) Just before starting new pour, horizontal and vertical joint surfaces shall be dampened (but not saturated).
7) Before placing regular concrete mix, horizontal and vertical joint surfaces shall be covered with a layer of mortar composed of cement and fine aggregate of same proportions as that used in prescribed mix, but omitting coarse aggregate.

3. Expansion Joints:
   a. Location: as indicated or as approved by Architect.
      1) Exterior slabs on grade: locate at walks, curbs, gutters, etc.
         a) Locate at each side of structure/vertical surface, curb transition opposite apron joints, end of curb returns, and back of curb when adjacent to walk.
      2) Interior slabs on grade:. Install at slab junctions with vertical surfaces, such as column pedestals, foundation walls, grade beams, and other locations, as indicated.
   b. Spacing:
      1) Exterior Slabs on grade: 30 feet o.c. maximum.
      2) Interior Slabs on grade: as indicated.
   c. Installation:
      1) Install Expansion Filler in expansion joints.
         a) Extend joint-filler strips full width and depth of joint, terminating flush with finished concrete surface unless noted otherwise.
         b) Terminate full-width joint-filler strips not less than 1/2 inch or more than 1 inch below finished concrete surface.
         c) Install joint-filler strips in lengths as long as practicable. Where more than one length is required, lace or clip sections together.
         d) "Glue" Expansion Filler to edge of previous pour.
      2) When concrete has taken initial set, the edge of concrete surface shall be rounded by tooling to top of Expansion Filler.
      3) Interrupt reinforcing at all expansion joints.
         a) Refer to Drawings for detail.
4. Control Joints (Contraction Joints):
   a. Location: as indicated or as approved by Architect.
      1) Construction and expansion joints shall be considered as control joints.
   b. Spacing:
      1) Exterior Slab on grade: 10 feet o.c. maximum

2) Interior Slab on grade: 15 feet o.c. maximum
   a) Maximum area not to exceed 275 sf
   b) Maximum length to width not to exceed 1 to 1 1/2 ratio
   c) Conform to bay spacing wherever possible (at column centerlines, half bays, third bays, etc),

c. Installation: Form weakened-plane control joints, sectioning concrete into areas as indicated.
   1) Use saw cuts 1/8 inch wide by 1/4 of slab depth, or tooled joints with rounded edges 1/8 inch wide by 1/4 of slab depth, unless specifically noted otherwise.
   2) Control joints in unexposed floor slabs may be formed by saw cuts as soon as possible after slab finishing without dislodging aggregate and with no spalling of edges on either side of the joint.
   3) Slab reinforcing need not be terminated at control joints.

C. Placing of Concrete - General:
1. All concrete shall be placed under direct observation of the Owner's Inspector.
2. Notify Owner's Inspector not less than forty-eight (48) hours prior to pouring of first concrete.
3. Place concrete in accordance with ACI 304.3R "Heavyweight Concrete Measuring, Mixing, Transporting, and Placing".
4. Do not place Concrete outside of regular working hours except to complete work already started.
5. Do not use Concrete which has been mixed for a period longer than one and one-half (1-1/2) hours or which has started to stiffen or set.
6. Re-mixing on concrete, which has started to set, shall not be permitted.
7. Pouring of concrete shall be a continuous operation until the completion of the Section or Panel in accordance with ACI 304.3R "Heavyweight Concrete Measuring, Mixing, Transporting, and Placing".
8. Consolidation:
   a. Concrete shall be thoroughly compacted and worked to all points with solid continuous contact to forms and reinforcement to eliminate air pockets and honeycombing.
   b. Power vibrators shall be used immediately following pour.
   c. Spading by hand, hammering of forms or other combination of methods will be allowed only where permitted by Architect.
   d. In no case shall vibrators be placed against reinforcing steel or used for extensive shifting of deposited fresh concrete.
   e. Provide and maintain standby vibrators, ready for immediate use.
9. Keep a record of times, dates and locations of all concrete placing operations for the duration of the project. Record shall be available to Architect and Owner's Inspector at all times.
10. In no case shall concrete be poured into an accumulation of water ahead of pour.
11. If any concrete operation, once planned, can not be completed in a continuous operation, placement shall stop at temporary bulkheads located where resulting construction joints will least impair the strength of the structure. The location of construction joints shall be as shown on the drawings, or as approved by Architect.
12. Hot Weather Concreting: Unless otherwise directed by the Architect, perform all work in accordance with ACI 305.1 "Specification for Hot Weather Concreteing" when air temperature rises above 75 degrees F and the following:

a. Mixing Water: Keep water temperature as low as necessary to provide for the required concrete temperature at time of placing. Ice may be required to provide for the design temperature.
b. Aggregate: Keep aggregate piles continuously moist by sprinkling with water.
c. Temperature of Concrete: The temperature of the concrete mix at the time it is being placed in the forms shall not exceed 85 degrees F.
1) The method employed to provide this temperature shall in no way alter or endanger the design mix or the design strength required.
2) Dampen subgrade and formwork before placing concrete.
3) Remove all excess water before placing concrete.
4) Keep concrete continuously wet when air temperature exceeds 85 degrees F for a minimum of 48 hours after placing concrete.
d. Protection: Minimize evaporation from concrete in place by providing shade and windbreaks. Maintain such protection for 14 days minimum.

13. Cold Weather Concreting: Follow recommended ACI 306R "Cold Weather Concreteing" procedures when air temperature falls below 40 degrees F, as approved by Architect.
a. Concrete placed in freezing temperature shall have a temperature of not less than 50 degrees F.
b. Maintain this temperature for at least 7 days.
c. No chemicals or salts shall be used to prevent freezing and no accelerating agents shall be used without prior approval from Architect.

D. Placing of Concrete at Footings, Walls, Columns, etc.:
1. Concrete shall be placed in layers not to exceed twenty-four (24) inches in depth, and shall be thoroughly compacted.
a. Wait forty minutes before placing next layer.
b. Re-vibrate six (6) inches into previous lift before next lift is added.
c. Locate top of lift at or below top of wall opening.
2. Use openings in forms, elephant trunks or other approved methods to prevent accumulation of concrete on forms and reinforcement above the level of pour.
a. Unconfined free falls shall not exceed five (5) feet.
3. Where placing or consolidation is restricted by close assemblage of reinforcing and/or forms use a Modified Mix Concrete with smaller aggregate and/or pour 3 inches of neat grout into form prior to regular mix.
4. Concrete shall not be flowed horizontally along forms.

E. Placing of concrete at slab on grade:
1. Slabs on grade shall not be poured until the sub-grade has been thoroughly compacted and properly prepared, complete with vapor retarder or barrier, nor until reinforcement and inserts are securely fastened in place.
a. Sub-grade above and below vapor retarder where installed resilient flooring products or rubber/vinyl-backed products are proposed to be installed shall not be moistened prior to pouring concrete.
2. No greater area shall be poured at one time than can be properly finished without checking.
3. Slabs on grade shall be laid out in a checkerboard pattern when applicable. Pour and allow alternate slabs to set.
a. Fill out balance of checkerboard pattern with subsequent pour.
4. Concrete shall be poured as dry as possible, consistent with good workmanship.
a. Water shall not be added to mix to improve workability without approval of the Architect.

5. Concrete shall be compacted by hand tamping and by mechanical vibration.
   a. After the concrete is thoroughly compacted, the surface shall be screeded off, any surface water removed an finish applied as specified.
6. The Contractor may, on approval of DSA and the Architect, use a Finish Enhancing Admixture (High Range Water Reducer) in accordance with Article Titled MATERIALS.

F. Placing of concrete by pumps:
   1. If pumps are used to place concrete, the fines (3/8" and smaller) shall not exceed 45 percent of the total volume of aggregate. Standby equipment must be provided to insure completing pours to planned cutoffs.
   2. Pumps shall handle concrete at a uniform rate without bleeding or segregation of aggregates. Concrete from end of the hose shall have a free fall not to exceed four (4) feet. Aluminum pipe shall not be used to transport pumped concrete.

G. Installation of nonshrink grout or drypack: Install under base plates immediately after erection of structural steel.
   1. General: Ram in thin layers, using a short length of ram, the free end of which shall be struck with a heavy hammer or mallet, several blows for each layer, to compact the mixture. When completed, the exposed drypack shall show slight indication of moisture.
   2. Curing: Cure with a curing compound or with moisture-retaining barrier kept wet.

3.4 APPLICATION

A. Finishes application:
   1. Screed, consolidate, and level concrete slabs prior to any Finishes.
   2. Tooled Finishes:
      a. Scratch finish:
         1) After screeding, consolidating, and leveling, roughen surface before final set with stiff brushes, brooms, or rakes.
      b. Float finish:
         1) After screeding, consolidating, and leveling concrete slabs, do not work surface until ready for floating.
         2) Begin floating, using float blades or float shoes only, when surface water has disappeared, or when concrete has stiffened sufficiently to permit operation of power-driven floats, or both.
         3) Consolidate surface with power-driven floats or by hand floating if area is small or inaccessible to power units.
         4) Finish surfaces to tolerances indicated.
         5) Cut down high spots and fill low spots.
         6) Immediately after leveling, refloat surface to a uniform, smooth, granular texture.
      c. Trowel finish:
         1) After floating, begin first trowel-finish operation using a power-driven trowel.
            a) Begin final troweling when surface produces a ringing sound as trowel is moved over surface.
            b) Consolidate concrete surface by final hand-troweling operation, free of trowel marks, uniform in texture and appearance, and finish surfaces to tolerances indicated.

c) Grind smooth any surface defects that would telegraph through applied floor covering system.

2) Where thin set ceramic or quarry tile is to be installed with thin-set mortar, apply a trowel finish as specified, then immediately follow by slightly scarifying the surface with a fine broom.

3) Apply a non-slip "Sweat Trowel" finish (tight circular motion approved by the Architect) to exterior slabs in the final troweling operation.

d. Broom finish:

1) Immediately after float finishing, slightly roughen concrete surface by brooming with fiber-bristle broom perpendicular to main traffic route for the indicated broom finish.

2) Medium Broom Finish: On all surfaces having a pitch of less than 6 percent.

3) Rough Broom Finish: On all surfaces having a pitch of more than 6 percent.

3. Truncated Dome Finishes:

a. Cast-In-Place Replaceable Truncated Domes Mat:

1) Installation: Install into freshly poured concrete per manufacturer's instructions.

a) Tamp and vibrate into freshly poured concrete to ensure that there are no voids or air pockets.

b) Field level flush to the adjacent concrete surfaces to permit proper water drainage and eliminate tripping hazards.

2) Cut and set into size and configuration as indicated.

a) Minimize any catilever effect when cutting between successive embedment ribs.

b) Top of the body shall be fully seated and flush with adjacent concrete substrate.

3) Orient domes such that the rows of inline trucated domes are parallel with the direction of the ramp.

a) When multiple mats are used, the truncated domes shall be aligned between the tactile warning surfaces and throughout the entire tactile warning surface installation.

4) Do not create voids between the underside of the tile and the concrete.

a) No walking, leaning or external forces shall be placed during and after installation and the concrete curing stage.

5) Remove protective plastic sheeting within twenty four (24) hours of installation.

6) Clean mat by method specified by manufacturer.

7) If requested, clean mats not more that four (4) days prior to date scheduled for inspection intended to establish date of substantial completion in each area of project.

8) All traffic is prohibited until adhesive and sealant have cured.

b. Surface Applied Truncated Domes Mat:

1) Installation:

a) Mechanically fasten and adhere panels to existing concrete substrate.

b) Fasteners shall be countersunk Stainless Steel with Powder Coated head to match mat color.

c) Minimum 1-1/2" penetration into existing concrete substrate.

d) Minimum 12 fasteners per panel.

e) Provide continuous urethane adhesive around perimeter and across the center of mat prior to mechanically attaching.
f) Provide continuous seal at outside perimeter of mat per manufacturers recommendations.
g) Clean excess adhesive and sealant.
h) All traffic is prohibited until adhesive and sealant have cured.

4. Applied Finishes:
   a. Slab Curing Compound Finish (SCC):
      1) Apply Clear Slab Curing Compound Sealer Finish in accordance with manufacturer's written recommendations, and in exterior areas only as indicated by the Contract Documents.
   b. Clear Floor Sealer Finish (CFS):
      1) Apply Clear Floor Sealer Finish in accordance with manufacturer's written recommendations, and in areas as indicated by the Contract Documents.
   c. Clear Floor Hardener Finish (CFH):
      1) Apply Clear Floor Hardener Finish in accordance with manufacturer's written recommendations, and in areas as indicated by the Contract Documents.
   d. Colored Floor Hardener Finish (COFH):
      1) Apply Colored Floor Hardener Finish in accordance with manufacturer's written recommendations, and in areas as indicated by the Contract Documents.
5. Repair Finishes:
   a. "Sack Finish": Use only enough water as required for handling and placing.
      1) Cut out honeycombs, rock pockets, voids over 1/4 inch in any dimension, and holes left by tie rods and bolts down to solid concrete but in no case to a depth less than one (1) inch.
         a) Make edges of cuts perpendicular to the concrete surface.
         b) Thoroughly clean, dampen with water, and brush-coat the area to be patched with a bonding agent.
         c) Place patching mortar before bonding agent has dried.
      2) For surfaces exposed to view, blend white portland cement and standard portland cement so that, when dry, patching mortar will match surrounding color.
         a) Provide test areas at inconspicuous locations to verify mixture and color match before proceeding with patching.
         b) Compact mortar in place and strike-off slightly higher than surrounding surface.

B. Concrete curing and protection:
   1. Protect freshly placed concrete from premature drying and excessive cold or hot temperatures.
      a. In hot, dry, and windy weather protect concrete from rapid moisture loss before and during finishing operations with an evaporation-control material.
      b. Apply according to manufacturer's written instructions after screeding and bull floating, but before power floating and troweling.
   2. Start initial curing as soon as free water has disappeared from concrete surface after placing and finishing. Weather permitting, keep continuously moist for not less than ten (10) days.
   3. Formed Surfaces:
      a. Wet forms immediately after pouring.

b. Keep forms and exposed surfaces wet until forms are removed.
c. Keep all surfaces wet after forms are removed for ten (10) days after placement of Concrete.

4. Concrete Slab Curing Methods:
   a. One spray coat of clear curing compound.
      1) Agitate curing compounds thoroughly by Mechanical means continuously during use and spray or brush uniformly in accordance with manufacturer's written recommendations.
      2) Not applicable for:
         a) Slabs designated for Adhesively Applied Floor Coverings.
         b) Slabs designated for Resinous Flooring on top of concrete slab.
         c) Slabs designated for Polished Concrete Finishing.
   b. Curing paper:
      1) Anchor the paper or film securely and seal all edges in such a manner as to prevent moisture escaping from concrete.
      2) Protect all exposed surfaces with "Curing Paper". Curing Paper shall be kept moist.
      3) Contractor shall be responsible for protection of finished concrete against injury by rain, cold, vibration, animal tracks, marking by visitors, vandalism, etc.
      4) Required for the following:
         a) All interior concrete slabs.

3.5 CONSTRUCTION

A. Site Tolerances:
   1. Exterior Site Improvements:
      a. Placement of all concrete shall not exceed 0.02 feet variance from designated grades.
      b. Surface variation of all concrete slabs shall not exceed 0.01 foot in 10 feet.
      c. Construction of all concrete subject to ADA access compliance, including Accessible Path of Travel, curb returns, parking stalls and unloading areas, barrier free amenities and / or other applicable site improvements shall conform to the Americans with Disabilities Act, California Title 24 and the California Building Code, regardless of any construction tolerances. Examples of minimum and maximum limits related to ADA access compliance include, but are not limited to:
         1) Accessible Path of Travel cross-slope shall not exceed 2 percent.
         2) Accessible Path of Travel longitudinal slopes shall not exceed 5 percent.
         3) Ramp longitudinal slopes shall not exceed 8.33 percent.
         4) Walks shall not have less than 48 inches in unobstructed width.
      d. Contractor shall maintain all grades and slopes through out construction and until Notice of Completion has been filed.
   2. Building Slabs:
      a. General: All surface variations of slabs shall be 1/8 inch in 10 feet. Uniformly slope slab surfaces to drains where indicated on the drawings.
         1) Polished Concrete Flooring Slabs:
            a) Flatness: SOV,: greater than FF 45, MLV,: greater than FF 30.
            b) Levelness: SOV,: greater than FL 35, MLV,: greater than FL 24.

3.6 REPAIR/RESTORATION

A. Minor Defects:
1. Minor defects in concrete shall mean any of the following:
   a. Pour joints, voids, rock pockets, tie holes, etc. where strength, and durability is not adversely affected.
   b. Shrinkage Cracks where slabs are not exposed or where appearance is not important
   c. Minor defects of pour joints, voids, rock pockets, tie holes, etc.
   d. Immediately after removing forms, inspect all concrete surfaces. Patch any pour joints, voids, rock pockets, tie holes, etc., as soon as possible, but not until the defect has been examined by the Architect.
   e. Chip away defective areas to a minimum depth of one inch, with edges perpendicular to surface. Clean area to be patched of all laitance.
   f. Coat area to be patched with Bonding Agent. Patch with Mortar mixed with Bonding Agent thoroughly compacted into place and screeded off to leave the patch slightly higher than the surrounding surface. After at least one hour finish patch to match the adjoining surface. Cure patch by application of curing compound or by wetting for seven (7) days.
   g. Fill tie holes solid with mortar after cleaning and thoroughly wetting. Fill through holes by means of a plunger-type grease gun. See Specification Section - CONCRETE FORMWORK, Part 3 Article titled "INSTALLATION", and the paragraph titled "Indentations" for exception.
   h. Remove fins and rough surfaces from all exposed concrete.
2. Minor defect of shrinkage cracks:
   a. After entire slab is finished and fully cured, shrinkage cracks larger than 1/32 inch wide shall be filled with cement grout and struck off level with surface.

B. Serious Defects:
1. Serious defects in concrete shall mean any of the following:
   a. Concrete not meeting 100 percent of the specified 28 day compressive strength.
   b. Concrete exhibiting rock pockets, voids, spalls, streaks, cracks, exposed reinforcing to extent that strength, durability, or appearance is adversely affected.
   c. Concrete significantly out of place, line or level.
   d. Concrete not containing the required embedded items.
   e. Shrinkage Cracks where slabs are exposed and appearance is important.
   f. Concrete where patching does not satisfactorily restore quality and appearance of surface.
2. Upon determination that concrete strength is defective:
   a. Should cylinder tests fall below minimum strength specified, concrete mix for remainder of work shall be adjusted to produce required strength. Core samples shall be taken and tested from cast-in-place concrete where cylinders and samples indicate inferior concrete with less than minimum specified strength.
   b. Cores of hardened concrete shall be taken and tested in accordance with ASTM C 39 "Test method for Compressive Strength of Cylindrical Concrete Specimens" and ASTM C 42 "Test method for Obtaining and Testing Drilled Cores and Sawed Beams of Concrete". Number and location of such cores shall be subject to the approval of Architect.
   c. Cost of core sampling and testing will be paid for by the Contractor.

d. "500 psi" and "85 percent" reduction in ACI 318 "Building Code requirements for Structural Concrete and Commentary", Section 5.6.5.4 will not justify low cylinder tests.
e. If core tests indicate that concrete is below the strength specified, the concrete shall be deemed defective, and shall be removed and replaced without additional cost to the Owner.

3. Major defect of shrinkage cracks.
   a. After entire slab is finished and fully cured, unsightly shrinkage cracks shall be repaired in a manner satisfactory in appearance to the Architect. If this cannot be accomplished, concrete shall be considered defective.
4. Upon determining that concrete surface is defective:
   a. Contractor may restore concrete to acceptable condition by cutting, chipping, pointing, patching, grinding, if this can be done without significantly altering strength of structure.
   b. Permission to patch defective areas will not be considered a waiver of the right to require removal if patching does not, in the opinion of the Architect, satisfactorily restore quality and appearance.
   c. If patching does not restore concrete to specified quality and appearance, the concrete shall be deemed defective, and shall be removed and replaced without additional cost to the Owner.
   d. No repair work shall begin until concrete has been examined and procedures have been reviewed by the Architect and Structural Engineer and approved by DSA .
5. Repair defects by complete removal of concrete and replacement or repair defects with Shotcrete in accordance with CBC Sections 1913A, strength to match mix design and material being repaired.
6. Place and cure Shotcrete in accordance with CBC Section 1913A.
7. Inspect and test Shotcrete as per CBC Section 1705A.4, Table 1705A.4.

C. Cost of repairing shall be borne by the Contractor.

3.7 FIELD QUALITY CONTROL

A. Contractor's Field Quality Control:
   1. Contractor shall protect slabs receiving flooring products from excess moisture after the curing process, removing excess moisture after rains, broken water pipes, etc., to ensure that the monolithic slabs are dry enough for application of flooring products. When all spaces have been enclosed, acclimate the building as soon as possible with the building's own mechanical heating and cooling system, and other outside devices as required to properly prepare the monolithic slabs for flooring installation.
      a. The test sites for the RH Tests shall be at the same room temperature and humidity expected during normal use. If this is not possible, then the test site conditions should be 75 degrees F (plus or minus 10 degrees F) and 50 percent relative humidity (plus or minus 10 percent relative humidity) 48 hours prior to, and during testing.
   2. Contractor shall maintain temperature and humidity in a manner not deleterious to the flooring materials installed until the Owner assumes occupancy.

B. Site Tests:
   1. Compression Tests:

a. Testing Agent will make a set of four (4) concrete compression cylinders from for every 2,000 sq ft of surface area for slabs and walls, or thereof, placed each day, and cure and test concrete compression cylinders in accordance with ASTM C 31 "Practice for Making and Curing Concrete Test Specimens in the Field", ASTM C 39 "Test method for Compressive Strength of Cylindrical Concrete Specimens", and ASTM C 172 "Practice for Sampling Freshly Mixed Concrete".
   1) From each concrete compression cylinder set, Testing Agent shall test one cylinder at age seven (7) days, test two cylinders at age twenty-eight (28) days per ACI 318 "Building Code requirements for Structural Concrete and Commentary", Section, 5.6.2.4 and hold one cylinder for test only if directed by the Architect.
   2) Cylinders shall be identified as to area from which they were taken and show the date and time of day they were prepared.

b. Testing Agent shall also test Grout and Mortar as required for compliance to Compression Requirements specified.

C. Inspection:
   1. Project Inspector shall inspect placement of concrete and grout.

D. Manufacturer's Field Services:
   1. Contractor shall notify Vapor Retarder manufacturer at least one week prior to the Pre-Construction Conference regarding the Vapor Retarder installation, and will schedule subsequent visits at the appropriate times with at least one week's notice to ensure proper installation of the Vapor Retarder in accordance with the Manufacturer's Written Instructions.
   2. Manufacturer shall provide and written Inspection and installation certification to the Architect that full compliance with the manufacturer's written instructions were followed and adhered to prior to covering with concrete.

3.8 CLEANING

A. The top of all concrete foundations receiving concrete masonry units shall be washed free of all laitance and loose concrete, and roughened to a roughness amplitude of 1/4".

B. Remove all debris, excess materials, tools, and equipment resulting from or used in this operation at completion of work.

END OF SECTION

INTENTIONALLY LEFT BLANK

SECTION 033500 – POLISHED CONCRETE FINISHING

PART 1 - GENERAL

1.1 SUMMARY

A. This Section includes the following:
   1. Provide all material, labor, equipment and services necessary to completely provide polished concrete finishing materials, accessories and other related items necessary to complete the Project as indicated by the Contract Documents.

B. Related Sections: The following Project Manual Sections contain requirements that relate to this section:
   1. ALL DIVISION 00 SPECIFICATION SECTIONS.
   2. ALL DIVISION 01 SPECIFICATION SECTIONS.
   3. 03 11 01 CONCRETE FORMWORK
   4. 03 30 00 CAST-IN-PLACE CONCRETE
   5. 07 92 00 SEALANTS
   6. 09 65 10 RESILIENT BASE AND ACCESSORIES
   7. 09 68 40 CARPET
   8. ALL SPECIFICATION SECTIONS IN THE FACILITY SERVICES SUBGROUP.
   9. ALL SPECIFICATION SECTIONS IN THE SITE AND INFRASTRUCTURE SUBGROUP.

1.2 REFERENCES

A. Standards:
   1. In accordance with the following standards:
      a. ACI American Concrete Institute.
         1) ACI 302.1R "Guide for Concrete Floor and Slab Construction".
      b. ASTM American Society of Testing Materials.
      c. NFSI National Floor Safety Institute.
         1) NFSI Test Method 101-A "Standard for Evaluating High-Traction Flooring Materials, Coatings, and Finishes".
      d. RILEM Reunion Internationale des Laboratoires D'Essais et de Recherches sur les Materiaux et les Consructions.
         1) RILEM Test Method 11.4 "Standard Measurement of Reduction of Moisture Penetration Through Horizontal Concrete Surfaces".

1.3 DEFINITIONS

A. New Concrete: Concrete poured as part of this Project. Refer to Specification Section - CAST-IN-PLACE CONCRETE.

B. Existing Concrete: Any slab existing (or poured) prior to this Project.

1.4 SYSTEM DESCRIPTION

A. Performance Requirements: It is the intention of this section and the drawings to form a guide for a complete system. Any items not specifically noted but necessary for a complete system shall be provided under this section.
   1. Fire Rating: Class "A" Fire Rated when tested in accordance with ASTM E 84 “Test Method for Surface Burning Characteristics of Building Materials”.
   2. Abrasion Resistance:
      a. ASTM C 779 “Standard Test Method for Abrasion Resistance of Horizontal Concrete Surfaces”, Method A, high resistance, no more than 0.008 inch (0.20 mm) wear in 30 minutes.
   3. Reflectivity: Increase of 35 percent as determined by standard gloss meter.
      a. ASTM E 430, "Standard Test Methods for measurement of Gloss or High-Gloss Surfaces by Abridged Goniophotometry".
   4. Waterproof Properties: RILEM Test Method 11.4, 70 percent or greater reduction in absorption.
   5. High Traction Rating after Polishing: NFSI 101-A, non-slip properties.
      a. Static Coefficient of Friction: For Polished Concrete Floors, all walkway surfaces shall comply with the ADA Requirements and the following minimum values as determined by testing identical products per ASTM C 1028 “Standard Test Method for Determining the Static Coefficient of Friction of Ceramic Tile and Other Like Surfaces by the Horizontal Dynamometer Pull-Meter Method”:
         1) Level Surfaces: Minimum 0.6.
         2) Ramps Minimum 0.8.

B. Design Requirements:
   1. Verify Hardened Concrete Properties:
      a. Minimum new concrete compressive strength Minimum 3,500 psi required.
      b. Floor slab to be polished is Normal Weight Concrete.
         1) That no Lightweight Aggregate Concrete is used in the mix.
         2) That no Air Entrained Concrete Admixture is used in the mix.
   2. Verify Placement Properties:
      a. That the natural concrete slump of concrete mix was between 4-1/2 inches – 5 inches.
      b. Flatness and Levelness Requirements in accordance with ASTM E 1155 “Standard test method for Determining FF (Floor Flatness) and FL (Floor Levelness) Numbers”:
         1) Flatness SOV, greater than FF 45, MLV, greater than FF 30.
         2) Levelness SOV, greater than FL 35, MLV, greater than FL 24.
   3. Verify that the finish of the concrete slab was accomplished with Hard-Steel Trowels, and that the minimum passes for the slab was at least three (3) passes, and that there were no burn marks.
      a. Finish shall comply with ACI 302.1R, Class 5 Floor.
   4. Verify that the Curing Options used for the floor slab were at least one of the following:
      a. Sheet membrane (ASTM C 171 “Specification for Sheet materials for Curing Concrete”).
         1) Polyethylene Film is NOT ALLOWED.
      b. Damp Curing Process:

1) Seven Day Cure minimum.

5. Verify that no Spray-On "Cure and Seal" curing compounds were used.

1.5 SUBMITTALS

A. Submit in accordance with Specification Section - SUBMITTAL PROCEDURES:

1. Product Data.
   a. Submit product data for specified products.
   b. Material Safety Data Sheets (MSDS).
   c. Standard Colored Concrete dyes or stains for selection by the Architect.
   d. Joint and Crack filler color range for selection by the Architect.
2. Shop Drawings.
   a. Typical layout showing the colored concrete treatment areas per color choice.
   b. Typical layout including dimensions and floor grinding schedule.
   c. Plan view of floor and joint pattern layout.
3. Quality Assurance/Control Submittals:
   a. Test Reports:
      1) Submit three (3) copies of reports.
         a) Certified test reports showing compliance with specified performance characteristics and physical properties as cited in Design Requirements article.
         b) Manufacturers Field Reports indicating that the manufacturer has read and instructed the installer of the proper procedures in regards to the Manufacturer's installation instructions prior to the start of the Polishing Operations.
         c) Manufacturers Field Reports indicating Installers compliance with Manufacturer's Installation Instructions at the end of the Polishing Operations.
   b. Certificates:
      1) Submit three (3) copies of certificates.
         a) Product certificates signed by manufacturer certifying materials comply with specified performance characteristics, criteria, and physical requirements.
         b) Letter of certification from the National Floor Safety Institute confirming the system has been tested and passed phase Two Level of certification when tested by Method 101-A.
         c) Current contractor's certificate signed by manufacturer declaring contractor as an approved installer of polishing system.
   c. Manufacturer's Written Instructions:
      1) Submit three (3) copies of manufacturer's written procedural instructions.
4. Closeout Submittals in accordance with the following:
   a. Maintenance Data in accordance with Specification Section - PROJECT CLOSEOUT.
   b. Record Documents in accordance with Specification Section - RECORD DOCUMENTS.
   c. Warranty in accordance with Specification Section - WARRANTIES.

1.6 QUALITY ASSURANCE

A. Qualifications:
1. Installer Qualifications:
a. Installer experienced in performing work of this section who has specialized in installation of work similar to that required for this project.
b. Installer trained and holding current manufacturer's certification for Polished Concrete Finish installation.
1) Compliance: Comply with manufacturer's written data, including product technical bulletins, product catalog installation instructions, product carton installation instructions and data sheets.
2) Use only manufacturer certified Polished Concrete Finishing installers.
3) Engage an experienced Installer who has successfully completed three (3) projects of similar scope and size to that indicated for this Project.
2. Manufacturer/Supplier Qualifications:
a. Firm experienced in successfully producing/supplying products similar to that indicated for this Project, with sufficient production/supply capacity to produce/supply required units without causing delay in the work.

B. Regulatory Requirements:
1. In accordance with Specification Section - REGULATORY REQUIREMENTS, and the following:
a. CARB Materials and equipment used for this Project shall comply with the current applicable regulations of the California Air Resources Board (CARB) and the Environmental Protection Agency (EPA), in the area where the project is located.

C. Mockups:
1. Mock-Up Size: One 100 ft^2 sample panel at jobsite at location as directed under conditions similar to those which will exist during actual placement.
a. Mockups shall be located in a space that is not visible to the public, such as ancillary spaces, maintenance rooms, mechanical rooms.
b. Mockup grinding grades GGL II thru III for each color and finish for the Architect to select.
c. Show:
1) Several intensities of colors for selection by Architect. More intense dye concentrations may be required to achieve color.
2) Colors immediately adjacent to show workmanship in control of pattern.
3) Partial sample of graphic at 100% scale.
4) Partial sample of pattern: filled joints, colored, scored.
2. Allow 24 hours for inspection of mock-up before proceeding with work.
3. Mock-up will be used to judge workmanship, concrete substrate preparation, operation of equipment, material application, polished concrete shine, and proposed protection methods during construction.
a. Coordinate with Specification Section – CAST-IN-PLACE CONCRETE for Integral Color applications and color selections.
4. Remove mock-up and dispose of materials when no longer required and when directed by the Architect.

D. Meetings:
1. New Concrete: Schedule prior to the concrete pour.
   a. Coordinate the work with other work being performed.
   b. Identify any potential problems that may impede planned progress and proper installation of work regarding quality of installation and warranty requirements, such as:
      1) Environmental requirements.
      2) Concrete mix requirements.
      3) Concrete curing requirements.
      4) Concrete protection requirements.
2. Pre-Installation: Schedule prior to the start of work.
   a. Coordinate the work with other work being performed.
   b. Identify any potential problems that may impede planned progress and proper installation of work regarding quality of installation and warranty requirements, such as:
      1) Environmental requirements.
      2) Scheduling and phasing of work.
      3) Coordinating with other work and personnel.
      4) Protection of adjacent surfaces.
      5) Surface preparation.
      6) Repair of defects and defective work prior to installation.
      7) Cleaning.
      8) Preparation and application of the Stains or Dyes to the floor areas in compliance with the floor coloring plan.
      9) Application of liquid hardener, densifier.
      10) Installation of polished floor finishes.
      11) Protection of finished surfaces after installation.
3. Progress: Scheduled by the Contractor during the performance of the work.
   a. Review for proper installation of work progress.
   b. Identify any installation problems and acceptable corrective measures.
   c. Identify any measures to maintain or regain project schedule if necessary.
4. Completion: Scheduled by the Contractor upon proper completion of the work.
   a. Inspect and identify any problems, which may impede issuance of warranties or guaranties.
   b. Maintaining installed work until the Final Inspection by the Architect.

1.7 DELIVERY, STORAGE, AND HANDLING

A. Packing, shipping, handling, and unloading:
1. Products shall be handled in such a manner as to assure that they are free from damage.
2. Ordering: Comply with manufacturer’s ordering instructions and lead time requirements to avoid construction delays.
3. Delivery:
   a. Deliver materials in manufacturer's original packaging with identification labels and seals intact.

B. Acceptance at Site:
1. Damaged products will not be accepted.

2. Products must be in manufacturer's original unopened containers with labels indicating brand name, product number, and grade.

C. Storage and protection:
1. Storage and Protection:
a. Store materials protected from exposure to harmful weather conditions and at temperature conditions recommended by manufacturer.
1) Store under cover in a cool place with temperatures between 40 and 90 degrees F. Protect from freezing. Don't stack packages or buckets more than three high.
b. Protect concrete slab prior to stains, dyes, and polishing:
1) Protect from petroleum stains during construction.
2) Diaper hydraulic power equipment.
3) Restrict vehicular parking.
4) Restrict use of pipe cutting machinery.
5) Restrict placement of reinforcing steel on slab.
6) Restrict use of acids or acidic detergents on slab.
7) Restrict use of adhesives on slab.
2. Waste Management and Disposal:
a. Remove from site and legally dispose of packaging materials.

1.8 PROJECT CONDITIONS

A. Environmental requirements:
1. Dust control: Perform work in a manner as to minimize the spread of dust and flying particles.
2. Rain: The work under this section shall not be started or maintained under threat of rain unless the work is not affected by the rain.
3. Comply with manufacturer's written instructions for substrate temperature and moisture content, ambient temperature and humidity, ventilation, and other conditions affecting topping performance.
4. Temporary Lighting: Provide a minimum 200W light source, placed 8 feet above floor surface, for each 425 sq ft of floor being finished.
5. Ventilation: Provide ventilation during coating evaporation stage in confined or enclosed areas in accordance with manufacturer's instructions.
6. Verify that the concrete surface meets the Design Requirements within this specification.

B. Existing Conditions:
1. Examine site and compare it with the drawings and specifications. Thoroughly investigate and verify conditions under which the work is to be performed. No allowance will be made for extra work resulting from negligence or failure to be acquainted with all available information concerning conditions necessary to estimate the difficulty or cost of the work.

1.9 SEQUENCING AND SCHEDULING

A. Sequence with Other Work: Comply with manufacturer’s written recommendations for sequencing construction operations. It is imperative that this work be done before any framing is in place upon the slab, otherwise the consistency of the finish would be compromised if done at a later date within the construction operations.
   1. Grinding:
      a. Identify the areas of existing or new slab construction, and coordinate the Grinding Grade Level required for each area.
   2. Integral Color and Polishing:
      a. Provide integral color within the concrete mix at the time of pouring the slab, then allow a minimum of 28 days (but no more than 60 days) before the polishing operations begin.
   3. Dye and Polishing:
      a. Provide dye operations in accordance with manufacturer's written instructions before the polishing operations begin.
   4. Stain and Polishing:
      a. Provide stain operations in accordance with manufacturer's written instructions before the polishing operations begin.

1.10 WARRANTY

A. Contractor's General Warranty:
   1. In accordance with Specification Section - WARRANTIES.

B. Manufacturer's Warranty:
   1. In accordance with manufacturer's written standard warranty:
      a. Warranty Period One (1) Year.

C. Installer's Warranty:
   1. In accordance with the terms of the Specification Section - WARRANTIES
      a. Warranty Period One (1) Year.

PART 2 - PRODUCTS

2.1 MANUFACTURERS

A. These products listed herein establish the size, pattern, color range and function selected by the Architect for this Project. Manufacturers that are listed as acceptable alternative manufacturers and substitutions must still comply with the requirements of this project and the products listed in order to be approved as an equivalent during the Submittal Process. If the acceptable alternative manufacturers listed or substitutions are not approved during the Submittal Process due to non-compliance with the contract documents, then the Contractor shall submit product specified.
   1. Specified Polishing Concrete Finishing product manufacturer:
      a. L & M CONSTRUCTION CHEMICALS "PermaShine System".

b. Acceptable alternative manufacturers:
   1) ADVANCED FLOOR PRODUCTS "RetroPlate 99".
   2) DAYTON SUPERIOR "Diamond Polish Floor Systems".
   3) DIAMATIC "Ultraflor".
   4) THE BOMANITE CO. “Manufacturer’s Standard”.
   5) PERFECT POLISH “Natural Wonder Floor System”.
   6) SCHOFIELD "Formular One".
   7) W.R.MEADOWS "Indurashine".

2. Specified Concrete Dye product manufacturer:
   a. L & M CONSTRUCTION CHEMICALS, INC. "Vivid Concrete Dyes".
   b. Acceptable alternative manufacturers:
      1) ADVANCED FLOOR PRODUCTS "Manufacturer’s Standard".
      2) AMERIPOLISH "Manufacturer's Standard".
      3) DIAMATIC “Manufacturer’s Standard”.
      4) DAYTON SUPERIOR "Pro Aqua Vivid Dyes".
      5) THE BOMANITE CO. "Pantene Teres Dyes".
      6) PERFECT POLISH “Manufacturer’s Standard”.
      7) SCHOFIELD "Formular One" Liquid Dye Concentrate.

3. Specified Concrete Stain product manufacturer:
   a. DAYTON SUPERIOR "Pro Patina Stains".
   b. Acceptable alternative manufacturers:
      1) ADVANCED FLOOR PRODUCTS "Manufacturer's Standard".
      2) DIAMATIC “Manufacturer’s Standard”.
      3) L & M CONSTRUCTION CHEMICALS "Manufacturer's Standard".
      4) THE BOMANITE CO. “Manufacturer’s Standard”.
      5) PERFECT POLISH “Manufacturer’s Standard”.

4. Specified Hardener / Sealer / Densifier product manufacturer:
   a. L & M CONSTRUCTION CHEMICALS, INC. "FGS Hardener Plus".
      1) Acceptable alternative product manufacturers:
         a) THE BOMANITE CO. "StabilizerPro".
         b) THE BOMANITE CO. "VitraFinish".
         c) DYAMATIC "Flor-Sil" Densifier and "Flor-Finish" Finish
         d) W.R.MEADOWS "Bellatrix" or "Liqui-Hard".

5. Specified Oil Repellent Sealer product manufacturer:
   a. L & M CONSTRUCTION CHEMICALS, INC. "Petrotex".
      1) Acceptable alternative product manufacturers:
         a) THE BOMANITE CO. "VitraFinish".

6. Specified Joint Filler product manufacturer:
   a. L & M CONSTRUCTION CHEMICALS, INC. "Joint Tite 750".
      1) Acceptable alternative product manufacturers:
         a) EUCLID. "Quick Joint 200".

7. Specified Protective Cover product manufacturer:
   a. RAM BOARD "Ram Board".
      1) Acceptable alternative product manufacturers:
         a) McTECH GROUP "EZcover".

B. Products from other manufacturers not listed must submit in accordance with Specification Section - SUBSTITUTION PROCEDURES.

2.2 MATERIALS

A. Products:
1. Integral Color: See Specification Section – CAST-IN-PLACE CONCRETE.
2. Water shall be potable.
3. Concrete Dyes:
   a. Provide fast-drying dye, packaged in premanufactured units ready for mixing with VOC Exempt Solvent, formulated for application to polished cementitious surfaces.
      1) Provide manufacturer's Standard Color Options for selection by Architect.
4. Concrete Stains:
   a. Water-Based, penetrating, reactive stains, that creates a chemical reaction within the concrete substrate, and formulated for application to polished concrete surfaces.
      1) Provide manufacturer's Standard Color Options for selection by Architect.
      2) No "Acid Etching Stains" allowed.
5. Joint Filler: Semi-rigid, 2-component, self-leveling, 100% solids, rapid curing, polyurea control joint and crack filler with Shore A 80 or higher hardness.
6. Hardener / Sealer / Densifier: Water based, odorless liquid, VOC compliant, environmentally safe chemical hardening solution leaving no surface film.
7. Oil Repellent Sealer: Ready to use, silane, siloxane and fluoropolymers blended water based solution sealer, quick drying, low-odor, oil and water repellent, VOC compliant and compatible with chemically hardened floors.

2.3 FINISHES

A. Gloss Reading Standards, in accordance with ASTM E 430, "Standard Test Methods for measurement of Gloss or High-Gloss Surfaces by Abridged Goniophotometry".
1. GL-1 (Matte) 50 grit.
   a. Gloss Reading: 2.
   b. Maximum Level of Slip Resistance (COF): 0.747.
   c. Mohs Hardness Factor Range: 4.5.
2. GL-2 (Matte) 120 grit.
   a. Gloss Reading: 4.
   b. Maximum Level of Slip Resistance (COF): 0.733.
   c. Mohs Hardness Factor Range: 5.0.
3. GL-3 (Matte) 220 grit.
   a. Gloss Reading: 7.
   b. Maximum Level of Slip Resistance (COF): 0.76.
   c. Mohs Hardness Factor Range: 5.5.
4. GL-4 (Low Sheen) 400 grit.
   a. Gloss Reading: 23-25.
   b. Maximum Level of Slip Resistance (COF): 0.803.
   c. Mohs Hardness Factor Range: 7.0.
5. GL-5 (Semi-Gloss) 800 grit.
   a. Gloss Reading: 38-42.
   b. Maximum Level of Slip Resistance (COF): 0.656.
   c. Mohs Hardness Factor Range: 7.5.
6. GL-6 (Semi-Gloss) 1800 grit.

a. Gloss Reading: 46-52.
b. Maximum Level of Slip Resistance (COF): 0.635.
c. Mohs Hardness Factor Range: 7.5.

B. Verification of Performance:
1. Ensure concrete finishing components and materials are from a single manufacturer.

PART 3 - EXECUTION

3.1 EXAMINATION

A. Site verification of conditions:
1. Prior to the execution of the work under this specification section, inspect the installed work executed under other sections of this Project Manual which, affect the execution of work under this specification section.
2. Report unacceptable conditions to the Architect. Do not begin work until unacceptable conditions have been corrected.
3. Execution of work under this specification section shall constitute acceptance of existing conditions.

3.2 PREPARATION

A. Coordination:
1. Coordinate work under this specification section with work specified under other sections to ensure proper and adequate interface of work.

B. Protection:
1. Protect all adjacent surfaces from drips, spray, air pollution of surrounding environment, and other damage from work under this specification section.

C. Surface preparation:
1. Prepare surface in accordance with manufacturer's written instructions and recommendations.
2. Clean substrates of substances (oil, grease, rolling compounds, incompatible primers, loose mill scale, etc.) which could impair bond of materials specified within this section.
3. Determine the Grind Grade level related to the depth of cut, indicating the amount of aggregate that is to be revealed during the initial grinding of the surface:
a. GGL-I - Grind Grade Level I (Cream Finish):
1) Grinding only the Portland Paste at the surface of the substrate without exposing small, medium or large aggregate.
b. GGL-II - Grind Grade Level II (Salt and Pepper Finish):
1) Exposing the fine aggregate such as sand and small aggregate within the substrate. Generally, this level of grind can be achieved within 1/16 inch of the surface.
c. GGL-III - Grind Grade Level III (Medium Aggregate):
1) Exposing more of the overall girth of the aggregate within the substrate. Generally, this level of grind can be achieved within 1/8 inch of the surface.
d. GGL-IV - Grind Grade Level IV (Large Aggregate):

1) Exposing more of the overall girth of the aggregate within the substrate. Generally, this level of grind can be achieved within 1/4 inch of the surface.

3.3 INSTALLATION

A. General:
1. In accordance with manufacturer's written instructions and recommendations unless specifically noted otherwise.
2. In accordance with approved submittals.
3. In accordance with Regulatory Requirements.
4. Provide planetary heads and orbiting machinery for a consistent and unburnished polishing effect.

B. Layout:
1. Lines shall be straight and true, except otherwise indicated.
2. In accordance with approved joints and floor pattern.

C. Assistance:
1. Application shall be in direct consultation and review of the manufacturer.

D. Floor Surface Polishing and Treatment:
1. Provide polished concrete floor treatment in entirety of slab indicated by drawings. Provide consistent finish in all contiguous areas.
2. Apply floor finish prior to installation of fixtures and accessories.
3. Dyed and Polished Concrete:
   a. Locate demarcation line between dyed surfaces and other finishes.
   b. Polish concrete to final finish level.
   c. Apply selected diluted dyes to polished concrete surface in accordance with manufacturer's written recommendations.
   d. Allow dye to dry.
   e. Remove residue with dry buffer, reapply as necessary for desired result.
   f. Score pattern lines from 1/16 inch to 1/8 inch deep between color changes.
4. Stained and Polished Concrete:
   a. Locate demarcation line between stained surfaces and other finishes.
   b. Apply first coat of selected stain to concrete surface.
   c. Allow stain to dry.
   d. Apply second or third coat of selected stain (enough coats to match selected stain) to concrete surface.
   e. Allow stain to dry.
   f. Polish concrete to final finish level.
   g. Remove residue with dry buffer, reapply as necessary for desired result.
   h. Score pattern lines from 1/16 inch to 1/8 inch deep between color changes.
5. Apply Hardener / Sealer / Densifier as follows:
   a. First coat at 250 ft^2/gal. (or per manufacturer's written recommendations).
   b. Second coat at 350 ft^2/gal. (or per manufacturer's written recommendations).
   c. Follow manufacturer’s recommendations for drying time between successive coats.
6. Apply Oil Repellent Sealer as follows:
   a. First coat per manufacturer's written recommendations.
   b. Second coat per manufacturer's written recommendations.
   c. Follow manufacturer's recommendations for drying time between successive coats.

7. "Diamond" grit-polish concrete floor surfaces with planetary/rotary power disc machine recommended by floor finish manufacturer. Sequence with coarse to fine diamond grit using dry method.
   a. Comply with manufacturer’s recommended diamond polishing grits for each sequence to achieve desired finish level. Level of sheen shall match that of approved mock-up.
   b. Expose aggregate in concrete surface only as determined by approved mock-up.
   c. All concrete surfaces shall be as uniform in appearance as possible.
8. Grind & polish perimeter and edges to match field. Hand tools and multiple passes may be required to achieve uniform finish. Visible change in finish from field finish will not be accepted.
9. Remove defects and re-polish defective areas.
10. Finish edges of floor finish adjoining other materials in a clean and sharp manner.

3.4 ADJUSTING

A. Polish to higher gloss those areas not meeting specified gloss levels per mock-up.

B. Fill joints greater than 1/8 inch deep flush to surface with color-matching material.

C. Fill cracks greater than 1/8 inch deep flush to surface with color-matching material.

3.5 CLEANING

A. Clean in accordance with Specification Section - PROJECT CLOSEOUT.
   1. Leave area free of debris.
   2. Clean any soiled surfaces immediately.
   3. Finish shall be clean and ready for the application of any additional finishes.
   4. In accordance with manufacturer's written instructions and recommendations.

3.6 PROTECTION

A. Protection from traffic:
   1. Provide final protection and maintain conditions, in a manner acceptable to manufacturer and installer, which ensures the work of this section being without damage or deterioration until the time of Substantial Completion.

END OF SECTION

SECTION 042200 – CONCRETE MASONRY UNITS

PART 1 - GENERAL

1.1 SUMMARY

A. This Section includes the following:
   1. Provide all material, labor, equipment and services necessary to completely install all Concrete Masonry Unit (CMU) materials, accessories and other related items necessary to complete the Project as indicated by the Contract Documents.
      a. Section includes liquid water-repellent admixture added to the concrete masonry units at the time of manufacture

B. Related Sections: The following Project Manual Sections contain requirements that relate to this section:
   1. ALL DIVISION 00 SPECIFICATION SECTIONS.
   2. ALL DIVISION 01 SPECIFICATION SECTIONS.
   3. 03 11 01 CONCRETE FORMWORK
   4. 03 15 14 DRILLED ANCHORS
   5. 03 20 00 REINFORCEMENT
   6. 03 30 00 CAST-IN-PLACE CONCRETE
   7. 05 12 00 STEEL AND FABRICATIONS
   8. 06 10 00 ROUGH CARPENTRY
   9. 06 41 23 MODULAR CASEWORK
   10. 07 21 00 INSULATION
   11. 07 40 00 METAL PANELS
   12. 07 51 13 BUILT-UP ROOFING
   13. 07 60 00 SHEET METAL
   14. 07 92 00 SEALANTS
   15. 08 11 00 METAL DOORS AND FRAMES
   16. 08 14 16 WOOD DOORS
   17. 09 24 00 CEMENT PLASTER
   18. 09 29 00 GYPSUM BOARD
   19. 09 30 13 TILE
   20. 09 50 00 ACOUSTICAL CEILINGS
   21. 09 65 10 RESILIENT BASE AND ACCESSORIES
   22. 09 91 00 PAINTING
   23. 10 11 00 VISUAL DISPLAY BOARDS
   24. 10 14 00 IDENTIFYING DEVICES
   25. 10 21 13 TOILET PARTITIONS
   26. 10 28 13 TOILET ACCESSORIES
   27. 10 44 00 FIRE PROTECTION SPECIALTIES
   28. 32 31 13 CHAIN LINK
   29. ALL SPECIFICATION SECTIONS IN THE FACILITY SERVICES SUBGROUP.
   30. ALL SPECIFICATION SECTIONS IN THE SITE AND INFRASTRUCTURE SUBGROUP.

1.2 REFERENCES

A. Standards:
1. In accordance with the following standards:
a. ACI American Concrete Institute
b. ASTM American Society of Testing Materials
c. CMACN Concrete Masonry Association of California and Nevada
d. NCMA National Concrete Masonry Association
1) TEK Bulletins
e. TMS The Masonry Society

1.3 DEFINITIONS

A. The following definitions occur within the CMU Industry:
1. Grout: The filler within the Cells of the Concrete Masonry Units.
2. Mortar: The joint material between the Concrete Masonry Units, both Top and Bottom and on the Ends.

1.4 SUBMITTALS

A. Submit in accordance with Specification Section - SUBMITTAL PROCEDURES:
1. Product Data: For each type of product specified.
a. Manufacturer's standard color range for selection by the Architect.
b. All data regarding Concrete Masonry Unit, type, and aggregate to be provided.
c. All data regarding mortar and grout materials, and mix designs to be provided.
d. All data regarding accessories to be provided.
2. Shop Drawings: For the following.
a. Masonry Units: Show sizes, profiles, coursing, and locations of special shapes.
b. Reinforcing Steel: Detail bending and placement of concrete masonry unit reinforcing bars.
3. Samples. For each type, texture and color selected.
a. Provide 4" x 4" x 1" nominal size Concrete Masonry samples for texture, color, finish and dimension provided on this project as examples of the major CMU Units for the project.
1) Provide other chips for all others.
b. Pigmented Mortar: Make samples using the same sand and mortar ingredients to be used on this project.
1) Label samples to indicate types and amount of pigments used.
4. Quality Assurance/Control Submittals:
a. Test Reports:
1) Concrete Masonry Units: Lineal Shrinkage and Compressive Strength per ASTM C 140 “Test Methods for Sampling and Testing Concrete Masonry Units and Related Units• and ASTM C 426 "Standard Test Method for Linear Drying Shrinkage of Concrete Masonry Units".
2) Mortar and Grout: Grout Compressive Strength and Mortar Properties per ASTM C 270 “Specification for Mortar for Unit Masonry”.
3) Masonry Core test shall be in accordance with CBC Section 2105A.
b. Certificates:

1) Concrete Masonry Unit Manufacturers Certification per ASTM C 90 “Specification for Loadbearing Concrete Masonry Units”.
2) Concrete Masonry Unit Accessory Material Suppliers Certification.
3) CMU producer shall be certified by the manufacturer of integral CMU water repellent admixture.
4) Installer Certification.
5) Contractors Certification.

5. Project Closeout Submittals:
   a. Warranty.
   b. Project Record Documents: In accordance with Specification Section – PROJECT CLOSEOUT.

1.5 QUALITY ASSURANCE

A. Qualifications:
   1. Material:
      a. Manufacturers certification that Concrete Masonry Units furnished meet or exceed the requirements of this Specification Section per ASTM C 90 “Specification for Loadbearing Concrete Masonry Units”.
   2. Suppliers certification for all grout and mortar materials (including aggregate, cement and admixtures) that items furnished meet or exceed the requirements of this Specification Section and per ASTM C 270 “Specification for Mortar for Unit Masonry and ASTM C 476 “Specification for Grout for Masonry”.
      a. Water Permeance of Masonry: ASTM E 514, “Standard Test Method for Water Penetration and Leakage through Masonry".
      b. Compressive Strength of Masonry Prisms: ASTM C 1314, “Standard Test Method for Constructing and Testing Masonry Prisms Used to Determine Compliance with Specified Compressive Strength of Masonry.”
      c. Drying Shrinkage of CMU: ASTM C 426, “Standard Test Method for Drying Shrinkage of Concrete Masonry Units".
   3. Installer:
      a. Engage an experienced Installer who has successfully completed three (3) projects of similar scope and size to that indicated for this Project.
   4. Manufacturer/Supplier:
      a. Firm experienced in successfully producing/supplying products similar to that indicated for this Project, with sufficient production/supply capacity to produce/supply required units without causing delay in the work.
      b. Manufacturer belonging to the CMACN.

B. Regulatory Requirements:
   1. In accordance with Specification Section - REGULATORY REQUIREMENTS, and the following:
      a. CARB Materials and equipment used for this Project shall comply with the current applicable regulations of the California Air Resources Board (CARB) and the Environmental Protection Agency (EPA), in the area where the project is located.

C. Certificates:
   1. Installer's certification that Concrete Masonry Units installation meets or exceeds the requirements of this Specification Section.

2. Contractor's certification that Concrete Masonry Unit materials and installation meets or exceeds the requirements of this Specification Section.

D. Mockups:
1. Provide a four (4) foot by six (6) foot mock-up wall showing all Concrete Masonry Unit finishes in conjunction with one another, and the mortar joints and tooling required for this Project. Mock-up, once approved, will be the basis for verifying the aesthetic and structural quality of the work for this Project. Protect during construction.

E. Meetings:
1. Pre-Installation: Schedule prior to the start of work.
   a. Coordinate the work with other work being performed.
   b. Identify any potential problems, which may impede planned progress and proper installation of work regarding quality of installation and warranty requirements.
   c. Include discussions on the integral wate-repellent CMU admixture and water-repellent mortars.
2. Progress: Scheduled by the Contractor during the performance of the work.
   a. Review for proper installation of work progress and properly tooled joints.
   b. Identify any installation problems and acceptable corrective measures.
   c. Identify any measures to maintain or regain project schedule if necessary.
3. Completion: Scheduled by the Contractor upon proper completion of the work.
   a. Inspect and identify any problems, which may impede issuance of warranties or guaranties.
   b. Maintaining installed work until the Notice of Substantial Completion has been executed.

1.6 DELIVERY, STORAGE, AND HANDLING

A. Packing, Shipping, Handling, and Unloading:
1. Products shall be handled in such a manner as to assure that they are free from spalls, breakage and other damage.

B. Acceptance at Site:
1. Products must be in manufacturer's original wrapped pallets with labels indicating brand name, model, and grade.
2. Damaged products will not be accepted.

C. Storage and Protection:
1. Products shall be stored above ground on level platforms, six (6) inches above ground, allowing air circulation under stacked units.
   a. Cover materials with protective waterproof covering providing for adequate air circulation and ventilation to prevent wetting prior to use.

1.7 PROJECT CONDITIONS

A. Environmental Requirements:
1. Rain: Work under this section shall not be started or maintained under threat of rain unless the work is protected from the rain.
2. Temperature: Ambient temperature to install products shall be forty (40) degrees Fahrenheit and rising.

B. Existing Conditions:
1. Examine site and compare it with the drawings and specifications. Thoroughly investigate and verify conditions under which the work is to be performed. No allowance will be made for extra work resulting from negligence or failure to be acquainted with all available information concerning conditions necessary to estimate the difficulty or cost of the work.
2. Conduct work so as not to interfere unnecessarily with adjacent roads, streets, drives and walks.

1.8 WARRANTY

A. Contractor's General Warranty:
1. In accordance with Specification Section - WARRANTIES.

B. Manufacturer's Warranty:
1. In accordance with manufacturer's written standard warranty:
a. Warranty Period One (1) Year.

C. Installer's Warranty:
1. In accordance with the terms of the Specification Section - WARRANTIES
a. Warranty Period One (1) Year.

PART 2 - PRODUCTS

2.1 MANUFACTURERS

A. These products listed herein establish the size, pattern, color range and function selected by the Architect for this Project. Manufacturers that are listed as acceptable alternative manufacturers and substitutions must still comply with the requirements of this project and the products listed in order to be approved as an equivalent during the Submittal Process. If the acceptable alternative manufacturers listed or substitutions are not approved during the Submittal Process due to non-compliance with the contract documents, then the Contractor shall submit product specified.
1. Specified Concrete Masonry Unit product manufacturer:
a. BASALITE.
2. Specified Integral Water Repellent Admixture for CMU Production:
a. "Rheopel" as manufactured by BASF, or
b. "RainBloc" as manufactured by ACM CHEMISTRIES, or
c. "Dry-Bloc II" as manufactured by W. R. GRACE and CO.
3. Specified Pre-Blended Water Repellent Admixture for Mortar:
a. "Rheopel Plus" as manufactured by BASF, or
b. "RainBlock" as manufactured by ACM CHEMISTRIES, or
c. "Dry-Bloc Integral Water Repellent" as manufactured by W. R. GRACE and CO.
4. Specified Grout Admixture product manufacturer:
a. "Grout Aid" by SIKA.
5. Specified Joint Reinforcement, Ties and Anchors product manufacturer:
a. HOHMANN AND BARNARD, INC.

B. Products from other manufacturers not listed must submit in accordance with Specification Section - SUBSTITUTION PROCEDURES.

2.2 MATERIALS

A. Block:
1. Hollow Load Bearing Units in accordance with CBC Section 2103A.1, and ASTM C 90 "Standard Specification for Loadbearing Concrete Masonry Units", (85 - 105 pcf of concrete or greater):
a. Primary Aggregate Lightweight Expanded Shale aggregate.
1) The aggregate used for all Precision Faced Units not visible on the exterior or the interior, can be Pumice aggregate.
b. All exposed Concrete Masonry Units shall have integral color from manufacturer per material standard ASTM C 979 “Specification for Pigments for Integrally Colored Concrete”.
1) Including all colors to maximum dye content of 6 percent.
c. Maximum lineal shrinkage from saturated to over dry condition of not more than 0.065 percent.
d. Twenty-eight day compressive strength of 1,000 psi on gross area and 1,900 psi on net area.
e. Integral CMU Water-Repellent:
1) Integral liquid admixture mixed with concrete during production of CMUs.
2) Water Permeance of Masonry: Capable of achieving a Class E Rating when evaluated using ASTM E 514 “Test Method for Water Penetration and Leakage Through Masonry”.
f. Compressive Strength of Masonry Prisms: No statistically lower compressive strength of prisms shall occur as a result of adding integral water-repellent CMU and mortar admixtures when compared to a control (containing no admixtures) CMU and mortar when tested according to ASTM C 1314 “Test Method for Compressive Strength of Masonry Prisms”.
g. Drying Shrinkage of CMU: No statistically higher drying shrinkage of the CMU shall occur as a result of adding integral water-repellent CMU admixture when compared to a control (containing no admixtures) CMU when tested according to ASTM C 426 “Standard Test Method for Linear Drying Shrinkage of Concrete Masonry Units”.
2. Nominal Face Dimensions and Finishes: See drawings for locations of Concrete Masonry Unit types and sizes.
a. CMU shall be:
1) Split-Faced on both sides.
2) Split-Faced on one side and Precision-Faced on opposite side.
3) Precision-Faced on both sides.

B. Veneer Block (Face Shell):
1. Nominal Face Dimensions and Finishes: See drawings for locations of Concrete Masonry Unit types and sizes, minimum thickness of 2-5/8".
a. CMU Veneer Block shall be:
1) Precision Face Scored Veneer Unit.
2) Split-Faced Veneer Unit.
3) Precision Faced Veneer Unit.
b. Integral CMU Water-Repellent:

1) Integral liquid admixture mixed with concrete during production of CMU Veneer Block Units.
2) Water Permeance of Masonry: Capable of achieving a Class E Rating when evaluated using ASTM E 514 “Test Method for Water Penetration and Leakage Through Masonry”.

C. Joint Reinforcement, Ties and Anchors:
1. General: Comply with requirements below for basic materials, as well as requirements for each form of joint reinforcement, tie, and anchor for size and other characteristics.
2. Hot-Dip Galvanizied Steel Wire: Uncoated wire in accordance with ASTM A 82 “Specification for Steel Wire, Plain, for Concrete Reinforcement”, with zinc coating applied after prefabrication into units in accordance with ASTM A 123 “Specification for Zinc (Hot-Dip Galvanized) Coatings on Iron and Steel Products”, 1.5 oz. per sq. ft, of wire surface.
3. Joint Reinforcement: Welded-wire units prefabricated with deformed continuous side rods and plain cross rods into straight lengths of not less than 10 feet, with prefabricated corner and tee units.
   a. Width: Approximately 2 inches less than nominal width of walls and partitions, providing mortar cover of not less than 5/8 inch on joint faces exposed to exterior and 1/2 inch elsewhere.
   b. Wire Size, Side Rods: 0 gage, 0.15 inches.
   c. Wire Size, Cross Rods: 9 gage, 0.15 inches.
   d. Wire Size, Two-Piece Adjustable: 9 gage diameter in exterior walls.
   e. Single-Wythe Configuration: Truss design, continuous diagonal cross rods spaced not more than 16 inches on center.
   f. Multi-Wythe Configuration: Non-Aligned Bed Joints in Cavity or Composite masonry Walls:
      1) Adjustable wall tie pintle section fitting into eye section of rectangular box-type cross ties spaced not more than 16 inches on center.
      2) Truss type units with side rods spaced for embedment within each face shel of back-up wythe, ties extended to within 1 inch of exterior face of facing wythe.
   g. Flexible Anchors: Masonry to Structural Framework: Two-piece anchors permitting vertical or horizontal differential movement between wall and framework parallel to, but resisting tension and compression forces perpendicular to, plane of wall.
      1) Anchorage to Steel Framework: Manufacturer's standard anchors with crimped 1/4 inch diameter wire anchor section for welding to steel 3/16", triangular-shaped wire tie section szied to extend within 1 inch of exterior face of facing wythe.
   h. Unit Type Masonry Inserts in Concrete: Cast iron or malleable iron inserts of type and size indicated.
   i. Dovetail Slots: Dovetail slots with filler strips, of slot size as required; 22 gage sheet metal.
   j. Anchor Bolts: Steel bolts with hex nuts and flat washers, complying with ASTM A 307 “Specification for Carbon Steel Bolts and Standards, 60,000 PSI Tensile Strength”, Grade A, hot dip galvanized complying with ASTM A 153 “Specification for Zinc Coating (Hot Dip) on Iron and Steel Hardware”, Class C; sizes and configurations indicated.

k. Reinforcing Bars: In accordance with Specification Section - REINFORCEMENT, deformed steel, per ASTM A 615 “Specification for Deformed and Plain Carbon-Steel Bars for Concrete Reinforcement”, Grade 60 for bars No. 3 to No. 18.

4. Miscellaneous Masonry Accessories:
   a. Non-Metallic Expansion Joint Strips: Premolded, flexible cellular neoprene rubber filler strips, complying with ASTM D 1056 “Specification for Flexible Cellular Materials – Sponge or Expanded Rubber”, Grade RE41E1, capable of compression up to 35 percent; width and thickness as required.
   b. Weepholes: Pre-manufactured weeps.

D. Mortar and Grout:
1. In accordance with the following:
   a. Cement: In accordance with ASTM C 150 "Standard Specification for Portland Cement", Type II.
   b. Hydrated Lime: In accordance with ASTM C 207 "Standard Specification for Hydrated Lime for Masonry Purposes", Type [M][S][N], unless otherwise noted.
   c. Quicklime: In accordance with ASTM C 5 "Standard Specification for Quicklime for Structural Purposes".
   d. Lime Putty: Made from hydrated lime or quicklime.
      1) If made from quicklime, other than processed pulverized quicklime, slake lime and then screen through a No. 16 mesh sieve. Before using, store and protect slaked and screened lime putty for not less than 10 days.
      2) Processed pulverized quicklime shall be slaked for not less than 48 hours, and shall be cool when used.
      3) Lime putty prepared from hydrated lime may be used immediately after mixing.
      4) Lime putty prepared from quicklime or pulverized quicklime shall have a plasticity figure, after slaking and screening, or not less than 200, and shall weigh not less than 83 lbs. per cubic foot. Lime putty prepared from hydrated lime shall conform to ASTM C 207 "Standard Specification for Hydrated Lime for Masonry Purposes", Type S.
   e. Mortar Sand: In accordance with ASTM C 144 "Standard Specification for Aggregate for Masonry Mortar".
   f. Modified Mortar Sand:
      1) In accordance with ASTM C 144 "Standard Specification for Aggregate for Masonry Mortar" modified to not less than 3 percent shall pass the No. 100 sieve.
   g. Grout Aggregate: 3/8 inch maximum size and in accordance with ASTM C 404 "Standard Specification for Aggregates for Masonry Grout".
   h. Grout Admixture: SIKA "Grout Aid", Type II.
   i. Water: Clean and free of harmful amounts of acid, salts, alkalis, or organic materials.

2.3 MIXES

A. Mortar:
1. In accordance with CBC Section 2103A and ASTM C 270 “Specification for Mortar for Unit Masonry”.
2. Pre-Blended Mortar Mix:

a. In accordance with ASTM C 270 “Specification for Mortar for Unit Masonry”, Type [M][S][N].

3. Compressive Strength:
   a. See General Structural Drawings from the Structural Engineer.
   b. 1,800 psi at 28 days minimum.

B. Grout:
1. In accordance with CBC Section 2103A.11.7 and ASTM C 476 “Specification for Grout for Masonry”.
2. Pre-Blended Bag Grout:
   a. In accordance with ASTM C 476 “Specification for Grout for Masonry”.
3. Fine Grout Mix unless otherwise noted.
4. Compressive Strength:
   a. See General Structural Drawings from the Structural Engineer.
   b. 2,000 psi at 28 days minimum.

2.4 SOURCE QUALITY CONTROL

A. Fabrication Tolerances:
1. All materials, equipment and placing operations shall be subject to inspection, tests and approval at all times. Agent shall have access to all places where Concrete Masonry Unit materials are proportioned, mixed, cured and stored.

B. Tests and Inspection:
1. All tests will be performed by the Owner's Testing laboratory Agency in accordance with the Specification Section – TESTING LABORTORY SERVICES.
2. Concrete Masonry Units shall be tested per ASTM C 140 “Test Methods for Sampling and Testing Concrete Masonry Units and Related Units• and CBC Section 1705A.4.
   a. Lineal Shrinkage: In accordance with ASTM C 426 – "Standard Test method for Drying Shrinkage of Concrete Block."
   b. Compressive Strength: In accordance with ASTM C 140 – "Sampling and Testing of Concrete Masonry Units."
   c. Test three (3) samples of each type of the Concrete Masonry Unit prior to construction.
3. Mortar Tests: At the beginning of Masonry Work, at least 1 test sample each of mortar and grout shall be taken on 3 successive working days, then once per week with at least one sample taken for each 5,000 square feet of wall area, or fraction thereof.
   a. Test specimens for mortar shall be made in accordance with ASTM C 780 “Test method for Preconstruction and Construction Evaluation of Mortars for Plain and Reinforced Unit Masonry”. Test specimens shall be continuously stored in moist air until tested.
   b. Mortar shall show a compressive strength of not less than 1,800 psi at 28 days.
4. Grout Tests: At the beginning of Masonry Work, at least 1 test sample each of grout shall be taken on 3 successive working days, then once per week with at least one sample taken for each 5000 square feet of wall area, or fraction thereof.
   a. Test specimens for grout shall be made in accordance with ASTM C 476 “Specification for Grout for Masonry and CBC Section 1705A.4 Test specimens shall be continuously stored in moist air until tested.
   b. Grout shall show a compressive strength of not less than 2,000 psi at 28 days.

C. Verification of Performance:

1. A special inspector shall be employed during the placement of all units, placement of all reinforcing steel, during all grouting operations and during taking of all test specimens.
2. Reports:
   a. Special Inspector shall submit to Architect and to DSA two copies of each report showing results of tests and inspections.
   b. Report shall state that tests and inspections were made in accordance with specifications.
   c. Report shall state whether materials were in conformance with specifications.
3. Cost of testing and inspection will be paid by the Owner, unless otherwise specified. Contractor shall pay all costs of re-inspection and/or re-tests due to non-compliance with specifications as a reimbursement directly to the Owner.

PART 3 - EXECUTION

3.1 EXAMINATION

A. Site verification of conditions:
   1. Prior to the execution of the work under this specification section, inspect the installed work executed under other sections of this Project Manual which, affect the execution of work under this specification section.
   2. Report unacceptable conditions to the Architect. Do not begin work until unacceptable conditions have been corrected.
   3. Execution of work under this specification section shall constitute acceptance of existing conditions.

3.2 PREPARATION

A. Coordination:
   1. Coordinate work under this specification section with work specified under other sections to ensure proper and adequate interface of work.
      a. Installation of bolts, reinforcing, inserts, etc. as required.
      b. Check and be responsible for accuracy of dowel locations in concrete where dowels project into Concrete Masonry Unit work.
   2. Control Joints:
      a. See drawings for type and location of control joints.
   3. Bond Beams:
      a. Bond beams shall be located where shown and detailed on the drawings, and shall be reinforced as indicated and as here after specified.
   4. Built-in Work:
      a. Miscellaneous Embedded Items: All items indicated to be embedded in masonry shall be carefully located and anchored to prevent movement during grouting operations. Avoid cutting and patching.
         1) Install all anchor bolts and anchors furnished under other sections.
   5. Cutting or Patching:
      a. Obtain approval prior to cutting or fitting any area not indicated or where appearance or strength of masonry work may be impaired.

B. Protection:

1. Protect all adjacent surfaces from drips, spray, air pollution of the surrounding environment, and other damage from work under this specification section.
2. Protect and cover the top of all Concrete Masonry Unit walls at the end of each day's work to minimize water intrusion, regardless of the time of year.
   a. Continue to temporarily cover the top of the walls until the final parapet cap is installed, and the sealer coats are applied.

C. Surface Preparation:
1. Prepare surface in accordance with manufacturer's written instructions and recommendations.
2. Clean substrates of substances (oil, grease, rolling compounds, incompatible primers, loose mill scale, etc.) which could impair bond of materials specified within this section.
3. Top surfaces of foundation or slab to receive Concrete Masonry Units shall be clean, rough, and free of laitance, as specified in Specification Section - CAST-IN-PLACE CONCRETE, PART 3. Roughness amplitude shall be a minimum of one-fourth inch.

3.3 INSTALLATION

A. General:
1. In accordance with Regulatory Requirements and TMS 602.
2. Set plumb, level, and square.
3. Provide temporary bracing during erection of masonry work. Maintain in place until masonry has set to provide permanent bracing.

B. Layout:
1. Lines shall be straight, true and built accurately to dimension.
2. Masonry lines and levels shall be placed to the following tolerances:
   a. Variation from unit to adjacent unit 1/8 inch maximum.
   b. Variation from plane of wall: 1/4 inch in 10 feet.

C. Reinforcement Bar installation:
1. Installation of Vertical Reinforcement Bars:
   a. Where possible, bars shall be one length and centered in open end of Concrete Masonry Units unless noted otherwise on drawings.
   b. Bar may be doweled at top of footing.
   c. Bars shall be accurately and positively held in place before setting Concrete Masonry Units by wiring to a 2 x 6 properly braced near top of bars and not over 8 feet above foundation or at last Grout pour.
   d. For Low Lift Grout, corner bars and other bars in closed cell units shall be lapped a minimum of 48 bar diameters, unless indicated otherwise.
   e. All vertical reinforcing steel shall be braced throughout its height in a manner that will retain the steel in proper position and provide the proper clearance at spacing not to exceed 192 bar diameters.
2. Installation of Horizontal Reinforcing Bars:
   a. Bars shall be laid in bond beam units directly on top of the cross walls of block webs.
   b. Lap splice bars a minimum of 48 bar diameters, unless indicated otherwise.
   c. Reinforcing steel shall be secured to all foundation dowels and held in place at spacing not to exceed 192 bar diameters.
3. Wire horizontal and vertical bars together.

4. Reinforcing steel shall not be bent or straightened in a manner that will injure the material. Bars with kinks or bends not shown on the plans shall not be used. Heating of bars for bending will not be permitted.
5. Bars shall conform accurately to the sizes, shapes, lines and dimensions shown on drawings and with hooks and beds made as detailed. Bars shall be placed as indicated on the drawings and centered on grout space.
6. At the time grout is placed around it, reinforcing steel shall be clean of mill scale or other coatings that will destroy or reduce bond.

D. Setting of Concrete Masonry Units - In accordance with the following:
1. Bonds: Use Running Bond, or as shown on details.
   a. Place masonry to lines and levels indicated to the following tolerances:
      1) Variation from Unit to Adjacent Unit: 1/8-inch max.
      2) Variation from Plane of Wall: 1/4-inch in 10 feet.
   b. Bond: Unless noted otherwise, lay concrete masonry units in bond pattern indicated with vertical joints located over score of unit in course below (and vice versa).
   c. Maintain masonry courses to uniform width. Make vertical and horizontal joints equal and of uniform thickness.
   d. Preserve the vertical continuity of cells in concrete unit masonry. The minimum clear horizontal dimensions of vertical cores shall be 3" x 3" for 8-inch wide block.
2. Align vertical cells to maintain vertical continuity of cells to be filled. Open end or notched units may be used to facilitate installation around cells that contain vertical reinforcement. Minimum unobstructed vertical flue 3" x 3". Remove overhanging mortar or other obstructions or debris from inside of cells.
3. Provide bond beam units at cells containing horizontal reinforcement.
4. Integral Water-Repellent CMU:
   a. Installer shall use only mortar containing compatible integral liquid water-repellent mortar admixture at the manufacturer's recommended addition rate and mixed according to manufacturer's recommended instructions for construction of water repellent masonry exterior walls.
   b. Cover top of unfinished masonry work to protect it from the weather and to prevent accumulation of water in the cells of the CMU.
   c. Cleaning:
      1) Remove "primary" efflorescent from masonry walls exposed in the finished work in accordance with the manufacturer's recommendations and the NCMA TEK Bulletin #8-3A.
      2) Remove dirt or stains from masonry walls exposed in the finished work in accordance with the manufacturer's recommendations and the NCMA TEK Bulletin #8-2A.
      3) Promptly remove excess wet mortar and grout containing integral water-repellent mortar admixture from the face of the masonry as work progresses. Do not use strong acids, over-aggressive sandblasting or high-pressure cleaning methods.
      4) Comply with applicable environmental laws and restrictions.
5. Joints:
   a. Set Concrete Masonry Units in full shoveled bed of Mortar.
   b. Width of joint: 3/8 inch.
      1) Depth of joint: Equal to Face Shell Wall Thickness.
   c. Head joints shall be solidly filled.
   d. Mortar Joint Finish Method:

1) All mortar joints shall be compressed and shaped by a specific designated tool throughout the project. Provide identical tools when more than one worker is scheduled to finish joints.
2) At exposed and concealed surfaces:
   a) Vertical Joints: Compressed, Raked and Tooled joints.
   b) Horizontal Joints: Compressed, Raked and Tooled joints.
3) Provide compressed Flush Joints when other material is to be applied directly onto and over Concrete Masonry Units being covered (including areas covered by rubber base).

6. Vertical Control Joints:
   a. Space joints at 25'-4" o.c. maximum, unless specifically noted otherwise. Joints shall be spaced symmetrically and uniformly and shall be subject to the Architect's approval.
   b. All joints shall be through wall separations with horizontal reinforcing discontinuous.
   c. All joints shall be sealed with backer rods and urethane sealant on both faces. Refer to Specification Section - SEALANTS for sealant requirements.
7. Prior to grouting, the grout space shall be clean so that all spaces to be filled with grout do not contain mortar projections greater than 1/4 inch, mortar droppings and other foreign material, per CBC Section 2104A.5.
8. Do not install cracked, broken, chipped or stained masonry units.
9. Lay only dry concrete masonry units.
10. Lay masonry in full bed of mortar, properly jointed with other work. Deep or excessive furrowing of mortar joints is not permitted.
    a. Block Cap: Lay with full mortar coverage on horizontal and vertical joints.
    b. Install grout cap where and as indicated.
11. Fully bond intersections and external and internal corners.
12. Do not shift or tap masonry units after mortar has taken initial set. Where adjustments must be made, remove mortar and replace.
13. Remove excess mortar.
14. Perform job-site cutting with proper tools to provide straight unchipped edges. Take care to prevent breaking masonry unit corners or edges.
15. Step back unfinished work for joining with new work. Do not use toothing.
16. Provide cleanouts as indicated in "installation of grout".

E. Installation of Grout:
1. General:
   a. All cells shall be grouted solid.
   b. Use low lift or high lift grouting at Contractor's option.
   c. Use grout pump, hopper or bucket to place grout.
   d. Place grout in final position within 1-1/2 hours after introduction of mixing water.
   e. Place grout and rod with a 3/4 inch flexible cable vibrator sufficiently to case it to flow into all voids between the cells and around the reinforcing steel. Slushing with mortar will not be permitted.
   f. Stop grout approximately 1-1/2 inches below top of last course, except at top course bring grout to top of wall.
2. Low Lift Grouting Procedure: In accordance with CBC Section 2104A.5.1.1.1, and to be used only if approved by the Architect.
   a. Set all vertical bars.

b. Concrete Masonry Unit walls shall be built up 16 inches high uniformly around one complete building unit. No vertical construction joints will be allowed unless noted and detailed on the drawings.
c. Lay Concrete Masonry Units no higher than 24" and clean cells of mortar.
d. Set horizontal bars on bond beam unit crosswalls next to verticals.
e. If course at top of lift contains horizontal reinforcement, grout all cells to a level 3/4" below the top of the Concrete Masonry Units. This will provide about 1-1/4" grout cover over the horizontal bar. Puddle grout in place using a No. 4 bar or a 1 x 2 stick, and repeat puddling in 30 to 60 minutes.
f. Consolidate each lift twice. Once while placing grout and once more after initial absorption of water but before set.
g. Repeat steps "c.", "d.", "e." and "f." above until the wall is completed.

3. High Lift Grouting Procedure (only upon prior approval of the Architect , Structural Engineer and DSA) shall be in accordance with CBC Section 2104A.5.1.1.1.2 & IR 21-2.13:
   a. Clean-outs must be provided at the bottom of each pour for each cell.
      1) Construct clean out courses with inverted open-bottom bond beam units involved to permit cleaning of all cells by flushing. Cleanouts shall not be less than 3x4 inch openings cut from one full shell. Do not plug cleanout holes until masonry work, reinforcement and final cleaning of the grout spaces have been completed and inspected.
   b. The Contractor is cautioned that with the high lift method, the walls have very little lateral stability against winds or earthquake before grout has set and it shall be this Contractor's responsibility to adequately brace the walls until the roof sheathing is installed.
   c. "Dur-O-Wall" reinforcing shall be provided in mortar joints at all wall corners, ends, jambs of openings and wall intersections.
   d. Lay up walls subject to maximum height limitations of CBC Section 2104A.5.1.2.2 or 2104A.5.1.2.3.
   e. Construction procedure shall be as follows:
      1) Set all full length vertical bars on center line of wall, centered in cells, and braced as noted above under typical reinforcing.
      2) Lay Concrete Masonry Units full height of walls, or 12 feet maximum including wiring horizontal bars to verticals, for one complete building unit. No vertical construction joints will be allowed unless noted and detailed on the drawings.
      3) Construct clean out courses with open-bottom bond beam units inverted to permit cleaning of all cells by flushing. Cleanouts shall not be less than 3 x 4 inch openings cut from one full shell. Do not plug cleanout holes until masonry work, reinforcement and final cleaning of the grout spaces have been completed and inspected.
      4) Clean all cells and top of foundation wall of mortar by hosing cells with suitable nozzle jet or sandblasting as soon as mortar has partially set. Final cleaning shall be inspected through clean-outs at each cell in base of wall. Remove all mortar fine protruding more than 1/2 inch into the grout space by dislodging the projections with a rod as the work progress or by washing the grout space at least twice a day during erection using a high pressure stream of water.
      5) Set vertical bars in closed cells where required; i.e., at wall corners, sides of openings, etc. Wire to horizontals at top and bottom. Use metal spacers at 48" o.c. maximum to hold bars in line.

6) No grout shall be placed until mortar has set a minimum of 3 days in hot weather or 5 days in cold weather, and the top of foundation wall has been thoroughly cleaned and grout plugs have cured a minimum of 48 hours.
7) Place grout in lifts not to exceed 4 feet in height, with a waiting period between lifts, dependent on weather and absorption rate of the masonry, in order to place the succeeding lift after the preceding lift becomes plastic but prior to initial set. The first lift shall be consolidated using mechanical vibrators. After the required waiting period, place the second lift and consolidate with the vibrator, reconsolidating the lift below to a depth of 12 to 18 inches. Repeat the waiting, placing and consolidating process until the top of the grout pour is reached. Reconsolidate the top lift after the required waiting period. The high-lift grouting of any section of wall between lateral flow barriers shall be completed to the top of a pour in one working day unless a new series of clean out holes is established and the resulting horizontal construction joint cleaned.
8) Repeat items 1 - 7 until all cells are filled. The wall must be grouted to its full height during one working day. No horizontal construction joints will be allowed.
9) Above 12 feet level low lift grouting procedures shall be used.

F. Curing:
1. While Concrete Masonry Units are being laid and after, dampen both faces for a period of 3 days using a spray regulated to keep surface damp. After grouting, dampen for a period of 24 hours.

3.4 APPLICATION

A. Applied Finish:
1. Sealer (Coordinate with Specification Section – PAINTING):
a. Apply sealer to all exterior and all interior surfaces (including all concealed areas such as the backs of parapet walls and in concealed exterior and interior soffits) to minimize efflorescence, and to prevent water intrusion into the interior of buildings from the exposed exterior surfaces.
b. Apply sealer as directed by the manufacturer.
1) Coverage and installation rates shall be as per manufacturer's written recommendations.
2) Apply sealer in minimum two coats at the rates required.

3.5 REPAIR / RESTORATION

A. General:
1. Materials or Workmanship not conforming to appearance or strength specified will be deemed defective and shall be removed and replaced with no change to the contract in time or cost.
2. Remove and replace masonry units which are loose, chipped, broken, stained or otherwise damaged, or if units do not match adjoining units.
3. Pointing: During the tooling of joints, enlarge any voids or holes and completely fill with mortar.
4. Dry brush masonry surface after mortar has set, at the end of each day's work and after final pointing.

5. Leave work and surrounding surface clean and free of mortar sports and droppings.
6. Cleaning: Upon completion of masonry installation, repair all holes. Defective joints shall be cut out and rejointed. Exposed masonry surfaces shall be cleaned free of mortar, or grout stain and efflorescence.

B. Defective Mortar Or Grout:
1. Should the strength of mortar or grout fall below that specified, remainder of Work shall be adjusted to reach required strength. Work in place representing inferior grout and mortar and indicating a strength less than the minimum specified shall be tested by taking and testing core samples. Number and location of cores shall be determined by Structural Engineer.
2. Should compression tests of cores fail to meet required strength, masonry shall be deemed to be defective and shall be removed and replaced at no cost to Owner.
3. Costs relative to taking and testing of core samples shall be paid by the Owner and will be deducted from Contract Amount. Cost of patching core holes shall be borne by the Contractor.

3.6 FIELD QUALITY CONTROL

A. Site Tests:
1. Tests will be performed by the Owner's Testing Laboratory Agency in accordance with the Specification Section – TESTING LABORATORY SERVICES.
2. Mortar and Grout shall be tested per CBC Section 2105A.5.
   a. Samples shall be continuously stored in moist air until tested.
   b. Grout Compressive Strength: For each mix provided, in accordance with ASTM C 1019 "Standard Test Method for Sampling and Testing Grout".
   c. Mortar Property Specification: For each mix provided in accordance with ASTM C 780 "Standard Test method for Pre-construction and Construction Evaluation of Mortars for Plain and Reinforced Unit Masonry".
3. Masonry Core test shall be in accordance with CBC Section 2105A.
4. One set of tests for each 5,000 square feet of wall area or portion thereof.

B. Inspection:
1. Inspections will be performed by the Owner's Project Inspector in accordance with Specification Section – TESTING AND INSPECTION SERVICES.
   a. Special Project Inspector shall be employed during the placement of all units, placement of all reinforcing steel, during all grouting operations and during taking of all test specimens.
      1) Per CBC Section 1701A.5 for DSA/SSS.
2. Schedule inspections and notify the Architect, Project Inspector, Testing Agency and any other regulatory agencies of the time at least 48 hours prior to the inspection.
3. No work shall be without the required inspections.

3.7 CLEANING

A. Clean in accordance with Specification Section - PROJECT CLOSEOUT.
1. At the conclusion of the Concrete Masonry Unit work, the Contractor shall clean down all walls, remove all scaffolding and equipment, clean up all debris, refuse, any surplus materials and remove them from the premises.

2. Concrete Masonry Unit walls shall be brushed daily with a mason's soft hair brush to remove surplus mortar and splattering at scaffolding lines. This must be done immediately after initial, but before final set.
3. Grout or mortar spillage shall be removed by use of clean, plain water before it has a chance to set.
4. In areas not cleaned in accordance with the above, the Architect shall have the right to require sandblasting of the entire wall between concrete columns or piers, between control joints or entire wall unit that includes the affected areas.

B. Removal of Stains and Efflorescence:
1. Removal of Stains: In accordance with NCMA TEK Bulletin #8-2A "Removal of Stains from Concrete Masonry".
2. Removal of Efflorescence: In accordance with NCMA TEK Bulletin #8-3A "Control and Removal of Efflorescence".

3.8 PROTECTION

A. Protection from Weather:
1. Protect newly installed work from temperatures in accordance with CBC 2104A.3 and CBC 2104A.4.
   a. Cold Weather: When ambient air temperature falls below 40 degrees F.
   b. Hot Weather: When ambient air temperature rises above 100 degrees F.
2. During installation, cover the top of unfinished masonry work to protect it from the weather and to prevent accumulation of water in the cores of the masonry units.

END OF SECTION

INTENTIONALLY LEFT BLANK

SECTION 051200 – STEEL AND FABRICATIONS

PART 1 - GENERAL

1.1 SUMMARY

A. This Section includes the following:
   1. Provide all material, labor, equipment and services necessary to completely install all Steel and Fabrications, accessories and other related items necessary to complete the Project as indicated by the Contract Documents.

B. Related Sections: The following Project Manual Sections contain requirements that relate to this section:
   1. ALL DIVISION 00 SPECIFICATION SECTIONS.
   2. ALL DIVISION 01 SPECIFICATION SECTIONS.
   3. 03 11 01 CONCRETE FORMWORK
   4. 03 15 14 DRILLED ANCHORS
   5. 03 20 00 REINFORCEMENT
   6. 03 30 00 CAST-IN-PLACE CONCRETE (Grouting of Bearing Plate)
   7. 04 22 00 CONCRETE MASONRY UNITS
   8. 05 30 00 METAL DECK
   9. 06 10 00 ROUGH CARPENTRY
   10. 06 18 00 GLUE-LAMINATED CONSTRUCTION
   11. 06 41 23 MODULAR CASEWORK
   12. 07 21 00 INSULATION
   13. 07 40 00 METAL PANELS
   14. 07 60 00 SHEET METAL
   15. 07 72 00 ROOF ACCESSORIES
   16. 08 11 00 METAL DOORS AND FRAMES
   17. 08 14 16 WOOD DOORS
   18. 09 50 00 ACOUSTICAL CEILINGS
   19. 09 67 23 RESINOUS FLOORING
   20. 09 91 00 PAINTING
   21. 10 05 00 MISCELLANEOUS SPECIALTIES
   22. 10 11 00 VISUAL DISPLAY BOARDS
   23. 10 44 00 FIRE PROTECTION SPECIALTIES
   24. ALL SPECIFICATION SECTIONS IN THE FACILITY SERVICES SUBGROUP.
   25. ALL SPECIFICATION SECTIONS IN THE SITE AND INFRASTRUCTURE SUBGROUP.

1.2 REFERENCES

A. Standards:
   1. In accordance with Specification Section – REGULATORY REQUIREMENTS and the following standards:

a. AISC: American Institute of Steel Construction "Specification for Design, Fabrication and Erection of Structural Steel buildings" and "Code of Standard Practice for Steel Buildings and Bridges" and "Recommended Procedure for Identification of High Strength Steels During Fabrication".
   1) NOTE: All connections shall be designed by the Structural Engineer and approved by DSA/SSS.
   2) NOTE: Paragraph 4.2.1 of the AISC "Code of Standard Practice for Steel Buildings and Bridges" for fabricator designed connection shown on shop drawings is deleted. All connections shall be as shown in the Contract Document drawings.
   3) AISC: "Specification for Architecturally Exposed Structural Steel".
   4) AISC: "Specification for Structural Joists using A325 or A490 Bolts".
   5) AISC: “Specification for Structural Steel Buildings” using the AISC 360-05.

b. ANSI: American National Standards Institute:
   1) ANSI B18.22.1 "Plain Washers".
   2) ANSI B18.22.1 "Beveled Washers".

c. ASTM: American Society for Testing and Materials.
   1) ASTM A123: Standard Specification for Zinc (Hot-Dipped Galvanized) Coatings on Iron and Steel Products.
   2) ASTM A153: Standard Specification for Zinc (Hot-Dip) on Iron and Steel Hardware.
   3) ASTM A 385: Standard Practice for Providing High-Quality Zinc Coatings (Hot-Dip).
   4) ASTM A780: Standard Specification for Repair of Damaged and Uncoated Areas of Hot-Dip Galvanized Coatings.

d. AWS: American Welding Society "Structural Welding Code".
   1) AWS D1.1"Structural Welding Code".
   2) AWS A2.0"Welding Symbols".

e. EF: Engineering Foundation, "Specification for Structural Joints Using bolts from ASTM A 325 "Standard Specification for Structural Bolts, Steel, Heat Treated, 120/105 ksi Minimum Tensile Strength" or ASTM A 490 "Standard Specification for Heat-Treated Steel Structural Bolts, 150 ksi Minimum Tensile Strength".

f. ICC: International Code Council

g. NAAMM: National Association of Architectural Metal Manufacturers
   1) Metal Stairs Manual
   2) Pipe Rail Manual.

h. RCSC: Research Council on Structural Connections, “Specification for Structural Joints Using ASTM A 325 "Standard Specification for Structural Bolts, Steel, Heat Treated, 120/105 ksi Minimum Tensile Strength" or ASTM A 490 "Standard Specification for Heat-Treated Steel Structural Bolts, 150 ksi Minimum Tensile Strength".

i. SSPC: The Society for Protective Coatings.
   1) SSPC-SP 1 "Solvent Cleaning".
   2) SSPC-SP 2 "Hand Tool Cleaning".
   3) SSPC-SP 3 "Power Tool Cleaning".
   4) SSPC-SP 6 "Commercial Blast Cleaning".
   5) SSPC-SP 7 "Brush-Off Blast Cleaning".

1.3 DEFINITIONS

A. Welding Definitions:
1. CVN Charpy V-Notch (Testing Procedure).
2. FCAW Flux Core Arc Welding.
3. FCAW-G Flux Core Arc Welding-Gas Shielded.
4. FCAW-SS Flux Core Arc Welding-Self Shielded.
5. G-MAW Gas Metal Arc Welding.
6. SMAW Shielded Metal Arc Welding.
7. SAW Submerged Arc Welding.

1.4 SUBMITTALS

A. Submit in accordance with Specification Section - SUBMITTAL PROCEDURES:
1. Product Data.
   1) Submit Load Indicating Device information as indicated in Part 3 of this Specification Section, and include Laboratory Test Reports and other data to show compliance with Specification (include Specified Standards).
   2) Include certified copies of mill reports covering chemical and physical properties of each type of steel.
   3) Submit primer paint system. Obtain certification from the project's Painting Contractor and Paint Manufacturer that primer paint system is compatible with proposed painting systems for this project.
2. Shop Drawings.
   a. The Contract Drawings represent the spatial relationship as conceived by the Architect.
      1) The production of the structural steel Shop Drawings may require the employment and utilization of a 3-dimensional structural steel fabrication layout program to achieve the exact relationship of all intersecting members.
      2) Building sections and details represent interpretations of these relationships and the dimensions shown shall not be relied upon for accuracy and fit, but the Contractor / Structural Steel Fabricator shall verify them and double-check them for accuracy and fit.
      3) Any significant variations shall be submitted to the Architect and Structural Engineer for review and approval, of which the conditions may or may not require DSA review and approval.
      4) "Fit-Up" means and methods are the sole responsibility of the Contractor.
   b. Provide all information necessary for the fabrication of component parts. Indicate size and weight of members, type and location of shop and field connections, size and extent of all welds, and welding sequence when required.
   c. Include details of cuts, connections, camber, holes and other pertinent data. Include welds by Standard AWS Symbols, and show size, length and type of each weld.
   d. Provide sections, drawings, templates and directions for installation of anchor bolts and other anchors.

e. Dimension requirements of structural steel for manufactured items, such as Mechanical Equipment, Dock Levelers, etc. All of these items shall be coordinated and provided by the General Contractor. The General Contractor shall also coordinate and provide dimensions to locate Structural Steel for Window Washing supports such as davits, tie-backs, etc.

3. Samples.
   a. Provide material samples cut and machined for testing without charge to the Owner.
4. Quality Assurance/Control Submittals.
   a. Test Reports:
      1) Submit mill analysis and test reports for each heat, in accordance with ASTM A 6 "General Requirements for Delivery of Rolled Steel Plates, Shapes, Sheet Piling and Bars for Structural Use", certifying conformity with the Specifications. Steel shall be identifiable in the fabricating shop.
      2) Submit test reports for each lot of high strength bolts in accordance with ASTM A 325 "Standard Specification for Structural Bolts, Steel, Heat Treated, 120/105 ksi Minimum Tensile Strength" and ASTM A 490 "Standard Specification for Heat-Treated Steel Structural Bolts, 150 ksi Minimum Tensile Strength" .
      3) Submit Welding Procedure Specification (WPS) to the Structural Engineer for review prior to use.
         a) For WPS's that have been qualified by test, the supporting Procedure Qualification Record (PQR) shall be submitted to the Structural Engineer for review prior to use.
      4) Submit to the Structural Engineer for approval, a step by step welding sequence for the field welding of each type of connection.
      5) Submit to the Structural Engineer a quality control plan that addresses all inspection issues, including in process and final inspection that are addressed in AWS D1.1.
   b. Certificates:
      1) Submit current valid certificate issued by an independent testing agency for all welders, welding operators, and tack welders.
      2) Certification of Welder's Qualifications: Welders that will make welds in restricted access, such as, but not limited to, the bottom flange-to-column welds through a cope hole or access hole in the beam web, shall be qualified by the Contractor using the same welding procedure as will be used for production and a mock-up assembly that simulates the construction configuration.
      3) Provide Certified Mill Test Report Sheets in accordance with ASTM A123 “Specification for Zinc (Hot-Dip Galvanized) Coatings on Iron and Steel Products”, certified at the plant after galvanizing, but prior to shipment.
5. Closeout Submittals:
   a. Project Record Documents in accordance with Specification Section - PROJECT DOCUMENTS.
   b. Warranty.

1.5 QUALITY ASSURANCE

A. Qualifications:
   1. Installer Qualifications:

a. Engage an experienced Installer who has successfully completed three (3) projects of similar scope and size to that indicated for this Project.
b. Welders shall be recently qualified by Test as prescribed in AWS "Structural Welding Code" for the type of welding to be performed.
1) All welders, welding operators, and tack welders shall be qualified with the largest diameter electrode(s) to be used on the work by test and hold a current valid certificate issued by an independent testing agency, to perform the type of welds required by the work; including the process, position, and thickness of materials used (AWS D1.1: 4.19.1).
2) In addition to meeting the requirements of AWS, welders that will make welds with restricted access, such as, but not limited to, the flange to column welds through a cope hole or access hole in the beam web, or where access to the bottom of a groove is restricted by the presence of a column flange, shall be qualified by the Contractor using the same welding procedure as will be used for production and a mock-up assembly that simulates the construction configuration.
3) All welders on the project shall be capable of understanding and following the requirements of the written WPS.
4) Each welder employed on the project shall understand all the requirements of this welding specification before welding on the project.
5) The written WPS shall be available to the welder, welding supervisor, and all inspectors.
6) Provide weld procedures for both pre-qualified welds and special welds to be submitted to the Owner's Testing laboratory and the Architect. Procedures shall be provided for both shop & field welds and shall be provided prior to commencing welding operations.

2. Manufacturer/Supplier Qualifications:
a. Structural Steel firm experienced in successfully producing/supply capacity to produce/supply required units without causing delay in the Work.
b. Provide documentation that the Hot-Dipped Galvanizer is a member in good association with the AGA (American Galvanizers Association).

B. Regulatory Requirements:
1. In accordance with Specification Section - REGULATORY REQUIREMENTS, and the following:
a. CARB Materials and equipment used for this Project shall comply with the current applicable regulations of the California Air Resources Board (CARB)and the Environmental Protection Agency (EPA), in the area where the project is located.

C. Mockups:
1. A typical mockup of welded connections shall be provided prior to shop fabrication.

1.6 DELIVERY, STORAGE, AND HANDLING

A. Product Handling:
1. Store materials to permit easy access for inspection and identification. Keep steel members off the ground using pallets, platforms, or other supports. Protect steel members and packaged materials from erosion and deterioration.

1.7 SCHEDULING

A. Schedule the Work so that there will be no excessive inspection time. At all times that an inspector is required, sufficient work shall be laid out and adequate personnel supplied so that the Inspector's time will be used to full advantage. If inspection costs become excessive because of poor shop procedure, such excess costs will be paid for by the Owner, but deducted from the Contract Price. Poor procedures will be determined upon review of Inspection and/or Testing Reports. The rate for charging the excess costs will be as follows:
   1. Minimum of three (3) certified welders are used, Owner will pay 100 percent.
   2. Only two (2) certified welders are used, Contractor will be charged 1/3 of the Inspection cost.
   3. Only one (1) certified welder is used, the Contractor will be charged 2/3 of the inspection cost.

1.8 WARRANTY

A. Contractor's General Warranty:
   1. In accordance with Specification Section - WARRANTIES.

B. Manufacturer's Warranty:
   1. In accordance with manufacturer's written standard warranty:
      a. Warranty Period One (1) Year.

C. Installer's Warranty:
   1. In accordance with the terms of the Specification Section - WARRANTIES
      a. Warranty Period One (1) Year.

PART 2 - PRODUCTS

2.1 MANUFACTURERS

A. These products listed herein establish the size, pattern, color range and function selected by the Architect for this Project. Manufacturers that are listed as acceptable alternative manufacturers and substitutions must still comply with the requirements of this project and the products listed in order to be approved as an equivalent during the Submittal Process. If the acceptable alternative manufacturers listed or substitutions are not approved during the Submittal Process due to non-compliance with the contract documents, then the Contractor shall submit product specified.
   1. Specified Plastic Steel Putty product manufacturer, or approved equivalent:
      a. DEVCON "Plastic Steel Putty A".
   2. Specified primer paint product manufacturer, or approved equivalent:
      a. GLIDDEN PROFESSIONAL.
         1) "DEVGUARD 4141".
         2) "CATHA-COAT 302H".
   3. Specified galvanized repair paint product manufacturer, or approved equivalent:
      a. AERVOE INDUSTIRES, INC.
         1) Zinc Rich Galvanize "#1141".

B. Products from other manufacturers not listed must submit in accordance with Specification Section - SUBSTITUTION PROCEDURES.

2.2 MATERIALS

A. Steel:
1. Structural Shapes, Plates, and Bars: Shall be made in accordance with "Specifications for Structural Steel", ASTM A 36 "Standard Specification for Carbon Structural Steel"; ASTM A 992 "Standard Specification for Steel for Structural Shapes for use in Building Framing" Grade 50; or ASTM A 572 "Standard Specification for High-Strength Low-Alloy Columbium-Vanadium Structural Steel" Grade 50, as noted on Drawings.
2. Pipe: Shall be Type E ("Electric-Resistance Welded") or S ("Seamless"), Grade B, in accordance with "Specifications for Welded and Seamless Steel Pipe", ASTM A 53 "Standard Specification for Pipe, Steel, Black and Hot-Dipped, Zinc-Coated, Welded and Seamless".
   a. Finish: Type E, for concealed conditions, Black, except where indicated on the drawings to be galvanized.
   b. Finish: Type S, for visually exposed conditions, Black, except where indicated on the drawings to be galvanized.
3. Structural Tubes:
   a. Cold-Formed tubing: Shall be Grade B, in accordance with ASTM A 500 "Standard Specification for Cold-Formed Welded and Seamless Carbon Steel Structural Tubing in Rounds and Shapes".
   b. Hot-Formed tubing: Shall be in accordance with ASTM A 501 "Standard Specification for Hot-Formed Welded and Seamless Carbon Steel Structural Tubing".
   c. All HSS sections (round and square) shall have their material certifications reviewed by the special inspector. The special inspector shall verify that all seam welds are fused in accordance with ASTM A 500 "Standard Specification for Cold-Formed Welded and Seamless Carbon Steel Structural Tubing in Rounds and Shapes". The special inspector shall, as a minimum, visually inspect the exterior of all seam welds.

B. Light Gage Cold Formed Shapes: In accordance with ASTM A 1011 "Standard Specification for Steel, Sheet and Strip, Hot-Rolled, Carbon, Structural, High-Strength Low-Alloy and High-Strength Low-Alloy with Improved Formability" and ASTM A 653 "Standard Specification for Steel Sheet, Zinc-Coated (Galvanized) or Zinc-Iron Alloy-Coated (Galvannealed) by the Hot-Dip Process", such as "Zee" purlins, angles bent plated, etc.

C. Plastic Steel Putty:
1. Manufacturer: DEVCON, or approved equivalent.
2. Material: Plastic Steel Putty "A".

2.3 COMPONENTS

A. Fasteners:
1. Anchor Bolts:

a. All anchor bolts cast in concrete or masonry shall be headed bolts with cut threads conforming to ASTM F 1554 "Standard Specification for Anchor Bolts, Steel, 36, 55, and 105-ksi Yield Strength" or ASTM A 36 "Standard Specification for Carbon Structural Steel" or ASTM A 572 "Standard Specification for High-Strength Low-Alloy Columbium-Vanadium Structural Steel" Grade 50 as indicated on drawings.

2. Machine Bolts:
   a. ASTM A 307 "Standard Specification for Carbon Steel Bolts and Studs, 60,000 psi Tensile Strength".
3. Direct Tension Indicators:
   a. Provide in accordance with ASTM F 959 "Standard Specification for Compressible-Washer-Type Direct Tension Indicators for Use with Structural Fasteners", type as required.
      1) Use on all bolts for ASTM A 325 "Standard Specification for Structural Bolts, Steel, Heat Treated, 120/105 ksi Minimum Tensile Strength" and ASTM A 490 "Standard Specification for Heat-Treated Steel Structural Bolts, 150 ksi Minimum Tensile Strength".
4. High Strength Bolts, Nuts and Washers: Install in accordance with requirements for ASTM A 325 "Standard Specification for Structural Bolts, Steel, Heat Treated, 120/105 ksi Minimum Tensile Strength" and ASTM A 490 "Standard Specification for Heat-Treated Steel Structural Bolts, 150 ksi Minimum Tensile Strength" slip critical and snug tight conditions as indicated on drawings. Install high strength bolts with snug tight type connections with threads included in shear plane except as otherwise noted. Install hardened washers in conformance with AISC Specifications.
   a. Bolt Specifications: Bolts shall conform to the requirements of the current edition of the Specifications of the American Society for Testing and Materials for High-Strength Bolts for Structural Steel Joints, ASTM A 325 "Standard Specification for Structural Bolts, Steel, Heat Treated, 120/105 ksi Minimum Tensile Strength", ASTM A 490 "Standard Specification for Heat-Treated Steel Structural Bolts, 150 ksi Minimum Tensile Strength" as indicated on drawings.
   b. Bolt Geometry: Bolt dimensions shall conform to the current requirements of the American National Standards Institute for Heavy Hex Structural Bolts, ANSI Standard B18.2.1. The length of bolts shall be such that the end of the bolt will be flush with or outside the face of the nut when properly installed.
   c. Provide hexagonal heads and nuts for all connections per ASTM A 563 "Standard Specification for Steel Sheet, Zinc-Coated (Galvanized) or Zinc-Iron Alloy-Coated (Galvannealed) by the Hot-Dip Process", Appendix Table X1.1.
   d. Nut Specifications: Nuts shall conform to the current chemical and mechanical requirements of the American Society for Testing and Materials Standard Specification for Carbon and Alloy Steel Nuts, ASTM A 563 "Standard Specification for Steel Sheet, Zinc-Coated (Galvanized) or Zinc-Iron Alloy-Coated (Galvannealed) by the Hot-Dip Process", Appendix Table X1.1 Provide grade A Heavy Hex nuts for ASTM A 36 threaded rods. Use grade C, Heavy Hex nuts for ASTM A 572 "Standard Specification for High-Strength Low-Alloy Columbium-Vanadium Structural Steel" Grade 50 and ASTM A 588 "Standard Specification for High-Strength Low-Alloy Structural Steel with 50 ksi (345 Mpa) Minimum Yield Point to 4-inc (100-mm) Thick" threaded rod.
   e. Washers: Flat circular washers and square or rectangular beveled washers shall conform to the current requirements of the American Society for Testing and Materials Standard Specification for Hardened Steel Washers, ASTM F 436 "Standard Specification for Hardened Steel Washers".
   f. Tension Control Fastener System:

1) LOHR, LEJEUNE, NUCOR FASTENER, CORDOVA BOLT, INC., or approved equivalent.

5. Stud-Type Shear Connectors: ASTM A 108 "Standard Specification for Steel Bars, Carbon, Cold-Finished, Standard Quality" Grade 1015 or 1020 Cold-finished carbon steel with dimensions complying with AISC Specifications.
6. Power Driven Fasteners: Tempered steel pins with special corrosive resistant plating or coating. Pins shall have guide washers to accurately control penetration. Fastening shall be accomplished by low-velocity piston-driven power activated tool. Pins and tool shall be as manufactured by Hilti Fastening Systems.
7. Filler Metal and Welding Flux in accordance with AWS D1.1-92, and AISC 360, Section A3.5, and shall meet a CVN Impact Energy of 20 ft-lbs at minus 20 Degrees F.
   a. FCAW A5.20 or A5.29 E7XT-X.
   b. G-MAW A5.18 or A5.28 E70S-X.
   c. SAW A5.17 or A5.23 E7X-EXXX.
   d. SMAW A5.1 or A5.5 E70XX Low Carbon.
8. Turnbuckles:
   a. ASTM F 1145, "Standard Specification for Turnbuckles, Swaged, Welded, Forged".
   b. The supplier shall provide turnbuckles manufactured from the same production lot.
   c. The manufacturer shall provide test reports indicating the safe load of the turnbuckles using a safety factor of 5.
   d. Turnbuckles shall be in compliance with ASTM F 606 "Standard Test Methods for Determining the Mechanical Properties of Externally and Internally Threaded Fasteners, Washers, and Rivets".

2.4 FABRICATION

A. Shop Assembly:
1. Fabricate in accordance with AISC Spec and AISC Code unless otherwise indicated on Drawings or Specifications.
   a. Mechanically curve specific Structural members as indicated on the drawings in accordance with AISC requirements and tolerances.
2. Fabricate all structural steel members and fittings.
3. Fabricate all miscellaneous metal fabrications scheduled in Part 3 of this Specification Section.
4. Architecturally Exposed Structural Steel and "Exposed to View" Metal Fabrications.
   a. At all exposed joints, continuous fill with Plastic Steel Putty. Sand smooth and uniform and ready to receive finishes.
      1) Clean all areas to have smooth seams with manufacturers recommended cleaner.
      2) Place Steel Putty and cure.

B. Shop Fabrication and Assembly: Fabricate and assemble structural assemblies in shop to greatest extent possible. Fabricate items of structural steel in accordance with the AISC Specifications and as indicated on final shop drawings. Provide camber in structural members where indicated to provide the flattest floor possible. The contractor shall coordinate member tolerances with finishes.
1. Properly mark and match-mark materials for field assembly. Fabricate for delivery sequence which will expedite erection and minimize field handling of materials.

2. Where finishing is required, complete assembly, including welding of units, before start of finishing operations. Provide finish surfaces of members exposed in final structure free of markings, burrs, and other defects.
3. Columns:
   a. All columns and beams shall adhere to Section M2.7 of the referenced "Specification for Structural Steel for Buildings" which states that completed members shall be free of twists, bends, and open joints.

C. Connections: Weld or bolt shop connections, as indicated. Bolt field connections, except where welded connections or other connections are indicated.

D. Unless noted otherwise, make holes 1/16 inches larger than the nominal bolt diameter.
   1. For anchor bolts, the hole diameter may not exceed the sizes indicated in CBC Section 2204A.2.2 , nor what is specified on the drawings.

E. Welding, Shop and Field: Weld by shielded arc method, submerged arc method, flux cored arc method, or other method approved by AWS. Perform welding in accordance with AWS Code. All welders, both manual and automatic, shall be certified in accordance with AWS "Standard Qualification Procedure" for the Work to be performed. See paragraph "welding" herein, for detailed requirements. If sizes of fillet welds are not shown on drawings, use AWS minimum weld size but not less than 3/16 inch fillet welds.

F. Bolt Holes for Other Work: Provide holes required for securing other work to structural steel framing.
   1. Provide threaded nuts welded to framing, and other specialty items as indicated to receive other work.
   2. Cut, drill or punch holes perpendicular to metal surfaces and remove all burrs. Do not flame cut holes or enlarge holes by burning. Drill holes in bearing plates.

G. AISC Group 4 and 5 shapes and built up members shall meet the requirements for joints in AISC Sections J1.7, J1.8, J2.6 and M2.2.

H. High Strength Bolts:
   1. Installation and Tightening:
      a. Handling and Storage of Fasteners: Fasteners shall be protected from dirt and moisture at the job site.
         1) Only as many fasteners as are anticipated to be installed and tightened during a work shift shall be taken from protective storage.
         2) Fasteners not used shall be returned to protected storage at the end of the shift.
         3) Fasteners shall not be cleaned of lubricant that is present in as-delivered condition.
      b. Tension Calibrator: A tension measuring device shall be required at all job sites where bolts in slip-critical joints are being installed and tightened.
         1) The tension measuring device shall be used to confirm:
            a) The suitability to satisfy the requirements of AISC for the complete fastener assembly, including lubrication if required to be used in the work,
            b) Calibration of wrenches, if applicable, and
            c) The understanding and proper use by the bolting crew of the method to be used.

2) The frequency of confirmation testing, the number of tests to be performed and the test procedure shall be as specified in 1.d. below, as applicable.
   a) The accuracy of the tension-measuring device shall be confirmed through calibration by an approved testing agency at least annually.

c. Joint Assembly and Tightening of Shear/Bearing Connections: Bolts in connections not within the slip-critical category shall be installed in properly aligned holes, but need only be tightened to the snug tight condition.
   1) The snug tight condition is defined as the tightness that exists when all plies in a joint are in firm contact.
   2) This may be attained by a few impacts of an impact wrench or the full effort of a man using an ordinary spud wrench.
   3) If a slotted hole occurs in an outer ply, a flat hardened washer or common plate washer shall be installed over the slot.

d. Joint Assembly and Tightening of Connections Requiring Full Pre-tensioning. Slip-critical connections shall be installed in properly aligned holes and tightened by one of the following methods.
   1) Turn-of-nut Tightening: When turn-of-nut tightening is used, hardened washers are not required except as specified in the AISC.
      a) A representative sample of not less than three bolts and nuts of each diameter, length and grade to be used in the work shall be checked at the start of work in a device capable of indicating bolt tension.
      b) The test shall demonstrate that the method of estimating the snug-tight condition and controlling turns from snug tight to be used by the bolting crews develops a tension not less than five percent greater than the tension required for slip-critical connections.
   2) Installation of Alternate Design Bolts: A representative sample of not less than three bolts of each diameter, length and grade shall be checked at the jot site in a device capable of indicating bolt tension.
      a) The test assembly shall include flat-hardened washers, if required in the actual connection, arranged as in the actual connections to be tensioned.
      b) The calibration test shall demonstrate that each bolt develops a tension not less than five percent greater than the tension required by AISC.
      c) Manufacturer's installation procedure shall be followed for installation of bolts in the calibration device and in all connections.
      d) When alternate design features of the fasteners involve an irreversible mechanism such as yield or twist-off of an element, bolts shall be installed in all holes of the connection and initially brought to a snug tight condition.
      e) All fasteners shall then be tightened, progressing systematically from the most rigid part of the connection to the free edges in a manner that will minimize relaxation of previously tightened fasteners prior to final twist-off or yielding of the control or indicator element of the individual fasteners.
      f) In some cases, proper tensioning of the bolts may require more than a single cycle of systematic tightening.

e. Mark bolts that have been completely tightened with an identifying symbol.
   1) Final tightening of high strength bolts in webs of beam to column moment connections shall be performed after completion of flange welding.

I. Welding – General:

1. General: Quality of materials and design and fabrication of all welded connections shall conform to AISC "Specifications for the Design, Fabrication and Erection of Structural Steel for Building", "AWS Code for Welding in Building Construction", and requirements of this section.
   a. Location and type of all welds shall be as shown. Make no other welded splices, except those shown on drawings, without prior approval of the architect.
2. Automatic Welding: Use electrode wire and flux for automatic and semi-automatic welding acceptable to Architect. All methods, sequences, qualification and procedures, including preheating, and post heating if necessary, shall be detailed in writing and submitted to the architect for review.
3. Qualification of Welders:
   a. Structural steel welding: Manual and automatic welds for structural steel construction shall be made only by operators who have been previously qualified by tests, as prescribed in AWS D1.1 to perform type of work required.
   b. Welders shall be checked by the welding inspector. Those not doing satisfactory work may be removed, and may be required to pass qualification tests again. All qualification testing shall be at the Contractor's expense.
   c. Only welders whose weld procedures and pre-qualification by testing that have passed shall be considered qualified for such welds.
4. Control cooling process after weld is completed by either step down post heat or thermal blankets as determined by procedures and prequalification.
5. Box columns and built-up members shall have ultrasonic testing before and after welding.
6. Flame cut surfaces shall be ground to remove contaminated steel layer to provide welds proper fusion without impurities.
7. Preparation of surface: Surfaces to be welded shall be free of loose scale, slag, rust, grease, paint and any other foreign material.
8. Welding equipment: Welding equipment to be used in each case shall be acceptable to welding inspector. Use equipment with suitable devices to regulate speed and manually adjust operating amperage and voltage. The amperage capacity shall be sufficient to overcome line drop, and to give adequate welding heat.
9. Remove runoff tabs and grind surfaces smooth where the tabs would interfere with fireproofing and architectural finishes.
10. End-welded studs:
    a. Automatic end-welded studs: Automatically end-weld in accordance with the manufacturer's written recommendations in such a manner as to provide complete fusion between the end of the stud and the plates. There shall be no porosity or evidence of lack of fusion between the welded end of the stud and the plate. The stud shall decrease in length during welding approximately 1/8 inch for 5/8 inch, and 3/16 inch for 3/4 inch diameter. Stud sizes indicated on drawings represent the finish stud height.
    b. Fillet-end welded studs: Studs may be welded using prequalified FCAW, GMAW, or SMAW processes provided the requirements of the AWS D1.1 Chapter 7 Section 7.5.5 are met as well as any other pertinent requirements of D1.1.
11. Provide mill camber as shown on the construction documents within AISC tolerance. Place mill tolerance upward for all beams specified no camber.

J. Railing Systems (Guard Rails, Hand Rails, Stair Rails and Queuing Rails): Assemble railing systems in shop to the greatest extent possible to minimize field splicing and assembly. Disassemble units only as necessary for shipping and handling limitations. Clearly mark units for re-assembly and coordinated installation. Use connections that maintain structural value of joined pieces.

1. Form changes in direction of railing members as follows:
   a. By bending (unless otherwise indicated by the contract documents).
2. Form simple and compound curves by bending members in jigs to produce uniform curvature for each repetitive configuration required; maintain profile of member throughout entire bend without buckling, twisting, cracking, or otherwise deforming exposed surfaces of handrail and railing components.
3. Welded Connections: Fabricate railing systems and handrails for connecting members by welding. For connections made during fabrication, weld corners and seams continuously to comply with the following:
   a. Use materials and methods that minimize distortion and develop strength and corrosion resistance of base metals.
   b. Obtain fusion without undercut or overlap.
   c. Remove welding flux immediately.
   d. At exposed connections, finish exposed welds and surfaces smooth and blended so that no roughness shows after finishing and welded surface matches contours of adjoining surfaces.
4. Brackets, Flanges, Fittings, and Anchors: Provide manufacturer's standard hand rail brackets, miscellaneous brackets, flanges, miscellaneous fittings, and anchors to connect handrail and railing members to other construction.
5. Provide inserts and other anchorage devices to connect handrails and railing systems to concrete or masonry work. Fabricate anchorage devices capable of withstanding loads imposed by handrails and railing systems. Coordinate anchorage devices with supporting structure.
6. For railing posts set in concrete, provide preset sleeves of steel not less than 6 inches long with inside dimensions not less than 1/2 inch greater than outside dimensions of post, and steel plate forming bottom closure.
7. For removable railing posts, fabricate slip-fit sockets from steel tube whose inside diameter is sized for a close fit with posts and to limit deflection of post without lateral load, measured at top, to not more than 1/12 of post height. Provide socket covers designed and fabricated to resist being dislodged.
   a. Provide chain with eye, snap hook, and staple across gaps formed by removable railing sections at locations indicated. Fabricate from same metal as railings.
8. Shear and punch metals cleanly and accurately. Remove burrs from exposed cut edges.
9. Ease exposed edges to a radius of approximately 1/32 inch, unless otherwise indicated. Form bent-metal corners to the smallest radius possible without causing grain separation or otherwise impairing work.
10. Cut, reinforce, drill, and tap components, as indicated, to receive finish hardware, screws, and similar items.
11. Provide weep holes or another means to drain entrapped water in hollow sections of railing members that are exposed to exterior or to moisture from condensation or other sources.
12. Fabricate joints that will be exposed to weather in a watertight manner.
13. Close exposed ends of handrail and railing members with prefabricated end fittings.
14. Provide wall returns at ends of wall-mounted handrails, unless otherwise indicated. Close ends of returns unless clearance between end of the railing and wall is 1/4 inch or less.

15. Toe Boards: Where indicated, provide toe boards at railings around openings and at the edge of open-sided floors and platforms. Fabricate to dimensions and details indicated.
16. Fillers: Provide steel sheet or plate fillers of thickness and size indicated or required to support structural loads of handrails where needed to transfer wall bracket loads through wall finishes to structural supports. Size fillers to suit wall finish thickness. Size fillers to produce adequate bearing to prevent bracket rotation and overstressing of substrate.

2.5 FINISHES

A. Shop Cleaning:
1. Clean all surfaces of steel. Remove all rust, mill scale, deposits of splatter, slag or flux, oil, dirt, and all other materials.
   a. Use hand tool, power tool, sandblasting, chemical cleaning, and any other method necessary to provide a smooth, sound surface.
2. Clean contact surfaces of high strength bolt of all burrs and material, which might prevent solid seating of the parts. Steel to receive bolts shall be primer painted except beneath the contact area of slip-critical bolts.

B. Shop Priming:
1. General:
   a. *"Painting of structural steel shall comply with the requirements contained in AISC 360. Painting of open-web steel joist girders shall comply with the requirements of SJI CJ-1.0, SJI JG-1.1, SJI K-1.1 and SJI LH/DLH-1.1. Individual structural members and assembled panels of cold-formed steel construction shall be protected against corrosion in accordance with the requirements contained in AISI S100. Protection of cold-formed steel light-frame construction shall also comply with the requirements contained in AISI S200"*, per CBC Section 2203A.2..
   b. Shop prime all steel except the following:
      1) Surfaces embedded in concrete, or mortar. Extend priming of partially embedded members to a depth of 2 inches.
      2) Contact surfaces for slip-critical (sc) high strength bolts.
      3) Surfaces within 2 inches of field welds.
      4) Top of structural support members when metal deck is welded to supports.
         a) Primer is required when metal deck is mechanically attached to structural support members.
      5) Surfaces to receive sprayed-fire-resistive materials (applied fireproofing).
      6) Surfaces to be galvanized.
2. Priming:
   a. Immediately after surface preparation, apply primer according to manufacturer's written instructions and at a rate recommended by SSPC to provide minimum film thickness. Use priming methods that results in full coverage of joints, corners, edges and exposed surfaces.
      1) Strip paint corners, crevices, bolts, welds and sharp edges.
      2) Apply two shop prime coats to areas, which will be inaccessible after assembly or erection.
   b. Provide PPG PAINTS field primers; or approved equivalent, in accordance with Specification Section - SUBSTITUTION PROCEDURES. Should the Contractor substitute another paint company other than "PPG PAINTS" in Specification Section - PAINTING, then coordination of steel primers with finish coats specified in Specification Section - PAINTING is the Contractor's responsibility.

c. Use the following shop painting systems on all normal environment interior steelwork:
   1) Surface Preparation: SSPC-SP2 "Hand Tool Cleaning" or SSPC-SP3 "Power Tool Cleaning".
   2) Application: Follow coating manufacturer's printed directions.
   3) Material: PPG PAINTS MULTI-PRIME 94-258 Primer.
   4) Number of Coats: One.
   5) Dry Film Thickness: 2.0 mils minimum.
   6) Volume Solids: 51.0 +/- 1.0% minimum.
   7) Generic Description: Modified Alkyd Resin Universal Primer.

d. Use the following shop painting systems on all exterior steelwork and interior steelwork subjected to wet conditions or fumes.
   1) Surface Preparation: SSPC-SP6 "Commercial Blast Cleaning".
   2) Application: Follow coating manufacturer's printed directions.
   3) Material: PPG PAINTS DIMETCOTE 302H Primer.
   4) Number of Coats: One.
   5) Dry Film Thickness: 3.0 mils minimum.
   6) Volume Solids: 78% +/-2%
   7) Generic Description: Reinforced Inorganic Zinc-Rich Urethane.

C. Hot-Dip Galvanizing:
   1. Zinc coatings on iron and steel products in accordance with ASTM A 123 "Standard Specification for Zinc (Hot-Dip Galvanzied) Coatings on Iron and Steel Products".
      a. Minimum thickness required shall be 3.9 mils.
      b. All items that will be exposed to view (i.e. security fence, handrails, guard rails, awnings, canopies and shade structures left exposed to view), shall be Hot-Dipped Galvanized in accordance with ASTM A 385, "Standard Practice for Providing High-Quality Zinc Coatings (Hot-Dip)".
   2. Zinc coatings on iron and steel hardware shall be in accordance with ASTM A 153 "Standard Specifications for Zinc Coating (Hot-Dip) on Iron and Steel Hardware".
   3. Galvanized repair paint: High-Zinc-Dust-Content, in accordance with SSPC-Paint 20 or DOD-P-21035, with dry film containing a minimum of 94 percent zinc dust by weight paint for re-galvanizing welds and repair painting galvanized steel.

2.6 SOURCE QUALITY CONTROL

A. Fabrication Tolerances:
   1. "Architecturally Exposed Structural Steel", all steel for the Custom Steel Fabrications and miscellaneous "Metal Fabrications" that are subject to view are defined as "Exposed-to-View" joints. All joints that are "Exposed to View" shall be in accordance with AISC Code of Standard Practice, Section 10, "Architecturally Exposed Structural Steel".
      a. All cope, miters and butt cuts in surfaces "Exposed-to-View" are made with uniform gaps of 1/8 inch if shown to be open joints, or in reasonable contact if shown without gap, in accordance with AISC Code of Standard Practice, Section 10.3.4.

B. Tests, Inspection:
   1. In accordance with Specification Section – TESTING LABORATORY SERVICES and the following:

a. Materials shall be certified, identified and tested in conformance with CBC Table 1705A.2.1. Commercial stock steel shall be identified in accordance with CBC Table 1705A.2.1.
b. Complete four-sided inspection of all steel shall be made when required by Architect.
c. Tests and inspection of Shop and field welding in accordance with CBC Table1705A.2.1. Perform shop and field welding only under supervision of welding inspector.
   1) Welds shall be in accordance with CBC Table 1705A.2.1.
   2) Inspection:
      a) Welding inspector shall be an AWS Certified Welding Inspector (CWI).
d. Tests & Inspection for High Strength Bolts in accordance with CBC Table 1705A.2.1.

2. Testing Laboratory:
   a. An inspection and testing laboratory will be selected by the Owner for testing and inspection as required by the Contract Documents. The selected laboratory shall conform to the requirements of ASTM E 329 "Standard Specification for Agencies Engaged in the Testing and/or Inspection of Materials Used in Construction". Documentary evidence of such conformance shall be submitted to the Owner and the Governing Agency.
   b. All materials, work, methods and equipment shall be subject to inspection at the mill, fabricating plant and at the building site. Material or workmanship not complying fully with the Contract Documents will not be accepted. The Contractor shall give the Testing Laboratory reasonable notice when ready for inspection and shall supply samples and test pieces and all facilities for inspection without extra charge. The Owner will assume the expense of making the tests and inspection except as otherwise specified in Division 1.
3. Cost of Testing and Inspection: Costs of testing and inspection of structural steel, except as specified hereunder and in Division 1, will be paid for by the Owner.
   a. All transportation costs and per diem living costs for inspection at fabricator's plant further than 75 miles from the job site will be back-charged to the Contractor.
   b. It is assumed that all fabrication will take place in one shop location only. All additional inspection costs will be back-charged to the Contractor.
   c. All mill tests and costs or re-test of plain materials shall be at the expense of the Contractor.
   d. Costs of tests required due to Contractor's failure to provide steel identifiable in accordance with the indicated ASTM designation shall be at the expense of the Contractor.
4. Structural Steel Testing and Inspection:
   a. If structural steel tests are indicated as required on the structural drawings, one tension and one bend test shall be made for each size of structural shape, plate and for each tube and pipe size. Tests to be made in accordance with requirements of appropriate ASTM designations.
   b. If structural steel tests are not indicated as required on the structural drawings, then for shapes, plates, bars, pipe and tubing, manufacturer's certified mill test reports and analysis for each heat will be acceptable for steel identifiable in accordance with indicated ASTM designation. Mill test reports shall indicate the physical and chemical properties of all structural steel used. Correlate individual heat numbers with each specified structural section.
   c. Unidentifiable Steel:

1) For Fy less than or equal to 36.0 ksi: Provide one tension and elongation test and one bend for each 5 tons or fraction thereof for each size.
2) For Fy greater than 36.0 ksi: Provide one tension and elongation test and one bend or flattening for each piece.

d. Costs of re-tests and additional testing required by the use of unidentifiable steels shall be the Contractor's responsibility. Additional costs of testing incurred by the Owner shall be deducted from the Contract Final Payment.

5. Expansion Anchors: Load test as indicated on the drawings.
6. Welding Inspection:
   a. If shop or field welding inspection is indicated on the structural drawings, all shop and field welded operations shall be inspected by a qualified welding inspector employed by the Testing Laboratory. Such Inspector shall be a person trained and thoroughly experienced in inspection of welds. The inspector's ability to distinguish between sound and unsound welding will be reliably established.
   b. The Welding Inspector shall make a systematic record of all welds. This record shall include:
      1) Identification marks of welders.
      2) List of defective welds.
      3) Manner of correction of defects.
   c. The welding inspector shall check the material, equipement and procedure, as well as the welds. He/she shall also check the ability of the welder. He/she shall furnish the Architect with a report, duly verified by him/her that the welding which is required to be inspected is proper, and has been done in conformity with the Contract Documents, and that he/she has used all means to determine the quality of the welds.
   d. All full penetration groove welds shall be subject to ultrasonic testing, as per AWS D1.1, Section 6 "Inspection, Part "C", Ultrasonic Testing of Groove Welds". All defective welds shall be repaired and re-tested with ultrasonic equipment at the Contractor's expense.
   e. Column Flanges: An area extending 6 inches above and below point where girder flanges area attached shall be inspected. Column flange edges shall be inspected visually, and entire area ultrasonically for lamination, plate discontinuities, and non-metallic inclusions.
   f. All partial penetration groove welds shall be tested by ultrasonic testing.
   g. When ultrasonic indications arising from the weld root be interpreted as either a weld defect or the backing strip itself, the Engineer shall be notified. The Engineer may require the removal of backing strip. The backing strip shall be removed at the expense of the Contractor, and if no root defects are visible the weld shall be re-tested. If no defect is indicated on this re-test, and no significant amount of base and weld metal have been removed, no further repair of welding is necessary. If a defect is indicated, it shall be repaired and re-tested at the Contractor's expense.
   h. The ultrasonic instrumentation will be calibrated by the technician to evaluate the quality of the welds in accordance with AWS D1.1.
   i. Other methods of inspection, for example, X-ray, gamma ray, magnetic particle, or dye penetrant, may be used on welds if felt necessary by the inspection laboratory, and with the approval of the Engineer.
   j. Base metal thicker than 1-1/2 inches, when subjected to through thickness weld shrinkage strains, shall be ultrasonically inspected for discontinuities directly behind such weld before and after joint completion.

k. End-welded studs shall be sampled, tested, and inspected per the requirements of the Structural Welding Code – Steel D1.1 Chapter 7, published by the American Welding Society.

l. At the discretion of the Owner's testing agency, the ultrasonic testing frequency may be reduced but may not be less than the following:

1) Initially, all welds requiring ultrasonic testing will be tested at the rate of 100 percent in order to establish the qualifications of each individual welder. If the reject rate is demonstrated to be less than 5 percent of the welds tested for each welder, then the frequency of testing for that welder may be reduced to 25 percent. IF the reject rate increases to 5 percent or more, 100 percent testing will be re-established until the rate is reduced to less than 5 percent. The percentage of rejects will be calculated for each welder independently.

m. A sampling of at least 40 completed welds will be made for such reduction evaluation. Reject rate is defined as the number of welds containing rejected defects divided by the number of welds completed. For evaluating the reject rate of continuous welds over 3' in length, each 12 linear inch increment of welds, 1 inch or less in thickness, will be considered as one weld. For evaluating the reject rate of continuous welds greater than 1 inch thickness, each 6 linear inches will be considered one weld.

7. High Strength Bolting Tests and Inspection:

a. Furnish certified test reports for each lot of bolts in accordance with Section 9 of ASTM A 325 "Standard Specification for Structural Bolts, Steel, Heat Treated, 120/105 ksi Minimum Tensile Strength" or ASTM A 490 "Standard Specification for Heat-Treated Steel Structural Bolts, 150 ksi Minimum Tensile Strength". Install bolts under the supervision of a qualified inspector in accordance with Section 9, Research Council "Specifications for Structural Joints using bolts for ASTM A 325 "Standard Specification for Structural Bolts, Steel, Heat Treated, 120/105 ksi Minimum Tensile Strength" or ASTM A 490 "Standard Specification for Heat-Treated Steel Structural Bolts, 150 ksi Minimum Tensile Strength".

b. If high strength bolting inspection is indicated or required on the structural drawings, the testing laboratory will visually inspect all high strength bolts.

c. While the work is in progress, the Project Inspector shall determine that the requirements of this Specification are met in the work. The Project Inspector shall observe the calibration procedures and shall monitor the installation of bolts to determine that all plies of connected material have been drawn together and that the selected procedure is properly used to tighten all bolts.

1) In addition to the requirement of the foregoing paragraph, for all connections specified to be slip critical (SC), the Project Inspector shall assure that the specified procedure was followed to achieve the pretension specified in the AISC. The pre-tension shall be verified by the Project Inspector for these bolts.

2) Bolts in connections identified as not being slip-critical nor subject to direct tension need not be inspected for bolt tension other than to ensure that the piles of the connected elements have been brought into snug contact.

C. Verification of Performance:

1. Testing Agent shall be a qualified person or Testing Laboratory listed and approved by DSA/SSS and selected by the Architect, and the Owner.

2. Testing Agent shall make Test and Inspection Reports certifying materials and workmanship to conform with Drawings and Specifications.

a. Cost of Testing and Inspection will be paid by Owner unless otherwise specified.

b. Cost of cutting and machining test samples shall be paid by Contractor.

PART 3 - EXECUTION

3.1 EXAMINATION

A. Verify, with steel erector present, elevations of concrete- and masonry-bearing surfaces and locations of anchor rods, bearing plates, and other embedments for compliance with requirements.
   1. Prepare a certified survey of bearing surfaces, anchor rods, bearing plates, and other embedments showing dimensions, locations, angles, and elevations.

B. Proceed with installation only after unsatisfactory conditions have been corrected.

3.2 PREPARATION

A. Provide temporary shores, guys, braces, and other supports during erection to keep structural steel secure, plumb, and in alignment against temporary construction loads and loads equal in intensity to design loads. Remove temporary supports when permanent structural steel, connections, and bracing are in place unless otherwise indicated.

3.3 ERECTION

A. Employ a licensed land surveyor for accurate erection of structural steel.
   1. Check elevations of bearing surfaces (concrete or masonry), and locations of anchor bolts and similar devices, before erection work proceeds.
   2. Report discrepancies to Architect.
   3. Do not proceed with erection until corrections have been made or until compensating adjustments to structural steel work have been agreed upon with the Architect.

B. Erect all Structural Steel frame work in accordance with AISC Specifications "Specification for the Design, Fabrication and Erection of Structural Steel for Building", latest edition, and AISC Code unless otherwise indicated on Drawings or Specification.
   1. Framing: Carry up framing true and plumb. Provide temporary bracing wherever necessary to support all loads to which the structure may be subjected, including erection equipment and its operation. Leave bracing in place as long as may be required for safety. As erection progresses securely connect the work to take care of all dead load, wind and erection stresses.
   2. Connections:
      a. Machine Bolts shall be installed with cut washer under nut.
      b. High Strength Bolts shall be used to assemble structural joints in accordance with AISC "Specification for Structural Joints using bolts for ASTM A 325 "Standard Specification for Structural Bolts, Steel, Heat Treated, 120/105 ksi Minimum Tensile Strength" or ASTM A 490 "Standard Specification for Heat-Treated Steel Structural Bolts, 150 ksi Minimum Tensile Strength", unless otherwise indicated on the drawings.

1) Tighten nuts for Bolts in accordance with CBC Sections 1705A.2.1. Load Indicating Devices shall be pre-approved by the DSA/SSS, and certification by an independent testing laboratory stating that the devices meet AISC Specifications shall be submitted to Project Engineer and DSA/SSS.
2) Manufacturer shall also submit installation procedures prior to incorporation into the work for approval by the Project Engineer.
3) Once approved, manufacturer's installation instructions shall be followed for all conditions. Mark bolts that have been completely tightened with an identifying symbol.
4) Connections shall be slip-critical (SC) type.
   a) Slip-critical connections, surfaces shall be in accordance with AISC "Specification for Structural Joints Using bolts for ASTM A 325 "Standard Specification for Structural Bolts, Steel, Heat Treated, 120/105 ksi Minimum Tensile Strength" or ASTM A 490 "Standard Specification for Heat-Treated Steel Structural Bolts, 150 ksi Minimum Tensile Strength".
5) Contacting surfaces shall be painted, except for friction-type (SC) connections.
6) Provide washers in accordance with ASTM A 325 "Standard Specification for Structural Bolts, Steel, Heat Treated, 120/105 ksi Minimum Tensile Strength" or ASTM A 490 "Standard Specification for Heat-Treated Steel Structural Bolts, 150 ksi Minimum Tensile Strength".

c. Welding: The details of all joints, the technique of welding employed, the appearance and quality of welds made, and the methods used in correcting defective work shall conform to "AISC Specs", "AWS Code", Table 1705A.2.1.
1) All "exposed-to-view" welds will be smooth and flush with no voids showing and still be in conformance with standards referenced herein.
2) All exposed to view butt welds shall be flush as connected members will allow. Minor defects and transitions in metal surfaces shall be filled and sanded out with an approved metal filler prior to painting.
3) Exposed fillet welds are acceptable "as is" provided the surface chevrons are shallow and have no abrupt protrusions.

3. Cutting Holes: The use of a cutting torch is permissible only if the metal being cut is not carrying stress during the operation and only with the prior approval of the Architect and DSA/SSS for each specific condition.
4. Setting Plates: Set column base plates and leveling plates to correct elevations and temporarily support on steel wedges or shims until the supported members have been plumbed, locked in place and grouted.

C. Erection Sequence: Erect steel in accordance with special erection sequences where special erection sequences are indicated on the contract documents.

D. Before and during erection, keep all structural steel clean. Ship, handle and store steel in a manner to avoid injury to members. Steel members showing evidence to rough handling or injury will be rejected.

E. Mark each member with erection identification corresponding to mark shown on erection drawings. Carefully plan erection of structural steel so that no cutting and removal of material will be necessary. Do not torch burn in the field, unless specifically permitted by Engineer.

F. Provide sufficient bracing, shoring and guys to effect safe and satisfactory erection. Provide bracing and shoring capable of holding steel work plumb and properly aligned while field connections are being made, and until lateral force resisting elements are deemed by the Architect to be capable of bracing structure. Temporary bracing shall be adequate to resist lateral forces from wind or seismic prior to the completion of the lateral resisting system.

G. Set bearing and base plates with extreme care. Bring level, to line and grade with leveling plates or by leveling nuts and bolts. Grout solid under plates with a flowable non-shrink grout per Specification Section – CAST-IN-PLACE CONCRETE prior to applying vertical load.

H. Field Assembly: Set structural framing accurately to the lines and elevations indicated. Align and adjust the various members forming a part of a complete frame or structure before permanently fastening. Before assembly, clean bearing surfaces and other surfaces which will be in permanent contact. Perform necessary adjustments to compensate for discrepancies in elevations and alignment.

1. Shimming or other adjustments not indicated on drawings shall be approved by the Engineer prior to installation. Level and plumb individual members of the structure within specified AISC tolerances except as noted herein. Column shimming shall be 1/4 inch.

I. All welds shall be full and clean, and conform to AISC and AWS Specifications.

J. Erection Tolerances: Maintain erection tolerances of structural steel and architecturally exposed structural steel within AISC's "Code of Standard Practice for Steel Buildings and Bridges."

1. Individual pieces shall be erected so that the deviation from plumb, level and alignment shall not exceed 1 to 500 plus:
2. The maximum displacement of the center-line of columns adjacent to elevator shafts, from the established column line, shall not be more than 1 inch at any point from the established column line in the first 20 stories.
3. In order to provide a true, flat plane for the exterior elevations, install all steel framing at the exterior walls of the building, so that the center lines of such framing does not vary by more than 1 inch for the length of the building.
   a. Also, install each vertical member on such grids so that its vertical center-line does not vary by more than 1/2 inch from a vertical line for each story and 1 inch for its full height.
4. Take special care that column base plates are parallel and perpendicular to faces of columns and that bolt holes are accurately placed.

K. Tower Crane: The design for the support and bracing for a tower crane shall be the responsibility of the General Contractor. The design shall be prepared by a structural engineer licensed in the state of California. Drawings and calculations shall be stamped and signed by the structural engineer. Concentric, torsional, and/or eccentric loading to the main structure shall be resolved by the addition of structural steel for shear tabs, stiffeners, drag ties, bracing struts, etc. Such items shall be designed, detailed, furnished and installed by the contractor.

L. Hoisting And Bracing:

1. Provide all hoisting and erecting equipment and power.
2. Provide and maintain any and all safety railings, toe boards, etc., required for the erection of steel framing and metal decking.
3. Brace the erected frame in a manner which will assure safety and proper alignment to receive the metal decking and until the concrete slabs have been poured and have set.

4. Erect building frame true and level. Erect columns in a manner to allow for movement due to welding shrinkage and thermal expansion and contraction of framing. Check for plumb after erection of each level. Maintain structural stability of frame during erection. Provide temporary bracing where necessary to maintain frame stability and to support required loads, including equipment and its operation.

3.4 CONSTRUCTION

A. Special Techniques:
   1. Architecturally Exposed Structural Steel and "Exposed to View" Metal Fabrications.
      a. At all exposed joints, continuous fill with Plastic Steel Putty. Sand smooth and uniform and ready to receive finishes.
         1) Clean all areas to have smooth seams with manufacturers recommended cleaner.
         2) Place Steel Putty and cure.

3.5 REPAIR / RESTORATION

A. Defective Work shall be immediately replaced with proper work. Such replaced Work and the Testing and Inspection for it shall be at the expense of the Contractor. If defects or damages cannot be corrected in the field, the material shall be returned to the shop or new parts furnished, as the Architect directs, and the Contractor shall pay all costs therefor.
   1. Galvanized Surfaces: Clean areas where galvanizing is damaged or missing and repair galvanizing to comply with ASTM A 780 "Practice for Repair of Damaged and Uncoated Areas of Hot-Dipped Galvanized Coatings".
   2. Primer Coat - On all hot-dip iron or steel that needs repair, provide one primer coat of the following:
      a. Zinc Rich Galvanize No. 1141 by AERVOE INDUSTRIES, INC., or approved equivalent.
      b. Provide a smooth-flowing, high-solids compound that provides a fast-drying coating that protects ferrous metals in highly corrosive environments. Coating shall be 97% pure zinc metallic flake, which leaves 94% zinc in the dry film.
      c. Overall Dry Film Thickness 2.0 mil.
   3. Finish Coat - On all hot-dip iron or steel that needs repair, provide one finish coat over a properly cured primer coat of the following:
      a. Zinc Rich Galvanize No. 1141 by AERVOE INDUSTRIES, INC., or approved equivalent.
      b. Provide a smooth-flowing, high-solids compound that provides a fast-drying coating that protects ferrous metals in highly corrosive environments. Coating shall be 97% pure zinc metallic flake, which leaves 94% zinc in the dry film.
      c. Overall Dry Film Thickness 2.0 mil.

B. Touch-up Primer Painting: Immediately after erection, clean exposed areas where primer is damaged or missing and paint with the same material as used for shop priming to comply with SSPC-PA1 "Touching Up Shop-Painted Surfaces".
   1. Clean and prepare surfaces by SSPC-SP 2 "Hand-Tool Cleaning" or SSPC-SP 3 "Power-Tool Cleaning".

3.6 FIELD QUALITY CONTROL

A. Site Tests:
   1. As required by Regulatory Requirements.

B. Tests, inspection:
   1. As required by Regulatory Requirements.
   2. Schedule inspections and notify the Architect, Project Inspector and any other regulatory agencies of the time at least 48 hours prior to the inspection.
   3. No work shall be without the inspections required by Regulatory Requirements.
   4. Tests and inspection of field welding in accordance with CBC Table 1705A.2.1. Perform field welding only under supervision of welding inspector.
      a. Welds shall be in accordance with CBC Table 1705A.2.1.
      b. Inspection shall be in accordance with CBC Table 1705A.2.1.
         1) Welding inspector shall be an AWS Certified Welding Inspector (CWI).

C. Verification of Performance:
   1. Certification:
      a. The Contractor shall engage and pay for a registered Civil Engineer or Licensed Land Surveyor to check the alignment, plumbness, elevation, and overall accuracy of the erected framing at appropriate stages during construction and at completion of erection.
      b. Civil Engineer or Licensed Land Surveyor shall submit written verification and certification that the entire installation is in accordance with the Contract Documents.

3.7 SCHEDULES

A. Metal Fabrication Schedule should be used as a guide only and is not considered as a complete list. Refer to Drawings for location and details:
   1. Miscellaneous backing members, brackets, and supports for work installed by other trades.
   2. Ladder
   3. Guard Rail
   4. Hand Rail
   5. Handrail Bracket
   6. Stair Rail
   7. Queuing Rail
   8. Down Spouts

END OF SECTION

INTENTIONALLY LEFT BLANK

SECTION 053000 – METAL DECK

PART 1 - GENERAL

1.1 SUMMARY

A. This Section includes the following:
   1. Provide all material, labor, equipment and services necessary to completely install all Metal Deck materials, accessories and other related items necessary to complete the Project as indicated by the Contract Documents.

B. Related Sections: The following Project Manual Sections contain requirements that relate to this section:
   1. ALL DIVISION 00 SPECIFICATION SECTIONS.
   2. ALL DIVISION 01 SPECIFICATION SECTIONS.
   3. 03 15 14 DRILLED ANCHORS
   4. 03 30 00 CAST-IN-PLACE CONCRETE
   5. 04 22 00 CONCRETE MASONRY UNITS
   6. 05 12 00 STEEL AND FABRICATIONS
   7. 06 10 00 ROUGH CARPENTRY
   8. 07 21 00 INSULATION
   9. 07 40 00 METAL PANELS (Factory Finished Metal Roof and Wall Panels)
   10. 07 51 13 BUILT-UP ROOFING
   11. 07 53 29 ELASTOMERIC MEMBRANE ROOFING
   12. 07 60 00 SHEET METAL
   13. 07 72 00 ROOF ACCESSORIES
   14. 07 92 00 SEALANTS
   15. 09 50 00 ACOUSTICAL CEILINGS
   16. 09 91 00 PAINTING
   17. ALL SPECIFICATION SECTIONS IN THE FACILITY SERVICES SUBGROUP.
   18. ALL SPECIFICATION SECTIONS IN THE SITE AND INFRASTRUCTURE SUBGROUP.

1.2 REFERENCES

A. Standards:
   1. In accordance with Specification Section – REGULATORY REQUIREMENTS and the following standards:
      a. AISC American Institute of Steel Construction.
      b. AISI American Iron and Steel Institute.
      c. ASTM American Society for Testing and Materials.
      d. AWS American Welding Society "Structural Welding Code".
      e. DOD Department of Defense
      f. ICC International Code Council
      g. SDI Steel Deck Institute.
      h. SSPC The Society for Protective Coatings

1.3 SUBMITTALS

A. Submit in accordance with Specification Section - SUBMITTAL PROCEDURES:
   1. Product Data.
      a. Include all accessories such as Metal Trim, Flute Closure Trim, Neoprene Closure Tape, Joint Covers, and Sound Insulation Batts (sized to fit flute profile).
   2. Shop Drawings:
      a. Indicate deck sheet layout and all installation details. Contract documents may not be used as shop drawings.
      b. Manufacturer's specifications for each Deck Type.
      c. Certification: Provide affidavits from the manufacturer listing mill test certificates by number for each size and type of decking.
      d. Manufacturer shall provide affidavits of approval by the International Code Council (ICC) for the metal decking shapes proposed.
   3. Quality Assurance/Control Submittals:
      a. Design Data.
         1) Submit manufacturer's design data indicating Metal Panel Section Properties (including gage, weight in pounds per ft^2, I+ and I-(in^4/ft), S+ and S-(in^3/ft), and profile dimensions).
      b. Test Reports:
         1) Submit Steel Mill Test Reports for each heat establishing conformity with these Specifications in accordance with CBC Section 2203A.
         2) Submit five (5) copies of Shop and Field Welding Tests and Inspection Reports.
   4. Closeout Submittals in accordance with Specification Sections in Division One:
      a. Project Record Documents in accordance with Specification Section - PROJECT DOCUMENTS.

1.4 QUALITY ASSURANCE

A. Qualifications:
   1. Material Qualifications:
      a. Materials shall be identified and tested in conformance with CBC Section 2201A.
   2. Installer Qualifications:
      a. Engage an experienced Installer who has successfully completed three (3) projects of similar scope and size to that indicated for this Project.
      b. Engage an experienced Installer who is certified in writing by the manufacturer listed herein as qualified to install manufacturer's product (or system) in accordance with manufacturer's warranty requirements.
   3. Manufacturer/Supplier Qualifications:
      a. Firm experienced in successfully producing/supplying products similar to that indicated for this Project, with sufficient production/supply capacity to produce/supply required units without causing delay in the work.

B. Regulatory Requirements:
   1. In accordance with Specification Section - REGULATORY REQUIREMENTS, and the following:

a. CARB Materials and equipment used for this Project shall comply with the current applicable regulations of the California Air Resources Board (CARB)and the Environmental Protection Agency (EPA), in the area where the project is located.

b. Tests and Inspection of Shop and field welding shall be in accordance with CBC Section 2205A and 2213A.

1) Perform shop and field welding only under supervision of an AWS/CWI inspector, by welders recently qualified by Test as prescribed in AWS "Standard Qualifications Procedure", and per CBC Section 2205A and 2213A.

c. When Metal Decking is part of a "listed" deck assembly as indicated on the drawings, provide Metal Decking units listed in Underwriter's Laboratories (UL) "Fire Resistive Directory", or other approved "Fire Resistive Directory", with each deck unit bearing the fire resistive label and marking for specific system detailed.

C. Certificates:

1. Provide a letter on Contractor's Letterhead certifying Work provided, meets or exceeds, the requirements of this Section.

1.5 SCHEDULING

A. Schedule the Work so that there will be no excessive inspection time. At all times that an inspector is required, sufficient work shall be laid out and adequate personnel supplied so that the Inspector's time will be used to full advantage. If inspection costs become excessive because of poor shop procedure, such excess costs will be paid for by the Owner, but deducted from the Contract Price. Poor procedures will be determined upon review of Inspection and/or Testing Reports. The rate for charging the excess costs will be as follows:

1. Minimum of three (3) certified welders are used, Owner will pay 100 percent.
2. Only two (2) certified welders are used, Contractor will be charged 1/3 of the Inspection cost.
3. Only one (1) certified welder is used, the Contractor will be charged 2/3 of the inspection cost.

1.6 WARRANTY

A. Contractor's General Warranty:

1. In accordance with Specification Section - WARRANTIES.

B. Manufacturer's Warranty:

1. In accordance with manufacturer's written standard warranty:

a. Warranty Period One (1) Year.

C. Installer's Warranty:

1. In accordance with the terms of the Specification Section - WARRANTIES

a. Warranty Period One (1) Year.

PART 2 - PRODUCTS

2.1 MANUFACTURERS

A. These products listed herein establish the size, pattern, color range and function selected by the Architect for this Project. Manufacturers that are listed as acceptable alternative manufacturers and substitutions must still comply with the requirements of this project and the products listed in order to be approved as an equivalent during the Submittal Process. If the acceptable alternative manufacturers listed or substitutions are not approved during the Submittal Process due to non-compliance with the contract documents, then the Contractor shall submit product specified.

1. Specified product manufacturer:
   a. CENTRIA MANUFACTURING "Perforated 1 1/2"x20 ga BR5-36 Panel".
   b. Acceptable alternative manufacturers:
      1) ASC PROFILES.
      2) VERCO MANUFACTURING COMPANY.

B. Products from other manufacturers not listed must submit in accordance with Specification Section - SUBSTITUTION PROCEDURES.

2.2 MATERIALS

A. Structural:

1. Steel for galvanized Metal Deck Units shall be in accordance with ASTM A 653 "Standard Specification for Steel Sheet, Zinc-Coated (Galvanized) or Zinc-Iron Alloy-Coated (Galvannealed) by the Hot-Dip Process", grade as indicated on the drawings and in compliance with SDI specifications. The steel sheets shall have received, before being formed, a metal protective coating of Zinc conforming to ASTM A653 "Standard Specification for Steel Sheet, Zinc-Coated (Galvanized) or Zinc-Iron Alloy-Coated (Galvannealed) by the Hot-Dip Process" Class G60 coating.
2. Provide deck sections, type and gage as indicated on the drawings. Other manufacturers producing deck complying with these Specifications, and having equivalent properties and dimensions will be subject to the Architect's review upon submission of substantiating data, and may be used only if equivalent to deck sections specified, in the Architect's opinion.
3. All deck units shall have an International Code Council (ICC) Evaluation Services Report.
   a. Diaphragm shear capacities shall be comparable (within 5%) to those listed on the drawings for the deck, welding, and spans indicated.
4. Units shall be in lengths to span over three or more supports. Where steel layout does not permit two-span minimums, notify the Structural Engineer prior to fabrication.
5. For limitations of loads to metal decking see calculations.
6. All deck units shall have male and female interlocking side joints. All deck units with concrete or insulating concrete shall be vented to provide 1% open area.

7. Prior to covering or filling metal decking, verify and coordinate installation requirements of suspended metal framing, suspended acoustical ceiling systems, mechanical and electrical work or other items as required. Provide inserts, clips, anchors or fasteners as indicated or as otherwise required to provide for the complete and proper installation of suspended items from the metal deck.
    a. Coordinate with Specification Section - ACOUSTICAL CEILINGS.
    b. Verify and coordinate locations, patterns, spacing, etc. of suspension members and connectors required by other Sections of the Specifications.
    c. Where suspension or hanger wires are required under other Sections, verify and coordinate locations, patterns, spacing, etc. with the appropriate trade. No loading other than suspended ceilings may be suspended from metal deck without concrete fill. Suspend all piping, ducting, conduit and equipment from steel beams.
8. Structural Properties: Deck shall have minimum structural properties as indicated on Structural Drawings.
9. Acoustical Properties: When Acoustical Decks are required, provide acoustical deck with the following properties:
    a. Vertical webs (except at side joint) shall be perforated with 5/32" diameter holes on staggered 7/16" centers to provide 0.85 Noise Reduction Coefficient (NRC). NRC of completed assembly shall be as determined by tests in accordance with ASTM C 423 "Standard Test Method for Sound Absorption and Sound Absorption Coefficients by the Reverberation Room Method".

2.3 ACCESSORIES

A. Miscellaneous Steel Shapes:
    1. Provide in accordance with Specification Section – STEEL AND FABRICATIONS, and ASTM A 36.

B. Shear Connectors:
    1. Headed stud type, in accordance with ASTM A 108 "Standard Specification for Steel Bars, Carbon, Cold-Finished, Standard Quality", Grade 1015 or 1020, cold-finished carbon steel, with dimensions complying with AISC specifications.
        a. Tensile Strength: 60,000 psi.
        b. Elongation in 2 Inches: 20 percent.
        c. Reduction of Area: 50 percent.

C. Fabricated Sheet Metal:
    1. Provide in accordance with Specification Section - SHEET METAL and ASTM A 653, commercial quality, galvanized.
        a. Cell closures where shown on Drawings.
        b. Light gage plate fillers attached to deck to provide an uninterrupted roof plane.
        c. Drain sumps and/or roof drain mounting plates as detailed.
        d. Cell end closures column flashing and miscellaneous closures to prevent concrete leakage.
        e. Miscellaneous accessories incidental to erection of deck.

D. Acoustical Insulation: Glass fiber type, 1-1/2" thick, in accordance with ASTM C 665 "Standard Specification for Mineral-Fiber Blanket Thermal Insulation for Light Frame Construction and Manufactured Housing", Type I, Class A, sized to fit the appropriate flute profile.

E. Welding Rods: E70XX minimum.

2.4 FABRICATION

A. Shop Assembly:
1. Form metal deck units in lengths to span three or more supports, with flush, telescoped, or nested 2-inch laps at ends and interlocking or nested side laps, of metal thickness, depth, and width as indicated.
   a. Roof Deck Units:
      1) Provide deck configurations that comply with SDI "Specifications and Commentary for Steel Roof Deck".
2. Accessories:
   a. Metal Cover Plates:
      1) Fabricate metal cover plates for end-abutting floor deck units of not less than same thickness as decking.
      2) Form to match contour of deck units and approximately 6-inches wide.
   b. Metal Closure Strips:
      1) Fabricate metal closure strips, for cell raceways and openings between decking and other construction, of not less than 0.045-inch (18 gage) sheet steel.
      2) Form to provide tight-fitting closures at open ends of cells or flutes and sides of decking.
      3) Continuous closures parallel and over beam flanges are not allowed.
      4) Fabricate Profiled Metal Closure Strips for exposed "top of wall" connections and similar conditions where flutes are to be closed to view on underside of deck.
   c. Roof Sump Pans:
      1) Fabricate from single piece of 0.071-inch (14 gage) minimum galvanized sheet steel with level bottoms and sloping sides to direct water flow to drain.
      2) Provide sump pans of adequate size to receive roof drains and with bearing flanges not less than 3-inches wide.
      3) Recess pans not less than 1-1/2 inches below roof deck surface unless otherwise shown or required by deck configuration.
      4) Holes for drains shall be cut in the field.

2.5 FINISHES

A. Hot-Dip Galvanizing (both sides of metal deck):
1. Zinc coatings on iron and steel products in accordance with ASTM A 123 "Standard Specification for Zinc (Hot-Dip Galvanized) Coatings on Iron and Steel Products".
2. Zinc coatings on iron and steel hardware shall be in accordance with ASTM A 153 "Standard Specifications for Zinc Coating (Hot-Dip) on Iron and Steel Hardware".
3. Galvanized repair paint: High-Zinc-Dust-Content, in accordance with SSPC-Paint 20 or DOD-P-21035, with dry film containing a minimum of 94 percent zinc dust by weight paint for re-galvanizing welds and repair painting galvanized steel.

PART 3 - EXECUTION

3.1 EXAMINATION

A. Site Verification of Conditions:
1. Prior to the execution of the Work under this specification section, inspect the installed Work executed under other specification sections of this Project Manual which affect the execution of Work under this specification section.
2. Report unacceptable conditions to the Architect. Do not begin Work until unacceptable conditions have been corrected.
3. Execution of Work under this specification section shall constitute acceptance of existing conditions.

3.2 PREPARATION

A. Coordination:
1. Coordinate Work under this specification section with Work specified under other specification sections to ensure proper and adequate interface of Metal Decking Work specified under this specification section.

B. Protection:
1. Protect all adjacent surfaces from drips, spray, welding burns, and other damage from Work under this specification section.

C. Surface preparation:
1. Prepare surface of metal decking for any additional finish as indicated on the drawings in accordance with manufacturer's written instructions and recommendations.

3.3 INSTALLATION

A. General:
1. In accordance with Regulatory Requirements.
2. In accordance with manufacturer's written instructions and recommendations unless specifically noted otherwise.
3. In accordance with approved shop drawings.
4. Set plumb, level, and square to supports.

B. Layout:
1. Lines shall be straight and true without deformations, creases, wrinkles or noticeable defects.
2. Provide one deck unit continuous over three (3) supports, minimum, unless noted otherwise.
3. Abut end joints neatly at centerline of support.
4. Bend decking to conform to slopes and warps as required for solid contact to framing that allows proper welding.

5. Shoring for metal decking shall be provided by the contractor as required and as indicated in the corresponding ICC Evaluation Services Report. Coordinate shoring requirements for construction live load (and concrete placement) with the manufacturer.
6. All deck units shall break over beams.
7. Provide low ribs at all beams parallel to deck. As an alternate, the deck may be broken and in-filled with a flat pan to provide deck welding to parallel beams.
8. Butt deck units tight over steel beams.
9. Provide 3/4" clear concrete cover around all welded studs.

C. Minimum Fastening Requirements:
1. Fasten in accordance with the structural drawings and/or manufacturer's written recommendations whichever is most restrictive by use of stainless steel #14 tek screws with neoprene washers at each flute or at 6" o.c. along centerline of low flute.
2. Roof Deck units shall be fastened to resist gross uplift loading in accordance with CBC Section 1609A with a minimum of 45 lbs./ft2 at eave overhang, and 30 lbs./ft2 for other roof areas.
3. The metal deck shall be fastened to all structural members both parallel and perpendicular. Spread deck and modify layout where structural members are parallel to the metal deck ribs.

D. Cutting and Fitting:
1. Cut and neatly fit deck units and accessories around other Work projecting through or adjacent to the decking, and support of other Work shown.
2. Provide additional metal reinforcement and closure pieces as required for strength, continuity of decking, and support of other Work shown.
3. Provide DSA/SSS approved hanger slots or clips between cells of flutes of lower element where floor deck units are to receive hangers for support of ceiling construction, air ducts, diffusers, or lighting fixtures.
   a. Hanger clips designed to clip over male side lap joints of floor deck units that are approved by DSA/SSS may be used instead of hanger slots.
   b. Local slots or clips at no more than 14-inches o.c. in both directions, not over 8-inches form walls at ends, and not more than 8-inches form walls at sides, unless otherwise indicated on the drawings.
   c. Provide manufacturer's standard hanger attachment devices provided they are in accordance with IR 25-2.13 or IR 25-3, and approved by DSA/SSS.

E. Provide metal joint covers at abutting ends and changes in direction of floor deck units, except where taped joints are required.

F. Provide roof sump pans over openings provided in roof decking and weld to top decking surface. Space welds not more than 12-inches o.c. with at least one weld at each corner.

G. Weld shear connectors to supports through decking units as shown on the structural drawings.
1. Do not weld shear connectors through two layers (lapped ends) of decking units.
2. Weld only on clean, dry deck surfaces.

H. Provide metal closure strips at open uncovered ends and edges of roof decking and in voids between decking and other construction.
1. Weld into position to provide a complete decking installation.
2. Continuous closure perpendicular to flutes not allowed.

3.4 REPAIR / RESTORATION

A. After decking installation, wire brush, clean, and paint scarred areas, welds, and rust spots on top and bottom surfaces of decking units and supporting steel members.
   1. Touch-up galvanized surfaces with galvanizing repair paint applied in accordance with manufacturer's written instructions.
   2. Touch-up painted surfaces with same type of shop paint used on adjacent surfaces.
   3. In areas where shop-painted surfaces are to be exposed, apply touch-up paint to blend into adjacent surfaces.
   4. Clean surfaces of installed deck by effective means to receive sprayed-on fireproofing or finish painting as indicated.

3.5 FIELD QUALITY CONTROL

A. Site Tests:
   1. As required by Regulatory Requirements.
      a. Inspection of installation as per Specification Section – TESTING LABORATORY SERVICES.

B. Inspection:
   1. As required by Regulatory Requirements.
   2. Schedule inspections and notify the Architect, Owner's Inspector and any regulatory agencies of the time at least 48 hours prior to the inspection.
   3. No Work shall be without the inspections required by Regulatory Requirements.
   4. All materials, methods and equipment shall be subject to inspections by the Testing Laboratory at any time.
   5. Welding Inspection: Welding of metal deck shall be performed under the inspection of the Testing Laboratory. Inspection shall conform to CBC Section 2213A.
   6. Examine areas to receive work specified. Do not begin work until underlying work is complete, all required inspections have been made, and all conditions, which might prevent proper installation or impair performance of work have been corrected.
   7. Beginning installation means accepting conditions of underlying work.
   8. If supporting steel work is not properly aligned or sufficiently level to permit proper bearing of metal decking, such deficiency shall be corrected by the Contractor before placing units.

C. Defective Deck:
   1. Units of decking that become deformed or damaged to such extent that they are weakened or unsuitable for use shall be removed and replaced at no cost to the Owner.

3.6 CLEANING

A. Cleaning:
   1. Clean in accordance with Specification - PROJECT CLOSEOUT.
      a. Clean all surfaces of Metal Deck to receive concrete fill as required to assure adequate bond in accordance with manufacturers requirements.
      b. Clean all surfaces of Metal Deck prior to painting.

END OF SECTION

SECTION 061000 – ROUGH CARPENTRY

PART 1 - GENERAL

1.1 SUMMARY

A. This Section includes the following:
   1. Provide all material, labor, equipment and services necessary to complete all rough carpentry, accessories and other related items necessary to complete the Project as indicated by the Construction Documents unless specifically excluded.

B. Related Sections: The following Sections contain requirements that relate to this Section:
   1. ALL DIVISION 00 SPECIFICATION SECTIONS.
   2. ALL DIVISION 01 SPECIFICATION SECTIONS.
   3. 03 11 01 CONCRETE FORMWORK
   4. 03 15 14 DRILLED ANCHORS
   5. 03 30 00 CAST-IN-PLACE CONCRETE
   6. 04 22 00 CONCRETE MASONRY UNITS
   7. 05 12 00 STEEL AND FABRICATIONS
   8. 05 30 00 METAL DECK
   9. 06 17 13 COMPOSITE LUMBER
   10. 06 17 33 WOOD JOISTS
   11. 06 18 00 GLUE-LAMINATED CONSTRUCTION
   12. 06 41 23 MODULAR CASEWORK
   13. 07 21 00 INSULATION
   14. 07 31 13 SHINGLES
   15. 07 40 00 METAL PANELS
   16. 07 51 13 BUILT-UP ROOFING
   17. 07 53 29 ELASTOMERIC MEMBRANE ROOFING
   18. 07 60 00 SHEET METAL
   19. 07 72 00 ROOF ACCESSORIES
   20. 07 92 00 SEALANTS
   21. 08 11 00 METAL DOORS AND FRAMES
   22. 08 31 13 ACCESS DOORS AND FRAMES
   23. 09 24 00 CEMENT PLASTER
   24. 09 29 00 GYPSUM BOARD
   25. 09 30 00 TILE
   26. 09 50 00 ACOUSTICAL CEILINGS
   27. 09 65 10 RESILIENT BASE AND ACCESSORIES
   28. 09 68 40 CARPET
   29. 10 05 00 MISCELLANEOUS SPECIALTIES
   30. 10 11 00 VISUAL DISPLAY BOARDS
   31. 10 14 00 IDENTIFYING DEVICES
   32. 10 21 13 TOILET PARTITIONS
   33. 10 28 13 TOILET ACCESSORIES
   34. 10 44 00 FIRE PROTECTION SPECIALTIES
   35. ALL SPECIFICATION SECTIONS IN THE FACILITY SERVICES SUBGROUP.
   36. ALL SPECIFICATION SECTIONS IN THE SITE AND INFRASTRUCTURE SUBGROUP.

1.2 REFERENCES

A. Standards:
1. In accordance with the following standards:
a. ALSC American Lumber Standards Committee
b. ANSI American National Standards Institute
c. APA The Engineered Wood Association (Formerly the American Plywood Association)
d. ASME American Society of Mechanical Engineers International
e. AWPA American Wood Protection Association
f. CABO Council of American Building Officials
g. FS Federal Specification
h. ICC International Code Council
i. NDS National Design Specification for Wood Construction
j. NIST National Institute of Standards and Technology
k. PS Product Standards of the U.S. Department of Commerce
l. RIS Redwood Inspection Service
m. WCLIB West Coast Lumber Inspection Bureau
n. WWPA Western Wood Products Association

1.3 SUBMITTALS

A. Submit in accordance with Specification Section - SUBMITTAL PROCEDURES:
1. Product Data:
a. Submit manufacturer's data for Wood-Preservative Treatment.
b. Submit manufacturer's data for Fire-Retardant Treatment.
c. Submit manufacturer's data for power driven fasteners, metal-framing connectors, and metal framing anchors.
2. Quality Assurance/Control Submittals:
a. Material Certificates: Submit three (3) copies of Material Certificates of Compliance to Standards and Regulatory Requirements (one for Architect, Owner and Contractor).

1.4 QUALITY ASSURANCE

A. Qualifications:
1. Installer Qualifications:
a. Engage an experienced Installer who has successfully completed three (3) projects of similar scope and size to that indicated for this Project.

B. Regulatory Requirements:
1. In accordance with Specification Section - REGULATORY REQUIREMENTS, and the following:
a. CARB Materials and equipment used for this Project shall comply with the current applicable regulations of the California Air Resources Board (CARB) and the Environmental Protection Agency (EPA), in the area where the project is located.

C. Meetings:
1. Pre-Installation: Scheduled by the Contractor prior to the start of work.
   a. Coordinate the work with other work being performed.
   b. Identify any potential problems that may impede planned progress and proper installation of work regarding quality of installation and warranty requirements.
2. Progress: Scheduled by the Contractor during the performance of the work.
   a. Review for proper installation of work progress.
   b. Identify any installation problems and acceptable corrective measures.
   c. Identify any measures to maintain or regain project schedule if necessary.
3. Completion: Scheduled by the Contractor upon proper completion of the work.
   a. Inspect and identify any problems that may impede issuance of warranties or guaranties.
   b. Maintaining installed work until the Notice of Substantial Completion has been executed.

1.5 DELIVERY, STORAGE, AND HANDLING

A. Deliver undamaged products to project site in manufacturer's sealed containers or bundles with tags and labels intact.

B. Storage and Protection:
1. Products shall be stored above ground on level platforms, six (6) inches above ground, allowing air circulation under stacked units.
2. Cover materials with protective waterproof covering providing for adequate air circulation and ventilation.

1.6 PROJECT CONDITIONS

A. Environmental Requirements:
1. Dust Control: Perform work in a manner as to minimize the spread of dust and flying particles.
2. Burning: No burning will be allowed on-site.
3. Rain: Work under this section shall not be started or maintained under threat of rain unless the work is not affected by the rain.

B. Existing Conditions:
1. Examine site and compare it with the drawings and specifications. Thoroughly investigate and verify conditions under which the work is to be performed. No allowance will be made for extra work resulting from negligence or failure to be acquainted with all available information concerning conditions necessary to estimate the difficulty or cost of the work.

1.7 WARRANTY

A. Contractor's General Warranty:
1. In accordance with Specification Section - WARRANTIES.

B. Manufacturer's Warranty:

1. In accordance with manufacturer's written standard warranty:
   a. Warranty Period One (1) Year.

C. Installer's Warranty:
1. In accordance with the terms of the Specification Section - WARRANTIES
   a. Warranty Period One (1) Year.

PART 2 - PRODUCTS

2.1 MANUFACTURERS

A. These products listed herein establish the size, pattern, color range and function selected by the Architect for this Project. Manufacturers that are listed as acceptable alternative manufacturers and substitutions must still comply with the requirements of this project and the products listed in order to be approved as an equivalent during the Submittal Process. If the acceptable alternative manufacturers listed or substitutions are not approved during the Submittal Process due to non-compliance with the contract documents, then the Contractor shall submit product specified.
1. Power Driven Fastener specified product manufacturer:
   a. HILTI FASTENING SYSTEMS.
2. Metal Framing Anchor specified product manufacturer:
   a. SIMPSON STRONG-TIE COMPANY.
   b. Acceptable alternative manufacturers:
      1) Manufacturers of Alternative Metal Framing Anchors shall have Model Code Research Evaluation Reports and Published allowable design loads that are determined from empirical data, or by rational engineering analysis, that are demonstrated by comprehensive testing performed by a qualified testing agency acceptable by the Architect or its Designated Design Consultant, and DSA.
3. Metal Timber Framing Connector specified product manufacturer:
   a. SIMPSON STRONG-TIE COMPANY.
   b. Acceptable alternative manufacturers:
      1) Do not substitute connectors manufactured by others than SIMPSON STRONG-TIE COMPANY without prior written review by the Architect or its Designated Design Consultant, and DSA.

B. Products from other manufacturers not listed must submit in accordance with Specification Section - SUBSTITUTION PROCEDURES.

2.2 MATERIALS

A. Wood:
1. Douglas Fir - Larch:
   a. Standards and Requirements: In accordance with WCLIB “Standard Grading and Dressing Rules” No. 17, latest edition, and WWPA “Western Lumber Grading Rules”, latest edition.
      1) All wood shall be “DRY” and having a moisture content of less than 19 percent at the time of installation, in accordance with WWPA.
      2) Provide wood of S4S unless otherwise noted.

3) Factory mark each piece of wood with the grade stamp of the grading agency.

b. Grading and Use Requirements:

Item	Sizes	Grade	Maximum Moisture Content at Initial Use (Installation)
Studs	2x	No. 1	19%
Studs	3x, 4x, 6x	No. 1	19%
Sills & Plates	2x	No. 1	19%
Sills & Plates	3x, 4x, 6x	No. 1	19%
Beams	4x, 6x	No. 1	19%
Joists	2x	No. 1	19%
Posts	4x, 6x, 8x	No. 1	19%
Ledgers	2x	No. 1	19%
Ledgers	3x, 4x, 6x	No. 1	19%
Blocking	2x, 3x, 4x, 6x	No. 1	19%
Sheathing and Stripping	Up to 1-1/2” thick 2” width and wider	No. 1	19%
Stripping	2x, 3x, 4x, 6x	No. 1	19%
Nailers & Grounds	2x, 3x, 4x, 6x	No. 1	19%
Furring	2x, 3x, 4x, 6x	No. 1	19%
T & G Decking	2x	Select Dex	15%

1) “At initial use" shall be that point at which screws or other fasteners or the holes for said fasteners are installed into the wood.

2) The Contractor shall use whatever means necessary, including site drying to ensure that the moisture contents listed above are not exceeded.

B. Plywood:

1. Soft Plywood:

a. Standards and Requirements: In accordance with PS1, Group 1 Douglas-Fir and PS2-04.

1) Factory mark each piece of plywood with the APA Grade Stamp.

2) Maximum Moisture Content at Initial Use (Installation) shall be 15 percent.

b. Grading and Use Requirements:

1) Wall, Roof, and Parapet Sheathing:

a) APA Rated Sheathing - Structural 1.

b) Span Rating as required to suit stud or joist spacing.

c) Exposure Durability Classification - Exposure 1.

d) Species Group 1.

e) Grade C-C 3 ply for 1/4 inch thickness and C-D 5 ply for 1/2 and 5/8 inch thickness.

2) Equipment Platform Sheathing:

a) APA Rated "Sturdi-Floor".

b) Span Rating as required to suit joist spacing.

c) Exposure Durability Classification - Exposure 1.

d) Species Group 1.

e) Grade C-C plugged.

3) Backing panels for Electrical Equipment.

a) APA Rated Sheathing - Structural 2.

b) Exposure Durability Classification - Exterior.
c) Species Group 1.
d) Grade C-C.
e) Shall be 3/4 inch minimum thickness.

4) Backing panels for Telecommunication Equipment:
a) APA Rated Sheathing - Structural 2.
b) Exposure Durability Classification - Exterior .
c) Species Group 1.
d) Grade A-B.
e) Shall be 3/4 inch minimum thickness.

2.3 FINISHES

A. Preservative Treatment:
1. Pressure Treat Wood and Plywood, with CARB Complying, EPA Registered, preservatives in accordance with AWPA Standards “U”, “T”, and “P”.
   a. Do not use material that does not comply with the requirements for untreated material.
   b. After treatment, kiln-dry wood to a maximum moisture content of 19 percent.
   c. After treatment, dry plywood to a maximum moisture content of 15 percent.
   d. Factory mark each treated item with the treatment quality mark of an Independent Inspection Agency approved by the ALSC Treated Wood Program.
2. Non-pressure treat Wood and Plywood, with CARB Complying, EPA Registered preservatives in accordance with AWPA Standards “U”, “T”, “P” and “N”.

B. Fire Retardant Treatment:
1. Fire Retardant Treat Wood and Plywood with pressure treatment materials that comply with performance requirements of AWPA C20 for Wood and AWPA C27 for Plywood.
   a. Use Exterior Type.
   b. Use treatment for which chemical manufacturer publishes physical properties of treated wood after exposure to elevated temperatures when tested by a qualified independent testing agency and is acceptable to Fire and Life Safety authorities.
   c. Use treatment that does not promote corrosion of metal fasteners.
   d. After treatment, kiln-dry wood to a maximum moisture content of 19 percent.
   e. After treatment, dry plywood to a maximum moisture content of 15 percent.
   f. Factory mark each treated item with the treatment quality mark of an Independent Inspection Agency.

2.4 ACCESSORIES

A. Fasteners: All types shall comply with standards and dimensions of the latest edition of NDS. All types of fasteners exposed to wet or exterior conditions, in-ground contact, in pressure or preservative treated woods, in concrete or masonry, or in an area of high relative humidity shall be hot-dipped galvanized in accordance with ASTM A 153 "Specification for Zinc Coating (Hot Dip) on Iron and Steel Hardware".
1. Nails: Common wire nails or spikes complying with ASTM F 1667 "Specification for Friven Fasteners: Nails, Spikes, and Staples", and CBC Section 2304.1 . Box nails and sinker nails are not permitted. Vinyl coating is permitted on common nails.
2. Bolts: Steel bolts complying with ASTM A 307 "Specification for Carbon Steel Bolts and Stds, 60,000 PSI Tensile Strength", Grade A, hex head.

a. Provide hex head nuts complying with ASTM A 307 "Specification for Carbon Steel Bolts and Stds, 60,000 PSI Tensile Strength", and standard flat washers complying with ANSI/ASME B18.22.1, Type A, Wide pattern.

3. Lag Bolts: Shall comply with ANSI/ASME B18.2.1, hex head.
   a. Provide standard flat washers complying with ANSI/ASME B18.22.1, Type A, Wide pattern.
4. Wood Screws: Shall comply with ANSI/ASME B18.6.1.
   a. Screws for fastening wood to Metal Framing shall comply with ASTM C 954 "Specification for Steel Drill Screws for the Application of Gypsum Panel Products or Metal Plaster Bases to Steel Studs from 0.033 in. (0.84 mm) to 0.112 in. (2.84 mm) in Thickness".
5. Power Driven Fasteners: Tempered Steel pins with corrosive resistant plating or coating complying with ICC ESR-1539.

B. Metal Framing Anchors: All anchors shall comply with ASTM A 653 "Specification for Steel Sheet, Zinc-Coated (Galvanized) or Zinc-Iron Alloy-Coated (Galvannealed) by the Hot-Dip Process", G60 Coating Designation for hot-dipped zinc-coated steel sheet. Provide structural, commercial, or lock-forming quality as standard with manufacturer for type of anchor indicated.

C. Metal Timber Framing Connectors: All connectors shall have specific ICC Approval and be fabricated from hot-dipped galvanized steel.

PART 3 - EXECUTION

3.1 EXAMINATION

A. Site verification of conditions:
1. Prior to the execution of the work under this specification section, inspect the installed work executed under other sections of this Project Manual, which affect the execution of work under this specification section.
2. Report unacceptable conditions to the Architect. Do not begin work until unacceptable conditions have been corrected.
3. Execution of work under this specification section shall constitute acceptance of existing conditions.
4. Verify that work under this Section may be performed in strict accordance with the original design and all pertinent codes and regulations.

3.2 PREPARATION

A. Coordination:
1. Coordinate work under this specification section with work specified under other sections to ensure proper and adequate interface of work.

B. Protection:
1. Protect all materials from damage occurring from work called for under this specification section.

C. Preservative Treatment:

1. Members requiring pressure treatment:
    a. Sills, Plates, Ledgers, Studs, Joists, Blocking, Nailers and Furring attached or resting on or against concrete or masonry construction.
    b. Pressure treated members cut in the field shall have the cut ends painted with preservative until the wood or plywood absorbs no more preservative.
2. Members requiring field treatment:
    a. All wood and plywood members at exterior walls within two feet of the ground surface.
    b. Treat all surfaces of the member.
    c. Treat by dipping the required portion of the member into preservative for 15 minutes or paint until the wood or plywood absorbs no more preservative. Wait a minimum of two hours after dipping or painting is complete to incorporate member into project.
    d. Test treat items for compatibility where additional finish coats (stain or paint) may occur.

D. Fire Retardant Treatment:
1. All wood and plywood members as indicated.
2. All plywood panels for Telecommunication Equipment.

3.3 INSTALLATION

A. General:
1. In accordance with manufacturer’s instructions and recommendations unless specifically noted otherwise.
2. In accordance with approved submittals.
3. In accordance with Regulatory Requirements.
4. Selection of wood and plywood pieces:
    a. Carefully select all members.
    b. Select individual pieces so that knots and obvious defects will not interfere with placing bolts, proper nailing, and making proper connections.
    c. Cut out and discard all defects which will render a piece unable to serve its intended function.
    d. Wood and plywood may be rejected by the Architect or its Designated Design Consultant, and DSA whether or not it has been installed for excessive warp, twist, bow, crook, mildew, fungus, or mold as well as for improper cutting, fitting and treatment when required.
5. All wood and plywood shall be accurately cut to lengths required.
6. All work shall produce joints true, tight, level, plumb, and all members are securely anchored.
    a. Do not shim any framing member.

B. Layout:
1. Lines shall be straight and true.

C. Fastening:
1. Nails:
    a. All nailing shall be as required by CBC Table 2304.10.1 "Fastening Schedule".
    b. Machine nailing may be approved subject to the approval of the Architect or its Designated Design Consultant, and DSA.

1) The use of machine nailing is subject to a satisfactory job site demonstration for each project. The approval is subject to continued satisfactory performance.
2) In plywood, if the nail heads penetrate beyond flush with the surface of the sheathing, or if minimum allowable edge distances are not maintained, the performance will be deemed unsatisfactory.
3) Machine nailing will not be accepted in 5/16” plywood.

c. Penetration of nails or spikes shall be one-half the length of the nail or spike into the piece receiving the point.
d. 16d nails shall be used to connect pieces 2” in thickness unless otherwise indicated.
e. Clinch nails protruding through members.
f. Bore holes for nails where necessary to prevent splitting.
g. Use Finish or Casing Nails for finish work.

2. Lag Bolts:
   a. Lag Bolts shall be screwed into place. No driving is allowed.
   b. For the Shank portion, holes shall be bored the same depth and diameter as the shank. For threaded portion, holes shall be between 60% and 75% of the shank diameter.
   c. Malleable Iron or Steel plate washers shall be used where bolt heads bear on wood or plywood. Washers shall have an area equal to 16 times the area of the bolt.
      1) Steel plate washers shall have a thickness not less than 1/10 the length of the washer’s longest side.
      2) Malleable Iron washers shall have a bearing surface for the head equal in diameter to not less that the long diameter of the head.
   d. Tighten all bolts and screws prior to concealing within structure.
3. Bolts:
   a. Holes shall be 1/16” larger than bolt diameter.
   b. Malleable Iron or Steel plate washers shall be used where bolt head and nuts bear on wood or plywood. Washers shall have an area equal to 16 times the area of the bolt.
      1) Steel plate washers shall have a thickness not less than 1/10 the length of the washer’s longest side.
      2) Malleable Iron washers shall have a bearing surface for the head or nut equal in diameter to not less that the long diameter of the head or nut.
   c. Tighten all bolts prior to concealing within structure.
4. Power Driven Anchors
   a. Fastening shall be accomplished by low-velocity piston-driven power activated tool.
   b. Pins shall have guide washers to accurately control penetration.
5. Expansion Anchors (Post-Installed Concrete Anchors):
   a. Refer to Specification Section - DRILLED ANCHORS.
6. Metal Framing Anchors
   a. Use half-length nails where required or indicated.
7. Metal Timber Framing Connectors
   a. Nailing shall conform to manufacturer’s instructions with a nail provided for each punched hole.

D. Sills:
   1. Shall be in long lengths of sizes as indicated.
   2. Fasten with a minimum of two (2) anchor bolts per piece and bolt within 9”, but not nearer than 6”, from the end of piece.

3. Malleable iron or steel plate washers shall be placed under anchor bolt nuts bearing on wood.
4. Set Sill level and true.

E. Studs and Posts:
   a. Shall be full length.
2. Cut members to provide full bearing at ends.

F. Plates:
1. Shall be in long lengths and spliced as indicated.

G. Joists and Beams:
1. Shall be in long lengths and spliced over bearings unless otherwise indicated. Do not overcut.
2. Install with crown side up.
3. Beams or headers indicated to be built-up of two or more joists shall be constructed on the project site using full length members.

H. Blocking:
1. Blocking shall be same thickness and width of studs or joists unless otherwise indicated.
2. Install blocking at all wall, floor, or roof penetrations.
   a. Blocking shall provide surface for fastening applied interior or exterior flashings or flanges.
3. Install blocking at all plywood joints.
   a. Install blocking at plywood edges including crickets and parapet wall bracing.
4. Shall be provided for all fixtures, equipment, casework, toilet partitions, toilet accessories, handrails, visual display boards, identifying devices, finish hardware, flashing, wall and ceiling finishes, and other items as indicated. See also Specification Section - OWNER FURNISHED ITEMS for listing of N.I.C. items that will require blocking coordination.
   a. Coordinate placement of blocking and supports with manufacturer or supplier of items.
5. Fireblocking shall be provided to cut off all horizontal and vertical concealed draft openings in accordance with CBC Section 717.2.
   a. Horizontal Fireblocking in walls shall be typically placed at 4’-0” above finished floor, at 8’-0” above finished floor, at mezzanine floor plane unless otherwise indicated, and at ceiling line plane.
6. Bridging shall be installed in all joist members deeper than 8 inches unless otherwise indicated.
   a. Bridging shall extend the full depth of the joists.
   b. Drill bridging within attics to provide ventilation as indicated.

I. Plywood Sheathing Panels:
1. For panels with different veneer face grades, the exposed face shall always be the higher grade.
2. Space panels 1/8 inch at all edge and end joints, and in accordance with APA.
3. Panels shall be applied with the long dimension (or strength axis) across the framing.
4. Fasten from the field of the panel first and then to the ends and edges to reduce stressing of the panel surfaces.
5. Center all joints over bearing supports.

6. Wall panels shall continue uninterrupted by ceilings or soffits from floor to floor or roof unless otherwise indicated.

J. Nailers and Grounds:
1. Shall be installed as indicated and where required for attaching other work.
2. Form to shapes indicated.
3. Coordinate locations with other work involved.
4. Provide nailers at all flashing and edge terminations when required by roofing manufacturer for metal and concrete roof decks. When the roof system is required to be Class A use fire-retardant treated wood.

K. Furring and Stripping
1. Shall be installed as indicated and where required to provide fastening material or space for the passage of pipes, conduits, etc. not accommodated including ceiling stripping.

L. Sealant:
1. When indicated, Primer shall be in accordance with sealant manufacturer recommendations.
2. When indicated, Joint Sealer shall be in accordance with Specification Section - SEALANTS.

3.4 CONSTRUCTION

A. Draftstopping:
1. Shall be provided in floor, attic, and ceiling areas in accordance with CBC Section 718.3 and 718.4.

B. Pipes:
1. Frame to avoid cutting or drilling for passage of pipes, ducts, and conduit.
2. Follow criteria as indicated for cutting or drilling. Unusual edge distances and awkward spacing and sizes shall be brought to the Architects attention for remedy.

C. Chimneys and Flues:
1. Keep all framing 2 inches away from chimney or flues in accordance with CBC Section 2304.5.

D. Cant Strips and Crickets:
1. Shape to sizes indicated.
2. Rigidly fasten to construction.
3. Block all joints of plywood panel construction.
4. Form neat and mitered corners.

E. Temporary Enclosures:
1. Provide and maintain all baricades and enclosures required to protect the work in progress.

F. Shoring or Bracing:
1. Shore or brace for temporay support of all work as required during the construction period except any shoring and bracing specified and included under other sections of this Project Manual.

G. Wood Curbs for Equipment:
   1. Construct all wood curbs for roof mounted equipment.
   2. Provide all miscellaneous blocking, bracing, supports, and other wood items to complete the work.

3.5 FIELD QUALITY CONTROL

A. Site Tests:
   1. As required by Regulatory Requirements.
   2. Project Inspector shall verify by means of a handheld moisture content meter that all wood and plywood supplied at the time of incorporation into structure(s) has met applicable moisture content requirements.
   3. Project Inspector shall test all stud cavity walls to ensure that studs are a maximum of 19 percent moisture content prior to any other construction that encloses the wall cavity.

B. Inspection:
   1. As required by Regulatory Requirements.
   2. Schedule inspections and notify the Architect, Project Inspector and any other regulatory agencies of the time at least 48 hours prior to the inspection.
   3. No work shall be without the inspections required by Regulatory Requirements.

3.6 CLEANING

A. Removal of Debris:
   1. Remove all Wood, including form lumber, chips, shavings and sawdust in or on the ground from the areas inside buildings. Do not bury debris in fill.

END OF SECTION

SECTION 061713 – COMPOSITE LUMBER

PART 1 - GENERAL

1.1 SUMMARY

A. This Section includes the following:
   1. Provide all material, labor, equipment and services necessary to completely install all Structural Composite Lumber (SCL) materials, accessories and other related items necessary to complete the Project as indicated by the Contract Documents.“
      a. "Composite Lumber" is also known as “Structural Glued Lumber”, and requires a Grade Stamp indicating that it is “Certified Glued Lumber” – (CGL).

B. Related Sections: The following Project Manual Sections contain requirements that relate to this section:
   1. ALL DIVISION 00 SPECIFICATION SECTIONS.
   2. ALL DIVISION 01 SPECIFICATION SECTIONS.
   3. 05 12 00 STEEL AND FABRICATIONS
   4. 06 10 00 ROUGH CARPENTRY
   5. 06 17 33 WOOD JOISTS
   6. 06 18 00 GLUE-LAMINATED CONSTRUCTION
   7. ALL SPECIFICATION SECTIONS IN THE FACILITY SERVICES SUBGROUP.
   8. ALL SPECIFICATION SECTIONS IN THE SITE AND INFRASTRUCTURE SUBGROUP.

1.2 REFERENCES

A. Standards:
   1. In accordance with the following standards:
      a. ICC International Code Council
      b. NDS National Design Specification for Wood Construction
      c. NIST National Institute of Standards and Technology
      d. PS Product Standard; of the US Department of Commerce

1.3 SUBMITTALS

A. Submit in accordance with Specification Section - SUBMITTAL PROCEDURES:
   1. Product Data:
      a. Indicate SCL material and dimensions and include construction and application details.
   2. Shop Drawings:
      a. Submit shop drawings detailing fabrication and installation of the work under this section, as well as procedures, diagrams, and attachment to other units of work.
   3. Quality Assurance Submittals:
      a. Reports:
         1) Submit product ICC Evaluation Reports.
         2) Submit DSA Product Acceptance Report.

b. Certificates:
   1) Provide document indicating Manufacturing facility has met the approval of an independent ICC Approved Inspection Agency.
   2) Provide Accredited Grade Stamps indicating “Certified Glued Lumber” - CGL.
   3) Provide document indicating 3 projects of similar size that the proposed installer has successfully completed.

4. Closeout Submittals:
   a. Warranty in accordance with Specification Section –WARRANTIES.
   b. Project "AS-BUILT" Documents and Project "RECORD" Documents.

1.4 QUALITY ASSURANCE

A. Qualifications:
   1. Material Qualifications:
      a. All materials shall be in accordance with ASTM Requirements, ICC Evaluation Reports, DSA Product Acceptance Reports and manufacturers engineering requirements.
         1) Composite Lumber shall be designated “Certified Glued Lumber” (CGL) and grade stamped by an inspection agency accredited by the American Lumber Standard Committee (ALSC) to supervise glued lumber manufacturing, in accordance with IR 23-10.
            a) CGL shall be graded in conformance to ALSC Glued Lumber Policy (GLP) and Voluntary Product Standard PS 20-99 or current standard.
   2. Installer Qualifications:
      a. Engage an experienced Installer who has successfully completed three (3) projects of similar scope and size to that indicated for this Project.
   3. Manufacturer/Supplier Qualifications:
      a. Firm experienced in successfully producing and supplying products indicated for this Project, with sufficient capacity to supply required units without causing delay in the work.
      b. Manufacturing facility shall be approved by an independent ICC approved inspection agency.
      c. Obtain each type of product through one source from a single manufacturer.

B. Regulatory Requirements:
   1. In accordance with Specification Section - REGULATORY REQUIREMENTS, and the following:
      a. CARB Materials and equipment used for this Project shall comply with the current applicable regulations of the California Air Resources Board (CARB) and the Environmental Protection Agency (EPA), in the area where the project is located.

C. Meetings:
   1. Pre-Installation: Scheduled by the Contractor prior to the start of work.
      a. Coordinate the work with other work being performed.
      b. Identify any potential problems that may impede planned progress and proper installation of work regarding quality of installation and warranty requirements.
   2. Progress: Scheduled by the Contractor during the performance of the work.
      a. Review for proper installation of work progress.

b. Identify any installation problems and acceptable corrective measures.
c. Identify any measures to maintain or regain project schedule if necessary.

3. Completion: Scheduled by the Contractor upon proper completion of the work.
   a. Inspect and identify any problems that may impede issuance of warranties or guaranties.
   b. Maintaining installed work until the Notice of Substantial Completion has been executed.

1.5 DELIVERY, STORAGE, AND HANDLING

A. Packing, shipping, handling, and unloading:
   1. Products shall be handled in such a manner as to assure that they are free from gouges, scratches and other damage.

B. Acceptance at Site:
   1. Products must be in the approved manufacturer's packaging with labels indicating brand name, size, and grade.
   2. Damaged products will not be accepted.

C. Storage and protection:
   1. Products shall be stored vertically above ground on level platforms, six (6) inches above ground, allowing air circulation under stacked units.
      a. Cover materials with protective waterproof covering providing for adequate air circulation and ventilation.

1.6 PROJECT CONDITIONS

A. Existing Conditions:
   1. Examine site and compare it with the drawings and specifications. Thoroughly investigate and verify conditions under which the work is to be performed. No allowance will be made for extra work resulting from negligence or failure to be acquainted with all available information concerning conditions necessary to estimate the difficulty or cost of the work.
   2. Field Measurements: Take and be responsible for field measurements as required. Report any significant differences between field dimensions and the contract document conditions to Architect.
   3. Carefully coordinate work under this Section with that of the structural framing sections and details so that the interface between structural framing and non structural framing shall provide the lines and degree of finish shown and specified.

1.7 WARRANTY

A. Contractor's General Warranty:
   1. In accordance with Specification Section - WARRANTIES.

B. Manufacturer's Warranty:
   1. In accordance with manufacturer's written standard warranty:
      a. Warranty Period One (1) Year.

C. Installer's Warranty:
1. In accordance with the terms of the Specification Section - WARRANTIES
a. Warranty Period One (1) Year.

PART 2 - PRODUCTS

2.1 MANUFACTURERS

A. These products listed herein establish the size, pattern, color range and function selected by the Architect for this Project. Manufacturers that are listed as acceptable alternative manufacturers and substitutions must still comply with the requirements of this project and the products listed in order to be approved as an equivalent during the Submittal Process. If the acceptable alternative manufacturers listed or substitutions are not approved during the Submittal Process due to non-compliance with the contract documents, then the Contractor shall submit product specified.
1. Specified product manufacturer:
a. REDBUILT, A WEYERHAUSER BUSINESS:
1) Laminated Veneer Lumber (LVL) "RedLam".

B. Products from other manufacturers not listed must submit in accordance with Specification Section - SUBSTITUTION PROCEDURES.
1. Other manufacturer's products complying with these specifications and having equivalent properties and dimensions shall be subject to Architect's and DSA's review upon submission of substantiating data. Structural capacities shall be evaluated by ASTM D 2559 "Specification for Adhesives for Structural Laminated Wood Products for Use Under Exterior (Wet Use) Exposure Conditions", ASTM D 5456 "Specification for Evaluation of Structural Composite Lumber Products", and independent structural testing. DSA Product Approval is required for all substitutions.

2.2 MATERIALS

A. Wood:
1. Species: Use Douglas Fir, Lodge-Pole Pine, or Western Hemlock.

B. Adhesive:
1. Adhesives shall be exterior type and in compliance with ASTM D 2559 "Specification for Adhesives for Structural Laminated Wood Products for Use Under Exterior (Wet Use) Exposure Conditions".

2.3 MANUFACTURED UNITS

A. Laminated Veneer Lumber (LVL):
1. Prefabricated in accordance with DSA PA-045, ICC Evaluation Service Report ESR-299, and ASTM D 5456 "Specification for Evaluation of Structural Composite Lumber Products".

2.4 ACCESSORIES

A. Fasteners: Refer to Specification Section – ROUGH CARPENTRY.

B. Metal Framing Anchors: Refer to Specification Section – ROUGH CARPENTRY.

C. Metal Timber Framing Connectors: Refer to Specification Section – ROUGH CARPENTRY.

2.5 SOURCE QUALITY CONTROL

A. Fabrication Tolerances:
1. Fabrication shall be in compliance with specified standard and industry specifications and requirements of the ICC Evaluation Service Report.
a. Fabrication shall be in accordance with best practices with adequate plant and equipment and under supervision of properly qualified personnel and at plant stated in listing report.
b. Moisture content of components at time of gluing shall not be less than 7 percent nor more than 16 percent.

B. Tests, Inspection:
1. Manufacturing facility shall be approved by an independent ICC approved inspection agency.

C. Identification:
1. All joists shall bear a stamp indicating the manufacturer's name and / or logo, the logo of the Inspection Agency, the ICC Evaluation Service Report Number, the plant number, the product type, production date, the grade, and species.

PART 3 - EXECUTION

3.1 EXAMINATION

A. Site verification of conditions:
1. Prior to the execution of the work, inspect the installed work executed under other specification sections, which affect the execution of work under this specification section.
2. Report unacceptable conditions to the Architect. Do not begin work until unacceptable conditions have been corrected.
3. Execution of work under this specification section shall constitute acceptance of existing conditions.

3.2 PREPARATION

A. Coordination:
1. Coordinate work under this specification section with work specified under other specification sections to ensure proper and adequate interface of work.

B. Protection:

1. Protect all adjacent surfaces from damage from work under this specification section.

3.3 ERECTION

A. General:
   1. Members are to be erected and installed in accordance with the drawings and manufacturers recommendations. Comply with all manufacturers recommendations concerning temporary construction loads and erection bracing.
      a. Temporary construction loads that cause stresses beyond design limits are not permitted. Safety bracing is to be provided by the installer to keep SCL members straight and plumb as required and to ensure adequate lateral support for the individual SCL members and the entire system until the sheathing material has been applied.
      b. The Contractor shall give notification to the SCL manufacturer's representative, prior to enclosing the framing, to provide an opportunity for review of the installation.
   2. LVL members shall not be bored, drilled, cut, or notched without approval of the Architect and the Structural Engineer.
   3. In accordance with approved shop drawings.
   4. In accordance with Regulatory Requirements.
   5. Set plumb, level, and square.
   6. Damaged products shall not be installed.

B. Layout:
   1. Lines shall be straight and true.

3.4 CLEANING

A. Clean in accordance with Specification Section - PROJECT CLOSEOUT.
   1. Keep premises free from accumulated waste materials, rubbish and debris resulting from this work. Upon completion, remove tools, appliances, surplus materials, waste materials, rubbish, debris and accessory items used in or resulting from said work, and legally dispose of off the site.

END OF SECTION

SECTION 061733 – WOOD JOISTS

PART 1 - GENERAL

1.1 SUMMARY

A. This Section includes the following:
   1. Provide all material, labor, equipment and services necessary to completely install all Wood Joist materials, accessories and other related items necessary to complete the Project as indicated by the Contract Documents, and as follows:
      a. All Wood Joists, joist blocking, bridging, etc., for the installation of joists.
      b. Clips, angles, straps, hangers, etc., incidental to installation of joists.
      c. Nails, bolts, washers and other fasteners used for erecting and securing Wood Joists.

B. Related Sections: The following Project Manual Sections contain requirements that relate to this section:
   1. ALL DIVISION 00 SPECIFICATION SECTIONS.
   2. ALL DIVISION 01 SPECIFICATION SECTIONS.
   3. 05 12 00 STEEL AND FABRICATIONS
   4. 06 10 00 ROUGH CARPENTRY
   5. 06 17 13 COMPOSITE LUMBER
   6. 06 18 00 GLUE-LAMINATED CONSTRUCTION
   7. 07 21 00 INSULATION
   8. 09 50 00 ACOUSTICAL CEILINGS
   9. ALL SPECIFICATION SECTIONS IN THE FACILITY SERVICES SUBGROUP.
   10. ALL SPECIFICATION SECTIONS IN THE SITE AND INFRASTRUCTURE SUBGROUP.

1.2 REFERENCES

A. Standards:
   1. In accordance with the following standards:
      a. ICC International Code Council
      b. NDS National Design Specification for Wood Construction
      c. NIST National Institute of Standards and Technology
      d. PS Product Standard; of the US Department of Commerce

1.3 SUBMITTALS

A. Submit in accordance with Specification Section - SUBMITTAL PROCEDURES:
   1. Product Data.
      a. Indicate wood joist material and dimensions and include construction and application details.
   2. Shop Drawings.

a. Submit shop drawings prepared by, or under the supervision of, a registered Civil or Structural Engineer in the State of California. Detail fabrication and installation of the work under this section, as well as procedures, diagrams, and attachment to other units of work. Each Drawing Sheet shall be stamped and signed by said engineer.

3. Quality Assurance/Control Submittals:
   a. Reports:
      1) Submit product ICC Evaluation Reports in accordance with DSA IR 23-9.10.
   b. Certificates:
      1) Provide document indicating Manufacturing facility has met the approval of an independent ICC Approved Inspection Agency.
      2) Provide document indicating 3 projects of similar size that the proposed installer has successfully completed.
   c. Manufacturer's Field Installation Review Reports:
   d. Engineering Calculations:
      1) Submit Engineering Calculations computed, stamped, and signed by a registered Civil or Structural Engineer in the State of California.
4. Closeout Submittals:
   a. Warranty in accordance with specification section –WARRANTIES.
   b. Project "AS-BUILT" Documents and Project "RECORD" Documents.

1.4 QUALITY ASSURANCE

A. Qualifications:
   1. Material Qualifications:
      a. All materials shall be in accordance with ASTM Requirements, ICC Evaluation Reports compliant with DSA IR 23-9.10, and manufacturers engineering requirements.
   2. Installer Qualifications:
      a. Engage an experienced Installer who has successfully completed three (3) projects of similar scope and size to that indicated for this Project.
   3. Manufacturer/Supplier Qualifications:
      a. Firm experienced in successfully producing and supplying products indicated for this Project, with sufficient capacity to supply required units without causing delay in the work.
      b. Manufacturing facility shall be approved by an independent ICC approved inspection agency.
      c. Capable of providing competent on-site review of product installation and written verification of compliance with installation requirements.
      d. Obtain each type of product through one source from a single manufacturer.

B. Regulatory Requirements:
   1. In accordance with Specification Section - REGULATORY REQUIREMENTS, and the following:
      a. CARB Materials and equipment used for this Project shall comply with the current applicable regulations of the California Air Resources Board (CARB) and the Environmental Protection Agency (EPA), in the area where the project is located.
      b. DSA IR Division of the State Architect, Interpretation of Regulations.

1) Including DSA IR 23-9.10 "Prefabricated Wood I-Joist: 2016, 2013, and 2010 CBC."

C. Meetings:
1. Pre-Installation: Scheduled by the Contractor prior to the start of work.
   a. Coordinate the work with other work being performed.
   b. Identify any potential problems that may impede planned progress and proper installation of work regarding quality of installation and warranty requirements.
2. Progress: Scheduled by the Contractor during the performance of the work.
   a. Review for proper installation of work progress.
   b. Identify any installation problems and acceptable corrective measures.
   c. Identify any measures to maintain or regain project schedule if necessary.
3. Completion: Scheduled by the Contractor upon proper completion of the work.
   a. Inspect and identify any problems that may impede issuance of warranties or guaranties.
   b. Maintaining installed work until the Notice of Substantial Completion has been executed.

1.5 DELIVERY, STORAGE, AND HANDLING

A. Packing, Shipping, Handling, and Unloading:
1. Products shall be handled in such a manner as to assure that they are free from gouges, scratches and other damage.

B. Acceptance at Site:
1. Products must be in the approved manufacturer's original packaging with labels indicating brand name, size, and grade.
2. Damaged products will not be accepted.

C. Storage and Protection:
1. Products shall be stored above ground on level platforms, six (6) inches above ground, allowing air circulation under stacked units.
   a. Cover materials with protective waterproof covering providing for adequate air circulation and ventilation.

1.6 PROJECT CONDITIONS

A. Existing Conditions:
1. Examine site and compare it with the drawings and specifications. Thoroughly investigate and verify conditions under which the work is to be performed. No allowance will be made for extra work resulting from negligence or failure to be acquainted with all available information concerning conditions necessary to estimate the difficulty or cost of the work.
2. Field Measurements: Take and be responsible for field measurements as required. Report any significant differences between field dimensions and the contract document conditions to Architect.
3. Carefully coordinate work under this Section with that of the structural framing sections and details so that the interface between structural framing and non structural framing shall provide the lines and degree of finish shown and specified.

1.7 WARRANTY

A. Contractor's General Warranty:
1. In accordance with Specification Section - WARRANTIES.

B. Manufacturer's Warranty:
1. In accordance with manufacturer's written standard warranty:
a. Warranty Period One (1) Year.

C. Installer's Warranty:
1. In accordance with the terms of the Specification Section - WARRANTIES
a. Warranty Period One (1) Year.

PART 2 - PRODUCTS

2.1 MANUFACTURERS

A. These products listed herein establish the size, pattern, color range and function selected by the Architect for this Project. Manufacturers that are listed as acceptable alternative manufacturers and substitutions must still comply with the requirements of this project and the products listed in order to be approved as an equivalent during the Submittal Process. If the acceptable alternative manufacturers listed or substitutions are not approved during the Submittal Process due to non-compliance with the contract documents, then the Contractor shall submit product specified.
1. Specified product manufacturer:
a. REDBUILT LLC "RED-I" Series.

B. Products from other manufacturers not listed must submit in accordance with Specification Section - SUBSTITUTION PROCEDURES.
1. Other manufacturer's products complying with these specifications and having equivalent properties and dimensions shall be subject to Architect's and DSA's review upon submission of substantiating data. Structural capacities shall be evaluated by ASTM D 5055 "Specification for Establishing and Monitoring Structural Capacities of Prefabricated Wood I-Joists", and independent structural testing. DSA Product Approval is required for all substitutions as listed in DSA Acceptance Criteria 23-1.

2.2 MATERIALS

A. Flanges:
1. Structural Composite Lumber Flanges shall be in compliance with the requirements of ASTM D 5456 “Specification for Evaluation of Structural Composite Lumber Products”.

B. Webs:
1. Structural panel webs shall be of Oriented Strand Board in compliance with PS2, Exposure 1, or Plywood in compliance with PS1, Exterior Grade.
a. Oriented Strand Board material of I-Joists shall be stamped with the Brand Name, grade, thickness, mill location, and mill number.

C. Adhesives:
1. Adhesives shall be exterior type and in compliance with ASTM D 2559 "Specification for Adhesives for Structural Laminated Wood Products for Use Under Exterior (Wet Use) Exposure Conditions".

2.3 MANUFACTURED UNITS

A. I-Joists:
1. Prefabricated in accordance with ICC Evaluation Service Report ESR-2994, and ASTM D 5055 "Specification for Establishing and Monitoring Structural Capacities of Prefabricated Wood I-Joists".
2. Miscellaneous blocking, bridging, rim joists and web stiffeners, shall be furnished per above listed regulations, references, and standards.

2.4 ACCESSORIES

A. Fasteners: Refer to Specification Section – ROUGH CARPENTRY.

B. Metal Framing Anchors: Refer to Specification Section – ROUGH CARPENTRY.

2.5 SOURCE QUALITY CONTROL

A. Fabrication Tolerances:
1. Fabrication shall be in compliance with specified standard and industry specifications and requirements of DSA AC 23-1 and ICC Evaluation Service Report #ESR-2994.
a. Fabrication shall be in accordance with best practices with adequate plant and equipment and under supervision of properly qualified personnel and at a plant stated in the Listing Report.
b. Moisture content of components at time of gluing shall not be less than 7 percent nor more than 16 percent.
c. Depth: Plus or Minus 1/16".
d. Flange Width: Plus or Minus 1/16".

B. Identification:
1. All joists shall bear a stamp indicating the joist series, ICC-ES Evaluation Report Number, manufacturer's name, plant number, date of fabrication, and independent inspection agency's logo.

PART 3 - EXECUTION

3.1 EXAMINATION

A. Site Verification of Conditions:
1. Prior to the execution of the work, inspect the installed work executed under other specification sections which affect the execution of work under this specification section.
2. Report unacceptable conditions to the Architect. Do not begin work until unacceptable conditions have been corrected.

3. Execution of work under this specification section shall constitute acceptance of existing conditions.

3.2 PREPARATION

A. Coordination:
1. Coordinate work under this specification section with work specified under other sections to ensure proper and adequate interface of work.

B. Protection:
1. Protect all adjacent surfaces from damage from work under this specification section.

3.3 ERECTION

A. General:
1. Joists are to be erected and installed in accordance with the drawings and manufacturers recommendations. Comply with all manufacturer's written recommendations concerning temporary construction loads and erection bracing.
   a. Temporary construction loads that cause stresses beyond design limits are not permitted. Safety bracing shall be provide by the installer to keep the joists straight and plumb as required and to ensure adequate lateral support for the individual joists and the entire system until sheathing material has been applied.
   b. The Contractor shall give notification to the joist manufacturer's representative, prior to enclosing the joists, to provide an opportunity for review of the installation.
2. In accordance with approved shop drawings.
3. In accordance with Regulatory Requirements.
4. Set plumb, level, and square.
5. Use equipment and methods that avoid damages that may impair strength of Wood I-Joists joists. Sharp instruments and unprotected wire rope, chain slings and the like shall not be permitted.
6. Damaged products shall not be installed.

B. Layout:
1. Lines shall be straight and true.

3.4 FIELD QUALITY CONTROL

A. Inspection:
1. As required by Regulatory Requirements.
2. Manufacturer's representative shall provide on-site Field Installation Review Report indicating compliance with manufacturer's requirements.

3.5 CLEANING

A. Clean in accordance with Specification Section - PROJECT CLOSEOUT.

1. Keep premises free from accumulated waste materials, rubbish and debris resulting from this Work. Upon completion, remove tools, appliances, surplus materials, waste materials, rubbish, debris and accessory items used in or resulting from said Work, and legally dispose of off the site.

END OF SECTION

INTENTIONALLY LEFT BLANK

SECTION 061800 – GLUE-LAMINATED CONSTRUCTION

PART 1 - GENERAL

1.1 SUMMARY

A. This Section includes the following:
   1. Provide all material, labor, equipment and services necessary to furnish and install all Glue-Laminated Structural Units, accessories and other related items necessary to complete the Project as indicated by the Contract Documents unless specifically excluded.

B. Related Sections: The following Sections contain requirements that relate to this Section:
   1. ALL DIVISION 00 SPECIFICATION SECTIONS.
   2. ALL DIVISION 01 SPECIFICATION SECTIONS.
   3. 05 12 00 STEEL AND FABRICATIONS (Hangers, Angles, Plates and Bolts)
   4. 06 10 00 ROUGH CARPENTRY
   5. 06 17 13 COMPOSITE LUMBER
   6. 09 91 00 PAINTING
   7. ALL SPECIFICATION SECTIONS IN THE FACILITY SERVICES SUBGROUP.
   8. ALL SPECIFICATION SECTIONS IN THE SITE AND INFRASTRUCTURE SUBGROUP.

1.2 REFERENCES

A. Standards:
   1. In accordance with the following standards:
      a. AITC American Institute of Timber Construction "Standard Specification for Structural Glued Laminated Timber of Softwood Species, (AITC 117-latest edition).
      b. ALSC American Lumber Standards Committee.
      c. ANSI American National Standards Institute ANSI A 190.1, "Structural Glued Laminated Timber".
      d. APA The Engineered Wood Association (Formerly the American Plywood Association).
      e. AWPA American Wood-Preservers' Association.
      f. WCLA West Coast Lumbermen's Association.
      g. WCLIB West Coast Lumber Inspection Bureau.

1.3 SUBMITTALS

A. Submit Shop Drawings in accordance with Specification Section – SUBMITTAL PROCEDURES.

B. Quality Assurance/Control Submittals:
   1. Test Reports:
      a. Submit four (4) copies of reports.

2. Submit verified report by an approved Glue Fabrication Inspector that all units have been fabricated in accordance with CBC Section 2303.1.3.
3. Submit Independent Testing Lab Reports for all materials delivered to the project.

1.4 QUALITY ASSURANCE

A. Regulatory Requirements:
1. In accordance with Specification Section - REGULATORY REQUIREMENTS, and the following:
   a. CARB Materials and equipment used for this Project shall comply with the current applicable regulations of the California Air Resources Board (CARB) and the Environmental Protection Agency (EPA), in the area where the project is located.
   b. DSA Division of the State Architect
   c. UL Underwriter's Laboratories
   d. USCS U.S. Commercial Standards

B. Inspection:
1. All structural glued-laminated timber shall be continuously inspected during fabrication by a glue fabrication inspector specially approved for that purpose by the enforcement agency (DSA/SSS).
   a. Costs of inspection will be paid by Owner.
   b. An AITC Certificate will not meet this requirement.

C. Identification:
1. Each structural glued-laminated timber shall be stamped with an identifying mark.
   a. The glue fabrication inspector shall make a verified report identifying the timbers by mark and including pertinent data such as the grade and species of lumber, the type of glue, the extremes of moisture content, and such other information as may be required.
   b. The glue fabrication inspector's verified report shall show, of his/her own personal knowledge, the work covered by the report has been performed and materials used and installed in every material respect in accordance with and in conformity to the duly approved plans and specifications.
   c. The verified report shall either certify the use of official grading bureau marks as required, or that lumber grades were determined by a grader authorized to grade lumber under the provisions of the American Lumber Standards Committee and who is also trained to grade the tension laminations required and described in ANSI/AITC A190.1 and ASTM D 3737 "Practice for Establishing Allowable Properties for Structural Glued Laminated Timber (Glulam)".
2. All members shall be fabricated with exterior type glues for "wet use".

1.5 WARRANTY

A. Contractor's General Warranty:
1. In accordance with Specification Section - WARRANTIES.

B. Manufacturer's Warranty:
1. In accordance with manufacturer's written standard warranty:

a. Warranty Period One (1) Year.

C. Installer's Warranty:
1. In accordance with the terms of the Specification Section - WARRANTIES
a. Warranty Period One (1) Year.

PART 2 - PRODUCTS

2.1 MATERIALS

A. Beams:
1. Wood Laminations:
a. Standard: ANSI A 190.1 "Structural Glued Laminated Timber".
b. Species:
1) Douglas Fir for interior conditions.
c. Thickness: 1-1/2 inches net maximum or as noted on Drawings.
d. Width: Full width of member.
e. Moisture Content (at time of gluing): 7 to12 percent. Range of moisture content of laminations in a single unit shall not exceed 5 percent.
2. Glue-Laminated Units:
a. Stress Values:
1) Douglas Fir:
a) Simple Span: Combination Symbol 24 F-V4.
b) Cantilever and Continuous: Combination Symbol 24 F-V8.
b. Appearance:
1) Industrial Appearance Grade in accordance with AITC Standard 110 where not exposed in a finished space. Bottom lamination of exposed beams and arches, knots may occupy not more than 10% of cross section.
2) Architectural Appearance Grade in accordance with AITC Standard 110 where exposed to view in a finished space. Bottom lamination of exposed beams and arches, knots may occupy not more than 10% of cross section.
c. Camber:
1) As indicated on drawings.
d. Adhesives:
1) In accordance with ANSI A 190.1, "Wet-Use" Type.
e. Sealer:
1) End: In accordance with manufacturer's standard, transparent, colorless wood sealer, effective in retarding transmission of moisture at cross-grain cuts, compatible with the laminating adhesives, CARB Standards, and any finish coats specified.
2) Penetrating: In accordance with manufacturer's standard, translucent, penetrating wood sealer, that will not interfere with application of wood stain and transparent finish, or paint finish, compatible with the laminating adhesives and CARB Standards.
a) Refer to Specification Section – PAINTING for required field-applied finishes.

2.2 FABRICATION

A. Fabrication in accordance with ANSI A190.1.
   1. All cutting and trimming of beams shall be done in the field with one end wild.

B. End Joint Type: In accordance with ANSI A190.1.

C. End Joint Spacing:
   1. Well scattered throughout unit.
   2. Distance between end portions of joints in adjacent laminations.
      a. 6 inches minimum in tension portion (1/8 beam depth plus one lamination – bottom at V4, and top and bottom at V8).

D. Wood within 6 inches of joint fastening: Free of knots and local grain truss deviation.

E. Joint details and fabricating plan and procedures: Approved by Architect.

F. Proof Loaded Finger Joint Test Values: In accordance with ANSI A190.1.

G. Moisture Content at Time of Gluing: 12 percent maximum and 7 percent minimum.

H. Camber as noted on the drawings.

I. Seal ends with 2 coats of sealer.

2.3 SOURCE QUALITY CONTROL

A. Tests, Inspection:
   1. Plant shall provide a report from the Glue Fabrication Inspector that all units have been fabricated in accordance with CBC Section 2303.1.3.

PART 3 - EXECUTION

3.1 INSTALLATION

A. General:
   1. Install miscellaneous steel connectors, anchors, and accessories.
   2. Plan and execute erection procedures so that close fit and neat appearance of joints and structure as a whole will not be impaired. When hoisting members into place, use padded or non-marring slings, and protect corners with wood blocking.
   3. Adequately brace members as they are placed to maintain safe position until full stability is provided.
   4. Avoid cutting glulam members during erection. Except for fastener drilling and other minor cuttings, coat cuts with end sealer.
      a. Where treated members must be cut during erection, apply a heavy brush coat of the same preservative treatment, complying with AWPA Standard M4.
   5. Handle and temporarily support members to prevent visible surface damage.

6. Do not remove wrapping on individually wrapped members until it will serve no useful purpose, including protection form weather, soiling and damage from work of other trades.
   a. Coordinate wrapping removal with finished in work specified in Division 9. Retain wrapping wherever it can serve as a painting shield.
7. Repair damaged surfaces and finishes after completing erection and removing wrappings, or replace damaged members as directed where damage is beyond acceptable repair.

3.2 PROTECTION

A. Control heating, ventilating, and air conditioning in building to avoid damage to or deterioration of glulam work.

B. Protect glued laminated timbers during transit, storage and erection in accordance with AITC Standard III to prevent any damage.
   1. Individually wrap each member to be left exposed, and cut bottom of wrapping only (do not mar beam) to alleviate condensation buildup while storing.
   2. Each member shall be fabricated with wet use adhesive.
   3. Bundle wrap all other members.

END OF SECTION

INTENTIONALLY LEFT BLANK

SECTION 064123 – MODULAR CASEWORK

PART 1 - GENERAL

1.1 SUMMARY

A. This Section includes the following:
   1. Provide all material, labor, equipment and services necessary to completely install all Modular Casework materials, accessories and other related items necessary to complete the Project as indicated by the Contract Documents.
      a. Plastic laminate-faced casework.
      b. Adjustable shelf supports: Metal Shelf Standards
      c. Plastic Laminate countertops.
      d. Solid-Surface countertops.
   2. Version: Fresno Unified School District Standards 2019.

B. Related Sections: The following Sections contain requirements that relate to this Section:
   1. ALL DIVISION 00 SPECIFICATION SECTIONS.
   2. ALL DIVISION 01 SPECIFICATION SECTIONS.
   3. 03 15 14 DRILLED ANCHORS
   4. 03 30 00 CAST-IN-PLACE CONCRETE
   5. 04 22 00 CONCRETE MASONRY UNITS
   6. 05 12 00 STEEL AND FABRICATIONS (Steel supports for modular casework)
   7. 06 10 00 ROUGH CARPENTRY
   8. 07 60 00 SHEET METAL
   9. 09 29 00 GYPSUM BOARD
   10. 09 65 10 RESILIENT BASE AND ACCESSORIES
   11. 09 65 16 RESILIENT SHEET
   12. 09 68 40 CARPET
   13. 09 72 00 WALL COVERINGS
   14. 09 91 00 PAINTING
   15. 10 05 00 MISCELLANEOUS SPECIALTIES
   16. ALL SPECIFICATION SECTIONS IN THE FACILITY SERVICES SUBGROUP.

1.2 REFERENCES

A. Standards:
   1. In accordance with the following standards:
      a. BHMA BHMA stands for Builders Hardware Manufacturers Associates, Inc.
      b. NAAWS "North American Architectural Woodwork Standards", Latest Edition, including latest amendments, by the Architectural Woodwork Institute, Architectural Woodwork Manufacturers Association of Canada, and the Woodwork Institute.
      c. NEMA National Electrical Manufacturers' Associates, Publication Number LD3, latest-edition
      d. NIST National Institute of Standards and Technology
      e. NWMA "Industrial Standard" National Woodwork Manufacturer's Association.
      f. PS Product Standard of the U. S. Department of Commerce

g. WI Woodwork Institute.

1.3 DEFINITIONS

A. Refer to NAAWS.

B. Exposed Portions:
1. Face members and edges of cabinets (cabinet fronts), such as face plates, drawer fronts, door fronts, front edge of shelves.
2. Interior faces of cabinet doors.
3. Underside of bottoms of upper cabinets, 48" above finished floor.
4. Cabinet tops:
a. Under 72" above finish floor.
b. Visible from upper building level.
5. Interior surfaces (including top, bottom, and front of shelves) of open cabinets or cabinets with glass doors.
6. All surfaces of exposed shelves.
7. All surfaces exposed to view.

C. Semi-Exposed Portions:
1. Cabinet divisions, shelves, insides of drawers, and any other cabinet members which cannot be seen when door or drawers are closed.

D. Concealed Portions:
1. Cabinet framing that cannot be seen, such as web frame members, sleepers, dust panels, toe strips covered with resilient base.

E. Shelving:
1. Top and bottom surfaces. Face surfaces are the front and rear edges.
a. Ends are the left/right edges as you face the cabinet.
2. The bottom surface material of all Upper Cabinets attached to walls shall be considered a shelf and manufactured as a shelf.

F. Quality Assurance Options:
1. Certified Compliance Program (CCP):
a. The CCP is an established discipline of quality control, for use in conjunction with the NAAWS, which provides a non-biased means of confirming conformance to a project's drawings and specifications.
b. Contractor to provide field inspection by WI Director, additional to CCP requirements.
c. The Woodwork Manufacturer shall have no less than 5 years of production experience, similar to this project, whose qualifications indicate the ability to comply with the requirements of this Section.
d. The Woodwork Manufacturer must have at least one project in the past 5 years where the value of the woodwork was within 20 percent of the cost of woodwork for this Project.
2. Monitored Compliance Program (MCP):
a. The MCP is an established discipline of quality control, for use in conjunction with the NAAWS, which provides a non-biased means of confirming conformance to a project's drawings and specifications,

b. Includes ongoing review/inspections of the project from its start to certification at completion.
c. The Woodwork Manufacturer shall have no less than 5 years of production experience, similar to this project, whose qualifications indicate the ability to comply with the requirements of this Section.
d. The Woodwork Manufacturer must have at least one project in the past 5 years where the value of the woodwork was within 20 percent of the cost of woodwork for this Project.

1.4 SYSTEM DESCRIPTION

A. Performance Requirements: It is the intention of this specification section and the drawings to form a guide for a complete and operable system. Any items not specifically noted but necessary for a complete and operable system shall be provided under this section.
1. All shelving must be manufactured according to NAAWS for Schools, Hospitals and Library or Book Shelving. 50 lbs./SF.

1.5 SUBMITTALS

A. Submit in accordance with Specification Section - SUBMITTAL PROCEDURES:
1. Product Data.
a. Submit manufacturer's full color range (including any standard and premium colors) for selection by the Architect.
b. Submit 2 copies of Manufacturer's current specifications for Modular Casework including all types of cabinets and accessories included in this section to the Architect for approval prior to fabrication.
2. Shop Drawings.
a. Submit shop drawings from manufacturer detailing equipment assemblies and indicating dimensions, weights, loadings, required clearances, method of field assembly, components, and location and size of each field connection.
b. Shop Drawing format in accordance with NAAWS Section 1, Submittals and WI's Certified Compliance Program.
1) The shop drawings for the modular casework shall comply with and bear the WI CERTIFIED COMPLIANCE LABEL.
2) Each elevation of casework, each laminated plastic top, and each solid surface top shall bear a WI CERTIFIED COMPLIANCE LABEL.
3) Indicate spacing of all hardware accessories for Architect's review of layout.
4) On casework and countertop elevations show the location of backing required for attachment within walls.
5) Before delivery to the jobsite the woodwork supplier shall provide a WI CERTIFIED COMPLIANCE CERTIFICATE indicating the millwork products being supplied and Certifying that these products fully meet the requirements of the Grade or Grades specified.
6) At completion of installation the woodwork installer shall provide a WI CERTIFIED COMPLIANCE CERTIFICATE indicating the products installed, and Certifying that the installation of these products fully meets the requirements of the Grade or Grades specified.

7) All fees charged by the Woodwork Institute for their Certified Compliance Program are the responsibility of the millwork manufacturer and/or installer and shall be included in their bid

3. Samples.
   a. Provide nominal 2" x 3" sample chains of manufacturer's non-premium and premium laminate color selection lines.
      1) Submit color samples of Manufacturer's full color and pattern range (including wood grains) of non-premium and premium priced High Pressure Decorative Laminate to the Architect for color selection prior to fabrication.
         a) See drawings for high pressure decorative laminate color selection.
      2) Submit color samples of high density overlay thermal-fused melamine for color selection by the Architect.
         a) Samples shall be equivalent to SELPLY products, from their full color range selection chain of colors.
      3) Provide finish color selection samples of Pilaster Standard. Specified colors subject to change.
   b. Mock-up as described elsewhere in this section.
4. Quality Assurance/Control Submittals:
   a. Certificates:
      1) Submit three (3) copies of the following:
         a) Before delivery to the jobsite, the modular cabinetwork supplier shall issue a WI CERTIFIED COMPLIANCE CERTIFICATE indicating the modular cabinetwork products and/or fabrication of products to be furnished for this project shall meet fully all the requirements of the grade or grades specified.
         b) Upon completion of inspection of installation by WI Inspector, a WI CERTIFIED COMPLIANCE CERTIFICATE shall be furnished for the installation.
      2) Submit three (3) copies of a letter on Contractor's Letterhead certifying work provided, meets or exceeds, the requirements of this Section.
   b. Labels:
      1) Each plastic laminate countertop supplied shall bear the WI CERTIFIED COMPLIANCE LABEL.

1.6 QUALITY ASSURANCE

A. Qualifications:
   1. Material Qualifications:
      a. Grades as indicated on the drawings in accordance with the specifications, rules and details or casework of the NAAWS Sections 5 "Finishing", 10 "Casework", and 11 "Countertops", unless the drawings and these specification modify said standards.
         1) See Appendix "A" for "Cabinet Design Series" (CDS) Number System used on Modular Casework Schedule.
      b. Laminated Plastic Countertops, Splashes, and Wall Paneling in accordance with NAAWS Section 11 "Countertops".
   2. Installer Qualifications:
      a. Engage an experienced Installer who has successfully completed three (3) projects of similar scope and size to that indicated for this Project.
   3. Manufacturer/Supplier Qualifications:

a. Firm(s) experienced in successfully producing/supplying products similar to that indicated for this Project, with sufficient production/supply capacity to produce/supply required units without causing delay in the work.
b. All modular Cabinet Work must be done by a Single Source WI licensed manufacturer and be able to provide a WI Certified Compliance Certificate.
c. Participation in Woodwork Institute Quality Assurance Program:
   1) If supplier is WI Member Licensee in good standing:
      a) Comply with WI CERTIFIED COMPLIANCE PROGRAM (CCP).
      b) Provide WI Director to inspect installation on-site.
   2) If supplier is not WI Member Licensee in good standing:
      a) Comply with WI MONITORED COMPLIANCE PROGRAM (MCP).

B. Regulatory Requirements:
1. In accordance with Specification Section - REGULATORY REQUIREMENTS, and the following:
   a. CARB Materials and equipment used for this Project shall comply with the current applicable regulations of the California Air Resources Board (CARB) and the Environmental Protection Agency (EPA), in the area where the project is located.
   b. CBC All hardware for casework shall meet CBC Section 11B-309.4 and 11B-811.4.

C. Mockups:
1. Prior to fabricating or installing Modular Cabinet Work, construct a mockup to verify selections made under sample submittals and to demonstrate aesthetic effects as well as qualities of materials and execution. Provide one lower cabinet with drawer, and one upper cabinet, with all examples of hardware for both lower and upper cabinets.
2. Provide mock-up of exposed and interior cabinet surfaces with Pilaster Shelf Standard for review and comment prior to fabrication. Color selection of Pilaster may be subject to change.

D. Meetings:
1. Pre-Installation: Scheduled by the Contractor prior to the start of work.
   a. Coordinate the work with all other related work
   b. identify potential problems that may impede planned progress and proper installation of work regarding quality of installation and warranty requirements.
   c. Review the locations of backing required for casework installation as shown on the casework shop drawings and the Contract Documents.
   d. Review the method of attachment of the backing to the wall system as shown on the Contract Documents.
2. Progress: Scheduled by the Contractor during the performance of the work.
   a. Review for proper installation of work progress.
   b. Identify any installation problems and acceptable corrective measures.
   c. Identify any measures to maintain or regain project schedule if necessary.
3. Completion: Scheduled by the Contractor upon proper completion of the work.
   a. WI Inspector, Project Inspector, and the Architect shall inspect and identify any problems that may impede issuance of warranties or guaranties.
   b. Maintain installed work until the Notice of Substantial Completion has been executed.

1.7 DELIVERY, STORAGE, AND HANDLING

A. Packing, Shipping, Handling, and Unloading:
   1. Products shall be handled in such a manner as to assure that they are free from dents, scratches and other damage.

B. Acceptance at Site:
   1. Hardware products (not already applied) must be in manufacturer's original unopened containers with labels indicating brand name, model, and grade.
   2. Casework products must be free from scratches, gouges, or any other marring or discoloration.
   3. Damaged products will not be accepted.

C. Storage and Protection:
   1. Products shall be stored above ground on level platforms, six (6) inches above ground, allowing air circulation under stacked units, in compliance with PROJECT CONDITIONS below.
      a. Cover materials with protective waterproof covering providing for adequate air circulation and ventilation.

1.8 PROJECT CONDITIONS

A. Environmental Requirements:
   1. Humidity and Temperature: Maintain humidity and temperature in the space to receive products between 45 percent to 65 percent at a temperature of 60 degrees to 90 degrees F. Equilibrium Moisture Content of the wood product conditions shall be maintained between 8 percent and 12 percent. Maintain these requirements for four (4) days minimum prior, during, and following installation in accordance with manufacturer's written recommendations. Inform the Owner of humidity requirements for products installed and maintain until Substantial Completion and the turn-over of the building or facility to the Owner.

1.9 WARRANTY

A. Contractor's General Warranty:
   1. In accordance with Specification Section - WARRANTIES.

B. Manufacturer's Warranty:
   1. In accordance with manufacturer's written standard warranty:
      a. Warranty Period One (1) Year.
      b. Fresno Unified Warranty Period Two (2) Years.

C. Installer's Warranty:
   1. In accordance with the terms of the Specification Section - WARRANTIES
      a. Fresno Unified Warranty Period Two (2) Years.

PART 2 - PRODUCTS

2.1 MANUFACTURERS

A. These products listed herein establish the size, pattern, color range and function selected by the Architect for this Project. Manufacturers that are listed as acceptable alternative manufacturers and substitutions must still comply with the requirements of this project and the products listed in order to be approved as an equivalent during the Submittal Process. If the acceptable alternative manufacturers listed or substitutions are not approved during the Submittal Process due to non-compliance with the contract documents, then the Contractor shall submit product specified.
   1. Specified product manufacturers:
      a. High Pressure Decorative Laminate: WILSONART.
         1) Cabinet Liner Series Type CLS.
      b. Low Pressure Thermal-fused:
         1) AMERICAN LAMINATE, PANELAM, or ROSEBURG FOREST PRODUCTS.
      c. Solid Surfacing: E.I.DuPONT.
      d. Cabinetry Hardware: See Cabinet Hardware Schedule.
      e. Countertop Support Brackets RAKKS.

B. Products from other manufacturers not listed must submit in accordance with Specification Section - SUBSTITUTION PROCEDURES.

2.2 CABINET MATERIALS

A. Exposed Materials:
   1. General:
      a. In accordance with NAAWS Section 4 - Sheet Products.
      b. Minimize seams.
   2. Laminate Systems:
      a. Decorative Laminate:
         1) Horizontal Surfaces: Post-formed Grade HGP (0.042").
         2) Vertical Surfaces: Grade VGP (0.027").
            a) Pattern direction: Vertical, unless otherwise noted.
      b. Edgebanding:
         1) Rigid PVC extrusions, through color with satin finish, 3 mm thick at doors and drawer fronts, 0.5 mm thick elsewhere. Color to match adjacent material.
   3. Solid Surface:
      a. Decorative synthetic marble of solid (mineral and acrylic filled) Methyl Methacrylate.

B. Semi-Exposed Materials:
   1. Cabinet Liner:
      a. Complying with requirements of NEMA LD-3, Grade CLS.
   2. Edgebanding:
      a. Rigid PVC extrusions, through color with satin finish.

1) Typical: 0.5 mm thick.
2) Front edge of shelves and all edges of drawers: 3 mm.

C. Concealed Materials:
1. Particleboard: ANSI A208.1, Grade M-2.
a. 44-50 lb Industrial Grade core.
b. Thickness Swell max: 5.5 percent.
2. Veneer Core Hardwood Plywood (VCHP):
a. No internal voids.
b. MDF cross bands to limit telegraphing of core grain is acceptable.

D. Fasteners:
1. Per NAAWS.
2. Corrosion resistant fasteners throughout the assembly of modular casework.
3. Confirmat screws.

2.3 FABRICATION

A. General:
1. In accordance with NAAWS Section 10 - Casework, Custom Grade, as amended by the Contract Documents.
2. Interface Style, Frameless: Flush Overlay.
3. Attachment method: Doweled confirmat screw joint.
4. Seismic Force Requirements - The types of construction approved by WI that meet CBC Title 24 seismic force requirements are: Lock Joint, Dowled, Dowled / Screwed Construction, Rabbeted Construction, Confirmat Screws, Fully Plowed-in Back, and Backs Screwed on in rabbeted ends, tops, and bottoms. The exact method for seismic force construction is available from WI.
5. Construct openings and backing as required for work done under Division 22 PLUMBING (sinks, plumbing, etc.) and Division 26 ELECTRICAL (outlets, switches, wiring, etc).
a. Exposed Edges: All exposed edges shall be sealed; including sink cut-outs & bottom edges of front edges.
6. Cabinets ganged together or attached to the wall shall be attached with countersunk screws to prevent binding of shelves when provided later.
7. Any vertical or horizontal plane surface less than four (4) foot wide and twelve (12) foot long shall be faced with one continuous laminate sheet with the intent to minimize the number of laminate seams throughout the work, in compliance with NAAWS Section 8 "Wall Surfacing".
8. Exposed ends, panels, and back panels shall flush out with face of doors and drawer fronts.

B. Cabinets:
1. Cabinet box:
a. Bottoms and Ends of Cabinets: 3/4-inch particleboard.
b. Tops of Wall Cabinets and Tall Cabinets: 3/4-inch particleboard.
c. Backs of Cabinets: Particleboard.
1) Concealed Backs: 1/2" minimum.
2) Exposed Backs: 1/2" minimum.
2. Filler Strips:

a. Provide as needed to close spaces between cabinets and walls, ceilings, and indicated equipment. Fabricate from same material and with same finish as cabinets.

3. Shelving System:
   a. Shelf Support System:
      1) Metal Shelf Standards:
         a) Surface mounted on vertical faces of cabinet.
         b) Shelves shall be full widths of openings, flush with inside face of cabinet doors, and dadoed around shelf standards to prevent movement during seismic events.
         c) Provide four clips for each shelf.
   b. Shelves: Veneer Core Hardwood Plywood.
      1) Span less than 25-inches: 3/4-inch.
      2) Span greater than 25-inches: 1-inch.
      3) Library shelves of any span: 1-inch thick.
4. Doors:
   a. Core material: Particleboard.
   b. Doors 48 inches high or less: 3/4 inch thick.
   c. Doors more than 48 inches high: 1-1/8 inches thick.
   d. Doors more than 80 inches high: 4 hinges, minimum.
   e. Stiles and Rails of Glazed Doors: 3/4 inch thick.
   f. Let in 1/8" reveals for institutional hinges.
5. Drawers:
   a. Drawer Fronts: 3/4-inch Particleboard.
   b. Drawer Sides and Backs: 1/2-inch Veneer-Core Hardwood Plywood.
      1) Joined using Confirmat Screws in lieu of dowels.
   c. Drawer Bottoms: 1/2-inch Veneer-Core Hardwood Plywood glued and dadoed into front, back, and sides of drawers.
   d. File Drawers / Lateral File Drawers:
      1) Sides: 3/4-inch Veneer-Core Hardwood Plywood.
      2) Bottoms: 5/8 inch Veneer-Core Hardwood Plywood.
      3) Sides and bottoms shall be secured using 2-inch Confirmat screws.
      4) Accessories: COMPX "Timberline" frames.
   e. Security Panels: 1/2-inch Veneer-Core Hardwood Plywood.
      1) Provide Security Panels above and below all locking drawers.
   f. Keying:
      1) All locks shall be keyed the same with a single key capable of unlocking all cabinets and drawers on one campus.
      2) Deliver all keys, properly tagged, to FUSD Key/Lock Shop Supervisor, Phone Number (559) 457-3331.

C. Countertops:
1. General: In accordance with NAAWS Section 11 -- Countertops, as amended by the Contract Documents.
2. Laminate Countertops:
   a. Standard: In accordance NEMA standard LD-3.
   b. Strength: 3/16 inch maximum deflection with 150 pound load at midspan.
   c. Surface Material: Plastic Laminate.
   d. Backing Material: Cabinet Liner.
   e. Core: 3/4-inch Particleboard.
   f. Front Edge: Seamless waterfall with drip groove edge.

g. Back Splash: 6 inch integral cove splash, unless otherwise indicated on the drawings.
h. End Splash: 6 inch butt end splash, unless otherwise indicated on the drawings.
i. Top of Splash: Square Edge.
j. Exposed Edges: All exposed edges shall be sealed; including sink cut-outs & bottom edges of front edges.

3. Solid Surface:
a. Solid Surface thickness: 1/2 inch at counter and back splash.
b. Core: Veneer-Core Plywood - see drawings for thickness required.
c. Front Edge: Quarter-inch radius edge with drip groove edge.

D. Hardware:
1. See schedule at the end of this section for typical cabinet hardware.
2. Hardware shall be furnished and installed as required to provide a complete casework installation for overlay construction, unless noted otherwise.
3. Provide metal strike at locks.
4. Finish: BHMA 626 (26D), unless otherwise noted.

E. Countertop Supports
1. Steel Support Angle and Base Plate:
a. Single-piece construction: All welded ground smooth, flush and level.
b. Finish: Galvanized.
c. Angle material to be A36 (Fy=36ksi).
d. Plate material to be A36 (Fy=36ksi).
e. All welding to conform to NAAWS and shall be done by certified welders.
f. All work shall conform to the latest edition of the American Institute of Steel Construction.

2. RAKKS (EH Series Counter Support Brackets):
a. EH-1818 for counter depths up to 25"; suitable for surface mounted conditions.
b. EH-1824 for counter depths up to 30"; suitable for surface mounted conditions.
c. EH-1818FM for counter depths up to 25"; suitable for flush mounted conditions.
d. EH-1824FM for counter depths up to 30"; suitable for flush mounted conditions.

PART 3 - EXECUTION

3.1 EXAMINATION

A. Site verification of conditions:
1. Prior to the execution of the work under this specification section, inspect the installed work executed under other specification sections of this Project Manual, which affect the execution of work under this specification section.
2. Report unacceptable conditions to the Architect. Do not begin work until unacceptable conditions have been corrected.
3. Execution of work under this specification section shall constitute acceptance of existing conditions.

3.2 PREPARATION

A. Coordination:

1. Coordinate work under this specification section with work specified under other specification sections to ensure proper and adequate interface of work specified under this specification section.

B. Protection:
1. Protect all adjacent surfaces from drips, spray, air pollution of surrounding environment, and other damage from work under this specification section.

C. Surface preparation:
1. Prepare surface in accordance with manufacturer's written instructions and recommendations.
2. Clean substrates of substances (oil, grease, rolling compounds, incompatible primers, loose mill scale, etc.) which could impair bond of materials specified within this section.

3.3 INSTALLATION

A. General:
1. In accordance with manufacturer's written instructions and recommendations unless specifically noted otherwise.
   a. Provide experienced, factory trained craftspeople under manufacturers direct supervision.
2. In accordance with approved submittals.
3. In accordance with Regulatory Requirements.
4. The entire installation shall present a first class, workmanlike appearance, without open joints, tool marks or other blemishes, and subject to the Architect's approval.
5. Edges of cutouts, subject to excessive moisture, shall be sealed with a color-toned (for verification), water-resistant sealer before trim or sink rims are installed.

B. Layout:
1. Set plumb, level, and to true lines as shown on the drawings.
2. Filler panels and scribe strips or moldings, as required, shall be properly scribed to adjacent work and securely attached to cabinets as indicated on the drawings.

C. Anchorage:
1. The backs of the cabinets shall be secured to the wall backing.
2. Refer to the Drawings for the backing and anchorage details.
3. As a minimum, each cabinet shall be secured to the backing with a total of four #14 screws, piercing the framing by at least 2 inches minimum.

D. Cabinet Bases:
1. Toe Kick: Cabinet base shall be set back from the face of the cabinet 3-inches, or as indicated
2. Cabinet sides: Cabinet shall be set 3/8-inch back from the face of the cabinet.

3.4 FIELD QUALITY CONTROL

A. Inspection:
1. Schedule WI inspection with a minimum of 7 days notice of planned installation.
2. Schedule inspections and notify the Architect, Owner's Project Inspector and any other regulatory agencies of the time at least 48 hours prior to the inspection.

3. No work shall be without the inspections required by Regulatory Requirements.

3.5 ADJUSTING

A. Test and adjust carpentry hardware. Replace damaged or malfunctioning controls and equipment.

3.6 CLEANING

A. Clean in accordance with Specification - PROJECT CLOSEOUT.
   1. Clean any soiled surfaces immediately.
   2. In accordance with manufacturer's written instructions and recommendations.
   3. Finish shall be clean and ready for the application of any additional finishes.

3.7 PROTECTION

A. Protection from traffic:
   1. Provide final protection and maintain conditions, in a manner acceptable to manufacturer and installer, which ensures the work of this section being without damage or deterioration until the time of Substantial Completion.

3.8 SCHEDULES

A. Standard Cabinetry Hardware specified, or approved equivalent:
   1. Hinges: Institutional Hinges for Overlay doors, 2-3/4" five knuckle with hospital tips and 2-5/8" extended side panel wing:
      a. ROCKFORD PROCESS:
         1) #374 for 3/4" x 3/4" thicknesses.
         2) #376 for 3/4" x 13/16" thicknesses.
   2. Pulls (Steel Wire "U" Shaped - 4" centers, 1-1/4" Projection from face of drawer or door):
      a. JAMISON: SWP4-26D.
   3. Locks (Hinged Doors and Drawers for Overlay Construction):
      a. COMP X NATIONAL: #C413A & 915.
         1) Provide compatible strike.
   4. Locks (Sliding Doors):
      a. COMP X NATIONAL: #C8142 (3/4").
      b. Approved equivalent manufacturer:
         1) KNAPE AND VOGT.: #KV984.
      c. Provide compatible strike.
   5. Locks (Sliding Glass Doors):
      a. COMP X NATIONAL: #C8140 (1/4").
      b. Approved equivalent manufacturer:
         1) KNAPE AND VOGT: #KV965.
      c. Provide compatible strike.
   6. Drawer Slides up to 24 inches Wide:
      a. Pencil Drawers:

1) 65 lb capacity, full extension, lever disconnect:
a) ACCURIDE 2632.
2) Approved equivalent manufacturer:
a) KNAPE AND VOGT: 4400.

b. General Purpose Drawers:
1) 100 lb capacity, full extension, rail mount disconnect:
a) ACCURIDE 7432.
2) Approved equivalent manufacturer:
a) KNAPE AND VOGT: 8400.

c. File Drawers:
1) 150 lb capacity, full extension, rail mount disconnect:
a) ACCURIDE 4032.
2) Approved equivalent manufacturer:
a) KNAPE AND VOGT: 8500.

7. Drawer Slides over 24 inches Wide:
a. Pencil Drawers:
1) 100 lb capacity, full extension, push latch disconnect:
a) ACCURIDE 3732.
2) Approved equivalent manufacturer:
a) KNAPE AND VOGT: 8400.

b. General Purpose Drawers:
1) 150 lb capacity, full extension, rail mount disconnect:
a) ACCURIDE 4032.
2) Approved equivalent manufacturer:
a) KNAPE AND VOGT: 8500.

c. File Drawers:
1) 200 lb capacity, full extension, rail mount disconnect:
a) ACCURIDE 3642.
2) Approved equivalent manufacturer:
a) KNAPE AND VOGT: 8800.

8. File Frames for File Drawers & Lateral File Drawers.
a. COMPX TIMBERLINE File Frame System.

9. Adjustable Shelf Supports (zinc die-cast nickel plated supports) for glass shelves:
a. HETTICH: #1 010 564.

10. Adjustable Shelf Pilaster Standard and Shelf Supports:
a. Pilaster Standard shall be KNAPE & VOGT #255, 19-gage x 5/8" wide x 3/16" high.
1) #255-WH (Epoxy-Coated White) at interior cabinet surface locations.
2) #255-BRN (Brown) at exposed cabinet surface locations.
b. Shelf Supports shall be KNAPE & VOGT #239 ZC (Zinc Coated).

11. Magnetic Catcher:
a. AMEROCK: #CM9783-AL.
b. Approved equivalent manufacturer:
1) KNAPE AND VOGT: #918-AL.

12. Exposed Fasteners: When exposed fasteners are used, provide zinc chromate coated oval head, self-tapping phillips screws with grommet finishing washers, same finish as screws.

13. Hinged Glass Doors:
a. 7/32 inch crystal sheet installed in accordance with WI Section 15.

14. Sliding Glass Doors:
a. 7/32 inch crystal sheet installed in accordance with WI Section 15.

b. Top and bottom metal tracks:
   1) Doors up to 24"w x 42"h: KNAPE AND VOGT #1092.
   2) Doors larger than 24"w x 42"h: KNAPE AND VOGT #992.

15. Casters: All swivel, 2 non-braking and 2 braking, with non-marking 5 inch diameter rubber wheels, manufacturer's standard finish.
    a. FAULTLESS: #BP421-5 and #BP421-5RB.
16. Joint Closure:
    a. PEMKO: #313AN.
17. Coat Hooks (Cast aluminum wardrobe hook):
    a. IVES: #E IVSP581A3.
18. Cabinet Catch (only when indicated on the drawings)
    a. STANLEY #CD34.
19. Label Plate:
    a. HAFELE #168.02.761.
20. Grommets, Cable Managers and Cabinet Vents:
    a. Provide grommets, cable managers and cabinet vents in various sizes, finishes and shapes, as indicated on the drawings and as otherwise required for a complete installation.
    b. Provide type S/S-3 Grommet for all conditions not noted. Grommets & Air Vents by DOUG MOCKETT & COMPANY, INC., or approved equivalent.
    c. A partial listing is provided below (for other listings, see the drawings):
       1) Wire Manager: #WN-2A.
21. Miscellaneous Hardware Items:
    a. DEMCO, INC.:
       1) Keyboard Drawer: #P148-0061.
    b. HAFELE:
       1) Bow Handles: #102.49.402.
       2) Compact Disk Rails: #810.58.335.
       3) Video Cassette Rails: #810.58.326.
       4) Metal Label Frames: E168.02.789 (nickel-plated).
       5) Miscellaneous: Dished Sleeves, screws, washers, nuts, threaded pins, screw-in sleeves, shelf supports with locking screws, connecting fittings, & capped bolts.
    c. NOVA:
       1) Mobil Pedestal: #85 series.
       2) Retrofit Kit: E50-0-1818.
    d. REV-A-SHELF:
       1) Cutlery / Utility Trays: CT4.
    e. CHARLES McMURRAY:
       1) 2" Plate Casters: #MC660-44-273.

END OF SECTION

SECTION 071850 – VAPOR-ALKALINITY CONTROL

PART 1 - GENERAL

1.1 SUMMARY

A. This Section includes the following:
   1. Provide all material, labor, equipment, testing and services necessary to:
      a. Completely install all Vapor-Alkalinity Control 100 percent solids epoxy membrane materials, accessories and other related items necessary to control for water vapor and alkalinity in existing or new concrete slabs for the Project.

B. Related Sections: The following Project Manual Sections contain requirements that relate to this section:
   1. ALL DIVISION 00 SPECIFICATION SECTIONS (Including BID FORM)
   2. ALL DIVISION 01 SPECIFICATION SECTIONS.
   3. 03 30 00 CAST-IN-PLACE CONCRETE
   4. 09 30 00 TILE
   5. 09 65 16 RESILIENT SHEET
   6. 09 67 23 RESINOUS FLOORING
   7. 09 68 40 CARPET
   8. ALL SPECIFICATION SECTIONS IN THE FACILITY SERVICES SUBGROUP.

C. Cost of Work:
   1. The entire cost for providing the vapor-alkalinity control specified under this Section shall be listed on the BID FORM as a Line Item and included as a part of the Base Bid. Refer to the BID FORM.
   2. If it is determined by way of testing, and it is agreed to by the Owner, Architect, Contractor, and the Flooring Installer, that the work of this Section is not required, then this Work (or a portion of this Work agreed to by the Owner, Architect and the Contractor) for the Installation of the Vapor-Alkalinity Control Membrane System will be deleted from the Project by the way of a Change Order, and the Contract Sum shall be reduced accordingly.

1.2 REFERENCES

A. Standards:
   1. In accordance with the following standards:
      a. ACI American Concrete Institute
         1) ACI Committee Report 201 "Guide to Durable Concrete"
      b. ASTM American Society for Testing Materials International

1.3 DEFINITIONS

A. Membrane System: "water vapor-alkalinity membrane system".

B. New Concrete Slab: any concrete slab poured after the signing of the Contract for this Project, regardless of the duration of the construction period.

C. Existing Concrete Slabs: any slabs existing (or poured) prior to this Project.

1.4 SYSTEM DESCRIPTION

A. Membrane System Performance Requirements: It is the intention of this section to form a guide for a complete membrane system. Any items not specifically noted but necessary for a complete membrane system shall be provided under this section. Membrane System shall comply with the following:
1. Shall control alkalinity for a long term maximum resistance of pH 14 per pH Testing of ASTM F 710 "Preparing Concrete Floors to Receive Resilient Flooring".
2. Shall control vapor transmission up to and including 100 percent readings per RH Testing of ASTM F 2170 "Determining Relative Humidity in Concrete Floor Slabs Using *in situ* Probes".
3. Perm Rate results (net perms - grains /hr/sq.ft. in 1 inch of Hg) of the membrane system shall not exceed:
   a. New Concrete Slabs: 0.09 grains/sq. ft./hour in 1 inch of Hg or less per ASTM E 96 "Water Vapor Transmission of Materials" per the Water Method for new concrete slabs.
   b. Existing Concrete Slabs: 0.05 grains/sq. ft./hour in 1 inch of Hg or less per ASTM E 96 "Water Vapor Transmission of Materials" per the Water Method for renovation work on existing slabs.
4. Compatible with all types of floor covering products and systems specified for this project.
5. Independently tested with certified results.
6. Contain no silicate or water/alkaline soluble compounds.
7. Capable of the following in an environment of constant water vapor and water exposure:
   a. System shall be capable of curing well when water saturation of the surface underneath coatings can begin within a short period of time depending on the amount of osmotic water/moisture permeating through the concrete.
   b. Rapid adhesion to the substrate without jeopardizing the long term bonding performance.
8. Sufficient density to avoid water vapor damage to other adhered systems.
9. Resistant to most commonly encountered acids/solvents in case of topical exposure (spills).

1.5 SUBMITTALS

A. Submit in accordance with Specification Section - SUBMITTAL PROCEDURES:
1. Product Data:
   a. Manufacturer's Data for each type of product specified.
2. Quality Assurance/Control:
   a. Test Reports:
      1) Independent Testing Laboratory test results for RH (relative humidity) in concrete.
      2) Independent Testing Laboratory test results for pH on concrete.

3) Contractor test results for Perm Rating of the Membrane System that the net perms test results shall be submitted with verification that lab applied the manufacturer's product to the test samples.

b. Manufacturer's Instructions:
1) Written installation instructions.

c. Manufacturer's Field Reports:
1) Written field report detailing installation observations.
2) Final field report after curing indicating installation was performed properly.

d. Qualification Statements
1) Manufacturer's Membrane System Performance requirement letter.
2) List of Previous Projects.
3) Manufacturer's Installer Certification.
4) Manufacturer's Duration of Experience.

3. Closeout Submittals:
a. In accordance with Specification Section – PROJECT CLOSEOUT.
b. In accordance with this specification and with Specification Section – WARRANTIES.

1.6 QUALITY ASSURANCE

A. Qualifications:
1. Material Qualifications:
a. All items shall be within the Membrane System Performance Requirements specified earlier within this specification section.
b. Provide list of at least three (3) projects available for inspection employing same vapor-alkalinity control system(s) within the last ten (10) years, within the same climate zone.
2. Installer Qualifications:
a. Engage an experienced Installer who is certified in writing by the manufacturer listed herein as qualified to install manufacturer's product (or system) in accordance with manufacturer's warranty requirements.
3. Manufacturer's Qualifications:
a. Firm regularly engaged in the business and manufacture of vapor emission and alkalinity control installations of similar size and complexity with the system proposed for use, and have had experience for at least ten (10) years of manufacturing water-vapor reduction systems with the product submitted.

B. Regulatory Requirements:
1. In accordance with Specification Section - REGULATORY REQUIREMENTS, and the following:
a. CARB Materials and equipment used for this Project shall comply with the current applicable regulations of the California Air Resources Board (CARB) and the Environmental Protection Agency (EPA), in the area where the project is located.

C. Meetings:
1. Pre-Installation: Scheduled by the Contractor prior to the start of work.
a. Coordinate the work with other work being performed.

b. Identify any potential problems that may impede planned progress and proper installation of work regarding quality of installation and warranty requirements.
c. Review delivery, storage, and handling procedures.
d. Review project conditions.
e. Review condition of concrete slabs on grade.

2. Progress: Scheduled by the Contractor during the performance of the work.
   a. Review for proper installation of work progress.
   b. Identify any installation problems and acceptable corrective measures.
   c. Identify any measures to maintain or regain project schedule if necessary.
3. Completion: Scheduled by the Contractor upon proper completion of the work.
   a. Inspect and identify any problems that may impede issuance of warranties or guaranties.
   b. Maintaining installed work until the Notice of Substantial Completion has been executed.

1.7 DELIVERY, STORAGE AND HANDLING

A. Acceptance at Site:
1. Products must be in manufacturer's original unopened containers with labels indicating brand name and product name.
2. Damaged products will not be accepted.

B. Storage and protection:
1. Products shall be stored above ground on level platforms, six (6) inches above ground, allowing air circulation under stacked units, in a locked, clean and neat, well ventilated area.
   a. Cover material with protective water proof covering providing for adequate air circulation and ventilation.
   b. Empty containers shall not be removed from the site, unless approved by the Architect.

1.8 PROJECT CONDITIONS

A. Environmental requirements:
1. Temperature:
   a. Maintain ambient temperature in all spaces to receive independent testing and membrane system installation between sixty-five (65) degrees Fahrenheit and seventy-eight (78) degrees Fahrenheit for seven (7) days prior, during, and after installation.
   b. Inform the Owner of ambient temperature in space to receive independent testing and membrane system installation and maintain until Substantial Completion and turn-over of the building or facility to the Owner.
2. Ventilation:
   a. During membrane system installation provide continuous ventilation and indirect air movement at all times during application and curing process.

B. Existing conditions:

1. Examine site and compare it with the drawings and specifications. Thoroughly investigate and verify conditions under which the work is to be performed. No allowance will be made for extra work resulting from negligence or failure to be acquainted with all available information concerning conditions necessary to estimate the difficulty or cost of the work.
2. Concrete surfaces shall have cured for not less than twenty-eight (28) days before independent testing.
3. Not less than seven (7) days shall have passed since surfaces were last wet.

1.9 WARRANTY

A. Contractor's General Warranty:
   1. In accordance with specification section - WARRANTIES

B. Manufacturer's Warranty:
   1. In accordance with manufacturer’s written standard warranty.
      a. Manufacturer's warranty shall cover against water vapor transmission or out of range levels of alkalinity failure through concrete slabs and includes all labor and material costs for replacement of all products installed over the membrane system.
      b. Warranty period Fifteen (15) Years.

C. Installer's Warranty:
   1. In accordance with the terms of Specification Section – WARRANTIES:
      a. Warranty period Five (5) Years.

PART 2 - PRODUCTS

2.1 MANUFACTURERS

A. These products listed herein establish the size, pattern, color range and function selected by the Architect for this Project. Manufacturers that are listed as acceptable alternative manufacturers and substitutions must still comply with the requirements of this project and the products listed in order to be approved as an equivalent during the Submittal Process. If the acceptable alternative manufacturers listed or substitutions are not approved during the Submittal Process due to non-compliance with the contract documents, then the Contractor shall submit product specified.
   1. Membrane System for New Concrete Slabs - Specified product manufacturer:
      a. KOESTER AMERICAN CORP. "VAP I 2000 SYSTEM"
      b. Approved equivalent manufacturers:
         1) ALLIED CONSTRUCTION TECHNOLOGY 2170.
         2) MAPEI "Planiseal EMB".
   2. Membrane System for Existing Concrete slabs - Specified product manufacturer:
      a. KOESTER AMERICAN CORP. "VAP I 2000FS SYSTEM"
      b. Approved equivalent manufacturers:
         1) ALLIED CONSTRUCTION TECHNOLOGY 2170 Fast Setting Product.
         2) MAPEI "Planiseal EMB" Fast Setting Product.
   3. Core Testing Repair Product:

a. CTS CEMENT "RAPID SET CEMENT"

B. Products from other manufacturers not listed must submit in accordance with Specification Section - SUBSTITUTION PROCEDURES.

2.2 MATERIALS

A. General:
1. Membrane System shall be the product of one manufacturer.

B. Membrane System for New Concrete Slab Substrates: One (1) Coat, epoxy 100 percent solids system, containing specifically formulated chemicals and resins complying with the Performance Requirements specified. No silicate or water based formulations are allowed.
1. Pot Life12 minutes.
2. Cure-Time 12 hours.
3. Solid Content 100 percent.
4. VOC, mixed Less than 10 g/L.
5. Flash Point Greater than 200 degrees F.
6. Storage Between 50 degrees F - 90 degrees F.
7. Shelf Life 1 Year minimum in original sealed container.

C. Membrane System for Existing Concrete Slab Substrates: One (1) Coat, epoxy 100 percent solids fast setting system, containing specifically formulated chemicals and resins complying with the Performance Requirements specified. No silicate or water based formulations are allowed.
1. Pot Life12 minutes.
2. Cure-Time 4 hours.
3. Solid Content 100 percent.
4. VOC, mixed Less than 10 g/L.
5. Flash Point Greater than 200 degrees F.
6. Storage Between 50 degrees F - 90 degrees F.
7. Shelf Life 1 Year minimum in original sealed container.

2.3 ACCESSORIES

A. Bonding Material (if required): Provide membrane manufacturer's written recommended bonding emulsion materials compatible with the membrane system.

B. Crack and Joint Filler:
1. Provide membrane system manufacturer’s written recommended crack and joint materials compatible with the membrane system.

2.4 MIXES

A. Vapor-Alkalinity Control Membrane System:
1. Use clean containers.
2. Mix thoroughly as per manufacturer's written requirements to obtain a homogeneous mixture.

a. Use a low speed motor less than 400 rpm and a two bladed "jiffy mixing blade" only. DO NOT AERATE! Mix ratios are measured by volume.
b. Specified membrane system shall have its components mixed at a ratio of 2.4:1.

PART 3 - EXECUTION

3.1 EXAMINATION

A. Site verification of conditions:
1. Preparation shall not begin until the Owner, Architect, and Contractor have reviewed independent testing laboratory results of Alkalinity and Relative Humidity testing and have informed the membrane system manufacturer and installer of areas where the membrane system is to be installed.
2. Prior to the execution (preparation) of the work under this specification section, the Owner's representative shall inspect the installed work executed under other sections of this Project Manual that affect the execution of work under this specification section.
   a. Membrane System Installer to investigate and inform the membrane system manufacturer if Alkali-Silica Reaction is present, and/or oil contamination, concrete additives (using chlorides), or any other soluble compounds that can contaminate surfaces have been used in any concrete mix, or is present in the existing concrete substrate.
3. Report unacceptable conditions to the Architect. Do not begin work until unacceptable conditions have been corrected.
4. Execution of work under this specification section shall constitute acceptance of existing conditions.

3.2 PREPARATION

A. Coordination:
1. Coordinate work under this specification section with work specified under other sections to ensure proper and adequate interface of work.

B. Protection:
1. Protect all adjacent surfaces from drips, spray, air pollution of the surrounding environment, and other damage from work under this specification section.

C. Surface preparation:
1. Comply with ASTM F 3010 "Standard Practice for Two-Component Resin Based Membrane-Forming Moisture Mitigation Systems for Use Under Resilient Floor Coverings".
2. After the Testing Laboratory removal of all RH probes, fill all RH Test holes with core repair product in accordance with membrane manufacturer’s written recommendations, and allow curing before any other cleaning occurs.
3. Clean all surfaces to receive membrane system.
4. "Shotblast" all floors and clean surfaces with a dust contained vacuum to remove all residue off the substrate to a minimum CSP of 3. Shotblast existing areas to aminimum of CSP 4. Systems introducing water or acids to the floor systems (such as "Hydrablasting" or "Acid Etching") are NOT ALLOWED.

a. Grinding floor areas is only allowed when floor areas are inaccessible by "Shotblasting".
   1) Grind to a CSP (Concrete Surface Profile) as recommended in writing by the membrane system manufacturer, but in no cases less than 3.
      a) Existing slabs shall be no less than 4.
   2) Where surface profiles require (because of silicate or other bond breaker film applications), grind to a higher level of CSP, as required in writing by the membrane system manufacturer for removal of film items not compatible with the system membrane.
b. Protect electrical or mechanical equipment items in place from dust and particulate residue that could impede their proper operation.
c. Remove ALL defective materials and foreign matter such as dust, adhesives, leveling compounds, paint, dirt, floor hardeners, bond breakers, oil, grease, curing agents, form release agents, efflorescence, laitance, "shotblast" bb's, etc.
d. Remove, after "shotblasting", leaving no reinforcing fibers (if any) left on the concrete surfaces.
   1) Reinforcing fibers must be burned off, scraped and vacuumed.

5. Repair all cracks, expansion joint, control joints, and open surface honeycombs and fill in accordance with crack and joint filler manufacturer's written recommendations.
   a. Mix with silica sand for large cracks or voids.
6. Provide an uncontaminated, absorptive, sound surface.

3.3 APPLICATION

A. General:
   1. In accordance with manufacturer's written instructions and recommendations unless specifically noted otherwise.
   2. In accordance with approved submittals.
   3. In accordance with Regulatory Requirements.
   4. Verify that required repairs and fills are complete, cured, and dry before application.

B. Assistance:
   1. Application shall be in direct consultation and review of manufacturer’s representative.

C. System Application:
   1. The coverage rate for the provided system shall be based on the surface texture and porosity of the substrates as well as the measured level of moisture from the examination of the substrates after surface preparation, and in accordance with manufacturerr's written instructions. Approximate minimum coverage of the specified membrane system relative to existing levels of moisture vapor after surface preparation are as follows:
      a. New concrete slabs 150 sq. ft. / gal.
      b. Existing concrete slabs 130 sq. ft. / gal.
      c. Apply one coat of the specified system at the written recommended rates (see above) using a squeegee and or a 3/8 inch nap roller leaving NO areas untreated.
      d. Allow the substrate to cure a minimum of:
         1) New concrete slabs: 12 hours before installing underlayment or flooring system.
         2) Existing concrete slabs: 4 hours before installing underlayment or flooring system.

3.4 FIELD QUALITY CONTROL

A. Site Tests:
1. Prior to the execution (preparation) of the work of this specification section, the Project Inspector will arrange with the Independent Testing Laboratory to perform the following tests:
   a. Alkalinity Testing per ASTM F 710 "Preparing Concrete Floors to Receive Resilient Flooring".
   b. Relative Humidity Testing per ASTM F 2170 "Determining Relative Humidity in Concrete Floor Slabs Using *in situ* Probes".
2. Test only concrete slabs scheduled to receive floor coverings.
3. Test only when concrete floor slabs have cured a minimum of 28 days.
4. Test only when the concrete slabs have been acclimated to final environmental conditions as specified in the Article PROJECT CONDITIONS within this Specification Section.

B. Inspection:
1. Schedule inspections and notify the Architect, Project Inspector, and any other regulatory agencies of the time at least 48 hours prior to the inspection.
2. No work shall proceed without the inspections of the Project Inspector.

C. Manufacturer's Field Services:
1. Membrane System Manufacturer shall field verify and report on observations of system application per manufacturer's recommendations during installation.
2. Membrane System Manufacturer shall issue a Final Field Report, after curing, indicating installation was completed per manufacturer's recommendations.

3.5 CLEANING

A. Cleaning:
1. Clean in accordance with Specification Section - PROJECT CLOSEOUT.
2. Clean any soiled surfaces immediately.
3. Remove all debris resulting from specified system installation from project area.
4. Finish shall be clean and ready for the application of any additional finishes.
5. Clean all tools and equipment as recommended in writting by the manufacturer.

3.6 PROTECTION

A. Protection:
1. Protect membrane system during specified cure periods from any kind of traffic, topical water, and contaminants.

END OF SECTION

INTENTIONALLY LEFT BLANK

SECTION 072100 – INSULATION

PART 1 - GENERAL

1.1 SUMMARY

A. This Section includes the following:

B. Provide all material, labor, equipment and services necessary to completely install all Insulation, accessories and other related items necessary to complete the Project as indicated by the Contract Documents.

C. Related Sections: The following Sections contain requirements that relate to this Section:
1. ALL DIVISION 00 SPECIFICATION SECTIONS.
2. ALL DIVISION 01 SPECIFICATION SECTIONS.
3. 04 22 00 CONCRETE MASONRY UNITS
4. 05 12 00 STEEL AND FABRICATIONS
5. 05 30 00 METAL DECK
6. 06 10 00 ROUGH CARPENTRY
7. 06 17 33 WOOD JOISTS
8. 07 31 13 SHINGLES
9. 07 40 00 METAL PANELS
10. 07 51 13 BUILT-UP ROOFING
11. 07 60 00 SHEET METAL
12. 08 11 00 METAL DOORS AND FRAMES
13. 09 24 00 CEMENT PLASTER
14. 09 29 00 GYPSUM BOARD
15. 09 50 00 ACOUSTICAL CEILINGS
16. ALL SPECIFICATION SECTIONS IN THE FACILITY SERVICES SUBGROUP.
17. ALL SPECIFICATION SECTIONS IN THE SITE AND INFRASTRUCTURE SUBGROUP.

1.2 REFERENCES

A. Standards:
1. In accordance with the following standards:
   a. MIMA Mineral Insulation Manufacturers Association
   b. TIMA Thermal Insulation Manufacturers Association

1.3 SUBMITTALS

A. Submit in accordance with Specification Section - SUBMITTAL PROCEDURES:
1. Product Data.
   a. Product Data on materials and accessories.
2. Quality Assurance/Control Submittals:
   a. Manufacturer's Written Instructions:
      1) Submit three (3) copies of manufacturer's written instructions.

3. Closeout Submittals in accordance with the following:
   a. Warranty in accordance with Specification Section - WARRANTIES.

1.4 QUALITY ASSURANCE

A. In accordance with California Quality Standards.

B. The R values for the insulation materials shall be in accordance with "The Standard Mineral Wool Building Insulation" latest Edition of the MIMA.

C. Regulatory Requirements:
   1. In accordance with Specification Section - REGULATORY REQUIREMENTS, and the following:
      a. ASTM American Society for Testing and Materials

1.5 DELIVERY, STORAGE, AND HANDLING

A. Delivery and Storage of Materials:
   1. All Materials shall be delivered and stored in original unopened packages with manufacturer's name and contents legibly indicated. Materials shall be stored in a dry place, and protected from damage.

1.6 WARRANTY

A. Contractor's General Warranty:
   1. In accordance with Specification Section - WARRANTIES.

B. Manufacturer's Warranty:
   1. In accordance with manufacturer's written standard warranty:
      a. Warranty Period One (1) Year.

C. Installer's Warranty:
   1. In accordance with the terms of the Specification Section - WARRANTIES
      a. Warranty Period One (1) Year.

PART 2 - PRODUCTS

2.1 MANUFACTURERS

A. These products listed herein establish the size, pattern, color range and function selected by the Architect for this Project. Manufacturers that are listed as acceptable alternative manufacturers and substitutions must still comply with the requirements of this project and the products listed in order to be approved as an equivalent during the Submittal Process. If the acceptable alternative manufacturers listed or substitutions are not approved during the Submittal Process due to non-compliance with the contract documents, then the Contractor shall submit product specified.
   1. Specified blanket insulation product manufacturer,:

a. OWENS CORNING
b. Acceptable alternative manufacturers:
1) CERTAINTEED
2) JOHNS MANVILLE CORPORATION

2. Specified sound blanket insulation product manufacturer:
a. OWENS CORNING
b. Acceptable alternative manufacturers:
1) CERTAINTEED
2) JOHNS MANVILLE CORPORATION

3. Specified sound deadening board product supplier:
a. BLUE RIDGE FIBERBOARD "SoundStop".

4. Specified rigid board insulation product manufacturer:
a. RMAX. "Thermasheath-3"
b. Acceptable Alternative Manufacturers:
1) ATLAS.
2) JOHNS MANVILLE CORPORATION.
3) TREMCO.

5. Specified acoustical blanket insulation product manufacturer:
a. OWENS CORNING "Select Sound Black Acoustical Fiberglass Blanket".

6. Specified poultry netting, and FSK tape product manufacturer or approved equivalent:
a. INSULATION MATERIALS.

7. Specified welded stud stick pins and self-locking washers product manufacturer or approved equivalent:
a. SUNBELT STUD WELDING.

B. Products from other manufacturers not listed must submit in accordance with Specification Section - SUBSTITUTION PROCEDURES.

2.2 MATERIALS

A. Thermal Blanket:
1. Construction in accordance with the following:
a. Type I: Unfaced, Glass-Fiber Blanket Insulation: ASTM C 665, Type I; with a maximum flame-spread and smoke-developed indices of 25 and 50, respectively, per ASTM E 84 "Test Method for Surface Burning Characteristics of Building Materials"; passing ASTM E 136 "Test Method for Behavior of Materials in a Vertical Tube Furnace at 750 degrees C", for combustion characteristics.
1) Unless otherwise noted, blankets without vapor-retarder membrane coverings, used in Interior partitions not subject to moisture.
b. Type II: Kraft-faced, Glass-Fiber Blanket Insulation: ASTM C 665 "Specification for Mineral-Fiber Blanket Thermal Insulation for Light Frame Construction and Manufactured Housing", Type II (non-reflective faced), Class C (faced surface not rated for flame propagation); Category I (membrane is a vapor barrier).
1) Unless otherwise noted, this type of insulation should only be used in conditions not "subject to view" (enclosed cavities) or in attics where a finished ceiling is provided and the attic is <u>not</u> used as a return air plenum.

c. Type III: Reinforced-Foil-Faced, Glass-Fiber Blanket Insulation: ASTM C 665 "Specification for Mineral-Fiber Blanket Thermal Insulation for Light Frame Construction and Manufactured Housing", Type III (reflective faced), Class A (faced surface with a foil-scrim or foil-scrim-kraft facing)

1) Unless otherwise noted, this product shall be used when the attic (although enclosed by a finished ceiling) is used as a return air plenum, or used in "exposed-to-view" exterior and interior walls and ceilings or attics subject to moisture and fire-rated conditions.

2. Thermal Resistance (R) values required (minimum) for blanket insulation, unless otherwise indicated on the drawings:
   a. Roof Blanket Insulation: R-30.
   b. Wall Blanket Insulation: R-19.
   c. Floor Blanket Insulation: R-30.
   d. Attic Spaces: All attic spaces shall have continuous insulation of the proper type and with a minimum thermal resistance "R" value of R-30 for insulation only. Where attic spaces have vertical elements above ceilings, these shall be insulated as part of the attic space to R-30 minimum.
3. Thickness: No more than will fit into the space available without compressing. Where insulation is confined between finishes, which would compress the material, high efficiency insulation shall be used to provide the required resistance value.

B. Sound Blanket:
1. Sound Attenuation Batts, unfaced, as manufactured by OWENS CORNING FIBERGLAS, 2-1/2" batts for wood or metal frame construction, complying with ASTM C 665 "Specification for Mineral-Fiber Blanket Thermal Insulation for Light Frame Construction and Manufactured Housing", Type I, and ASTM E 136 "Test Method for Behavior of Materials in a Vertical Tube Furnace at 750 degrees C".
   a. Flame Spread Index Maximum 25.
   b. Smoke Developed Index Maximum 50.

C. Sound Deadening Board: "SoundStop" 1/2 inch thick Sound Deadening Board, manufactured in accordance with ASTM C 208 "Specification for Cellulosic Fiber Insulating Board", as supplied by BLUE RIDGE FIBERBOARD.
1. Density: 17.5 - 18 pcf.
2. Thermal Conductivity 0.38.
3. Tensile Strength (parallel to surface): 150 psi.
4. Tensile Strength (perpendicular to surface): 600 psi.
5. Water Absorption by Volume, max. percent: 2 hour immersion, 7 percent max.
6. Expansion, 50 to 90 percent relative humidity: 0.5 percent.
7. Vapor Permeance, grains/hr/sq.ft.in. HG 5.
8. Flammability (per NFPA rating): 1 or slight.
9. R-Value 1.3.
10. Sound Transmission Coefficient (STC): 44 - 51.

D. Rigid Board:
1. Roof Board:
   a. In accordance with:

1) ASTM C 1289 "Specification for Faced Rigid Cellular Polyisocyanurate Thermal Insulation Board", Type II, isocyanurate with front and back asphalt paper-facers (balanced panel), conditioned "R" value of 5.60 per inch minimum, in accordance with ASTM E 84 "Test Method for Surface Burning Characteristics of Building Materials", and ASTM D 1621 “Test method for Compressive Properties of Rigid Cellular Plastics”.
   a) Flame Spread Index Maximum, core: 75 or less.
   b) Smoke Density Developed Index Maximum, core: 450 or less.
   c) Compressive strength: 20 PSI.
   d) 4' x 4' or 4' x 8' panels.
   e) Thickness: 6".

E. Acoustical Blanket:
   1. Provide 1" thick Black Fiberglass acoustical blanket complying with ASTM C 533 "Specification for Calcium Silicate Block and Pipe Thermal Insulation", Type III, and ASTM C 423 "Test Method for Sound Absorption and Sound Absorption Coefficients by the Reverberation Room Method".
      a. Flame Spread Index Maximum 25.
      b. Smoke Density Developed Index Maximum 50.

2.3 ACCESSORIES

A. Staples:
   1. Hammer type.

B. Wire:
   1. Sixteen (16) gage line wire.

C. All other materials such as fasteners (i.e. insulation netting, line wires, stick-pins), and retainers not specifically described, but required to complete the work, shall be as recommended by approved manufacturer, and installed by the Contractor. Contractor shall choose the appropriate fastener or system for the cavity space or area to be insulated without letting the insulation sag.
   1. Poultry Netting: As distributed by INSULATION MATERIALS.
      a. 2" hexagonal, 20 gage galvanized in rated assemblies.
   2. FSK Tape: As distributed by INSULATION MATERIALS.
      a. VENTURE TAPE product #1525CW.
   3. Welded Stud Stick Pins: As distributed by SUNBELT STUD WELDING.
      a. Provide low-carbon "mild" steel, with the following properties:
         1) Tensile Strength: 60,000 psi.
         2) Yield: 50,000 psi.
         3) Elongation: 20% (in 2 inches).
      b. Size: 12 gage.
      c. Length sufficient to hold insulation to underside of decking, and extended enough to allow self-locking washers to hold insulation in place without crushing the insulation.
      d. Spacing: 24 inches o.c.
         1) Pins shall be placed within 3 to 5 inches of all area edges.
      e. Self-Locking Washers:

1) 2 inch diameter, galvanized, compatible with welded stud stick pin size and gage.

PART 3 - EXECUTION

3.1 INSTALLATION

A. General:
1. All building(s) shall have a complete thermal envelope of thermal blanket or rigid board insulation.
a. Do not install insulation until the construction has progressed to the point that inclement weather will not damage or wet the insulation material.
b. Install in accordance with manufacturer's written recommendations.
c. Insulation shall fit snugly between framing members without voids. Fully insulate all areas between all framing members, cutting and fitting as required.
d. Attach insulation to inside face of framing members.
1) Wood Framing: Friction fit to keep from falling down within wall cavity. Attach with Hammer Staples at 6 inches on center with minimum staple penetration of 3/8 inch when insulation has a membrane facing.
2) Metal Framing: Friction fit to keep from falling down within the cavity and use line wire across metal studs. Omit wire and spot tape with FSK Tape when insulation has a membrane facing.
e. Vapor-Retarder Membrane: Shall be continuous and without unnecessary joints.
1) At roof structure and exterior walls, after securing the insulation facing flanges, provide FSK Tape over all of the insulation facing butt joints and all overlapping facing flanges, so as to create a continuous vapor-retarder membrane at underside of the roof deck and inside of walls.
2) Patch all tears, rips and holes in the vapor-retarder membrane.
f. Cut and fit insulation material around pipes, conduits and outlet boxes, as necessary to maintain the full integrity of the insulation.

B. At Wall Framing: Install thermal wall blanket insulation between all exterior wall framing members.

C. Sound Insulation:
1. Install sound attenuation batts between all interior wall framing members.
2. Install sound attenuation batts between all floor framing members.
3. Install sound deadening board over interior wall framing members.

D. Rigid Board Insulation:
1. Install per manufacturer's written recommendations.

E. Acoustical Blanket:
1. Install Acoustical Blanket where indicated and per manufacturer's written recommendations.

END OF SECTION

SECTION 073113 – SHINGLES

PART 1 - GENERAL

1.1 SUMMARY

A. This Section includes the following:
   1. Provide all material, labor, equipment and services necessary to completely install all asphalt/fiberglass shingle materials, accessories and other related items necessary to complete the Project as indicated by the Contract Documents.

B. Related Sections: The following Project Manual Sections contain requirements that relate to this section:
   1. ALL DIVISION 00 SPECIFICATION SECTIONS.
   2. ALL DIVISION 01 SPECIFICATION SECTIONS.
   3. 06 10 00 ROUGH CARPENTRY
   4. 07 21 00 INSULATION
   5. 07 60 00 SHEET METAL
   6. 07 72 00 ROOF ACCESSORIES
   7. 07 92 00 SEALANTS
   8. 09 91 00 PAINTING
   9. ALL SPECIFICATION SECTIONS IN THE FACILITY SERVICES SUBGROUP.
   10. ALL SPECIFICATION SECTIONS IN THE SITE AND INFRASTRUCTURE SUBGROUP.

1.2 REFERENCES

A. Standards:
   1. In accordance with the following standards:
      a. ARMA Asphalt Roofing Manufacturers Association
      b. NRCA National Roofing Contractors Association.
      c. SMACNA Sheet Metal and Air Conditioning Contractors' National Association, latest Edition, Architectural Sheet Metal Manual.

1.3 SUBMITTALS

A. Submit in accordance with Specification Section - SUBMITTAL PROCEDURES:
   1. Coordination Drawings.
      a. Submit installer's coordination drawings indicating the work of this section with that of related work of other sections for proper interface of the completed work. Installer shall coordinate and obtain approvals from the work of other related sections prior to submitting to the Architect.
   2. Product Data.
      a. Submit manufacturer’s standard color range for selection by the Architect.
   3. Shop Drawings.

a. Submit installer's coordination drawings indicating the work of this section with that of related work of other sections (DIV. 06, DIV. 07, DIV. 09, and the SPECIFICATION SECTIONS IN THE FACILITY SERVICES SUBGROUP) for proper interface of the completed work of this section.
b. Installer shall coordinate and obtain approvals from the work of other related sections prior to submitting to the Architect.

4. Samples.
   a. Provide 24 inch linear sample of each color and pattern selected.
5. Quality Assurance/Control Submittals:
   a. Certificates.
   b. Manufacturer's Written Instructions.
   c. Manufacturer's Field Reports.
6. Closeout Submittals in accordance with the following:
   a. Maintenance Data in accordance with Specification Section - PROJECT CLOSEOUT.
   b. Warranty in accordance with Specification Section - WARRANTIES.

1.4 QUALITY ASSURANCE

A. Qualifications:
1. Material Qualifications:
   a. Certification from roofing material supplier Corporate Officer that major roofing components including insulation, flashing, coatings, adhesives, roofing felt sheets; mastics; and sealants are compatible with all the other components of the roofing system and the warranties required herein.
   b. Be nationally recognized in roofing and waterproofing industry for at least ten (10) years.
   c. Provide local Field Representative to make periodic site visits, report work quality and job progress.
   d. Provide list of at least three (3) projects available for inspection employing same system within the last three years, within the same climate zone and 100 mile distance of project building.
   e. Be approved by Owner and the Architect.
   f. Provide Owner and the Architect proof/copy of material product liability insurance for all materials.
2. Installer Qualifications:
   a. Engage an experienced Installer who is certified in writing by the manufacturer listed herein as qualified to install manufacturer's product (or system) in accordance with manufacturer's warranty requirements.

B. Regulatory Requirements:
1. In accordance with Specification Section - REGULATORY REQUIREMENTS, and the following:
   a. CARB Materials and equipment used for this Project shall comply with the current applicable regulations of the California Air Resources Board (CARB) and the Environmental Protection Agency (EPA), in the area where the project is located.

C. Certificates:
1. Provide a letter on Contractor's Letterhead certifying work provided, meets or exceeds, the requirements of this Section.

D. Meetings:
1. Pre-installation: Scheduled by the Contractor prior to the start of work.
   a. Coordinate the work with all other related work.
   b. Identify any potential problems that may impede planned progress and proper installation of work regarding quality of installation and warranty requirements.
2. Progress Meetings: Scheduled by the Contractor during the performance of the work.
   a. Review for proper installation of work progress.
   b. Identify any installation problems and acceptable corrective measures.
   c. Identify any measures to maintain or regain project schedule of necessary.
3. Completion: Scheduled by the Contractor upon proper completion of the work.
   a. Inspect and identify any problems that may impede issuance of warranties or guaranties.
   b. Maintain installed work until the Notice of Substantial Completion has been executed.

E. Random Sampling:
1. Roofing Material:
   a. During course of work, Owner's Representative may secure samples of materials being used from job site and submit them to an independent laboratory for comparison to specified material.
   b. Should test results prove that a material does not comply with specified material:
      1) Roofing installed and found not to comply with the specifications shall be removed and replaced at no change in the contract price.
      2) Contractor shall pay for all re-testing required.

1.5 DELIVERY, STORAGE, AND HANDLING

A. Packing, Shipping, Handling, and Unloading:
1. Products shall be individually wrapped.
2. Products shall be handled in such a manner as to assure that they are free from dents, scratches and other damage.

B. Acceptance at Site:
1. Products must be in manufacturer's original unopened containers with labels indicating brand name, model, and grade.
2. Damaged products will not be accepted.

C. Storage and Protection:
1. Products shall be stored above ground on level platforms, six (6) inches above ground, allowing air circulation under stacked units.
   a. Cover materials with protective waterproof covering providing for adequate air circulation and ventilation.

1.6 PROJECT CONDITIONS

A. Existing Conditions:

1. Examine site and compare it with the drawings and specifications. Thoroughly investigate and verify conditions under which the work is to be performed. No allowance will be made for extra work resulting from negligence or failure to be acquainted with all available information concerning conditions necessary to estimate the difficulty or cost of the work.

1.7 WARRANTY

A. Contractor's General Warranty:
   1. In accordance with Specification Section - WARRANTIES.

B. Manufacturer's Warranty:
   1. Materials Warranty:
      a. Upon project completion and manufacturer's acceptance, the Contractor shall deliver to the Owner a limited Major Manufacturer's Roofing System Warranty, covering labor and materials, and shall warrant to repair or replace defective materials including labor and installation.
         1) Roofing Installer will review and inspect the installation of the roof membrane and the following:Installation of the roof deck (applicable for roofing installation), insulation, fasteners, roof flashing, custom roof curbs (including roof penetration flashing), all roofing sheet metal, details and surfacing.
         2) Warranty Period: Thirty (30) Years.

C. Installer's warranty:
   1. Workmanship Warranty:
      a. Upon project completion and acceptance, the subcontractor shall issue Owner a warranty against defective workmanship and materials.
         1) The subcontractor shall warranty to maintain the roof and flashing in a watertight condition for the period of years specified from the date of acceptance and shall be responsible for the repair of any failure that is the result of defects in materials and workmanship.
         2) The subcontractor shall obtain from the manufacturer and the General Contractor a co-endorsement of the Warranty.
            a) Warranty Period: Five (5) Years.

PART 2 - PRODUCTS

2.1 MANUFACTURERS

A. These products listed herein establish the size, pattern, color range and function selected by the Architect for this Project. Manufacturers that are listed as acceptable alternative manufacturers and substitutions must still comply with the requirements of this project and the products listed in order to be approved as an equivalent during the Submittal Process. If the acceptable alternative manufacturers listed or substitutions are not approved during the Submittal Process due to non-compliance with the contract documents, then the Contractor shall submit product specified.
   1. Specified shingle product manufacturer:
      a. MALARKEY ROOFING COMPANY "Legacy."

b. Acceptable shingle underlayment alternative manufacturers:
1) ATLAS ROOFING COMPANY "StormMaster LM50."
2) IKO ROOFING COMPANY "Grandeur"

2. Specified Ventilated Nailbase Insulation product manufacturer:
a. ATLAS ROOFING "ACFOAM CROSSVENT".
b. Acceptable Ventilated Nailbase Insulation alternative manufacturers:
1) GAF "Cornell Thermacal Nail Base".
2) HUNTER "Cool-Vent".
3) R-MAX "Vented Nailable Vase-3".

3. Specified waterproof underlayment manufacturer:
a. CERTAINTEED CORP "Winterguard".
b. Acceptable waterproof underlayment alternative manufacturers:
1) W.R. GRACE & CO. "Bituthene Ice and Water Shield".

4. Specified Ridge Vent manufacturer:
a. AIR VENT, INC. "Ridge Filtervent (Class A)".

5. Specified Vent Cover at Vertical Transition product manufacturer:
a. CORAVENT "Roof-2-Wall Vent"

6. Specified Vent Cover at Mechanical Well product manufacturer:
a. ATLAS "Techni-flo RV" system.

7. Specified Gutter Repair Product manufacturer:
a. SEALOFLEX. "SEALOFLEX and SEALOFLEX CT".

B. Products from other manufacturers not listed must submit in accordance with Specification Section - SUBSTITUTION PROCEDURES.

2.2 MATERIALS

A. Shingles:
1. Three-Dimensional, Fiberglass, Laminated Strip Shingles:
a. Mineral-surfaced, self-sealing, laminated, multiply overlay construction, fiberglass-based, strip asphalt shingles, complying with ASTM D 3018 "Specification for Class A Asphalt Shingles Surfaced with Mineral Granules", Type I.
b. Provide shingles with Class A fire-test-response classification that pass the wind-resistance-test requirements of ASTM D 3161 "Test method for Wind-Resistance of Asphat Shingles (Fan Induced Method)".
c. Provide hip and ridge shingles as required that are job-fabricated units cut from actual asphalt shingles used.

B. Metal Trim and Flashing:
1. Galvanized Steel Sheets:
a. G 90, hot-dip galvanized steel with coating designation according to ASTM A 653 "Specification for Steel Sheet, Zinc-Coated (Galvanized) or Zinc-Iron Alloy-Coated (Galvanealed) by the Hot-Dip Process", mill phosphatized where indicated for painting, 0.0276 inch (24 gage), unless otherwise indicated.
b. Metal Drip Edge:
1) Minimum 0.0276 inch (24 gage), painted to match roofing color selected.
a) Brake form to provide 3 inch roof deck flange, and 1-1/2 inch fascia flange with 3/8 inch drip at lower edge.
b) Furnish in 10 foot lengths.

c. Miscellaneous Metal Flashing:
   1) Job-cut to sizes and configuration required for backflashing, penetrations, curbs and boots, and other flashing needs that may be required for a complete roofing system.
d. Open-Valley Flashing (if required):
   1) Preformed, inverted "V" profile at center of valley and extending at least 9 inches in each direction from centerline of valley.

2. Lead Vent Pipe Flashing:
   a. ASTM B 749 "Specification for Lead and Lead Alloy Strip, Sheet, and Plate Products", Type L51121, copper-bearing sheet lead, minimum 4 lb/sq. ft. (0.0625 inch thick) minimum for burning (welding) unless otherwise indicated.
   b. Provide lead sleeve sized to slip over and turn down into pipe, soldered to skirt at slope of roof extending at least 4 inches from pipe onto roof.

2.3 ACCESSORIES

A. Ventilated Nailbase Insulation:
1. Polyisocyanurate bonded to a minimum 7/16" thick APA/TECO rated OSB (oriented strand board) to provide above-deck roof insulation with a nailable surface, and available with a code compliant ventilating airspace on spacers as recommended by the manufacturer, for use with shingles on slopes greater than 3:12. See drawings for thickness of Insulation Board - minimum LTTR R-Value of 5.7 per inch.
   a. In compliance with ASTM C 1289, Type V, Grade 2, minimum.
   b. UL Standard 790 (ASTM E 108):
      1) For use with Class A, B or C Shingles, Metal or Tile Roof Coatings.
   c. In compliance with CBC Chapter 26 for Foam Insulation.
   d. Air Space Requirement: 1.5".
   e. Dimensional Stability-ASTM D 2126 Less than 2 percent.
   f. Compressive Strength-ASTM D 1621 20 psi - 25 psi.
   g. Water Absorption:
      1) ASTM D 209 Less than 1.0 percent.
      2) ASTM D 2842 Less than 3.5 percent.
   h. Water Vapor Transmission-ASTM E 96 Less than 1.0 perm.
   i. Product Density-ASTM D 1622 Nominal 2.0 pcf.
   j. Flame Spread-ASTM E 84 40 - 60.
   k. Smoke Developed-ASTM E 84 50 - 170.
   l. Tensile Strength-ASTM D 1623 Greater than 730 psf.
2. Provide manufacturer's recommended weatherized fasteners for the depth of insulation and material substrate the insulation will be attached to, and spacing as recommended by the manufacturer for the wind uplift loads as indicated.

B. Felt Underlayment:
1. Type I, 36-inch wide, asphalt-saturated organic felt, complying with ASTM D 226 "Specification for Asphalt Saturated Organic Felt Used in Roofing and Waterproofing" (No. 15), or ASTM D 4869 "Specification for Asphalt-Saturated Organic Felt Underlayment Used in Steep Slope Roofing".
2. Type II, 36-inch wide, asphalt-saturated organic felt, complying with ASTM D 226 "Specification for Asphalt Saturated Organic Felt Used in Roofing and Waterproofing" (No. 30), or ASTM D 4869 "Specification for Asphalt-Saturated Organic Felt Underlayment Used in Steep Slope Roofing".

C. Waterproof Underlayment:
   1. Minimum 40 mil thick, self-adhering, polymer-modified, bituminous sheet membrane, complying with ASTM D 1970 "Specification for Self-Adhering Polymer Modified Bituminous Sheet Materials Used as Steep Roofing Underlayment for Ice Dam Protection".
   2. Provide primer when recommended by underlayment manufacturer.

D. Ridge Vent:
   1. Embossed aluminum 0.024 inches thick with PI-15004-PPG Duracron Multi-Pitch Roof Ridge Filtervent of 630 thermoset acrylic enamel as by "AIR VENT, INC."; with dry fiberglass weather filter.

E. Vent Cover at Vertical Transition:
   1. Provide venting at vertical transition of shingled roof to high vertical wall.
   2. Net Free Vent Area per lin. ft.: 6.75 sq ft.
   3. Manufacturer provided flashing is inadequate. Refer to SHEET METAL for flashing.
   4. Provide manufacturer's recommended end plugs. Seal ends of vent.

F. Vent Cover at Mechanical Well:
   1. Provide screen and ridge vent cover where sloped roof meets vertical wall.
   2. Cover: 24 ga steel.
   3. Prefinished. Architect to select from full range of standard colors.

G. Roll Roofing:
   1. Organic roofing felt saturated with asphalt and coated on both sides with an asphaltic compound, 36 inches wide, weighing at least 44 lb/square and complying with ASTM D 6380 "Specification for Asphalt Roll Roofing (Organic Felt)", Type II or III.
   2. Mineral-granular-surfaced, organic-felt-based, asphalt roll roofing, 36 inches wide, complying with ASTM D 6380 "Specification for Asphalt Roll Roofing (Organic Felt)", Type I.
   3. Mineral-granular-surfaced, glass-felt-based, asphalt roll roofing, 36 inches wide, complying with ASTM D 3909 "Specification for Asphalt Roll Roofing (Glass Felt) Surfaced With Mineral Granules".

H. Asphalt Plastic Cement:
   1. Non-asbestos fibrated asphalt cement, complying with ASTM D 4586 "Specification for Asphalt Roof Cement, Asbestos-Free".

I. Roll-Roofing Lap Cement:
   1. Non-asbestos asphalt lap cement, complying with ASTM D 3019 "Specification for Lap Cement Used with Asphalt Roll Roofing, Non Fibered, Asbestos Fibered, and Non Asbestos Fibered", Type III.

J. Fasteners:
   1. Use aluminum or hot-dip galvanized 11 gage, sharp-pointed, conventional roofing nails with barbed shanks, minimum 3/8 inch diameter head, and of sufficient length to penetrate 3/4 inch into solid decking or to penetrate through plywood sheathing.
      a. Where nails are in contact with flashing, prevent galvanic action by providing nails made from the same metal as that of the flashing.

b. Staples may be used in lieu of nails and shall be a minimum of 0.0625 inch thick, zinc-coated, steel roofing staples with minimum crown width of 15/16 inch, and of sufficient length to penetrate 3/4 inch into deck lumber or through plywood deck.

K. Gutter Repair Products:
1. Rust Inhibitor:
   a. Rust Inhibitor Primer compatible with manufacturer's gutter repair materials.
2. SEALOFLEX CT:
   a. Material: Synthetic Rubber.
   b. Thickness: 45 Mils.
   c. Elongation: 41 percent reinforced.
   d. Tensile Strength: 2,390 psi.
3. SEALOFLEX Polyester Fabric:
   a. Manufacturer's standard compatible with Synthetic Rubber coatings.

PART 3 - EXECUTION

3.1 EXAMINATION

A. Site Verification of Conditions:
1. Prior to the execution of the work under this specification section, inspect the installed work executed under other sections of this Project Manual which affect the execution of work under this specification section.
   a. Coordinate installation of shingles with flashing and other adjoining work to ensure proper sequencing. Do not install shingle roofing until all vent stacks and other penetrations through roofing have been installed and are securely fastened against movement.
   b. Do not commence installation of Asphalt Shingles until all unsatisfactory conditions are corrected.
   c. Do not install roofing on damp surfaces.
2. Report unacceptable conditions to the Architect. Do not begin work until unacceptable conditions have been corrected.
3. Execution of work under this specification section shall constitute acceptance of existing conditions.

3.2 PREPARATION

A. Coordination:
1. Coordinate work under this specification section with work specified under other sections to ensure proper and adequate interface of work.

B. Protection:
1. Protect all adjacent surfaces from drips, spray, air pollution of surrounding environment, and other damage from work under this specification section.
2. Distribute materials in a uniform and safe manner. Heavy concentrations of roofing materials on roof deck is prohibited.

C. Surface Preparation:

1. Prepare surface in accordance with manufacturer's written instructions and recommendations.
2. Clean substrates of substances (oil, grease, rolling compounds, incompatible primers, loose mill scale, etc.) which could impair bond of materials specified within this section.
3. Entire roof deck to receive Asphalt Shingles shall be swept clean and all knot holes covered with flashing and underlayment nailed to deck in accordance with manufacturer's approved recommendations.
4. All rough spots, sharp projections, and irregularities in the surface shall be removed or corrected.
5. Repair all holes in decking three inches in diameter or less with 22 gage galvanized sheet metal with at least a two inch overlap on all sides (seven inches in diameter maximum) - see Specification Section - SHEET METAL.
6. Repair all holes in decking three inches in diameter or larger with decking of same size and shape as existing decking, or with 3/4" exterior grade plywood properly blocked and flush with existing decking - see Specification Section - ROUGH CARPENTRY.
7. All flashing, metal drip edging and sheet metal accessories shall be on the job ready for installation.

3.3 INSTALLATION

A. General:
1. In accordance with manufacturer's written instructions and recommendations unless specifically noted otherwise.
   a. Comply with recommendations also from ARMA's "Residential Asphalt Roofing Manual" and "The NRCA Steep Roofing Manual".
2. In accordance with approved shop drawings.
3. In accordance with Regulatory Requirements.
4. Set plumb, level, and square.

B. Layout:
1. Lines shall be straight and true.

C. Ventilated Nailbase Insulation:
1. Install in accordance with wind uplift requirements, and the manufacturer's written recommendations for the roof deck substrate indicated. Space the joints at least 1/8" between panels for expansion and contraction. All fasteners shall be driven through the spacers to avoid cupping of the panels to the substrate below.

D. Underlayment: Approved roofing underlayment shall be laid in shingle method at right angles to slope of roof deck.
1. Apply 1 layer of underlayment horizontally over entire surface to receive asphalt shingles, lapping succeeding courses a minimum of 2 inches, end laps a minimum of 4 inches, and hip and valleys a minimum of 6 inches.
2. Fasten underlayment with sufficient number of noncorrosive roofing nails to hold underlayment in place until asphalt shingle installation.
3. Apply an additional layer of underlayment on roof decks with a slope of 2 to 4 inches per foot.
4. At closed valleys, center a 36 inch wide underlayment in valley and secure with only enough nails to hold in place until asphalt shingles are installed.
5. Lap roof underlayment over valley underlayment at least 6 inches.

E. Apply metal open valleys in compliance with ARMA and NRCA recommendations.
   1. Install a second underlayment shingle lapped at least 12 inches and sealed with plastic asphalt cement.
   2. Install a metal valley shingle lapped at least 9 inches and sealed with plastic asphalt cement.
   3. Apply woven and closed-cut valleys in compliance with ARMA and NRCA recommendations.

F. Install metal flashing and trim as indicated and according to details and recommendations of the "Asphalt Roofing" section of "The NRCA Steep Roofing Manual" and ARMA's "Residential Asphalt Roofing Manual".

G. Fasten asphalt shingles to roof sheathing with noncorrosive nails in accordance with manufacturer's written recommendations.
   1. Beginning at roof's lower edge, with a starter strip of roll roofing or inverted asphalt singles with tabs removed.
   2. Fasten asphalt shingles in the desired weather exposure pattern.
   3. Use number of fasteners per shingle as recommended by manufacturer (but in no case less than 6 fasteners per shingle minimum).
   4. Use vertical and horizontal chalk lines to ensure straight coursing.
      a. Cut and fit asphalt shingles at valleys, ridges and edges to provide maximum weather protection.
      b. Provide same weather exposure at ridges as specified for roof.
      c. Lap asphalt shingles at ridges to shed water away from direction of prevailing wind.
      d. Use fasteners at ridges of sufficient length to penetrate sheathing as specified.
      e. Pattern: 5-5/8 inch offset at succeeding courses.

H. Gutter Repair Procedures:
   1. Wire brush and clean all rust and old roofing material from gutters to expose bare metal.
   2. Coat metal with one layer of manufacturer's written recommended rust inhibitive primer at a minimum of 80 s.f. per gallon.
   3. Apply base layer of synthetic rubber at a minimum rate of 1 gallon per square.
   4. Embed one layer of Polyester Fabric into wet synthetic rubber.
   5. Surface with one layer of synthetic rubber at the rate of 2 gallons per square.

3.4 ADJUSTING

A. Replace any damaged materials installed under this section with new materials that meet specified requirements.

3.5 CLEANING

A. Clean in accordance with Specification Section - PROJECT CLOSEOUT.
   1. Clean any soiled surfaces immediately.
   2. Finish shall be clean and ready for the application of any additional finishes.
   3. In accordance with manufacturer's written instructions and recommendations.

END OF SECTION

SECTION 074000 – METAL PANELS

PART 1 - GENERAL

1.1 SUMMARY

A. This Section includes the following:
   1. Provide all material, labor, equipment and services necessary to completely install all materials, accessories and other related items necessary to complete the Project as indicated by the Contract Documents.
   2. This Section includes:
      a. Metal Roof Panels (Flat Sloped and Curved Roof Panels)
      b. Metal Wall Panels

B. Related Sections: The following Project Manual Sections contain requirements that relate to this section:
   1. ALL DIVISION 00 SPECIFICATION SECTIONS.
   2. ALL DIVISION 01 SPECIFICATION SECTIONS.
   3. 03 11 01 CONCRETE FORMWORK
   4. 03 30 00 CAST-IN-PLACE CONCRETE
   5. 04 22 00 CONCRETE MASONRY UNITS
   6. 05 12 00 STEEL AND FABRICATIONS
   7. 05 30 00 METAL DECK
   8. 07 21 00 INSULATION
   9. 07 51 13 BUILT-UP ROOFING
   10. 07 60 00 SHEET METAL
   11. 07 72 00 ROOF ACCESSORIES
   12. 09 91 00 PAINTING
   13. ALL SPECIFICATION SECTIONS IN THE FACILITY SERVICES SUBGROUP.
   14. ALL SPECIFICATION SECTIONS IN THE SITE AND INFRASTRUCTURE SUBGROUP.

1.2 REFERENCES

A. Standards:
   1. In accordance with the following Standards:
      a. AAMA American Architectural Manufacturers Association
      b. AATCC American Association of Textile Chemists and Colorists
      c. AISC American Institute of Steel Construction.
      d. FMG Factory Mutual Guide (Wind Uplift Requirements for FMG 1A-90 minimum for Metal Roof Panels), or UL Equivalent.
      e. ICC International Code Council (Formerly ICBO)
      f. MBMA Metal Building Manufacturers Association, "Metal Roofing Systems Design Manual".
      g. NAAMM National Association of Architectural Metal Manufacturers.
      h. SMACNA Sheet Metal and Air Conditioning Contractors National Association.
      i. TAPPI Technical Association of the Pulp and Paper Industry, Inc.

j. UL Underwriters Laboratories (FMG Equivalent for some manufacturers).

1.3 DEFINITIONS

A. The following definitions apply to this specification section:
1. Waterproof: Any material, treatment, or construction that resists flow or penetration of water (Means Illustrated Construction Dictionary, Third Edition, Unabridged)
2. Weathertight: Generally meaning the ability of the roofing system (including all roof panels, side seams, end laps, roof to wall flashing, ridge flashing, hip flashing, valley flashing, high side eave flashing, rake flashing, expansion joints, curb and penetration flashing, gutters, and wall panels) to prevent water intrusion under normal climatic conditions (including wind and snow conditions) for the area where the project is constructed. Also, the word "weathertighness" is a variation of the word "weathertight" and shall have the same definition applied. (Definition obtained from various manufacturers warranty literature.)

1.4 SYSTEM DESCRIPTION

A. Performance Requirements: It is the intention of this section and the drawings to form a guide for a complete and operable system. Any items not specifically noted but necessary for a complete and operable system shall be provided under this section.
1. General: Provide metal panel assemblies that comply with performance requirements specified as determined by testing manufacturers' standard assemblies similar to those indicated for this Project, by a qualified testing and inspecting agency.

B. Air Infiltration: Air leakage through assembly of not more than 0.06 cfm/sq. ft. of roof area when tested according to ASTM E 1680 "Test method for Rate of Air Leakage Through Exterior Metal Roof Panel Systems"at the following test-pressure difference:
1. Test-Pressure Difference: Negative 1.57 lbf/sq. ft.
2. Test-Pressure Difference: Positive and negative 1.57 lbf/sq. ft.
3. Positive Preload Test-Pressure Difference:
   a. Greater than or equal to 15.0 lbf/sq. ft. and the greater of 75 percent of building live load or 50 percent of building design positive wind-pressure difference.
4. Negative Preload Test-Pressure Difference:
   a. 50 percent of design wind-uplift-pressure difference.

C. Water Penetration: No water penetration when tested according to ASTM E 1646 "Test Method for Water Penetration of Exterior Metal Roof Panel Systems by Uniform Static Air Pressure Difference" at the following test-pressure difference:
1. Test-Pressure Difference: 2.86 lbf/sq. ft. for roof slopes less than or equal to 30 degrees.
2. Test-Pressure Difference:
   a. 20 percent of positive design wind pressure, but not less than 6.24 lbf/sq. ft. and not more than 12.0 lbf/sq. ft. for roof slopes steeper than 30 degrees.
3. Positive Preload Test-Pressure Difference:
   a. Greater than or equal to 15.0 lbf/sq. ft. and the greater of 75 percent of building live load or 50 percent of building design positive wind-pressure difference.
4. Negative Preload Test-Pressure Difference:
   a. 50 percent of design wind-uplift-pressure difference.

D. FMG Listing: Provide metal roof panels and component materials that comply with requirements in FMG 4471 as part of a panel roofing system and that are listed in FMG's "Approval Guide" for Class 1 or noncombustible construction, as applicable. Identify materials with FMG markings.
   1. Fire/Windstorm Classification: Class 1A-90.
   2. Hail Resistance:MH Moderate Hail.
   3. Hail Resistance:SH Severe Hail.

E. Structural Performance: Provide metal roof panel assemblies capable of withstanding the effects of gravity loads and the following loads and stresses within limits and under conditions indicated, based on testing according to ASTM E 1592 "Test method for Structural Performance of Sheet metal Roof and Siding Systems by Uniform Static Air Pressure Difference".
   1. Wind Loads: Determine loads based on the following minimum design wind pressures:
      a. Uniform pressure as indicated on Drawings.
   2. Deflection Limits: Engineer metal roof panel assemblies to withstand design loads with vertical deflections no greater than 1/180 of the span.

F. Seismic Performance: Provide metal roof panel assemblies capable of withstanding the effects of earthquake motions determined according to ASCE 7, and CBC 1616A.

G. Thermal Movements: Provide metal roof panel assemblies that allow for thermal movements resulting from the following maximum change (range) in ambient and surface temperatures by preventing buckling, opening of joints, overstressing of components, failure of joint sealants, failure of connections, and other detrimental effects. Base engineering calculation on surface temperatures of materials due to both solar heat gain and nighttime-sky heat loss.
   1. Temperature Change (Range): 120 deg F, ambient; 180 deg F, material surfaces.

1.5 SUBMITTALS

A. Submit in accordance with Specification Section - SUBMITTAL PROCEDURES:
   1. Coordination Drawings: Roof plans and Wall Elevations drawn to scale, coordinating penetrations and roof-and/or wall-mounted items. Show the following:
      a. Roof panels and attachments.
      b. Purlins and Rafters.
      c. Wall Panels and attachments.
      d. Roof-mounted items including roof hatches, equipment supports, pipe supports and penetrations, lighting fixtures, and items mounted on roof curbs.
      e. Wall-mounted items including supports, pipe supports and penetrations.
   2. Product Data.
      a. Material List and product information regarding material composition, product names, profiles, shapes, finishes, and application for each item.
      b. Submit manufacturer’s standard color range for selection by the Architect.
      c. Submit manufacturer's full color range (including any standard, premium and custom colors) of all metal panels and exposed components for selection by the Architect.
   3. Shop Drawings.

a. Submit shop drawings and Structural Calculations prepared by the manufacturer under the supervision of a registered Civil or Structural Engineer in the State of California, detailing fabrication and assembly of the work under this section, as well as procedures and diagrams. Include setting drawings, templates, and directions for installation of anchor bolts and other anchorage to be installed as unit of work of other related sections.
   1) Manufacturer shall prepare, review and approve all drawings and shop drawings prior to submittal to the Architect.
   2) Manufacturer shall approve of all details (including Architects standard details) prior to fabrication. If different details than the Architects details are required to satisfy manufacturers warranty requirements, submit the differences (highlighted as to differences) to the Architect for review.
   3) Show fabrication and installation layouts of metal roof panels; details of edge conditions, joints, lap seams, panel profiles, corners, anchorages, trim, flashings, closures, and accessories; and special details. Distinguish between factory- and field-assembled work.
   4) Include details of the following accessory items, at a scale of not less than 1-1/2 inches per 12 inches:
      a) Flashing and trim.
      b) Gutters.
      c) Downspouts.
      d) Roof curbs.

4. Samples.
   a. For each type of exposed finish required, prepared on Samples of size indicated below.
      1) Metal Panels: Provide 12 inches long by actual panel width.
      2) Trim and Closures: 12 inches long. Include fasteners and other exposed accessories.
      3) Roof Underlayment: 6 inch square samples.
      4) Vapor Retarders: 6 inch square samples.
      5) Water Barriers: 6 inch square samples.
      6) Accessories: 12 inch long samples for each type of accessory.
      7) Provide two (2) fasteners with any neoprene washers, metal washers, nuts or rivets for every type of fastener condition on this Project. Tag and label each fastener indicating that location and use for each fastener condition on this project.
5. Quality Assurance/Control Submittals:
   a. Installer Qualifications:
      1) Submit three (3) copies of manufacturer's Installer Certification.
   b. Manufacturer's Written Instructions:
      1) Submit three (3) copies of manufacturer's written instructions.
   c. Manufacturer's Field Reports:
      1) Submit three (3) copies of manufacturer's field reports.
   d. Engineering Calculations:
      1) Submit four (4) copies of engineering calculations computed and signed by a registered Civil or Structural Engineer in the State of California.
6. Closeout Submittals in accordance with the following:
   a. Maintenance Data in accordance with Specification Section - PROJECT CLOSEOUT.

b. Project Record Documents in accordance with Specification Section - PROJECT RECORD Documents.
c. Warranty in accordance with Specification Section - WARRANTIES.
1) Special Warranties:
a) Twenty (20) Year Weather Tightness Warranty.
b) Five (5) Year Installation Warranty.
c) Twenty (20) Year Finish Warranty.

1.6 QUALITY ASSURANCE

A. Qualifications:
1. Installer Qualifications:
a. Engage an experienced Installer who has successfully completed three (3) projects of similar scope and size to that indicated for this Project.
b. Engage an experienced Installer who is certified in writing by the manufacturer listed herein as qualified to install manufacturer's product (or system) in accordance with manufacturer's warranty requirements.
1) Installer shall have manufacturers signed Certified Installer Agreement as a rider to the warranty.
2. Manufacturer/Supplier Qualifications:
a. Firm experienced in successfully producing/supplying products similar to that indicated for this Project, with sufficient production/supply capacity to produce/supply required units without causing delay in the work.
b. Manufacturer shall inspect during installation and after completion and report to the Architect.
1) A factory trained representative approved by the manufacturer shall visit the project site a minimum of five (5) times, in order to review the installation of the metal panels, and provide a follow-up written report for the following periods in the construction schedule.
a) At the preliminary metal panel conference.
b) During the first week of installation, in order to review the installation requirements.
c) When the metal panel installation is approximately 50% complete
d) Upon completion of the metal panel installation.
e) When punch list and corrections have been completed

B. Regulatory Requirements:
1. In accordance with Specification Section - REGULATORY REQUIREMENTS, and the following:
a. CARB Materials and equipment used for this Project shall comply with the current applicable regulations of the California Air Resources Board (CARB) and the Environmental Protection Agency (EPA), in the area where the project is located.

C. Meetings:
1. Preliminary Metal Panel Conference: Before starting roof deck and wall panel, sheathing, wood joists or purlin and rafter construction, conduct conference scheduled by the Contractor at Project site. Review methods and procedures related to roof construction and metal roof panels including, but not limited to, the following:

a. Meet with Owner, Architect, Owner's insurer if applicable, testing and inspecting agency representative, metal panel installer, metal panel manufacturer's representative, deck, sheathing, wood joists or purlin and rafter installer, and installers whose work interfaces with or affects metal panels including installers of metal panel accessories and roof-mounted equipment.
   1) Review wood blocking layout (if any) required for metal panel fastener / anchorage system.
b. Coordinate the work with all other related work.
c. Review and finalize construction schedule and verify availability of materials, Installer's personnel, equipment, and facilities needed to make progress and avoid delays.
d. Review methods and procedures related to metal panel installation, including manufacturer's written instructions.
e. Examine conditions for compliance with requirements, including flatness and attachment to structural members.
f. Review structural loading limitations of metal panel substrate construction during and after roofing and wall construction.
g. Review metal panel flashings, special metal panel details, metal panel drainage, metal panel penetrations, equipment curbs, and condition of other construction that will affect metal panels.
h. Review governing regulations and requirements for insurance, certificates, and testing and inspecting if applicable.
i. Review temporary protection requirements for metal panels during and after installation.
j. Review metal panel observation and repair procedures after metal panel installation.
k. Identify any potential problems that may impede planned progress and proper installation of work regarding quality of installation and warranty requirements.

2. Progress Meetings: Scheduled by the Contractor for the proper performance of the work.
   a. Review for proper installation of work progress.
   b. Identify any installation problems and acceptable corrective measures.
   c. Identify any measures to maintain or regain project schedule of necessary.
3. Final Inspection: Scheduled by the Contractor upon proper completion of the work.
   a. Inspect and identify any problems that may impede issuance of warranties or guaranties.
   b. Maintain installed work until the Notice of Substantial Completion has been executed.

1.7 DELIVERY, STORAGE, AND HANDLING

A. Deliver components, sheets, metal panels, and other manufactured items so as not to be damaged or deformed. Package metal panels for protection during transportation and handling.

B. Unload, store, and erect metal panels in a manner to prevent bending, warping, twisting, and surface damage.

C. Stack metal panels on platforms or pallets, covered with suitable weathertight and ventilated covering. Store metal panels to ensure dryness. Do not store metal panels in contact with other materials that might cause staining, denting, or other surface damage.

D. Protect strippable protective covering on metal panels from exposure to sunlight and high humidity, except to extent necessary for period of metal panel installation.

1.8 PROJECT CONDITIONS

A. Weather Limitations: Proceed with installation only when existing and forecasted weather conditions permit assembly of metal panels to be performed according to manufacturers' written instructions and warranty requirements.

B. Field Measurements: Verify locations of metal panel framing and metal panel opening dimensions by field measurements before metal panel fabrication and indicate measurements on Shop Drawings.
   1. Established Dimensions: Where field measurements cannot be made without delaying the Work, either establish framing and opening dimensions and proceed with fabricating metal panels without field measurements, or allow for field-trimming of panels. Coordinate metal panel construction to ensure that actual building dimensions, locations of structural members, and openings correspond to established dimensions.

1.9 SEQUENCING AND SCHEDULING

A. Coordinate installation of roof curbs, equipment supports, and roof penetrations, which are specified in Specification Section - ROOF ACCESSORIES.

B. Coordinate metal panel assemblies with rain drainage work, flashing, trim, and construction of metal panel substrate, parapets, walls, and other adjoining work to provide a leakproof, secure, and noncorrosive installation.

1.10 WARRANTY

A. Contractor's General Warranty:
   1. In accordance with Specification Section - WARRANTIES.
   2. Installer shall have manufacturers signed Certified Installer Agreement as a rider to the warranty.

B. Manufacturer's Warranty:
   1. Metal Panel Finishes: Manufacturer's standard form in which manufacturer agrees to repair finish or replace metal panels that show evidence of deterioration of factory-applied finishes within specified warranty period.
      a. Fluoropolymer Finish: Deterioration includes, but is not limited to, the following:
         1) Color fading more than 5 Hunter units when tested according to ASTM D 2244 "Practice for Calculation of Color Tolerances and Color Differences from Instrumentally Measured Coor Coordinates".
         2) Chalking in excess of a No. 8 rating when tested according to ASTM D 4214 "Standard Test Methods for Evaluating the Degree of Chalking of Exterior Paint Films".
         3) Cracking, checking, peeling, or failure of paint to adhere to bare metal.
      b. Finish Warranty Period: 20 years from date of Substantial Completion.

1) All costs for Warranty shall be included in the bid price. There shall be no additional costs associated with the implementation or maintaining of the warranty.

2. Weathertightness Warranty for Standing-Seam Metal Roof Panels:
   a. Manufacturer's standard form in which manufacturer agrees to repair or replace standing-seam metal roof panel assemblies that fail to remain weathertight, including leaks, within specified warranty period.
      1) Warranty shall include roof panel side seams, end laps, roof to wall flashing, ridge flashing, hip flashing, valley flashing, high side eave flashing, rake flashing, approved expansion joints, approved curb and penetration flashing, approved gutters and built-in gutters, and approved wall systems.
      2) A Factory trained manufacturer representative approved by the manufacturer shall inspect during and at completion of installation and certify that the system is acceptable to the manufacturer's weathertightness standards.
   b. Warranty Period: 20 years from date of Substantial Completion.

C. Installer's Warranty:
   1. In accordance with the terms of the Specification Section - WARRANTIES
      a. Warranty Period Five (5) years.

PART 2 - PRODUCTS

2.1 MANUFACTURERS

A. These products listed herein establish the size, pattern, color range and function selected by the Architect for this Project. Manufacturers that are listed as acceptable alternative manufacturers and substitutions must still comply with the requirements of this project and the products listed in order to be approved as an equivalent during the Submittal Process. If the acceptable alternative manufacturers listed or substitutions are not approved during the Submittal Process due to non-compliance with the contract documents, then the Contractor shall submit product specified.
   1. Specified Flat Sloped Roof Panel product manufacturer:
      a. NCI (CENTRIA) BR5-36.
   2. Specified Wall Panel product manufacturer:
      a. NCI (CENTRIA) (Inverted Box Rib) IBR5-36.
      b. Acceptable alternative manufacturers:
         1) AEP SPAN REVERSED BOX RIB.
   3. Specified Vapor Retarder:
      a. REEF INDUSTRIES GRIFFOLYN T-65.
   4. Specified Roof Underlayment product manufacturer:
      a. TYPAR ROOF WRAP 30.
   5. Specified Water Barrier (also qualifies as an "Air Barrier"):
      a. TYVEK COMMERCIAL WRAP.
      b. Acceptable alternative manufacturers:
         1) TYPAR METRO WRAP.
   6. Specified Ice and Water Shield:
      a. GCP APPLIED TECHNOLOGIES; CE and WATER SHIELD HT.

1) Formerly GRACE CONSTRUCTION PRODUCTS.

b. Acceptable alternative manufacturers:

1) CARLISLE COATINGS & WATERPROOFING CCW WIP 300HT.

7. Specified Insulation:

a. Acoustical Fiberglass OWENS-CORNING FIBERGLASS.

b. Rigid Board RMAX - "RE-COVER BOARD-3".

B. Products from other manufacturers not listed must submit in accordance with Specification Section - SUBSTITUTION PROCEDURES.

2.2 MATERIALS

A. Properties:

1. Panels: Metallic-Coated Steel Sheet Prepainted with Coil Coating composed of steel sheet metallic coated by the hot-dip process and prepainted by the coil-coating process to comply with ASTM A 755 "Standard Specification for Steel Sheet, Metallic Coated by the Hot-Dip Process and Prepainted by the Coil-Coating Process for Exterior Exposed Building Products". See Schedule Article at the end of this section for profiles and manufacturer/product names, gages, application and finish requirements.

a. Zinc-Coated (Galvanized) Steel Sheet: ASTM A 653 "Standard Specification for Steel Sheet, Zinc-Coated (Galvanized) or Zinc-Iron Alloy-Coated (Galvannealed) by the Hot-Dip Process", G90 coating designation; structural quality.

b. Aluminum-Zinc Alloy-Coated Steel Sheet: ASTM A 792 "Standard Specification for Steel Sheet, 55 percent Aluminum-Zinc Alloy-Coated by the Hot-Dip Process", Class AZ50 coating designation, Grade 50; structural quality.

2. Flashing and Trim: Formed from zinc-coated (galvanized) steel sheet or aluminum-zinc alloy-coated steel sheet (minimum thickness and material to match gage of Metal Panels, unless noted otherwise) pre-painted with coil coating. Provide custom profile shape flashing and trim as required to seal against weather and to provide finished appearance. Locations include, but are not limited to, eaves, rakes, corners, bases, framed openings, ridges, fascia, and fillers. Finish flashing and trim with same finish system as adjacent metal panels. All pieces shall have self-hemmed edges fully pre-finished. No raw or field painted cut-edges will be permitted.

a. Provide components required for a complete metal panel assembly including trim, copings, fascia, corner units, closures, clips, flashings, sealants, gaskets, fillers, closure strips, and similar items. Match material and finish of metal panels, unless otherwise indicated.

b. Exactly matching materials, gage of Metal Panels, profile, texture and pre-finish.

c. Supply in continuous lengths as long as possible with minimal seams the full extent of the roof.

d. As required for a pre-finished, weathertight assembly.

e. All metal work that comes in contact with and/or is an accessory to the metal panels shall be provided and installed by the Metal Panel Manufacturer from the same materials as the Metal Panels.

f. Mylar-Coated Tape: 1/4 inch x 1 inch with PSA one side and Mylar one side where required by the manufacturer.

3. Gutters: Formed from zinc-coated (galvanized) steel sheet or aluminum-zinc alloy-coated steel sheet (minimum thickness to match gage of Metal Panels, unless noted otherwise) pre-painted with coil coating. Match profile of trim, complete with end pieces, outlet tubes, and other special pieces as required. Fabricate in minimum 96-inch- long sections, sized according to SMACNA's "Architectural Sheet Metal Manual." Furnish gutter supports spaced 36 inches o.c., fabricated from same metal as gutters, unless noted otherwise. Provide bronze, copper, or aluminum wire ball strainers at outlets. Finish gutters to match metal roof panels.
4. Downspouts: Formed from zinc-coated (galvanized) steel sheet or aluminum-zinc alloy-coated steel sheet (minimum thickness to match gage of Metal Panels) pre-painted with coil coating; in 10-foot- long sections, complete with formed elbows and offsets, unless noted otherwise. Finish downspouts to match metal roof panels.
5. Roof Curbs: Fabricated from 0.0747-inch- thick, zinc-coated (galvanized) steel sheet or aluminum-zinc alloy-coated steel sheet pre-painted with coil coating, with welded top box and bottom skirt, and integral full-length cricket, unless noted otherwise. Fabricate curb sub-framing of minimum 0.0747-inch- thick, angle-, C-, or Z-shaped steel sheet, unless noted otherwise. Fabricate curb and sub-framing to withstand indicated loads, of size and height indicated. Finish roof curbs to match metal roof panels.
   a. Insulate roof curb with 1-inch- thick minimum, rigid insulation.

B. Vapor Retarder: Provide GRIFFOLYN "T-65".
1. Performance Requirements:
   a. Water Vapor Permeance 0.038 grams/hr·ft2·in·Hg.
      1) Per ASTM E-96 "Standard Test Methods for Water Vapor Transmission of Materials".
2. Accessories:
   a. Seam Tape GRIFFOLYN "FAB TAPE".
   b. Repair Tape GRIFFOLYN "GRIFF-TAPE".

C. Roof Underlayment: Provide "TYPAR ROOF WRAP 30" with compatible lap seam tape, or approved equivalent.
1. Performance Requirements:
   a. Gurley Hill (TAPPI T-460): Greater than 2500 sec/100cc.
   b. Water Vapor Transmission per ASTM E-96 "Standard Test Methods for Water Vapor Transmission of Materials", Method A:
      1) Greater than 13 perms.
   c. Water Penetration Resistance per AATCC-127: 165 cm on Hydrostatic Head.
   d. Trapezoidal Test per ASTM D 5733 "Standard Test Method for Tearing Strength of Nonwoven Fabrics by the Trapezoid Procedure":
      1) Equal to 68 / 67.

D. Water Barrier (also qualifies as an "Air Barrier"): Provide "TYVEK" "Commercial Wrap" with compatible lap seam tape, or approved equivalent, that complies with 60 Water Resistant, Grade D, in accordance with CBC Sections 1404.2 and 2510.6.
1. Provide manufacturer's preformed tape and recommended cap fasteners for attachment.
2. Seam and Repair Tape: DUPONT "TYVEK 3" WIDE TAPE".

E. Ice and Water Shield: Self-Adhering, Polyethylene-Faced Sheet, ASTM D 1970 "Standard Specification for Self-Adhering Polymer Modified Bituminous Sheet Materials Used as Steep Roofing Underlayment for Ice Dam Protection", 40 mils thick minimum, elongation from 250 percent to 300 percent, consisting of slip-resisting polyethylene-film reinforcing and top surface laminated to SBS-modified asphalt adhesive, with release-paper backing; cold applied.

F. Insulation:
1. Acoustical Fiberglass: ASTM C 665 "Standard Guide for Determination of the Thermal Resistance of Low-Density Blanket-Type Mineral Fiber Insulation", type indicated below; consisting of fibers manufactured from glass, Class 1, sized to fit the interior liner panel profile.
   a. Type I (blankets without membrane covering), passing ASTM E 136 "Standard Test Method for Behavior of Materials in a Vertical Tube Furnace at 750 degrees C", for combustion characteristics.
2. Roof Curb (1 inch thick minimum unless otherwise noted):
   a. Un-faced, Glass-Fiber Board Insulation: ASTM C 612 "Standard Specification for Mineral Fiber Block and Board Thermal Insulation", Type IA or Types IA and IB; with maximum flame-spread and smoke-developed indexes of 25 and 50, respectively; and with a nominal density of 3 lb/cu. ft. and thermal resistivity of 4.3 deg F x h x sq. ft./Btu x in. at 75 deg F.
3. Rigid Board (1-1/2 inch thick minimum unless otherwise noted):
   a. Between framing members.
      1) In accordance with ASTM C 1289 "Standard Specification for Faced Rigid Cellular Polyisocyanurate Thermal Insulation Board", Type II, Class 1, isocyanurate with top and bottom surface glass fiber/organic mat facer on both sides (balanced panel), conditioned "R" value of 5.70 per inch.
         a) Flame Spread Index: 0 - 25, in accordance with ASTM E84 "Standard Test Method for Surface Burning Characteristics of Building Materials".
         b) Smoke Density Developed Index: 0 - 450 in accordance with ASTM E84 "Standard Test Method for Surface Burning Characteristics of Building Materials".
         c) Compressive Strength: 20 PSI, in accordance with ASTM D 1621 "Standard Test Method for Compressive Properties Of Rigid Cellular Plastics".
         d) 4' x 4' or 4' x 8' panels.

G. Furring:
1. General: Comply with ASTM C 754 "Standard Specification for Installation of Steel Framing Members to Receive Screw-Attached Gypsum Panel Products" for conditions indicated.
   a. Steel Sheet Components: Complying with ASTM C 645 "Standard Specification for Nonstructural Steel Framing Members" requirements for metal and with ASTM A 653 "Standard Specification for Steel Sheet, Zinc-Coated (Galvanized) or Zinc-Iron Alloy-Coated (Galvannealed) by the Hot-Dip Process", G60, hot-dip galvanized zinc coating.
2. Hat Channels (Subgirts): In accordance with ASTM C 645 "Standard Specification for Nonstructural Steel Framing Members".
   a. Minimum Base Metal Thickness: Appropriate to depth indicated.
   b. Depth: As indicated.

3. Cold-Rolled Channels: Thickness appropriate to span, bare steel with minimum 1/2-inch-wide flange.
   a. Depth: As indicated.
   b. Furring Brackets: Adjustable, corrugated-edge type of steel sheet with minimum bare steel thickness of 0.0747 inch.
   c. Tie Wire: ASTM A 641 "Standard Specification for Zinc–Coated (Galvanized) Carbon Steel Wire", Class 1 zinc coating, soft temper, 0.0625-inch-diameter wire, or double strand of 0.0475-inch-diameter wire.
4. Zee Channels:
   a. At Roofs: Provide in depth as indicated.
   b. At Walls: Provide in depth as indicated.
      1) Zee Channels: With slotted or non-slotted web, face flange of 1-1/4 inches, wall attachment flange of 7/8 inch, minimum bare metal thickness of 0.059 inch, and depth required to fit insulation thickness indicated.

2.3 ACCESSORIES

A. Profile Closures:
   1. Metal:
      a. Provide metal closures, fabricated of same metal as metal roof panels.
   2. Neoprene: Concealed from view:
      a. Provide closed-cell, expanded, cellular, rubber or crosslinked, polyolefin-foam or closed-cell laminated polyethylene; minimum 1-inch-thick, flexible closure strips; cut or pre-molded to match metal panel profile. Provide closure strips where indicated or necessary to ensure weathertight construction and to prevent nesting of birds or insects.

B. Clips: Minimum 0.0598-inch-thick, Galvanized or stainless steel panel clips per manufacturer's written recommendations (stainless steel clips only for aluminum or stainless panels) designed to withstand negative-load requirements.
   1. Compatible material and size with Standing Seam Roof System.

C. Cleats: Mechanically seamed cleats formed from minimum 0.0359-inch-thick, stainless-steel.

D. Backing Plates: Provide metal backing plates at panel end splices, fabricated from non-corrosive material recommended in writing by manufacturer.

E. Sealants:
   1. Sealant Tape: Pressure-sensitive, 100 percent solids, gray polyisobutylene compound sealant tape with release-paper backing. Provide permanently elastic, nonsag, nontoxic, nonstaining tape 1/2 inch wide and 1/8 inch thick.
   2. Joint Sealant: ASTM C 920 "Standard Specification for Elastomeric Joint Sealants"; elastomeric polyurethane, polysulfide, or silicone sealant; of type, grade, class, and use classifications required to seal joints in metal roof panels and remain weathertight; and as recommended in writing by metal roof panel manufacturer.
   3. Butyl-Rubber-Based, Solvent-Release Sealant: In accorance with ASTM C 1311 "Standard Specification for Solvent Release Sealants".

F. Fasteners:

1. Self-tapping screws, bolts, nuts, self-locking rivets and bolts, end-welded studs, and other suitable fasteners designed to withstand design loads. Provide exposed fasteners with heads matching color of metal panels by means of plastic caps or factory-applied coating.
    a. Fasteners for Metal Panels: Self-drilling or self-tapping type 304 stainless hex washer head, with EPDM or PVC washer under heads of fasteners bearing on weather side of metal roof panels.
    b. Fasteners for Flashing and Trim: Blind fasteners or self-drilling screws with hex washer head.
        1) Blind Fasteners: Stainless Steel Blind Rivets.
    c. Fasteners for Metal Framing: Of type, material, size, corrosion resistance, holding power, and other properties required to fasten steel members to substrates.
    d. Bituminous Coating: Cold-applied asphalt mastic, SSPC-Paint 12, compounded for 15-mil dry film thickness per coat. Provide inert-type noncorrosive compound free of asbestos fibers, sulfur components, and other deleterious impurities.

2.4 FABRICATION

A. General: Fabricate and finish metal panels and accessories at the factory to greatest extent possible, by manufacturer's standard procedures and processes, as necessary to fulfill indicated performance requirements demonstrated by laboratory testing. Comply with indicated profiles and with dimensional and structural requirements.
    1. Fabricate panels in longest practical lengths possible (20 foot minimum) to minimize seaming and lapping. See drawings for Curved Roof panel lengths for longer length and lapping requirements.
    2. Sound Control: Where sound-absorption requirements are indicated for liner panels, fabricate with 1/8 inch diameter holes at 3/8" o.c. staggered with a 10 percent free area.

B. Provide panel profile, including major ribs for full length of panel.

C. Fabricate metal panel joints with factory-installed butyl sealant that provide a tight seal and prevent metal-to-metal contact, in a manner that will minimize noise from movements within panel assembly.

D. Fabricate flashing and trim to comply with recommendations in SMACNA's "Architectural Sheet Metal Manual" that apply to the design, dimensions, metal, and other characteristics of item indicated.
    1. Form exposed sheet metal accessories that are without excessive oil canning, buckling, and tool marks and that are true to line and levels indicated, with exposed edges folded back to form hems.
    2. Seams for Other Than Aluminum: Fabricate nonmoving seams in accessories with flat-lock seams. Tin edges to be seamed, form seams, and solder.
    3. Sealed Joints: Form non-expansion but movable joints in metal to accommodate elastomeric sealant to comply with SMACNA standards.
    4. Conceal fasteners and expansion provisions where possible. Exposed fasteners are not allowed on faces of accessories exposed to view.
    5. Fabricate cleats and attachment devices from same material as accessory being anchored or from compatible, noncorrosive metal recommended by metal roof panel manufacturer.
        a. Size: As recommended by SMACNA's "Architectural Sheet Metal Manual" or metal roof panel manufacturer for application but not less than thickness of metal being secured.

2.5 FINISHES

A. Comply with NAAMM's "Metal Finishes Manual for Architectural and Metal Products" for recommendations for applying and designating finishes.

B. Protect mechanical and painted finishes on exposed surfaces from damage by applying a strippable, temporary protective covering before shipping.

C. Appearance of Finished Work: Variations in appearance of abutting or adjacent pieces are acceptable if they are within one-half of the range of approved Samples. Noticeable variations in the same piece are not acceptable. Variations in appearance of other components are acceptable if they are within the range of approved Samples and are assembled or installed to minimize contrast.

D. Exterior Finishes: Apply the following coil coating, as specified or indicated on Drawings for all exterior metal panels.
   1. High-Performance Organic Finish: Prepare, pretreat, and apply coating to exposed metal surfaces (both sides of panel when both sides are exposed to view) to comply with coating and resin manufacturers' written instructions.
      a. Fluoropolymer Three-Coat System: Manufacturer's standard three-coat, thermocured system consisting of specially formulated inhibitive primer, fluoropolymer color coat, and clear fluoropolymer topcoat, with both color coat and clear topcoat containing not less than 70 percent polyvinylidene fluoride resin by weight, with a minimum total dry film thickness of 1.5 mil; complying with physical properties and coating performance requirements of ASTM D 2247 "Standard Practice for Testing Water Resistance of Coatings in 100 percent Relative Humidity", except as modified below:
         1) Humidity Resistance: 2000 hours.
         2) Water Resistance: 2000 hours.
   2. Durability: Provide coating field tested under normal range of weather conditions for a minimum of 20 years without significant peel, blister, flake, chip, crack, or check in finish; without chalking in excess of a chalk rating of 8 according to ASTM D 4214 "Standard Test Methods for Evaluating the Degree of Chalking of Exterior Paint Films"; and without fading in excess of 5 Hunter Units.
   3. Color: "Custom Colors" as selected by the Architect.

PART 3 - EXECUTION

3.1 EXAMINATION

A. Examine substrates, areas, and conditions, with Installer present, for compliance with requirements for installation tolerances, metal panel supports, and other conditions affecting performance of work.
   1. Examine primary and secondary metal panel framing to verify that rafters, purlins, angles, channels, and other structural panel support members and anchorages have been installed within alignment tolerances required by metal panel manufacturer.

2. Examine solid roof sheathing to verify that sheathing joints are supported by framing or blocking and that installation is within flatness tolerances required by metal panel manufacturer.

B. Examine roughing-in for components and systems penetrating metal panels to verify actual locations of penetrations relative to seam locations of metal panels before metal panel installation.

C. Proceed with installation only after unsatisfactory conditions have been corrected.

3.2 PREPARATION

A. Clean substrates of substances harmful to insulation, including removing projections capable of interfering with insulation attachment.
   1. When applying Ice and Water Shield products, clean and prime the substrates in accordance with the manufacturer's written recommendations.

B. Install flashings and other sheet metal to comply with requirements specified in Specification Section SHEET METAL flashing and trim.

C. Install fascia and copings to comply with SMACNA requirements specified in Specification Sections - SHEET METAL and ROOF ACCESSORIES.

D. Miscellaneous Framing: Install subpurlins, eave angles, furring, and other miscellaneous metal panel support members and anchorage according to metal panel manufacturer's written recommendations.

3.3 INSTALLATION

A. Roof Panel Installation:
   1. Metal Roof Panel over Metal Roof Deck:
      a. Place the vapor retarder on metal roof decks within the zee furring. Lap vapor retarder joints 6 inches minimum and adhesively attach in accordance with roofing manufacturer's written recommendations and in accordance with manufacturer's warranty requirements, to provide a continuous uninterrupted membrane. Tape all joints with compatible tape. Repair any holes or damage to vapor retarder with compatible repair tape.
      b. All fastening shall be done in accordance with FMG 1A-90 and manufacturer's written recommendations for the type of panel and fastening system required.
         1) Submit fastening schedule along with all shop drawings showing the type of fastener and the spacing required.
      c. Insulation Board: Install insulation boards over roof deck on entire roof surface in thicknesses as indicated on the drawings.
         1) Install insulation board with long joints in continuous straight lines, perpendicular to roof slopes with end joints staggered between rows. Tightly butt substrate boards together.
         2) Erect insulation horizontally and hold in place with zee furring spaced in accordance with wind uplift requirements. Securely attach narrow flanges of furring members to deck with welds in accordance with wind uplift requirements.

d. Place a layer of vapor retarder over installed insulation boards. Lap vapor retarder joints 6 inches minimum and adhesively attach in accordance with roof underlayment manufacturer's written recommendations and in accordance with manufacturer's warranty requirements, to provide a continuous uninterrupted membrane. Tape all joints with compatible tape. Repair any holes or damage to vapor retarder with compatible repair tape.

2. Metal Roof Panel Installation:
   a. General: Provide metal roof panels of full length from eave to ridge, unless otherwise indicated or restricted by shipping limitations. Anchor metal panels and other components of the Work securely in place, with provisions for thermal and structural movement.
      1) Provide Ice and Water Shield at all eaves, ridges, hips, valleys & gutters in accordance with roof panel manufacturer's written recommendations.
      2) Field cutting of metal panels by torch is not permitted.
      3) Install panels perpendicular to purlins.
      4) Rigidly fasten ridge end of flat sloped metal roof panels and allow eave end free movement due to thermal expansion and contraction. Predrill panels.
      5) Provide metal closures at peaks, rake edges, rake walls and each side of ridge and hip caps.
      6) Flash and seal metal panels with profile closures at eaves, rakes, and at perimeter of all openings. Fasten with self-tapping screws.
      7) Locate and space fastenings in uniform vertical and horizontal alignment.
      8) Install ridge and hip caps as metal panel work proceeds.
      9) All panels shall be fabricated in continuous lengths whenever possible to eliminate lap seams. When lap seams are unavoidable, locate panel splices over, but not attached to, structural supports. Locations of lap seams shall be submitted to the Architect for review as part of the submittal process. Panels that require lap seams shall be in the longest possible lengths to minimize the overall number of lap seams per roof area.
         a) Provide ice and water shield at all lap joints in accordance with metal roof panel manufacturer's written recommendations for a watertight seal. Follow manufacturer's cleaning and priming recommendations prior to application of this product.
         b) Length of lap seals shall be in accordance with manufacturer's warranty requirements for watertight seals.
      10) Lap metal flashing over metal panels to allow moisture to run over and off the material.
3. Fasteners:
   a. Use stainless-steel fasteners for surfaces exposed to the exterior and galvanized steel fasteners for surfaces exposed to the interior.
4. Metal Protection: Where dissimilar metals will contact each other or corrosive substrates, protect against galvanic action by painting contact surfaces with bituminous coating, by applying rubberized-asphalt underlayment to each contact surface, or by other permanent separation as recommended by metal roof panel manufacturer.
5. Joint Sealers: Install gaskets, joint fillers, and sealants where indicated and where required for weatherproof performance of metal roof panel assemblies. Provide types of gaskets, fillers, and sealants indicated or, if not indicated, types recommended by metal panel manufacturer.
   a. Seal metal panel end laps with double beads of tape or sealant, full width of panel. Seal side joints where recommended by metal panel manufacturer.

b. Prepare joints and apply sealants to comply with requirements in Specification Section - SEALANTS.

B. Exterior Wall Panel System:

1. Wall Panel Installation over Wood Framing:
   a. Place the one layer of the water barrier on wall framing. Lap water barrier joints 6 inches minimum and adhesively attach in accordance with water barrier manufacturer's written recommendations and in accordance with manufacturer's warranty requirements, to provide a continuous uninterrupted membrane. Tape all joints with compatible tape. Repair any holes or damage with compatible tape.
   b. Provide metal wall panels of full length from sill to top plate, unless otherwise indicated or restricted by shipping limitations. Anchor metal wall panels and other components of the Work securely in place, with provisions for thermal and structural movement.
2. Fasteners:
   a. Use stainless-steel fasteners for surfaces exposed to the exterior and galvanized steel fasteners for surfaces exposed to the interior.
      1) All fastening shall be done in accordance with manufacturer's written recommendations for the type of panel and fastening system required.
         a) Submit fastening schedule along with all shop drawings showing the type of fastener and the spacing required.
         b) Locate and space fastenings in uniform vertical and horizontal alignment.
   b. Field cutting of metal wall panels by torch is not permitted.
      1) Install panels perpendicular to wall blocking or subgirts.
      2) Provide metal and neoprene closures at bottom and top of metal wall panels.
      3) Flash and seal metal wall panels with weather closures at perimeter of all openings. Fasten with self-tapping screws.
      4) Locate and space fastenings in uniform vertical and horizontal alignment.
      5) All panels shall be fabricated in continuous lengths whenever possible to eliminate lap seams. When lap seams are unavoidable, locate panel splices over, but not attached to, structural supports. Locations of lap seams shall be submitted to the Architect for review as part of the submittal process. Panels that require lap seams shall be in the longest possible lengths to minimize the overall number of lap seams per wall area.
         a) Length of lap seals shall be in accordance with manufacturer's warranty requirements for watertight seals.
      6) Lap metal flashing over metal wall panels to allow moisture to run over and off the material.
3. Metal Protection: Where dissimilar metals will contact each other or corrosive substrates, protect against galvanic action by painting contact surfaces with bituminous coating, by applying rubberized-asphalt underlayment to each contact surface, or by other permanent separation as recommended by metal wall panel manufacturer.
4. Joint Sealers: Install gaskets, joint fillers, and sealants where indicated and where required for weatherproof performance of metal wall panel assemblies. Provide types of gaskets, fillers, and sealants indicated or, if not indicated, types recommended by metal wall panel manufacturer.
   a. Seal metal wall panel end laps with double beads of tape or sealant, full width of panel. Seal side joints where recommended by metal wall panel manufacturer.
   b. Prepare joints and apply sealants to comply with requirements in Specification Section - SEALANTS.

C. Accessory Installation:
1. General: Install accessories with positive anchorage to building and weathertight mounting and provide for thermal expansion. Coordinate installation with flashings and other components.
   a. Install components required for a complete metal panel assembly including trim, copings, ridge closures, seam covers, flashings, sealants, gaskets, fillers, closure strips, and similar items.
2. Flashing and Trim: Comply with performance requirements, manufacturer's written installation instructions, and SMACNA's "Architectural Sheet Metal Manual." Provide concealed fasteners where possible, and set units true to line and level as indicated. Install work with laps, joints, and seams that will be permanently watertight and weather resistant.
   a. Install exposed flashing and trim that is without excessive oil canning, buckling, and tool marks and that is true to line and levels indicated, with exposed edges folded back to form hems. Install sheet metal flashing and trim to fit substrates and to result in waterproof and weather-resistant performance.
   b. Expansion Provisions: Provide for thermal expansion of exposed flashing and trim. Space movement joints at a maximum of 10 feet with no joints allowed within 24 inches of corner or intersection. Where lapped or bayonet-type expansion provisions cannot be used or would not be sufficiently weather resistant and waterproof, form expansion joints of intermeshing hooked flanges, not less than 1 inch deep, filled with mastic sealant (concealed within joints).
3. Gutters: Join sections with riveted and soldered or lapped and sealed joints. Attach gutters to eave with gutter hangers spaced not more than 4 feet o.c. using manufacturer's standard fasteners. Provide end closures and seal watertight with sealant. Provide for thermal expansion.
4. Downspouts: Join sections with 1-1/2-inch telescoping joints. Provide fasteners designed to hold downspouts securely 1 inch away from walls; locate fasteners at top and bottom and at approximately 60 inches o.c. in between.
5. Roof Curbs: Install curbs at locations indicated on Drawings. Install flashing around bases where they meet metal roof panels.
6. Pipe Flashing: Form flashing around pipe penetration and metal panels. Fasten and seal to metal panels as recommended by manufacturer.

3.4 FIELD QUALITY CONTROL

A. Erection Tolerances:
1. Installation Tolerances: Shim and align metal panel units within installed tolerance of 1/4 inch in 20 feet on slope and location lines as indicated and within 1/8-inch offset of adjoining faces and of alignment of matching profiles.

B. Manufacturer's Field Service: Engage a factory-authorized service representative to inspect completed metal panel installation, including accessories. Report results in writing.

C. Remove and replace applications of metal panels where inspections indicate that they do not comply with specified requirements.

D. Additional inspections, at Contractor's expense, will be performed to determine compliance of replaced or additional work with specified requirements.

3.5 CLEANING

A. Clean in accordance with Specification Section - PROJECT CLOSEOUT.

B. Remove temporary protective coverings and strippable films, if any, as metal panels are installed, unless otherwise indicated in manufacturer's written installation instructions. On completion of metal panel installation, clean finished surfaces as recommended by metal panel manufacturer. Maintain in a clean condition during construction.

3.6 SCHEDULES

A. Metal Panel Schedule:
1. Exterior Roof Flat Sloped:
   a. Style: Ribbed.
   b. Manufacturer: NCI (CENTRIA).
   c. Type: BR5-36.
   d. Gage: 22.
   e. Size: 1-1/2" deep x 36" coverage, 7.2" o.c. rib spacing.
   f. Finish: "Fluoropolymer" 3-coat system.
   g. Remarks: N/A.
2. Exterior Wall:
   a. Style: Ribbed.
   b. Manufacturer: NCI (CENTRIA).
   c. Type: Inverted Box Rib, IBR5-36, exposed fastener.
   d. Gage: 22.
   e. Size: 1-1/2" deep x 36" coverage, 7.2" o.c. rib spacing.
   f. Finish: "Fluoropolymer" 3-coat system, one side only.
   g. Remarks: N/A.

END OF SECTION

INTENTIONALLY LEFT BLANK

SECTION 075113 - BUILT-UP ROOFING
(Granulated SBS Modified Cap Sheet and Reflective Surfacing System)

PART 1 - GENERAL

1.1 SUMMARY

A. This Section includes the following:
1. Provide all material, labor, transportation, equipment and services necessary to completely install all cold process bituminous roofing materials, accessories and other related items necessary to complete the Project as indicated by the Contract Documents.

B. Related Sections: The following Sections contain requirements that relate to this Section:
1. ALL DIVISION 00 SPECIFICATION SECTIONS.
2. ALL DIVISION 01 SPECIFICATION SECTIONS.
3. 04 22 00 CONCRETE MASONRY UNITS
4. 05 30 00 METAL DECK
5. 06 10 00 ROUGH CARPENTRY
6. 07 21 00 INSULATION
7. 07 40 00 METAL PANELS
8. 07 60 00 SHEET METAL
9. 07 72 00 ROOF ACCESSORIES
10. ALL SPECIFICATION SECTIONS IN THE FACILITY SERVICES SUBGROUP.

1.2 REFERENCES

A. Standards:
1. In accordance with the following standards:
a. FMG Factory Mutual for FMG wind uplift requirements.
b. NIST BSS #55, Building Series #55: Preliminary performance criteria of Bituminous Membrane Roofing, National Institute of Standards and Technology, Gaithersburg, MD.
c. NRCA National Roofing Contractor's Association (NRCA).
d. SMACNA Sheet Metal and Air Conditioning Contractors National Association, Vienna, VA.
e. UL Underwriter's Laboratory (UL) test certification labels or equivalent testing agency with same follow-up testing and certified label program must be displayed on related roof assembly materials.
f. UL 790 Underwriter's Laboratory, certified roof assembly to roof type identified on the drawings.

1.3 SYSTEM DESCRIPTION

A. Performance Requirements:
1. Fire Rating: UL Class A.
2. Wind Uplift: FMG I-90.
3. Warrant complete system.

B. Typical wood deck roof system section for this project:
   1. Plywood deck.
   2. Vapor Barrier.
   3. Cover board, mechanically attached.
   4. Tapered Rigid Board crickets, mechanically attached.
   5. Two (2) base sheet plies.
   6. Cap Sheet.
   7. White Reflective Coating.
   8. Flashings and Flashing Accessories.
   9. CPSE Flashing at parapets higher than 48 inches.

C. The extent of cold process bituminous roofing system work is indicated by provisions of this section, and is defined to include roofing, insulation immediately under the roofing systems, elastomeric flashings, stripping, walkpads, and roofing accessories integrally related to roofing installation with all compatible with manufacturer's warranty requirements.

1.4 SUBMITTALS

A. Submit in accordance with Specification Section - SUBMITTAL PROCEDURES:
   1. Coordination Drawings:
      a. Submit installer's coordination drawings indicating the work of this section coordinates with that of related sections for proper interface of the completed work. Installer shall coordinate and obtain approvals of other related sections prior to submitting to the Architect.
   2. Product Data.
      a. Submit manufacturer's product data including performance requirements of all materials.
      b. Material Safety Data Sheets will not be reviewed, but if submitted will be turned over to the Owner in compliance with local rules and regulations.
   3. Shop Drawings.
      a. The Roofing Contractor, in concert with the Material Manufacturer, is to submit detailed drawings of all flashing and roofing system details compatible with the manufacturer's requirements for the roofing system warranties, required herein for review and approval.
   4. Quality Assurance/Control Submittals:
      a. Certificates:
         1) Submit three (3) copies of certification from a Corporate Officer of the Roofing Material Manufacturer stating that major roofing system components including insulation, flashing, coatings, cold process adhesives; roofing ply sheets; reinforcement fabrics, felts, walkpads, mastics, and sealants are compatible with all the other components of the roofing system and the warranties required herein, for single source liability.
         2) Submit three (3) copies of certification from Roofing Material Manufacturer that cold process coatings and adhesives are not "Red Label".
         3) Submit three (3) copies of certification from Underwriter's Laboratory (or approved equivalent prior to submittal) that the roofing systems meet or exceed listed performance requirements listed herein.

4) Submit three (3) copies of certification from an independent laboratory showing test results (utilizing the ASTM testing criteria listed herein) for all roofing materials and completed assemblies, indicating compliance with the performance requirements listed herein.

b. Manufacturer's Written Instructions:

1) Submit three (3) copies of certification from an independent laboratory showing test results (utilizing the ASTM testing criteria listed herein) for all roofing materials and completed assemblies, indicating compliance with the performance requirements listed herein.

c. Manufacturer's Field Reports:

1) Submit three (3) copies of manufacturer's field reports for each roofing system indicating the final status of the installed roofing systems, and compliance with the manufacturers warranty requirements.

5. Closeout Submittals in accordance with Specification Sections in Division One:

a. Project Record Documents in accordance with Specification Section - PROJECT RECORD DOCUMENTS.

b. Warranty in accordance with Specification Section - WARRANTIES.

1) Special warranties:

a) Five (5) Year Workmanship Warranty.

b) Ten (10) Year Major Manufacturer’s Roofing System Warranty.

1.5 QUALITY ASSURANCE

A. General Requirements:

1. The Roofing Contractor shall ensure that all products used in conjunction with the installation of the new roofing system(s) are totally free of asbestos. Products containing asbestos are prohibited on this project.
2. Deliver all roof system materials in original manufacturer labeled packages. All roofing products delivered to the site and used on this project will bear Class A Fire Rating Labels.
3. All adhesives and cements shall be compliant with current applicable VOC Requirements State and Local on the project. Contractor shall use products with personal protection when applicable. The Roofing Contractor shall insure that all product users read container labels and MSDS information prior to use.

B. Only those manufacturers who produce, label and warrant all major and/or primary components of the specified roofing system, can exhibit $10,000,000.00 product liability, or a $2,000,000.00 product liability policy with a $5,000,000.00 umbrella per event insurance coverage and comply with all other requirements of this Specification.

C. The products listed herein establish the size, weight, pattern, color range and function selected by the Architect for this Project. The intent is not to limit competition, but to utilize only those products which have been employed previously on projects of a similar nature and found acceptable.

D. Qualifications:

1. Material Qualifications:

a. Roofing Material Manufacturer shall:

1) Be nationally recognized in roofing and waterproofing industry and a member of NRCA for at least ten (10) years.

2) Provide local Field Representative to make periodic site visits, report work quality and job progress.
3) Provide list of at least five (5) projects available for inspection employing same system(s) within the last three years, within the same climate zone and 200 mile distance of project building(s).
4) Be approved by Owner and the Architect.
5) Provide Owner and the Architect proof/copy of material product liability insurance for all materials.
6) Provide Owner and the Architect certified independent laboratory test results for all roofing materials using ASTM test criteria as designated in Part 2 - Product section of this Specification indicating compliance with the performance criteria contained herein.
7) The presence and activity of the manufacturer's representative and/or Owner's representative shall in no way relieve the roofing contractor of his/her contractual liabilities/responsibilities.
8) Provide to the Owner names of at least three (3) qualified roofing applicators/installers.

2. Installer Qualifications:
   a. The Roofing Contractor shall be experienced and certified in writing by the Roofing Material Manufacturer to install manufacturer's products and systems in accordance with manufacturer's warranty requirements.
   b. The Roofing Contractor and his/her installers shall:
      1) The Roofing Contractor shall be experienced and certified in writing by the Roofing Material Manufacturer to install manufacturer's products and systems in accordance with manufacturer's warranty requirements.
      2) Be acceptable to the Owner, Architect and Roofing Material Manufacturer.
      3) Provide list of at least five (5) projects available for inspection employing specified system(s) within the last three years, within the same climate zone and within 200 miles distance of project building(s).
      4) Be responsible for obtaining all data required from Roofing Material Manufacturer.
      5) Obtain and provide all required data from Roofing Material Manufacturer.
         a) These specifications are based on minimum performance requirements of both the Roofing Contractor and Roofing Material Manufacturer.

E. Regulatory Requirements:
   1. In accordance with Specification Section - Regulatory Requirements, and the following:
      a. CARB Materials and equipment used for this Project shall comply with the current applicable regulations of the California Air Resources Board (CARB)and the Environmental Protection Agency (EPA), in the area where the project is located.
      b. CRRC Cool Roof Rating Council
      c. FMG Factory Mutual for wind uplift requirements.
      d. NIST BSS #55, Building Series #55: Preliminary performance criteria of Bituminous Membrane Roofing, National Institute of Standards and Technology, Gaithersburg, MD.
      e. NRCA National Roofing Contractor's Association (NRCA).
      f. SMACNA Sheet Metal and Air Conditioning Contractors National Association, Vienna, VA.

g. UL Underwriter's Laboratory (UL) test certification labels or equivalent testing agency with same follow-up testing and certified label program must be displayed on related roof assembly materials.
h. UL 790 Underwriter's Laboratory, certified roof assembly to roof type identified on the drawings.

F. Meetings:
1. Pre-installation: Scheduled by the Contractor prior to the start of work.
   a. Coordinate the work with all other related work.
   b. Identify any potential problems that may impede planned progress and proper installation of work regarding quality of installation and warranty requirements.
2. Progress Meetings: Scheduled by the Contractor during the performance of the work.
   a. Review for proper installation of work progress.
   b. Identify any installation problems and acceptable corrective measures.
   c. Identify any measures to maintain or regain project schedule of necessary.
3. Completion: Scheduled by the Contractor upon proper completion of the work.
   a. Inspect and identify any problems that may impede issuance of warranties or guaranties.
   b. Maintain installed work until the Notice of Substantial Completion has been executed.

1.6 DELIVERY, STORAGE, AND HANDLING

A. Packing, shipping, handling, and unloading:
1. Products shall be handled in such a manner as to assure that they are free from dents, scratches and other damage.
2. Handle materials to avoid bending, tearing, or other damage during transportation and installation.
3. Material handling equipment shall be selected and operated so as not to damage existing construction or applied roofing.
   a. Do not operate or situate material handling equipment in locations that will hinder smooth flow of vehicular or pedestrian traffic.

B. Acceptance at Site:
1. Coordinate delivery with Contractor.
2. Products delivered to the job-site must be in manufacturer's original, new, dry and unopened containers with labels indicating brand name, grade and ASTM number.
3. Deliver materials in sufficient quantity to allow continuity of work.
4. Damaged products will not be accepted.

C. Storage and protection:
1. Products shall be stored above ground on level platforms, six (6) inches above ground, allowing air circulation under stacked units.
   a. Cover materials with protective waterproof covering providing for adequate air circulation and ventilation.
   b. Store roll goods on ends only and protect from moisture contamination of any kind.
   c. Discard rolls and insulation which have flattened, creased, allowed to become damp/wet, or otherwise damaged.
   d. Place and store materials on pallets.
   e. Do not stack pallets.

2. Store materials marked "keep from freezing" in areas where temperatures will remain above 40 degrees Fahrenheit.
3. Neatly stack products on dunnage.
4. Remove breathable waterproof covering. Cover top and sides of all stored materials at interior and exterior storage areas with canvas tarpaulin or equivalent cover to allow the materials to "breathe".
   a. Secure cover.
   b. Do not use polyethylene to cover materials.
5. Rooftop Storage: Disperse material to avoid concentrated loading. Any damage to the structure resulting from non-conformance to this requirement will be the sole responsibility of the roofing contractor.
6. Materials necessary for two day's work may be stockpiled on roof under the provisions outlined in paragraph 5 above.
7. No materials may be stored in opening or in contact with ground or roof/deck surface.
8. The Roofing Contractor shall assume full responsibility for the protection and safekeeping of roofing materials and products stored on the job-site premises.

1.7 PROJECT CONDITIONS

A. Environmental requirements:
   1. Do not work in rain, snow, or in presence of moisture, including dew or fog.
   2. Do not work in temperatures at or below 40 deg. F.
   3. Do not install materials marked "keep from freezing" in areas where temperatures will remain below 40 deg. F.
   4. Remove any work exposed to freezing and replace with new.

B. Existing Conditions:
   1. Examine site and compare it with the drawings and specifications. Thoroughly investigate and verify conditions under which the work is to be performed. No allowance will be made for extra work resulting from negligence or failure to be acquainted with all available information concerning conditions necessary to estimate the difficulty or cost of the work. Conduct work so as not to interfere unnecessarily with adjacent roads, streets, drives and walks.
   2. Conduct work so as not to interfere unnecessarily with adjacent roads, streets, drives and walks.
   3. The Roofing Contractor shall have SOLE responsibility for accuracy of all measurements, estimates or material quantities and sizes, and site conditions that will affect work.

1.8 WARRANTY

A. Contractor's General Warranty:
   1. In accordance with Specification Section - WARRANTIES.

B. Manufacturer's Warranty:
   1. Roofing Contractor and Roofing Materials Manufacturer’s Guarantee:

a. Upon project completion and Roofing Material Manufacturer's acceptance of the completed roofing system, the roofing contractor shall deliver to the Owner a No Dollar Limit (NDL) Major Manufacturer's Roofing System Guarantee, covering labor and materials, and shall guarantee to repair or replace defective materials including labor and installation on a pro-rated basis.
   1) Warranty period Ten (10) Years - NDL.
   2) The Roofing Material Manufacturer shall provide re-inspection of roofing system, including all integral components, at two (2) year and five (5) year anniversaries, and provide the Owner written summary of roof system analysis.
      a) Provide housekeeping and preventative maintenance at the 2nd and 5th year site visits.
   3) Written guaranties or warranties will include all integral components of entire roofing assembly including: Insulation, roof membrane, flashings, termination details, metal components and surfacing materials.

C. Installers Warranty:
   1. Roofing Contractor’s Workmanship and Materials Warranty:
      a. Upon project completion and acceptance, the subcontractor shall issue Owner a warranty against defective workmanship and materials.
      b. The roofing contractor shall warranty to maintain the roof and flashing in a watertight condition for the period of years specified from the date of acceptance and shall be responsible for the repair of any failure that is the result of defects in materials and workmanship.
         1) Warranty Period Five (5) years.
      c. The roofing contractor shall obtain from the Roofing Material Manufacturer and the General Contractor a co-endorsement of the Warranty.

D. Written Guarantee and warranty will include entire roof assembly including: insulation, roof membrane, flashings and all termination details.

E. Reflective coating: Contractor to issue a 5-year manufacturer's product warranty.

1.9 MAINTENANCE

A. Maintenance Service:
   1. Continuing Maintenance Agreement: Provide a continuing maintenance proposal from Installer to Owner with terms, conditions, and obligations as set forth in, and in the same form as, “Draft of Roof Maintenance Agreement” at end of this Section, starting on the date established for Substantial Completion.

PART 2 - PRODUCTS

2.1 MATERIALS

2.2 Insulation Materials:
   1. Cover Board:

a. Fiberboard: Regular density, asphalt impregnated on two sides, in accordance with ASTM C 208 "Specification for Cellulosic Fiber Insulating Board".

2. Rigid Board:
   a. Isocyanurate Insulation Board: FS HH-1-1972/2(1), Type II, Class 1, isocyanurate with surface fiber/organic mat facers on both sides, conditioned "R" value of 5.70 per inch.
   b. Flame Spread and Smke Developed in accordance with ASTM E84 "Test method for Surface Burning Characteristics of Building Materials":
      1) Flame Spread Index: 25 - 60.
      2) Smoke Density Developed Index: 75 – 160 range.
3. Insulation Board Sizes:
   a. Rigid Board: 4' x 8' x thickness as indicated on the drawings (minimum thickness as required for a Class A Roof System), and as indicated on the drawings for roof slope.
      1) Cricket Board: 2' x 4' dimension minimum, tapered thicknesses, slope as indicated
   b. Cover Board: 4' x 8' x 1/2 inch minimum thickness (or as required for a Class A roof system).
4. Cant Strip:
   a. Fiberboard, in accordance with ASTM C 208 "Specification for Cellulosic Fiber Insulating Board". Length: Forty-eight (48) inches.
      1) Minimum thickness: Three (3) inches nominal, face 4 inches nominal.
5. Insulation adhesive:
   a. ASTM D 312 "Specification for Asphalt Used in Roofing", Type IV asphalt.

B. Vapor Retarders:
   1. RP Vapor Retarder (Reinforced-Polyethylene Vapor Retarders): 2 outer layers of polyethylene film laminated to an inner reinforcing layer consisting of either nylon cord or polyester scrim and weighing not less than 25 lb/1000 sq. ft., with maximum permeance rating of 0.0507 perm.

C. Mechanical Fasteners:
   1. Provide industry-standard, non-corrosive types of mechanical fasteners (i.e.: screws and plates, termination bars, drawbands) for cold process built-up roofing system work, tested by manufacturer for required pull-out strength where applicable and compatible with substrate type, roofing products used and warranties required. Size of fasteners and plates shall be as recommended by roofing manufacturer in accordance with manufacturer's warranty requirements.

D. Flashing Sheet and Wall Flashing: Polyester Reinforced SBS Modified Membrane.
   1. Where wall flashing height exceeds 48 inches in height, in lieu of specified modified membrane wall flashing, provide and install a fully adhered 45 mil reinforced CSPE (Hypalon) membrane that is fully approved, warranted, and in accordance with modified membrane manufacturer.

2.3 ROOFING MATERIALS

A. Roofing systems approved for use by the District:
   1. Malarkey Roofing Co. Spec # M3-EEB-C
   2. Tremco Powerply Standard Smooth / Powerply Standard FR (cap)

3. Garland Versiply 60 / Versiply Mineral FR (cap)

2.4 Note: Systems that would be substituted will list all requirements to meet this specification in its' current catalog. Information provided beyond the catalog will be deemed unreliable. This includes a list of system components and their equal physical properties. New or experimental products are not acceptable.

A. Roofing assembly (Type of deck and insulation are job specific):
1. Field of roof (**3-ply total** applied over roofing insulation)
   a. 1-ply SBS base sheet fully adhered, cold adhesive
   b. 1-ply SBS cap sheet fully adhered, cold adhesive
2. Base sheet:
   a. 25 lb. Minimum weight per square. Shall meet ASTM D 4601, Type II and be UL Listed.
   b. Thickness 50 mils minimum.
3. Surfacing cap sheet:
   a. 100lb. Minimum weight per square. Shall comply with ASTM 5147-91.
   b. Breaking strength shall be 80lbs. MD and 40 lbs. CMD. At room temperature.
   c. Granule adhesion: UL test 55B. Maximum loss of 0.5 grams.
4. Base & Wall flashing: (1) layer SBS base sheet and (1) layer SBS cap sheet.
5. Adhesive: Shall be SBS modified and shall comply with ASTM 3019-80 type III and current California VOC standards (250 grams/liter max).
6. Primer: Per ASTM D 41.
7. Walkpads: 1/2" thick 3'x4' recycled rubber by Malarkey #140 or approved equal
8. Accessories:
   a. **SBS modified mastics and sealants** as required by manufacturer.
   b. Caulking: Polyurethane - Vulkem 116 made by Mameco or Sonolast NP-1 made by Sonneborn.
9. Reinforced woven glass mesh **(asphalt saturated)**.

2.5 White Reflective Coating:

A. Coating system must be approved by the manufacturer for use with the roofing system.

B. Coating shall be Title 24 Compliant, and SRI shall be greater than 82 in accordance with HPI, CA-CHPS 2009, Credit SS 4.2.

C. Base Coat for Built-Up Roofing systems:
1. The elastomeric base coat shall be specially formulated with Rohm and Haas Lipacryl MB3640 bleed blocking resins and hydrophobic dispersants to provide for optimal ponding water and bleed through resistance.
   a. Solids by Volume 56%
   b. Solids by Weight 68%
   c. PVC 39%
   d. Viscosity (Kreb Units) 110
   e. Permeance (English @ 20 mils) 3
   f. Percent Swelling (1 week/4 weeks) 12/26
   g. Blister Resistance on Mod. Bit – 14 days Excellent
   h. Elongation 300%
   i. Tensile Strength 225

j. Dry Adhesion to APP Mod. Bit. .6 (lbs/inch)
k. Low Temperature Flexibility 1/8 mandrel @ 30 deg. F Pass

D. Top Coat for Built-Up Roofing systems:
1. The elastomeric top coat shall be specially formulated with Rohm and Haas Lipacryl MB3640 bleed blocking resins and hydrophobic dispersants to provide for optimal ponding water and bleed through resistance
a. Solids by Volume 56%
b. Solids by Weight 70%
c. PVC 42%
d. Viscosity (Kreb Units) 110
e. Permeance (English @ 20 mils) 3
f. Percent Swelling (1 week/4 weeks) 10/22
g. Blister Resistance on Mod. Bit – 14 days Excellent
h. Elongation 260%
i. Tensile Strength 280
j. Low Temperature Flexibility 1/8 mandrel @ 30 deg. F Pass

PART 3 - EXECUTION

3.1 EXAMINATION

A. Site verification of conditions:
1. Prior to the execution of the work under this specification section, inspect the installed work executed under other specification sections of this Project Manual which affect the execution of work under this specification section. Report unacceptable conditions to the Architect. Do not begin work until unacceptable conditions have been corrected.
2. Prior to installation of roofing, the Roofing Contractor shall inspect the new deck conditions and verify that the new roof system may be installed in strict accordance with original design, the manufacturer's current recommendations, and all other pertinent codes and regulations.
3. Report unacceptable conditions to the Architect. Do not begin work until unacceptable conditions have been corrected.
4. Execution of work under this specification section shall constitute acceptance of existing conditions.
5. Check projections, curbs, and deck for inadequate anchorage, foreign material, moisture, or unevenness that would prevent quality and execution of the new roofing system.

B. General quality of work:
1. Substrate Free of foreign particles prior to laying roof membrane.
2. Phased application:
a. Not permitted.
b. All plies shall be completed each day.

3.2 PREPARATION

A. Coordination:
1. Coordinate work under this specification section with work specified under other specification sections to ensure proper and adequate interface of work.

B. Protection:
1. Protect all adjacent surfaces from drips, spray, air pollution of surrounding environment, and other damage from work under this specification section.
2. Roofing Contractor shall be responsible for protection of property during course of work.
   a. Lawns, shrubbery, paved areas, and building shall be protected from damage.
   b. Repair damage at no extra cost to Owner.
3. Provide at site prior to commencing removal of debris, a dumpster or dump truck to be located adjacent to building where directed by General Contractor.
4. Roofing, flashing, membrane repairs, and insulation shall be installed and sealed in a watertight manner on same day of installation or before arrival of inclement weather.
5. At start of each work day drains within daily work area shall be plugged.
   a. Plugs to be removed at end of each work day.
6. Preparation work shall be limited to those areas that can be covered with installed roofing material on same day.
7. Arrange work sequence to avoid use of newly constructed roofing for storage, walking surface, and equipment movement.
8. At end of each working day, completed segment shall be sealed with water stops along edges to prevent water infiltration. Refer to INSTALLATION for specific instruction.
9. Provide clean plywood walkways and take other precautions required to prevent tracking of debris into new membrane area where debris pieces can be trapped within new roofing membrane.
   a. Contractor shall instruct and police his/her workers to ensure that debris is not tracked into or allowed to be wind driven into the new membrane.
   b. Discovery of entrapped debris or other foreign matter within new membrane is sufficient cause for rejection of the membrane.

3.3 INSTALLATION

A. General:
1. In accordance with manufacturer's written instructions and recommendations.
2. In accordance with approved submittals.
3. In accordance with Regulatory Requirements.
4. In accordance with FM Approvals Roof Nav assembly requirements.
5. In accordance with FM Global Property Loss Prevention Data Sheet 1-29.

B. Perimeter nailer strip: 6 inch wide exterior grade plywood, in lieu of cover board, thickness as required for flush finish, typically 1/2".
1. Attachment: fasteners at 6 inches on center.
2. Fasteners: Wood deck: 6d ring-shank nails. Metal deck: pan-head screws.

C. Insulation Installation:
1. General: All insulation will extend over horizontal surfaces, including parapet braces, until the insulation boards meet the vertical parapet wall surfaces.
   a. Flush all insulation board surfaces that meet adjacent surfaces to be free from any uneven or gapped joints, sharp edges or other irregularities.
2. Insulation:
   a. Mechanically attach single layer to deck.
   b. Stagger insulation joints on one-half pattern, typically 4 feet.
   c. Fasteners:

1) Fastener System: One (1) screw and metal disc. Seated firmly in discs with fastener heads flush or below disc's top surface. Sufficient to accommodate roof insulation thickness and penetrate plywood deck completely.
2) Fastener Density: 4 rows of 4 or 16 fasteners per 4 x 8 sheet of insulation board.
3) Additional fasteners as required to ensure insulation is firm under foot.
4) Drive mechanical fasteners flush to top surface.

3. Wood Deck:
   a. Loose lay RP Vapor Retarder and seal all laps.
   b. Mechanically attach single layer Cover Board insulation to deck.
   c. Fastener Density:
      1) Field 16 fasteners per every 4' x 8' board.
   d. Install additional fasteners to ensure insulation is firm under foot.
   e. Drive mechanical fasteners flush to top surface.
   f. Filler insulation requires two (2) fasteners per piece minimum.
4. Metal Deck:
   a. Loose lay RP Vapor Retarder and seal all laps.
   b. Mechanically attach bottom layer of Rigid Board thermal or roof slope insulation to the top plate over metal deck at low flute.
      1) Mechanical fasteners are not to be exposed from under deck.
      2) Fastener density: 16 fasteners per 4’ x 8’ board.
      3) Install additional fasteners to ensure insulation is firm under foot.
      4) Stagger joints at least six (6) inches.
      5) Drive mechanical fasteners flush to top surface.
      6) Filler insulation requires two (2) fasteners per piece minimum.
      7) Bottom layer shall form continuous insulation joints over deck flange.
         a) Do not cantilever insulation edges over deck ribs.
         b) Minimum bearing surface 1-1/2 inches.
   c. Adhere the second layer of Rigid Board thermal insulation to the first layer of Rigid Board thermal or roof slope insulation.
   d. Adhere Cover Board insulation to Rigid Board layer.

D. Flashing:
1. General Flashing Specifications:
   a. All other flashings not specifically detailed herein will be applied in accordance with manufacturer's written recommendations and approved by the Architect.
   b. All sheet metal that will come in contact with bituminous materials shall be primed with the specified asphaltic primer and allowed to dry before applying bitumen.
   c. The bottom edge of all flashing shall be three-coursed.

E. Wall Flashing:
1. SBS Modified Wall Flashing Installation:
   a. Roofing Contractor shall install base flashing at the base of all existing vertical wall and curb surfaces in the following manner:
      1) All flashing must be temporarily sealed at the end of each working day.
      2) Refer to manufacturers recommended installation procedures and the system performance requirement for proper installation of perimeter flashings.
      3) All Wall Flashings will receive a backer sheet utilizing the ply/base sheet.

4) Secure the top edge of the base using a galvanized metal termination bar. Fasten the termination bar to framed walls using screws at 8 inches on center.
5) The flashing sheet shall extend to the outside edge of all raised edge nailers.

2. CSPE Wall Flashing Installation:
   a. Roofing Contractor shall install base flashing at the base of all existing vertical wall and curb surfaces in the following manner:
      1) All flashing must be temporarily sealed at the end of each working day..
      2) Wall Flashing shall extend from the outside edge of the parapet wall cap, over the top, and down the inside face of the wall. Embed the CSPE flashing sheet in a continuous application of flashing adhesive per the manufacturer's current written recommendations. The flashing membrane shall be of sufficient length to extend from the outside edge of the parapet cap, over the top of the vertical flashing surface (and under the parapet sheet metal cap) to a minimum of 6 inches past the toe of the cant strip onto the roof.
      3) Wipe seams of the base flashing membrane with a manufacturer recommended solvent. Lap seams a minimum 4 inches and completely adhere with a heat welding application. Cross roll laps with 2 inch steel roller.
      4) Top edge of flashing membrane shall be stuck into caulking tape. Bottom edge of flashing membrane shall be three-coursed. Make sure flashing is installed without any looseness. Remove and replace any loose flashing.
      5) Secure the top edge of the base flashing over the area where the caulking tape is installed behind the CSPE base flashing membrane, using a galvanized metal termination bar. Fasten the termination bar to concrete walls using concrete screws turned into pre-drilled holes at 8 inches on center. Fasten the termination bar to plywood walls using screws at 8 inches on center.
      6) The flashing sheet shall extend to the outside edge of all raised edge nailers.

F. Roofing Contractor shall install roof drain flashings as follows:
   1. Drain rings shall be removed prior to built-up roofing application.
   2. A minimum 3 foot square lead flashing sheet shall be set into a solid coating of asphaltic mastic over the installed roofing plies. Install a two (2) ply stripping using specified base sheet. First ply shall be embedded in a asphaltic mastic and shall cover the lead completely and extend onto the field of the roof 6" in all directions. Second ply shall be embedded in cold process adhesive, fully covering the first stripping ply and extending past the first ply a minimum of 6" in all directions. All plies, including the lead flashing and field plies must extend into the drain and under the clamping ring.
   3. The drain ring shall be set into asphaltic mastic and immediately tightened. A guard screen shall be installed over all drains.
   4. After complete installation of the roofing system, Roofing Contractor shall inspect and test all roof drains to assure that no clogging of the drainage system is present. The roof drain leader should be in such condition that full diameter of the drain leader is clear.

G. Roofing Contractor shall tie onto all flanged metal components in the following manner:
   1. Prime all metal that is to come into contact with asphaltic compounds with specified primer.
   2. All flanges shall be set into asphaltic mastic over the finished roofing plies. Galvanized metal flanges will be fastened to the underlying wood nailers at three (3) inches on. center, staggered.

3. All flanges, including pipe flashing, edge flashing, flanged vents, flanged units, etc., will be flashed on the roof with two plies of trilaminate stripping ply sheet. Install a two (2) ply stripping using specified trilaminate base sheet. First ply shall be embedded in a asphaltic mastic and shall cover the lead completely and extend onto the field of the roof 6" in all directions. Second ply shall be embedded in cold process adhesive, fully covering the first stripping ply and extending past the first ply a minimum of 6" in all directions.

H. Contractor shall install all edge metal in the following manner:
   1. Set edge metal into layer of asphaltic mastic over finished field plies.
   2. Install metal cleats. Cleats shall be at least one gage heavier than the metal edge.
   3. Metal sections shall be a maximum of ten (10) feet in length. Leave a minimum of 1/2" space between metal sections. Install a minimum of 4" wide lap over and nail in place through 1/2" gap in metal sections. Nail metal edge 3" o.c. staggered.
   4. Install two plies of trilaminate stripping ply sheet to metal flange and roof surface. Apply five-coursing by installing a 12 inch trilaminate flashing ply embedded into and covered with cold-process adhesive over a 6 inch trilaminate flashing ply embedded into and covered with asphaltic mastic. Ensure asphaltic mastic is feathered smooth and 3/4 inch from inside outside metal edge.

I. Roofing system application:
   1. Install two (2) plies minimum, three (3) plies at valleys, of specified composite reinforced roofing felts over the cover board and the roof deck system, set into solid spray applications of cold-process asphalt in the following manner:
      a. Starting at the low point of the roof, apply one 18 inch side strip, and then over starter strip, apply a full 36 inch wide specified roofing felt. Following plies are to be applied full width, overlapping the preceding felt by 18 inches in such a manner that there be at least two (2) plies of interply felt at any point.
      b. Cut 12 to 18 foot lengths of specified felt, allow to relax thirty (30) minutes at 55 deg. F+ or sixty (60) minutes at 55 deg. F-. Flop shingle fashion into a full width application of cold-process asphalt applied at a rate of 2.0 gallons per 100 square feet. The specified felt must be firmly and uniformly set into the asphalt with all edges well sealed.
      c. Lightly broom and/or roll each ply of specified felt into place, full width, immediately after installation. Felts shall lay flat and be fully bonded in such a manner that in no area shall felt touch felt. Use only a squeegee or conduit type broom.
      d. Apply uniform and continuous pressure to exposed edge and end laps to ensure complete adhesion.
      e. Lap ply ends 6 inches. Stagger end laps 3 feet minimum.
      f. Header laps in roof field shall be at least 2 feet.
      g. Overlap previous day's work 18 inches.
      h. Cut out and patch all fishmouths and side laps which are not completely sealed. Replace all sheets which are not fully and continuously bonded.
      i. Roof surface will be rolled after each work day to smooth fishmouths.

J. Contractor shall adhere to the following guidelines:
   1. Roofing materials shall not be installed during inclement weather. Roofing materials shall not be applied when moisture in any form, such as dew, can be seen or felt on the surface to which those materials are to be applied.

2. Valleys and waterways shall receive an additional ply of fiberglass felt which shall be at least 36 inches wide. This ply shall be laid on top of the insulation prior to the application of the other plies and shall extend at least 18 inches up the inclines, out of the valleys.
3. Interply applications of cold-process asphalt shall be continuous and applied at a rate of 2.0 gallons per 100 square feet. Application methods shall insure that all plies are completely embedded in asphalt.
4. All exposed deck and insulation must be covered with the completed roof membrane system, at the end of each day's work. All roof terminations and openings shall be water sealed.
5. Staging of the roof membrane application or temporary membrane is not acceptable. Membrane shall be installed in final form, with the exception of the cap sheet, on a daily basis.
    a. If phased roofing occurs, following prior approval of the Architect, as a result of emergency conditions, install additional plies over phased areas so that a continuous three (3) ply system is installed.
6. Foot and wheeled traffic shall be kept off the newly installed membrane until asphalt has sufficiently cured to prevent displacement voids.
7. All membrane deficiencies such as voids, bridging, fishmouths, cuts, tears, etc., shall be repaired in an acceptable manner. Incorporate into such repairs as many plies as are affected by the deficiency.
8. Air void pockets, as determined by test samples, shall not exceed eight percent (8) per interply mopping for individual sample and average of all samples shall be not less than five percent (5) per interply adhesive. If corrective action is required, cut the roofing felts down to the void and cover with three plies of fiberglass felt set into cold-process asphalt applied at a nominal rate of 3 gallons per 100 square feet.

K. Asphalt Heating, for flashing and trim:
1. Heat asphalt to its equiviscous temperature, measured at the mop cart or mechanical spreader immediately before application.
2. Circulate asphalt during heating.
3. Do not raise asphalt temperature above equiviscous temperature range more than one hour before time of application.
4. Do not exceed asphalt manufacturer's recommended temperature limits during asphalt heating.
5. Do not heat asphalt within 25 deg F (14 deg C) of flash point.
6. Discard asphalt maintained at a temperature exceeding finished blowing temperature for more than four hours.
7. Apply hot roofing asphalt within plus or minus 25 deg F (14 deg C) of equiviscous temperature.

L. Walkpad Installation:
1. Install walkpad panels in a path 3 feet wide around all HVAC mechanical units requiring regular maintenance (coordinate with mechanical contractor for items requiring maintenance). Space between pads no greater than 6 inches, and no less than 4 inches
2. Adhere to roofing in a spot application of polyurethane mastic.
3. Install after white reflective coating application.

3.4 APPLICATION

A. Cap Sheet: Install lapped granulated cap sheet starting at low point of roofing system. Offset laps from laps of preceding ply sheets and align cap sheet without stretching. Lap in direction to shed water. Extend cap sheet over and terminate beyond cants.
   1. Embed cap sheet in a solid application of cold fluid-applied adhesive applied at rate required by roofing system manufacturer.

B. Apply White Reflective Coating over completed cap sheet and flashings in the following manner:
   1. Remove all dirt, dust, and other loose debris from the roof. Pressure wash, taking care to not dislodge mineral surface. Area to be coated must be a clean, sound, and dry surface.
   2. Installation guidelines: Follow all manufacturer recommendations. Application of coating must be done during periods of warm, dry weather. Acrylic elastomeric coatings are very slow curing and are easily washed off due to high relative humidity, temperatures below 50 degrees or any kind of precipitation before the coating is thoroughly dry.
   3. Roof preparation:
      a. Roof system needs to cure for a minimum of 45 days before application of white reflective coating.
      b. Thoroughly clean and power wash the roof. Before application of coating, the roof must be clean, sound, dry and free of any contaminating materials that would interfere with proper adhesion of the coating. Any existence of talc on the roof surface is not acceptable.
      c. Allow substrate to dry completely prior to application of the coating system.
   4. Application: Apply two coats of acrylic elastomeric coating as follows per manufacturer's recommendations:
      a. Coating must be power-mixed for 15-20 minutes if product has been in storage for more than 60 days.
      b. Base Coat: Apply base coat of Tint Base evenly over the entire roof at the rate of one and one-half (1 1/2) gallons per square, 12 mil DFT min. Use back-roll technique to ensure good adherence.
         1) Spray into all laps and seams so as not to leave voids.
      c. Base Coat Curing: allow to cure for 24 hours, minimum.
      d. Top Coat: Evenly apply an additional coat of white finish coat at the rate of one and one-half (1 1/2) gallons per square, 12 mil DFT min, using a crosshatch technique. Use back-roll technique to ensure good adherence.
      e. Mil thickness of coating system to be 24 mils.
   5. Inspections: Random slit samples will be taken to ensure coating thickness to be 12 mils after the first coating and 24 mils after the final coating.
   6. Coating Warranty: The coating shall be part of the warranted roof system.

3.5 REPAIR / RESTORATION

A. Repair of deficiencies:
   1. Installations of details noted as deficient during Final inspection must be repaired and corrected by the Roofing Contractor and made ready for re-inspection, within five (5) working days of notification.

3.6 FIELD QUALITY CONTROL

A. Inspection:
   1. Schedule inspections and notify the Architect, Owner’s Inspector and any other regulatory agencies of the time at least 48 hours prior to the inspection.

B. Manufacturer's field services:
   1. Provide the services of a factory-authorized service representative to supervise the field assembly of components and installation of products or systems and related connections specified within this section, with weekly reports of the results in writing to the Architect.

3.7 CLEANING

A. Clean in accordance with Specification Section – PROJECT CLOSEOUT.
   1. Clean any soiled surfaces at the end of each day, minimum.
   2. Finish shall be clean and ready for the application of any additional finishes.

3.8 PROTECTION

A. Protection from weather:
   1. Protect newly installed work from freezing for 24 hours after erection, installation or application.

B. Protection from traffic:
   1. Provide final protection and maintain conditions, in a manner acceptable to manufacturer and installer, which ensures the work of this section being without damage or deterioration until the time of Substantial Completion.

END OF SECTION

INTENTIONALLY LEFT BLANK

SECTION 076000– SHEET METAL

PART 1 - GENERAL

1.1 SUMMARY

A. This Section includes the following:
   1. Provide all material, labor, equipment and services necessary to completely install all Sheet Metal materials, accessories and other related items necessary to complete the Project as indicated by the Contract Documents.

B. Related Sections: The following Project Manual Sections contain requirements that relate to this section:
   1. ALL DIVISION 00 SPECIFICATION SECTIONS.
   2. ALL DIVISION 01 SPECIFICATION SECTIONS.
   3. 04 22 00 CONCRETE MASONRY UNITS
   4. 05 12 00 STEEL AND FABRICATIONS
   5. 05 30 00 METAL DECK
   6. 06 10 00 ROUGH CARPENTRY
   7. 06 41 23 MODULAR CASEWORK
   8. 07 21 00 INSULATION
   9. 07 31 13 SHINGLES
   10. 07 40 00 METAL PANELS
   11. 07 51 13 BUILT-UP ROOFING
   12. 07 72 00 ROOF ACCESSORIES
   13. 07 92 00 SEALANTS
   14. 08 11 00 METAL DOORS AND FRAMES
   15. 08 14 16 WOOD DOORS
   16. 09 24 00 CEMENT PLASTER
   17. 09 91 00 PAINTING
   18. 10 05 00 MISCELLANEOUS SPECIALTIES
   19. ALL SPECIFICATION SECTIONS IN THE FACILITY SERVICES SUBGROUP.
   20. ALL SPECIFICATION SECTIONS IN THE SITE AND INFRASTRUCTURE SUBGROUP.

1.2 REFERENCES

A. Standards:
   1. DOD Department of Defense
   2. LIA Lead Industries Association.
   3. NRCA National Roofing Contractors Association
   4. SMACNA Sheet Metal and Air Conditioning Contractors' National Association, 6th Edition, Architectural Sheet Metal Manual.
   5. SSPC The Society of Protective Coatings

1.3 SUBMITTALS

A. Submit in accordance with Specification Section - SUBMITTAL PROCEDURES:

1. Shop Drawings.
   a. Submit shop drawings showing fabrication and installation of the work of this section including plans, elevations, sections, details of components, and attachments to other units of work.
2. Closeout Submittals in accordance with Specification Sections in Division One:
   a. Warranty in accordance with Specification Section - WARRANTIES.

1.4 QUALITY ASSURANCE

A. Qualifications:
1. Material Qualifications:
   a. Work shall be in accordance with Standards and details set forth in latest edition of the SMACNA Manual and Specifications unless indicated otherwise.
   b. The roofing manufacturer and installer selected for this project will select the roof flashing material and detailing for all roof penetrations compatible with the roofing system used and the warranties required. The schedule for roofing penetrations at the end of this section and the details contained within the drawings are minimum standards required for this project.
2. Installer Qualifications:
   a. Engage an experienced Installer who has successfully completed three (3) projects of similar scope and size to that indicated for this Project.

B. Regulatory Requirements:
1. In accordance with Specification Section - REGULATORY REQUIREMENTS, and the following:
   a. CARB Materials and equipment used for this Project shall comply with the current applicable regulations of the California Air Resources Board (CARB) and the Environmental Protection Agency (EPA), in the area where the project is located.

1.5 PROJECT CONDITIONS

A. Existing Conditions:
1. Examine site and compare it with the drawings and specifications. Thoroughly investigate and verify conditions under which the work is to be performed. No allowance will be made for extra work resulting from negligence or failure to be acquainted with all available information concerning conditions necessary to estimate the difficulty or cost of the work.
2. Conduct work so as not to interfere unnecessarily with adjacent roads, streets, drives and walks.

1.6 WARRANTY

A. Contractor's General Warranty:
1. In accordance with Specification Section - WARRANTIES.

B. Manufacturer's Warranty:
1. In accordance with Specification Section - WARRANTIES.
   a. Warranty Period Five (5) Years.

C. Installer's Warranty:
   1. Workmanship and Materials Warranty:
      a. Warranty Period Five (5) years.
      b. Upon project completion and acceptance, the subcontractor shall issue Owner a warranty against defective workmanship and materials.
      c. The subcontractor shall warranty to maintain the roof flashing in a watertight condition for the period of years specified from the date of acceptance and shall be responsible for the repair of any failure that is the result of defects in materials and workmanship.
      d. The subcontractor shall obtain from the Roofing Installer and the General Contractor a co-endorsement of the Warranty.

PART 2 - PRODUCTS

2.1 MANUFACTURERS

A. These products listed herein establish the size, pattern, color range and function selected by the Architect for this Project. Manufacturers that are listed as acceptable alternative manufacturers and substitutions must still comply with the requirements of this project and the products listed in order to be approved as an equivalent during the Submittal Process. If the acceptable alternative manufacturers listed or substitutions are not approved during the Submittal Process due to non-compliance with the contract documents, then the Contractor shall submit product specified.
   1. Specified product manufacturer:
      a. Ice and Water Shield:
         1) GRACE CONSTRUCTION PRODUCTS
            a) CE and WATER SHIELD HT.
         2) Acceptable alternative manufacturers:
            a) CARLISLE COATINGS & WAQTERPROOFING - CCW WIP 400.
      b. Reglets:
         1) FRY REGLET CORPORATION.
      c. Primer Paint:
         1) ICI PAINT.
      d. Galvanized Repair Paint:
         1) RECTORSEAL.

B. Products from other manufacturers not listed must submit in accordance with Specification Section - SUBSTITUTION PROCEDURES.

2.2 MATERIALS

A. Sheet Metals:
   1. Steel Sheet:

a. Zinc-Coated, Commercial quality with 0.20 percent copper, ASTM A 653 "Specification for Steel Sheet, Zinc-Coated (Galvanized) or Zinc-Iron Alloy Coated (Galvanealed) by the Hot-Dip Process", G-90 hot-dip galvanized, mill phosphatized where indicated for painting; 0.0359 inch thick (20 gage) minimum, except as otherwise indicated.

2. Lead Sheet:
   a. ASTM B 749 "Specification for Lead and Lead Alloy Strip, Sheet, and Plate Products", Type L51121, copper-bearing sheet lead, minimum 4 lb/sq. ft. (0.0625 inch thick) minimum for burning (welding) unless otherwise indicated.
3. Aluminum Sheet:
   a. Provide sheet aluminum in accordance with ASTM B 209 "Specification for Aluminum and Aluminum-Alloy Sheet and Plate", alloy 3003, temper H14, AA-C22A41 clear anodized finish.
      1) Gage: 0.063 inches.
      2) Prepare anodized finish for application of primer and finish coats as indicated on the drawings.
4. Stainless-Steel Sheet:
   a. ASTM A 167 "Specification for Stainless and Heat-Resisting Chromium-Nickel Steel Plate, Sheet, and Strip", Type 304, soft annealed, with No. 4 finish, except where harder temper is required for forming or performance; minimum 0.0625 inch thick (16 gage), unless otherwise indicated.

2.3 MANUFACTURED UNITS

A. Reglets:
1. General: Units of type, material, and profile indicated, formed to provide secure interlocking of separate reglet and counterflashing pieces and compatible with flashing indicated.
2. Surface-Mounted Type: Provide with slotted holes for fastening to substrate, with neoprene or other suitable weatherproofing washers, and with channel for sealant at top edge.
3. Plaster Type: Provide with upturned fastening flange and extension leg of length to match thickness of applied finish materials.
4. Masonry Type: Provide with offset top flange for embedment in masonry mortar joint.
5. Flexible Flashing Retainer: Provide resilient plastic or rubber accessory to secure flexible flashing in reglet where clearance does not permit use of standard metal counterflashing or where Drawings show reglet without metal counterflashing.
6. Counterflashing Wind-Restraint Clips: Provide clips to be installed before counterflashing to prevent wind uplift of the counterflashing lower edge.
   a. Material: Galvanized steel, thickness matching material being installed, unless otherwise noted.

2.4 ACCESSORIES

A. Solder:
1. Solder for galvanized steel:
   a. ASTM B 32 "Specification for Solder Metal", Grade Sn50, used with rosin flux.
2. Solder for stainless steel:

a. ASTM B 32 "Specification for Solder Metal", Grade Sn60, used with an acid flux of type recommended by stainless-steel sheet manufacturer; use a noncorrosive rosin flux over tinned surfaces.

B. Stainless Steel Welding Rods:
1. Type recommended in writing by stainless-steel sheet manufacturer for type of metal sheets furnished

C. Fasteners:
1. Same material as sheet metal or other non-corrosive metal as recommended by sheet metal manufacturer, unless otherwise indicated on the drawings.
a. Match finish of exposed heads with material being fastened.

D. Electrolytic Insulation:
1. Asphalt Mastic:
a. SSPC-Paint 12, solvent-type asphalt mastic, nominally free of sulfur and containing no asbestos fibers, compounded for 15-mil (0.4-mm) dry film thickness per coat.
2. Other electrolytic insulation materials:
a. Asphalt impregnated felt, neoprene or EPDM rubber.

E. Sealants shall be in accordance with Specification Section - SEALANTS.
1. Mastic Sealant:
a. Polyisobutylene; nonhardening, nonskinning, nondrying, nonmigrating sealant.
2. Elastomeric Sealant:
a. Generic type recommended by sheet metal manufacturer and fabricator of components being sealed.
3. Epoxy seam sealer:
a. 2-part, noncorrosive, aluminum seam-cementing compound, recommended by aluminum manufacturer for exterior and interior nonmoving joints, including riveted joints.

F. Adhesives:
1. Type recommended by sheet metal manufacturer for waterproof and weather-resistant seaming and adhesive application of sheet metal.

G. Metal Accessories:
1. Provide sheet metal clips, straps, anchoring devices, screens, mesh, and similar accessory units as required for installation of work, matching or compatible with material being installed; noncorrosive; size and thickness matching material being installed.

H. Roofing Cement:
1. ASTM D 4586 “Specification for Asphalt Roofing Cement, Asbestos Free”, Type I.
a. Verify with roofing material utilized for this project as being compatible with materials and roofing manufacturer's warranty requirements.

I. Gutter Sealing System (when applicable):
1. Primer:
a. Suitable for metal gutter metal type and compatible with Coatings and Fabrics.
2. Base, Intermediate and Finish Layer Coating:
3. Base Layer Fabric:

a. Polyester Fabric compatible with primer and coatings.

2.5 FABRICATION

A. Sheet Metal Fabrication Standard: Fabricate sheet metal to comply with recommendations of SMACNA's "Architectural Sheet Metal Manual" that apply to the design, dimensions, metal, and other characteristics of the item indicated.

1. Comply with details shown to fabricate sheet metal that fit substrates and result in waterproof and weather-resistant performance once installed. Verify shapes and dimensions of surfaces to be covered before fabricating sheet metal.
2. Form exposed sheet metal work that is without excessive oil canning, buckling, and tool marks and that is true to line and levels indicated, with exposed edges folded back to form hems.
3. Seams:
   a. Fabricate nonmoving seams in sheet metal with "Drive Cleat" or "Lock" seams.
4. Expansion Provisions:
   a. Space movement joints at maximum of 10 feet (3 m) with no joints allowed within 24 inches of corner or intersection.
   b. Where lapped or bayonet-type expansion provisions in Work cannot be used or would not be sufficiently weatherproof and waterproof, form expansion joints of intermeshing hooked flanges, not less than 1 inch deep, filled with mastic sealant (concealed within joints).
   c. Gutter Expansion control and design, unless otherwise indicated on the drawings:
      1) Ends of a gutter shall occur no more than fifty (50) feet apart with at least one downspout in between, and gapped in accordance with Chapter 1, Table 1-7.
      2) Adjacent ends shall be telescoped or enclosed with covers in a manner to accommodate expansion as indicated in Chapter 1, Fig. 1-5 to 1-7 and 1-10.
5. Sealed Joints:
   a. Form nonexpansion, but movable, joints in metal to accommodate elastomeric sealant to comply with SMACNA standards.
6. Separate metal from noncompatible metal or corrosive substrates by coating concealed surfaces at locations of contact with asphalt mastic or other permanent separation as recommended by manufacturer.
7. Conceal fasteners and expansion provisions where possible.
   a. Exposed fasteners are not allowed on faces of sheet metal exposed to public view.
8. Fabricate cleats and attachment devices from same material as sheet metal component being anchored or from compatible, noncorrosive metal recommended by sheet metal manufacturer.
   a. Size: As recommended by SMACNA manual or sheet metal manufacturer for application but never less than thickness of metal being secured.

2.6 FINISHES

A. Shop Finishing:

1. All exterior galvanized sheet metal, unless specified otherwise, shall have all surfaces, except surfaces receiving roofing felt, properly cleaned and prepared and then painted with one coat Galvanized Metal Primer prior to installation.
   a. Galvanized Metal Primer: ICI 4020 "DEVGUARD", or approved equivalent.

b. Galvanized repair paint: High-Zinc-Dust-Content, in accordance with SSPC-Paint 20 or DOD-P-21035, with dry film containing a minimum of 94 percent zinc dust by weight paint for re-galvanizing welds and repair painting galvanized steel.

PART 3 - EXECUTION

3.1 EXAMINATION

A. Site verification of conditions:
1. Prior to the execution of the work under this specification section, inspect the installed work executed under other specification sections of this Project Manual which affect the execution of work under this specification section.
2. Report unacceptable conditions to the Architect. Do not begin work until unacceptable conditions have been corrected.
3. Execution of work under this specification section shall constitute acceptance of existing conditions.

3.2 PREPARATION

A. Coordination:
1. Coordinate work under this specification section with work specified under other sections to ensure proper and adequate interface of work.

B. Protection:
1. Protect all adjacent surfaces from drips, spray, air pollution of surrounding environment, and other damage from work under this specification section.

C. Surface preparation:
1. Prepare surface in accordance with manufacturer's written instructions and recommendations.
2. Clean substrates of substances (oil, grease, rolling compounds, incompatible primers, loose mill scale, etc.) which could impair bond of materials specified within this section.

3.3 INSTALLATION

A. General:
1. In accordance with manufacturer's written instructions and recommendations unless specifically noted otherwise.
2. In accordance with approved submittals.
3. In accordance with Regulatory Requirements.
4. Set plumb, level, and square.
5. Structurally reinforce and anchor work as required.
6. Work shall be weather and water tight as required.
7. Where dissimilar metals come into surface contact, cover surface in contact with electrolytic insulation.
8. Immediately following installation, and prior to roofing application, the metal will be primed with a quick drying primer compatible with roofing system installed and in compliance with roofing manufacturer's warranty requirements.

B. Layout:
   1. Lines shall be straight and true.
   2. Field mitered joints shall be neat, true to line, and water tight.
   3. Fastening:
      a. In accordance with approved shop drawings.
   4. Sealants:
      a. Seal all joints with sealant.

C. Assistance:
   1. Installation shall be in direct consultation and review of roofing system manufacturer where applicable.

3.4 CLEANING

A. Clean in accordance with Specification Section - PROJECT CLOSEOUT.
   1. Clean any soiled surfaces immediately.
   2. Finish shall be clean and ready for the application of any additional finishes.

3.5 SCHEDULES

A. The Schedules are divided into "Architectural" Sheet Metal Items and "Utility" Sheet Metal Items:
   1. Architectural Sheet Metal Items: Those items visible from the interior occupied spaces and from all exterior viewing positions. Fabrication of all Architectural Items shall provide a fully finished appearance on all visible surfaces. Fabrication shall be soldered or welded joints and ground smooth. Solid flat head riveted joints may be used if necessary, but limited in use and must be indicated on the shop drawings by the fabricator, and accepted by the Architect. The use of sheet metal screws, pop rivets, or bolts are not be permitted. All joints between section shall be uniformly gapped with a maximum of 1/16" and splice backing shall be centered on the joint.
   2. Utility Sheet Metal Items: Those items not visible from the interior occupied spaces nor from exterior viewing positions. Fabrication of all Utility Items shall be in accordance with SMACNA Standards and shop practices.

B. Sheet Metal Schedules should be used as a guide only and it is not considered as a complete list. Refer to Drawings for locations of all conditions requiring sheet metal items.

C. Multiple types of material are specified for various items in the Schedules. Verify with roofing manufacturer as to which material shall be used to be compatible to the roofing material provided and to satisfy roofing warranty requirements.

D. Materials gages specified for Items in the Schedules are minimum and shall be provided unless otherwise noted on the Drawings.

E. Schedules' Remarks / SMACNA No., 6th Edition, and are references of the standards for fabrication. Refer to Drawings for configurations and other fabrication requirements of sheet metal items.

F. Architectural Sheet Metal Items

"ARCHITECTURAL" SHEET METAL ITEMS					
ITEM	**LOCATION**	**MAT.**	**GA.**	**FINISH**	**REMARKS / SMACNA NO., 6th Edition**
Parapet Cap	Parapet Walls	Steel	20	Shop	Chapter 3, similar to Fig. 3-4A or Fig. 3-4G with E-1 and E-4 edge styles, as indicated on drawings. Provide J9 "Drive Cleat" joints, typical.
Cap Coping	Parapet Walls	Steel	20	Shop	Chapter 3, similar to Fig. 3-4G with E-4 edge style, as indicated on drawings. Provide J9 "Drive Cleat" joints, typical.
Drip Flashing	Various Conditions	Steel	22	Shop	Chapter 4, minimum 4" under finish and minimum 4" cover. Provide J2 "Butt & Backup Plate" joints with 1/16" gap. Fabricate Transition pieces and End Caps.
Counter Flashing	Various Conditions	Steel	22	Shop	Chapter 4, minimum 4" under finish and minimum 4" cover with 3/4" hemmed drip. Provide J2 "Butt & Backup Plate" joints with 1/16" gap. Fabricate Transition pieces and End Caps.
Opening Heads, Jambs & Sill Flashing	Metal Frames	Steel	22	Shop	Weld and Grind smooth all joints
Opening Heads, Jambs & Sill Flashing	Aluminum Windows	Alum	0.0253	Match Aluminum Window Finish.	Seal all joints.
Opening Heads, Jambs & Sill Flashing	Storefront	Alum	0.0253	Match Storefront Finish.	Seal all joints.
Opening Heads, Jambs & Sill Flashing	Curtain Wall	Alum	0.0253	Match Curtain Wall Finish.	Seal all joints.
Wall Penetration Flashing	Exterior Wall	Steel	22	Shop	Similar to Chapter 6, Figures 6-36, 37, 38 & 39.
Scuppers	Parapet Wall	Steel	22	Shop	Chapter 1, similar to Fig. 1-26A-B or 1-30A-B.
Gutters	Exterior	Steel	18	Shop	Chapter 1, Fig. 1-1. Provide expansion joints similar to Fig. 1-7. Solder overflow and downspout outlets.
Conductor Head	Exterior	Steel	18	Shop	Chapter 1, similar to Fig. 1-25. Solder downspout outlet.
Down	Exterior	Steel	18	Shop	Chapter 1, similar to Fig. 1-31, 1-32A or

"ARCHITECTURAL" SHEET METAL ITEMS					
ITEM	**LOCATION**	**MAT.**	**GA.**	**FINISH**	**REMARKS / SMACNA NO., 6th Edition**
Spouts					B. Provide Fig. 1-35B or J hangers.
Fascia Panels	Exterior	Steel	18	Shop	Weld and grind smooth all joints.
Color Band Panels	Exterior	Steel	18	Shop	Weld and grind smooth all joints.
Serving Counter	Serving Counter	S.S.	16	#4	Weld and Grind smooth all joints
Work Counter	Work Counter	Steel	16	Shop	Weld and Grind smooth all joints
Fabricated Tilt Mirror	Student Restrooms	S.S.	16	#4	Weld and grind smooth all joints.

G. Utility Sheet Metal Items

"UTILITY" SHEET METAL ITEMS					
ITEM	**LOCATION**	**MAT.**	**GA.**	**FINISH**	**REMARKS / SMACNA NO. , 6th Edition**
Clips & Cleats	Various Conditions	Steel	22	Shop	
Parapet Boot Flashing	Parapet Cap & Cap Coping	Steel	18	Shop	Solder all joints. Minimum 4" under finish and min. 4" cover.
Counter Flashing	Various Conditions	Steel	22	Shop	Minimum 4" under finish and min. 4" cover with ¾" hemmed drip. Provide J2 "Butt & Backup Plate" joints with 1/16" gap. Fabricate Transition pieces and End Caps.
Reglet & Counter Flashing	Plaster Parapets	Steel	24	Shop	FRY Spring Lock Type "ST" with "Spring-Loc" Flashing. Preformed transition pieces and end caps.
Reglet & Counter Flashing	Plaster Parapets	Steel	24	Shop	FRY Spring Lock Type "STX" with "Spring-Loc" Flashing. Preformed transition pieces and end caps.
Reglet & Counter Flashing	Masonry Parapet	Steel	24	Shop	FRY Spring Lock Type "MA" with "Spring-Loc" Flashing. Preformed transition pieces and end caps.
Reglet & Counter Flashing	Masonry Parapet	Steel	24	Shop	FRY Spring Lock Type "SM" with "Spring-Loc" Flashing. Preformed transition pieces and end caps.
Structural Support Flashing	Roof Penetration	Steel	18	Shop	Chapter 4, Similar to Figures 16A or B or C if welded or soldered, and grind smooth.
Vent Pipe Flashing	Roof Penetration	Lead or Steel	4#/sf or 22	Shop	Chapter 4, Fig. 4-15B.

"UTILITY" SHEET METAL ITEMS					
ITEM	**LOCATION**	**MAT.**	**GA.**	**FINISH**	**REMARKS / SMACNA NO. , 6th Edition**
Pipe or Conduit Flashing	Roof Penetration	Lead or Steel	4#/sf or 22	Shop	Chapter 4, similar to Figure 4-15C.
Multiple Pipe or Conduit Flashing	Roof Penetration	Lead or Steel	4#/sf or 22	Shop Or Shop	Chapter 4, similar to Figure 4-15A or 4-15B.
Insulated Pipe Flashing	Roof Penetration	Lead or Steel	4#/sf or 22	Shop	Chapter 4, Similar to Fig. 4-15C. Refer to Plumbing.
Mechanical Flue Pipe Flashing	Roof Penetration	Lead or Steel	4#/sf or 22	Shop	Chapter 4, Similar to Fig. 4-15C. Refer to Plumbing.
Manufactured Curb Flashing	Roof Penetration	Steel.	22	Shop	Provide formed metal corners lapped 6” with sheet metal screws with neoprene washers at 18” o.c.
Hatch Flashing	Roof Penetration	Steel.	22	Shop	Provide formed metal corners lapped 6” with sheet metal screws with neoprene washers at 18” o.c.
Ventilating Units Flashing	Roof Penetration	Steel.	22	Shop	Provide formed metal corners lapped 6” with sheet metal screws with neoprene washers at 18” o.c.
Scuppers	Parapet Screens	Steel.	22	Shop	Chapter 1, similar to Fig. 1-26A-B or 1-30A-B.
Roof Splash Pans	Roof	Steel.	22	Shop	Chapter 1, Fig. 1-36, 2-rib corrugation section..
Valley Flashing	Metal Panel Roof	Steel.	22	Shop	Chapter 6, Similar to Fig. 6-6 or Fig. 1-21 or Fig. 1-23, Detail 10, or Fig. 6-9, Detail 7 and Chapter 4, Fig. 4-10.
Built-in Gutter	Metal Panel Roof	S.S.	16	Shop	Chapter 1, similar to Fig. 1-4 or Fig. 1-21 or Fig. 1-23. Provide expansion joint similar to Fig. 1-8. Weld and grind smooth all joints.
Louver Screens	Louvered Openings	Steel.	14	Shop	Chapter 7, Fig. 7-7A or B. Provide 12 gage (0.105) 3 x 3 welded wire mesh.
Plumbing Sheet Metal	Various Plumbing Conditions	Steel.	22	Shop	Refer to Plumbing Drawings and Specifications.
Mechanical Sheet Metal	Various Mechanical Conditions	Steel.	22	Shop	Refer to Mechanical Drawings and Specifications.
Electrical Sheet Metal	Various Electrical Conditions	Steel.	22	Shop	Refer to Electrical Drawings and Specifications.
Roof and Overflow Drain	Roof	Lead	#4	Shop	See Details.

"UTILITY" SHEET METAL ITEMS					
ITEM	**LOCATION**	**MAT.**	**GA.**	**FINISH**	**REMARKS / SMACNA NO. , 6th Edition**
Pans					
Mechanical, Large Flue Flashing	Roof Penetration	Steel	22	Shop	Chapter 4, Detail 4-14A.

END OF SECTION

SECTION 077200 – ROOF ACCESSORIES

PART 1 - GENERAL

1.1 SUMMARY

A. This Section includes the following:
   1. Provide all material, labor, equipment and services necessary to completely install all roof accessory materials, accessories and other related items necessary to complete the Project as indicated by the Contract Documents.

B. Related Sections: The following Project Manual Sections contain requirements that relate to this section:
   1. ALL DIVISION 00 SPECIFICATION SECTIONS.
   2. ALL DIVISION 01 SPECIFICATION SECTIONS.
   3. 05 12 00 STEEL AND FABRICATIONS
   4. 05 30 00 METAL DECK
   5. 06 10 00 ROUGH CARPENTRY
   6. 07 31 13 SHINGLES
   7. 07 40 00 METAL PANELS
   8. 07 51 13 BUILT-UP ROOFING
   9. 07 60 00 SHEET METAL
   10. 07 92 00 SEALANTS
   11. 09 91 00 PAINTING
   12. ALL SPECIFICATION SECTIONS IN THE FACILITY SERVICES SUBGROUP.
   13. ALL SPECIFICATION SECTIONS IN THE SITE AND INFRASTRUCTURE SUBGROUP.

1.2 REFERENCES

A. Standards:
   1. In accordance with the following standards:
      a. ASTM American Society for Testing and Materials
      b. LIA Lead Industries Association.
      c. NRCA National Roofing Contractors Association (If the roofing system scheduled to be installed calls for related sheet metal flashing to be in accordance with NRCA detailing in order to satisfy their warranty requirements, then the NRCA detailing shall govern in lieu of SMACNA standards.)
      d. OSHA Occupational Safety and Health Administration
      e. SMACNA Sheet Metal and Air Conditioning Contractors' National Association, latest Edition, Architectural Sheet Metal Manual.

1.3 SYSTEM DESCRIPTION

A. (Manufactured Curbs Only) This section specifies curbs for mechanical and electrical equipment specified in Division 23 and Division 26, as well as architectural curbs in Division 05, Division 07 and Division 08. These curbs are designed and fabricated as welded single piece units that are structurally designed by the manufacturer to span structural framing. The curbs require structural calculations from the manufacturer in accordance with the CBC for the mechanical or electrical units supplied that are mounted on top of the curbs.

1. Manufactured curbs shall be designed, engineered, and fabricated for exact mechanical units selected after bid, and can be designed for compound slopes and difficult roofing conditions. Designs shall accommodate each type of roofing condition.
2. All curbs shall be designed to be a minimum of 8-inches above the finished roof at the top most portion of the curb, and designed with crickets for watertight connections.
3. Construct curbs to match roof slopes with plumb and level top surfaces for mounting mechanical or electrical equipment.

1.4 SUBMITTALS

A. Submit in accordance with Specification Section - SUBMITTAL PROCEDURES:

1. Coordination Drawings (Manufactured Curbs only):
   a. Manufacturer(s) shall coordinate with the Contractor and the Roofing Subcontractor all applicable work placed on or penetrating the roof deck and roof membrane system for the proper selection of Roof Accessories for this project. Manufacturer shall coordinate with the Contractor all weights and dimensions from approved shop drawings of mechanical equipment and piping/conduit required for this project and fabricate accordingly. All items coordinated (including Structural Calculations) shall be presented within the shop drawings for the Architect's and Strucural Engineer of Record's review.
2. Product Data.
   a. Include construction details, material descriptions, fabrication methods, dimensions of individual components and profiles, hardware, finishes, and operating instructions.
   b. Submit manufacturer’s standard color range for selection by the Architect.
3. Shop Drawings.
   a. Submit shop drawings prepared by, or under the supervision of a registered Civil or Structural Engineer in the State of California, detailing fabrication and assembly of the work under this section, as well as procedures and diagrams. Include setting drawings, templates, and directions for installation of anchor bolts and other anchorage to be installed as unit of work of other related sections.
      1) Manufactured Curbs must be coordinated with the Structural Shop Drawings and Mechanical / Electrical Equipment supplied as to size and weights for any roof top installation.
4. Quality Assurance/Control Submittals:
   a. Manufacturer's Written Instructions:
      1) Manufacturer's written instructions.
5. Closeout Submittals in accordance with the following:
   a. Maintenance Data in accordance with Specification Section - PROJECT CLOSEOUT.
   b. Operation Data in accordance with Specification Section - PROJECT CLOSEOUT.

c. Record Documents in accordance with Specification Section - RECORD DOCUMENTS.
d. Warranty in accordance with Specification Section - WARRANTIES.

1.5 QUALITY ASSURANCE

A. Qualifications:
1. Installer Qualifications:
a. Engage an experienced Installer who has successfully completed three (3) projects of similar scope and size to that indicated for this Project.
2. Manufacturer/Supplier Qualifications:
a. Firm experienced in successfully producing/supplying products similar to that indicated for this Project, with sufficient production/supply capacity to produce/supply required units without causing delay in the work.

B. Regulatory Requirements:
1. In accordance with Specification Section - REGULATORY REQUIREMENTS, and the following:
a. CARB Materials and equipment used for this Project shall comply with the current applicable regulations of the California Air Resources Board (CARB) and the Environmental Protection Agency (EPA), in the area where the project is located.

1.6 DELIVERY, STORAGE, AND HANDLING

A. Packing, shipping, handling, and unloading:
1. Products shall be individually wrapped.
2. Products shall be handled in such a manner as to assure that they are free from dents, scratches and other damage.

B. Acceptance at Site:
1. Products must be in manufacturer's original unopened containers with labels indicating brand name, model, and grade.
2. Damaged products will not be accepted.

C. Storage and protection:
1. Products shall be stored above ground on level platforms, six (6) inches above ground, allowing air circulation under stacked units.
a. Cover materials with protective waterproof covering providing for adequate air circulation and ventilation.

1.7 WARRANTY

A. Contractor's General Warranty:
1. In accordance with Specification Section - WARRANTIES.

B. Manufacturer's Warranty:
1. Hatch Railing System shall provide a warranty against defects in material and workmanship:

a. Warranty Period Twenty-Five (25) Years.
1) From the Date of Substantial Completion.

C. Installer's Warranty:
1. Weather Tightness Warranty for Roof Accessories: Manufacture's Standard form in which manufacturer agrees to repair or replace Roof Accessory assemblies that fail to remain weathertight, including leaks within specified warranty period. Warranty shall guarantee manufactured Roof Accessories to be free from defects in materials or workmanship.
a. Warranty Period Five (5) Years.
1) From the Date of Substantial Completion.

PART 2 - PRODUCTS

2.1 MANUFACTURERS

A. These products listed herein establish the size, pattern, color range and function selected by the Architect for this Project. Manufacturers that are listed as acceptable alternative manufacturers and substitutions must still comply with the requirements of this project and the products listed in order to be approved as an equivalent during the Submittal Process. If the acceptable alternative manufacturers listed or substitutions are not approved during the Submittal Process due to non-compliance with the contract documents, then the Contractor shall submit product specified.
1. Specified Manufactured Curb product manufacturer, or approved equivalent:
a. ROOF PRODUCTS, INC., RP Series to match specified products.
b. Acceptable alternative manufacturers:
1) ROOF PRODUCTS & SYSTEMS CORP.
2. Specified Roof Hatch product manufacturer, or approved equivalent:
a. BILCO COMPANY, S-20 Series.
b. Acceptable alternative manufacturers:
1) BABCOCK-DAVIS HATCHWAYS, INC.
c. Single Leaf Model to match specified products.
1) DUR-RED PRODUCTS, Ladder Hatch Model to match specified products.
2) NYSTROM , Single Leaf Model to match specified products.
3. Specified Smoke Vent product manufacturer, or approved equivalent:
a. BILCO COMPANY. DSH Series.
b. Acceptable alternative manufacturers:
1) BABCOCK-DAVIS HATCHWAYS, INC: Double Leaf UL/FM Smoke Vent to match specified products.
2) DUR-RED PRODUCTS: Double Door UL/FM Smoke Hatch to match specified products.
4. Specified Gravity Vent product manufacturer, or approved equivalent:
a. BRISTOLITE SKYLIGHTS Model #2222 GV-CM Series.
5. Specified Hatch Railing System manufacturer, or approved equivalent:
6. BILCO COMPANY "Bil-Guard".

B. Products from other manufacturers not listed must submit in accordance with Specification Section - SUBSTITUTION PROCEDURES.

2.2 MANUFACTURED UNITS

A. Manufactured Curbs:
1. General:
a. Curbs shall be constructed to match roof slope of roof and provide a level top surface for mounting of mechanical equipment.
1) Minimum height of all curbs shall be 8 inches above finished roof per NRCA requirements.
b. Provide ROOF PRODUCTS, INC., Model Numbers as follows:
1) RPC Series for Built-up Roofs.
2) RPMB Series for Metal Roofs.
3) RPES Series for Equipment Supports.
2. Equipment Curbs: Provide ROOF PRODUCTS, INC., Model Numbers as follows:
a. RPC-5 for Built-up roofs.
b. RPMB-5 for Metal Roofs.
c. Factory installed pressure treated wood nailers.
d. Welded 18 gage minimum galvanized steel shell and base plate, as applicable to roof equipment situation, with continuous mitered and welded corner seams.
e. 3 lb. density rigid fiberglass insulation board.
f. Internal angle reinforcing (1" x 1" x 12 gage) on sides greater than 36 inches in length, spaced 24 inches o.c.
g. All welds to be coated with manufacturer's "Alumanation 100".
h. Internal curb duct supports as required for the type of Mechanical units selected for the project.
3. Equipment Platform: Provide ROOF PRODUCTS, INC., Model Numbers as follows:
a. RPPF-5 for Built-up Roofs.
b. RPMB-5 for Metal Roofs.
c. Factory installed pressure treated wood nailers.
d. Welded 18 gage minimum galvanized steel shell and base plate, as applicable to roof equipment situation, with continuous mitered and welded corner seams.
e. 3 lb. density rigid fiberglass insulation board.
f. Internal angle reinforcing (1" x 1" x 12 gage) on sides greater than 36 inches in length, spaced 24 inches o.c.
g. All welds to be coated with manufacturer's "Alumanation 100".
h. Internal curb duct supports as required for the type of Mechanical units selected for the project.
i. Platform Cover:
1) Welded 18 gage galvanized steel construction.
2) Cover cross broken for positive water run-off.
3) Flared drip edge.
4) Flat Lock and Soldered seams on covers 43 inches x 105 inches and larger.
j. Platform: Provide 1-1/8" thick fire-retardant treated T & G plywood top sheathing
k. Vapor Retarder: Two layers of 15lb building paper between plywood platform and curb cover.
4. Equipment Supports: Provide ROOF PRODUCTS, INC., Model Numbers as follows:
a. RPES-3 for Built-up Roofs.
b. 18 gage minimum galvanized steel shell, base plate and counterflashing.
c. Factory installed pressure treated wood nailer.
d. Internal bulkhead re-enforcement.

e. All welded construction.
f. Vapor Retarder: Two layers of 15lb building paper between wood nailer and counterflashing.

5. Accessories:
   a. Square to Round adapter as indicated on the drawings:
      1) Cross broken for positive run-off.
      2) Type WG 16 gage galvanized steel construction.
      3) Watertight construction.
      4) Insulated to prevent condensation.
   b. "Dectite" size and number applicable to the size of pipes penetrating the roof deck indicated in the Contract Documents.
   c. Fasteners as required by the manufacturer for the proper installation of the roof curbs and weather resistant coating as standard with the manufacturer.
   d. Neoprene strips, sheets or washers as required by the manufacturer for weathertight construction.
   e. Provide Isolation Rails as required by Mechanical in DIV. 23 or Electrical in DIV. 26.

B. Roof Hatches:
1. BILCO COMPANY Model Type S-20, 30 inch x 36 inch.
2. Cover:
   a. Material: 14 gage galvanized steel.
   b. Insulation: 1 inch fiberglass.
   c. Liner: 22 gage galvanized steel.
   d. Flange: 3 inch beaded.
3. Curb:
   a. Material: 18 gage galvanized steel.
   b. Insulation: 1 inch thick fiberboard.
      1) Provide continuous 1 inch thick by 3 inch pressure treated wood nailer for termination of roofing materials at top of curb. Fasten to top of curb from inside of curb with #10 self tapping screws at 12 inches o.c. maximum. Wire brush off any burrs from screw head on inside of curb after attaching nailers.
   c. Height: 12 inches.
   d. Cap Flashing: 14 gage galvanized steel with full welded, mitered corner of watertight construction.
4. Hardware:
   a. Hardware Materials:
      1) Material: Cadmium plated steel.
      2) Hinges: Heavy Pintle.
      3) Operators: Compression springs enclosed in telescopic tubes.
      4) Latch: Positive snap with turn handles and padlock hasps inside and outside.
      5) Cover Seal: Neoprene, all sides.
      6) Hold-open Arms: Automatic with handle for one hand release.
5. Accessories:
   a. "LadderUP® Safety Post", as manufactured by BILCO, Model LU-2, hot dip galvanized finish, suitable for mounting on rear of ladder to top two rungs with clamp brackets, including all fasteners required.

1) If hollow rungs are encountered, provide solid bars of equal length as hollow rungs of diameter suitable for insertion into hollow rungs to prevent crushing of the rungs due to clamping of the Safety Post.
2) All materials for Safety Post shall be in compliance with ASTM A 36, "Standard Specification for Structural Steel".
3) Safety post shall comply with all OSHA and Cal OSHA safety guidelines for this work.
4) Safety Post shall be mounted so as not to interfere with the proper operation of any roof hatch covers.
5) Post shall be manufactured of high strength galvanized steel square tubing. A pull up loop shall be provided at the upper end of the post to facilitate raising the post.
6) Performance Characteristics:
   a) Tubular Post shall lock automatically when fully extended.
   b) Safety Post shall have controlled upward and downward movement.
   c) Release lever shall disengage the post to allow it to be returned to its lowered position.
   d) Post shall have adjustable mounting brackets to fit ladder rung spacing up to 14" on center and clamp brackets to accommodate ladder rungs up to 1-3/4" in diameter.
7) Balancing Spring: Provide a stainless steel spring balancing mechanism to provide smooth, easy, controlled operation when raising and lowering the safety post.
8) Hardware: Spring nuts shall be galvanized steel, and all other mounting hardware shall be Type 316 stainless steel.

6. Finish:
   a. Cover, curb and hardware shall be cleaned and chemically treated for maximum adhesion in preparation for manufacturer's standard primer paint.

C. Smoke Vents:
1. BILCO COMPANY Double Leaf Fire Vent, UL/FM approved, double wall curb construction with insulation, Type "DSH", 4 feet by 8 feet.
2. Cover Materials:
   a. Material: 14 gage galvanized steel.
   b. Insulation: 1 inch thick rigid fiberglass insulation.
   c. Liner Material: 22 gage galvanized steel.
   d. Flange: 3 inch.
3. Curb Materials:
   a. Material: 14 gage galvanized steel.
   b. Insulation: 1 inch thick rigid fiberboard insulation.
      1) Provide continuous 1 inch thick by 3 inch fire retardant treated wood nailer for termination of roofing materials at top of curb. Fasten to top of curb from inside of curb with #10 self tapping screws at 12 inches o.c. maximum. Wire brush off any burrs from screw head on inside of curb after attaching nailers.
   c. Height: 12 inch height on hinge sides minimum.
   d. Flange: 3-1/2 inches.
   e. Cap Flashing - 14 gage galvanized steel with full welded, mitered corners of watertight construction.
4. Hardware Materials:
   a. Material: Zinc plated steel.

b. Hinges: Heavy pintle.
c. Operators: Heavy duty compression springs fully enclosed in telescopic tubes capable of opening against 10 pound per square foot live load.
d. Latch Release:
1) Manually operated from inside only.
2) To resist opening against 30 pounds per square foot uplift pressure.
3) Reset automatically upon closing cover.
e. Automatic Opener:
1) Activate with a re-settable electric actuator to release when the latch mechanism is energized by an electric signal from the smoke detection system. (Voltage shall match system voltage. See Division 26. Manufacturer offers 115VAC, 24VAC or 24VDC.) Verify with manufacturer whether a Fusible Link is needed with this system.
2) Automatic locking in open position. Reset switch shall unlock and close door when alarm has discontinued.
f. Shock Absorber: Heavy duty.
g. Cover Seal: Neoprene, all sides.
h. Test Rigging:
1) In accordance with California State Fire Marshal's requirements.
2) Operational from the floor at location indicated on the Drawings.
3) Cables, pulleys and wall mounted enclosed winch.
4) Test Rigging diagram subject to Architect's approval.
5) Doors of all smoke vents must be interconnected to open simultaneously.

5. Cover, curb, liner and hardware shall be bonderized and primed with red oxide primer.

D. Gravity Vents:
1. BRISTOLITE Gravity Skyvents shall be Model #2222 FBK-GV-CM-9 with 3.00 sq. ft. free area.
2. The opaque black fiberglass ventilator shall be installed on manufactured custom curb.
3. Manufacturer's standard bird screen shall be included.
4. Locations as indicated on the drawings.

E. Hatch Railing System (for all hatches or fire vents within ten (10) feet of the roof edge):
1. "Bil-Guard" Hatch Railing System:
a. System shall comply with the requirements of OSHA 29 CFR 1910.23 and shall meet OSHA strength requirements with a safety factor of two.
b. Posts and Rails are pultruded from a fire retardant, fiberglass-reinforced polymer (FRP).
1) FRP material shall have a molded-in, high visibility, safety yellow color and shall be treated with a UV inhibitor.
c. Mounting brackets shall be fabricated form 1/4" thick hot dip galvanzied steel.
d. Gate hinges and post guides shall be constructed of 6063-T5 aluminum and torsion rods shall be Type 302 stainless steel.
e. All fasteners shall be Type 316 stainless steel.
f. Rail Panels that completely surround the hatch (number is dependent upon the roof hatch length).
g. One (1) Gate Panel as required per hatch.
h. Corner Brackets as required per hatch.
i. Pivot Brackets as required per hatch.
j. Center brackets as required per hatch.
k. Gate mounting post as required per hatch.

l. Complete hardware package as required for the size of hatch as required per hatch.
   1) Includes all bolts, locknuts, washers, pins, screws, nylon washers, neprene pads, and torsion rods per the size of the hatch.
m. Gate Latch Kit as required per hatch.

PART 3 - EXECUTION

3.1 EXAMINATION

A. Site verification of conditions:
   1. Prior to the execution of the work under this specification section, inspect the installed work executed under other sections of this Project Manual which affect the execution of work under this specification section.
   2. Report unacceptable conditions to the Architect. Do not begin work until unacceptable conditions have been corrected.
   3. Execution of work under this specification section shall constitute acceptance of existing conditions.

3.2 PREPARATION

A. Coordination:
   1. Coordinate work under this specification section with work specified under other sections to ensure proper and adequate interface of work.

B. Protection:
   1. Protect all adjacent surfaces from drips, spray, air pollution of surrounding environment, and other damage from work under this specification section.

C. Surface Preparation:
   1. Prepare surface in accordance with manufacturer's written instructions and recommendations.
   2. Clean substrates of substances (oil, grease, rolling compounds, incompatible primers, loose mill scale, etc.) which could impair bond of materials specified within this section.

3.3 INSTALLATION

A. General:
   1. In accordance with manufacturer's written instructions and recommendations unless specifically noted otherwise.
      a. Provide Hatch Railing System on all hatches or fire vents within ten (10) feet of any roof edge) and install in accordance with manufacturer's written instructions.
   2. In accordance with approved submittals.
   3. In accordance with Regulatory Requirements.
   4. Set plumb, level, and square.
   5. Damaged products shall not be installed.

B. Layout:
   1. Lines shall be straight and true.

3.4 FIELD QUALITY CONTROL

A. Site Tests:
   1. As required by Regulatory Requirements.

B. Inspection:
   1. As required by Regulatory Requirements.
   2. Schedule inspections and notify the Architect, Project Inspector and any other regulatory agencies of the time at least 48 hours prior to the inspection.
   3. No work shall be without the inspections required by Regulatory Requirements.

3.5 ADJUSTING

A. Test and adjust controls and safeties. Replace damaged or malfunctioning controls and equipment.

3.6 CLEANING

A. Clean in accordance with Specification Section - PROJECT CLOSEOUT.
   1. Clean any soiled surfaces immediately.
   2. Finish shall be clean and ready for the application of any additional finishes.
   3. In accordance with manufacturer's written instructions and recommendations.

END OF SECTION

SECTION 079200 – SEALANTS

PART 1 - GENERAL

1.1 SUMMARY

A. This Section includes the following:
   1. Provide all material, labor, equipment and services necessary to completely install all joint sealant materials, accessories and other related items necessary to complete the Project as indicated by the Contract Documents.

B. Related Sections: The following Project Manual Sections contain requirements that relate to this section:
   1. ALL DIVISION 00 SPECIFICATION SECTIONS.
   2. ALL DIVISION 01 SPECIFICATION SECTIONS.
   3. ALL SPECIFICATION SECTIONS IN THE FACILITY CONSTRUCTION SUBGROUP.
   4. ALL SPECIFICATION SECTIONS IN THE FACILITY SERVICES SUBGROUP.
   5. ALL SPECIFICATION SECTIONS IN THE SITE AND INFRASTRUCTURE SUBGROUP.

1.2 SYSTEM DESCRIPTION

A. Performance Requirements: It is the intention of this specification section and the drawings to form a guide for a complete and operable system. Any items not specifically noted but necessary for a complete and operable system shall be provided under this section.
   1. Provide elastomeric sealants for exterior applications that have been produced and installed to establish and to maintain watertight and airtight continuous seals without causing staining or deterioration of joint substrates.
   2. Provide sealants for interior applications that have been produced and installed to establish and maintain airtight continuous seals that are water-resistant and cause no staining or deterioration of joint substrates.

1.3 SUBMITTALS

A. Submit in accordance with Specification Section - SUBMITTAL PROCEDURES:
   1. Product data from manufacturers for each joint sealant product required.
   2. Shop drawings:
      a. Provide full details of all sealants and accessories proposed for use for approval by the Architect. All materials and products proposed shall be compatible with each other and with the substrates and adjacent wall colors, and shall be non-staining and non-bleeding. Submit an affidavit from the manufacturer confirming the acceptance of the use of the selected products in the manner and on the substrates proposed.
   3. Samples.

a. Samples for initial selection purposes in form of manufacturer's bead samples, consisting of strips of actual products showing full range of colors (standard, premium and custom) available, for each product exposed to view.
   1) Provide color chips of adjacent wall surface colors; to be used in evaluating the sealant color samples.

4. Quality Assurance/Control Submittals:
   a. Provide UL Assembly Classification appropriate for each fire rated penetration.
   b. Certificates:
      1) Submit three (3) copies of certificates.
         a) Certification by each joint sealant manufacturer that sealants plus the primers and cleaners required for sealant installation comply with local regulations controlling use of volatile organic compounds.
         b) Certified test reports for elastomeric sealants on aged performance as specified, including hardness stain resistance, adhesion, cohesion or tensile strength, elongation, low temperature flexibility, compression set, modulus of elasticity, water absorption, and resistance (aging, weight loss, deterioration) and heat and exposure to ozone and ultra violet light. Adhesion data shall include long-term adhesion characteristics of all adhesion surfaces including silicone, aluminum and glass coatings and long term weathering test on the silicone on contact with similar materials.
         c) Certificate of Installation: Signed by the installer and sealant manufacturer stating that sealant installed complies with specifications, and that installation methods comply with manufacturer's printed instructions for each condition of installation and use on the project. The sealant installer shall have no less that five years of continuous experience in installing the specified products. Their experience shall include similar work to this subject project. In addition, the manufacturers will provide written approval of the material installers.
   c. Manufacturer's Written Instructions:
      1) Submit three (3) copies of manufacturer's written instruction
   d. Closeout Submittals in accordance with Specification Sections in Division One:
   e. Warranty in accordance with Specification Section - WARRANTIES.

1.4 QUALITY ASSURANCE

A. Qualifications:
   1. Material Qualifications:
      a. Single Source Responsibility for Joint Sealant Materials: Obtain joint sealant materials from a single manufacturer for each different product required.
   2. Installer Qualifications:
      a. Engage an experienced Installer who has successfully completed three (3) projects of similar scope and size to that indicated for this Project.
   3. Manufacturer/Supplier Qualifications:
      a. Firm experienced in successfully producing/supplying products similar to that indicated for this Project, with sufficient production/supply capacity to produce/supply required units and colors without causing delay in the work.

B. Regulatory Requirements:

1. In accordance with Specification Section - REGULATORY REQUIREMENTS, and the following:
   a. AAMA American Architectural Manufacturer's Association
      1) AAMA 800-92 - "VOLUNTARY SPECIFICATIONS AND TEST METHODS FOR SEALANTS.
   b. ASTM American Society for Testing and Materials.
      1) ASTM C 1193 - "STANDARD GUIDE FOR USE OF JOINT SEALANTS".
   c. CA-CHPS - California High Performance Schools
   d. CARB Materials and equipment used for this Project shall comply with the current applicable regulations of the California Air Resources Board (CARB) and the Environmental Protection Agency (EPA), in the area where the project is located.
   e. GANA Glass Association of North America, 1997 Edition of the Glazing Manual, and the most recent Edition of the Sealant Manual.
   f. SWRI Sealant Waterproofing Restoration Institute - Types of standards as found in Chapter III "Sealants: The Professionals' Guide".

C. Meetings:
1. Pre-Installation: Scheduled by the Contractor prior to the start of work.
   a. Coordinate the work with all other related work.
   b. Identify any potential problems that may impede planned progress and proper installation of work regarding quality of installation and warranty requirements.
2. Progress: Scheduled by the Contractor during the performance of the work.
   a. Review for proper installation of work progress.
   b. Identify any installation problems and acceptable corrective measures.
   c. Identify any measures to maintain or regain project schedule if necessary.
3. Completion: Scheduled by the Contractor upon proper completion of the work.
   a. Inspect and identify any problems that may impede issuance of warranties or guaranties.
   b. Maintain installed work until the Notice of Substantial Completion has been executed.

1.5 DELIVERY, STORAGE, AND HANDLING

A. Deliver materials to Project site in original unopened containers or bundles with labels indicating manufacturer, product name and designation, color, expiration period for use, pot life, curing time, and mixing instructions for multi-component materials.
1. Comply with the Sealant Requirements of the GANA Glazing Manual and GANA Sealant Manual.

B. Store and handle materials in compliance with manufacturer's written recommendations to prevent their deterioration or damage due to moisture, high or low temperatures, contaminants, or other causes.
1. Store sealant containers in a protected location in accordance with their manufacturer's printed instructions until their use.

1.6 PROJECT CONDITIONS

A. Environmental requirements:

1. Apply materials within manufacturer's written recommended surface and ambient temperature ranges.
2. Apply materials when working joints are most likely to be normal size.
3. Do not install sealants under adverse weather conditions, or when temperatures are beyond manufacturer's written recommended limits.
   a. Proceed with the installation only when forecasted weather conditions are favorable for proper sealant cure, and development of early bond strength. Allow a minimum of three days after rain.
   b. Where joint width is affected by ambient temperature variations, install sealants only when temperatures are in the lower third of manufacturer's written recommended installation temperature range, so that sealant will not be subjected to excessive elongation and bond stress at low temperatures.

1.7 WARRANTY

A. Contractor's General Warranty:
   1. In accordance with Specification Section - WARRANTIES.

B. Manufacturer's Warranty:
   1. In accordance with Specification Section - WARRANTIES.
   2. Manufacturer shall warrant exterior joint sealant after substantial completion of work.
      a. Warranty Period Ten (10) Years.

C. Installer's Warranty:
   1. Sealant Contractor shall warrant sealants against defective materials and workmanship after substantial completion of work.
      a. Warranty Period Five (5) Years.
      b. Warranty shall further state that installed sealants are warranted against the following:
         1) Water leakage through sealed joints.
         2) Adhesive or cohesive failure of sealant.
         3) Staining of adjacent surfaces caused by migration of primer or sealant.
         4) Chalking or visible color change of the cured materials.
      c. The installer shall make repairs during the warranty period at no cost to the Owner.

PART 2 - PRODUCTS

2.1 MANUFACTURERS

A. These products listed herein establish the size, pattern, color range and function selected by the Architect for this Project. Manufacturers that are listed as acceptable alternative manufacturers and substitutions must still comply with the requirements of this project and the products listed in order to be approved as an equivalent during the Submittal Process. If the acceptable alternative manufacturers listed or substitutions are not approved during the Submittal Process due to non-compliance with the contract documents, then the Contractor shall submit product specified.
   1. Specified product manufacturer, or approved equivalent:
      a. One-Part Neutral Cure Silicone Sealant:
         1) PECORA "#890".

a) NOTE: For continual immersion in water conditions, provide PECORA "Dynatred".
b) If the water contains a chlorine content of 5ppm, then PECORA "Synthacalk GC2+" shall be used.

2) Acceptable alternative manufacturers for 1) only above:
a) BONDAFLEX "Sil 290".
b) DOW CORNING "#790".
c) SONNEBORN "Sonolastic 150" or "Sonolastic 150 VLM".

b. One-Part Acid-Curing Silicone Sealant:
1) PECORA "#860".
2) Acceptable alternative manufacturers:
a) BONDAFLEX "Sil 100 GP".
b) DOW CORNING "#999-A".
c) SONNEBORN "Omniplus".

c. One-Part Mildew-Resistant Silicone Sealant:
1) PECORA:
a) White Color Only "#345".
b) Available in multiple colors for selection "#898".
2) Acceptable alternative manufacturers to 1), a), above:
a) BONDAFLEX "Sil 100 WF".
b) DOW CORNING "#786".
c) SONNEBORN "Omniplus".

d. One-Part Gun Grade Urethane Sealant:
1) PECORA "Dynatrol I-XL".
2) Acceptable alternative manufacturers:
a) BONDAFLEX "Pur 25" or "Pur 25 Tex".
b) SIKA "Sikaflex 1a" or "Sika Textured".
c) SONNEBORN "NP1 Smooth" or "X1 Textured".
d) VULKEM "#116".

e. Multi-Component Gun Grade Urethane Sealant:
1) PECORA "Dynatred".
2) Acceptable alternative manufacturers:
a) BONDAFLEX "Pur 2 NS".
b) SIKA "Sikaflex 2c NS".
c) SONNEBORN "NP2".

f. Multi-Component Gun Grade Urethane Sealant (Fast Curing):
1) PECORA "Dynatred".
2) Acceptable alternative manufacturers:
a) BONDAFLEX "Pur 2 NS".
b) SIKA "Sikaflex 2c NS".
c) SONNEBORN "NP2" with manufacturer's accelerator.
d) VULKEM "#227".

g. One-Part or Multi-Component Gun Grade Urethane Sealant (Security Sealant) :
1) PECORA "Dynaflex".
2) Acceptable alternative manufacturers:
a) BONDAFLEX "Pur 2 NS".
b) SIKA "Sikaflex 2c NS TG".
c) SONNEBORN "Ultra".

h. One-Part Pourable Self-Leveling Urethane Sealant:
1) PECORA "Urexpan NR-201" or "Dynatred".
2) Acceptable alternative manufacturers:

a) BONDAFLEX "Pur 35 SL".
b) SIKA "Sikaflex 1c SL".
c) SONNEBORN "Sonolastic SL 1".
d) VULKEM "#45".

i. Multi-Component Pourable Self-Leveling Urethane Sealant (Fast Curing):
1) PECORA "Urexpan NR-200".
2) Acceptable alternative manufacturers:
a) BONDAFLEX "Pur 2 SL".
b) SIKA "Sikaflex 2c SL".
c) SONNEBORN "Sonolastic SL 2".
d) VULKEM "#245/255".

j. Acrylic-Emulsion Sealant:
1) PECORA "AC-20".
2) Acceptable alternative manufacturers:
a) BONDAFLEX "Sil-A 700".
b) SONNEBORN "Sonolac".

k. One-Part Butyl Sealant:
1) PECORA "BC-158".
2) Acceptable alternative manufacturers:
a) PTI (by H.B. FULLER) "#707".

l. Acoustical Sealant:
1) PECORA:
a) Exposed and Fire Rated areas; Pecora "AC-20 FTR".
b) Concealed areas: Pecora "AIS-919".
2) Acceptable alternative manufacturers:
a) BONDAFLEX "Sil-A 700".
b) OSI "GRABBER" #GSCS.
c) TREMCO INC. 834.
d) W.W. HENRY "#413".

m. Firestop Sealants: Use in designated Fire-Rated Assemblies in accordance with approved UL Classified Assemblies.
1) HILTI
2) Acceptable alternative manufacturers:
a) 3M
b) PECORA

n. Firestop Putty Pads: Use in Fire-Rated Assemblies where penetration holes are too large for caulk, in accordance with approved UL Classified assemblies:
1) HEVI-DUTY / NELSON "Putty Pads".

o. Glazing Tape Sealants:
1) Butyl Glazing Tape:
a) PECORA "Extru-Seal".
b) Acceptable alternative manufacturers:
c) TREMCO, INC. "440 Tape".
2) Butyl Pressure Glazing Tape:
a) PECORA "Dyna-Seal".

p. Pre-Compressed Foam Sealants:
1) EMSEAL CORP. "Emseal".

q. Sheet Caulking (Electrical Junction Box Sealers):
1) LOWRY "Electrical Box Sealer".
2) Acceptable alternative manufacturer:

a) TREMCO INC. "Sheet Caulking".

r. EIFS preformed paintable Urethane Tape:

1) SIKA "Sikaflex PUR" Tape System.

B. Products from other manufacturers not listed must submit in accordance with Specification Section - SUBSTITUTION PROCEDURES.

2.2 MATERIALS

A. General:

1. Compatibility: Provide sealants, joint fillers, and other related materials that are compatible with one another and with joint substrates under conditions of service and application, as demonstrated by sealant manufacturer based on testing and field experience.

a. Colors: Provide color of exposed sealants to comply with the following:

1) Sealant colors shall match adjacent wall color.

2) Provide selections made by Architect from manufacturer's full range of standard colors for products of type indicated.

B. Elastomeric Sealant Standard: Provide manufacturer's standard chemically curing elastomeric sealants (Silicones, Urethanes, and Acrylics) that comply with ASTM C 920 "Specification for Elastomeric Joint Sealants", and other requirements indicated on each Elastomeric Joint Sealant listed, including those requirements referencing ASTM C 920 "Specification for Elastomeric Joint Sealants", classifications for Type, Grade, Class, and Uses.

1. Additional Movement Capability: Where additional movement capability is specified in Elastomeric Joint Sealant listed, provide products with the capability, when tested for adhesion and cohesion under maximum cyclic movement per ASTM C 719 "Test Method for Adhesion and Cohesion of Elastomeric Joint Sealants Under Cyclic Movement (Hockman Cycle)", to withstand the specified percentage change in the joint width existing at time of installation.

C. Acrylic-Emulsion Sealant: Provide product complying with ASTM C 834 "Specification for Latex Sealants", that accommodates joint movement of not more than 5 percent in both extension and compression for a total of 10 percent.

D. Butyl Sealant: Manufacturer's standard one-part, non-sag, solvent-release-curing, polymerized butyl sealant complying with ASTM C 1311 "Standard Specification for Solvent Release Sealants", and formulated with minimum of 75 percent solids to be nonstaining, paintable, and have a tack-free time of 24 hours or less.

E. Acoustical Sealant: Manufacturer's non-drying, non-bleeding and non-hardening butyl sealant complying with ASTM C 834 "Specification for Latex Sealants", and the following requirements:

1. Product is effective in reducing airborne sound transmission through perimeter joints and openings in building construction as demonstrated by testing representative assemblies per ASTM E 90 "Test method for Laboratory Measurement of Airborne Sound Transmission Loss of Building Partitions and Elements".

2. For fire rated conditions, use an acoustical sealant that has at least Class II Flame Spread and Smoke Developed ratings in accordance with ASTM E-84 "Test method for Surface Burning Characteristics of Building Materials", as follows:

a. Flame Spread Rating 53.

b. Smoke Developed Rating 117.

F. Firestop Pillows / Bags: In accordance with UL Classified systems. Reusable, heat-expanding pillows / bags consisting of glass-fiber cloth cases filled with a combination of mineral-fiber, water-insoluble expansion agents and fire-retardant additives.

G. Firestop Sealants: In accordance with ASTM E 814 "Specification for Latex Sealants", and ANSI/UL 1479 Classified systems.
1. Grade for Horizontal Surfaces: Pourable (self-leveling) formulation for openings in floors and other horizontal surfaces.
2. Grade for Vertical Surfaces: Nonsag formulation for openings in vertical and other surfaces.

2.3 ACCESSORIES

A. Tape: Manufacturer's standard, solvent-free, butyl-based tape sealant with a solids content of 100 percent formulated to be nonstaining, paintable, and nonmigrating in contact with nonporous surfaces with or without reinforcement thread to prevent stretch and packaged on rolls with a release paper on one side.

B. Pre-compressed Foam: Manufacturer's standard preformed, pre-compressed, impregnated open-cell foam sealant manufactured from high-density urethane foam impregnated with a nondrying, water repellent agent; factory-produced in pre-compressed sizes and in roll or stick form to fit joint widths indicated and to develop a watertight and airtight seal when compressed to the degree specified by manufacturer; and complying with the following requirements:
1. Properties: Permanently elastic, mildew-resistant, nonmigratory, nonstaining, and compatible with joint substrates and other sealants.
2. Impregnating Agent: Manufacturer's standard.
3. Density: Manufacturer's standard.
4. Backing: Pressure-sensitive adhesive factory applied to one side with protective wrapping.

C. Backing Rods (Joint Sealant Backing):
1. General: Provide sealant backings of material and type that are nonstaining; are compatible with joint substrates, sealants, primers and other joint fillers; and are approved for applications indicated by sealant manufacturer based on field experience and laboratory testing.
2. Plastic Foam Joint Fillers: Preformed, compressible, resilient, nonstaining, nonwaxing, nonextruding strips of flexible plastic foam of material indicated below and of size, shape, and density to control sealant depth and otherwise contribute to producing optimum sealant performance:
   a. Open-cell polyurethane foam.
   b. Closed-cell polyethylene foam, nonabsorbent to liquid water and gas, nonoutgassing in unruptured state.
   c. Closed-cell polyethylene foam, nonabsorbent to liquid water and gas, nonoutgassing in unruptured state.
   d. Any material indicated above.

3. Elastomeric Tubing Joint Fillers: Neoprene, butyl, EPDM, or silicone tubing complying with ASTM D 1056, nonabsorbent to water and gas, capable of remaining resilient at temperatures down to -26 deg F. Provide products with low compression set and of size and shape to provide a secondary seal, to control sealant depth, and otherwise contribute to optimum sealant performance.
4. Bond-Breaker Tape: Polyethylene tape or other plastic tape as recommended by sealant manufacturer for preventing sealant from adhering to rigid, inflexible joint filler materials or joint surfaces at back of joint where such adhesion would result in sealant failure. Provide self-adhesive tape where applicable.
5. Acoustical Sheet Caulking for junction boxes: LOWRY'S Electrical Box Sealer, or TREMCO INC. sheet caulking

D. Miscellaneous Materials:
1. Primer: Material recommended by joint sealant manufacturer where required for adhesion of sealant to joint substrates indicated, as determined from preconstruction joint sealant-substrate tests and field tests.
2. Cleaners for Nonporous Surfaces: Chemical cleaners acceptable to manufacturers of sealants and sealant backing materials, free of oily residues or other substances capable of staining or harming in any way joint substrates and adjacent nonporous surfaces, and formulated to promote optimum adhesion of sealants with joint substrates.
3. Masking Tape: Non-staining, nonabsorbent material compatible with sealants and surfaces adjacent to joints. Use the type of masking tapes available that is compatible to the substrate being masked without damaging the surface material of finish when removed.

PART 3 - EXECUTION

3.1 EXAMINATION

A. Site verification of conditions:
1. Prior to the execution of the work under this specification section, inspect the installed work executed under other specification sections of this Project Manual which, affect the execution of work under this specification section.
2. Report unacceptable conditions to the Architect. Do not begin work until unacceptable conditions have been corrected.
3. Execution of work under this specification section shall constitute acceptance of existing conditions.

3.2 PREPARATION

A. Surface Cleaning of Joints: Clean out joints immediately before installing sealants to comply with recommendations of joint sealant manufacturer and the following requirements:
1. Remove all foreign material from joint substrates that could interfere with adhesion of joint sealant, including dust, paints (except for permanent, protective coatings tested and approved for sealant adhesion and compatibility by sealant manufacturer), old sealants, oil, grease, waterproofing, water repellents, water, surface dirt, and frost.

2. Clean concrete, masonry, unglazed surfaces of ceramic tile, and similar porous joint substrate surfaces by brushing, grinding, blast cleaning, mechanical abrading, or a combination of these methods to produce a clean, sound substrate capable of developing optimum bond with sealants. Remove loose particles remaining from above cleaning operations by vacuuming or blowing out joints with oil-free compressed air.
3. Remove laitance and form release agents from concrete.
4. Clean metal, glass, porcelain enamel, glazed surfaces of ceramic tile, and other nonporous surfaces with chemical cleaners or other means that do not stain, harm substrates, or leave residues capable of interfering with adhesion of sealants.

B. Joint Priming: Prime joint substrates where indicated or where recommended by joint sealant manufacturer based on preconstruction joint sealant-substrate tests or prior experience. Apply primer to comply with joint sealant manufacturer's written recommendations. Confine primers to areas of joint sealant bond; do not allow spillage or migration onto adjoining surfaces.
   1. Masking Tape: Use the appropriate masking tape (type selected to the substrate so as not to mar the surface it is protecting) where required to prevent contact of sealant with adjoining surfaces that otherwise would be permanently stained or damaged by such contact or by cleaning methods required to remove sealant smears. Remove tape immediately after tooling without disturbing joint seal.

3.3 INSTALLATION

A. General:
   1. Comply with joint sealant manufacturer's written installation instructions applicable to products and applications indicated, except where more stringent requirements apply. Sealant Installation Standard: Comply with recommendations of ASTM C 1193 "Standard Guide for Use of Joint Sealants", for use of sealants as applicable to materials, applications, and conditions indicated.
      a. Acoustical Sealant Application Standard: Comply with recommendations of ASTM C 919 "Practice for Use of Sealants in Acoustical Applications", as applicable to materials, applications, and conditions indicated.
      b. Installation of Sealant Backings: Install sealant backings to comply with the following requirements:
         1) Install joint fillers of type indicated to provide support of sealants during application and at position required to produce the cross-sectional shapes and depths of installed sealants relative to joint widths that allow optimum sealant movement capability
            a) Do not leave gaps between ends of joint fillers.
            b) Do not stretch, twist, puncture, or tear joint fillers.
            c) Remove absorbent joint fillers that have become wet prior to sealant application and replace with dry material.
         2) Install bond breaker tape between sealants where backer rods are not used between sealants and joint fillers or back of joints.
      c. Installation of Sealants: Install sealants by proven techniques that result in sealants directly contacting and fully wetting joint substrates, completely filling recesses provided for each joint configuration, and providing uniform, cross-sectional shapes and depths relative to joint widths that allow optimum sealant movement capability. Install sealants at the same time sealant backings are installed.
         1) For normal moving joints not subject to traffic: Fill joints to a depth equal to 50% of joint width, but not less than 1/4" deep or more than 1/2" deep. In no case shall the applied sealant width exceed the sealant depth.

2) Assure that the *bond line* surface is a minimum of 1/4" wide. Install approved backer material at a proper depth to provide sealant bead profiles as detailed on approved shop drawings. Backer material shall be of appropriate size and shape and shall be compressed between 25% and 50% when installed.
3) Backer material may not be modified in-lieu of using the properly dimensioned material. Install, when required a polyethylene, or other approved, bond backer tape to provide sealant bead profiles as detailed on approved shop drawings.

d. Do not allow sealants, primers, or other compounds to overflow, spill or migrate into voids of adjacent construction.

e. Remove excess sealant spillage promptly as this work progresses. Clean adjacent surfaces by recommended means to remove sealant, but not damage the surfaces. Remove all cartons and debris from the site as the work progresses and at the end of each work day. Joints shall be prepared and sealed on the same working day.

f. Tooling of Non-sag Sealants: Immediately after sealant application and prior to time skinning or curing begins, tool sealants to form smooth, uniform beads of configuration indicated, to eliminate air pockets, and to ensure contact and adhesion of sealant with sides of joint. Remove excess sealants from surfaces adjacent to joint. Do not use tooling agents that discolor sealants or adjacent surfaces or are not approved by sealant manufacturer.
1) Provide concave joint configuration per Figure 5A in ASTM C 1193 "Standard Guide for Use of Joint Sealants", unless otherwise indicated.
2) Provide flush joint configuration, per Figure 5B in ASTM C 1193 "Standard Guide for Use of Joint Sealants", where indicated.
a) Use masking tape to protect adjacent surfaces of recessed and tooled joints.
3) Provide recessed joint configuration, per Figure 5C in ASTM C 1193 "Standard Guide for Use of Joint Sealants", of recess depth and at locations indicated.

g. Installation of Preformed Foam Sealants: Install each length of sealant immediately after removing protective wrapping, taking care not to pull or stretch material, and to comply with sealant manufacturer's written directions for installation methods, materials, and tools that produce seal continuity at ends, turns, and intersections of joints. For applications at low ambient temperatures where expansion of sealant requires acceleration to produce seal, apply heat to sealant in conformance with sealant manufacturer's written recommendations.

h. Acoustical Sealant Applications:
1) Provide acoustical sealant to form an airtight seal at all penetrations and perimeter of sound-rated partitions, floors and ceilings. Comply with requirements of specification section titled Gypsum Board. Use backer-rod where gaps to be sealed exceed 3/8 inches.
2) Provide sheet caulking to seal the back and sides of all junction boxes (4 gang and smaller) recessed in acoustically-rated partitions.
3) Provide acoustical sealant as a continuous bead along gypsum board face layer at all head and sill conditions of sound-rated partitions and around the perimeter of resilient ceilings.

i. Firestop Sealants: In accordance with applicable UL Classified numbers compatible with products provided.

3.4 CLEANING

A. Clean in accordance with Specification - PROJECT CLOSEOUT.
   1. Clean any soiled surfaces immediately.
   2. Clean off excess sealants or sealant smears adjacent to joints as work progresses by methods and with cleaning materials approved by manufacturers of sealants and of products in which joints occur.

3.5 PROTECTION

A. Protect sealants during and after curing period from contact with contaminating substances or from damage resulting from construction operations or other causes so that they are without deterioration or damage at time of Substantial Completion. If, despite such protection, damage or deterioration occurs, cut out and remove damaged or deteriorated sealants immediately so that and installations with repaired areas are indistinguishable from original work.

3.6 SCHEDULES

A. Sealant Schedule:

B. Sealants: Description of joint construction and location where sealant is typically applied
   1. One-Part Neutral Cure Silicone Sealant:
      a. Exterior and interior joints in vertical surfaces of concrete and masonry.
      b. Between concrete masonry and stone.
      c. Between metal and concrete, mortar, and stone.
      d. Interior and exterior perimeter joints of metal frames in exterior walls.
      e. Exterior overhead joints.
      f. Use the applicable sealant for continual immersion in water applications, such as swimming pools, fountains and cooling towers – USDA Approved.
   2. One-Part Acid-Curing Silicone Sealant:
      a. Exposed joints within glazed curtain wall framing systems, skylight framing systems, and aluminum entrance framing systems, if applicable.
   3. One-Part Mildew-Resistant Silicone Sealant:
      a. White Grout Joints: Provide white silicone sealant material to match adjacent white grout joints in interior joints in vertical surfaces of ceramic tile in toilet rooms, showers, and kitchens.
      b. Colored Grout Joints: Provide colored silicone sealant material to match adjacent colored grout joints in interior joints in vertical surfaces of ceramic tile in toilet rooms, showers, and kitchens.
   4. One-Part Gun Grade Urethane Sealant:
      a. Exposed joints in pre-cast, masonry, window frame perimeters and similar types of construction joints.
   5. Multi-Component Gun Grade Urethane Sealant:
      a. Control joints and window and door perimeters.
   6. Multi-Component Gun Grade Urethane Sealant (Fast Curing):
      a. Plaza Decks.
   7. One-Part or Multi-Component Gun Grade Urethane Sealant (Security Sealant):

a. Control joints and window and door perimeters where sealant is exposed to physical abuse.

8. One-Part Pourable Self-Leveling Urethane Sealant:
   a. Exterior and interior joints in horizontal surfaces of concrete.
   b. Exterior and interior joints in horizontal surfaces between metal and concrete, mortar, stone, and masonry surfaces.
9. Multi-Component Pourable Self-Leveling Urethane Sealant (Fast Curing):
   a. For use when walking surfaces require use within 24 hours of application without damage to joint surfaces.
   b. Exterior and interior joints in horizontal surfaces of concrete.
10. Acrylic-Emulsion Sealant:
   a. Paintable joints for the following surfaces expected to receive field painting:
      1) Interior joints in vertical and overhead surfaces at perimeter of elevator door frames and door frames (not requiring security grade sealant).
      2) Interior joints in gypsum board, plaster, concrete, and concrete masonry.
      3) All other interior field paintable joints not indicated otherwise.
11. One-Part Butyl Sealant:
   a. Primarily used for glazing seals where little or no movement is expected.
12. Acoustical Sealant:
   a. Joints to control dust, air, smoke and sound transmission, including under all exterior wall sill plates placed on top of Cast-In-Place Concrete slabs.
13. Firestop Sealants:
   a. In fire-rated walls, compatible with wall ratings and in accordance with applicable penetration types in walls and floors, and in accordance with UL Classified numbers.

END OF SECTION

INTENTIONALLY LEFT BLANK

SECTION 081100 – METAL DOORS AND FRAMES

PART 1 - GENERAL

1.1 SUMMARY

A. This Section includes the following:
   1. Provide all material, labor, equipment and services necessary to fabricate and install all Custom Metal Doors and Custom Metal Frames materials, accessories and other related items necessary to complete the Project as indicated by the Contract Documents.
      a. Fire-Rated and Smoke-Rated Assemblies.
   2. Provide all material, labor, equipment and services necessary to fabricate and install Temperature Rise Fire-Rated Assemblies.

B. Related Sections: The following Project Manual Sections contain requirements that relate to this section:
   1. ALL DIVISION 00 SPECIFICATION SECTIONS.
   2. ALL DIVISION 01 SPECIFICATION SECTIONS.
   3. 03 15 14 DRILLED ANCHORS
   4. 03 30 00 CAST-IN-PLACE CONCRETE
   5. 04 22 00 CONCRETE MASONRY UNITS
   6. 05 12 00 STEEL AND FABRICATIONS
   7. 06 10 00 ROUGH CARPENTRY
   8. 07 40 00 METAL PANELS
   9. 07 60 00 SHEET METAL
   10. 07 92 00 SEALANTS
   11. 08 14 16 WOOD DOORS
   12. 08 80 00 GLASS
   13. 09 24 00 CEMENT PLASTER
   14. 09 29 00 GYPSUM BOARD
   15. 09 30 00 TILE
   16. 09 65 16 RESILIENT SHEET
   17. 09 67 23 RESINOUS FLOORING
   18. 09 68 40 CARPET
   19. 09 72 00 WALL COVERINGS
   20. 09 91 00 PAINTING
   21. 10 05 00 MISCELLANEOUS SPECIALTIES
   22. 10 14 00 IDENTIFYING DEVICES
   23. DIVISION 13 SPECIAL CONSTRUCTION
   24. DIVISION 14 CONVEYING EQUIPMENT
   25. ALL SPECIFICATION SECTIONS IN THE FACILITY SERVICE SUBGROUP.

1.2 REFERENCES

A. Standards:
   1. In accordance with the following standards:
      a. ANSI American National Standards Institute
      b. ASTM American Society of Testing and Materials

c. AWS American Welding Society
d. HMMA Hollow Metal Manufacturers Association (Division of NAAMM)
e. NAAMM National Association of Architectural Metal Manufacturers
f. NFPA National Fire Protection Association
g. NILECJ National Institute of Law Enforcement and Criminal Justice
h. UL Underwriter's Laboratory, Inc.
i. USSG U.S. Standard Gages
j. WH Warnock Hersey International

1.3 DEFINITIONS

A. Minimum Thickness: Base metal thickness without coatings.

B. Custom Hollow Metal Work: Hollow metal work fabricated according to ANSI / NAAMM-HMMA.

C. Glazing Molding: Portion of the assembly retaining glazing materials or in-fill panels in a hollow metal door which contain the integral glazing stop, or to which a glazing stop is attached.

D. Glazing Stop: A formed metal section used to secure glazing in a door or frame.

E. Prepared Opening: Existing opening or wall constructed prior to installation of frames.

1.4 SYSTEM DESCRIPTION

A. Design Requirements:
1. Metal Doors, Metal Panels and Metal Frames Assemblies.
a. All Doors and Panels shall be custom in accordance to NAAMM-HMMA Standards for Hollow Metal Doors.
b. All Frames shall be custom in accordance to NAAMM-HMMA Standards for Hollow Metal Frames.
2. Fire Rated Assemblies:
a. Doors, Panels and Frames Assemblies shall be custom in accordance to NAAMM-HMMA Standards for Fire-Rated Hollow Metal Doors and Frames and shall comply with all of the requirements for Doors[, Panels] and Frames.
b. Conform to the requirements of CBC, Chapter 7 "Fire-Resistance-Rated Construction".
1) Fire-Rated Door Assemblies shall comply with NFPA 252 "Standard Methods of Fire Tests of Door Assemblies" and UL 10C "Positive Pressure Fire Tests for Door Assemblies".
2) Fire-Rated Window Assemblies shall comply with NFPA 257 "Fire Testes for Fire Window Assemblies and Glass Block Assemblies", NFPA 80 "Standard for Fire Doors and Other Opening Protectives", and UL 9 "Fire Tests of Window Assemblies".
3) Fire-Rated Door Assemblies shall also meet the requirements for a Smoke and Draft Control Door Assembly, complying with UL 1784 "Air Leakage Tests for Door Assemblies".

4) Fire-Rated Doors, Panels, and Frames shall be labeled by an DSA/FLSapproved agency and shall comply with NFPA 80 "Standard for Fire Doors and Other Opening Protectives" and UL 1784 "Air Leakage Test for Door Assemblies".

c. All Fire-Rated Doors are to be positive latching and self or automatic closing in accordance with NFPA 80 "Standard for Fire Doors and Other Opening Protectives".

d. All Fire-Rated Assemblies shall be provided with approved gasketing material, so installed as to provide a seal where the door meets the stop on both sides and across the top.

1) Continuous Hinges, Seals, etc. shall not obscure ratings of doors or door frames.

3. Temperature Rise Fire-Rated Framing System:

1.5 SUBMITTALS

A. Submit in accordance with Specification Section - SUBMITTAL PROCEDURES.

1. Contractor shall check all drawings and verify all dimensions (including wall thickness) in the field prior to fabrication.
2. Contractor shall verify that shop drawings include all required materials and material clearances.

B. Product Data:

1. Include construction details, material descriptions, core descriptions, label compliance, fire-resistance ratings, temperature-rise ratings, and finishes for each type of product indicated.
   a. Provide information indicating all the Structural Properties of the steel materials.

C. Shop Drawings:

1. Include, but not limited to, the following information:
   a. Elevations of each door design and frame configuration.
   b. Details of doors, including vertical and horizontal edge details.
   c. Frame details for each frame type, including dimensioned profiles.
   d. Details and location of reinforcement and preparations for hardware.
   e. Details of each different wall opening condition.
   f. Details of anchorages, joints, field splices, and connection.
   g. Details of accessories.
   h. Details of moldings, removable stops, and glazing.
   i. Details of louvers, including sizes and location in doors, where required.
   j. Details of conduit and preparations for power, signal, and control systems.
2. Provide a Schedule, prepared by or under the supervision of supplier for doors, panels, and frames using same reference numbers for details and openings as those on the Drawings.
   a. Coordinate with door hardware schedule.
3. Provide setting drawings, templates, and directions for installing anchorage, including sleeves, concrete inserts, anchors, bolts, and items with integral anchors for installation coordination.
4. Manufacturer's printed instructions for preparation, installation and care requirements for installers and inspecting authorities.

D. Samples:

1. When factory applied color is indicated, provide manufacturer's full range of factory applied color finishes for selection.
2. When Stainless Steel is indicated, provide samples of 3 inches by 5 inches for each type of exposed finish required.
   a. Frames: Provide fabrication samples of profile and corner joints.
   b. Doors: Provide fabrication sample of corner showing vertical edges and top.

E. Quality Assurance/Control Submittals:
1. Design Data:
2. Test Reports:
   a. Product Test Reports based on evaluation of comprehensive test performed by a qualified testing agency, for each type of fire-rated metal door, panel, and frame assembly.
   b. Water Tightness Test Reports.
3. Certificates:
   a. Oversized Construction Certification.
   b. Installer Certification for Temperature Rise Fire Rated Framing System.

F. Closeout Submittals in accordance with the following:
1. General Construction Warranty.
2. Workmanship and Materials Warranty.

1.6 QUALITY ASSURANCE

A. Qualifications:
1. Material Qualifications:
   a. Fire-Rated Doors, Panels, and Frames Assemblies shall be labeled by an DSA/FLS approved agency and shall comply with NFPA 80 "Standard for Fire Doors and Other Opening Protectives" and UL 1784 "Air Leakage Test for Door Assemblies".
   b. Oversized Door Assemblies required to be fire rated and exceeds the limitations of labeled assemblies, a certificate of inspection shall be furnished by an approved testing agency in lieu of an Oversized Fire Door Label.
2. Installer Qualifications:
   a. Installer shall be experienced and shall have successfully completed three (3) projects of similar scope and size to that indicated for this Project.
   b. Installer(s) shall have participated in mock-up installation that was successfully tested for water tightness.
3. Manufacturer/Supplier Qualifications:
   a. Manufacturer/Supplier shall have successfully produced/supplied products similar to that required for this Project, and shall have sufficient production/supply capacity to produce/supply required units without causing delay in the work.
   b. Manufacturers must be members of the HMMA, who have been engaged for at least two years in the production for sale of swing steel doors and frames on a national basis.
      1) All doors, panels and frames shall be manufactured and supplied by the same manufacturer.
   c. Manufacturer/Supplier of Temperature Rise Fire Rated Framing System shall provide experienced mechanics familiar with this type of specialized work.

B. Regulatory Requirements:

1. In accordance with Specification Section - REGULATORY REQUIREMENTS, and the following:
   a. CARB Materials and equipment used for this Project shall comply with the current applicable regulations of the California Air Resources Board (CARB) and the Environmental Protection Agency (EPA), in the area where the Project is located.

C. Certifications:
1. Oversized Construction Certification for Fire-Rated Door Assemblies shall state that the door conforms to the requirements of the design, materials and construction, but has not been subjected to the fire test.
2. Manufacturer of Temperature Rise Fire-Rated Framing System shall certify the Installer, in writing, as qualified to install manufacturer's systems in accordance with manufacturer's warranty requirements.

D. Mock Ups:
1. Provide Mock-Ups prior to application of the final layer of the finished exterior wall material and prior to installation of any exterior wall cavity and interior materials.
2. Metal Frame Assembly:
   a. Mock-Ups shall be of each type of opening assembly in every type of exterior wall assembly in which an opening occurs, shall integrate all other related work assemblies and shall be representative of the intended end use configuration.
      1) Provide a Mock-Up with a minimum opening size of *24 inches square* for window opening.
   b. Mock Ups will be used for establishing construction sequence, and installation requirements of materials, and creating water tight assemblies.
   c. Mock-Ups may become part of the completed Work upon successful testing for water tightness.
3. Installation:
   a. The Project Inspector, the Architect, Contractor’s Superintendent and Sub-contactor’s Superintendent shall observe the installation of materials.
   b. Installation crew for the Mock-Ups shall be the installers of the metal frame systems for this project and installers, as necessary, of other related work assemblies.
   c. Mock Ups shall include the installation of integral flashing, glazing, louvers, sheet metal flashing, sealants, water barriers and penetration flashing of exterior material systems and other materials of related work that makes the openings watertight.
   d. Failed Mock Ups shall be removed and the assembly reinstalled until the water tightness test is successful.

E. Meetings:
1. Pre-Installation: Scheduled by Contractor prior to the start of work.
   a. Coordinate the work with all other related work.
   b. Identify any potential problems that may impede planned progress and proper installation of work regarding quality of installation and warranty requirements.
2. Progress: Scheduled by the Contractor during the performance of the work.
   a. Review for proper installation of work progress.
   b. Identify any installation problems and acceptable corrective measures.
   c. Identify any measures to maintain or regain project schedule if necessary.
3. Completion: Scheduled by the Contractor upon proper completion of the work.

a. Inspect and identify any problems that may impede issuance of warranties or guaranties.
b. Establish protection procedures to maintain installed work until the Notice of Substantial Completion has been executed.

1.7 DELIVERY, STORAGE, AND HANDLING

A. Packing, shipping, handling, and unloading:
1. Doors, Panels, and Frames shall be palletized, wrapped, or crated to provide protection during transit and Project-Site storage. Do not use non-vented plastic.
a. Provide additional protection to prevent dents, scratches and other damage.

B. Acceptance at Site:
1. Do not deliver doors, panels, and frames to project site until Installer is ready and the site conditions will accommodate the installation of frames.
2. Damaged products will not be accepted.

C. Storage and Protection:
1. Storage and protection shall be in accordance with NAAMM-HMMA 840 Standard, "Installation and Storage of Hollow Metal Doors and Frames".
2. Store Doors, Panels, and Frames under cover at Project Site. Stored on level platforms, minimum six (6) inches above ground, allowing air circulation under stacked units.
a. Doors, Panels, and Frames shall be placed in the up-right position, spaced by blocking to allow ventilation between units.
b. Cover materials with protective waterproof covering providing for adequate air circulation and ventilation.

1.8 PROJECT CONDITIONS

A. Existing Conditions:
1. Examine site and compare it with the drawings and specifications. Thoroughly investigate and verify conditions under which the work is to be performed. No allowance will be made for extra work resulting from negligence or failure to be acquainted with all available information concerning conditions necessary to estimate the difficulty or cost of the work.
2. Field Measurements: Verify openings by field measurements before fabrication and indicate measurements on Shop Drawings.
a. Established Dimensions: Where field measurements cannot be made without delaying the Work, establish opening dimensions for the fabrication of custom frames. Coordinate wall construction to ensure that actual opening dimensions correspond to established dimensions.

1.9 WARRANTY

A. Contractor's General Warranty:
1. In accordance with Specification Section - WARRANTIES.

B. Manufacturer’s Warranty:

1. Provide the Temperature Rise Rated Framing system warranty against defective workmanship and materials.
   a. Warranty Period Five (5) years upon project completion and acceptance.
2. All other Doors and Frames in accordance with manufacturer's written standard warranty:
   a. Warranty Period One (1) Year.

C. Installer's Warranty:
1. Issue to the Owner a warranty against defective workmanship and materials.
   a. Warranty period Four (4) Years.
   b. In accordance with the terms of the Specification Section - WARRANTIES.
   c. Warranty shall include the responsibility for the repairs of any failure that is the result of defects in materials and workmanship.
   d. Warranty shall certify that the installation of all exterior Metal Doors and Frames were done in accordance with the method and procedures established with the successful Mock-Up for water tightness.
   e. The Warranty shall be co-endorsed by the General Contractor, the Metal Door and Frame Material Manufacturer, the Metal Door and Frame Installer and Glazing Installer.

PART 2 - PRODUCTS

2.1 MANUFACTURERS

A. These products listed herein establish the size, pattern, color range and function selected by the Architect for this Project. Manufacturers that are listed as acceptable alternative manufacturers and substitutions must still comply with the requirements of this project and the products listed in order to be approved as an equivalent during the Submittal Process. If the acceptable alternative manufacturers listed or substitutions are not approved during the Submittal Process due to non-compliance with the contract documents, then the Contractor shall submit product specified.
1. Custom Metal Doors, Panels and Frames:
   a. SECURITY METAL PRODUCTS CORPORATION.
   b. Acceptable alternative manufacturers:
      1) CURRIES COMPANY.
      2) METAL MANUFACTURING CO., INC.
      3) STILES CUSTOM METAL, INC.
2. Temperature Rise Fire-Rated Framing System:

B. Products from other manufacturers not listed must submit in accordance with Specification Section - SUBSTITUTION PROCEDURES.

2.2 MATERIALS

A. Cold-Rolled Steel Sheet: Commercial Steel (CS), Type B, conforming with ASTM A 1008/A 1008M "Standard Specification for Steel Sheet, Cold-Rolled, Carbon, Structural, High-Strength Low-Alloy and High-Strength Low-Alloy with Improved Formability, Solution Hardened, and Bake Hardenable". Steel shall be suitable for exposed to view applications.

B. Hot-Rolled Steel Sheet: Commercial Steel (CS), Type B, conforming with ASTM A 1011/A 1011M "Standard Specification for Steel, Sheet and Strip, Hot-Rolled, Carbon, Structural, High-Strength Low-Alloy, High-Strength Low-Alloy with Improved Formability, and Ultra-High Strength". The steel shall be pickled and oiled, free of scale, pitting, coil-breaks or other surface defects.

C. Metallic-Coated Steel Sheet: Commercial Steel (CS), Type B, complying with ASTM A 653/A 653M "Standard Specifications for Steel Sheet, Zinc-Coated (Galvanized) or Zinc-Iron Alloy-Coated (Galvannealed) by the Hot-Dip Process". The steel shall have a minimum G60 (Z180) zinc (galvanized) or A60 (ZF 180) zinc-iron-alloy (galvannealed) coating designation.

D. Inserts, Bolts and Fasteners: Hot-dip galvanized according to ASTM A 153/A 153M "Standard Specification for Zinc Coating (Hot-dip) on Iron and Steel Hardware".

E. Grout:
1. Concrete Walls: Comply with ASTM C476 "Standard Specification for Grout for Masonry", with a maximum slump of 4 inches, as measured according to ASTM C 143/C 143M "Standard Test Method for Slump of Hydraulic-Cement Concrete".
2. Masonry Walls: Mortar comply with Specification Section - CONCRETE MASONRY UNITS.

F. Insulation:
1. Mineral-Fiber Insulation: ASTM C 665 "Specification for Mineral-Fiber Blanket Thermal Insulation for Light Frame Construction and Manufactured Housing", Type I (blankets without membrane facing): consisting of fibers manufactured from slag or rock wool with 6- to 12-lb/cu. ft. density: with maximum flame-spread and smoke-developed indexes of 25 and 50 respectively; passing ASTM E 136 "Test method for Behavior of Materials in a Vertical Tube Furnace at 750 degreesC", for combustion characteristics.
   a. Fire Rated Doors: Provide insulation that provides fire protection and/or temperature rise ratings as indicated.

G. Bituminous Coating: Cold-applied asphalt mastic, SSPC-Paint 12, compounded for 15-mil dry film thickness per coat. Provide inert-type non-corrosive compound free of asbestos fibers, sulfur components, and other deleterious impurities.

H. Sealants: Comply with Specification Section – SEALANTS.
1. Sealants shall be compatible with glazing and frames.

2.3 MANUFACTURED UNITS

A. General:
1. Exterior Doors, Panels, and Frames: In accordance with NAAMM-HMMA Standard 862, "Guide Specifications for Commercial Security Hollow Metal Doors and Frames", Class IV Door in accordance with NILECJ-STD-0306.00.
2. Interior Doors, Panels and Frames: In accordance with NAAMM-HMMA 861 Standard, "Guide Specifications for Commercial Hollow Metal Doors and Frames", unless otherwise indicated in the Contract Documents.
3. Temperature Rise Fire-Rated Framing System: In accordance with specified Manufacturer's product system. TECHNICAL GLASS PRODUCTS' "Fire Frames Heat Barrier Series".

B. Doors:
1. Design shall be custom seamless hollow construction in the flush type variations as indicated.
   a. Thickness1-3/4 inch,
2. Face Sheets:
   a. Exterior Doors shall be fabricated from Metallic-Coated Steel Sheets with zinc-iron-alloy (galvannealed) coating designation.
      1) Exterior Doors 14 gage minimum.
   b. Interior Doors shall be fabricated from Cold-Rolled Steel Sheets.
      1) Interior Doors 18 gage minimum.
3. Core:
   a. Steel Stiffened with continuous vertical formed steel sections fabricated from same materials as face sheets.
      1) Exterior Door 18 gage minimum.
      2) Interior Door 22 gage minimum.
   b. Spaces between stiffeners shall be insulated the full height of the door.
4. Top and Bottom Edges:
   a. Close with continuous recessed and flush filler channels fabricated from same material as face sheets.
      1) Exterior Door 12 gage minimum.
      2) Interior Door 16 gage minimum.
   b. All doors shall have an additional flush filler channel at top and flush filler channel at bottom edges, unless recess channel at bottom is required for hardware.
   c. All channels shall be fabricated from same material as face sheets.
5. Jamb Edges:
   a. Reinforce with continuous "U" channels fabricated from same material as face sheets.
      1) Exterior Door 12 gage minimum.
      2) Interior Door 16 gage minimum.
   b. All channels shall be galvanized at exterior doors.
   c. Astragals shall be fabricated from same material as face sheets. 14-gage minimum.
6. Hardware Reinforcements:
   a. Exterior Doors: Reinforcing Plates shall be fabricated from the same material as the face sheets in the minimum thickness as follows:
      1) Hinges and Pivots 1/4" plate.
      2) Continuous hinges 14-gage.
      3) Mortise Hardware 7-gage.
      4) Locks, Exit Devices, Flush Bolts, Concealed Holders, Concealed Hardware or Surface-Mounted Closures 12-gage.
      5) Pull Plates, Bars and all other Surface-Mounted Hardware 12-gage.
   b. Interior Doors: Reinforcing Plates shall be fabricated from the same material as the face sheets in the minimum thickness as follows:
      1) Hinges and Pivots 7-gage.
      2) Continuous Hinges14-gage.
      3) Mortise Hardware 10-gage.
      4) Locks, Exit Devices, Flush Bolts, Concealed Holders, Concealed Hardware or Surface-Mounted Closures 12-gage.
      5) Pull Plates, Bars and all other Surface-Mounted Hardware 16-gage.
7. Glazing Moldings and Stops:

a. Fabricate from the same material as the door face sheets.
   1) Exterior Doors 16-gage minimum.
   2) Interior Doors 20-gage minimum.

8. Door Louvers: In accordance with NAAMM-HMMA Standard 810 "Hollow Metal Doors" and fabricate from the same material as the door face sheets.
   a. Fire-Rated Doors:
      1) Movable vanes closed by actuation fusible link and listed and labeled for use in fire-rated door assemblies of type and fire-resistance rating indicated.
   b. Non-Rated Doors:
      1) Provide sightproof louver of stationary vanes of inverted "Y" Type blade construction with a 30 percent free area, unless noted otherwise.
   c. Exterior Doors:
      1) Internal Channels 12-gage minimum.
      2) Vanes 12-gage minimum.
         a) Reinforcement 0.25inch x 1.5 inch minimum.
      3) Insect Screens, exterior 12-gage minimum.
      4) Vandal Resistant Screen/Security Grille
         a) 12-gage minimum, 0.25" min, 2" x 2" openings.
         b) Welded to exterior side of door louver.
   d. Interior Doors:
      1) Internal Channels 16-gage minimum.
      2) Vanes 18-gage minimum.
         a) Reinforcement 0.25inch x 1.5 inch minimum.

C. Panels:
   1. Metal Panels shall be made of the same materials, construction and finishes complying with all requirements for Metal Doors.
   2. Attachment:
      a. Attach securely to frame with concealed anchorage and machine screws.
      b. Attachment including screws shall be fully concealed when door is closed.

D. Frames:
   1. Design shall be custom seamless hollow construction in the variety of configurations as indicated.
   2. Exterior Frames shall be fabricated from Metallic-Coated Steel Sheets with zinc-iron-alloy (galvannealed) coating designation.
      a. All Opening sizes 12-gage minimum.
   3. Interior Frames shall be fabricated from Cold-Rolled Steel Sheets.
      a. Openings 4'-0" or less 16-gage minimum.
      b. Openings greater than 4'-0" 14-gage minimum.
   4. Glazing Stops shall be fabricate from the same material as Frames.
      a. Exterior Frames 16-gage minimum.
      b. Interior Frames 20-gage minimum.
   5. Internal Frame Stiffeners shall be fabricated from the same material as Frames.
      a. Head of Frames 12-gage.
   6. Internal Reinforcing Tabs shall be fabricate from the same material and gage thickness as Frame.
   7. Hardware Reinforcements:
      a. Exterior Frames: Reinforcing Plates shall be fabricated from the same material as the Frame in the minimum thickness as follows:
         1) Hinges and Pivots 1/4" plate full width of frame x 10".

2) Continuous Hinges 14-gage full width of frame x entire frame length.
3) Strike Hardware 7-gage.
4) Flush Bolts 7-gage.
5) Closers 7-gage.
6) Surface-Mounted Hardware 7-gage.
7) Hold-Open Arms 7-gage.
8) Surface Panic Devices 7-gage.

b. Interior Frames: Reinforcing Plates shall be fabricated from the same material as the Frame in the minimum thickness as follows:
1) Hinges and Pivots 7-gage full width of frame x 10".
2) Continuous Hinges 14-gage full width of frame x entire frame length.
3) Strike Hardware 12-gage.
4) Flush Bolts 12-gage.
5) Closers 12-gage.
6) Surface-Mounted Hardware 12-gage.
7) Hold-Open Arms 12-gage.
8) Surface Panic Devices 12-gage.

8. Grout Guards: Grout Guards shall be fabricated from the same material as the Frame in minimum 22-gage thickness.

E. Frame Anchors:
1. Exterior Frames: Frame Anchors shall be fabricated from Metallic-Coated Steel Sheets, unless indicated otherwise.
a. Masonry Wall not less that 2" wide x 10" long Anchors.
1) Non Grouted Frames 14 gage T-Strap Anchors.
2) Grouted Frames 14-gage perforated Adjustable Strap & Stirrup Anchors.
a) Wire Loop Anchors of 0.156" diameter steel wire may be used at non-fire-rated frames that are fully grouted.
b. Concrete Walls 14-gage Pour In Place Anchors.
c. Stud Frame Walls 16-gage Combination Wood/Steel Stud Anchors.
1) Anchor shall be not less than 2" wide x 10" long.
d. Jamb Base 14-gage Fixed Floor Anchors.
e. Floor Base 14-gage Existing Wall Anchors.
1) Where indicated 14 gage continuous Rough Buck Anchors.
f. Prepared Openings 14-gage Existing Wall Anchors.
1) Where indicated 14 gage continuous Rough Buck Anchors.
2. Interior Frames: Frame Anchors shall be fabricated from Cold-Rolled Steel Sheets or Hot-Rolled Steel Sheets, unless indicated otherwise.
a. Masonry Wall not less that 2" wide x 10" long Anchors.
1) Non Grouted Frames 16 gage T-Strap Anchors.
2) Grouted Frames 16 gage perforated Adjustable Strap & Stirrup Anchors.
a) Wire Loop Anchors of 0.156" diameter steel wire may be used at non-fire-rated frames that are fully grouted.
b. Concrete Walls 16 gage Pour In Place Anchors.
c. Wood Stud Frame Walls 18 gage Wood Stud Anchors.
1) Anchor shall be not less than 2" wide x 10” long.
d. Metal Stud Frame Walls 18-gage Metal Channel Stud Anchors.
e. Jamb Base 14-gage Fixed or Adjustable Floor Anchors.
f. Floor Base 16 gage Existing Wall Anchors.
1) Where indicated 16 gage Fixed Mullion Anchors.
g. Prepared Openings 16-gage Existing Wall Anchors.

1) Where indicated 16 gage continuous Rough Buck Anchors.

F. Temperature Rise Fire Rated Framing System:
1. Door Hardware:

G. Fasteners:
1. Screws, bolts, washers, shields, spacers and other similar fastening devices:
a. Provide stainless steel vandal resistant screws when outside exterior face glass stops are indicated.
b. Furnish and install as required by frame installer.
c. Provide Stainless Steel fasteners at Stainless Steel Frames.

2.4 FABRICATION

A. Shop Assembly:
1. General:
a. Fabricate in accordance NAAMM-HMMA Standard 810 "Hollow Metal Doors" and NAAMM-HMMA Standard 820 "Hollow Metal Frames", and NAAM-HMMA Standard 850 "Fire-Rated Hollow Metal Doors and Frames".
b. Fabricate to the required size and profiles by accurately forming, welding edges straight, sharp and true. Corner bends shall be true and straight and of minimum radius for the gage of metal used.
c. All finish work shall be strong, rigid and neat in appearance with corners, hairline joints and surfaces free from warp, wave, buckle, tool marks, surface imperfections or other defects.
d. Welding to conform to applicable standards of AWS for high grade finished metal fabrication. All exposed welds shall be ground, filled and dressed smooth with no voids, tool marks, surface imperfections or ridges showing to make them invisible and provide a smooth flush surface.
e. Assemblies shall be shop fabricated and permanently assembled before shipment.
1) Where shipping limitations so dictate, frames for large openings shall be fabricated and prepared in section designated for assembly in the field and clearly identified.
2. Metal Door Fabrication:
a. General: All doors shall be of the types and sizes required and shall be fully welded seamless construction with smooth surfaces without visible joints of seams on exposed faces or edges.
1) Glazed Lites shall be factory cut openings in doors.
2) Provide weep-hole openings in the bottom of exterior doors to permit the escape of entrapped moisture.
b. Face Sheets: Door faces shall be joined at their vertical edges by a continuous weld extending the full height of the door.
c. Core: Stiffeners shall extending full-door height and spanning the full thickness of the interior space between door faces.
1) Space Stiffeners no more than 6" apart and securely attached to both face sheets by spot welds spaced a maximum of 5" o.c..
2) Solidly pack cavities the entire height of door with mineral-fiber insulation.
a) Fire Door Cores: As required to provide fire-protection and temperature-rise ratings as indicated.
d. Top and Bottom Edges: Closing Channels shall extend the full width of the door at top and bottom edges.

1) All doors shall have recessed Closing Channels, spot welded to both faces. When left exposed, fill all gaps with epoxy sealer and filler, sand smooth with no tool marks or surface imperfections.
2) All doors shall have flush-filler Closing Channels in addition to recessed Closing Channels. Channels shall be continuously welded and ground smooth with no marks at all doors.
   a) Flush-filler Closing Channel shall be omitted at bottom edge when recess channel is required for hardware.

e. Jamb Edges: Reinforcing Channels shall extend the full height of the door.
1) Edge profiles shall be provided on both vertical edges of doors as follows:
   a) Single-Acting Swing Doors beveled 1/8" in 2".
   b) Double-Acting Swing Doors rounded on 2-1/8" radius.
2) Astragal: Flat x 1-1/2 inch, continuous welded to panel, ground smooth with no tool marks or surface imperfections. Extend minimum 3/4 inch beyond edge of door on which astragal is mounted.
   a) Provide overlapping astragal on one leaf of pairs of doors where required for fire-performance rating or where indicated.
   b) At exterior doors, provide overlapping astragal at strike. Cope astragal around strike plate.

f. Hardware Reinforcements: Doors shall be mortised, reinforced, drilled and tapped at the factory for fully templated hardware only, in accordance with the approved hardware schedule and templates provided by the hardware contractor.
1) Where surface-mounted hardware is to be applied, doors shall have reinforcing plates only under the face of door.

g. Glazing Moldings and Stops: Provide glazing moldings and stops to secure glazing material and louvers. Moldings and stops shall be flush with face sheets of door. Use the same trim profile on all Fire-Rated and Non Fire-Rated Openings.
1) Fixed Glazing Moldings shall be securely welded to both face sheets of door.
2) Removable Glazing Stops shall be channel shaped and have mitered hairline corner joints. Drill and dimple stop for countersinking and concealment of fasteners spaces equally at 9" o.c. maximum and a maximum of 2" from ends. Snap-on attachments will not be permitted.
3) Metal surfaces underneath the glazing stops and the inside of the glazing stops shall be treated for maximum paint adhesion and painted with a with a rust inhibitive primer prior to installation in the door.
4) Coordinate depth and rabbet width between fixed and removable stops with type of glazing and type of installation indicated.

h. Louvers: Flush opening with all welded construction.
1) Internal channels securely welded to the inside of both face sheets of door.
2) Provide vertical reinforcement at midpoint when louver width exceeds 18" inches.

3. Metal Panel Fabrication: Comply with all requirements for Metal Doors.
a. Attach securely to frame with concealed anchorage and machine screws.
1) Attachment, including screws, shall be fully concealed when door is closed.

4. Metal Frame Fabrication:
a. General: All frames shall be welded units of the sizes and profiles indicated and shall be of seamless hollow construction with smooth surfaces without visible joints of seams on exposed faces or edges.

1) Metal Frame Spreaders shall be temporarily attached at bottom of all open frames for shipping and storage.

b. Frame Sections: All frames are to be rolled and brake formed with integral nailing flanges, back bends, faces, rabbits, stops, and soffits, unless indicated otherwise.
   1) Provide 3 ½ inch wide integral Nailing Flanges at exterior frames. The flange shall be continuous all around the frame at head, jambs and wall sills without gaps at the corner joints. Coordinate flange length with height of concrete curb.
   2) Punch and Dimple frames at attachment points for countersinking and concealment of all through the frame anchorage fasteners.

c. Frame Joints:
   1) Perimeter Corners: Head, Jamb and Wall Sills Members shall be saw-mitered and fully (continuously) welded along entire joint from the throat or the unexposed side at Flanges, Returns, Faces, Rabbet, Stops, and Soffits.
   2) Perimeter Butts: Entire joint shall be fully (continuously) welded along entire joint at Flanges, Returns, Faces, Rabbet, Stops, and Soffits from the throat or the unexposed side of the frame.
      a) Interior Frames: Continuously weld only the Faces. Rabbits, Stops and Soffits shall to be tightly fitted and appear as a hairline seams.
      b) Vertical Mullions members shall extend through Floor Sill Members to floor. Floor Sill Members Stops are to be notched.
   3) Internal Flush and Indented Butts: Vertical Mullions Members shall be continuous, butt to Head and Sill Members and extend through Horizontal Rail Members. Vertical Mullion Stops are to be notched at Head and Sill Members and the Horizontal Rail Stops are to be notched to Vertical Member. Continuously weld only the Faces.
      a) Exterior Frames: Body Putty continuously along entire joint at returns, rabbets, stops, and soffits creating a water tight joint. Sand flush and smooth with no voids or ridges.
      b) Interior Frames: Rabbits, Stops and Soffits shall to be tightly fitted and appear as a hairline seams.

d. Alignment and Reinforcing Tabs: Provide internal alignment and reinforcing tabs at each joint of field splices with a minimum overlap of 2".

e. Internal Frame Stiffeners: Provide additional continuous steel "U" Channel extending the full width of frame and shall be factory welded into head of frame.
   1) Grouted Frames with openings greater than 4'-0" width.
   2) Frames with openings greater than 12'-0" in width.

f. Hardware Reinforcements: Frame shall be mortised, reinforced, drilled and tapped at the factory for fully templated hardware only, in accordance with the approved hardware schedule and templates provided by the hardware contractor.
   1) Where surface-mounted hardware is to be applied, frames shall have reinforcing plates only under face of frame.

g. Grout Guards: Provide at all hardware preparations, tapped mounting holes, glazing stop screws, silencers, and electrical box preparations on frames that are to be grouted.
   1) Weld guards to inside of frame at throat.

h. Glazing Stops: Provide channel shaped removable Glazing Stops to secure glazing material or panels. Glazing Stops shall be continuous and have butted hairline corner joints.

1) Coordinate stop depth and rabbit width between fixed and removable stops with type of glazing and type of installation indicated.
   a) Stop Depth 5/8" depth minimum.
2) Drill and Dimple stops for countersinking and concealment of fasteners uniformly spaced at 9 inches o.c. maximum and not more that 2 inches maximum from each corner.
3) Metal surfaces underneath the glazing stops and the inside of the glazing stops shall be treated for maximum paint adhesion and painted with a with a rust inhibitive primer prior to installation in the door.

5. Frame Anchors:
   a. All Frame Anchors shall be securely welded to the throat at inside of frames.
   b. Frame Anchor Spacing: All Frame Anchors at head, jamb and sill shall be placed a maximum of 8" from frame corners, and ends, with the remainder of the anchors to be equally spaced, not to exceed a maximum of 24" o.c. for all walls types unless indicated otherwise.
      1) Masonry Walls: The spacing of anchors shall be equally spaced, not to exceed a maximum of 24" o.c.. Total number of anchors provided on each jamb shall be not less than the following:
         a) Frames up to 7'-6" height 4 anchors.
         b) Frames 7'-6" to 8'-0" height 5 anchors.
         c) Frames over 8'-0" height provide five (5) anchors plus one (1) additional anchor for each 2' -0" or fraction thereof in height over 8'-0".
      2) Stud Framed Walls: The spacing of anchors shall be equal spaced, not to exceed a maximum of 18" o.c.. Total number of anchors provided on each jamb shall be not less than the following:
         a) Frames up to 4'-0" height 4 anchors.
         b) Frames 4'-0" to 7'-6" high 5 anchors.
         c) Frames 7'-6" to 8'-0" height 6 anchors.
         d) Frames over 8'-0" height provide six (6) anchors plus one (1) additional anchor for each 2'-0" or fraction thereof in height over 8'-0".
      3) Jamb Base: Provide floor anchors for each jamb and mullion that extends to floor.
         a) When conditions do not permit the use of a floor anchor, an additional jamb anchor shall be substituted at a location not to exceed 8" from the base of the jamb.
      4) Floor Base: When conditions do not permit the use of Existing Wall Anchors at floor sill members, provide continuous rough buck for frame anchorage.
6. Rubber Door Silencers: Except on weather/sound strip or fire gasket doors, drill stops to receive door silencers as follows. Keep holes clear during construction.
   a. Single Swing Door Frames Provide and install three (3) at strike jamb.
   b. Double Swing Door Frames Provide and install four (4) at head.

B. Temperature Rise Rated Framing System Fabrication:

C. Fabrication Tolerances:
   1. General: Clearances and Tolerances shall be in accordance with NAAMM-HMMA Standard 862 for Exterior Assemblies and NAAMM-HMMA Standard 861 for Interior Assemblies.

2.5 FINISHES

A. Shop Priming:
1. After fabrication, all tool marks and surface imperfections shall be dressed, filled and sanded as required to make all faces and vertical edges smooth, level and free of all irregularities.
2. Clean and chemically treat (phosphatize) the metal to insure maximum paint adhesion in preparation for primer paint.
3. Apply rust-inhibitive primer paint to all surfaces, minimum dry thickness of 0.7 mils. Manufacturer to provide primer for prolonged exposure that are compatible with substrate and field-applied coatings.
   a. Coordinate primer used with field-applied paint finishes that are indicated and specified.
   b. Shop Primer shall not be considered as a substitution for any primer required as part of the field-applied paint finishes.
   c. Rust-inhibitive primer shall be fully cured before packaging and shipment.

PART 3 - EXECUTION

3.1 EXAMINATION

A. Site Verification of Conditions:
1. Prior to the installation of the work under this specification section, examine substrates, areas, and conditions, with Installer present, for compliance with requirements for installation tolerances and other conditions affecting performance of work under this specification section.
   a. Temperature Rise Rated Framing System:
2. Examine roughing-in for embedded and built-in anchors to verify actual locations before frame installation.
3. Report conditions detrimental to performance of the work under this specification section. Proceed with installation only after unsatisfactory conditions have been corrected.
4. Installation of work under this specification section shall constitute acceptance of existing conditions.

3.2 PREPARATION

A. Protection:
1. Protect all adjacent surfaces from damage from work under this specification section.

B. Surface preparation:
1. Remove welded-in shipping spreaders installed at factory. Restore exposed finish by grinding, filling and dressing, as required to repair area smooth, flush and invisible on exposed faces.

2. Prior to installation, All frames with temporary spreaders removed, shall be checked for size, and swing, and corrected to installation tolerance for squareness, alignment, twist and plumbness. Securely brace frames and maintain installation tolerances within the following limits.
   a. Opening Width: Plus 1/16 inch, minus 1/32 inch, measured from rabbet to rabbet at top, middle and bottom of frame.
   b. Opening Height: Plus 1/16 inch, minus 1/32 inch, measured measured vertically between the frame head rabbet and top of floor or bottom of frame minus jamb extension at each jamb and cross the head.
   c. Squareness: Plus or minus 1/16 inch, measured at door rabbet on a line 90 degrees from jamb perpendicular to frame head.
   d. Alignment: Plus or minus 1/16 inch, measured at jambs on a horizontal line parallel to plane of wall.
   e. Twist: Plus or minus 1/16 inch, measured at opposite face corners of jambs on parallel lines and perpendicular to plane of wall.
   f. Plumbness: Plus or minus 1/16 inch, measured at jambs on a perpendicular line from head to floor.
3. Drill and tap doors and frames to receive non-templated, mortised, and surface-mounted door hardware.

3.3 INSTALLATION

A. General:
   1. Install metal doors, panels and frames plumb, rigid, properly aligned and securely fastened in place; comply with NAAMM-HMMA Standard 840, "Installation and Storage of Hollow Metal Doors and Frames".
   2. Install in accordance with manufacturer's instructions and recommendations unless specifically noted otherwise.
   3. Install Fire-Rated and Smoke-Control Assemblies in accordance with NFPA 80 "Standard for Fire Doors and Other Opening Protectives" and NFPA 105 "Standard for the Installation of Smoke Door Assemblies and Other Openings".

B. Frames:
   1. Set frames accurately in position, plumbed, aligned, and temporarily braced secure, until permanent anchors are set. After wall construction is complete, remove temporary braces, leaving surfaces smooth and undamaged.
      a. Check plumbness, squareness, and twist of frames as walls are constructed. Shim as necessary to comply with installation tolerances.
      b. Where frames are fabricated in sections because of shipping or handling limitations, field splice at approved locations by welding face joint continuously; grind, fill, dress, and make splice smooth, flush, and invisible on exposed faces.
         1) At exterior frames, Body Putty smooth entire joint continuously along returns, rabbets, stops, and soffits creating a watertight joint. Sand flush with no voids or ridges.
   2. Solidly pack mineral-fiber insulation within the throat of all non-grouted exterior and interior frames for the full depth, width and length of frame.
      a. Provide insulation as required to provide fire-protection and temperature-rise ratings as indicated at Fire Rated Assemblies.
   3. Jamb Base: Secure in place frame anchors to floor with post-installed expansion anchors.

4. Floor Base: Secure frames in place with post-installed expansion anchors to floor. Countersink fasteners, fill with body putty, sand smooth and flush with no voids or ridges. Conceal installed fasteners as to be invisible at exposed faces.
5. Masonry and Concrete Walls: Coordinate installation of frames to allow the solidly fill the space between frames and masonry or concrete with grout. Take precautions, grout in lifts and brace frames, to ensure that frames are not deformed or damaged by grout forces.
   a. Field apply bituminous coating to backs of all frames that are filled with grout.
   b. Install door silencers in frames before grouting.
6. In-Place Concrete or Masonry Construction: Secure frames in place with post-installed expansion anchors. Countersink fasteners, fill with body putty, sand smooth and flush with no voids or ridges. Conceal installed fasteners as to be invisible at exposed faces.
7. Stud Frame Walls: Secure frames in place with screw fasteners at frame anchors to wall framing.
8. In-Place Stud Frame Walls: Secure frames in place with screw fasteners at frame anchors to wall framing. Countersink fasteners, fill with body putty, sand smooth and flush with no voids or ridges. Conceal installed fasteners as to be invisible at exposed faces.
9. Frame and Wall Joints: Provide joint sealants to maintain watertight and airtight continuous seals that aesthetically join dissimilar materials without causing staining or deterioration of joint substrates. Application of sealants shall be in strict compliance with manufacturer's instructions.
   a. Provide integral color sealants at exterior joints and paintable sealants at interior joints.
   b. Clean out joint between frames and masonry or concrete to a depth of 3/4 inch. Fill with rod and sealants.
10. Field-apply compatible and paintable sealant at all frame joints that are exposed to the exterior for the full depth of the frame at returns, rabbits, stops and soffits.

C. Doors: Fit doors accurately in frames, within clearances specified below. Shim as necessary.
1. Non-Fire-Rated Doors:
   a. Between door and frame at jambs and head 3/16 inch maximum.
   b. Between edges of pairs of doors 3/16 inch maximum.
   c. Door Sill Clearances: Coordinate with threshold conditions and floor materials.
      1) Between bottom of door and top of threshold 3/8 inch maximum.
      2) Between bottom of door and floor with no threshold 3/4 inch maximum.
2. Fire-Rated and Smoke-Control Doors: Install doors with clearances according to NFPA 80 "Standard for Fire Doors and Other Opening Protectives" and NFPA 105 "Standard for the Installation of Smoke Door Assemblies and Other Openings".
   a. Between bottom of door and floor covering surface 1/2 inch maximum.

D. Glazing Stops:
1. Coordinate and comply with installation requirements for all glazing indicated and specified.
2. Secure Glazing Stops to frames and doors with corrosion resistant countersunk flat or oval-head machine screws.
   a. All exterior screws (head, jamb and sills) shall be attached with a bed of sealant at the penetration point into the frame for a positive seal against water intrusion.
   b. Countersink fasteners, fill with body putty, sand smooth and flush with no voids or ridges. Conceal installed fasteners as to be invisible at exposed faces.

3. All exterior stops shall receive a full bed of sealant at back channel leg for the full length of opening, during final glazing installation for positive seal against water intrusion.
   a. Coordinate sealants with the requirements of the glazing specified.

E. Temperature Rise Rated Framing System:

3.4 FIELD QUALITY CONTROL

A. Site Tests:
1. As required by Regulatory Requirements.
2. Mock-Up Assemblies:
   a. Water Spray Test: Upon completion of the installation of the Mock-Up Assembly, conduct test for water penetration in according to AAMA 501.2 requirements.
      1) The Project Inspector, the Architect, Contractor's Superintendent and Sub-contactor's Superintendent shall visually inspect for water penetration.
      2) A Thermal Imagining process conducted by a Owner's Testing Laboratory Service, shall be used for additional inspection for water penetration.
      3) Cost of additional testing and inspection required due to failure for water tightness shall be borne by the Contractor.
   b. Reports:
      1) Project Inspector and/or Owner's Testing Laboratory Services shall provide a written report noting the installation and water tightness of the Mock-Up Assemblies tested.

B. Inspection:
1. Notification: Schedule all inspections. Notify the Architect, Project Inspector and any regulatory agencies of the time at least 48 hours prior to the inspection.
2. Regulatory Requirements: No work shall be excepted without the required inspections being performed.

3.5 ADJUSTING

A. Check and readjust operating hardware items immediately before final inspection. Leave work in complete and proper operation condition. Coordinate with hardware suppliers for function and use.

B. Remove and replace defective work, including work that is warped, bowed, or other wise unacceptable.

3.6 CLEANING

A. Clean in accordance with Specification Section - TEMPORARY FACILITIES AND CONTROLS.
1. Immediately clean all adjacent surfaces from all foreign materials.
2. Immediately remove grout, sealants and any foreign materials from bonding to metal doors and frames.
3. In accordance with manufacturer's instructions and recommendations.

B. Metal Doors, Panels, and Frames finishes shall be clean and ready of application of any additional finishes after installation.
   1. Prime-Coat Surfaces: Immediately after erection, sand smooth rusted or damaged areas of prime coat and apply touchup of compatible air-drying, rust-inhibitive primer.
   2. Metallic-Coated Surfaces: Clean abraded areas and repair with galvanizing repair paint according to manufacturer’s written instructions.
   3. Stainless Steel Surfaces: Scratched and marred surfaces (including field welding) shall be cleaned and promptly be finished smooth. Refinish to match original finish.

C. Temperature Rise Rated Framing System: Limit repair and touch-up to minor repair of small scratches. Use only manufacturer's recommended products.

3.7 PROTECTION

A. Protect and maintain conditions that ensures the work is without damage or deterioration until the time of Completion has been executed.
   1. Maintain in a manner acceptable to manufacturer's and installer's warranty.

END OF SECTION

SECTION 081416 – WOOD DOORS

PART 1 - GENERAL

1.1 SUMMARY

A. This Section includes the following:
   1. Provide all material, labor, equipment and services necessary to completely install all wood door materials, accessories and other related items necessary to complete the Project as indicated by the Contract Documents.

B. Related Sections: The following Project Manual Sections contain requirements that relate to this section:
   1. ALL DIVISION 00 SPECIFICATION SECTIONS.
   2. ALL DIVISION 01 SPECIFICATION SECTIONS.
   3. 04 22 00 CONCRETE MASONRY UNITS
   4. 05 12 00 STEEL AND FABRICATIONS
   5. 07 60 00 SHEET METAL
   6. 07 92 00 SEALANTS
   7. 08 11 00 METAL DOORS AND FRAMES
   8. 08 80 00 GLASS
   9. 09 24 00 CEMENT PLASTER
   10. 09 29 00 GYPSUM BOARD
   11. 09 91 00 PAINTING
   12. 10 14 00 IDENTIFYING DEVICES
   13. ALL SPECIFICATION SECTIONS IN THE FACILITY SERVICES SUBGROUP.
   14. ALL SPECIFICATION SECTIONS IN THE SITE AND INFRASTRUCTURE SUBGROUP.

1.2 REFERENCES

A. Standards:
   1. In accordance with the following standards:
      a. AWS "Architectural Woodwork Standards", Latest Edition, including latest amendments, by the Architectural Woodwork Institute, Architectural Woodwork Manufacturers Association of Canada, and the Woodwork Institute.
      b. BHMA Builders Hardware Manufacturers Association, Inc.
      c. CRSC California Referenced Standards Code, CCR, Part 12, Chapter 12-7-4 "FIRE-RESISTIVE STANDARDS - Fire Door Assembly Tests".
      d. NEMA National Electrical Manufacturers Association, LD-3, Latest Edition.
      e. NFPA National Fire Protection Association "Fire Doors and Windows" NFPA No. 80.
      f. UL Underwriter's Laboratories "Fire Tests of Door Assemblies" (UL 10 (b) - 1970).
      g. WDMA Window and Door Manufacturers Association.
      h. WDMA I.S. 1A-04 "Industry Standard for Architectural Wood Flush Doors".
      i. WI Woodwork Institute.

1.3 SUBMITTALS

A. Submit in accordance with Specification Section - SUBMITTAL PROCEDURES:
1. Product Data.
a. Submit manufacturer's literature describing products.
2. Shop Drawings.
a. Submit shop drawings from manufacturer detailing equipment assemblies and indicating dimensions, weights, loading, required clearances, method of field assembly, components, and location and size of each field connection.
b. Submit door type, details and location with reference to Architect's door mark and hardware group.
3. Samples.
a. Provide samples of each door finish, in the species specified for the veneer.
4. Quality Assurance/Control Submittals:
a. Test Reports:
1) Submit four (4) copies of testing laboratory's report indicating any fire labels that may be required.
b. Manufacturer's Written Instructions:
1) Submit three (3) copies of manufacturer's written instructions.
c. Certificates:
1) Submit three (3) copies of certificates.
a) Before delivery to the jobsite, the Wood Door supplier shall issue a WI CERTIFIED COMPLIANCE CERTIFICATE indicating the Wood Door products to be furnished for this project shall meet fully all the requirements of the grade or grades specified.
b) Upon completion of installation, a WI CERTIFIED COMPLIANCE CERTIFICATE shall be furnished for the installation.
c) Submit three (3) copies of a letter on Contractor's Letterhead certifying work provided, meets or exceeds, the requirements of this Section.
5. Closeout Submittals in accordance with the following:
a. Maintenance Data in accordance with Specification Section - PROJECT CLOSEOUT.
b. Warranty in accordance with Specification Section - WARRANTIES.

1.4 QUALITY ASSURANCE

A. Qualifications:
1. Installer Qualifications:
a. Engage an experienced Installer who has successfully completed three (3) projects of similar scope and size to that indicated for this Project.
b. Engage an experienced Installer who is certified in writing by the manufacturer listed herein as qualified to install manufacturer's product (or system) in accordance with manufacturer's warranty requirements.
2. Manufacturer/Supplier Qualifications:
a. Firm experienced in successfully producing/supplying products similar to that indicated for this Project, with sufficient production/supply capacity to produce/supply required units without causing delay in the work.

3. Testing Agency Qualifications:
   a. Testing Agency shall be approved and recognized by enforcing agency and provide inspection of materials and workmanship during fabrication and assembly.

B. Regulatory Requirements:
1. In accordance with Specification Section - REGULATORY REQUIREMENTS, and the following:
   a. CARB Materials and equipment used for this Project shall comply with the current applicable regulations of the California Air Resources Board (CARB) and the Environmental Protection Agency (EPA), in the area where the project is located.

C. Meetings:
1. Pre-Installation: Schedule d by the Contractor prior to the start of work.
   a. Coordinate the work with other work being performed.
   b. Identify any potential problems that may impede planned progress and proper installation of work regarding quality of installation and warranty requirements.
2. Progress: Scheduled by the Contractor during the performance of the work.
   a. Review for proper installation of work progress.
   b. Identify any installation problems and acceptable corrective measures.
   c. Identify any measures to maintain or regain project schedule if necessary.
3. Completion: Scheduled by the Contractor upon proper completion of the work.
   a. Inspect and identify any problems that may impede issuance of warranties or guaranties.
   b. Maintain installed work until the Notice of Substantial Completion has been executed.

1.5 DELIVERY, STORAGE, AND HANDLING

A. Packing, shipping, handling, and unloading:
1. Products shall be individually wrapped.
2. Products shall be handled in such a manner as to assure that they are free from dents, scratches and other damage.

B. Acceptance at Site:
1. Products must be in manufacturer's original unopened containers with labels (including any fire labels) indicating brand name, model, and grade.
2. Damaged products will not be accepted.

C. Storage and protection:
1. Products shall be stored above ground on level platforms, six (6) inches above ground, allowing air circulation under stacked units.
   a. Cover materials with protective waterproof covering providing for adequate air circulation and ventilation.

1.6 PROJECT CONDITIONS

A. Environmental requirements:

1. Temperature: Maintain ambient temperature in space to receive products between sixty (60) degrees Fahrenheit and ninety (90) degrees Fahrenheit for seven (7) days prior, during, and seven (7) days minimum following installation. Inform the Owner of ambient temperature requirements for products installed and maintain until Substantial Completion and turn-over of the building or facility to the Owner.
2. Humidity: Maintain humidity in space to receive products between 25 percent to 55 percent at 60 degrees F to 90 degrees F, and EMU (Equilibrium Moisture Content) conditions between 6 percent to 8 percent for four (4) days minimum prior, during, and following installation in accordance with manufacturer's written recommendations. Inform the Owner of humidity requirements for products installed and maintain until Substantial Completion and turn-over of the building or facility to the Owner.

B. Existing Conditions:
1. Examine site and compare it with the drawings and specifications. Thoroughly investigate and verify conditions under which the work is to be performed. No allowance will be made for extra work resulting from negligence or failure to be acquainted with all available information concerning conditions necessary to estimate the difficulty or cost of the work.
2. Conduct work so as not to interfere unnecessarily with adjacent roads, streets, drives and walks.

1.7 WARRANTY

A. Contractor's General Warranty:
1. In accordance with Specification Section - WARRANTIES.

B. Manufacturer’s Warranty:
1. In accordance with manufacturer's written materials standard warranty:
   a. Warranty Period Life of Installation.
      1) Doors shall be warranted for life of installation against warp or twist in excess of 1/4" in any face including full diagonal.
      2) Replacement shall include finishing of new replacement door, hardware damaged by malfunction of original door, and hanging in satisfactory operating condition.

C. Installer's Warranty:
1. In accordance with the terms of the Specification Section - WARRANTIES:
   a. Warranty period Five (5) years.

PART 2 - PRODUCTS

2.1 MANUFACTURED UNITS

A. Wood Doors:
1. Pre-finished Wood Veneer, 1-3/4" Solid Core, with stain grade wood veneer faced doors, WI Premium Grade.
   a. Standard: Manufactured in accordance with Commercial Standards as amended and recognized by the AWS.
   b. Core:

1) Non-Rated Solid Core Doors:
   a) 5 ply solid stave wood block core.
2) Fire-Rated Solid Core Doors:
   a) Mineral composition core meeting requirements of specified standards.

c. Face Veneers:
   1) AWS Birch , plain sliced, with slip-matched veneer panels faces suitable for transparent finish.
   2) Pairs of doors shall be "Pair Matched".

d. Edges:
   1) Same species of the face, sealed and matched for color with the face veneer.

e. Finish:
   1) Premium Grade, clear System No. 5 (Catalyzed Polyurethane).

f. Glass and Louver Frames:
   1) Molding and trim to be integral construction and flush with face sheet of door.
   2) Glass thickness is specified in Specification Section – GLASS.

B. Hardware:
1. Finish Hardware shall be furnished under Specification Section – HARDWARE.
   a. Coordinate the hardware templates with the Contractor for field fitting and installation into the doors.
2. Doors shall be pre-fit in field and provided with cut outs for hardware according to templates and AWS.

2.2 FABRICATION

A. Shop Assembly:
1. All doors marked for opening numbers shown on the drawings and with protective wrapping.
   a. Doors shall be Type I adhesive doors regardless of exposure.

2.3 FACTORY FINISHING

A. General: Comply with referenced quality standard for factory finishing. Complete fabrication, including fitting doors for openings and machining for hardware that is not surface applied, before finishing.
1. Finish faces, all four edges, edges of cutouts, and mortises. Stains and fillers may be omitted on edges of cutouts, and mortises.

B. Finish doors at factory.

C. Finish doors at factory that are indicated to receive transparent finish.

D. Transparent Stained Finish:
1. Grade: Premium.
2. Staining: As selected by Architect from manufacturer's full range.
   a. Do not stain over fire labels.
3. Finish: WI System No. 5 catalyzed polyurethane.

4. Effect: Semifilled finish, produced by applying an additional finish coat to partially fill the wood pores.
5. Sheen: Satin.

PART 3 - EXECUTION

3.1 EXAMINATION

A. Site verification of conditions:
1. Prior to the execution of the work under this specification section, inspect the installed work executed under other sections of this Project Manual, which affect the execution of work under this specification section.
2. Report unacceptable conditions to the Architect. Do not begin work until unacceptable conditions have been corrected.
3. Execution of work under this specification section shall constitute acceptance of existing conditions.

3.2 PREPARATION

A. Coordination:
1. Coordinate work under this specification section with work specified under other sections to ensure proper and adequate interface of work.
2. Examine opening and hardware schedules to verify proper coordination.

B. Protection:
1. Protect all adjacent surfaces from drips, spray, air pollution of surrounding environment, and other damage from work under this specification section.

C. Surface preparation:
1. Prepare surface in accordance with manufacturer's written instructions and recommendations.
2. Clean substrates of substances (oil, grease, rolling compounds, incompatible primers, loose mill scale, etc.) which could impair bond of materials specified within this section.

3.3 INSTALLATION

A. General:
1. In accordance with manufacturer's written instructions and recommendations unless specifically noted otherwise.
2. In accordance with approved submittals.
3. In accordance with Regulatory Requirements.
4. Set plumb, level, and square.

B. Layout:
1. Lines shall be straight and true.

C. Non-Rated Doors:
1. Clearance at jambs and heads: 1/8-inch.

2. Per leaf clearance at meeting stiles for pairs of doors: 1/16-inch.
3. Clearance from bottom of door to top of decorative floor finish or covering: 1/8-inch.
4. Where threshold is shown or scheduled, provide 1/4-inch clearance from bottom of door to top of threshold.

D. Fire-Rated Doors:
1. Comply with NFPA 80 for fitting clearances for fire-rated doors.
   a. Threshold Clearances: Consistent Undercut.
      1) Door in fire-rated openings shall not be undercut more than is allowed by CRSC, CCR, Part 12, Chapter 12-7-4 "FIRE-RESISTIVE STANDARDS - "Fire Door Assembly Tests".
   b. Conform to the requirements, for assemblies and fire tested in accordance with CRSC, CCR, Part 12, Chapter 12-7-4 "FIRE-RESISTIVE STANDARDS - Fire Door Assembly Tests".
      1) All 20 minute rated assemblies shall be provided with approved gasketing material so installed as to provide a seal where the door meets the stop on both sides and across the top.
      2) All rated doors are to be positive latching and self-closing.
   c. Continuous Hinges shall not obscure rating of doors and frames.

E. Install all finish hardware in strict accordance with the manufacturers written recommendations, eliminating all hinge-bound conditions and making all items smoothly operating and firmly anchored into position.

3.4 REPAIR / RESTORATION

A. Defective Work:
1. Replace, rework or otherwise make good as required doors, finish, frames or hardware found broken, damaged, disfigured or defaced.
2. Incomplete, misaligned, or incorrectly located products will not be accepted.

3.5 CLEANING

A. Clean in accordance with Specification Section - PROJECT CLOSEOUT.
1. Clean any soiled surfaces immediately.
2. Finish shall be clean and ready for the application of any additional finishes.
3. In accordance with manufacturer's written instructions and recommendations.

3.6 PROTECTION

A. Protection from traffic:
1. Provide final protection and maintain conditions, in a manner acceptable to manufacturer and installer, which ensures the work of this section being without damage or deterioration until the time of Completion.

END OF SECTION

INTENTIONALLY LEFT BLANK

SECTION 083113 – ACCESS DOORS AND FRAMES

PART 1 - GENERAL

1.1 SUMMARY

A. This Section includes the following:
   1. Provide all materials, labor, equipment and services necessary to furnish and install Equipment Access Doors, accessories and other related items necessary to complete Project as indicated by the Contract Documents unless specifically excluded.

B. Related Sections: The following Sections contain requirements that relate to this Section:
   1. ALL DIVISION 00 SPECIFICATION SECTIONS.
   2. ALL DIVISION 01 SPECIFICATION SECTIONS.
   3. 06 10 00 ROUGH CARPENTRY
   4. 08 11 00 METAL DOORS AND FRAMES
   5. 09 24 00 CEMENT PLASTER
   6. 09 29 00 GYPSUM BOARD
   7. 09 30 00 TILE
   8. 09 91 00 PAINTING
   9. ALL SPECIFICATION SECTIONS IN THE FACILITY SERVICES SUBGROUP.
   10. ALL SPECIFICATION SECTIONS IN THE SITE AND INFRASTRUCTURE SUBGROUP.

1.2 SUBMITTALS

A. Submit in accordance with Specification Section - SUBMITTAL PROCEDURES:
   1. Product Data.
      a. Include construction details, material descriptions, fabrication methods, dimensions of individual components and profiles, hardware, finishes, and operating instructions.
      b. Submit manufacturer’s standard color range for selection by the Architect.
   2. Shop Drawings.
      a. Submit shop drawings from manufacturer detailing equipment assemblies and indicating dimensions, weights, loading, required clearances, method of field assembly, components, and location and size of each field connection.
   3. Closeout Submittals in accordance with Specification Sections in Division One:
      a. Maintenance Data in accordance with Specification Section - PROJECT CLOSEOUT.
      b. Operation Data in accordance with Specification Section - PROJECT CLOSEOUT.
      c. Project Record Documents in accordance with Specification Section - PROJECT DOCUMENTS.
      d. Warranty in accordance with Specification Section - WARRANTIES.

1.3 QUALITY ASSURANCE

A. Qualifications:

1. Installer Qualifications:
   a. Engage an experienced Installer who has successfully completed three (3) projects of similar scope and size to that indicated for this Project.
   b. Engage an experienced Installer who is certified in writing by the manufacturer listed herein as qualified to install manufacturer's product (or system) in accordance with manufacturer's warranty requirements.
2. Manufacturer/Supplier Qualifications:
   a. Firm experienced in successfully producing/supplying products similar to that indicated for this Project, with sufficient production/supply capacity to produce/supply required units without causing delay in the work.

B. Regulatory Requirements:
1. In accordance with Specification Section - REGULATORY REQUIREMENTS, and the following:
   a. CARB Materials and equipment used for this Project shall comply with the current applicable regulations of the California Air Resources Board (CARB) and the Environmental Protection Agency (EPA), in the area where the project is located.

C. Meetings:
1. Pre-Installation: Scheduled by the Contractor prior to the start of work.
   a. Coordinate the work with other work being performed.
   b. Identify any potential problems that may impede planned progress and proper installation of work regarding quality of installation and warranty requirements.
2. Progress: Scheduled by the Contractor during the performance of the work.
   a. Review for proper installation of work progress.
   b. Identify any installation problems and acceptable corrective measures.
   c. Identify any measures to maintain or regain project schedule if necessary.
3. Completion: Scheduled by the Contractor upon proper completion of the work.
   a. Inspect and identify any problems that may impede issuance of warranties or guaranties.
   b. Maintaining installed work until the Notice of Substantial Completion has been executed.

1.4 WARRANTY

A. Contractor's General Warranty:
1. In accordance with Specification Section - WARRANTIES.

B. Manufacturer’s Warranty:
1. In accordance with manufacturer's written standard warranty:
   a. Warranty Period One (1) Year.

C. Installer's Warranty:
1. In accordance with the terms of the Specification Section - WARRANTIES:
   a. Warranty period One (1) Year.

PART 2 - PRODUCTS

2.1 MANUFACTURERS

A. These products listed herein establish the size, pattern, color range and function selected by the Architect for this Project. Manufacturers that are listed as acceptable alternative manufacturers and substitutions must still comply with the requirements of this project and the products listed in order to be approved as an equivalent during the Submittal Process. If the acceptable alternative manufacturers listed or substitutions are not approved during the Submittal Process due to non-compliance with the contract documents, then the Contractor shall submit product specified.
   1. Specified product manufacturer:
      a. MILCOR INCORPORATED, INC.

B. Products from other manufacturers not listed must submit in accordance with Specification Section - SUBSTITUTION PROCEDURES.

2.2 MATERIALS

A. Access Doors:
   1. Design: Equal to Style AP, DW, AT, K or M Access Door as manufactured by MILCOR INCORPORATED, Lima, Ohio.
      a. Design shall match material conditions present in each specific location.
      b. In Cement Plaster locations, provide not less than 16 gage frames with a minimum of 24 gage expanded or perforated metal wings designed to finish flush with plaster.
   2. Size: Refer to Architectural, Plumbing, Mechanical, and Electrical Drawings.
   3. Material: Steel Frame and Door.
   4. Operation: Manual
   5. Lock: Key operated cylinder lock
   6. Finish: Shop Primed, unless otherwise noted.
      a. In Shower, Toilet, or Locker Rooms all exposed portions shall be brushed stainless steel.
   7. Fire Rating: To match wall or ceiling assembly in which doors are located in accordance with Underwriters Laboratories ratings.
      a. Continuous Hinges shall not obscure rating of doors and frames.

PART 3 - EXECUTION

3.1 PREPARATION

A. Coordination:
   1. Coordinate work under this specification section with work specified under other sections to ensure proper and adequate interface of work.

2. Coordinate access doors with related items specified under other Sections to ensure proper and adequate interface of work. Particular attention is called to all Plumbing, Mechanical, and Electrical Specifications and drawings and the full cooperation required with that subcontractor's needs and work.

3.2 INSTALLATION

A. General:
1. In accordance with manufacturer's written instructions and recommendations unless specifically noted otherwise.
2. In accordance with approved submittals.
3. In accordance with Regulatory Requirements.
4. Set plumb, level, and square.

END OF SECTION

SECTION 087000 – HARDWARE

PART 1 - GENERAL

1.1 SUMMARY

A. This Section includes the following:
   1. Provide all material, labor, equipment and services necessary to completely install all Building Hardware materials, accessories and other related items necessary to complete the Project as indicated by the Contract Documents.
      a. Door Hardware.
      b. Casework cylinders.
      c. Classroom Flagpole Holders.
      d. Safes.
      e. Post-Construction Services.
         1) Adjust hardware 90 days after Notice of Completion.
         2) Warranty review 11 months after Notice of Completion.

B. Work furnished by Contractor and installed by Owner.
   1. Keyed cylinders only.
   2. Padlocks.

C. Related Sections: The following Project Manual Sections contain requirements that relate to this section:
   1. ALL DIVISION 00 SPECIFICATION SECTIONS.
   2. ALL DIVISION 01 SPECIFICATION SECTIONS.
   3. 03 30 00 CAST-IN-PLACE CONCRETE
   4. 05 12 00 STEEL AND FABRICATIONS
   5. 06 10 00 ROUGH CARPENTRY
   6. 06 22 00 MILLWORK
   7. 06 41 23 MODULAR CASEWORK
   8. 07 92 00 SEALANTS
   9. 08 11 00 METAL DOORS AND FRAMES
   10. 08 56 59 SERVICE WINDOWS
   11. 09 91 00 PAINTING
   12. 10 05 00 MISCELLANEOUS SPECIALTIES
   13. 32 19 19 ORNAMENTAL METAL
   14. 32 31 13 CHAIN LINK
   15. ALL SPECIFICATION SECTIONS IN THE FACILITY SERVICES SUBGROUP.
      a. Alarm Systems and Power Interface.
   16. ALL SPECIFICATION SECTIONS IN THE SITE AND INFRASTRUCTURE SUBGROUP.

1.2 SUBSTITUTIONS:

A. The District has established District Standardized Products. Refer to FUSD Resolution 18-08.

B. For products not subject to the District Standardized Products, written approval of District will permit substitutions for materials specified. Refer to Fresno Unified School Districts General Conditions and General Requirements, Substitutions, for procedure.

1.3 REFERENCES

A. Standards:
1. In accordance with the following standards:
   a. ADAAG Americans with Disabilities Act Accessibility Guidelines for Buildings and Facilities.
   b. ASAHC American Society of Architectural Hardware Consultants.
   c. BHMA Builders Hardware Manufacturers Association.
   d. DHI Door and Hardware Institute.
   e. HMMA Hollow Metal Manufacturer’s Association.
   f. NFPA National Fire Protection Association.
   g. UL Underwriter’s Laboratories.
   h. WHI Warnock Hersey Incorporated.

1.4 DEFINITIONS

A. The following definitions apply to this Specification Section:
1. AFF Above Finished Floor.
2. "LABEL" Shall mean "FIRE DOOR ASSEMBLY" as defined in CBC Section 702.
3. LDW Less Door Width.
4. NRP Non Removable Pin.
5. POT Path of Travel (as defined by DSA/ACS and the CBC).

1.5 SUBMITTALS

A. Submit in accordance with Specification Section - SUBMITTAL PROCEDURES:
1. Coordination Drawings:
   a. Submit installer's coordination drawings indicating the work of this section with that of related work of other sections for proper interface of the completed work. Installer shall coordinate and obtain approvals from the work of other related sections prior to submitting to the Architect.
2. Product Data.
   a. Submit manufacturer's technical product data for each item of door hardware, installation instructions, maintenance of operating parts and finish (including any custom colors), and other information necessary to show compliance with requirements.
   b. Provide Key Control System submittal for review prior to fabrication or ordering. Submit manufacturer's full color range (including any standard, premium and custom colors) for selection by the Architect.
   c. Keying Schedule: Submit separate detailed schedule indicating clearly how the Owner's final instructions on keying of locks has been fulfilled
3. Shop Drawings – (Hardware Schedule):

a. Submit shop drawings (Hardware Schedule) showing fabrication and installation of the work of this section including plans, elevations, sections, details of components, and attachments to other units of work. Include the following information:
   1) Type, style, function, size and finish of each Hardware Item.
   2) Name and manufacturer of each item.
   3) Fastenings and other pertinent information.
   4) Location of each hardware set cross-referenced to indications on the drawings both on the floor plans and in door and frame (opening) schedule as prepared by the Architect.
   5) Explanation of all abbreviations, symbols, and codes contained in schedule.
   6) Mounting locations for hardware.
   7) Door and frame sizes and materials.
   8) Keying information.

b. Templates:
   1) Templates for doors, frames, and other work specified to be factory prepared for the installation of door hardware. Check shop drawings of other work to confirm that adequate provisions are made for locating and installing door hardware to comply with indicated requirements.
   2) Furnish templates to other sections as required and in a timely fashion.
   3) Furnish reinforcing units and template hardware to metal frame and door manufacturer for application at factory.

c. Furnish as-built/as-installed schedule with close-out documents, including keying schedule, wiring/riser diagrams, manufacturers' installation, adjustment and maintenance information.

4. Quality Assurance/Control Submittals:
   a. Certificates:
      1) Submit three (3) copies of certificates.
      2) Provide a letter on Contractor's Letterhead certifying work provided, meets or exceeds, the requirements of this Section.
         a) Provide a statement on the certificate that all hardware has been furnished in accordance with the Contract Documents.
         b) Provide a statement on the certificate that all hardware has been installed correctly and in proper working order.

5. Closeout Submittals:
   a. PUNCH LIST CERTIFICATE: Prior to the Contractors request for Final Review, the Contractor and Trade Contractor shall furnish a letter indicating the hardware has been completely installed and has been inspected. The letter shall include in the title "Punch List Certificate", and include the Contractor / Trade Contractor description of the inspections performs and any issues observed and addressed.
   b. Maintenance Data in accordance with Specification Section - PROJECT CLOSEOUT.
   c. Operation Data in accordance with Specification Section - PROJECT CLOSEOUT.
   d. Record Documents in accordance with Specification Section - RECORD DOCUMENTS.
   e. Warranty in accordance with Specification Section - WARRANTIES.

1.6 QUALITY ASSURANCE

A. Qualifications:
   1. Installer Qualifications:

a. Engage an experienced Installer who has successfully completed three (3) projects of similar scope and size to that indicated for this Project.

2. Manufacturer/Supplier Qualifications:
   a. Firm experienced in successfully producing/supplying products similar to that indicated for this Project, with sufficient production/supply capacity to produce/supply required units without causing delay in the work.
   b. Firm must be a recognized architectural door hardware supplier, with warehousing facilities in the Project's vicinity, that has a record of successful in-service performance for supplying door hardware similar in quantity, type, and quality to that indicated for this Project, and that employs an experienced Architectural Hardware Consultant (AHC) who is available to Owner, Architect, and Contractor, at reasonable times during the course of the Work, for consultation.
      1) Responsible for detailing, scheduling and ordering of finish hardware.
      2) Supplier shall meet with the Owner to finalize keying requirements and to obtain final instructions in writing.
      3) Stock parts for products supplied and be capable of repairing and replacing hardware items found defective within warranty periods.

B. Regulatory Requirements:
   1. In accordance with Specification Section - REGULATORY REQUIREMENTS, and the following:
      a. CARB Materials and equipment used for this Project shall comply with the current applicable regulations of the California Air Resources Board (CARB)and the Environmental Protection Agency (EPA), in the area where the project is located.
      b. CBC General Requirements:
         1) New buildings on a K-12 Public School Campus shall be provided with locks which allow doors to classrooms and any room with an occupant load of five or more persons to be locked from the inside per CFC 1010.1.11.
            a) Locks shall conform to the specification and requirements of Section 1010.1.9.
            b) Exceptions include doors which are normally locked from the outside, relocatable moved within the same campus, and reconstruction projects.
            c) California Assembly Bill No. 211.
         2) All rated doors are to be positive latching and self-closing.
         3) All 20 minute rated assemblies shall be provided with approved gasketing material so installed to provide a seal where the door meets the stop on both sides and across the top.
         4) Lever handles shall return to within 1/2 inch off door face.
         5) Hand-activated hardware shall be mounted between 34” to 44” AFF; lever-type hardware, panic bars, push-pull activating and lever for thumb-turn dead bolt hardware shall comply with CBC Section 11B-308 and 11B-404.2.7.
            a) All hand activated hardware shall be easy to operate with one hand, without tight grasping, pinching, or twisting of the wrist to operate.

6) Provide door hardware for fire-rated openings that complies with NFPA Standard No. 80 and requirements of authorities having jurisdiction. Provide only items of door hardware that are listed and tested by UL or Warnock Hersey for given type/size opening and degree of label. Provide proper latching hardware, door closers, approved-bearing hinges and seals whether listed in the Hardware Schedule or not.
   a) Where emergency exit devices are required on fire-rated doors, (with supplementary marking on door's UL labels indicating "Fire Door to be Equipped with Fire Exit Hardware") provide UL label on exit devices indicating "Fire Exit Hardware".
7) Exit Doors: Operable from inside with single motion without the use of a key or special knowledge or effort.
8) Thresholds in the POT shall be in conformance with CBC Section 11B-404.2.5.
9) Effort to operate doors shall be a maximum of 5 lbs at exterior and interior doors per CBC Section 11B-404.2.9.
10) Closer Delay Time shall comply with CBC Section 11B-404.2.8.1.
11) Exit Panic hardware shall comply with CCR Title 24, Part 12, Chapter 12-10-302 (a). The release mechanism shall be so designed that a horizontal force of 15 lbs. or less will actuate the release bar and latches applied in the direction of travel. The device shall bear UL label for fire rated doors.

C. Performance Requirements:
1. MEETINGS
   a. Hold four (4) meetings during the course of Construction.
2. MEETING 1 - PRE-INSTALLATION MEETING.
   a. Scheduled by the Contractor prior to the start of work.
   b. To be held with the Contractor, Trade Contractor(s), Designer and the FUSD Loconnel
   c. Review hardware schedule, products and installation procedures.
   d. Review Owner's keying standards.
   e. Provide a plan for coordinating the work with all other related work.
   f. Identify any potential problems that may impede planned progress and proper installation of work regarding quality of installation and warranty requirements.
   g. Review specific FUSD hardware requirements.
   h. Review schedule for FUSD to deliver FUSD supplied components.
3. MEETING 2 - 10% PROGRESS MEETING:
   a. Scheduled by the Contactor at 10% of the performance of the work.
   b. To be held with the Contractor, Trade Contractor(s) and the FUSD Lock Personnel.
   c. Contractor to notify FUSD Project Manager and FUSD Lock Personnel at (559) 457-3331
   d. FUSD Lock Personnel will examine all installed hardware for proper function and installation.
   e. Scheduled by the Contractor during the performance of the work.
   f. Review proper installation of work progress.
   g. Identify any installation problems and acceptable corrective measures.
   h. Identify any measures to maintain or regain project schedule if necessary
4. MEETING 3 - 70% PROGRESS MEETING:
   a. Scheduled by the Contactor at 70% of proper completion of the work.
   b. To be held with the Contractor, Trade Contractor(s), Designer and the FUSD Lock Personnel.

c. Contractor to notify FUSD Project Manager and FUSD Lock Personnel at (559) 457-3331
d. FUSD Lock Personnel will examine all hardware for proper function and installation.
e. Inspect and identify any problems.
f. Establish method and procedures to maintain protections while progressing to project completion.
g. Inspect and identify any problems that may impede issuance of warranties or guaranties.
h. Maintain installed work until the Notice of Substantial Completion has been executed.

5. MEETING 4 - FINAL REVIEW
   a. Scheduled by the Contactor at 100% completion of the work.
   b. To be held with the Contractor and Designer as part of the Final Review.
   c. Refer to the Punch List Certificate.
6. PUNCH LIST CERTIFICATE:
   a. Provide a letter on Contractor's Letterhead certifying work provided, meets or exceeds the requirements, is completely installed, lubricated, adjusted, inspected and is otherwise complete.
   b. The Certificate shall be furnished upon the request for Final Review and included into the O/M Manuals.
   c. The letter shall include in the title "Punch List Certificate• and include the Contractor / Trade Contractor description of the inspections performed and any issues observed and addressed.
7. KEYING FOR ALL LOCKS
   a. All keying to be as directed by the District.
   b. Construction Keying for Interior locks: 0-Bit keyed by Hardware Supplier with keying information provided by FUSD and installed by Contractor.
   c. Construction Keying for Exteriors locks: I/C Cores #23-030 and construction keys shall be furnished by FUSD Key/Lock Department.
   d. At the time of final acceptance of work, FUSD will remove construction I/C Cores and key door to new system
   e. All District issued keys and construction keys issued to the Contractor or Sub Contractor must be returned to the Key Shop before the release of the retention money, no exceptions.

1.7 DELIVERY, STORAGE, AND HANDLING

A. Packing, shipping, handling, and unloading:
   1. Products shall be individually wrapped.
   2. Packaging of door hardware shall be the responsibility of the supplier.
      a. As material is received by hardware supplier from various manufacturers, sort and repackage in containers clearly marked with appropriate hardware set number to match set numbers of approved hardware schedule.
         1) Two or more identical sets may be packaged in same container.
   3. Products shall be handled in such a manner as to assure that they are free from dents, scratches and other damage. Damaged products will not be accepted at final inspection.

B. Acceptance at Site:

1. Products shall be labeled also with model numbers, catalog numbers, function and finish, identification related to final hardware schedule, and include basic installation instructions with each item or package.
2. Damaged products will not be accepted.

C. Storage and protection:
1. Products shall be stored above ground on level platforms, six (6) inches above ground, allowing air circulation under stacked units.
   a. Cover materials with protective waterproof covering providing for adequate air circulation and ventilation.
2. Provide secure lock-up for door hardware delivered to the Project, but not yet installed.
   a. Control handling and installation of hardware items that are not immediately replaceable so that completion of the Work will not be delayed by hardware losses both before and after installation.

1.8 CHANGES IN THE WORK:

A. Should changes be made in the Finish Hardware, the Hardware Supplier shall credit the District with the full purchase price. No restocking charge will be permitted or allowed.

1.9 WARRANTY

A. FUSD requirements for Guarantee.
1. Refer to the F.U.S.D. General Conditions and Requirements for Contract Close-out.

B. Contractor's General Warranty:
1. In accordance with Specification Section - WARRANTIES.

C. Manufacturer’s Warranty:
1. In accordance with manufacturer's written standard warranty:
   a. Closers:
      1) Warranty Period Ten (10) Years.
         a) Exception: Electronic Closers shall be Two (2) Years.
   b. Exit Devices:
      1) Warranty Period Ten (10) Years.
   c. All other hardware:
      1) Warranty Period Ten (10) Years.

D. Installer's Warranty:
1. In accordance with the terms of the Specification Section - WARRANTIES:
   a. Warranty period One (1) Year.

1.10 POST CONSTRUCTION SERVICES.

A. 90-Days after the "Notice of Completion" the Contractor (and trade contractor) shall adjust all hardware.

B. 11-Moths after the "Notice of Completion" the Architect, and Contractor (and trade contractor) shall hold a review of all hardware. Replacing and adjusting any hardware that is subject to the provisions of the warranty.

1.11 MAINTENANCE

A. Extra Materials:
   1. Furnish a complete set of specialized tools and maintenance instructions as needed for Owner's continued adjustment, maintenance, and removal and replacement of door hardware.

PART 2 - PRODUCTS

2.1 MANUFACTURERS

A. Hardware to be complete, all items fully operable, new, in perfect condition; same manufacturer throughout for each product type. Hardware not specifically described shall be similar to items specified for similar uses and location.

B. Mortise type hardware and hardware shall be made to template. Other hardware shall also be made to template wherever possible. Provide templates as noted in the "submittals" portion of this specification.

C. These products listed herein establish the size, pattern, color range and function selected by the Architect for this Project. Manufacturers that are listed as acceptable alternative manufacturers and substitutions must still comply with the requirements of this project and the products listed in order to be approved as an equivalent during the Submittal Process. If the acceptable alternative manufacturers listed or substitutions are not approved during the Submittal Process due to non-compliance with the contract documents, then the Contractor shall submit product specified.

D. Products from other manufacturers not listed must submit in accordance with Specification Section - SUBSTITUTION PROCEDURES.

2.2 MATERIALS

A. General:
   1. Base Metals: Produce hardware units of basic metal and forming method indicating using manufacturer's standard metal alloy, composition, temper, and hardness, but in no case of lesser (commercially recognized) quality than specified within this specification section for applicable hardware units for finish designations indicated.

B. FASTENERS

1. Furnish all necessary fasteners required to securely anchor all hardware in position for heavy use and long life. Fastener types and sizes to be per hardware manufacturer's recommendations, suitable for fastening to material to which hardware is applied. Fastener materials and finishes to match hardware items. At no time are self-tapping / threading fasteners allowed on panic/exit hardware or any of the device's parts including strike plate.

C. FASTENER TYPES:
1. To Wood: Phillips flat head, countersunk wood screws, full-threaded.
2. To Metal: Phillips flat head, countersunk machine screws, full-threaded.
3. Butt Hinges: Phillips flat head, countersunk wood screws, full-threaded.
4. Strikes, Face Plates and Similar Items: Phillips flat head, countersunk.
5. Push-Pull and Kick Plates Phillips oval head.
6. Closer and closer shoes to doors and panels-above-doors.
7. Thru-Bolts and Grommets (sex-bolts), sleeved.
8. Panic hardware to doors. Thru-Bolts and Grommets (sex-bolts), sleeved.
9. Self-Tapping sheet metal screws Do not use.
10. Screws at Interior Doors and Frames To match hardware finish.
11. Screws at Exterior Doors and Frames US26D Stainless Steel.

2.3 MANUFACTURED UNITS

A. Hardware, General:
1. Hardware to be complete, all items fully operable, new, in perfect condition; same manufacturer throughout for each product type. Hardware not specifically described shall be similar to items specified for similar uses and locations.
2. Labeled Openings: Hardware shall conform to label requirements. All labeled doors shall be self-closing.

B. Template Hardware:
1. Mortise type hardware and hardware applied to metal frames and doors shall be made to template. Other hardware shall also be made to template wherever possible. Provide templates.

C. Hinges:
1. General:
   a. Templates: Provide only template-produced units.
   b. Provide Phillips flat-head screws complying with the following requirements:
      1) For metal doors and frames, install machine screws into drilled and tapped holes.
      2) Finish screw heads shall match surface of hinges or pivots.
2. Butt:
   a. Provide hinge pins as follows:
      1) Out-Swing Exterior Doors Nonremovable pins.
      2) Out-Swing Corridor Doors with Locks Nonremovable pins.
      3) Interior doors Nonrising pins.
      4) Tips: Provide flat button and matching plug, finished to match leaves.
   b. Provide the number of hinges indicated, but not less than the following guidelines:
      1) Doors with heights up to 60 inches 2 Hinges.
      2) Door with heights 61 to 90 inches 3 Hinges.

3) Doors with heights 91 to 120 inches 4 Hinges.
4) For doors with heights more than 120 inches, provide four hinges, plus one additional hinge for every 30 inches of door height greater than 120 inches.

c. Hinges shall be sized in accordance with the following:
1) Typical Door Thickness and Frame Conditions:

	Door Thickness	Door Width	Butt Size
a)			
b)	1 3/4"	to 2' 4"	4"x 4"
c)	1 3/4"	to 3' 4"	4 1/2" x 4 1/2"
d)	1 3/4"	over 3' 4"	5" x 5

3. Thicker Doors and Frames with Projecting Trim: Size hinges to following criteria to provide proper width to clear trim projection when doors are fully open.
a. Doors 2 1/4" Thick or Less:
1) (2x door thickness) + (trim projection) - (1/2").
4. Number of Hinges per Door Leaf:
a. Doors 4' 0" to 7' 5" High: 2 pair (4 Hinges
5. Continuous:
a. Continuous hinges shall be UL rated as required.
b. Continuous hinges shall not obscure fire-rating labels of doors or door frames.

D. Lock Cylinders and Keying:
1. Lock Cylinders:
a. Construct lock cylinder parts from brass or bronze, stainless steel, or nickel silver.
2. Keying:
a. Review the keying system with the Owner and provide the type required (Master, grandmaster or great-grandmaster), either new or integrated with the Owner's existing keying system.
1) All keying to be as directed by the District.
b. Construction Keying:
1) All interior locks to be keyed by Hardware Supplier with keying information provided by F.U.S.D. and installed by Contractor.
2) All exterior construction I/C Cores #23-030 and construction keys shall be furnished by F.U.S.D. Key/Lock Department.
3) At the time of final acceptance of work, F.U.S.D. will remove construction I/C Cores and key door to new system.
4) Equip locks with cylinders for construction-core pin tumbler inserts. Provide only temporary inserts for the construction period, and remove these when directed.
a) Provide final cores and keys prior to Architect's initial punch list.
3. Deadlocks: Rotating cylinder trim rings of attack-resistant design. Mounting plates and actuator shields of plated cold-rolled steel. Mounting screws of 1/4" diameter steel and protected by drill- resistant ball bearings. Steel alloy deadbolt with hardened steel roller. Strike alloy deadbolt with reinforcer and two 3" long screws. ANSI A156.5, 1992 Grade 1 certified.

E. Key Control System:
1. Provide a key control system including envelopes, labels, tags with self-locking key clips, receipt forms, 3-way visible card index, temporary markers, permanent markers, and standard metal cabinet, all as recommended in writing by system manufacturer, with capacity for 150 percent of the number of locks required for the Project.

a. Provide hinged-panel type cabinet for wall mounting, or multiple-drawer type cabinet. Coordinate location with the Architect. Provide submittal for review before fabrication or ordering.

F. Locks, Latches, and Bolts:

1. I/C Cores and Rim Cylinders:
   a. All exterior construction I/C Cores # 23-030 shall be furnished by F.U.S.D.
   b. All Rim Cylinders SCHLAGE # 20-079 shall be furnished and installed by the Contractor.
   c. At final acceptance of work, all exterior I/C Cores shall be furnished and installed by F.U.S.D.
   d. All keyway information to be provided by F.U.S.D. Maintenance Lock/Key Department.
2. Locksets:
   a. To be SCHLAGE ND¢ series, Rhodes (no substitutes).
   b. Contractor to provide Locksets complete with Schlage Classic cylinders # 23-065.
3. All doors shall be operable from within, without the use of a key by merely rotating the latching handle.
4. All doors in areas used by students shall be self-releasing type, operable from within without the use of a key or special knowledge or effort.
5. Provide manufacturer's standard wrought box strike for each latch or lock bolt, with curved lip extended to protect frame, finished to match hardware set, unless otherwise indicated.
6. Lock Protectors:
   a. Lock astragals shall be provided with internally threaded fasteners for flat head machine screws. No hex head or carriage bolt fasteners will be permitted.
   b. Must be through bolted to door.
7. Provide 5/8 inch minimum throw of latch on pairs of doors. Comply with UL requirements for throw of bolts and latch bolts on fire rated fire openings.
   a. Provide 1/2 inch minimum throw of latch for other bored and preassembled types of locks
   b. Provide 3/4 inch minimum throw of latch for mortise locks.
   c. Provide 1 inch minimum throw for all dead bolts.
8. Provide flush bolt heads a minimum of 1/2 inch diameter rods of brass, bronze, or stainless steel with minimum 12 inch long rod for doors up to 7'-0" in height.
   a. Provide longer rods as necessary for doors exceeding 7'-0" in height.
   b. Automatic Flush Bolts shall be of the low operating force design. Utilize the top bolt only model for interior doors where applicable and as permitted by testing procedures.
   c. Manual Flush Bolts only permitted on storage or mechanical openings as scheduled.
   d. Provide dust-proof strikes at openings using bottom bolts.
9. Provide keyed dogging devices on doors equipped with exit devices.
   a. Do not provide keyed exit devices on fire rated doors equipped with exit devices.
10. Where rabbeted door stiles are indicated, provide special rabbeted front on lock and latch units and bolts.
11. Locksets and Latchsets in Acoustical Doors And Frames require a 3-3/4" backset; verify and coordinate.
12. All egress doors shall comply with AB 211 (2009-2010).

G. Exit / Panic Devices:

1. Panic hardware shall comply with CCR Title 24, Part 12, Chapter 12-10-302 (a).
    a. The release mechanism shall be so designed that a horizontal force of 15 lbs. or less will actuate the release bar and latches applied in the direction of travel.
2. No surface mounted vertical rods are allowed.
3. Provide certificate by independent testing laboratory that device has completed over 1,000,000 cycles and can still meet ANSI/BHMA A156.3 standards.
4. Device shall bear UL label for fire and or panic as may be required.
5. Removable Mullions:
    a. Removable with single turn of building key, and securely reinstalled without need for key.
    b. All removable mullions shall be steel or aluminum clad steel whether or not the opening is fire-rated or not.
6. No manual Flush Bolts on egress doors.

H. Closers and Door Control Devices:
1. Door closer cylinders shall be of high strength cast iron construction with double heat treated pinion shaft to provide low wear operating capabilities of internal parts throughout the life of the installation.
    a. All door closers shall be tested to ANSI/BHMA A156.4 test requirements by a BHMA certified testing laboratory.
    b. A written certification showing successful completion of a minimum of 10,000,000 cycles must be provided.
2. Except as otherwise specifically indicated, comply with manufacturer's written recommendations for size of door control unit depending on size of door, exposure to weather, and anticipated frequency of use.
    a. Where parallel arms are indicated for closers, provide closer unit one size larger than recommended for use with standard arms.
    b. Effort to operate shall conform to CBC Section 11B-404.2.9 accessibility requirements as follows:
        1) Exterior/Interior doors 5.0 pounds maximum.
            a) The Authority having Jurisdiction may increase the maximum effort to operate Fire Doors to achieve positive latching, but not to exceed 15 lbs maximum.
3. Where manual closers are indicated for doors required to be accessible to the physically challenged, provide adjustable units complying with ANSI A 117.1 and CBC Section 11B-404.2.9 provisions for door opening force and delayed action closing.
4. Where combination door closers and holders are indicated, provide units designed to hold door in an open position under normal usage and to release and close door automatically under fire conditions.
    a. Incorporate an integral electromagnetic holder mechanism designed for use with UL listed fire detectors, provided with normally closed switching contacts.
    b. When indicated, provide integral smoke detector device in combination door closers and holders complying with UL 228, Second Edition.
5. Provide grey resilient parts for exposed bumpers.
6. Closures indicated for use on Acoustical Doors and Frames shall allow for a minimum 1/2" up-down movement due to the Cam-Lift hinges.

I. Kickplates:
1. Provide manufacturer's standard exposed fasteners for door trim units consisting of either machine screws or self-tapping screws.

2. Fabricate edge trim of stainless steel to fit door thickness in standard lengths or to match height of protection plates.
3. Fabricate protection plates not more than 1-1/2 inches less than door width on hinge side and not more than 1/2 inch less than door width on pull side by height indicated.
   a. Protection plates shall be stainless steel, 0.050 inch (18 gage).

J. Door Stops:
1. At all Toilet Room Partition Doors, provide stops at adjacent walls or partitions. Stops shall be aligned with the top and bottom of Toilet Partition Doors, and shall be installed on both the Door and the adjacent wall or partition.
2. Coordinate the installation of backing in walls with the door supplier, aligned with the top and bottom of doors.
3. Unless otherwise noted in Hardware Sets, provide wall type with appropriate fasteners. Where wall type cannot be used, provide floor type. If neither can be used, provide overhead type.
4. All Floor Stops shall be installed within four (4) inches maximum from the face of wall, bollard or partition.
5. Overhead stops shall be made of stainless steel and non-plastic mechanisms and finished metal end caps. Field-changeable hold-open, friction and stop-only functions.

K. Seals:
1. Provide continuous weatherstripping on exterior doors and smoke, light, or sound seals on interior doors where indicated or scheduled.
   a. Provide noncorrosive fasteners for exterior applications and elsewhere as indicated.
   b. Provide silicone gasket at all rated and exterior doors, in accordance with ASTM E 283 “Test method for Determining Rate of Air Leakage Through Exterior Windows, Curtain Walls, and Doors Under Specified Pressure Differences Across the Specimum”.
2. Provide only those units where resilient or flexible seal strip is easily replaceable and readily available from stocks maintained by manufacturer.
3. Provide silencers for hollow metal frames, 3 for single doors, 2 for pairs of doors.
   a. Omit where sound or light seals occurs, or for fire-resistive-rated door assemblies.

L. Thresholds:
1. Provide standard metal threshold unit of type, size, and profile as shown or scheduled.
2. Exterior Doors: Provide units not less than 4 inches wide, formed to accommodate change in floor elevation, fabricated to accommodate door hardware and to fit door frames, and as follows:
   a. For in-swinging doors provide units with interlocking lip and interior drain channel.
      1) Include hook on bottom edge of door and drain pan.
   b. For out-swinging doors provide rabbeted type units with replaceable weatherstrip insert in stop.

M. Door Shoes & Door Top Caps: Provide galvanized door shoes at all exterior wood doors and galvanized top caps at all exterior out-swing doors.

2.4 FINISHES

A. Hardware finishes:
1. General:

a. All hardware shall be satin chromium (US26D – 626) unless otherwise noted.
b. Provide push plates, pull plates and kick or armor plates in satin stainless steel (US32D – 630) unless otherwise noted.
c. Door closers shall be powder-coated to match other hardware, unless otherwise noted.
d. Aluminum items shall be finished anodized aluminum (US28 – 628), except thresholds which can be furnished as standard mill finish.

2. Match items to the manufacturer's standard color and texture finish for the latch and lock sets (or push-pull units if no latch or lock sets).
3. Provide finishes that match those established by BHMA or, if none established, match Architect's sample.
4. Provide quality of finish, including thickness of plating or coating (if any), composition, hardness, and other qualities complying with manufacturer's standards, but in no case less than specified by referenced standards for the applicable units of hardware.
5. The designations used in schedules and elsewhere to indicate hardware finishes are those listed in ANSI/BHMA A156.18, "Materials and Finishes", including coordination with the traditional U.S. Finishes shown by certain manufacturers for their products.

PART 3 - EXECUTION

3.1 EXAMINATION

A. Site verification of conditions:
1. Prior to the execution of the work under this specification section, inspect the installed work executed under other sections of this Project Manual which affect the execution of work under this specification section.
   a. Verify that doors and frames are square and plumb and ready to receive work and dimensions are as instructed in writing by the manufacturer.
2. Report unacceptable conditions to the Architect. Do not begin work until unacceptable conditions have been corrected.
3. Execution of work under this specification section shall constitute acceptance of existing conditions.

3.2 PREPARATION

A. Coordination:
1. Coordinate work under this specification section with work specified under other sections to ensure proper and adequate interface of work.
   a. Coordinate electrical power needs for those hardware items requiring electrical interface.
   b. Coordinate electrical alarm needs (security, fire/smoke detection) for those hardware items requiring electrical alarm interface.
2. Provide all required hardware templates.

B. Surface preparation:
1. Prepare surface in accordance with manufacturer's written instructions and recommendations.
2. Coordinate the blocking required for all wall mounted hardware.

3. Clean substrates of substances (oil, grease, rolling compounds, incompatible primers, loose mill scale, etc.) which could impair bond of materials specified within this section.

3.3 INSTALLATION

A. General:
1. In accordance with manufacturer's written instructions and recommendations unless specifically noted otherwise.
   a. Hardware distributor shall assist and advise installer in correcting field problems arising during installation of hardware.
   b. Hardware distributor shall be on the Project within 48 hours upon being notified by the Contractor.
   c. Hardware distributor shall assist installer in the proper adjustment of all door closers, and other operating devices.
2. In accordance with approved submittals.
3. In accordance with Regulatory Requirements.
4. Mount hardware units at heights indicated in following applicable publications, except as specifically indicated or required to comply with governing regulations and except as otherwise directed by the Architect.
   a. Steel Doors and Frames: "Recommended Locations for Builders Hardware for Standard Steel Doors and Frames" by the Door and Hardware Institute.
   b. Door opening devices shall be installed at 34" minimum to 44" AFF maximum height per CBC Section 11B-404.2.7.
5. Install each hardware item in compliance with the manufacturer's written instructions and recommendations. Where indicated and where cutting and fitting is required to install hardware onto or into surfaces that are later to be painted or finished in another way, coordinate removal, storage, and reinstallation or application of surface protection with finishing work specified in the Division 09 Sections.
   a. Do not install surface-mounted items until finishes have been completed on the substrate involved.
6. Set units level, plumb, and true to line and location. Adjust and reinforce the attachment substrate as necessary for proper installation and operation.
7. Drill and countersink units that are not factory prepared for anchorage fasteners. Space fasteners and anchors in accordance with industry standards.
8. Set thresholds for exterior doors in full bed of butyl-rubber or polyisobutylene mastic sealant complying with requirements in Specification Section - SEALANTS.
9. Weatherstripping and seals shall comply with manufacturer's written instructions and recommendations to the extent installation requirements are not otherwise indicated.

3.4 FIELD QUALITY CONTROL

A. Inspection:
1. Contractor shall inspect all hardware to assure that it was installed correctly and is in proper working order.
2. The Contractor shall schedule an inspection prior to substantial completion, and notify the Owner's Inspector and any regulatory agencies of the time 48 hours prior to the inspection.
   a. The inspection shall cover checking all locks and verifying that they have been installed in accordance with the hardware schedule and the keying schedule.

3.5 ADJUSTING

A. Adjusting:
1. Adjust and check each operating item of hardware and each door to ensure proper operations or function of every unit.
   a. Replace units that cannot be adjusted to operate freely and smoothly or as intended for the application made.
      1) Where door hardware is installed more than one month prior to acceptance or occupancy of a space or area, return to the installation during the week prior to acceptance or occupancy and make final check and adjustment of all hardware items in such space or area.
      2) Clean operating items as necessary to restore proper function and finish of hardware and doors.
      3) Adjust door control devices to compensate for final operation of heating and ventilating equipment.

3.6 CLEANING

A. Clean in accordance with Specification Section - PROJECT CLOSEOUT.
1. Clean any soiled surfaces immediately.
2. Finish shall be clean and ready for the application of any additional finishes.

3.7 DEMONSTRATION

A. In accordance with Specification Section - PROJECT CLOSEOUT.
1. Provide the services of a factory-authorized service representative to provide start-up service and to demonstrate and train Owner's maintenance personnel as specified below.
   a. Provide the services of a factory-authorized service representative to demonstrate and train Owner's maintenance personnel as specified below.
      1) Instruct Owner's personnel in the proper adjustment and maintenance of door hardware and hardware finishes.

3.8 SCHEDULES

A. The hardware schedule should be used as a guide only. In case of omissions, provide hardware in accordance with that scheduled for a similar opening.

B. Refer to the attached FUSD Standard Hardware Supplement and Hardware Groups.

END OF SECTION

INTERIOR AND EXTERIOR LATCH SETS , LOCKSETS & COMMERCIAL LOCKS

Schlage ANSI
ND10S **F75**
Passage latch
- Both levers always unlocked.

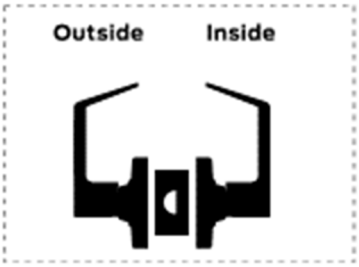

HARDWARE GROUP NO. 10 – INTERIOR PASSAGE DOOR

EACH TO HAVE:

QTY		DESCRIPTION	CATALOG NUMBER	FINISH	MFR
3	EA	SD HINGE	BB1279 4.5 X 4.5 NPR	US-26D	HAG
1	EA	OFFICE LOCK	ND10PD RHO	626	SCH
1	EA	CYLINDERS	NONE	626	SCH
1	EA	KICK PLATE	8400 10" X 2" LDW B-CS	630	IVE
1	EA	DOOR STOP	1209	626	TRI
3	EA	SILENCER	GJ64	GRY	GJ

Schlage ANSI
ND53PD **F109**
Entrance lock
- Turn/push-button locking: Pushing and turning the button locks the outside lever, requiring use of a key until the button is manually unlocked.
- Push-button locking: Pushing button locks outside lever until unlocked by key or by turning the inside lever.

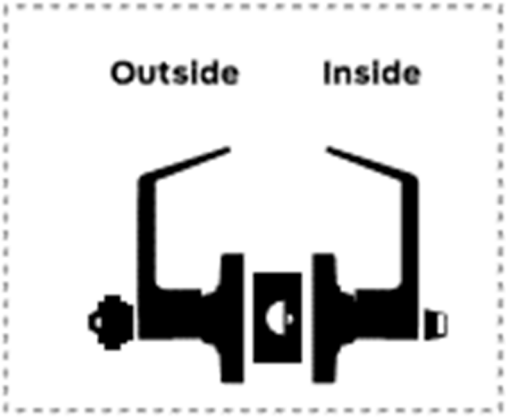

HARDWARE GROUP NO. 53C – INTERIOR DOOR - OFFICE LOCK WITH CLOSURE

EACH TO HAVE:

QTY		DESCRIPTION	CATALOG NUMBER	FINISH	MFR
3	EA	SD HINGE	BB1279 4.5 X 4.5 NPR	US-26D	HAG
1	EA	OFFICE LOCK	ND53PD RHO	626	SCH
1	EA	CYLINDERS	CLASSIC 23-065	626	SCH
1	EA	KICK PLATE	8400 10" X 2" LDW B-CS	630	IVE
1	EA	DOOR STOP	1209	626	TRI
3	EA	SILENCER	GJ64	GRY	GJ
1	EA	SURFACE CLOSER	4111 / 4011 – 3077EDA-72	689	LCN

Schlage	ANSI
ND75PD	-

Classroom security lock

- Key in either lever locks or unlocks outside lever.
- Inside lever is always unlocked.

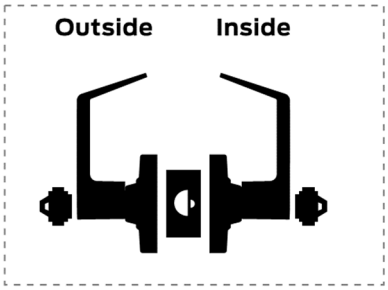

HARDWARE GROUP NO. 75C – INTERIOR DOOR - CLASSROOM SECURITY LOCK WITH CLOSURE

EACH TO HAVE:

QTY		DESCRIPTION	CATALOG NUMBER	FINISH	MFR
3	EA	HD HINGE	BB1268 4.5 X 4.5 NPR	US-26D	HAG
1	EA	CLASSROOM SECURITY	ND75PD RHO XN12-035	626	SCH
2	EA	CYLINDERS	CLASSIC 23-065	626	SCH
1	EA	KICK PLATE	8400 10" X 2" LDW B-CS	630	IVE
1	EA	DOOR STOP	1209	626	TRI
3	EA	SILENCER	GJ64	GRY	GJ
1	EA	SURFACE CLOSER	4111 / 4011-3077EDA, 72, TBWMS	689	LCN

Schlage	ANSI
ND80PD	**F86**

Storeroom lock

- Outside lever is fixed.
- Entrance by key only.
- Inside lever always unlocked.

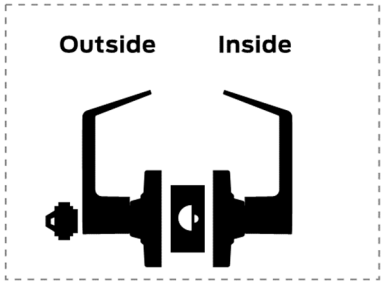

HARDWARE GROUP NO. 80 – STOREROOM LOCK

EACH TO HAVE:

QTY		DESCRIPTION	CATALOG NUMBER	FINISH	MFR
3	EA	SD HINGE	BB1279 4.5 X 4.5 NPR	US-26D	HAG
1	EA	STOREROOM LOCK	ND80PD RHO	626	SCH
1	EA	CYLINDERS	CLASSIC 23-065	626	SCH
1	EA	KICK PLATE	8400 10" X 2" LDW B-CS	630	IVE
1	EA	DOOR STOP	1209	626	TRI
3	EA	SILENCER	GJ64	GRY	GJ

HARDWARE GROUP NO. 80C – STOREROOM LOCK WITH CLOSURE

EACH TO HAVE:

QTY		DESCRIPTION	CATALOG NUMBER	FINISH	MFR
3	EA	SD HINGE	BB1279 4.5 X 4.5 NPR	US-26D	HAG
1	EA	STOREROOM LOCK	ND80PD RHO	626	SCH
1	EA	CYLINDERS	CLASSIC 23-065	626	SCH
1	EA	KICK PLATE	8400 10" X 2" LDW B-CS	630	IVE
1	EA	DOOR STOP	1209	626	TRI
3	EA	SILENCER	GJ64	GRY	GJ
1	EA	SURFACE CLOSER	4111 / 4011-3077EDA, 72, TBWMS	689	LCN

Schlage ANSI

ND85PD -

Faculty restroom lock

- Outside lever is fixed.
- Entrance by key only.
- Push-button in inside lever activates visual occupancy indicator, allowing only emergency master key to operate.
- Turn inside lever or close door to release visual occupancy indicator.
- Rotation of inside spinner-button provides lock-out feature by keeping indicator thrown.

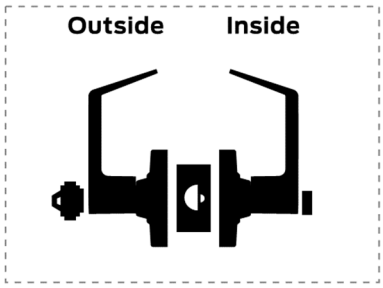

HARDWARE GROUP NO. 85C – INTERIOR / SINGLE OCCUPANCY FACULTY RESTROOM + CLOSURE

EACH TO HAVE:

QTY		DESCRIPTION	CATALOG NUMBER	FINISH	MFR
3	EA	HD HINGE	BB1268 4.5 X 4.5 NPR	US-26D	HAG
1	EA	STOREROOM LOCK	ND85PD RHO	626	SCH
1	EA	CYLINDERS	CLASSIC 23-000	626	SCH
1	EA	KICK PLATE	8400 10" X 2" LDW B-CS	630	IVE
1	EA	DOOR STOP	1209	626	TRI
3	EA	SILENCER	GJ64	GRY	GJ
1	EA	SURFACE CLOSER	4111 / 4011-3077EDA, 72, TBWMS	689	LCN

INTERIOR AND EXTERIOR PANIC HARDWARE

HARDWARE GROUP NO. 22E - EXTERIOR PANIC DEVICE / NIGHT LATCH WITH HEX DOGGING

QTY		DESCRIPTION	CATALOG NUMBER	FINISH	MFR
3	EA	HD HINGE	BB1268 4.5 X 4.5 NPR	US-26D	HAG
1	EA	PANIC HARDWARE	AX22-210NL SP28-299 Hex-Key dogging-GBK	626	VON
1	EA	RIM CYLINDER HOUSING	20-079 WITHOUT CORE	626	SCH
1	EA	CONSTRUCTION CORE	SUPPLIED BY FUSD	-	SCH
1	EA	PERMANENT CYLINDER	SUPPLIED BY FUSD	626	SCH
1	EA	SURFACE CLOSER	OUTSWINGING 4111, 72, TBWMS	689	LCN
1	EA	DOOR STOP	1209	626	TRI
1	SET	GASKETING	297AV	GRY	GJ
1	EA	KICK PLATE	8400 10" X 2" LDW B-CS	630	IVE
1	EA	SURFACE CLOSER	OUTSWINGING 4111, 72, TBWMS	689	LCN
1	EA	DOOR BOTTOM	222APK	AL	PEM
1	EA	THRESHOLD	196A-228A-195A	AL	PEM

HARDWARE GROUP NO. 222E -PAIR EXTERIOR PANIC DEVICE / NIGHT LATCH WITH HEX DOGGING

QTY		DESCRIPTION	CATALOG NUMBER	FINISH	MFR
6	EA	HD HINGE	BB1268 4.5 X 4.5 NPR	US-26D	HAG
2	EA	PANIC HARDWARE	AX22-210NL SP28-299 Hex-Key dogging-GBK	626	VON
1	EA	KEYED REMOVABLE MULLION	KR4954-STABILIZERS-MT54	SP28	VON
1	EA	CYLIDNER BODY	30-137- 0-Bitted keyway	626	SCH
2	EA	RIM CYLINDER HOUSING	20-079 WITHOUT CORE	626	SCH
2	EA	CONSTRUCTION CORE	SUPPLIED BY FUSD	-	SCH
2	EA	PERMANENT CYLINDER	SUPPLIED BY FUSD	626	SCH
2	EA	SURFACE CLOSER	OUTSWINGING 4111, 72, TBWMS	689	LCN
2	EA	DOOR STOP	1209	626	TRI
2	SET	GASKETING	297AV	GRY	GJ
2	EA	KICK PLATE	8400 10" X 2" LDW B-CS	630	IVE
2	EA	SURFACE CLOSER	OUTSWINGING 4111, 72, TBWMS	689	LCN
2	EA	DOOR BOTTOM	222APK	AL	PEM
2	EA	THRESHOLD	196A-228A-195A	AL	PEM

EXTERIOR SITE DOORS AND GATES

HARDWARE GROUP NO. 22G – EXTERIOR GATE - PANIC DEVICE / NIGHT LATCH WITH HEX DOGGING

QTY		DESCRIPTION	CATALOG NUMBER	FINISH	MFR
1	EA	HINGE	LOXINOX MAMOTH 180	SILVER	LOX
1	EA	PANIC HARDWARE	AX22-210NL SP28-299 Hex-Key dogging-GBK	626	VON
1	EA	RIM CYLINDER HOUSING	20-079 WITHOUT CORE	626	SCH
1	EA	CONSTRUCTION CORE	SUPPLIED BY FUSD	-	SCH
1	EA	PERMANENT CYLINDER	SUPPLIED BY FUSD	626	SCH
1	EA	DOOR STOP	1209	626	TRI

SECTION 088000 – GLASS

PART 1 - GENERAL

1.1 SUMMARY

A. This Section includes the following:
   1. Provide all material, labor, equipment and services necessary to completely install all glass materials, accessories and other related items necessary to complete the Project as indicated by the Contract Documents.

B. Related Sections: The following Project Manual Sections contain requirements that relate to this section:
   1. ALL DIVISION 00 SPECIFICATION SECTIONS.
   2. ALL DIVISION 01 SPECIFICATION SECTIONS.
   3. 07 92 00 SEALANTS
   4. 08 11 00 METAL DOORS AND FRAMES
   5. 08 14 16 WOOD DOORS
   6. 09 91 00 PAINTING
   7. 10 05 00 MISCELLANEOUS SPECIALTIES
   8. 10 14 00 IDENTIFYING DEVICES
   9. 10 28 13 TOILET ACCESSORIES
   10. ALL SPECIFICATION SECTIONS IN THE FACILITY SERVICES SUBGROUP.
   11. ALL SPECIFICATION SECTIONS IN THE SITE AND INFRASTRUCTURE SUBGROUP.

1.2 REFERENCES

A. Standards:
   1. In accordance with the following standards:
      a. AAMA American Architectural Manufacturers Association.
      b. ANSI American National Standards Institute.
      c. ASTM American Society for Testing and Materials.
      d. CSPC Consumer Products Safety Commission.
      e. FGMA Flat Glass Marketing Association Glazing Manual, 1990 Edition.
      f. GANA Glass Association of North America
      g. GTA Glass Tempering Association.
      h. IGCC Insulating Glass Certification Council.
      i. LSGA Laminated Safety Glass Association.
      j. SGCC Safety Glazing Certification Council.
      k. SIGMA Sealed Insulating Glass Manufacturers Association.

1.3 DEFINITIONS

A. Manufacturer is used in this Section to refer to a firm that produces primary glazing, fabricated glazing, or both as defined in the referenced glazing standards.

1. Deterioration of Coated Glass: Defects developed from normal use that are attributed to the manufacturing process and not to causes other than glass breakage and practices for maintaining and cleaning coated glass contrary to manufacturer's written directions. Defects include peeling, cracking, and other indications of deterioration in metallic coating.
2. Deterioration of Laminated Glass: Defects developed from normal use that are attributed to the manufacturing process and not to glass breakage and practices for maintaining and cleaning laminated glass contrary to manufacturer's written directions. Defects include edge separation, delamination materially obstructing vision through glass, and blemishes exceeding those allowed by referenced laminated glass standard.
3. Deterioration of Insulating Glass: Failure of the hermetic seal under normal use that is attributed the manufacturing process and not to causes other than glass breakage and improper practices for maintaining, and cleaning insulating glass contrary to manufacturers written instructions. Evidence of failure is the obstruction of vision by dust, moisture, or film on the interior surfaces of glass.
4. f.o.b. – "Free On Board".
5. Glass Surfaces:
   a. Single Glazed:
      1) Outside face of the building of the single pane is the #1 Surface, and the inside face of the single pane is the #2 Surface.
   b. Dual Glazed:
      1) Outside face of the building of the first pane is the #1 Surface, and the face towards the insulating space of the first pane is the #2 Surface - then the insulated space - the face of the second pane towards the insulating space is the #3 Surface, and the face of the second pane facing the inside of the building is the #4 Surface.

1.4 SYSTEM DESCRIPTION

A. Performance Requirements: It is the intention of this specification and the drawings to form a guide for a completely sealed glazing system. Any items not specifically noted but necessary for a completely sealed glazing system shall be provided under this section.
   1. Provide glazing systems that are produced, fabricated, and installed to withstand normal thermal movement, wind loading, and impact loading (where applicable), without failure, including loss or glazing breakage attributable to the following: defective manufacture, fabrication, and installation; failure of sealants or gaskets to remain watertight and airtight; deterioration of glazing materials; and other defects in construction.
   2. Glass Design: Glass thickness indicate minimums and are for detailing only. Confirm glass thicknesses by analyzing Project loads and in-service conditions. Provide glass lites for the various size openings in the thicknesses and strengths (annealed or heat-treated) to meet or exceed the following criteria:
      a. Minimum glass thickness for lites in exterior walls shall be not less than 6.0mm (1/4" nom.).
   3. Thermal Movement: Provide glazing that allows for thermal movement resulting from the following maximum change (range) in ambient and surface temperatures acting on glass-framing members and glazing components. Base engineering calculation on materials' actual surface temperatures due to both solar heat gain and nighttime sky heat loss.
      a. Temperature Change Range: 120 deg F, ambient; 180 deg F, material surfaces..

1.5 SUBMITTALS

A. Submit in accordance with Specification Section - SUBMITTAL PROCEDURES:
1. Coordination Drawings:
a. Submit installer's coordination drawings indicating the work of this section with that of related work of other sections for proper interface of the completed work. Installer shall coordinate and obtain approvals from the work of other related sections prior to submitting to the Architect.
2. Product Data.
a. Submit manufacturer's product data for each glazing product and accessory material indicated.
3. Samples.
a. Provide 12 inch square sample of each glass type, color and pattern selected.
b. Provide 6 inch square samples of insulated glazing panels for each glazing type and pattern selected.
c. Provide 12 inch long samples of each type of glazing sealant, gasket or glazing tape. Install sealant or glazing material sample between two strips of material representative in color of the adjoining framing system.
4. Quality Assurance/Control Submittals:
a. Test Reports:
1) Compatibility and Adhesion Test: From sealant manufacturer indicating that glazing sealants were tested for adhesion to glass and glazing channel substrates and compatibility with glass and other glazing material.
b. Certificates:
1) Contractor's Certification.
2) Qualification Data:
a) Material Qualifications.
b) Installer Qualifications.
c) Manufacturer/Supplier Qualifications.
3) Product Certificates:
a) Fire-Resistive Ceramic Glazing materials.
c. Manufacturer's Written Instructions:
1) Manufacturer's written installation instructions for all products.
5. Closeout Submittals in accordance with the following:
a. Maintenance Data in accordance with Specification Section - PROJECT CLOSEOUT.
b. Record Documents in accordance with Specification Section - RECORD DOCUMENTS.
c. Warranty in accordance with Specification Section - WARRANTIES.
1) Special Warranties:
a) Coated Glass Products.
b) Laminated Glass Products.
c) Insulated Glass Products.
d) Insulated Glazing Products.

1.6 QUALITY ASSURANCE

A. Qualifications:

1. Material Qualifications:
   a. Comply with published recommendations of glazing product manufacturers and organizations listed, except where more stringent requirements are indicated. Refer to these publications for glazing terms not otherwise defined in this Section or in referenced standards.
   b. Obtain glazing from one source for each product indicated.
2. Installer Qualifications:
   a. An experienced Installer who has completed three (3) projects similar in materials, design and extent to that indicated for this Project; whose work has resulted in glass isntallation with a record of successful in-service performance..
3. Manufacturer/Supplier Qualifications:
   a. Firm experienced in successfully producing/supplying products similar to that indicated for this Project, with sufficient production/supply capacity to produce/supply required units without causing delay in the work.

B. Regulatory Requirements:
1. In accordance with Specification Section - REGULATORY REQUIREMENTS, and the following:
   a. CARB Materials and equipment used for this Project shall comply with the current applicable regulations of the California Air Resources Board (CARB) and the Environmental Protection Agency (EPA), in the area where the project is located.
   b. All glazing shall comply with provisions of CBC Chapter 24 for quality standards and CBC Section 2403.1 for identification.
   c. All glazing subject to Hazardous Locations shall comply with Safety Glazing Requirements and CBC Chapter 2406.

C. Certificates:
1. Contractor's Certification: Provide a letter on Contractor's Letterhead certifying work provided, meets or exceeds, the Code Minimum requirements, and the other specified requirements of this Section.
2. Qualification Data: Contractor's installation certificates.
3. Product Certificates: Glazing materials manufacturers certifying that their products comply with specified requirements.
4. Fire-Resistive Ceramic Glazing materials certification that products comply with CPSC Requirements.

D. Meetings:
1. Pre-Installation: Schedule prior to the start of work.
   a. Coordinate the work with other work being performed.
   b. Identify any potential problems that may impede planned progress and proper installation of work regarding quality of installation and warranty requirements.
   c. Pre-glazing conference: Scheduled by the Contractor prior to the start of any glazing operation for the proper performance of the work.
      1) Minimum agenda shall be to review the work required; discuss field observations, problems, and decisions; corrective measures if necessary; and maintenance of quality and work standards in accordance with manufacturer's warranty requirements.
2. Progress: Scheduled by the Contractor during the performance of the work.
   a. Review for proper installation of work progress.
   b. Identify any installation problems and acceptable corrective measures.
   c. Identify any measures to maintain or regain project schedule if necessary.

3. Completion: Scheduled by the Contractor upon proper completion of the work.
   a. Inspect and identify any problems that may impede issuance of warranties or guaranties.
   b. Maintaining installed work until the Notice of Substantial Completion has been executed.

1.7 DELIVERY, STORAGE, AND HANDLING

A. Packing, shipping, handling, and unloading:
   1. Products shall be handled in such a manner as to assure that they are free from dents, scratches and other damage.
      a. Protect glazing materials to comply with manufacturer's written directions and as needed to prevent damage to glazing and glazing materials from condensation, temperature changes, direct exposure to sun, or other causes.
   2. Where insulating glass units will be exposed to substantial altitude changes, comply with insulating glass fabricator's recommendations for venting and sealing to avoid hermetic seal ruptures.

B. Acceptance at Site:
   1. Products must be in manufacturer's original unopened containers with labels indicating brand name, model, and grade.
   2. Damaged products will not be accepted.

C. Storage and Protection:
   1. Products shall be stored above ground on level platforms, six (6) inches above ground, allowing air circulation under stacked units.
      a. Cover materials with protective waterproof covering providing for adequate air circulation and ventilation.

1.8 PROJECT CONDITIONS

A. Environmental Requirements:
   1. Do not proceed with glazing when ambient and substrate temperature conditions are outside the limits permitted by glazing materials manufacturer or when glazing channel substrates are wet from rain, frost, condensation, or other causes.
      a. Do not install liquid sealants when ambient and substrate temperature conditions are outside of limits by glazing sealant manufacturer or below 40 deg F.

1.9 WARRANTY

A. Contractor's General Warranty:
   1. In accordance with Specification Section - WARRANTIES.

B. Manufacturer’s Warranty:
   1. In accordance with manufacturer's written standard warranty.
   2. Manufacturer's Warranty on Coated Glass Products:
      a. Submit written warranty signed by coated glass manufacturer agreeing to replace coated glass units that deteriorate as defined in "Definitions" article, f.o.b. the nearest shipping point of Project Site, within specified warranty period.

b. Warranty Period: Five (5) Years.
1) From date of Substantial Completion.

3. Manufacturer's Warranty on Laminated Glass:
a. Submit written warranty signed by insulating glass manufacturer agreeing to replace laminated glass units that deteriorate as defined in the "Definitions" article, f.o.b. the nearest shipping point of Project Site, within specified warranty period.
b. Warranty Period: Five (5) Years.
1) From date of Substantial Completion.

C. Installer's Warranty:
1. In accordance with the terms of the Specification Section - WARRANTIES:
a. Warranty period One (1) Year.

PART 2 - PRODUCTS

2.1 MANUFACTURERS

A. These products listed herein establish the size, pattern, color range and function selected by the Architect for this Project. Manufacturers that are listed as acceptable alternative manufacturers and substitutions must still comply with the requirements of this project and the products listed in order to be approved as an equivalent during the Submittal Process. If the acceptable alternative manufacturers listed or substitutions are not approved during the Submittal Process due to non-compliance with the contract documents, then the Contractor shall submit product specified.
1. Specified Annealed Float Glass product manufacturer, or approved equivalent:
a. Class 1 materials:
1) PPG INDUSTRIES, INC.
2) Acceptable Alternative Class 1 Manufacturers:
a) AFG INDUSTRIES, INC.
b) CARDINAL GLASS INDUSTRIES.
c) GUARDIAN INDUSTRIES CORPORATION
d) PILKINGTON SALES (NORTH AMERICA) LTD.
b. Class 2 materials, Pyrolytic Coated (On-Line Process):
1) PPG INDUSTRIES, INC., "Graylite" Tinted Glass.
2) Acceptable Alternative Class 2 Pyrolytic (On-Line) manufacturers:
a) AFG INDUSTRIES, INC.
b) PILKINGTON SALES (NORTH AMERICA) LTD.
c. Class 2 materials, Applied Coating (Off-Line Process):
1) VIRACON INC.
2) Acceptable Alternative Class 2 Applied Coating (Off-Line) manufacturers:
a) AFG INDUSTRIES, INC.
b) CARDINAL GLASS INDUSTRIES.
c) GUARDIAN INDUSTRIES CORPORATION.
d) PILKINGTON SALES (NORTH AMERICA) LTD.
e) PPG INDUSTRIES, INC.
2. Specified Laminated Glass product manufacturer, or approved equivalent:
a. OLD CASTLE GLASS, See schedule at the end of this section for type.
b. Interlayer Manufacturers:
1) SOLUTIA INC., Clear Interlayers.
2) DU PONT SENTRYGLAS EXPRESSIONS, Custom Graphic Interlayer.

3. Specified Mirrored Glass product manufacturer, or approved equivalent:
4. Specified Insulating Glazing Panel product manufacturer, or approved equivalent:
5. Specified Glazing Tapes and other Accessory manufacturer, or approved equivalent:
   a. TREMCO, Glass Tapes "440 Tape".
   b. Acceptable Alternative Accessory Manufacturer:
      a) ADCO "ADCOSEAL GT-1 or GT-4".

B. Products from other manufacturers not listed must submit in accordance with Specification Section - SUBSTITUTION PROCEDURES.

2.2 MATERIALS

A. General:
   1. All glazing shall comply with all provisions of CBC Chapter 24.
      a. Provide the required strength of glazing to comply with the area limitation set forth in CBC Table 2403.2.1 for individual lites.
   2. Refer to the Glass Schedule of this section for the class of each Glazing Type.
   3. Refer to the Insulating Glazing Panel Schedule of this section for the class of each Insulated Glazing Panel Type.

B. Annealed Float Glass: ASTM C 1036 "Specification for Flat Glass", Type I, and and ASTM C 1048 "Specification for Heat-Treated Flat Glass-Kind HS, Kind FT Coated and Uncoated Glass", Type (transparent glass, flat), Quality q3 (glazing select), of Class indicated.

C. Heat-Treated Float Glass: ASTM C 1048 "Specification for Heat-Treated Flat Glass-Kind HS, Kind FT Coated and Uncoated Glass", Type I (transparent glass, flat), Quality q3 (glazing select), of class, kind and condition indicated.
   1. Fabrication Process: By vertical (tong-held) or horizontal (roller-hearth) process, at manufacturer's option, except provide horizontal process where indicated as tongless or free of tong marks.
   2. Provide Kind HS (Heat-Strengthened) float glass in place of annealed float glass where needed to resist thermal stresses indicated by differential shading of individual glass lites and to comply with glass design requirements.
   3. Uncoated Glass: Comply with the requirements for Condition A.
   4. Coated Glass: Comply with the requirements for Condition C.
   5. Tempered: Provide Kind FT (Fully Tempered) float glass in place of annealed or Kind HS (Heat Strengthened) float glass where safety glass is indicated.

D. Ceramic-Coated Spandrel Glass: ASTM C 1048 "Specification for Heat-Treated Flat Glass-Kind HS, Kind FT Coated and Uncoated Glass", Condition B (spandrel glass, one surface ceramic coated), Type II (tinted flat glass), Quality-Q3, and complying with other requirements specified.
   1. Fallout Resistance: Provide spandrel units identical to those passing the fallout-resistance test for spandrel glass specified in ASTM C 1048 "Specification for Heat-Treated Flat Glass-Kind HS, Kind FT Coated and Uncoated Glass"..

E. Laminated Glass: ASTM C 1172 "Specification for Laminated Architectural Flast Glass", laminated glass indicated and compliance with other requirements specified, and with the following:
   1. Refer to annealed and heat-treated glass requirements relating to properties of glass products comprising laminated glass products.

2. Interlayer: Of material and thickness indicated with a proven record of no tendency to bubble, discolor, or lose physical and mechanical properties after laminating glass lites and installation.
   a. Clear Interlayer: When no color is required, provide clear 0.015" (0.38 mm) polyvinyl butyral interlayer in autoclave with heat plus pressure for glass areas less than 9 sq.ft. For areas larger than 9 sq.ft, provide 0.030" (0.76 mm) interlayer.
3. Laminating Process: Fabricate laminated glass to produce glass free of foreign substances and air or glass pockets as follows:
   a. Laminate lites with interlayer film in autoclave with heat plus pressure.

F. Insulated Glass:

G. Insulated Glazing Panels:

2.3 ACCESSORIES

A. Elastomeric Glazing Sealants:
1. General: Provide products of type indicated, complying with the following requirements:
   a. Compatibility: Select glazing sealants and tapes of proven compatibility with other materials they will contact, including glazing products, seals of insulating glass units, and glazing channel substrates, under conditions of installation and service, as demonstrated by testing and field experience.
   b. Suitability: Comply with sealant and glazing manufacturer's written recommendations for selecting glazing sealants and tapes that are suitable for applications indicated and conditions existing at time of installation.
   c. Colors: Provide color of exposed joint sealants to comply with the following:
      1) Match colors indicated by reference to manufacturer's standard designations.
      2) Provide selections made by Architect from manufacturer's full range of standard colors for products of type indicated.
2. Standard: Provide manufacturer's standard chemically curing, elastomeric sealants of base polymer indicated that comply with ASTM C 920 "Specification for Elastomeric Joint Sealants", requirements indicated in Specification Section - SEALANTS, including those referencing ASTM classifications for Type, Grade, Class and Uses.

B. Glazing Sealants for Fire-Rated Glazing Products:
1. Products that are approved by testing agencies that listed and labeled fire-resistant glazing products with which they are used for applications and fire-protection ratings indicated.

C. Glass Tapes:
1. Back-Bedding Mastic Glazing Tape: Preformed, butyl-based elastomeric tape with a solids content of 100 percent, non-staining and non-migrating in contact with nonporous surfaces, with or without spacer rod as recommended in writing by tape and glazing manufacturers for application indicated, packaged on rolls with a release paper backing, and complying with ASTM C 1281 "Specification for Preformed Tape Sealants for Glazing Applications", and AAMA 800 "Voluntary Specifications and Test methods for Sealants" for products indicated below:
   a. AAMA Section 807.3 tape, for glazing applications in which tape is not subject to continuous pressure.

D. Miscellaneous Glass Materials:
   1. General: Provide products of material, size, and shape complying with referenced glazing standard, requirements of manufacturers of glass and other glass materials involved for glass application indicated, and with a proven record of compatibility with surfaces contacted in installation.
   2. Cleaners, Primers and Sealers: Type recommended by sealant or gasket manufacturer.
   3. Setting Blocks: Elastomeric material with a Shore Type A durometer hardness of 85 plus or minus 5.
   4. Spacers: Elastomeric blocks or continuous extrusions with a Shore Type A durometer hardness required by glass manufacturer to maintain glass lites in place for installation indicated.
   5. Edge Blocks: Elastomeric material of hardness needed to limit glass lateral movement (side-walking).
   6. Plastic Foam Joint Fillers: Pre-formed, compressible, resilient, nonstaining, nonextruding, nonoutgassing, strips of closed-cell plastic foam of density, size, and shape to control sealant depth and otherwise contribute to produce optimum sealant performance.
   7. Perimeter Insulation for Fire-Resistive Glass: Identical to product used in test assembly to obtain fire-resistive rating.

2.4 FABRICATION

A. Fabricate glass and other glass products in sizes required to glaze openings indicated for Project, with edge and face clearances, edge and surface conditions, and bite complying with written instruction and recommendations of product manufacturer and referenced glazing standard, to comply with system performance requirements.

B. Clean cut or flat grind vertical edges of butt-glazed monolithic lites in a manner that produces square edges with slight kerfs at junctions with indoor and outdoor faces.

C. Grind smooth and Polish exposed glass edges and corners.

PART 3 - EXECUTION

3.1 EXAMINATION

A. Site verification of conditions:
   1. Prior to the execution of the work under this specification section, inspect the installed work executed under other sections of this Project Manual which affect the execution of work under this specification section.
      a. Examine glass framing, with glazier present, for compliance with the following:
         1) Manufacturing and installation tolerances, including those for size, squareness, offsets at corners.
         2) Presence and functioning of weep system for aluminum framing systems, and proper sealing of hollow metal frame systems with no weep systems.
         3) Minimum required face or edge clearances.
         4) Effective sealing between joints of glass-framing members.

2. Report unacceptable conditions to the Architect. Do not begin work until unacceptable conditions have been corrected.
3. Execution of work under this specification section shall constitute acceptance of existing conditions.

3.2 PREPARATION

A. Coordination:
1. Coordinate work under this specification section with work specified under other sections to ensure proper and adequate interface of work.

B. Protection:
1. Protect all adjacent surfaces from drips, spray, air pollution of surrounding environment, and other damage from work under this specification section.

C. Surface preparation:
1. Prepare surface in accordance with manufacturer's written instructions and recommendations.
2. Clean substrates of substances (oil, grease, rolling compounds, incompatible primers, loose mill scale, etc.) which could impair bond of materials specified within this section.
3. Clean glass channels and other framing members receiving glass immediately before glazing.
4. Remove coatings that are not firmly bonded to substrates.
5. Wipe down any mirror backing with alcohol before applying mirror adhesives.

3.3 INSTALLATION

A. Glass, General:
1. Comply with installation standards of CBC Chapter 24.
   a. Glass subject to human impact shall be installed in accordance with CBC 2406.
2. Comply with combined written instructions and recommendations of manufacturers of glass, insulated glass panels, sealants, gaskets, and other glass materials, except where more stringent requirements are indicated, including those in referenced glazing publications.
3. Glass channel dimensions, as indicated on Drawings, provide necessary bite on glazing, minimum edge and face clearances, and adequate sealant thicknesses, with reasonable tolerances. Adjust as required by Project conditions during installation.
4. Protect glass from edge damage during handling and installation as follows:
   a. Use a rolling block in rotating glass units to prevent damage to glass corners. Do not impact glass with metal framing. Use suction cups to shift glass units within openings; do not raise or drift glass with a pry bar. Rotate glass lites with flares or bevels on bottom horizontal edges so edges are located at top of opening, unless otherwise indicated by manufacturer's label.
   b. Remove damaged glass from Project site and legally dispose of off site. Damaged glass is glass with edge damage or other imperfections that, when installed, weaken glass and impair performance and appearance.
5. Apply primers to joint surfaces where required for adhesion of sealants, as determined by preconstruction sealant-substrate testing.

6. Install setting blocks in sill rabbets, sized and located to comply with referenced glazing standard, unless otherwise required by glass manufacturer. Set blocks in thin course of compatible sealant suitable for heel bead.
7. Do not exceed edge pressures stipulated by glass manufacturers for installing glass lites.
8. Provide spacers for glass sizes larger than 50 united inches (length plus height) as follows:
    a. Locate spacers inside, outside, and directly opposite each other. Install correct size and spacing to preserve required face clearances, except where gaskets and glass tapes are used that have demonstrated ability to maintain required face clearances and comply with system performance requirements.
    b. Provide 3.0mm (1/8" nom.) minimum bite of spacers on glass and use thickness equal to sealant width. With glass tape, use thickness slightly less than final compressed thickness of tape.
9. Provide edge blocking to comply with requirements of referenced glazing publications, unless otherwise required by glass manufacturer.
10. Set glass lites in each series with uniform pattern, draw, bow, and similar characteristics.

B. Tape Glazing:
1. Position tapes on fixed stops so that when compressed by glass their exposed edges are flush with or protrude slightly above sight-line of stops.
    a. Slightly recess tape at exterior conditions, and continuusly cap bead with elastomeric sealant leaving no open joints.
2. Install tapes continuously but not in one continuous length.
    a. Do not stretch tapes to make them fit opening.
3. Where framing joints are vertical, cover these joints by applying tapes to heads and sills first and then to jambs.
4. Where framing joints are horizontal, cover these joints by applying tapes to jambs and then to heads and sills.
5. Place joints in tapes at corners of opening with adjoining lengths butted together, not lapped.
6. Do not remove release paper from tape until just before each lite is installed.
7. Seal joints in tapes with compatible sealant approved by tape manufacturer.
    a. Apply continuous heal bead of elastomeric sealant at all exterior hollow metal framing stops.
    b. Install a continuous toe bead of elastomeric sealant at all exterior hollow metal framing stops on installations with Laminated Glass, Wire Glass or Insulated Glazing Panels.
    c. Apply continuous cap bead of elastomeric sealant over exposed edge of tape.
8. Install tapes on all fixed and loose stops.

C. Sealant glazing (Wet):
1. Install continuous spacers between glass lites and glass stops to maintain glass face clearances and to prevent sealant from extruding into glass channel weep systems (if any) until sealants cure.
    a. Secure spacers in place and in position to control depth of installed sealant relative to edge clearance for optimum sealant performance.
2. Force sealant into glass channels to eliminate voids and to ensure complete wetting or bond of sealant to glass and channel surfaces.
3. Tool exposed surfaces of sealants to provide a substantial wash away from glass.
    a. Install pressurized gaskets to protrude slightly out of channel to eliminate dirt and moisture pockets.

3.4 CLEANING

A. Clean in accordance with Specification Section - PROJECT CLOSEOUT.
   1. Wash glass on both faces in each area of Project not more than 4 days prior to date scheduled for inspections that establish date of Substantial Completion.
      a. Wash glass as recommended in writing by glazing manufacturer.

3.5 PROTECTION

A. Protection from traffic:
   1. Provide final protection and maintain conditions, in a manner acceptable to manufacturer and installer, which ensures the work of this section being without damage or deterioration until the time of Substantial Completion.
   2. Protect exterior glass from breakage immediately after installation by attaching crossed streamers to framing held away from glass.
      a. Do not apply markers to glass surface.
      b. Remove nonpermanent labels, and clean surfaces.
   3. Protect glass from contact with contaminating substances resulting from construction operations including weld splatter.
      a. If, despite such protection, contaminating substances do come into contact with glass, remove them immediately as recommended in writing by glass manufacturer.
   4. Examine glass surfaces adjacent to or below exterior concrete and other masonry surfaces at frequent intervals during construction, but not less than once a month, for build-up of dirt, scum, alkali deposits, or stains, and remove as recommended in writing by glass manufacturer.
   5. Remove and replace glass that is broken, chipped, cracked, abraded, or damaged in any way, including natural causes, accidents and vandalism, during construction period.

3.6 SCHEDULES

A. Glass Schedule:

B. "G" -- Gray Tinted Glass:
   1. G-1-- "MIDNIGHT GRAY FLOAT", manufactured by GUARDIAN SUNGUARD:
      a. Thickness6.00 mm (Approx. 1/4" nominal).
      b. Minimum Visible Light (%) Transmittance 9.
      c. Solar Heat Gain Coefficient (SHGC) 0.35.
      d. "U" Factor:
         1) Winter Night-time 1.03
         2) Summer Daytime 0.93
   2. G-1T -- Tempered "MIDNIGHT GRAY FLOATI", manufactured by GUARDIAN SUNGUARD:
      a. Thickness6.00 mm (Approx. 1/4" nominal).
      b. Minimum Visible Light (%) Transmittance 9.
      c. Solar Heat Gain Coefficient (SHGC) 0.35.
      d. "U" Factor:
         1) Winter Night-time 1.03
         2) Summer Daytime 0.93

3. G2-2-- "MIDNIGHT GRAY FLOAT", manufactured by GUARDIAN SUNGUARD:
   a. Thickness24.70 mm (Approx. 1" nominal).
   b. Insulated Glazing Unit System:
      1) Outdoor Lite: MIDNIGHT GRAY FLOAT
      2) Interspace: 1/2 Inch.
         a) Spacer Material: Manufactuer's standard
         b) Content: Air
      3) Indoor Lite: 1/4" Clear Float
   c. Minimum Visible Light (%) Transmittance 8.
   d. Solar Heat Gain Coefficient (SHGC) 0.22.
   e. "U" Factor:
      1) Winter Night-time 0.47.
      2) Summer Daytime 0.50.
4. G2-2T -- Tempered MIDNIGHT GRAY FLOAT, manufactured by GUARDIAN SUNGUARD.
   a. Thickness24.70 mm (Approx. 1 nominal).
   b. Insulated Glazing Unit System:
      1) Outdoor Lite: TEMPERED MIDNIGHT GRAY FLOAT
         a) Heat Treated, per ASTM C1048 Kind FT
      2) Interspace: 1/2 Inch.
         a) Spacer Material: Manufactuer's standard
         b) Content: Air
      3) Indoor Lite: TEMPERED Clear Float
         a) Heat Treated, per ASTM C1048 Kind FT
   c. Minimum Visible Light (%) Transmittance 8.
   d. Solar Heat Gain Coefficient (SHGC) 0.22.
   e. "U" Factor:
      1) Winter Night-time 0.47
      2) Summer Daytime 0.50

C. "C" -- Clear Float Glass:
1. C1-1 -- Clear Float, Class 1, manufactured by GUARDIAN SUNGUARD:
   a. Thickness6.00 mm (Approx. 1/4" nominal).
   b. Minimum Visible Light (%) Transmittance 89.
   c. Solar Heat Gain Coefficient (SHGC) 0.81.
   d. "U" Factor:
      1) Winter Night-time 1.03
      2) Summer Daytime 0.93
2. C1-1T -- Tempered Clear Float, Class 1, manufactured by GUARDIAN SUNGUARD:
   a. Thickness6.00 mm (Approx. 1/4" nominal).
   b. Minimum Visible Light (%) Transmittance 89.
   c. Solar Heat Gain Coefficient (SHGC) 0.81.
   d. "U" Factor:
      1) Winter Night-time 1.03
      2) Summer Daytime 0.93
3. C2-2 -- Heat Strengthened, Clear Float + Clear Float, manufactured by GUARDIAN SUNGUARD:
   a. Thickness25.00 mm (1" nominal).
   b. Insulated Glazing Unit System:
      1) Outdoor Lite: 1/4" HS Clear Float
         a) Heat Treated, per ASTM C1048 Kind HS

b) Surface #2 Coating SN 54

2) Interspace: 1/2 Inch.

a) Spacer Material: Manufactuer's standard

b) Content: Air

3) Indoor Lite: 1/4" HS Clear Float

a) Heat Treated, per ASTM C1048 Kind HS

c. Visible Light Transmittance 54

d. Solar Heat Gain Coeffiecient (SHGC) 0.28

e. "U" Factor:

1) Winter Night-time 0.29

2) Summer Daytime 0.27

4. C2-2T -- Tempered Clear Float + Clear Float, manufactured by GUARDIAN SUNGUARD:

a. Thickness25.00 mm (1" nominal).

b. Insulated Glazing Unit System:

1) Outdoor Lite: 1/4" Clear Float

a) Heat Treated, per ASTM C1048 Kind FT

b) Surface #2 Coating SN 54

2) Interspace: 1/2 Inch.

a) Spacer Material: Manufactuer's standard

b) Content: Air

3) Indoor Lite: 1/4" Clear Float

a) Heat Treated, per ASTM C1048 Kind FT

c. Visible Light Transmittance 54

d. Solar Heat Gain Coeffiecient (SHGC) 0.28

e. "U" Factor:

1) Winter Night-time 0.29

2) Summer Daytime 0.27

D. "M" -- Mirrored Glass:

E. "FRS" -- Fire-Rated Safety Glass:

F. "L" -- Laminated Glass:

G. "T" -- "GREEN" Tinted Glass:

H. "TR" -- "GREEN" Tinted / Reflective Glass:

I. "WS" -- Fire-Rated Safety Rated Wire Glass:

END OF SECTION

SECTION 092400 – CEMENT PLASTER

PART 1 - GENERAL

1.1 SUMMARY

A. This Section includes the following:
   1. Provide all material, labor, equipment and services necessary to completely install all Cement Plaster materials, accessories and other related items necessary to complete the Project as indicated by the Contract Documents.

B. Related Sections: The following Project Manual Sections contain requirements that relate to this section:
   1. ALL DIVISION 00 SPECIFICATION SECTIONS
   2. ALL DIVISION 01 SPECIFICATION SECTIONS
   3. 03 30 00 CAST-IN-PLACE CONCRETE
   4. 04 22 00 CONCRETE MASONRY UNITS
   5. 06 10 00 ROUGH CARPENTRY
   6. 05 12 00 STEEL AND FABRICATIONS
   7. 05 33 00 METAL DECK
   8. 07 21 00 INSULATION
   9. 07 60 00 SHEET METAL
   10. 07 92 00 SEALANTS
   11. 08 11 00 METAL DOORS AND FRAMES
   12. 08 31 13 ACCESS DOORS AND FRAMES
   13. 09 30 00 TILE
   14. 09 50 00 ACOUSTICAL CEILINGS
   15. 09 65 10 RESILIENT BASE AND ACCESSORIES
   16. 09 91 00 PAINTING
   17. 10 05 00 MISCELLANEOUS SPECIALTIES
   18. 10 14 00 IDENTIFYING DEVICES
   19. 10 21 13 TOILET PARTITIONS
   20. 10 28 13 TOILET ACCESSORIES
   21. 10 44 00 FIRE PROTECTION SPECIALTIES
   22. ALL SPECIFICATION SECTIONS IN THE FACILITY SERVICES SUBGROUP.

1.2 REFERENCES

A. Standards:
   1. In accordance with the following standards:
      a. AAMA American Architectural Manufacturers Association
      b. ASTM American Society of Testing Materials
      c. FS Federal Specification
      d. ML/SFA Metal Lath / Steel Framing Association - a Division of NAAMM.
      e. NAAMM National Association of Architectural Metal Manufacturers.
      f. PDSM Plaster and Drywall Systems Manual, ©1988 by BNI and McGraw-Hill, Inc., Third Edition.
      g. SSMA Steel Stud Manufacturer’s Association.

1.3 SUBMITTALS

A. Submit in accordance with Specification Section - SUBMITTAL PROCEDURES:
1. Product Data:
a. Manufacturer's Data for each type of product specified.
b. Submit manufacturer’s standard color range for selection by the Architect.
c. Manufacturer's full color range (including any standard, premium and custom colors) of integral color plaster mixes for selection.
d. Manufacturer's ICC ES Evaluation Reports (ESR) for fasteners as required.
2. Shop Drawings:
a. Show location of all metal accessories: expansion joints, control joints, casing beads, corner reinforcements, separation screeds and reglets.
b. Provide installation details of flashings at various types of penetrations, all metal accessories, metal lath, and integration with other related work.
3. Samples:
a. 24 inch square field sample of each Cement Plaster Finish prepared on rigid backing for selection.
1) Cement Plaster Finish of each pattern and texture selected prior to paint coat.
2) Cement Plaster Finish of each pattern and texture for each color with type of paint coating selected. Coordinate with Specification Section – PAINTING.
b. 6 inch lineal samples of each piece of specified Metal Accessory material as required for the project.
4. Quality Assurance/Control:
a. Installer's experience.
b. Manufacturer's certification of Installers.
c. Manufacturer's installation instructions.
d. Water Tightness Test Reports.
e. Manufacturer's Field Reports:
1) Confirm mixing and installation procedures of proprietary mixes for all coats of the cement plaster system were within manufacturers requirements.
f. Tension Testing Reports.
5. Closeout Submittals in accordance with the following:
a. In accordance with Specification Section - PROJECT CLOSEOUT.
b. Warranty in accordance with Specification Section – WARRANTIES.

1.4 QUALITY ASSURANCE

A. Qualifications:
1. Material Qualifications:
a. Proprietary systems data sheets shall include design properties of each product.
2. Installer Qualifications:
a. Installer shall be experienced and shall have successfully completed three (3) projects of similar scope and size to that indicated for this Project.
b. Shall participate in a mock-up installation that was successfully tested for water tightness.

c. Manufacturer of proprietary products shall provide written certification that the Installer is qualified to install manufacturer's systems in accordance with manufacturer's warranty requirements.

3. Manufacturer/Supplier Qualifications:
   a. Firm experienced in successfully producing/supplying products similar to that indicated for this Project, with sufficient production/supply capacity to produce/supply required units without causing delay in the work.

B. Regulatory Requirements:
   1. In accordance with Specification Section – REGULATORY REQUIREMENTS, and the following:
      a. CARB Materials and equipment used for this Project shall comply with the current applicable regulations of the California Air Resources Board (CARB) and the Environmental Protection Agency (EPA), in the area where the project is located.

C. Field Samples:
   1. Provide Field Samples for approval prior to the application of the cement plaster coats.
   2. Field Samples shall be panels of a complete installation, representing each of the finish textures and colors from the approved submittal samples.
      a. The field samples shall be done by the installers for the project.
      b. The approved field samples shall establish the acceptable standards for all subsequent work.
   3. When it is the Contractor's intent to incorporate the approved sample panels into the finish Project, the panels shall be located in an area relatively obscured from general view.

D. Mock-Ups:
   1. Provide mock-up panels prior to application of cement plaster work and prior to installation of any exterior wall cavity and interior materials.
   2. Mock-Up Assemblies:
      a. Mock-Ups shall be at exterior wall assemblies and shall integrate all other related work assemblies, including but not limited to, each type of wall openings, wall/eave interface, wall sill, parapet cap, various types of penetrations, material transitions and shall be representative of the intended end-use configuration.
         1) Mock-Ups shall be a minimum overall size of 10'-0" wide x 8'-0" high.
      b. Mock Ups will be used for establishing construction sequence, installation requirements of materials, and creating water tight assemblies without the cement plaster coats.
      c. Mock Ups may become part of the completed Work upon successful testing for water tightness.
   3. Installation:
      a. The Project Inspector, the Architect, Contractor’s Superintendent and Sub-contactor’s Superintendent shall observe the installation of materials.
      b. Installation crew for the Mock-Ups shall be the installers of the Cement Plaster Systems for this project and installers, as necessary, of other related work assemblies.
      c. Mock Ups shall include the installation of water barriers, penetration flashing, Metal Accessories, Metal Lath, and other related work flashings and materials.
      d. Failed Mock Ups shall be removed and the assembly reinstalled until the water tightness test is successful.

E. Meetings:
1. Pre-Installation: Scheduled by the Contractor prior to the start of work.
   a. Coordinate the work with all other related work.
   b. Identify any potential problems that may impede planned progress and proper installation of work regarding quality of installation and warranty requirements.
2. Progress: Scheduled by the Contractor during the performance of the work.
   a. Review for proper installation of work progress.
   b. Identify any installation problems and acceptable corrective measures.
   c. Identify any measures to maintain or regain project schedule if necessary.
3. Completion: Scheduled by the Contractor upon proper completion of the work.
   a. Inspect and identify any problems that may impede issuance of warranties or guaranties.
   b. Maintain installed work until the Notice of Substantial Completion has been executed.

1.5 DELIVERY, STORAGE, AND HANDLING

A. Packing, shipping, handling, and unloading:
1. Products shall be handled in such a manner as to assure that they are free from dents, scratches and other damage.

B. Acceptance at Site:
1. Products must be in manufacturer's original unopened containers with labels indicating brand name, model, and grade.
2. Damaged products will not be accepted.

C. Storage and protection:
1. Store materials inside and under cover on a level platform, six (6) inches above ground, to allow air circulation.
   a. Keep dry and protected against damage from weather, direct sunlight, surface contamination, corrosion, construction traffic and other causes.

1.6 PROJECT CONDITIONS

A. Environmental requirements:
1. Temperature: No plastering shall be done under unsuitable conditions of weather or temperature.
   a. Exterior: No plastering shall be done when prevailing temperature is 40 degrees F. or less for the preceding 24 hours prior to plastering, during the plaster operations, and for at least 48 hours after the set of each plaster coat.
      1) Apply and cure plaster to prevent plaster drying out during the curing period. Use procedures required by climatic conditions, including moist curing, providing coverings, and providing barriers to deflect sunlight and wind.
   b. Factory-Prepared Finishes: Comply with manufacturers written recommendations for the environmental conditions for application of finishes.

B. Existing Conditions:

1. Examine site and compare it with the drawings and specifications. Thoroughly investigate and verify conditions under which the work is to be performed. No allowance will be made for extra work resulting from negligence or failure to be acquainted with all available information concerning conditions necessary to estimate the difficulty or cost of the work.

1.7 WARRANTY

A. Contractor's General Warranty:
   1. In accordance with Specification Section - WARRANTIES.

B. Manufacturer’s Warranty:
   1. In accordance with manufacturer's written standard warranty:
      a. Warranty Period One (1) Year.

C. Installer's Warranty:
   1. In accordance with the terms of the Specification Section - WARRANTIES:
      a. Warranty period One (1) Year.

PART 2 - PRODUCTS

2.1 MANUFACTURERS

A. These products listed herein establish the size, pattern, color range and function selected by the Architect for this Project. Manufacturers that are listed as acceptable alternative manufacturers and substitutions must still comply with the requirements of this project and the products listed in order to be approved as an equivalent during the Submittal Process. If the acceptable alternative manufacturers listed or substitutions are not approved during the Submittal Process due to non-compliance with the contract documents, then the Contractor shall submit product specified.
   1. Water Barriers:
      a. Building Wrap (also qualifies as an "Air Barrier"):
         1) DuPONT COMPANY.
         2) TYPAR.
      b. Sealing Tape:
         1) DuPONT COMPANY.
         2) Acceptable alternative manufacturers:
            a) CANTECH INDUSTRIES.
            b) 3M COMPANY.
            c) TYPAR.
      c. Building Paper:
         1) FORTIFIBER CORP.
   2. Penetration Flashing:
      a. GRACE CONSTRUCTION PRODUCTS.
      b. Acceptable alternative manufacturers:
         1) FORTIFIBER.
   3. Expanded Metal Lath:
      a. CLARK DIETRICH BUILDING SYSTEMS, LLC (CDBS).
      b. Acceptable alternative manufacturers:

1) ALABAMA METAL INDUSTRIES CORPORATION (AMICO).
2) CEMCO.

4. Wire Fabric Lath :
   a. Woven Wire Fabric Lath:
      1) GEORGETOWN WIRE COMPANY
      2) Acceptable alternative manufacturers:
         a) DAVIS WIRE COMPANY.
         b) JAENSON WIRE COMPANY.
   b. Welded Wire Fabric Lath:
      1) STRUCTA WIRE COMPANY, INC.
5. Security Metal Lath:
   a. ALABAMA METAL INDUSTRIES CORPORATION (AMICO).
6. Metal Accessories:
   a. Galvanized Metal Plaster Accessories:
      1) CLARK DIETRICH BUILDING SYSTEMS, LLC (CDBS).
      2) STOCKTON PRODUCTS (SP).
      3) Acceptable alternative manufacturers:
         a) ALABAMA METAL INDUSTRIES CORPORATION (AMICO).
         b) CEMCO.
   b. Aluminum Plaster Accessories:
      1) FRY REGLET CORPORATION.
      2) Acceptable alternative manufacturers:
         a) FLANNERY, INC.
         b) PITTCON.
   c. Fastener:
      1) FLANNERY, INC.
7. Lath Fasteners:
   a. Screw Anchors:
      1) POWERS FASTENERS"TAPPER +".
8. Furring Wads for Screws:
   a. FLANNERY TRIM INC. "FURRING WADS".

B. Products from other manufacturers not listed must submit in accordance with Specification Section – SUBSTITUTION PROCEDURES.

2.2 MATERIALS

A. Furring:
   1. Cold Rolled Channels: 16 gage minimum galvanized steel.
      a. 3/4 inch x 1/2 inch flange, 300 lbs./1000 lineal feet weight.
      b. 1-1/2 inch x 17/32 inch flange, 500 lbs./1000 lineal feet weight.

B. Cement Plaster System:
   1. Line Wire: Galvanized steel wire, in accordance with ASTM A 641 "Specification for Zinc-Coated (Galvanized) Carbon Steel Wire".
      a. Minimum 18 gage (0.0475 inch).
   2. Water Barriers: Water-Resistive Barriers shall be in accordance with CBC Sections 1404.2 and 2510.6:

a. Building Wrap (also qualifies as an "Air Barrier"): Woven and non-woven polyolefin sheets approved per ICC ES Reports for Water-Resistive Barriers for buildings of any construction type and equivalent to Grade D paper with 60 minute water-resistant rating.
   1) "Tyvek® Commercial Wrap" by DuPONT COMPANY.

b. Sealing Tape (3" wide minimum):
   1) "Tyvek® Housewrap Tape" by DUPONT COMPANY.
   2) Accceptable alternative manufacturer:
      a) "Clipper Tape" by CANTECH IND.
      b) "8086 Construction Sheathing Tape" by 3M.

c. Building Paper:
   1) Number 15 Asphalt-Saturated felt complying with Type I felt in accordance with ASTM D226 "Standard Specification for Asphalt-Saturated Organic Felt Used in Roofing and Waterproofing".
   2) Asphalt-Saturated Kraft Waterproof Building Paper approved per ICC ES Reports for Water-Resistive Barriers for buildings of any construction type and equivalent to Grade D paper with 60 minute water-resistant rating.

3. Penetration Flashing: Self-adhered and self-healing weather barrier strips, in accordance with FS UU-B-790a, Grade A.
   a. 40 mil. minimum thickness, in 9-inch and 12-inch widths as is appropriate for barrier application.
      1) "VYCOR V40" by GRACE CONSTRUCTION PRODUCTS.
      2) Acceptable alternative manufacturer:
         a) "Fort-I-Flash 40" by FORTIFIBER
         b) "FlexWrap" and "StraightFlash" by TYVEK.

4. Metal Accessories: Zinc Alloy, Aluminum or Hot-Dipped Galvanized Steel, G-60 minimum (Coordinate depth of trim and accessories with the thicknesses and number of plaster coats).
   a. Control Joints:
      1) 28 gage galvanized steel, depth as required, AMICO No. "GripLock J Control Joint".
   b. Casing Bead:
      1) 26 gage galvanized steel, 1-1/2" x depth as required, CDBS No. 66, Short Flange Casing Bead.
   c. Corner Reinforcement:
      1) Outside Reinforcements:
         a) 26 gage galvanized steel, depth as required, CDBS #1A, Expanded Flange.
      2) Inside Joints:
         a) 28 gage galvanized steel, depth as required, CDBS #30 Construction Control Joint.
   d. Drip Mold:
      1) 24 gage galvanized steel, 2-3/4" x depth as rquired, SP BSS Blind Spot #10 Drip.
   e. Vents:
      1) 26 gage galvanized steel, 3" x depth as required, SP SBS Bug Stop Vent.
      2) 26 gage galvanized steel, 3" x depth as required, SP SES Ember Stop Soffit Vent.
   f. Foundation Sill Screed: 3-1/2 inch minimum vertical attachment flange per CBC Section 2512.1.2.

1) 26 gage galvanized steel, 3-1/2" x depth as required, CDBS #FHA7 Foundation Sill Screed, with weep holes.

g. Weep Screed:
1) 26 gage galvanized steel, 1-1/2" x depth as required with weep holes, CDBS #66 Short Flange Casing Bead, with weep holes.

h. Special Trim Shapes, minimum 0.025 extruded aluminum alloy 6063:
1) Channel Screeds, Reveal Moldings, & Screeds by FRY REGLET:
a) Provide specific shaps as shown on the Drawings.
b) Provide manufacturer's standard channel screed "+", "T", "L", and "corners", factory fabricated intersections as required for channel screeds, reveal moldings and screeds.
c) Provide manufacturer's standard flashing connectors between straight runs and intersections.
d) Butt Joints shall be flush and align with other metal accessories.
e) Provide End Caps compatible for all channel screeds, reveal moldings, and screeds that terminate at opening frames and other construction.
f) All finishes shall be "Special Anodic Coating," clear color.

i. Single Point Separation Screed:
1) 26 gage galvanized steel, Expanded Metal Base x depth as required, SP PBS Pointed Base Screed with Keyholes.

j. Stucco Reglet: 26 gage galvanized steel:
1) 2-1/2-inch flange by FRY REGLET "STX" Series.
2) 1-3/4 inch flange by FRY REGLET "ST" Series.
3) Accessories: Factory manufactured mitered and sealed corners, and polyvinyl chloride "Vinylok" flashing retainer clips.

5. Metal Lath:
a. Expanded Metal Lath: Galvanized steel in accordance with ASTM C 847 "Standard Specification for Metal Lath."
1) "Diamond Mesh" Lath, 3.4 pounds per square yard.
2) "Hi Rib" Lath, 3/8 inch rib, 3.4 pounds per square yard.
3) "Self-Furred Diamond Mesh" Lath, 3.4 pounds per square yard.

b. Wire Fabric Lath:
1) Woven: Galvanized steel in accordance with ASTM C 1032, "Specification for Woven Wire Plaster Base," and ASTM C 1066, "Specification for Installation of Lath and Furring to Receive Interior and Exterior Portland Cement-Based Plaster".
a) 1-1/2 inch x 17 gage (0.0540 inch) hexagon shaped mesh, 1.86 lbs. per square yard.
b) "Paper Backed" Woven Wire Fabric Lath and "Self-Furring" Woven Wire Fabric Lath are not acceptable.
2) Welded: Galvanized steel in accordance with ASTM C 933, "Specification for Welded Wire Lath," and ASTM C 1066, "Specification for Installation of Lath and Furring to Receive Interior and Exterior Portland Cement-Based Plaster".
a) 1-1/2 inch x 1-1/2 inch x 16 gage (0.0625 inch) square shaped mesh, 1.14 lbs. per square yard.
b) "Paper Backed" Welded Wire Fabric Lath is not acceptable.
c) "Self-Furring" Welded Wire Fabric Lath without paper backing shall be acceptable.

c. Security Metal Lath:

1) High Strength Low Alloy (HSLA) carbon steel sheet, 63 percent open area, 171 lbs. per 100 sq.ft. uncoated.
a) "Security Mesh ASM 75-9F" by AMICO.

6. Cement Plaster:
a. Cement: Type I or II Portland Cement
1) In accordance with ASTM C 150 "Standard Specification for Portland Cement."
b. Plastic Cement: Type M or S.
1) In accordance with ASTM C 1328 "Standard Specification for Plastic (Stucco) Cement."
c. Miracle Lime: Type S.
1) In accordance with ASTM C 206 Standard Specification for Finishing Hydrated Lime."
d. Sand: Clean and washed sand complying with ASTM C 897 “Standard Specification for Aggregate for Job-Mixed Portland Cement-Based Plasters."
1) Grading:

CUMULATIVE WEIGHT PERCENT RETAINED:

U.S. STANDARD SIEVE	MINIMUM	MAXIMUM
No. 4	--	0
No. 8	0	10
No. 16	10	40
No. 30	30	65
No. 50	70	90
No. 100	95	100
No. 200	97	100

2) Finish Coat Sand: Washed, white silica sand, a.k.a. "Monterey Sand."
e. Surface Applied Liquid Bonding Agent: Resinous emulsion with the following minimum requirements:
1) Minimum tensile strength of 60 psi.
2) Minimum compressive shear strength of 300 psi.

7. Elastomeric Finish Coat:
a. Primer/base coat:
1) "WEATHERPRIME" as manufactured by DRYVIT.
b. Finish coat:
1) "WEATHERLASTIC Sandpebble Fine" as manufactured by DRYVIT.
a) Factory-formulated, integral color, 100 percent acrylic, "Dirt Pickup Resistant" chemistry, elastomeric binder for bridging hairline cracks.
b) Coverage: Not greater than 150 sq.ft. per 7 lb pail.
c) Accelerated Weathering: No deleterious effects after 5,000 hours continuous exposure in accordance with ASTM G 26 "Standard Practice for Operating Light-Exposure Apparatus (Xenon-Arc Type) With and Without Water for Exposure of Nonmetallic Materials."
d) Resistance to wind-driven rain: Passes in accordance with FederalTest Method TT-C-555 B.
e) Resistance to Salt Spray: No deleterious effects after 500 hours continuous exposure in accordance with ASTM B 117 "Standard Practice for Operating Salt Spray (Fog) Apparatus."
f) Mildew Resistance Passes in accordance with Military Standard 810B.
g) Fungal Resistance: Passes in acccorance with Federal Test Method 141, and Method 6271.

h) Elongation: 450 percent elongation at break in accordance with ASTM D 412 "Standard Test methods for Vulcanized Rubber and Thermoplastic Elastomers – Tension."
i) Tensile Strength: 100 psi @ 72 deg. F, 488 psi @ 0 deg. F in accordance with ASTM D 412 "Standard Test methods for Vulcanized Rubber and Thermoplastic Elastomers – Tension."
j) Flexibility: Passes - no cracking, 1/8" dia. mandrel, 180 deg. bend, done at -30 deg. F in accordance with ASTM D 522 "Standard Test Method for Mandrel Bend Test of Attached Organic Coatings."
k) Water Vapor Transmission: 15 perms @ 10 mils dry film thickness, Free film, dried 21 days @ 73 deg. F., 50 percent R.H.; Water Method: 50 percent R.H. @ 72 deg. F., non-inverted cup (Method B), in accordance with ASTM E 96 "Standard Test Methods for Water Vapor Transmission of Materials."
l) Adhesion to Concrete: 125 psi at failure end point, Pull-off test dried 21 days @ 72 deg. F., 50 percent R.H. in accordance with ASTM D 4541 "Standard Test Method for Pull-Off Strength of Coatings Using Portable Adhesion Testers."
m) Impact Resistance: 98 inch pounds at failure end point in accordance with ASTM D 2794 "Standard Test Method for Resistance of Organic Coatings to the Effects of Rapid Deformation (Impact)."
n) Shore A Hardness: 70, 20 mils dry film thickness, dried 21 days @ 72 deg. F., 55 percent R.H. in accordance with ASTM D 2240 "Standard Test Method for Rubber Property – Durometer Hardness."
o) Flame Spread: Class 1, in accordance with ASTM E 84 "Standard Test Method for Surface Burning Characteristics of Building Materials."

c. Color and Texture:
1) As selected by the Architect from the manufacturer's standard, premium, and custom color palette, and texture finish.

2.3 ACCESSORIES

A. Fasteners: Shall be in accordance with ASTM C 1063, "Standard Specification for Installation of Lathing and Furring to Receive Interior and Exterior Portland Cement-Based Plaster".
1. Staples: 16 gage, galvanized steel.
a. In accordance with ASTM E1667 "Standard Specification for Driven Fasteners, Nails, Spikes and Staples."
b. Provide 1/4 inch furring wads at staple attachments for lath.
2. Nails: galvanized steel.
a. In accordance with ASTM E1667 "Standard Specification for Driven Fasteners, Nails, Spikes and Staples."
b. Minimum, 7/16 inch (0.437 inch) diameter head and 11 gage (0.1205 inch) barbed, roofing or common nails.
c. Provide 1/4 inch furring wads at nail attachments for lath.
d. Tie Nails: 10d galvanized nails.
e. Concrete Stub Nails: Corrosion Resistant.
1) Minimum, 3/8 inch wide head.
3. Screws at Wood Framing: Corrosion Resistant.

a. In accordance with ASTM C 1002, "Specification for Steel Self-Piercing Tapping Screws for the Application of Gypsum Panel Products or Metal Plaster Bases to Wood Studs or Steel Studs."
   1) Minimum 7/16 inch (0.437 inch) diameter pan wafer head and a 0.163 inch (#8) diameter shank with sharp-point.
b. Provide 1/4 inch furring wads at screw attachments for lath.

4. Screws at Metal Framing: Corrosion Resistant.
   a. In accordance with ASTM C 954, "Specification for Steel Drill Screws for the Application of Gypsum Panel Products or Metal Plaster Bases to Steel Studs from 0.033 in. to 0.122 in. in Thickness."
      1) Minimum 7/16 inch (0.437 inch) diameter pan wafer head and 0.163 inch (#8) diameter shank with self-drilling and self-tapping point.
   b. Provide 1/4 inch furring wads at screw attachments for lath.
5. Power or Powder Actuated Fasteners:
   a. In accordance with ASTM E 488 "Standard Test Methods for Strength of Anchors in Concrete and Masonry Elements."
   b. Size: min. 3/8 inch wide heads with 0.145 inch shank diameter, in length as required to achieve specified penetration.
   c. Corrosion Resistant.
6. Screw Anchor Fasteners:
   a. In accordance with ASTM E 488 "Standard Test Methods for Strength of Anchors in Concrete and Masonry Elements."
   b. In accordance with valid ICC ESR testing applicable to installation conditions.
   c. Size: 3/16 inch diameter, in length as required to achieve specified penetration.
   d. Corrosion Resistant.
   e. Accessories for Screw Anchor Fasteners:
      1) Matched tolerance drill bit, dust removal device, and other accessories in accordance with written manufacturer's instructions and ICC ES Evaluation Report.
7. Wires:
   a. Galvanized (Class 1 zinc coating) soft temper steel wire, in accordance with ASTM A 641, "Specification for Zinc-Coated (Galvanized) Carbon Steel Wire."
   b. All wire diameters specified are uncoated and corresponds with United States Steel Wire Gauge (USSWG):
      1) Member to Member: Minimum 16 gage (0.0625 inch).
      2) Lath to Support Member: Minimum 18 gage (0.0475 inch).
      3) Lath to Metal Accessories: Minimum 18 gage (0.0475 inch).
      4) Lath to Lath: Minimum 18 gage (0.0475 inch).

B. Open Corner Reinforcement:
   1. Cement Plaster: Expanded Metal Lath, AMICO "Cornalath" galvanzied steel.

2.4 MIXES

A. Cement Plaster Mixes: Shall be in accordance with ASTM C 926, "Specification for Application of Portland Cement-Based Plaster."
   1. Scratch Coat Mix (No additions of plasticizing agents allowed):
      a. One half part Common Cement.
      b. One half part Plastic Cement.
      c. Four parts Sand.

2. Brown Coat Mix (No additions of plasticizing agents allowed):
   a. One half part Common Cement.
   b. One half part Plastic Cement.
   c. Five parts Sand.
3. Finish Coat Mix:
   a. Exterior Cement Plaster (No additions of plasticizing agents allowed):
      1) One part Common Cement.
      2) One part Miracle Lime.
      3) Three parts Finish Coat Sand.
         a) Sieve Size: (20 - 60).

PART 3 - EXECUTION

3.1 EXAMINATION

A. Site verification of conditions:
   1. Prior to the execution of the work under this specification section, inspect the installed work executed under other sections of this Project Manual, which affect the execution of work under this specification section.
   2. Report unacceptable conditions to the Architect. Do not begin work until unacceptable conditions have been corrected.
   3. Execution of work under this specification section shall constitute acceptance of existing conditions.

3.2 PREPARATION

A. Coordination:
   1. Coordinate work under this specification section with all related work specified under other sections to ensure proper and adequate interface of work.
      a. Verify and locate framing and or backing necessary for proper installation of cement plaster system.
   2. Integrate Water barriers and Penetration Flashing with all flashings from all other related work for proper shedding of water out of the building.
   3. Protection:
   4. Project Inspector shall verify that all stud cavity walls are free of moisture and dry prior to any other construction that fully closes the wall cavity.
   5. Protect all adjacent surfaces from drips, spray, air pollution of surrounding environment, and other damage from work under this specification section.
      a. Provide temporary protections and enclosures for other work.

B. Surface preparation:
   1. Prepare surface in accordance with manufacturer's written instructions and recommendations.
   2. Clean substrates of substances (oil, grease, rolling compounds, incompatible primers, loose mill scale, etc.) which could impair bond of materials specified within this section.

3.3 INSTALLATION

A. General:
1. It is the intent to provide a weather resistant exterior plaster system envelope upon completion.
   a. Overlap and shingle fashion all substrate barriers, papers and penetration flashing with accessories in such a way as to shed water at the midpoint flashing (i.e. floor juncture flashing, or head flashing at openings and penetrations), or allow it to weep to drainage weep holes at the foundation sill screed in accordance with the requirements of the CBC Section 1403, 1404.2, and 1405.3.
2. In accordance with ASTM C 1063, "Standard Specification for Installation of Lathing and Furring to Receive Interior and Exterior Portland Cement-Based Plaster" and ASTM C 926, "Application of Portland Cement-Based Plaster."
   a. In accordance with CBC Chapter 7, Chapter 7A, Chapter 14, and Chapter 25.
   b. In accordance with listed UL Assemblies at designated fire rated assemblies.
   c. In accordance with "The Plaster and Drywall Systems Manual" (PDSM).
   d. In accordance with Regulatory Requirements.

B. Layout:
   a. Set plumb, level, and square.
   b. Lines of all Metal Accessories shall be straight and true. Set accessories to create a cement plaster finish plane within a tolerance of 1/8 inch in 10 feet.
   c. Apply all Brown and Finish Coats of plaster to create a finish plane with a tolerance of 1/8 inch in 10 feet.

C. Furring:
1. Install at Custom Steel Fabricated Toilet Partitions as indicated.

D. Installation of Line Wire:
1. Apply Line Wire prior to the placement of the water barriers.
2. Line Wire shall be installed at open framing of exterior vertical assembly.
3. Install Line Wire perpendicular to the framing members at 6” on center and secured to every fourth framing member with a screw.
   a. Stretch Line Wire sufficiently tight to minimize bulging of the Water Barriers and to ensure a uniform thick scratch coat.

E. Installation of Water Barriers:
1. Install Water Barriers after installation of Line Wire at open framing.
2. Water barriers shall be installed at all exterior walls, exterior soffits, and at interior walls considered to be "Semi-Wet" and "Wet" exposures (i.e. Toilets, Showers, Lockers, Kitchens and etc.).
3. Install Water Barriers with Penetration Flashing, Metal Accessories, and all other related work in "shingle" or "weatherboard" fashion.
4. Water Barriers shall be installed as required in CBC Sections 1404.2, 1405, and 2510.6 as follows:
   a. Provide two layers of Water Barriers.
      1) One inner layer of Building Wrap (also qualifies as an "Air Barrier"):
         a) Seal all laps and penetrations with a 3" wide minimum Sealing Tape.
      2) One outer layer of Building Paper.

b. The Water Barrier shall be applied horizontally, with the upper layer lapped over the lower layer not less than 6 inches and free from holes and breaks.
   1) Where vertical joints occur, barrier shall be lapped not less than 6 inches.
c. Exposure:
   1) Maximum exposure of Water Barriers shall be 30 days prior to plaster application or less as required by Water Barrier Manufacturer.
      a) Protect Water Barriers from the elements (both exposure to the sun and water) with a temporary 6-mil visqueen barrier or other material approved by the barrier manufacturer.

F. Installation of Penetration Flashing:
1. Apply Penetration Flashing in conjunction with Water Barriers, Metal Accessories and all other related work.
2. Install Penetration Flashing at all openings and penetrations at all exterior walls and at interior walls considered to be "Semi-Wet" and "Wet" exposures (i.e. Toilets, Showers, Lockers, Kitchens, etc.).
3. Install Penetration Flashings with Water Barriers, Metal Accessories and all other related work in "shingle" or "weatherboard" fashion.
4. Penetration Flashings shall be installed as required in CBC Sections 1405.3 in 9" widths and continuous to 9" past all intersections around all openings, penetrations and termination of plaster systems.
   a. Should any penetration warrant a greater width of wall flashing, provide 12" wide flashing as required.
   b. When an object extends through the Cement Plaster System, return the edge of the Penetration Flashing 1" and apply to the sides of the penetrating item.
5. Objects such as electrical back-boxes, electrical speaker enclosures, penetrations created by structural members, and the like.

G. Installation of Metal Accessories:
1. Apply Metal Accessories in conjunction with Water Barriers, Penetration Flashings and all other related work.
2. Install Metal Accessories as required to delineate cement plaster work into areas of the following maximum size and shall be in addition to locations shown on the drawings:
   a. Vertical surfaces 144 sq.ft.
   b. Horizontal and other non-vertical surfaces 100 sq.ft.
   c. Length-to-width ratios of not greater than 2-1/2:1.
   d. Distances not greater than 18 feet.
3. Install Metal Accessories with Water Barriers, Penetration Flashing Sheets and all other related work in "shingle" or "weatherboard" fashion.
4. Install all Metal Accessories in accordance with manufacturer's instructions, and the PDSM.
   a. All Metal Accessories shall be fully supported in accordance with CBC, secure flanges to framing.
   b. Installed in 10 foot lengths wherever possible.
   c. All joints (butt, mitered, bent, continuing around corners, or changing directions) shall be cut accurately, welded, or folded, sealed, pop-riveted and sealed again, for a watertight joint.
      1) Special Trim Shapes joints (butt, "T", "+", "L" and inside/outside intersections) provide manufacturer’s flashing connectors and factory fabricated intersections to connect shapes.

a) Provide End Caps at all open ends and when terminated at opening frames and all other construction.
b) Butt Joints shall be flush and align with other metal accessories.
c) Seal all intersections and ends.

2) Maintain the water barrier continuously behind any joint.
3) Joints shall occur at nearest possible expansion or control joints.

d. When an object extends through the Cement Plaster System, accurately cut and install in "shingle" or "weatherboard" fashion the Metal Accessories around the penetration. Apply sealant between the metal accessories and the penetrating object.

5. Metal Accessories shall be attached to framing members at maximum 7 inches o.c. along supports.
   a. Single Point Separation Screeds can be wire tied over Metal Lath.
   b. Where dissimilar metals come into surface contact provide electrolytic protection between dissimilar metals using neoprene, plastic sheet, EPDM rubber or other protective coating.

H. Installation of Metal Lath:
1. General:
   a. Install the various types of Metal Lath at the following conditions:
      1) Diamond Mesh Lath at horizontal and vertical surfaces over open framing members at 16 inches on center.
      2) Hi Rib Lath at horizontal and vertical surfaces over open framing members at 24 inches on center.
2. Wood Frame Construction:
   a. Horizontal Framing:
      1) Roofing nails driven flush with the plaster base providing not less than 3/4-in. penetration into framing members when lath is installed.
         a) Nail attachments at Hi-Rib Lath to provide not less than 1-3/4 inch penetration into framing members when lath is installed and shall be bent over ribs.
      2) Screws shall penetrate not less than 5/8-inch into framing members when lath is installed and shall engage not less that three strands of lath.
         a) Screw attachments at Hi-Rib Lath shall pass through, but not deform rib.
      3) Where Water Barriers are not required, either of the following attachments shall be used in addition to the methods of attachment set forth in CBC Table No. 2507.2 per CBC Section 2507.3:
         a) Secure lath to alternate supports with ties consisting of a double strand of No. 18 W & M gage (0.475 inch) galvanized annealed wire at one edge of each sheet of lath. Wire ties shall be installed not less than 3 inches back from the edge of each sheet and shall be looped around stripping, or attached to an 8d common wire nail driven into each side of the joist 2 inches above the bottom of the joist or to each end of a 16d common wire nail driven horizontally through the joist 2 inches above the bottom of the joist and the ends of the wire secured together with three twists of the wire.

b) Secure lath to each support with 1/2 inch wide, 1-1/2 inch long No. 9 W & M gage (0.1483 inch), ring shank, hook staple placed around a 10d common nail laid flat under the surface of the lath not more than 3 inches from edge of each sheet. Such staples may be placed over ribs of 3/8 inch rib lath or over back wire of welded wire fabric or other approved lath, omitting the 10d nails.

b. Vertical Framing:

1) Common nails or roofing nails driven to penetration of not less that 3/4 inch into framing members when lath is installed and shall be bent over to engage not less than three strands of lath.

a) Nail attachments at Hi-Rib Lath shall be bent over ribs.

2) Screws shall penetrate not less than 5/8 inch into framing members when lath is installed and shall engage not less than three strands of lath.

a) Screw attachments at Hi-Rib Lath shall pass through, but not deform rib.

3. Metal Framed Construction:

a. Horizontal Framing:

1) Screws shall project not less than 3/8-in. through metal framing member when the lath is installed and shall engage not less than three strands of lath.

a) Screw attachments at Hi-Rib Lath shall pass through, but not deform rib.

2) Where Water Barriers are not required, securely attach to metal framing members with No. 18 gage (0.0475 inch) wire ties, clips, hog rings or approved equivalent attachments.

a) Securely attach Hi-Rib Lath to open-web steel joists by single ties of galvanized, annealed steel wire not less than No. 18 gage (0.0475 inch), with the ends of each tie twisted together 1-1/2 times.

b. Vertical Framing:

1) Screws shall project not less than 3/8-in. through metal framing members when the lath is installed. and shall engage not less than three strands of lath.

a) Screw attachments at Hi-Rib Lath shall pass through, but not deform rib.

2) Where Water Barriers are not required (Interior Walls), securely attach to metal framing members with No. 18 gage (0.0475 inch) wire ties, clips, hog rings or approved equivalent attachments.

4. Concrete Substrates, Horizontal and Vertical:

a. Install power driven or power actuated fasteners:

1) Penetration, min.: 3/4 inch.

2) Location: One fastener at each corner, and one fastener at midpoint of long dimension of lath sheet. Balance of locations may be same fasteners or hardened concrete stub nails.

3) Spacing:

a) Horizontal (row), max.: 16 inches on center.

b) Vertical (column), max: 7 inches on center.

5. Masonry Substrates, Vertical:

a. Install screw anchor fasteners per ICC ES Evaluation Report installation requirements.

1) Penetration: 1-1/2 inch.

2) Spacing:

a) End distance, min.: 3 inches.

b) Edge distance, min.: 1-1/2 inch.
c) Any direction, min.: 1-1/2 inch.
3) Pattern Spacing:
b. Horizontal (row), max: 16 inches.
c. Vertical (column), max: 7 inches.
6. Attach accessories in such a manner as to ensure proper alignment during plaster application.
7. Installation of Security Metal Lath:
a. Install Security Metal Lath for Custom Steel Fabricated Metal Toilet Partitions.
b. Weld Security Metal Lath to cold rolled channels as detailed on the drawings.
1) Security Metal Lath end joints shall be butted and occur over studs; edge joints shall be butted and wire tied between supports.

I. Cement Plaster Installation:
1. Nominal Cement Plaster Thickness over Metal Lath:
a. At open framing and sheathing substrates, Vertical and Horizontal Surfaces: 7/8" nominal.
1) Scratch Coat thickness: 3/8"
2) Brown Coat thickness: 3/8"
3) Finish Coat thickness: 1/8"
b. At concrete or masonry substrates, Vertical and Horizontal Surfaces 7/8" nominal.
1) Scratch Coat thickness: 1/2"
2) Brown Coat thickness: 1/4"
3) Finish Coat thickness: 1/8"
2. Nominal Cement Plaster Thickness over Concrete or Masonry Substrates:
a. Masonry Vertical Surfaces: 1/2" nominal.
1) Bond Coat: N/A
2) Brown Coat thickness 3/8"
3) Finish Coat thickness 1/8"
b. Masonry Horizontal Surfaces: 3/8" nominal.
1) Bond Coat: N/A
2) Brown Coat thickness 1/4"
3) Finish Coat thickness 1/8"
c. Concrete Vertical and Horizontal Surfaces: 3/8" nominal.
1) Bond Coat: N/A
2) Brown Coat thickness 1/4"
3) Finish Coat thickness 1/8"
d. Where the installed plaster thickness over masonry will exceed the nominal 1/2 inch thickness, the plaster system shall be the three coat application over self-furred expanded metal lath.
e. Where the installed plaster thickness over concrete will exceed the nominal 3/8 inch thickness, the plaster system shall be the three coat application over self-furred expanded metal lath.
3. Scratch Coat Installation:
a. Cover Lath totally and completely with Scratch Coat Mix.
b. Finish: Heavily scratched at right angles to framing members to provide strong mechanical key for Brown Coat.
c. Curing: Continuously moist cure a minimum of 48 hours immediately after installation and prior to application of Brown Coat.
4. Bond Coat Installation:

a. Apply "Surface Applied Liquid Bonding Agent" Mix solid over masonry or concrete and fill all pores completely to form bonding, water resistant finish.
b. Cure: In accordance with Manufacturer's requirements and ASTM C 932 "Specification for Surface-Applied Bonding Compounds for Exterior Plastering".

5. Brown Coat Installation:
   a. Apply Brown Coat Mix to slightly damp, and cured Scratch Coat.
   b. Finish: Dry rod to a straight even plane.
   c. Float to densify at 1/8 inch in 10 feet and leave rough for finish.
      1) At exterior horizontal soffits with recessed light fixtures, provide a smooth and level brown coat finish around the perimeter of the light fixture housing.
         a) After installation of the brown coat, knock down any ridges and provide a smooth trowel finish within a distance of 3 inches around the light fixture housing. This level of finish is required, so that the light fixture lens (with a compression gasket) can be installed with full contact against the plaster system.
         b) Coordinate with the electrical contractor and obtain a sample fixture lens, and conduct a pre-cement plaster installation meeting to discuss this topic.
   d. Curing: Continuously moist cure a minimum of 48 hours immediately after installation and dry cure a minimum of 7 days, allow time for plaster to shrink prior to application of finish coats.
6. Finish Coat Installation:
   a. Exterior Cement System:
      1) Provide Open Corner Reinforcement where cement plaster is not divided or separated at opening corners. Place diagonally at all corners of openings and apply with cement adhesive on cured Brown Coat.
      2) Apply 2 coats of Finish Coat Mix.
         a) First coat 1/16 inch minimum. Completely cover to create a bond with Brown Coat.
         b) Second coat 1/16 inch minimum. Apply immediately after first coat and when first coat is dry using a plaster mix of thinner consistency. Apply to create depth for texture and uniformity.
         c) Use proportionately more atomizing air at the gun nozzle.
      3) Texture: "Light Dash" finish as indicated in the current "Plaster and Drywall Systems Manual."
         a) Texture to be "Medium Dash" finish when application of paint finish coats to be an "Elastomeric" Paint System.
      4) Curing: Continuously moist cure a minimum of 48 hours immediately after installation and dry cure a minimum of 7 days to allow time for plaster to shrink prior to installation of paint finish coats.

3.4 REPAIR / RESTORATION

A. Repair or replace work to eliminate cracks, dents, blisters, buckles, crazing and check cracking, dry outs, efflorescence, sweat outs, and similar defects and where bond to substrate has failed.

3.5 FIELD QUALITY CONTROL

A. General: Comply with ASTM C 926 "Standard Specification for Application of Portland Cement-Based Plaster."
   1. Do not deviate more than plus or minus 1/8 inch in 10 feet from a true plane in finished plaster surfaces, as measured by a 10-foot straightedge placed on surface.
   2. Finish plaster flush with metal frames and other built-in metal items or accessories that act as a plaster ground, unless otherwise indicated. Where casing bead does not terminate plaster at metal frame, cut base coat free from metal frame before plaster sets and groove finish coat at junctures with metal.
   3. Provide plaster surfaces that are ready to receive field-applied finishes indicated.

B. Site Tests:
   1. As required by Regulatory Requirements.
   2. Mock-Up Assemblies:
      a. Water Spray Test: Upon completion of the installation of the Mock-Up Assembly, conduct test for water penetration in according to AAMA 501.2 requirements.
         1) The Project Inspector, the Architect, Contractor’s Superintendent and Sub-contactor’s Superintendent shall visually inspect for water penetration.
         2) A Thermal Imagining process conducted by the Owner's Testing Laboratory Service, shall be used for additional inspection for water penetration.
         3) Cost of additional testing and inspection required due to failure for water tightness shall be borne by the Contractor.
      b. Reports:
         1) Project Inspector and/or Owner's Testing Laboratory Services shall provide a written report noting the installation and water tightness of the Mock-Up Assemblies tested.

C. Inspection:
   1. As required by Regulatory Requirements and in accordance with CBC Section 2503.
   2. Schedule inspections and notify the Architect, Project Inspector and any other regulatory agencies of the time at least 48 hours prior to the inspection.
   3. No work shall be without the inspections required by Regulatory Requirements.

3.6 CLEANING

A. Clean in accordance with Specification Section – PROJECT CLOSEOUT.
   1. Clean any soiled surfaces immediately.
   2. Finish shall be clean and ready for the application of any additional finishes.
   3. In accordance with manufacturer’s written instructions and recommendations.

B. Remove temporary protection and enclosure of other work.

C. Promptly remove plaster from door frames, window and other surfaces not indicated to be plastered.

D. Repair floors, walls and other surfaces stained, marred or other wise damaged during plastering

END OF SECTION

SECTION 092900 – GYPSUM BOARD

PART 1 - GENERAL

1.1 SUMMARY

A. This Section includes the following:
   1. Provide all material, labor, equipment and services necessary to completely install all gypsum board materials, suspension systems, furring, accessories and other related items necessary to complete the Project as indicated by the Contract Documents.

B. Related Sections: The following Project Manual Sections contain requirements that relate to this section:
   1. ALL DIVISION 00 SPECIFICATION SECTIONS.
   2. ALL DIVISION 01 SPECIFICATION SECTIONS.
   3. 04 22 00 CONCRETE MASONRY UNITS
   4. 06 10 00 ROUGH CARPENTRY
   5. 06 41 23 MODULAR CASEWORK
   6. 07 21 00 INSULATION
   7. 07 92 00 SEALANTS
   8. 08 11 00 METAL DOORS AND FRAMES
   9. 08 14 16 WOOD DOORS
   10. 08 31 13 ACCESS DOORS AND FRAMES
   11. 09 30 00 TILE
   12. 09 50 00 ACOUSTICAL CEILINGS
   13. 09 65 10 RESILIENT BASE AND ACCESSORIES
   14. 09 65 16 RESILIENT SHEET
   15. 09 67 23 RESINOUS FLOORING
   16. 09 68 40 CARPET
   17. 09 72 00 WALL COVERINGS
   18. 09 91 00 PAINTING
   19. 10 05 00 MISCELLANEOUS SPECIALTIES
   20. 10 11 00 VISUAL DISPLAY BOARDS
   21. 10 14 00 IDENTIFYING DEVICES
   22. 10 21 13 TOILET PARTITIONS
   23. 10 26 00 WALL AND CORNER GUARDS
   24. 10 28 13 TOILET ACCESSORIES
   25. 10 44 00 FIRE PROTECTION SPECIALTIES
   26. ALL SPECIFICATION SECTIONS IN THE FACILITY SERVICES SUBGROUP.

1.2 REFERENCES

A. Standards:
   1. In accordance with the following standards:
      a. CISCA Ceilings & Interior Systems Construction Association.
      b. DITF Drywall Industry Trust Fund.
      c. GA Gypsum Association.
      d. MPI Master Painters Institute

e. PDCA Painting and Decorating Contractors of America.
f. PDSM Plaster and Drywall Systems Manual, ©1988 by BNI and McGraw-Hill, Inc., Third Edition.

1.3 SYSTEM DESCRIPTION

A. Suspension System Design Requirements: In accordance with allowable values and properties assigned and approved by CBC.
1. Lateral Load Design: ASCE 7, Chapter 13.
2. Design Weight for lateral loads: Total Weight does not exceed four (4) pounds per square foot, including air conditioning grilles and light fixtures.
3. System is not to support lateral loads from partitions.
4. Fasteners into concrete:
   a. Must be capable of sustaining, without failure, a load equal to 200 lbs. tension for hangar wires and 440 lbs. tension for bracing wires.
5. Gypsum board suspended ceiling systems shall not support materials or building components other than grills, light fixtures, small electrical conduits, small ducts and the like.
   a. All such components shall be supported either directly from main runners, or by supplemental framing, which is supported by main runners.
   b. No vertical loads other than gypsum board dead load shall be applied to cross-furring.

1.4 SUBMITTALS

A. Submit in accordance with Specification Section - SUBMITTAL PROCEDURES:
1. Product Data.
   a. Gypsum board fastening schedule: Indicate type, size and spacing of fasteners for each type of framing and fire resistive condition.
   b. Manufacturer's written recommended construction instructions or handbook for all gypsum board panel products and accessories.
   c. Manufacturer's written recommended construction instructions or handbook for all suspension system products and accessories
   d. Manufacturer's data for all types of gypsum board used on this project.
2. Samples.
   a. Provide 24 inch square samples for all textures for each level of finish.
   b. Provide 4 inch lineal samples of each piece of metal trim accessory specified.
   c. Provide 12 inch lineal samples of Suspension System components for each type of system specified.
3. Quality Assurance/Control Submittals:
   a. Test Reports:
      1) Site Tests of suspended gypsum board ceiling fasteners and anchors provided by Testing Agency.
   b. Certificates:
      1) General Construction: Certificate signed by the Contractor on Contractor's letterhead.
      2) Products: Certificates signed by manufacturers of gypsum board assembly components.
4. Closeout Submittals in accordance with Specification Section -PROJECT DOCUMENTS.

a. Warranty in accordance with Specification Section - WARRANTIES.

1.5 QUALITY ASSURANCE

A. Qualifications:
1. Material Qualifications:
a. Where fire-rated gypsum board assemblies are indicated, provide materials and construction identical to those of assemblies tested for fire resistance per ASTM E 119 "Test methods for Fire Tests of Building Construction and Materials", by an independent testing and inspecting agency acceptable to CSFM.
b. Empty containers shall not be removed from site without the Project Inspector's approval.
2. Installer Qualifications:
a. Engage an experienced Installer who has successfully completed three (3) projects of similar scope and size to that indicated for this Project.
1) Helpers and apprentices used for such work shall be under full and constant supervision at all times by thoroughly skilled gypsum board installers.
2) In the acceptance or rejection of installed gypsum board, no allowance will be made for lack of skill on the part of installers.

B. Regulatory Requirements:
1. In accordance with Specification Section - REGULATORY REQUIREMENTS, and the following:
a. CARB Materials and equipment used for this Project shall comply with the current applicable regulations of the California Air Resources Board (CARB) and the Environmental Protection Agency (EPA), in the area where the project is located.
b. IR Interpretation of Regulations.

C. Certificates:
1. General Construction: Contractor to certify that work provided, meets or exceeds the requirements of this section.
2. Manufacturers of gypsum board assembly components certify that their products comply with specified requirements.
a. Certify that all adhesive and compound materials have a good shelf life longer than the construction period of this project.

D. Mockups:
1. Before starting the finishing of gypsum board surfaces, install mockups of at least 100 sq. ft. in surface area to demonstrate aesthetic effects and qualities of materials and execution.
a. Install mockups for the following applications:
1) All surfaces without finish texture.
2) All surfaces without finish texture to be painted.
3) All surfaces with finish texture to be painted.
b. Simulate finished lighting conditions for review of mockups.
c. Approved mockups may become part of the completed Work if undisturbed at time of Substantial Completion.

E. Meetings:
1. Pre-Installation: Scheduled by the Contractor prior to the start of work.

a. Coordinate the work with other work being performed.
b. Identify any potential problems that may impede planned progress and proper installation of work regarding quality of installation and warranty requirements.

2. Progress: Scheduled by the Contractor during the performance of the work.
   a. Review for proper installation of work progress.
   b. Identify any installation problems and acceptable corrective measures.
   c. Identify any measures to maintain or regain project schedule if necessary.
3. Completion: Scheduled by the Contractor upon proper completion of the work.
   a. Inspect and identify any problems that may impede issuance of warranties or guaranties.
   b. Maintain installed work until the Notice of Substantial Completion has been executed.

1.6 DELIVERY, STORAGE, AND HANDLING

A. Packing, shipping, handling, and unloading:
   1. Products shall be handled in such a manner as to assure that they are free from dents, scratches and other damage.

B. Acceptance at Site:
   1. Products must be in manufacturer's original unopened containers with labels indicating brand name, model, and grade.
   2. Damaged products will not be accepted.

C. Storage and protection:
   1. Products shall be stored above ground on level platforms, six (6) inches above ground, allowing air circulation under stacked units.
      a. Cover materials with protective waterproof covering providing for adequate air circulation and ventilation.

1.7 WARRANTY

A. Contractor's General Warranty:
   1. In accordance with Specification Section - WARRANTIES.

B. Manufacturer’s Warranty:
   1. In accordance with manufacturer's written standard warranty:
      a. Warranty Period One (1) Year.

C. Installer's Warranty:
   1. In accordance with the terms of the Specification Section - WARRANTIES:
      a. Warranty period One (1) Year.

PART 2 - PRODUCTS

2.1 MANUFACTURERS

A. These products listed herein establish the size, pattern, color range and function selected by the Architect for this Project. Manufacturers that are listed as acceptable alternative manufacturers and substitutions must still comply with the requirements of this project and the products listed in order to be approved as an equivalent during the Submittal Process. If the acceptable alternative manufacturers listed or substitutions are not approved during the Submittal Process due to non-compliance with the contract documents, then the Contractor shall submit product specified.

1. Specified gypsum board products manufacturer:
   a. NATIONAL GYPSUM COMPANY.
      1) Wallboard "REGULAR".
      2) Water-Resistant "XP GYPSUM BOARD".
      3) Shaftwall "SHAFTLINER".
      4) Sheathing "GYPSUM SHEATHING".
      5) Soffit "EXTERIOR SOFFIT BOARD".
   b. Acceptable alternative manufacturers:
      1) PABCO:
         a) Wallboard "REGULAR" AND "TYPE X".
         b) Water-Resistant "ABUSE CURB".
         c) Shaftwall "MOLD CURB PLUS SHAFTWALL".
         d) Sheathing "GLASS SHEATHING".
         e) Soffit "EXTERIOR SOFFIT".
      2) UNITED STATES GYPSUM COMPANY - "SHEETROCK".
         a) Wallboard "SW EDGE".
         b) Water-Resistant "MOLD TOUGH AR".
         c) Shaftwall "LINER PANEL-MOLD TOUGH".
         d) Sheathing "SECUROCK GLASS-MAT SHEATHING".
         e) Soffit "EXTERIOR GYPSUM CEILING BOARD".
2. Specified Impact and Abuse board products manufacturer:
   a. NATIONAL GYPSUM COMPANY
      1) Impact Board "HI-IMPACT XP"
      2) Abuse Resistant "HI-ABUSE XP"
   b. Acceptable alternative manufacturers:
      1) PABCO.
         a) Impact Board "HI-IMPACT"
         b) Abuse Resistant "ABUSE CURB"
      2) UNITED STATES GYPSUM COMPANY - "SHEETROCK":
         a) Impact Board "MOLD TOUGH VH1".
         b) Abuse Resistant "MOLD TOUGH VH1".
3. Specified Roof Board board products manufacturer:
   a. G-P GYPSUM "DENS-DECK".
   b. Acceptable alternative manufacturers
      1) UNITED STATES GYPSUM COMPANY
         a) SECUROCK Roof Cover Board.
4. Specified gypsum board accessories product manufacturer:

a. Prep. Coat (Drywall Primer):
1) WESTPAC MATERIALS "PREP COAT".
2) Acceptable alternative manufacturer:
a) UNITED STATES GYPSUM - SECUROCK First Coat Primer.
b. Primer-Surfacer: "TUFF-HIDE".
1) UNITED STATES GYPSUM COMPANY.
c. Other Accessories:
1) CLARK DIETRICH BUILDING SYSTEMS, LLC (CDBS).
5. Specified revel molding products manufacturer:
a. FRY REGLET CORPORATION.

B. Products from other manufacturers not listed must submit in accordance with Specification Section - SUBSTITUTION PROCEDURES.

2.2 MATERIALS

A. Furring:
1. Metal Angles: 24 gage galvanized steel.
a. 1-3/8 inch x 7/8 inch 190 lbs./1000 feet weight.
2. Cold Rolled Channels: 16 gage galvanized steel
a. For furred walls and ceilings.
1) 3/4 inch x 1/2 inch flange: 300 lbs./1000 feet weight.
2) 1-1/2 inch x 17/32 inch flange: 500 lbs./feet weight.
3) 2 inch x 17/32 inch flange: 590 lbs./1000 feet weight.
3. Resilient Channels (USG's RC-1): 25 gage corrosion resistant steel.
a. Pre-punched holes at 4 inches on center in the flange to facilitate screw attachment only into framing. For improving sound transmission loss through framed partitions and ceilings.
1) 1/2 inch flange x 2-1/2 inch overall w/1-1/2 inch offset flange x 1/2 inch offset:
a) 200 lbs./1000 feet weight.
4. Zee Channels: 24 gage corrosion resistant steel.
a. 1 inch thick x 7/8 inch x 1-1/4 inch 224 lbs./1000 feet weight.
b. 1-1/2 inch x 7/8 inch x 1-1/4 inch 269 lbs./1000 feet weight.
c. 2 inch x 7/8 inch x 1-1/4 inch 313 lbs./1000 feet weight.
d. 3 inch x 7/8 inch x 1-1/4 inch 400 lbs./1000 feet weight.
5. Hat Channels:
a. 7/8 inch x 2-9/16 inch 276 lbs./1000 feet weight (25 gage).
b. 7/8 inch x 2-9/16 inch 515 lbs./1000 feet weight (20 gage).
6. Channel Clips:
a. Pre-formed galvanized wire used for attaching metal furring channels to cold rolled channels and single gypsum panel systems only.
1) 1-1/2 inch x 2-3/4 inch 38 lbs./1000 feet weight.

B. Suspension System:
1. General: Comply with ASTM C754 "Standard Specification for Installation of Steel Framing Members to Receive Screw-Attached Gypsum Panel Products", for conditions indicated.
2. Wires: ASTM A641 "Standard Specification for Zinc-Coated (Galvanized) Carbon Steel Wire", Class 1 zinc coating, soft temper:

a. Tie: 0.0625 inch diameter wire (16 gage), or double strand of 0.0475 inch diameter (18 gage) wire.
b. Hanger: 0.162 inch diameter (8 gage).
c. Brace: 0.106 inch diameter (12 gage).

3. Anchors:
   a. General: Fabricate from corrosion-resistant material with holes or loops for attaching hanger and brace wires.
      1) Ceiling Clips: 3/4 inch wide x 0.0934 inch galvanized sheet (13 gage).
      2) Steel Straps:
         a) 1 inch wide x length as required x 0.108 inch galvanized sheet (12 gage).
         b) 3 inches wide x 4 inches long x 0.108 inch galvanized sheet (12 gage).
4. Main Runners:
   a. Hot Rolled Channels:
      1) 1-1/2 inch web x 1/2 inch flange x 1/8 inch thick 1,120 lbs./1000 feet weight.
5. Cross Furring:
   a. Hat Channels:
      1) 7/8 inch thick x 2-9/16 inch 276 lbs./1000 feet weight.
6. Compression Struts (Metal angles, galvanized steel):
   a. 1/8 inch thick x 1 inch x 1 inch 800 lbs./1000 feet weight.
   b. 3/16 inch thick x 1-1/4 inch x 1-1/4 inch 1,480 lbs./1000 feet weight.
   c. 3/16 inch thick x 1-1/2 inch x 1-1/2 inch 1,800 lbs./1000 feet weight.
   d. 3/16 inch thick x 1-3/4 inch x 1-3/4 inch 2,120 lbs./1000 feet weight.
   e. 3/16 inch thick x 2 inch x 2 inch 2,440 lbs./1000 feet weight.
   f. 3/16 inch thick x 2 inch x 2-1/2 inch 3,070 lbs./1000 feet weight.
   g. 3/16 inch thick x 3 inch x 3 inch 3,710 lbs./1000 feet weight.
   h. 1/4 inch thick x 3-1/2 inch x 3-1/2 inch 5,800 lbs./1000 feet weight.
   i. 1/4 inch thick x 4 inch x 4 inch 6,600 lbs./1000 feet weight
   j. Alternate Compression Struts Refer to drawings.
      1) Must be submitted to and approved by DSA.
7. Shaft Wall Framing: Shaft Wall Steel Framing listed below are manufactured by USG, or approved equivalent.
   a. CR-Runners:
      1) 2"-width 25 gage.
   b. J-Runners:
      1) 2-1/2", 4" or 6" as required 20 gage.
   c. E-Studs:
      1) 2-1/2", 4" or 6" as required 20 gage.
   d. C-H Studs:
      1) 2-1/2", 4" or 6" as required 20 gage.
   e. Jamb Studs:
      1) 2-1/2", 4" or 6" as required 20 gage.
   f. H-Studs:
      1) 2"-width 25 gage.

C. Wallboard: For interior walls and ceilings.
   1. Standard: In accordance with ASTM C 1396 "Standard Specification for Gypsum Board".
   2. Size: See drawings for specific thickness locations:

a. 5/8 inch thick by 4 foot wide maximum by practical length to minimize joints.
1) When curved walls are indicated on the drawings, provide multiple layers of 1/4 inch & 3/8 inch thick by 4 foot wide maximum by practical length to minimize joints.

3. Long Edges: SW Tapered.
4. Core Type:
a. Non-Fire Rated: Regular.
b. Fire Rated Type X at fire-resistive-rated assemblies.
5. Finish: Natural-finish face paper suitable for paint, wallpaper or other decorations.

D. Impact Board: For interior walls requiring greater impact resistance.
1. Standard: In accordance with ASTM C 1629 "Standard Classification for Abuse-Resistant Nondecorated Interior Gypsum Panel Products and Fiber-Reinforced Cement Panels.
a. Surface Abrasion Resistance: ASTM D 4977 "Test method for Granule Adhesion to Mineral Surfaced Roofing by Abrasion": Level 3.
b. Indentation Resistance: ASTM D 5420 "Test Method for Impact Resistance of Flat, Rigid Plastic Specimen by Means of a Striker Impacted by a falling Weight (Gardner Impact)": Level 1.
c. Impact/Penetration Resistance, Soft Body: ASTM E 695 "Standard Method for Measuring Relative Resistance of Wall, Floor, and Roof Construction to Impact Loading":Level 3.
d. Impact/Penetration Resistance, Hard Body: ASTM C 1629 "Standard Classification for Abuse-Resistant Nondecorated Interior Gypsum Panel Products and Fiber-Reinforced Cement Panels", Annex 1: Level 3.
2. Mold/Mildew Characteristics:
a. Mold Resistance: ASTM G 21 "Standard Practice for Determining Resistance of Synthetic Polymeric Materials to Fungi": 0.
b. Mold Resistance: ASTM D 3273 "Standard Test Method for Resistance to Growth of Mold on the Surface of Interior Coatings in an Environmental Chamber": 10.
c. Water Absorption: ASTM C 173 "Test method for Air Content of Freshly Mixed Concrete by the Volumetric Method": less than 5 percent.
3. Surface Burning Characteristics: ASTM E 84 "Test Method for Surface Burning Characteristics of Building Materials":
a. Flame Spread: 15.
b. Smoke Developed: 0.
4. Size: See Drawings for specific thickness locations:
a. 5/8 inches thick by 4 feet wide maximum by practical length to minimize joints.
5. Long Edges: Tapered.
6. Core Type:
a. Moisture resistant core with an embedded fiberglass mesh.
b. Non-Fire-Rated: --
c. Fire Rated: Type X at fire-resistive-rated assemblies.
7. Finish: Abrasion and mold/mildew/moisture resistant paper on the face side, and abrasion and mold/mildew/moisture resistant paper on the back side.
a. Color of the face paper is dependent on the manufacturer.

E. Abuse Resistant: For interior walls and ceilings requiring greater impact resistance.

1. Standard: In accordance with ASTM C 1629 "Standard Classification for Abuse-Resistant Nondecorated Interior Gypsum Panel Products and Fiber-Reinforced Cement Panels".
   a. Surface Abrasion Resistance: ASTM D 4977 "Test method for Granule Adhesion to Mineral Surfaced Roofing by Abrasion": Level 3.
   b. Indentation Resistance: ASTM D 5420 "Test Method for Impact Resistance of Flat, Rigid Plastic Specimen by Means of a Striker Impacted by a falling Weight (Gardner Impact)": Level 1.
   c. Impact/Penetration Resistance, Soft Body: ASTM E 695 "Standard Method for Measuring Relative Resistance of Wall, Floor, and Roof Construction to Impact Loading":Level 1-2.
2. Mold/Mildew Characteristics:
   a. Mold Resistance: ASTM G 21 "Standard Practice for Determining Resistance of Synthetic Polymeric Materials to Fungi": 0.
   b. Mold Resistance: ASTM D 3273 "Standard Test Method for Resistance to Growth of Mold on the Surface of Interior Coatings in an Environmental Chamber": 10.
   c. Water Absorption: ASTM C 173 "Standard Test Methods for Physical Testing of Gypsum Panel Products": less than 5 percent.
3. Surface Burning Characteristics: ASTM E 84 "Test Method for Surface Burning Characteristics of Building Materials":
   a. Flame Spread: 15.
   b. Smoke Developed: 0.
4. Size: See Drawings for specific thickness locations:
   a. 5/8 inches thick by 4 feet wide maximum by practical length to minimize joints.
5. Long Edges: Tapered.
6. Core Type:
   a. Moisture resistant core.
   b. Non-Fire-Rated: --
   c. Fire Rated: Type X at fire-resistive-rated assemblies.
7. Finish: Abrasion and mold/mildew/moisture resistant paper on the face side, and abrasion and mold/mildew/moisture resistant paper on the back side.
   a. Color of the face paper is dependent on the manufacturer.

F. Water-Resistant: For interior walls subjected to, but not constant, moisture and humidity and at adhesive application of ceramic tile and wallcoverings.
1. Standard: In accordance with ASTM C 1396 "Standard Specification for Gypsum Board".
   a. Surface Burning Characteristics: ASTM E 84 "Test Method for Surface Burning Characteristics of Building Materials":
      1) Flame Spread: 20.
      2) Smoke Developed: 0.
2. Size - see drawings for specific thickness locations:
   a. 5/8 inch thick by 4 foot wide maximum by practical length to minimize joints.
3. Long Edges: Tapered.
4. Core Type:
   a. Non-Fire Rated: Regular water-resistant core all the way through.
   b. Fire Rated: Type X and water-resistant additives all the way through, at fire-resistive-rated assemblies.
5. Finish: Multi-layered paper facings, chemically treated to resist moisture penetration.
   a. Color of the face paper is dependent on the manufacturer.

G. Shaftwall: For interior walls and ceiling at shafts, area separations, high-attenuation, floor/ceiling assemblies, etc.
1. Standard: ASTM C 1396 "Standard Specification for Gypsum Board".
2. Size:
   a. 1 inch thick by 2 foot wide maximum by practical length to minimize joints.
3. Long Edges: Beveled.
4. Core Type:
   a. Fire Rated: Type X at fire-resistive-rated assemblies.
5. Finish:
   a. Multi-layered paper facings, chemically treated to resist moisture penetration.
      1) Color of the face paper is dependent on the manufacturer.

H. Sheathing: For exterior walls.
1. Standard: ASTM C 1177 "Standard Specification for Glass-Mat Gypsum Substrate for use as Sheathing".
   a. Surface Burning Characteristics per ASTM E 84 "Test Method for Surface Burning Characteristics of Building Materials":
      1) Flame Spread: 20.
      2) Smoke Developed: 0.
2. Size:
   a. 5/8 inch thick by 4 foot wide maximum by practical length to minimize joints.
3. Long Edges: "V" Shaped T & G.
4. Core Type:
   a. Non-Fire Rated: Gypsum with Fiberglass face and back.
   b. Fire Rated : Treated Gypsum with fiberglass face and back. at fire-resistive-rated assemblies.
5. Finish Color: Manufacturer's standard.
   a. Color of the face paper is dependent on the manufacturer.

I. Soffit: For exterior soffits with indirect weather exposure.
1. Standard: ASTM C1396 "Standard Specification for Gypsum Board".
   a. Surface Burning Characteristics per ASTM E 84 "Test Method for Surface Burning Characteristics of Building Materials":
      1) Flame Spread: 20.
      2) Smoke Developed: 0.
2. Size:
   a. 5/8 inch thick by 4 foot wide maximum by practical length to minimize joints.
3. Long Edges: SW Tapered.
4. Core Type:
   a. Non-Fire Rated: Regular Gypsum with water-resistant additive treatment.
   b. Fire Rated: Type X with weather resistant additives at fire-resistive-rated assemblies.
      1) Available only in 5/8 inch thickness only.
5. Finish: Water-repellant paper facings.
   a. Color of the face paper is dependent on the manufacturer.

J. Roof Board:
1. Thickness 5/8 inch.
2. Surfacing: Glass Mat.
3. Flute Spanibility:

a. 5/8 inch thick: 8 inches per ASTM E 661 "Test Method for Performance of Wood and Wood-Based Floor and Roof Sheathing Under Concentrated Static and Impact Loads".

4. "R" Value:
   a. 5/8 inch thick: 0.67 per ASTM C 518 “Test Method for Steady-State Thermal Transmission Properties by Means of the Heat Flow Meter Apparatus”.
5. Water Absorption: 10.0
   a. Per ASTM C 473 “Test methods for Physical Testing of Gypsum Panels and Products”.
6. Compression Strength: 500-900 psi normal.
7. Surface Water Absorption: 2.5 grams.
   a. Nominal per ASTM C 473 “Test methods for Physical Testing of Gypsum Panels and Products”.
8. Flame Spread / Smoke Developed Index: 0/0.
   a. Per ASTM E 84 "Test Method for Surface Burning Characteristics of Building Materials".
9. Mold Resistance: No Growth.
   a. Per ASTM D 3273 “Standard Test Method for Resistance to Growth of Mold on the Surface of Interior Coatings in an Environmental Chamber”.

K. Metal Accessories:
1. Corner Beads:
   a. Outside Corner, 1-1/4 inch x 1-1/4 inch galvanized:
      1) CDBS / USG "Dur-A-Bead" #103.
2. Edge Trim:
   a. "U"-Shaped 1 inch galvanized CDBS / USG #200-A, size to fit gypsum board.
   b. "L"-Shaped 1 inch galvanized CDBS / USG #200-B, size to fit gypsum board.
      1) When "U"-Shaped molding above cannot be used.
3. Control Joint:
   a. 1-3/4" wide, 1/4" wide center channel with removable tape strip:
      1) CDBS / USG #093.
4. Reveal Moldings (Aluminum Trim): Moldings listed below are manufactured by FRY REGLETS, or approved equivalent.
   a. Reveal Molding Sized to fit gypsum board.
   b. "L" Trim Molding Sized to fit gypsum board.
   c. "F" Reveal Molding Sized to fit gypsum board.
   d. Snap-In Reveal Sized to fit gypsum board.
   e. "Z" Reveal Molding Sized to fit gypsum board.
   f. Reveal Channel Screed Sized to fit gypsum board.
   g. "F" Reveal Sized to fit gypsum board.
   h. "T" Molding Sized to fit gypsum board.

2.3 ACCESSORIES

A. Water:
1. Clean, fresh and free from deleterious amounts of foreign material.

B. Fasteners:
1. At Gypsum Board: In accordance with the manufacturer's written recommendations and the following:

a. Nails: In accordance with CBC Chapter 7 and ASTM C 514 "Standard Specification for Nails for the Application of Gypsum Board".
b. Screws: In accordance with CBC Chapter 7, ASTM C 1002 "Standard Specification for Steel Self-Piercing Tapping Screws for the Application of Gypsum Panel Products or Metal Plaster Bases to Wood Studs or Steel Studs", type S, G, and W, and ASTM C 954 "Standard Specification for Steel Drill Screws for the Application of Gypsum Panel Products or Metal Plaster Bases to Steel Studs from 0.033 in. (0.84 mm) to 0.112 in. (2.84 mm) in Thickness", Type S-12.
   1) Provide "Bugle Head" screws that help prevent damage to the gypsum core and face paper.
c. Adhesives: In accordance with ASTM C 475 "Standard Specification for Joint Compound and Joint Tape for Finishing Gypsum Board".
   1) Commercial adhesives bridging minor irregularities in the base or framing at "non-fire-rated" construction.
      a) In accordance with ASTM C 557 "Standard Specification for Adhesives for Fastening Gypsum Wallboard to Wood Framing".

2. At Suspension Systems:
   a. Wood Construction:
      1) Eye screws, minimum 1/4 inch diameter, 1-1/4 inch minimum embedment.
      2) Staples, 1-1/2 inch x 0.148 inch diameter (9 gage).
      3) Nails, "STRONGHOLD-J" nails.
   b. Steel Framing:
      1) Shot-in Anchors.
      2) Metal Deck or Metal Deck without Structural Concrete:
      3) Screws, self-tapping, minimum #8 x 1/2 inch.
   c. Metal Deck with Structural Concrete or Structural Concrete:
      1) Drilled-in Anchors, 5/16 inch diameter minimum at hanger and bracing wires.
      2) Shot-in Anchors, 3/4 inch minimum penetration at hanger wires only.

C. Joint reinforcement tape and joint compounds:
   1. In accordance with ASTM C 474 "Standard Test Methods for Joint Treatment Materials for Gypsum Board Construction" and C 475 "Standard Specification for Joint Compound and Joint Tape for Finishing Gypsum Board", and Gypsum Board Manufacturer's written recommendations of both the manufacturers of sheet products and of joint treatment materials for each application indicated.
      a. Joint Tapes:
         1) Paper reinforcing tape, unless otherwise indicated.
         2) Polymer-coated, open glass-fiber mesh for cementitious backer units.
      b. Setting-Type Joint compounds for gypsum board: Factory-packaged, job-mixed, chemical-hardening powder products formulated for uses indicated.
         1) When used for taping and filling only, use formulation that is compatible with other joint compounds applied over it.
         2) When used for pre-filling gypsum board joints, use formulation recommended by gypsum board manufacturer for this purpose.
         3) When used for filling joints and treating fasteners of water-resistant gypsum backing board behind base for ceramic tile, use formulation recommended by the gypsum board manufacturer for this purpose.
         4) When used for topping compound, use sandable formulation.

D. Prep. Coat: Provide a preparation coat of the specified material to gypsum board surfaces to be decorated with all paints.

E. Primer-Surfacer: “TUFF-HIDE” by USG, Interior White Latex High Build Spray for a smoother paint finish over all types of drywall, 9.8 to 13 mils DFT in one spray application

F. Textured Finish Coats: Gypsum Board manufacturer supplying the products to this project shall also supply the Texture Finishes to provide distinctive appearance and surface decoration to gypsum board panel walls and ceilings, and as scheduled at the end of this Specification Section.

G. Other Materials: All other miscellaneous materials, not specifically described, but required for a complete and proper installation of gypsum board, shall be as selected by the Contractor subject to the approval of the Architect.

PART 3 - EXECUTION

3.1 EXAMINATION

A. Site verification of conditions:
1. Prior to the execution of the work under this specification section, inspect the installed work executed under other sections of this Project Manual which affect the execution of work under this specification section.
2. Report unacceptable conditions to the Architect. Do not begin work until unacceptable conditions have been corrected.
3. Execution of work under this specification section shall constitute acceptance of existing conditions.

3.2 PREPARATION

A. Coordination:
1. Coordinate work under this specification section with work specified under other sections to ensure proper and adequate interface of work.
2. Coordinate proper placement of ceiling mounted tracks, accessories, light fixtures, HVAC, registers and other items, which are to be integrated with gypsum board ceilings.

B. Protection:
1. Do not begin work until all rooms have been protected against the weather, and the building is covered and fully enclosed. Wet gypsum board after installation shall be removed and replaced at no extra cost to the Owner.
2. Protect all adjacent surfaces from drips, spray, air pollution of surrounding environment, and other damage from work under this specification section.

C. Surface preparation:
1. Prepare surface in accordance with manufacturer's written instructions and recommendations.
2. Clean substrates of substances (oil, grease, rolling compounds, incompatible primers, loose mill scale, etc.) which could impair bond of materials specified within this section.

3.3 INSTALLATION

A. General:
1. In accordance with manufacturer's written instructions and recommendations unless specifically noted otherwise.
2. In accordance with Regulatory Requirements.
   a. DSA's IR 25-3 "Drywall Ceiling Suspension Conventional Construction-One Layer".
3. Set plumb, level, and square.

B. Layout:
1. Lines shall be straight and true.
2. Control Joints:
   a. Layout in accordance with GA-234-08 for both Non-Rated and Rated wall and ceiling conditions as follows:
      1) Provide Control Joints at in an uninterupted straight plane exceeding 30 ft. in length and total area between control joints, such that no area exceeds 900 sq.ft.

C. Suspension System Installation: In accordance with DSA's IR 25-3.
1. Hanger and Main Runner Installation:
   a. Vertical hanger wires shall be #8 gage and galvanized; use #12 gage wire in "non-accessible" ceiling areas.
   b. Hanger spacing shall be 4'-0" o.c. with 1-1/2 inch hot rolled main runners (weighing 1.12 lbs./ft.).
   c. Bracing assemblies shall not be greater than a 12' by 12' on center spacing.
      1) Provide bracing assemblies at locations not more than 1/2 the spacing given above, from each perimeter wall and at edge of vertical ceiling offsets.
      2) The slope of these wires shall not exceed 45 degrees from the plane of the ceiling and shall be taut. Splices in bracing wires are not to be permitted without special DSA approval.
      3) Ceiling grid members may be attached to not more than two (2) adjacent walls. Ceiling grid members shall be at least 1/2" free of other walls.
      4) If walls run diagonally to ceiling grid system runners, one end of main and cross runners shall be free, and a minimum of 1/2" clear of wall.
      5) Suspended ceiling systems with an area of 144 square feet or less, and fire rated ceiling systems with an area of 96 square feet or less, surrounded by walls which connect directly to the structure above, do not require bracing assemblies when attached to at least two adjacent walls.
   d. Fasten hanger wires with not less than three tight turns.
      1) Fasten bracing wires with not less than four tight turns.
      2) Make all tight turns within a distance of 1-1/2 inches.
      3) Hanger or Bracing Wire anchors to the structure shall be installed in such a manner that the direction of the wire aligns as closely as possible with the direction of the forces acting on the wire.
         a) Wire turns made by machine where both strands have been deformed or bent in wrapping can waive the 1-1/2" requirement, but the number of turns shall be maintained, and be as tight as possible.

4) Separate all ceiling and bracing wires at least six inches (6") from all unbraced ducts, pipes, conduit, etc. It is acceptable to attach lightweight items, such as single electrical conduit not exceeding 3/4" nominal diameter, to hanger wires using connectors acceptable to DSA.

e. Hangers shall be saddle-tied around main runners to develop the full strength of the hangers.

f. Main Runners shall be spliced by lapping and interlocking flanges 12 inches minimum and tying near each end with double loops of #16 gage wire.

g. Provide trapeze or other supplementary support members at obstructions to typical hanger spacing. Provide additional hangers, struts or braces as required at all ceiling breaks, soffits or discontinuous areas. Hanger wires that are more than 1 in 6 out of plumb shall have countersloping wires.

h. All recessed or drop-in light fixtures, as well as ceiling mounted mechanical air terminals and services, shall be supported directly by main runners or by supplemental framing which is supported by main runners and positively attached with screws or other approved connectors.

i. Surface mounted fixtures shall be attached to a main runner with a positive clamping device made of material with a minimum of 14 gage. ROTATIONAL SPRING CLAMPS DO NOT COMPLY.

2. Cross-Furring:

a. Cross-Furring shall be 7/8 inch, 25 gage galvanized hat sections at 24 inches on center maximum.

b. Cross-Furring shall be saddle-tied to the main runners with one strand of #16 gage, or two strands of #18 gage tie wire.

c. Cross-Furring shall be spliced by lapping and interlocking the pieces eight inches minimum and tying near each end with double loops of #16 gage wire.

D. Furring Channels:

1. Attach hat channels at 16" o.c. to framing members at 24" o.c. maximum with one 1-1/2" Type "G" screw at each bearing point. Stagger screws to opposite sides at every bearing surface.

E. Gypsum Board:

1. General:

a. During Winter Weather Installation periods, follow the GA-220 GYPSUM BOARD WINTER RELATED INSTALLATION RECOMMENDATIONS.

2. Install in accordance with CBC Chapter 25, DITF and GA recommendations, gypsum board panel manufacturer's written recommendations and in accordance with fire-rated design numbers.

a. At Ceilings and Soffits:

1) At gypsum board ceilings and soffit areas, install the ceiling prior to installing the walls.

2) Float the interior ceiling angles, and where permitted by code,

b. At Sound and Acoustical Walls:

1) Set all gypsum board panels on each side of the partition in a continuous 1/4 inch bead of acoustical sealant furnished and installed in accordance with the provisions of Specification Section – SEALANTS.

c. At Water Resistant Walls:

1) Install where scheduled and in all areas where high moisture conditions are present, or ceramic tile, or wall coverings are scheduled over gypsum board.

2) In all areas to be tiled, treat all edges, cutouts, utility holes and joints, corners and nailheads with an approved sealant material in lieu of standard taping. Joints not to be covered by tile shall be treated as regular gypsum board. Do not use standard joint compound under ceramic tile.

d. At Sheathing:

1) Screw-attach sheathing to exterior of each stud with 1" Type "S-12" corrosion resistant screws spaced 3/8" from ends and edges and approximately 8" o.c. Apply sealant around sheathing perimeter at interface with other materials and install flashing.

3. Install gypsum board panels horizontally on walls, floor to ceiling.
4. At metal frames terminate wall board panel edge inside frame. Do not terminate gypsum board panel edge against metal frame trim unless otherwise indicated.

F. Cutting:

1. Cut gypsum board panels by scoring and breaking or by sawing, working from the face side.
   a. When cutting by scoring, cut through the face paper and then snap the panel back away from the cut face; then break the backpaper by snapping the panel in the reverse direction or by cutting the back paper.
2. Smooth all cut ends and edges of panels as necessary to obtain a smooth joint.
3. For cut-outs in panels for pipes, fixtures, and other small openings, make holes and cut-outs by sawing or by such other method as will not fracture the core or tear the covering and with such accuracy that plates, escutcheons, or trim will cover the edges.
4. The use of "score-and-knockout" method will not be permitted.

G. Metal Accessories:

1. Corner Beads:
   a. Install at all corners with galvanized screws at nine (9) inch intervals in both flanges with fasteners placed opposite one another the full length of the corner bead. Clinch-on fastening is not allowed.
      1) Fasteners shall be driven below the anticipated finished joint compound surface.
   b. Install in one piece except when length of corner exceeds stock lengths – then put splice up high away from people traffic.
2. Edge Trim: Install at all exposed joints where gypsum board panels abut another material with galvanized screws at nine (9) inch intervals the full length of the edge trim. Clinch-on fastening is not allowed.
   a. Fasteners shall be driven below the anticipated finished joint compound surface.
   b. Provide joint sealer in accordance with Specification Section – SEALANTS.
      1) Provide fire sealant in accordance with Specification Section – FIRSTOPPING or Specification Section – SEALANTS, when the wall or ceiling is part of a fire-rated situation.
3. Control Joints:
   a. Install at 30'-0" o.c. maximum at all interior walls or partitions with uninterrupted planes that exceed 30' in length.
      1) Opening frames that are full height of wall or partition may be considered a control joint.
   b. Install at 50'-0" o.c. maximum at all interior ceilings and shall not exceed 2,500 sq.ft. in total area with perimeter relief.
   c. Install at 30'-0" o.c. maximum at all interior ceilings and shall not exceed 900 sq.ft. in total area without perimeter relief.

H. Fastening:
1. Properly space all fasteners in careful accordance with the manufacturer's written recommendations and code requirements, with heads driven slightly below the surface for proper cementing, but without breaking the paper face.
2. Loosely butt all joints to be taped; firmly butt all joints to be left untreated.
3. Stagger all end joints and the joints between panels to achieve a maximum of bridging and a minimum of continued joints.

I. Taping and Finishing:
1. First Coat:
   a. Spread compound evenly over all joints, using suitable tools designed for the purpose.
   b. Fill all joint recesses and metal trim.
   c. Center the reinforcing tape on the joint and press into the fresh compound at all joints, wiping down with sufficient pressure to remove excess compound but leaving sufficient compound under the tape for proper bond.
   d. Feather all edges and leave the surface free from blisters and tape wrinkles.
   e. Apply compound to all fastener recesses, leaving flush with the adjacent surfaces.
   f. Fold reinforcing tape along its centerline and apply to all interior angles, following the same procedure as for joints.
   g. Surfaces shall be free of excess joint compound.
2. Second Coat:
   a. Lightly sand the dry compound with fine sandpaper to remove all irregularities.
   b. Apply a second coat of compound to all joints, feathering approximately three inches beyond edges of tape.
   c. Apply second coat to all fastener recesses.
   d. Surfaces shall be free of excess joint compound.
3. Third Coat:
   a. Lightly sand the dry compound with fine sandpaper to remove irregularities.
   b. Apply final skim coat, feathering out approximately two inches beyond second coat.
   c. Third coat all fastener recesses and metal trim, and all interior angles; allow to dry.
   d. Surfaces shall be free of excess joint compound.

J. Prep. Coat (Drywall Primer):
1. Apply Prep. Coat material at approximately 200 sq.ft. per gallon for all painted wall surfaces. Follow manufacturer's written recommendations for proper preparation of material, mixing and installation at recommended minimum coverage rates.
   a. For smooth walls with no texture, provide airless sprayer application in accordance with manufacturer's written recommendations.
      1) Fine finish: Sand wall surface with 220 grit mesh screen after application of Prep. Coat. **Do not oversand!**
   b. For textured walls: Provide roller application with a 3/8" to 1/2" nap roller before texture application is applied in accordance with manufacturer's written recommendations.

K. Primer - Surfacer:
1. Apply Primer - Surfacer material at manufacturer's written recommendations for proper preparation of material, mixing and installation, and at recommended minimum coverage rates.

a. For smooth walls with no texture, provide airless sprayer application in accordance with manufacturer's written recommendations.
   1) Fine finish: Sand wall surface with 220 grit mesh screen after application of Primer - Surfacer. **Do not oversand!**
b. For textured walls: Provide roller application with a 3/8" to 1/2" nap roller before texture application is applied in accordance with manufacturer's written recommendations.

L. Textured Finish Coats: After taping and finishing, apply Textured Finish Coats as indicated in the schedule at the end of this Specification Section.

3.4 FIELD QUALITY CONTROL

A. Site Tests:
1. Testing Agency: The Owner's Testing Laboratory Agency shall perform field tests and Inspections and prepare test reports.
   a. Testing and inspecting of completed installations of suspended gypsum board ceiling fasteners and anchors shall take place in successive stages, in areas of extent and using methods as follows. Do not proceed with installations of gypsum board ceiling hangers for the next area until test results for previously completed installations of acoustical panel ceiling hangers show compliance with requirements.
2. Extent of Each Test Area: When installation of ceiling suspension systems on each floor has reached 20 percent completion but no panels have been installed:
   a. Concrete Anchors:
      1) Must be capable of sustaining, without failure, a load equal to 200 lbs. tension for hanger wires and 440 lbs. tension for bracing wires by construction as determined by testing according to ASTM E 488 "Test Methods for Strength of Anchors in Concrete and Masonry Elements", by a qualified independent testing agency.
         a) Hanger Wire Anchors 1 in 10 must be field tested.
         b) Bracing Wire Anchors 1 in 2 must be field tested.
3. Remove and replace gypsum board ceiling hangers where test results indicate that they do not comply with specified requirements.
4. Additional testing and inspecting, at Contractor's expense, will be performed to determine compliance of replaced or additional work with specified requirements.
   a. When testing discovers fasteners and anchors that do not comply with requirements, testing agency will test those anchors ot previously tested until 20 pass consecutively and then will resume initial testing frequency.

B. Inspection:
1. As required by Regulatory Requirements.
2. Schedule inspections and notify the Architect, Project Inspector and any other regulatory agencies of the time at least 48 hours prior to the inspection.
3. No work shall be without the inspections required by Regulatory Requirements.

3.5 CLEANING

A. Clean in accordance with Specification Section - PROJECT CLOSEOUT.
1. Clean any soiled surfaces immediately.

2. Clean any soiled surfaces at the end of each day, minimum.
3. Finish shall be clean and ready for the application of any additional finishes.
4. In accordance with manufacturer's written instructions and recommendations.

3.6 PROTECTION

A. Protection from weather:
1. Protect newly installed work from moisture after installation.

B. Protection from traffic:
1. Provide final protection and maintain conditions, in a manner acceptable to manufacturer and installer, which ensures the work of this section being without damage or deterioration until the time of Substantial Completion.

3.7 SCHEDULES

A. The following textured finish coat finishes shall be applied to the board surfaces within the scope of this section prior to covering with other finish materials.
1. Refer to the Material and Finish Schedule for specific locations of each substrate finish.
2. Where no specific substrate finish is called for on the drawings, select the appropriate level of substrate finish from the descriptions below for the final finish material.
3. Where no determination can be made from the descriptions below, provide a minimum of GB-2 substrate finish.
4. Where sound, smoke control or fire-ratings are required, details of construction shall be in accordance with reports of tested assemblies meeting the requirements.

B. GB-1 - Architect's Finish Designation:
1. Level 5 - GYPSUM ASSOCIATION'S LEVEL OF GYSPSUM BOARD FINISH:
a. All joints and interior angles shall have tape embedded in joint compound and two separate coats of joint compound applied over all flat joints and one separate coat of joint compound applied over interior angles. Fastener heads and accessories shall be covered with three separate coats of joint compound. A thin skim coat of joint compound or a material manufactured especially for this purpose, shall be applied to the entire surface. The surface shall be smooth and free of tool marks and ridges.
b. Architect’s Finish:
1) Uniformly smooth and ready to receive light grade wallcoverings, or fine textured finishes, or flat, semi-gloss, or gloss paints over flat surfaces.
2) Use “Fog and Splatter” fine textured finish where walls and ceilings are scheduled to be painted, unless otherwise noted.

C. GB-2 - Architect's Finish Designation:
1. Level 4 - GYPSUM ASSOCIATION'S LEVEL OF GYSPSUM BOARD FINISH:
a. All joints and interior angles shall have tape embedded in joint compound and two separate coats of joint compound applied over all flat joints and one separate coat of joint compound applied over interior angles. Fastener heads and accessories shall be covered with three separate coats of joint compound. All joint compound surfaces shall be smooth and free of tool marks and ridges.
b. Architect’s Finish:

1) Uniformly smooth and ready to receive light textures (“Spray-Splatter”, “Orange Peel” (light or heavy) ‘Stipple” or “Skip Trowel” finishes), or medium grade wall-coverings.
2) Use “Orange Peel” light texture finish when walls and ceilings are scheduled to be painted, unless otherwise noted.

D. GB-3 - Architect's Finish Designation:
1. Level 2 - GYPSUM ASSOCIATION'S LEVEL OF GYSPSUM BOARD FINISH:
a. All joints and interior angles shall have tape embedded in joint compound and wiped with a joint knife leaving a thin coating of joint compound over all joints and interior angles. Fastener heads and accessories shall be covered with a coat of joint compound. Surface shall be free of excess joint compound. Tool marks and ridges are acceptable. Joint compound applied over the body of the tape at the time of tape embedment shall be considered a separate coat of joint compound and shall satisfy the conditions of this level.
b. Architect’s Finish:
1) Total surface must be sufficiently smooth to create a good bonding plane acceptable for installation of scheduled materials (ceramic tile, plywood, acoustical tile or similar materials).

E. GB-4 - Architect's Finish Designation:
1. Level 3 - GYPSUM ASSOCIATION'S LEVEL OF GYSPSUM BOARD FINISH:
a. All joints and interior angles shall have tape embedded in joint compound and one additional coat of joint compound applied over all joints and interior angles. Fastener heads and accessories shall be covered with two separate coats of joint compound. All joint compound shall be smooth and free of tool marks and ridges.
b. Architect’s Finish:
1) Uniformly smooth and ready to receive heavy grade wallcoverings or medium heavy texture finishes (spray or hand applied).
2) Use medium textured finishes where walls and ceilings are scheduled to be painted, unless otherwise noted.

F. GB-5 - Architect's Finish Designation:
1. Level 1 - GYPSUM ASSOCIATION'S LEVEL OF GYSPSUM BOARD FINISH:
a. All joints and interior angles shall have tape set in joint compound. Surface shall be free of excess joint compound. Tool marks and ridges are acceptable.
b. Architect’s Finish:
1) No applied texture. Use at areas that are above finished ceilings, in attics, in areas where the assembly would generally be concealed.

G. GB-6 - Architect's Finish Designation:
1. Level 0 - GYPSUM ASSOCIATION'S LEVEL OF GYSPSUM BOARD FINISH:
a. No taping, finishing, or accessories required.
b. Architect’s Finish:
2. Intended for “Temporary Partitions” and not for permanent construction. Not suitable for Fire-resistive construction.

H. Non-rated and fire-rated wall signage:

1. Provide identification on both sides of all non-rated, fire-rated, and area separation walls with 3" high stenciled letters above ceiling line and no further than 30' from the adjacent identification symbol. Intersecting walls with different ratings shall be identified 5' from such intersection. All identification symbols shall be visible without the aid of a ladder or other similar devices. Colors listed below are from PPG/ICI's "DEV-GUARD" 4208 Series Industrial Interior Enamel line.

	IDENTIFICATION	**COLOR OF IDENTIFICATION**
a.	Non-Rated Wall	Semi-Gloss Black
b.	1-HR Fire Wall	Fire Red
c.	1-HR Occupancy Separation Wall	International Orange
d.	2-HR Fire Wall	Safety Blue
e.	2-HR Occupancy Separation Wall	Cobalt Blue
f.	2-HR Shaft Wall	Safety Green
g.	3-HR Fire Wall	Prairie Beige
h.	4-HR Fire Wall	Safety Yellow

END OF SECTION

INTENTIONALLY LEFT BLANK

SECTION 093000 - TILE

PART 1 - GENERAL

1.1 SUMMARY

A. This Section includes the following:
   1. Provide all material, labor, equipment and services necessary to completely install all tile materials, accessories and other related items necessary to complete the Project as indicated by the Contract Documents.

B. Related Sections: The following Project Manual Sections contain requirements that relate to this section:
   1. ALL DIVISION 00 SPECIFICATION SECTIONS.
   2. ALL DIVISION 01 SPECIFICATION SECTIONS.
   3. 03 30 00 CAST-IN-PLACE CONCRETE
   4. 04 22 00 CONCRETE MASONRY UNITS
   5. 06 10 00 ROUGH CARPENTRY
   6. 07 18 50 VAPOR-ALKALINITY CONTROL
   7. 07 92 00 SEALANTS
   8. 08 31 13 ACCESS DOORS AND FRAMES
   9. 09 24 00 CEMENT PLASTER
   10. 09 29 00 GYPSUM BOARD
   11. 09 68 40 CARPET
   12. 10 21 13 TOILET PARTITIONS
   13. 10 28 13 TOILET ACCESSORIES
   14. ALL SPECIFICATION SECTIONS IN THE FACILITY SERVICES SUBGROUP.

1.2 REFERENCES

A. Standards:
   1. In accordance with the following standards:
      a. ADAAG Americans with Disabilities Act Accessibilities Guidelines
      b. ANSI American National Standards Institute, Specifications for the Installation of Ceramic Tile, latest edition, unless otherwise indicated.
      c. FDA Food and Drug Administration
      d. TCNA Tile Council of North America, "Handbook for Ceramic Tile Installation".

1.3 DEFINITIONS

A. Definitions shall comply with the latest edition of the TCNA "Handbook for Ceramic Tile Installation".
   1. MOH's: Relative Measure of Hardness by scratching the surface of the tile with different minerals and subjectively assigning a "MOH's Scale Hardness" number to the glaze.

1.4 SUBMITTALS

A. Submit in accordance with Specification Section - SUBMITTAL PROCEDURES:
   1. Product Data:
      a. For each type of Tile indicated.
      b. Manufacturer's full color range (including any standard and premium colors).
      c. Design Data for components, fillers, adhesives, etc.
   2. Shop Drawings:
      a. Location of all movement/expansion joints.
   3. Samples:
      a. 12 inch square sample of each color and pattern selected.
      b. 6 inch lineal samples of each piece of trim material specified.
   4. Quality Assurance/Control Submittals:
      a. Test Reports:
         1) From Manufacturer that all floor tile complies with the slip resistance standards recommended by the ADAAG.
      b. Certificates:
         1) Provide TCNA Master Grade Certificate.
      c. Manufacturer's Written Installation Instructions.
      d. Statement of Installer's Qualifications.
   5. Closeout Submittals in accordance with the following:
      a. Maintenance Data in accordance with Specification Section - PROJECT CLOSEOUT.
      b. Warranty in accordance with this specification, and with Specification Section - WARRANTIES.

1.5 QUALITY ASSURANCE

A. Qualifications:
   1. Material Qualifications:
      a. Tile Grade: Standard Grade in accordance with ANSI A 137.1x.
      b. Tile shall meet the Breaking Strength limits listed in accordance with ASTM C 648 “Test Method for Breaking Strength of Ceramic Tile”.
      c. Tile shall meet the Scratch Hardness limits in accordance with MOH's
      d. TCNA Master Grade Certificate signed by tile manufacturer and tile installer.
   2. Installer Qualifications:
      a. Engage an experienced Installer who has successfully completed three (3) projects of similar scope and size to that indicated for this Project.

B. Regulatory Requirements:
   1. In accordance with Specification Section - REGULATORY REQUIREMENTS, and the following:
      a. CARB Materials and equipment used for this Project shall comply with the current applicable regulations of the California Air Resources Board (CARB) and the Environmental Protection Agency (EPA), in the area where the project is located.
      b. CBC California Building Code (CBC 804.1)

C. Meetings:
1. Pre-Installation: Scheduled by the Contractor prior to the start of work.
   a. Coordinate the work with other work being performed.
   b. Identify any potential problems that may impede planned progress and proper installation of work regarding quality of installation and warranty requirements.
   c. Review delivery, storage, and handling procedures.
   d. Review Project Conditions.
   e. Review subfloor preparation procedures.
2. Progress: Scheduled by the Contractor during the performance of the work.
   a. Review for proper installation of work progress.
   b. Identify any installation problems and acceptable corrective measures.
   c. Identify any measures to maintain or regain project schedule if necessary.
3. Completion: Scheduled by the Contractor upon proper completion of the work.
   a. Inspect and identify any problems that may impede issuance of warranties or guaranties.
   b. Maintain installed work until the Notice of Substantial Completion has been executed.

1.6 DELIVERY, STORAGE, AND HANDLING

A. Packing, shipping, handling, and unloading:
1. Products shall be handled in such a manner as to assure that they are free from dents, chips, scratches and other damage.

B. Acceptance at Site:
1. Products must be in manufacturer's original unopened containers with labels indicating brand name, model, and grade.
2. Damaged products will not be accepted.

C. Storage and protection:
1. Products shall be stored above ground on level platforms, six (6) inches above ground, allowing air circulation under stacked units.
   a. Cover materials with protective waterproof covering providing for adequate air circulation and ventilation.

1.7 PROJECT CONDITIONS

A. Environmental requirements:
1. Temperature:
   a. Maintain temperature in space to receive ceramic tile above 50 degrees F for 3 days prior, during, and 7 days following installation.

B. Existing Conditions:
1. Examine site and compare it with the drawings and specifications. Thoroughly investigate and verify conditions under which the work is to be performed. No allowance will be made for extra work resulting from negligence or failure to be acquainted with all available information concerning conditions necessary to estimate the difficulty or cost of the work.
2. Field Measurements:

a. Take and be responsible for field measurements as required.
b. Report any significant differences between field dimensions and drawings to the Architect.

1.8 WARRANTY

A. Contractor's General Warranty:
1. In accordance with Specification Section - WARRANTIES.

B. Manufacturer's Warranty:
1. In accordance with manufacturer's written standard warranty,
2. Warranty Period shall be for the following:
a. Interior Ceramic Tile One (1) Year.
b. Exterior Ceramic Tile One (1) Year.
c. Quarry Tile One (1) Year.
d. Stone Tile One (1) Year.
e. Glass TileOne (1) Year.

C. Installer's Warranty:
1. In accordance with the terms of the Specification Section - WARRANTIES:
a. Warranty period: One (1) Year.

1.9 MAINTENANCE

A. Extra Materials:
1. Maintenance Material:
a. In accordance with Specification Section - PROJECT CLOSEOUT.
b. Supply 2 square feet of tile and 3 lineal feet of trim for each color and pattern of tile

PART 2 - PRODUCTS

2.1 MANUFACTURERS

A. These products listed herein establish the size, pattern, color range and function selected by the Architect for this Project. Manufacturers that are listed as acceptable alternative manufacturers and substitutions must still comply with the requirements of this project and the products listed in order to be approved as an equivalent during the Submittal Process. If the acceptable alternative manufacturers listed or substitutions are not approved during the Submittal Process due to non-compliance with the contract documents, then the Contractor shall submit product specified.
1. Interior Ceramic Tile manufacturer:
a. DALTILE.
b. Acceptable alternative manufacturers:
1) CROSSVILLE CERAMICS.
2) INTERCERAMIC.
2. Exterior Accent Ceramic Tile manufacturer:
a. BUCHTAL.

b. Acceptable alternative manufacturers:
1) DALTILE.

3. Quarry Tile manufacturer:
a. DALTILE.
b. Acceptable alternative manufacturers:
1) CROSSVILLE CERAMICS.
2) INTERCERAMIC.

4. Stone Tile manufacturer:
a. DALTILE.
b. Acceptable alternative manufacturers:
1) CROSSVILLE CERAMICS.
2) INTERCERAMIC

5. Glass Tile manufacturer:
a. DALTILE.
b. Acceptable alternative manufacturers:
1) CROSSVILLE INC.

6. Grout Materials manufacturer:
a. MAPEI.
b. Acceptable alternative manufacturers:
1) CUSTOM BUILDING PRODUCTS, INC.
2) LATICRETE.

7. Mortar Materials manufacturer:
a. MAPEI.
b. Acceptable alternative manufacturers:
1) CUSTOM BUILDING PRODUCTS, INC.
2) LATICRETE.

8. Admixture manufacturer:
a. MAPEI "Plancrete AC".

9. Membranes manufacturer:
a. THE NOBLE COMPANY.
b. Acceptable alternative manufacturers:
1) DALTILE.
2) INTERCERAMIC

10. Cementitious Backer Units manufacturer:
a. USG CORPORATION "DUROCK Cement Board".
b. Acceptable alternative manufacturers:
1) C-CURE "C-Cure Board 990".
2) CUSTOM BUILDING PRODUCTS "Wonderboard".
3) FINPAN, INC. "Util-A-Crete Concrete Backer Board".

11. Sealer manufacturer:
a. CUSTOM BUILDING PRODUCTS Tile Lab "Surface Gard Penetrating Sealer".
1) Acceptable alternative manufacturers:
a) C-CURE "Penetrating Sealer #978".

B. Products from other manufacturers not listed must submit in accordance with Specification Section - SUBSTITUTION PROCEDURES.

2.2 MATERIALS

A. General:
1. Tile installed on level walkway surfaces shall be slip resistant by achieving a minimum 0.6 or greater static coefficient of friction as recommended in Appendix A4.5 of the ADAAG by testing per ASTM C 1028 "Test method for Static Coefficient of Friction of Ceramic Tile and Like Surfaces by the Horizontal Dynometer Pull Meter Method".
   a. Tile installed on ramps shall achieve a minimum 0.8 or greater static coefficient of friction as recommended in Appendix A4.5 of the ADAAG by testing per ASTM C 1028 "Test method for Static Coefficient of Friction of Ceramic Tile and Like Surfaces by the Horizontal Dynometer Pull Meter Method".
2. Colors and patterns shall be selected from manufacturer's standard line (including premium), except as noted otherwise.

B. Ceramic:
1. Interior Floor Tile **CT-1.**
   a. Manufacturer: DALTILE.
      1) "Keystones" unglazed mosaics, Groups 1,2,3,4 and S.
      2) Trim to match.
         a) Tile Trim Units: Provide tile trim units (i.e. "bullnoses", "thin-set bullnoses", "coves", "thin-lip bases", "round top bases", "beads", and "countertop edge trims" as is appropriate to tile types) to match characteristics of adjoining flat tile.
   b. Design: 2" x 2" x 1/4" thick.
   c. Pattern: Any combination thereof of the sizes listed above, to be back/edge mounted on manufacturers strong, flexible 2' x 1' sheets.
   d. Grout joint width: 1/16".
   e. Color: Shall be selected in any combination thereof from manufacturer's full range of color.
   f. Material: Unglazed Porcelain Ceramic Mosaics.
      1) Water Absorption: less than 0.5 percent.
      2) Breaking Strength: greater than 364 lbs.
      3) Chemical Resistance: Resistant.
      4) Bond Strength: greater than 65 psi.
      5) Coefficient of Friction: greater than or equal to 0.60.
   g. Base:
      1) 6" high x 12" long x 2" x 2" back/edge mounted built-up coved base, including inside and outside corner trims.
      2) Pattern to match floor tile.
2. Interior Wall Tile: **CT-2.**
   a. Manufacturer: DALTILE.
      1) Semi-Gloss, Matte or Crystaltex, Groups 1 and 2.
      2) Trim to match.
         a) Tile Trim Units: Provide tile trim units (i.e. "bullnoses", "thin-set bullnoses", "coves", "thin-lip bases", "round top bases", "beads", and "countertop edge trims" as is appropriate to tile types) to match characteristics of adjoining flat tile.
   b. Design: 4-1/4" x 4-1/4" x 5/16" thick.
   c. Pattern: Single size tile pattern.

d. Grout joint width: 1/16".
e. Color: Shall be selected in any combination thereof from manufacturer's full range of colors.
f. Material: Interior Glazed Ceramic.
1) Water Absorption: less than 16.0 percent.
2) Scratch Hardness: 4.
3) Chemical Resistance: Resistant.
g. Base:
1) 4-1/4" x 4-1/4" coved based including inside and outside corner trims.
2) Pattern to match wall tile.

3. Interior "Accent" Wall Tile: **CT-3.**
a. Manufacturer: DALTILE.
1) Semi-Gloss, Group 3 and 4.
2) Trim to match.
a) Tile Trim Units: Provide tile trim units (i.e. "bullnoses", "thin-set bullnoses", "coves", "thin-lip bases", "round top bases", "beads", and "countertop edge trims" as is appropriate to tile types) to match characteristics of adjoining flat tile.
b. Design: 4-1/4" x 4-1/4" x 5/16" thick.
c. Pattern: Single size tile pattern.
1) Grout joint width: 1/16".
d. Color: Shall be selected in any combination thereof from manufacturer's full range of colors.
e. Material: Interior Glazed Ceramic.
1) Water Absorption: less than 16.0 percent.
2) Scratch Hardness: 4.
3) Chemical Resistance: Resistant.

4. Exterior "Accent" Wall Tile: **CT-4.**
a. Manufacturer: BUCHTAL.
1) Chroma Series, including "Intensive" colors.
2) Trim to match.
a) Tile Trim Units: Provide tile trim units (i.e. "bullnoses", "thin-set bullnoses", "coves", "thin-lip bases", "round top bases", "beads", and "countertop edge trims" as is appropriate to tile types) to match characteristics of adjoining flat tile.
b. Design: 4" x 4" x 5/16".
c. Pattern: Single size tile pattern.
1) Grout joint width: 1/4".
d. Color: Shall be selected from the manufacturer's full range of glaze colors.
e. Material: Exterior Glazed Ceramic.
1) Moisture Absorption Rate: 1.6 percent.
2) All colors: 0.5 - 3.0 percent.
3) Breaking Strength: Exceeds ANSI A 137.1, Sec. 6.3.
4) Bond Strength: 507 PSI.

5. Exterior "Accent" Wall Tile: **CT-5.**
a. Manufacturer: BUCHTAL.
1) Chroma Series, including "Intensive" colors.
2) Trim to match.

a) Tile Trim Units: Provide tile trim units (i.e. "bullnoses", "thin-set bullnoses", "coves", "thin-lip bases", "round top bases", "beads", and "countertop edge trims" as is appropriate to tile types) to match characteristics of adjoining flat tile.

b. Design: 8" x 8" x 5/16".

c. Pattern: Single size tile pattern.

1) Grout joint width: 1/4".

d. Color: Shall be selected from the manufacturer's full range of glaze colors.

e. Material: Exterior glazed ceramic.

1) Moisture Absorption Rate: 1.6 percent.

2) All colors: 0.5 - 3.0 percent.

3) Breaking Strength: Exceeds ANSI A 137.1, Sec. 6.3.

4) Bond Strength: 507 PSI.

6. Exterior "Accent" Wall Tile: **CT-6.**

a. Manufacturer: BUCHTAL.

1) Chroma Series, including "Intensive" colors. Trim to match.

2) Trim to match.

a) Tile Trim Units: Provide tile trim units (i.e. "bullnoses", "thin-set bullnoses", "coves", "thin-lip bases", "round top bases", "beads", and "countertop edge trims" as is appropriate to tile types) to match characteristics of adjoining flat tile.

b. Design: 12" x 12" x 5/16".

c. Pattern: Single size tile pattern.

1) Grout joint width: 1/4".

d. Color: Shall be selected from the manufacturer's full range of glaze colors.

e. Material: Exterior glazed ceramic.

1) Moisture Absorption Rate: 1.6 percent.

2) Breaking Strength: Exceeds ANSI A 137.1, Sec. 6.3.

3) Bond Strength: 507 PSI.

C. Quarry:

1. Interior Floor Tile **QT-1.**

a. Manufacturer: DALTILE.

1) "Quarry Textures".

2) Trim to match.

a) Tile Trim Units: Provide tile trim units (i.e. "bullnoses", "thin-set bullnoses", "coves", "thin-lip bases", "round top bases", "beads", and "countertop edge trims" as is appropriate to tile types) to match characteristics of adjoining flat tile.

b. Design: 6" x 6" x 1/2".

c. Pattern: Single size tile pattern.

1) Grout joint width: 3/8".

d. Color: Shall be selected from manufacturer's full unglazed quarry tile "Textures" range, or approved equivalent.

e. Material: Unglazed Textured Quarry.

1) Moisture Absorption Rate: less than or equal to 3.0 percent.

2) Breaking Strength: greater than 350 lbs.

3) Coefficient of Friction Rate: greater than or equal to 0.70.

4) Scratch Hardness: 7.

5) Chemical Resistance: Resistant.

f. Base:

1) 5" x 6" x 1/2" coved base with round top, including inside and outside corner trim. 3/8" radius minimum cove.

D. Stone:
1. Exterior and Interior Floor Tile: **ST-1**
a. Manufacturer: DALTILE.
1) "Indian Multicolor".
2) Trim to match.
a) Tile Trim Units: Provide tile trim units (i.e. "bullnoses", "thin-set bullnoses", "coves", "thin-lip bases", "round top bases", "beads", and "countertop edge trims" as is appropriate to tile types) to match characteristics of adjoining flat tile.
b. Design: 12" x 12" x 3/8".
c. Shade Variation: Random.
1) Grout joint width: 3/8".
d. Color: "S771 - Multicolor".
e. Material: Slate.
1) Coefficient of Friction Rate: greater than 0.70.

E. Glass Tile: **GT-1.**
1. Manufacturer: DALTILE.
a. "City Lights" Glass mosaics, Group 1.
b. Design: 1/2" x 1/2" x 1/8" thick (11-1/2" x 11-1/2" sheets).
c. Pattern: Any combination thereof of the sizes listed above.
d. Grout joint width: 1/16".
e. Color: Shall be selected in any combination thereof from manufacturer's full range of color.
f. Material: Glass Mosaics.
1) Water Absorption: less than 0.1 percent.
2) Breaking Strength: greater than 250 lbs.
3) Chemical Resistance: Resistant.
4) Bond Strength: greater than 65 psi.
5) Coefficient of Friction: less than or equal to 0.42.
g. Mosaic Mounting Method: Paper mounting on face of tile (no mesh backing).
h. Setting Material Color: White.

F. Setting Bed:
1. Thick-Set:
a. Portland Cement: In accordance with ASTM C 150 “Specification for Portland Cement”, Type 1.
b. Sand (Aggregate): In accordance with ASTM C 144 “Standard Specification for Aggregate for Masonry Mortar”.
c. Hydrated Lime: In accordance with ASTM C 207 “Specification for Hydrated Lime for Masonry Purposes”, Type S.
d. Admixture: Shall be Mortar Latex Admix "Planicrete AC" as manufactured by MAPEI, or approved equivalent.
1) This Admixture serves as a replacement for part or all of gaging water, of type specifically recommended by latex-additive manufacturer for use with field-mixed portland cement and aggregate mortar bed.
2. Thin-Set:

a. Dry-Set Portland Cement Mortar: In accordance with ANSI A 118.1-1999.
   1) Shall be "Kerabond" by MAPEI, or approved equivalent for floor and wall surfaces.
      a) For wall applications, provide non-sagging mortar that complies with Paragraph F-4.6.1 in addition to the other requirements in ANSI A118.4.
b. Latex-Portland Cement Mortar: In accordance with ANSI A 118.4-1999.
   1) Shall be "Keralastic" + "Kerabond" by MAPEI, or approved equivalent for floor and wall masonry or floor and wall concrete surfaces.
      a) For wall applications, provide non-sagging mortar that complies with Paragraph F-4.6.1 in addition to the other requirements in ANSI A118.4.

G. Grout:
1. Cement:
   a. ANSI A108.10, composed of white or gray cement and white or colored aggregate as required to produce color indicated.
2. Commercial Cement:
   a. ANSI A118.6, composed of Standard Sanded Cement Grout, color as indicated.
3. Silicone-Rubber:
   a. One-part, chemically curing, silicone-rubber-based elastomeric sealants used for factory-grouted joints within pre-grouted sheets of glazed wall tile and for field-grouted joints between the same pre-grouted sheet
      1) Silicone-Rubber grout shall not be used on kitchen countertops or other food preparation surfaces unless it meets the requirements of FDA Regulation No. 21, CFE 177.2600.
4. Dry-Set:
   a. ANSI A 108.5-1999 and ANSI A 118.1-1999, a mixture of Portland Cement with sand and additives, color as indicated.
5. Epoxy:
   a. ANSI A118.3-1999, Chemical-Resistant, Water-Cleanable, Ceramic Tile-Setting and Grouting Epoxy, color as indicated.

2.3 ACCESSORIES

A. Membranes:
1. Wall:
   a. Polyethylene, 4 mil sheet with 6 inch laps at wet areas.
   b. Polyethylene, 6 mil sheet with 6 inch laps at shower areas adjacent to concrete or masonry wall areas.
2. Floor:
   a. Mortar bed: Nonplasticized, chlorinated polyethylene sheet faced on both sides with nonwoven polyester fabric; 0.040 inch nominal thickness, water vapor transmission rate 0.040 perms per ASTM E 96 “Test Methods for Water Transmission of Materials”, Procedure E.
      1) "Chloraloy" by THE NOBLE COMPANY.
   b. Thin-Set: Nonplasticized, chlorinated polyethylene sheet faced on both sides with nonwoven polyester fabric; 0.030 inch nominal thickness, water vapor transmission rate 0.15 perms per ASTM E 96 “Test Methods for Water Transmission of Materials”, Procedure E.

1) "Nobleseal TS" by THE NOBLE COMPANY.
2) Approved equivalent: "Dal-Seal CIS" by DALTILE over a skim coat of "Keralastic" + "Kerabond" by MAPEI.

B. Cementitious Backer Units:
1. Provide cementitious backer units complying with ANSI A118.9-1999, in maximum lengths available to minimize end-to-end butt joints.
a. Thickness: Manufacturer's standard thickness, but not less than 1/2 inch unless otherwise noted.
b. Width: Manufacturer's standard width, but not less than 32 inches, unless otherwise noted.

C. Miscellaneous Materials:
1. Provide miscellaneous guides, shims, spacers, rust resistant fasteners, etc., applicable to substrates and finish materials necessary for flat and true surfaces that minimize cracks, bulges and uneven surfaces.

D. Cleaners:
1. Tile Cleaner: A neutral cleaner capable of removing soil and residue without harming tile and grout surfaces, specifically approved for materials and installations indicated by tile and grout manufacturers.

E. Sealers:
1. Grout and Tile Sealer: Manufacturer's standard product for sealing grout joints and tile surfaces that does not change color or appearance of grout or tile.

PART 3 - EXECUTION

3.1 EXAMINATION

A. Site verification of conditions:
1. Prior to the execution of the work under this specification section, inspect the installed work executed under other sections of this Project Manual, which affect the execution of work under this specification section.
2. Report unacceptable conditions to the Architect. Do not begin work until unacceptable conditions have been corrected.
3. Execution of work under this specification section shall constitute acceptance of existing conditions.

3.2 PREPARATION

A. Coordination:
1. Coordinate work under this specification section with work specified under other sections to ensure proper and adequate interface of work.
2. Prior to installation of Tile, inspect the installed work executed under other Sections which affect the installation of Tile.
a. Prepare masonry surfaces with a parge coat and cure so that all surfaces are flat prior to the installation of tile.

B. Protection:
1. Protect all adjacent surfaces from drips, spray, air pollution of surrounding environment, and other damage from work under this specification section.

C. Surface preparation:
1. Prepare surface in accordance with manufacturer's written instructions and recommendations.
2. Clean substrates of substances (oil, grease, rolling compounds, incompatible primers, loose mill scale, etc.) which could impair bond of materials specified within this section.
3. Maximum backing surface variations shall be as follows:
   a. Mortar Bed at Floors: 1/4 inch in 10 feet from required plane.

3.3 INSTALLATION

A. General:
1. In accordance with manufacturer's written instructions and recommendations unless specifically noted otherwise.
2. In accordance with approved submittals.
3. In accordance with Regulatory Requirements.
4. Set plumb, level, and square.
5. Determine location of all movement/expansion joints before starting tile work.
6. Install Cementitious Backer Units in accordance with Cementitious Backer Unit Board Manufacturer's recommendations.
   a. Shim Cementitious Backer Unit Boards as required for a flat and true surface plane with no bulges or uneven or flared surfaces.
   b. Set shims at fasteners.
   c. Fasten with corrosion resistant, waferhead, self-drilling screws with countersinking ribs, min. 8 gauge. Set flush with Board's surface. Fasten thru shims.
7. Determine location of all toilet accessories before starting tile work.
8. Isolate tile installations from concrete slabs at shower floor areas to minimize cracking of the tile installation systems. Install in accordance with the TCNA recommendations using cleavage membranes.
   a. Provide crack isolation membranes as required in accordance with TCNA installation requirements.
9. Provide wall membranes as required by TCNA installation requirements.

B. Layout:
1. Lines shall be straight and true.
2. Refer to Wall and Floor Pattern Drawing(s) in the Interior and Exterior Color Schedules for layout of patterns.
3. Lay out all tile work to minimize cuts less than one-half in size.
4. Lay out tile wainscots to next full tile beyond dimension shown.

C. Joints
1. General: Movement/Expansion Joints shall be placed in accordance with the TCNA recommendations for placement.
2. Align all wall joints to give straight uniform grout lines, plumb and level.
3. Align all floor joints to give straight uniform grout lines, parallel with walls.
4. All joints shall be uniform in width.
5. Locate expansion joints in the tilework:

a. Over construction or expansion joints in the backing.
b. Where backing materials change or change directions.
c. At wall/floor intersections.
d. Exterior work:
1) Not more than 8 - 12 feet in each direction.
e. Interior work:
1) Not more than 20 - 25 feet in each direction.
a) Interior tilework exposed to direct sunlight or moisture: 8 to 12 feet in each direction.
b) Above ground concrete slab substrate: 8 to 12 feet in each direction.

6. Movement/expansion joint width sizes:
a. Working Butt Joints 1/4 inch minimum.
b. Working Lap Joints 1/8 inch minimum.

D. Tile System Installations:
1. Interior Floor:
a. System IFA: Concrete Sub-Floor, thin-set installation: **SYS-IFA.**
1) Use: Dry or Limited water exposure.
2) Method: Dry-set Mortar or Latex-Portland Cement Mortar.
3) Detail Standard: TCNA F113-, 3/32" thin-set Dry-set or Latex-Portland Cement Mortar, Bond Coat, Tile, Grout.
4) Installation Standard:
a) Tile: ANSI A 108.5.
b) Grout: ANSI A 108.10.
b. System IFB: Concrete Sub-Floor, mortar bed installation. **SYS-IFB.**
1) Use: Dry or Wet (Kitchens and Toilets).
2) Method: Cement Mortar.
3) Detail Standard: TCNA F114 - Cleavage Membrane, Reinforcing, 1-1/4" to 2"- Mortar Bed, Bond Coat, Tile, Epoxy Grout.
4) Flush Grout with tile surface at kitchen floors only.
5) Installation Standard:
a) Tile: ANSI A 108.1B.
b) Epoxy Grout: ANSI A 108.6.
c. System IFC: Concrete Sub-Floor, shower receptor mortar bed installation: **SYS-IFC.**
1) Use: Wet Exposure (Showers).
2) Method: Cement Mortar.
3) Detail Standard: TCNA B414 - Tile or Stone, Shower Membrane, 1" to 1-3/4" Reinforced Mortar Bed, Bond Coat Tile, Grout.
4) Installation Standard:
a) Tile: ANSI A 108.1B.
b) Grout: ANSI A 108.10.
c) Shower Pan Membrane ANSI A108.01-3.6
d. System IFD: Concrete Sub-Floor, Cementitious Backer Installation **SYS-IFD**.
1) Use: Wet Exposure (Showers).
2) Method: Latex Portland Cement Mortar.
3) Detail Standard: TCNA B 415 – shower floor membrane, cementitous backer unit over Wood or Metal studs or fiber cement underlayment, reinforced mortar bed, tile.
4) Installation Standard:
a) Tile: ANSI A 108.5.

b) Grout: ANSI A 108.10.
c) Shower Pan Membrane ANSI A108.01-3.6.

2. Interior Wall:
   a. System IWA: Masonry or Concrete Walls, thin-set installation **SYS-IWA**.
      1) Use: Dry or Limited Water Exposure (Toilets).
      2) Method: Cement Mortar.
      3) Detail Standard: TCNA W202I - 3/32" Thin-Set Mortar Bed Bond Coat, Tile, Epoxy Grout.
      4) Installation Standard:
         a) Tile ANSI A 108.5.
         b) Epoxy Grout ANSI A 108.6.
   b. System IWB: Masonry or Concrete Walls, mortar bed installation **SYS-IWB.**
      1) Use: Dry or Limited Water Exposure (Toilets).
      2) Method: Cement Mortar, Bonded.
      3) Detail Standard: TCNA W211 - 3/8" to 3/4" Mortar Bed, Bond Coat, Tile, Grout.
      4) Installation Standard:
         a) Tile ANSI A 108.1A, 1B, or 1C.
         b) Grout ANSI A 108.10.
   c. System IWC: Masonry or Concrete Walls, Mortar bed installation **SYS-IWC.**
      1) Use: Wet Exposure (Showers)
      2) Method: Cement Mortar.
      3) Detail Standard: TCA 221 - Membrane, Metal Lath, 3/4" to 1 1/2" Scratch Coat and Epoxy Mortar Bed, Bond Coat, Tile, Epoxy Grout.
      4) Installation Standard:
         a) Tile ANSI A 108.1B.
         b) Epoxy Grout ANSI A 108.6.
         c) Waterproof membrane ANSI A108.13.
   d. System IWD: Gypsum Board Wall, thin-set installation **SYS-IWD**.
      1) Use: Dry Exposure.
      2) Method: Dry-Set or Latex-Portland Cement Mortar.
      3) Detail Standard: TCNA W243 - Water Resistant Gypsum Board, 3/32" Thin-Set Dry-Set or Latex-Portland Cement Mortar, Bond Coat, Tile, Grout.
      4) Installation Standard:
         a) Tile ANSI A 108.5.
         b) Grout ANSI A 108.10.
   e. System IWE: Wood Stud Walls, mortar bed installation **SYS-IWE.**
      1) Use: Dry or Wet Exposures (Kitchen, Toilets and Showers).
      2) Method: Cement Mortar.
      3) Detail Standard: TCNA W231 - Cleavage Membrane, Metal Lath, 3/4" to 1-1/2" Scratch Coat and Mortar Bed, Bond Coat, Tile, Grout.
      4) Installation Standard:
         a) Tile ANSI A 108.1B.
         b) Grout ANSI A 108.10.
         c) Waterproof membrane ANSI A108.13.
   f. System IWF: Metal Stud Walls, mortar bed installation **SYS-IWF**.
      1) Use: Dry or Wet Exposure (Kitchen, Toilets and Showers).
      2) Method: Cement Mortar.
      3) Detail Standard: TCNA W241 - Cleavage Membrane, Metal Lath, 3/4" to 1" Scratch Coat and Mortar Bed, Bond Coat, Tile, Grout.
      4) Installation Standard:

a) Waterproof membrane ANSI A108.13.
b) Cured Mortar Bed.
c) Tile ANSI A 108.1B.
d) Grout ANSI A 108.10.

3. Exterior Wall:
   a. System EWA: Masonry or Concrete Walls, 3/4" to 1" mortar bed installation **SYS-EWA.**
      1) Use: Dry or Wet Exposure.
      2) Method: Cement Mortar.
      3) Detail Standard: TCNA W201 - Wall Membrane, Metal Lath, 3/4" To 1" Scratch Coat/Mortar Bed, Bond Coat, Tile, Grout.
      4) Installation Standard:
         a) Waterproof Membrane ANSI A108.13.
         b) Tile ANSI A 108.1B.
         c) Grout ANSI A 108.10.
   b. System EWB: Solid Backing Walls, 3/8" to 3/4" reinforced mortar bed **SYS-EWB**.
      1) Use: Dry or Wet Exposure.
      2) Method: Cement Mortar.
      3) Detail Standard: TCNA W221 - Wall Membrane, Metal Lath, 3/8" To 3/4" Scratch Coat/Mortar Bed, Bond Coat, Tile, Grout.
      4) Installation Standard:
         a) Waterproof Membrane ANSI A108.13.
         b) Tile ANSI A 108.1A, 1B, or 1C A108.1B is required if waterproof membrane or epoxy bond coat is to be used.
         c) Grout ANSI A 108.10.
   c. System EWC: Metal Stud Walls, 3/4" to 1" mortar bed, exterior walls **SYS-EWC**.
      1) Use: Dry or Wet Exposure.
      2) Method: Cement Mortar.
      3) Detail Standard: TCNA W241 - Wall Membrane, Metal Lath, 3/4" To 1" Scratch Coat/Mortar Bed, Bond Coat, Tile, Grout.
      4) Installation Standard:
         a) Waterproof Membrane ANSI A108.13.
         b) Tile ANSI A 108.1A, 1B, or 1C A108.1B is required if waterproof membrane or epoxy bond coat is to be used.
         c) Grout ANSI A 108.10.
4. Sealer Application:
   a. For tile and grout sealers, follow manufacturer's written recommendations and procedures, at application rates recommended by the label on the material container.
   b. Apply penetrating grout sealer and cure in accordance with tile manufacturer's written recommendations for the resistance of moisture penetration into the grout surface.
   c. For Stone Tile and Stone Grout sealers, apply at a rate of 500 to 1,500 sq. ft. per coat per gallon, depending on type of stone (slate), porosity and texture of the surface, temperature, humidity and method of application.
   d. For exterior Stone Tile applications, provide two coats of sealer per manufacturer's written recommended rate of application, allowing the proper time between coats for curing (30 minutes) as recommended by the manufacturer.

1) Protect newly coated surface from traffic and moisture for a period of twelve hours.

E. Curing:
1. Apply Curing Sheet over all tiled surfaces.
   a. Lap sheets 4 inches minimum and seal against escape of moisture.
   b. Leave Curing Sheets in place a minimum of 3 days.

3.4 CLEANING

A. Clean in accordance with Specification Section - PROJECT CLOSEOUT.
1. Clean any soiled surfaces immediately.
2. Finish shall be clean and ready for the application of any additional finishes.
3. In accordance with manufacturer's written instructions and recommendations.
4. Wash down cured tile work with cleaner mixed and applied in accordance with manufacturer's written instructions.
5. Rinse tile-work thoroughly, with clean water, and polish with soft-cloth.

B. Cleaning, Removal, Replacement and Repointing of Existing Tile:
1. Clean all existing tile and grout of all dirt, oils and graffiti.
2. Remove all existing tile which has been damaged, cracked, drilled, or otherwise disfigured from its original shape and installation (including Graffiti which can not be cleaned off).
   a. Provide in the Base Bid for an ALLOWANCE of 100 sq. ft. maximum of tile areas selected by the Architect (excluding expected tile replacement for blocking or new walls) for additional work required to complete the modernization.
3. Repoint all grout conditions subject to tile removal and replacement, and repoint all grout conditions where the existing grout has been damaged, cracked, drilled, or otherwise disfigured from its original shape and installation. Repoint with Latex-Portland Cement Mortar.
4. Install new tile in locations subject to tile removal. Install tile colors (maximum of 4 color choices) in locations selected by the Inspector and Architect.

3.5 PROTECTION

A. Protection from weather:
1. Protect newly installed work from freezing for 24 hours after erection, installation or application.

B. Protection from traffic:
1. Prohibit all foot and wheel traffic from using newly tiled floor for at least 3 days.
2. Provide final protection and maintain conditions, in a manner acceptable to manufacturer and installer, which ensures the work of this section being without damage or deterioration until the time of Substantial Completion.

END OF SECTION

SECTION 095000 – ACOUSTICAL CEILINGS

PART 1 - GENERAL

1.1 SUMMARY

A. This Section includes the following:
   1. Provide all material, labor, equipment and services necessary to completely install all Acoustical Ceiling Materials, Suspension Systems, accessories and other related items necessary to complete the Project as indicated by the Contract Documents.

B. Related Sections: The following Project Manual Sections contain requirements that relate to this section:
   1. ALL DIVISION 00 SPECIFICATION SECTIONS.
   2. ALL DIVISION 01 SPECIFICATION SECTIONS.
   3. 04 22 00 CONCRETE MASONRY UNITS
   4. 05 12 00 STEEL AND FABRICATIONS
   5. 05 30 00 METAL DECK
   6. 06 10 00 ROUGH CARPENTRY
   7. 06 17 13 COMPOSITE LUMBER
   8. 06 18 00 GLUE-LAMINATED CONSTRUCTION
   9. 06 17 33 WOOD JOISTS
   10. 07 21 00 INSULATION
   11. 09 24 00 CEMENT PLASTER
   12. 09 29 00 GYPSUM BOARD
   13. 09 72 00 WALL COVERINGS
   14. 09 91 00 PAINTING
   15. 10 05 00 MISCELLANEOUS SPECIALTIES
   16. ALL SPECIFICATION SECTIONS IN THE FACILITY SERVICES SUBGROUP.

1.2 REFERENCES

A. Standards:
   1. In accordance with the following standards:
      a. CISCA Ceilings & Interior Systems Construction Association.

1.3 SYSTEM DESCRIPTION

A. Suspension System Design Requirements: In accordance with allowable values and properties assigned and approved by CBC.
   1. Heavy Duty in accordance with ASTM C 635 "Standard Specification for the Manufacture, Performance, and Testing of Metal Suspension Systems for Acoustical Tile and lay-in Panel Ceilings," ASTM E 580 “Practice for Application of Ceiling Suspension Systems for Acoustical Tile and Lay-in Panels in Areas Requiring Seismic Restraint”, Section 5.1, ASCE 7 as modified by CBC Sections 1616A.1.20, 2506.2.1, and IR 25-2.13.

2. Design Weight: Total Weight does not exceed four (4) pounds per square foot, including air conditioning grilles and light fixtures.
3. System is not to support lateral loads from partitions.
4. Fasteners must be capable of sustaining, without failure, hanger wires with 200 lbs. tension load and bracing wires with 440 lbs. tension load.

1.4 SUBMITTALS

A. Submit in accordance with Specification Section - SUBMITTAL PROCEDURES:
1. Product Data.
   a. Manufacturers Product Information for each type of Acoustical Ceiling Tile or Panel scheduled to be used.
   b. Manufacturers Product Information for each component of the Suspension System specified or scheduled.
2. Shop Drawings.
   a. Submit shop drawings from manufacturer detailing ceiling suspension system assemblies and indicating dimensions, method of field assembly (including hanger and bracing wires, compression struts, wall angle attachments), other components, and location and detail of each suspension system grid connection.
      1) Submit drawings showing details of Hanger Wires, Brace Wires, expansion joint locations, and Compression Strut connections to structure and to suspension system.
3. Samples.
   a. Provide 4 to 6 inch square sample for each type of Acoustical Ceiling Tile or Panel scheduled to be used.
   b. Provide 12 inch lineal sample of Suspension System components for each type of system specified or scheduled.
4. Quality Assurance/Control Submittals:
   a. Test Reports:
      1) Tension Tests of acoustical ceiling wire anchors provided by Testing Agency.
   b. Certificates:
      1) General Construction: Certification signed by the Contractor on Contractor's letterhead.
      2) Certificates signed by manufacturers of Acoustical Ceiling components certifying that their products comply with specified requirements.
   c. Manufacturer's Written Instructions:
      1) Manufacturer's written instructions showing their suspension grid installation methods.
5. Closeout Submittals in accordance with the following:
   a. In accordance with Specification Section - PROJECT DOCUMENTS.
   b. Warranty in accordance with Specification Section - WARRANTIES.

1.5 QUALITY ASSURANCE

A. Qualifications:
1. Material Qualifications:

a. Where fire-rated Acoustical Ceiling assemblies are indicated, provide materials and construction identical to those of assemblies tested for fire resistance per UL or ASTM E 119 "Test Methods for Fire Tests of Building Construction and Materials", by an independent testing and inspecting agency acceptable to the California State Fire Marshal.
b. Source Limitations:
1) Acoustical Ceiling Tiles or Panels: Obtain each type through one source from a single manufacturer.
2) Suspension Systems: Obtain each type through one source from a single manufacturer.

2. Installer Qualifications:
a. Engage an experienced Installer who has successfully completed three (3) projects of similar scope and size to that indicated for this Project.
1) Helpers and apprentices used for such work shall be under full and constant supervision at all times by thoroughly skilled Acoustical Ceiling and Suspension System installers.
2) In the acceptance or rejection of installed Acoustical Ceiling or Suspension Systems, no allowance will be made for lack of skill on the part of the installers.

3. Manufacturer/Supplier Qualifications:
a. Firm experienced in successfully producing/supplying products similar to that indicated for this Project, with sufficient production/supply capacity to produce/supply required units without causing delay in the work.
b. Products, materials and evaluation reports to comply with IR-A5.

B. Regulatory Requirements:
1. In accordance with Specification Section - REGULATORY REQUIREMENTS, and the following:
a. CARB Materials and equipment used for this Project shall comply with the current applicable regulations of the California Air Resources Board (CARB) and the Environmental Protection Agency (EPA), in the area where the project is located.
b. CBC California Building Code (CBC 803.1.1)
c. CSFM California State Fire Marshal.
d. FDA Food and Drug Administration, a department of US Department of Health and Human Services.
e. IR Interpretation of Regulations.
f. USDA/FSIS United States Department of Agriculture., Food Safety and Inspection Service.

C. Certificates:
1. General Construction: Contractor to certify that work provided, meets or exceeds the requirements of this section.
2. Products: Manufacturers of Acoustical Ceiling components shall certify that their products comply with specified requirements.

D. Meetings:
1. Pre-Installation: Scheduled by the Contractor prior to the start of work.
a. Coordinate the work with other work being performed.
b. Identify any potential problems that may impede planned progress and proper installation of work regarding quality of installation and warranty requirements.

2. Progress: Scheduled by the Contractor during the performance of the work.
   a. Review for proper installation of work progress.
   b. Identify any installation problems and acceptable corrective measures.
   c. Identify any measures to maintain or regain project schedule if necessary.
3. Completion: Scheduled by the Contractor upon proper completion of the work.
   a. Inspect and identify any problems that may impede issuance of warranties or guaranties.
   b. Maintain installed work until the Notice of Substantial Completion has been executed.

1.6 DELIVERY, STORAGE, AND HANDLING

A. Packing, shipping, handling, and unloading:
   1. Products shall be handled in such a manner as to assure that they are free from dents, scratches and other damage.

B. Acceptance at Site:
   1. Products must be in manufacturer's original unopened containers with labels indicating brand name, model, and grade.
   2. Damaged products will not be accepted.

C. Storage and protection:
   1. Products shall be stored in a fully enclosed, conditioned space and protected against damage from moisture, humidity, temperature extremes, direct sunlight, surface contamination and other causes.

1.7 PROJECT CONDITIONS

A. Environmental requirements:
   1. Do not install acoustical ceilings until spaces are enclosed and weatherproof.
   2. Wet work and dry work in spaces is completed, dry and dust free.
   3. Work above ceilings is completed.
   4. Ambient temperature and humidity conditions are maintained at the levels indicated for Project when occupied for its intended use.

B. Existing Conditions:
   1. Examine site and compare it with the drawings and specifications. Thoroughly investigate and verify conditions under which the work is to be performed. No allowance will be made for extra work resulting from negligence or failure to be acquainted with all available information concerning conditions necessary to estimate the difficulty or cost of the work.

1.8 SEQUENCING AND SCHEDULING

A. Coordination:
   1. Coordinate layout and installation of Acoustical Ceiling Tiles, Panels and the Suspension Systems with other construction that penetrates ceilings or is supported, including light fixtures, HVAC equipment, smoke monitoring and fire-suppression systems.

1.9 WARRANTY

A. Contractor's General Warranty:
1. In accordance with Specification Section - WARRANTIES.

B. Manufacturer’s Warranty:
1. In accordance with manufacturer's written standard warranty:
a. Warranty Period One (1) Year.

C. Installer's Warranty:
1. In accordance with the terms of the Specification Section - WARRANTIES:
a. Warranty period [One (1) Year.][Five (5) years.]

PART 2 - PRODUCTS

2.1 MANUFACTURERS

A. Products specified are from companies listed below, or approved equivalent. These products listed herein establish the size, pattern, color range and function selected by the Architect for this Project. Manufacturers listed as acceptable alternative manufacturers must still comply with the requirements of the products listed in order to be approved as an equivalent during the Submittal Process. If the acceptable alternative manufacturers listed are not approved during the Submittal Process due to non-compliance with the contract documents, then the Contractor shall submit product specified.
1. Specified Tile and Panel product manufacturer:
a. ARMSTRONG WORLD INDUSTRIES.
b. Acceptable alternative manufacturers:
1) CERTAINTEED.
2) UNITED STATES GYPSUM COMPANY, USG INTERIORS.
2. Specified Suspension System product manufacturer:
a. ARMSTRONG WORLD INDUSTRIES.
b. Acceptable alternative manufacturers:
1) CHICAGO METALLIC CORPORATION.

B. Products from other manufacturers not listed must submit in accordance with Specification Section - SUBSTITUTION PROCEDURES.

2.2 MATERIALS

A. Tile or Panel:
1. General:
a. Standard: Provide manufacturer's standard tile or panels of configuration indicated that comply with ASTM E 1264 "Standard Classification for Acoustical Ceiling Products" classifications as designed by type, pattern, acoustical rating, light reflectance, and fire-rating, unless otherwise indicated.
b. Colors and Patterns: Match appearance characteristics indicated for each product type.

c. Antimicrobial Treated:
   1) Coating-Based: Provide tile or panel face surfaces (front and back) with coated antimicrobial treatment consisting of manufacturer's standard formulation with fungicide added to inhibit growth of mold and mildew and showing no mold or mildew growth when tested according to ASTM D 3273 "Standard Test method for Resistance to Growth of Mold on the Surface of Interior Coatings in an Environmental Chamber".
   2) Panel-Base: Provide tiles or panels treated with manufacturers standard antimicrobial solution that inhibits fungus, mold, mildew, gram-positive and gram-negative bacteria.

2. See the Acoustical Tile and Panel Schedule at the end of this section for specified tile or panel types.

B. Suspension Systems:
1. General:
   a. Classification of Suspension System Grid is Heavy Duty in accordance with ASTM C 635 "Standard Specification for the Manufacture, Performance, and Testing of Metal Suspension Systems for Acoustical Tile and lay-in Panel Ceilings," ASTM E 580 “Practice for Application of Ceiling Suspension Systems for Acoustical Tile and Lay-in Panels in Areas Requiring Seismic Restraint”, Section 5.1, ASCE 7 as modified by CBC Sections 1616A.1.20, 2506.2.1, and IR 25-2.13.
   b. Provide Underwriter's Laboratory (UL) design number or California State Fire Marshal (CSFM) Listing number for the fire-rated ceiling assembly.
      1) The components and installation details must conform in every respect with the UL or CSFM approval for the design number specified.
      2) Custom designs which combine components from different approval designs but have not been tested as a complete assembly are not acceptable.
      3) See Exposed Grid at end of this section for specified system numbers.
2. Wire:
   a. Soft temper, Class 1 zinc coating, in accordance with ASTM A 641 "Specification for Zinc-Coated (Galvanized) Carbon Steel Wire".
      1) Hanger: 12 gage (0.106 inch diameter).
      2) Brace: 12 gage (0.106 inch diameter).
3. Clip Attachments:
   a. General: Fabricate from corrosion-resistant material with holes or loops for attaching hanger and brace wires.
      1) Ceiling Clips: 3/4" wide x 13 gage, galvanized steel.
      2) Steel Straps:
         a) 1" wide x length as required, 12 gage galvanized steel.
         b) 3" wide x 4" long x 12 gage galvanized steel.
4. Grid:
   a. Grid System shall be manufactured from commercial quality galvanized steel.
   b. All Tee Grid System Numbers are from ARMSTRONG WORLD INDUSTRIES.
      1) Exposed Non-Rated 15/16" Tee Grid System "Prelude XL" (P-XL).
      2) Exposed Fire-Rated 15/16" Tee Grid System, "Prelude XL Fire Guard" (P-XL).
      3) Exposed Non-Rated 9/16" Tee Grid System"Suprafine XL" (S-XL).
   c. Main Runners:
      1) Main Runner – Non-Rated 15/16" #P-XL 7301.
      2) Main Runner – Fire-Rated 15/16" #P-XL 8301.
      3) Main Runner - Non-Rated 9/16" #S-XL 7501.

4) Capped, Double-Web roll-formed from cold-rolled steel sheets, pre-painted with factory punched cross runner slots, hanger holes and integral bayonet style and couplings.
5) Fire-rated: Manufactured with fire-expansion reliefs.

d. Cross Runners:
1) 2' Non-Rated Cross Runner 15/16" #P-XL 7328.
2) 4' Non-Rated Cross Runner 15/16" #P-XL 7341.
3) 2' Fire-Rated Cross Runner 15/16" #P-XL 8323.
4) 4' Fire-Rated Cross Runner 15/16" #P-XL 8341.
5) 2' Non-Rated Cross Runner 9/16" #S-XL 7520.
6) 4' Non-Rated Cross Runner 9/16" #S-XL 7540.
7) Capped, Double-Web roll-formed from cold-rolled steel sheets, pre-painted with factory punched cross runner slots and hanger holes.
8) Fire-rated: Manufactured with fire-expansion reliefs.

e. Wall Angles:
1) "Angle" Ceiling Edge Trim, hemmed exposed edges, 7/8" x 7/8", #7800.
2) "Angle" Ceiling Edge Trim, hemmed exposed edges, 2" x 2", #7808.
3) Roll-formed of sheet metal of same gage and finish as the main runners.
4) Provide wall angles fabricated to diameter required to fit circular penetrations of ceilings exactly.

f. Panel Hold Down Clips:
1) Hold Down Clip #P-XL 414.

g. Compression Struts (Metal angles, galvanized steel):
1) 1/8 inch thick x 1 inch x 1 inch 800 lbs./1000 feet weight.
2) 3/16 inch thick x 1-1/4 inch x 1-1/4 inch 1,480 lbs./1000 feet weight.
3) 3/16 inch thick x 1-1/2 inch x 1-1/2 inch 1,800 lbs./1000 feet weight.
4) 3/16 inch thick x 1-3/4 inch x 1-3/4 inch 2,120 lbs./1000 feet weight.
5) 3/16 inch thick x 2 inch x 2 inch 2,440 lbs./1000 feet weight.
6) 3/16 inch thick x 2 inch x 2-1/2 inch 3,070 lbs./1000 feet weight.
7) 3/16 inch thick x 3 inch x 3 inch 3,710 lbs./1000 feet weight.
8) 1/4 inch thick x 3-1/2 inch x 3-1/2 inch 5,800 lbs./1000 feet weight.
9) 1/4 inch thick x 4 inch x 4 inch 6,600 lbs./1000 feet weight
10) Alternate Compression Struts Refer to drawings.
a) Must be submitted to and approved by DSAAHJ.

h. Seismic Clips:
1) Seismic Perimeter Clips #BERC2.

i. Cold Rolled Channels, 16 gage galvanized steel:
1) 1-1/2" x 17/32" flange 475 lbs/1000 feet weight.

2.3 ACCESSORIES

A. Fasteners:
1. Wood Construction:
a. Provide corrosion-resistant materials.
b. Eye screws, minimum 1/4 inch diameter, 1-1/4 inch minimum embedment.
c. Staples, 1-1/2 inch x 0.148 inch diameter (9 gage).
d. Nails, STRONGHOLD "J" nails.
2. Steel Framing:
a. Shot-in Anchors.
3. Metal Deck or Metal Deck without Structural Concrete:
a. Self-tapping Screws.

4. Metal Deck or Metal Deck with Structural Concrete or Concrete:
   a. Shot-in Anchors (hanger wire only).
   b. Drilled-in Anchors.
5. Suspension System Fasteners, runner to wall angle:
   a. Pop rivets as standard with the manufacturer, heads to match the finish of the main runners.
      1) Pop-rivets, screws or other attachments are not acceptable unless specifically detailed on the manufacturer's drawings and approved by UL and the CSFM.

B. Adhesives:
1. Provide adhesives that comply with all requirements of ASTM D 1779 "Standard Specification for Adhesive for Acoustical Materials", for non-rated and fire-rated assemblies, and shall be compatible with the substrate to which the tile is to be installed as well as the tile material selected, and shall be UL Labeled for Class 0 - 25 Flame Spread..

C. Sealants:
1. Acoustical Sealant for Exposed and Concealed Joints: Manufacturer's standard non-sag, paintable, non-staining latex sealant complying with ASTM C 834 "Specification for Latex Sealants", and effective in reducing airborne sound transmission through perimeter joints and openings in building construction as demonstrated by testing representative assemblies according to ASTM E 90 "Test Method for Laboratory Measurement of Airborne Sound Transmission Loss of Building Partitions and Elements".
2. Acoustical Sealant for Concealed Joints: Manufacturer's standard non-drying, non-hardening, non-skinning, non-staining, gunnable, synthetic-rubber sealant recommended for sealing interior concealed joints to reduce airborne sound transmission.

D. Other Materials: All other miscellaneous materials, not specifically described, but required for a complete and proper installation of acoustical ceilings, shall be as selected by the Contractor subject to the approval of the Architect.

2.4 FINISHES

A. Factory Finish:
1. Suspension System: Manufacturer's standard baked-on enamel finish to all members. All fasteners shall match the main runner finishes.
   a. General: Comply with NAAMM's "Metal Finishes manual for Architectural and Metal Products" for recommendations for applying and designating finishes.
2. Tile or Panel: Refer to Tile and Panel Schedule for finishes.

PART 3 - EXECUTION

3.1 EXAMINATION

A. Site verification of conditions:

1. Prior to the execution of the work under this specification section, examine substrates, areas, and conditions, including structural framing to which acoustical ceilings attach or abut, with installer present, for compliance with requirements specified in this and other Sections that affect ceiling installation and anchorage and with requirements for installation tolerances and other conditions affecting performance of acoustical ceilings.
2. Report unacceptable conditions to the Architect. Do not begin work until unacceptable conditions have been corrected.
3. Execution of work under this specification section shall constitute acceptance of existing conditions.

3.2 PREPARATION

A. Coordination:
1. Coordinate work under this specification section with work specified under other sections to ensure proper and adequate interface of work.
2. Coordinate proper placement of ceiling mounted tracks, accessories, light fixtures, HVAC registers and other items which are to be integrated with acoustical ceilings.
3. Measure each ceiling area and establish layout of acoustical tiles or panels to balance border widths at opposite edges of each ceiling. Avoid using less-than-half-width tiles or panels at borders, and comply with layout shown on reflected ceiling plans.

B. Protection:
1. Do not begin work until all rooms have been protected against the weather.
2. Protect all adjacent surfaces from drips, spray, air pollution of surrounding environment, and other damage from work under this specification section.

C. Surface preparation:
1. Prepare surface in accordance with manufacturer's written instructions and recommendations.
2. Clean substrates of substances (oil, grease, rolling compounds, incompatible primers, loose mill scale, etc.) which could impair bond of materials specified within this section.

3.3 INSTALLATION

A. General:
1. In accordance with manufacturer's written instructions and recommendations along with CISCA's "Ceiling Systems Handbook" and USDA.
2. In accordance with approved Submittals.
3. In accordance with Regulatory Requirements.
4. Installation shall comply with ASTM C 636 ""Practice for Installation of Metal Ceiling Suspension Systems for Acoustical Tile and Lay-In Panels", and ASTM E 580 “Practice for Application of Ceiling Suspension Systems for Acoustical Tile and Lay-in Panels in Areas Requiring Seismic Restraint”, Section 5.2.
5. Installation shall also comply with CBC Section 1616A.1.20, 2506.2.1, and R 25-2.13.

B. Layout:
1. Lines shall be straight and true.
2. Set plumb, level, and square.

C. Suspension System:

1. 12 gage (minimum) hanger wires may be used for up to and including 4'-0" x 4'-0" grid spacing and attached to main runners. Splices will not be permitted in any hanger wires unless specifically approved by DSA/SSSAHJ.
2. Provide 12 gage hanger wires at ends of all main and cross runners within 8" from the support or within 1/4 of the length of the end tee, whichever is least, for the perimeter of the ceiling area.
    a. End connections for runners, which are designed and detailed to resist the applied horizontal forces may be used in lieu of the 12 gage hanger wires subject to DSA/SSSAHJ review and approval.
    b. Perimeter wires are not required when the length of the end tee is 8" or less.
3. Provide trapeze or other supplementary support members at obstructions to maintain hanger spacing.
    a. Provide additional hangers, struts or braces as required at all ceiling breaks, soffits or discontinuous areas.
    b. Hanger wires that are more than 1 in 6 out of plumb are to have counter-sloping wires.
4. Ceiling grid members may be attached to not more than 2 adjacent walls. Ceiling grid members should be at least 3/4 inch free of other walls.
    a. If walls run diagonally to ceiling grid system runners, one end of main and cross runners should be free and a minimum of 3/4 inch clear of wall.
    b. Pop rivets, screws, or other attachments in fire-rated ceilings shall not be acceptable unless specifically detailed on the manufacturer's drawings and approved by UL and DSA/FLSAHJ.
5. At the perimeter of the ceiling area where main or cross runners are not connected to the adjacent wall, provide Seismic Perimeter Clip, installed in accordance with manufacturer's instructions and ICC-ES Evaluation Report.
6. Provide bracing assemblies consisting of a compression strut and slotted angle spacer of four (4) 12 gage splayed bracing wires oriented 90 degrees from each other.
    a. Bracing assemblies shall be provided for each 144 square feet of ceiling area.
        1) Spaced not more than 12 feet by 12 feet on center.
    b. Bracing assemblies shall be located not more than 1/2 the above spacing from each perimeter wall or at the edge of vertical ceiling offsets.
    c. The slope of these wires should not exceed 45 degrees from the plane of the ceiling and should be taut without causing the ceiling to lift.
    d. Splices in bracing wires are not permitted unless specifically approved by DSA/SSSAHJ.
    e. Fire-Rated Asemblies shall have a bracing assembly for each 96 square feet.
        1) The first bracing assembly is required not more than four feet (4'-0") from each wall.
        2) A minimum of one bracing assembly is required between any two adjacent expansion cut-outs on runners being braced.
    f. Bracing assemblies are not required where the ceiling area is:
        1) 144 sq.ft. or less.
7. Fasten hanger wires with not less than 3 tight turns. Fasten bracing wires with 4 tight turns.
    a. Make all tight turns within a distance of 1-1/2 inches.
    b. Hanger or bracing wire anchors to the structure should be installed in such a manner that the direction of the wire aligns as closely as possible with the direction of the forces acting on the wire.
8. Separate all ceiling hanging and bracing wires at least 6 inches from all unbraced ducts, pipes, conduit, etc.

a. It is acceptable to attach lightweight items, such as single electrical conduit not exceeding 3/4" nominal diameter, to hanger wires using connectors acceptable to DSA/SSSAHJ.

9. Attach all light fixtures and ceiling mounted air terminals or services to the ceiling grid runners to resist a horizontal force equal to the weight of the fixtures.
   a. Approved screws or fasteners are required.
10. Flush or recessed light fixtures weighing less than 56 pounds and mechanical terminals and services weighing less than 20 lbs. may be supported directly on the runners of a heavy duty grid system but, in addition, they must have a minimum of two (2) 12 gage slack safety wires attached to the fixture at diagonal corners and anchored to the structure above.
   a. All 4 ft. x 4 ft. fixtures must have slack safety wires at each corner.
11. All flush or recessed light fixtures weighing 56 pounds or more and mechanical terminals and services weighing 20 lbs. or more shall be independently supported by not less than four (4) taut #12 gage wires each attached to the fixture.
   a. Wires and their attachment to the structure must be capable of supporting 4 times the weight of the unit and attached to the structure above regardless of the type of ceiling grid system used.
12. Support surface mounted light fixtures by at least two positive devices which surround the runner and which are each supported from the structure above with 12 gage wire.
   a. Spring clips or clamps that connect only the runner are not acceptable.
   b. Provide additional supports when light fixtures are 8'-0" or longer.
13. Support pendant mounted light fixtures directly from the structure above with hanger wires or cables passing through each pendant hanger and capable of supporting four (4) times the weight of the fixture.
   a. Bracing assembly is required where the pendant hanger penetrates the ceiling.
   b. Pendant hanger is required to attach to the bracing assembly to transmit horizontal forces.
   c. Maximum spacing between supports shall not exceed 8 feet.
14. Ceiling Edge Condition:
   a. Where Grid System abuts wall, fasten wall angles to framing in wall structure.
      1) At Wood Framing, attach to backing with No. 10 x 3" Screws at 16" o.c.
      2) At Metal Framing, attach to metal framing backing with No. 8 self-tapping sheet metal screws at 16" o.c.
   b. Where Grid System terminates free from wall, fasten wall angles to Grid system with Fasteners. No screw or rivets shall appear on any exposed surface.
15. Supplemental Support Members:
   a. Where the width of ducts or other obstructions interfere with typical hangers and bracing assemblies, provide and install supplemental members and hangers in the form of trapeze or equivalent devices.
   b. Provide additional hangers, struts, or braces at all ceiling breaks, soffits, or discontinuous areas.
   c. Hanger wires that are more than one (1) horizontal in six (6) vertical shall have counter-sloping wires.
16. Expansion Joints:
   a. Expansion Joints shall be provided and installed in the ceiling at intersections of corridors and junctions of corridors with lobbies or other similar areas.
17. Expansion Joints shall be provided and installed in ceiling areas exceeding 2,500 sq.ft. in order to separate ceilings into areas not exceeding 2,500 sq.ft.

D. Suspended Acoustical Ceiling Panels:

1. Install acoustical ceiling panels with undamaged edges and fit accurately into suspension system runners and wall angles. Scribe and cut panels at borders and penetrations to provide a neat, precise fit.
   a. Install panels with pattern running in one direction.
2. Paint cut edges of panels remaining exposed after installation.
   a. Match color of exposed panel surfaces using coating recommended in writing for this purpose by acoustical ceiling manufacturer.
3. Install hold down clips at all Fire-Rated acoustical ceiling assemblies, food preparation areas, and at locker/shower areas.
4. Penetrations through the ceiling for sprinkler heads and other similar devices that are not integrally tied to the ceiling system in the lateral direction shall have a two (2) inch oversized ring, sleeve, or adapter through the ceiling tile to allow free movement of one (1) inch in all horizontal directions. Alternatively, swing joints may be provided per ASTM E 580, Section 5.2.8.5.

E. Adhesively applied Acoustical Tiles:
1. Installation shall comply to ASTM D 1779 "Standard Specification for Adhesive for Acoustical Materials".

3.4 FIELD QUALITY CONTROL

A. Site Tests:
1. Testing Agency: The Owner's Testing Laboratory Agency shall perform field tests and Inspections and prepare test reports.
   a. Testing and inspecting of completed installations of acoustical ceiling fasteners and anchors shall take place in successive stages, in areas of extent and using methods as follows.
   b. Do not proceed with installations of acoustical panel ceiling hangers for the next area until test results for previously completed installations of acoustical panel ceiling hangers show compliance with requirements.
2. Extent of Each Test Area: When installation of ceiling suspension systems on each floor has reached 20 percent completion but no panels have been installed:
   a. Concrete Anchors:
      1) Must be capable of sustaining, without failure, a load equal to 200 lbs. tension for hanger wires and 440 lbs. tension for bracing wires by construction as determined by testing according to ASTM E 488 "Test methods for Strength of Anchors in Concrete and Masonry Elements", by a qualified independent testing agency.
         a) Hanger Wire Anchors 1 in 10 must be field tested.
         b) Bracing Wire Anchors 1 in 2 must be field tested.
3. Remove and replace acoustical panel ceiling hangers where test results indicate that they do not comply with specified requirements.
4. Additional testing and inspecting, at Contractor's expense, will be performed to determine compliance of replaced or additional work with specified requirements.
   a. When testing discovers fasteners and anchors that do not comply with requirements, testing agency will test those anchors not previously tested until 20 pass consecutively and then will resume initial testing frequency.

B. Inspection:
1. As required by Regulatory Requirements.

2. Schedule inspections and notify the Architect, Project Inspector and any other regulatory agencies of the time at least 48 hours prior to the inspection.
3. No work shall be without the inspections required by Regulatory Requirements.

3.5 CLEANING

A. Clean in accordance with Specification Section - PROJECT CLOSEOUT.
1. Clean any soiled surfaces immediately.
2. Clean any soiled surfaces at the end of each day, minimum.
3. Finish shall be clean and ready for the application of any additional finishes.

B. Clean exposed surfaces of acoustical ceilings, including trim, edge moldings, and suspension system members. Comply with manufacturers written instructions for cleaning and touchup of minor finish damage. Remove and replace ceiling components that cannot be successfully cleaned and repaired to permanently eliminate evidence of damage.

3.6 SCHEDULES

A. Tile and Panel Schedule:
1. TYPE ACT-I:
   a. Design "Fissured Medium Texture", No. 755, Minaboard Panel.
   b. Manufacturer ARMSTRONG WORLD INDUSTRIES.
   c. Material:
      1) Wet-Formed mineral fiber, with factory-applied vinyl latex paint surface finish.
   d. Size 24" x 48" x 5/8" panel – "Square Cut" lay-in edge.
   e. Mounting 15/16" Non-Rated exposed tee grid.
   f. NRC Rating 0.55.
   g. CAC 30.
   h. Light Reflectance per ASTM E 1477 "Test method for Luminous Reflectance Factor of Acoustical Materials by Use of Integrating-Sphere Reflectometers":
      1) 0.81.
   i. ASTM Classification per ASTM E 1264 "Classification for Acoustical Ceiling Products":
      1) Type III, Form 2, Pattern C D.
   j. Class A per ASTM E 84 "Test method for Surface burning Characteristics of Building Materials":
      1) Flame Spread Index 25 or under.
      2) Smoke Density Developed Index 50 or less.
   k. Color "White".
   l. Antimicrobial Treatment None.
2. TYPE ACT-II:
   a. Design "Fissured Medium Texture", No. 895, Minaboard "FireGuard" Panel.
   b. Manufacturer ARMSTRONG WORLD INDUSTRIES.
   c. Material:
      1) Wet-Formed mineral fiber, with factory-applied vinyl latex paint surface finish.
   d. Size 24" x 48" x 5/8" panel – "Square Cut" lay-in edge.
   e. Mounting 15/16" Fire-Rated exposed tee grid.
   f. NRC Rating 0.55.

g. CAC 35.
h. Light Reflectance per ASTM E 1477 "Test method for Luminous Reflectance Factor of Acoustical Materials by Use of Integrating-Sphere Reflectometers":
   1) 0.81.
i. ASTM Classification per ASTM E 1264 "Classification for Acoustical Ceiling Products":
   1) Type III, Form 2, Pattern C D.
j. Class A per ASTM E 84 "Test method for Surface burning Characteristics of Building Materials":
   1) Flame Spread Index 25 or under.
   2) Smoke Density Developed Index 50 or less.
k. Color "White".
l. Antimicrobial Treatment None.

3. TYPE ACT-III:
   a. Manufacturer ARMSTRONG WORLD INDUSTRIES.
   b. Design "Fine Fissured Texture", No. 741, Tile.
   c. Material:
      1) Wet-Formed mineral fiber, with factory-applied vinyl latex paint surface finish.
   d. Size 12" x 12" x 3/4" tile – concealed Beveled edge (K4C4).
   e. Mounting Adhesively applied over 5/8" gypsum board.
   f. NRC Rating 0.65.
   g. CAC 40.
   h. Light Reflectance per ASTM E1477 "Test method for Luminous Reflectance Factor of Acoustical Materials by Use of Integrating-Sphere Reflectometers":
      1) 0.86.
   i. ASTM Classification per ASTM E 1264 "Classification for Acoustical Ceiling Products":
      1) Type III, Form 1, Pattern E L.
   j. Class A per ASTM E84 "Test method for Surface burning Characteristics of Building Materials":
      1) Flame Spread Index 25 or under.
      2) Smoke Density Developed Index 50 or less.
   k. Color "White".
   l. Antimicrobial Treatment None.
4. TYPE ACT-IV (NOT USED):
5. TYPE ACT-V:
   a. Manufacturer ARMSTRONG WORLD INDUSTRIES.
   b. Design "Cirrus Tegular, Fine Texture", No. 584, Panel.
   c. Material:
      1) Wet-Formed mineral fiber, with factory-applied vinyl latex paint surface finish.
   d. Size 24" x 24" x 3/4" panel – Angled "Tegular" lay-in edge.
   e. Mounting 15/16" Non-Rated exposed tee grid.
   f. NRC Rating 0.70.
   g. CAC Range 35.
   h. Light Reflectance per ASTM E 1477 "Test method for Luminous Reflectance Factor of Acoustical Materials by Use of Integrating-Sphere Reflectometers":
      1) 0.86.
   i. ASTM Classification per ASTM E 1264 "Classification for Acoustical Ceiling Products":
      1) Type III, Form 1, Pattern E L.

j. Class A per ASTM E 84 "Test method for Surface burning Characteristics of Building Materials":
   1) Flame Spread Index 25 or under.
   2) Smoke Density Developed Index 50 or less.
k. Color "White".
l. Antimicrobial Treatment None.

6. TYPE ACT-VI:
   a. Manufacturer ARMSTRONG WORLD INDUSTRIES.
   b. Design "Cirrus Tegular, Fine Texture", "FireGuard", No. 578, Panel.
   c. Material:
      1) Wet-Formed mineral fiber, with factory-applied vinyl latex paint surface finish.
   d. Size 24" x 24" x 3/4" panel – Angled Tegular lay-in edge.
   e. Mounting 15/16" Fire-Rated exposed tee grid.
   f. NRC Rating 0.35.
   g. CAC 35.
   h. Light Reflectance per ASTM E 1477 "Test method for Luminous Reflectance Factor of Acoustical Materials by Use of Integrating-Sphere Reflectometers":
      1) 0.86.
   i. ASTM Classification per ASTM E 1264 "Classification for Acoustical Ceiling Products":
      1) Type III, Form 1, Pattern E L.
   j. Class A per ASTM E 84 "Test method for Surface burning Characteristics of Building Materials":
      1) Flame Spread Index 25 or under.
      2) Smoke Density Developed Index 50 or less.
   k. Color "White".
   l. Antimicrobial Treatment None.
7. TYPE ACT-VII:
   a. Manufacturer ARMSTRONG WORLD INDUSTRIES.
   b. Design "Cirrus Tegular, Fine Texture", No. 535, Panel.
   c. Material:
      1) Wet-Formed mineral fiber, with factory-applied vinyl latex paint surface finish.
   d. Size 24" x 48" x 3/4" panel – Angled Tegular lay-in edge.
   e. Mounting 15/16" Non-Rated exposed tee grid.
   f. NRC Rating 0.70.
   g. CAC 35.
   h. Light Reflectance per ASTM E 1477 "Test method for Luminous Reflectance Factor of Acoustical Materials by Use of Integrating-Sphere Reflectometers":
      1) 0.86.
   i. ASTM Classification per ASTM E 1264 "Classification for Acoustical Ceiling Products":
      1) Type III, Form 1, Pattern E L.
   j. Class A per ASTM E 84 "Test method for Surface burning Characteristics of Building Materials":
      1) Flame Spread Index 25 or under.
      2) Smoke Density Developed Index 50 or less.
   k. Color "White".
   l. Antimicrobial Treatment None.
8. TYPE ACT-VIII:
   a. Manufacturer ARMSTRONG WORLD INDUSTRIES.

b. Design:
   1) "Ceramaguard", Non-Perforated, Medium Texture, "Fire Guard" No. 605, Fire-Rated Panel.
c. Material:
   1) Ceramic and mineral fiber composite, with a scrubbable factory-applied plastic paint surface finish.
d. Size 24" x 48" x 5/8" panel – "Square-Cut" lay-in edge.
e. Mounting 15/16" Fire-Rated exposed tee grid.
f. NRC Rating N/A.
g. CAC 40.
h. Light Reflectance per ASTM E 1477 "Test method for Luminous Reflectance Factor of Acoustical Materials by Use of Integrating-Sphere Reflectometers":
   1) 0.88.
i. ASTM Classification per ASTM E 1264 "Classification for Acoustical Ceiling Products":
   1) Type XX, Pattern G.
j. Class A per ASTM E 84 "Test method for Surface burning Characteristics of Building Materials":
   1) Flame Spread Index 25 or under.
   2) Smoke Density Developed Index 50 or less.
k. Color "White".
l. Antimicrobial Treatment Inherent.

9. TYPE ACT-IX:
   a. Manufacturer ARMSTRONG WORLD INDUSTRIES.
   b. Design:
      1) "Fine Fissured Ceramaguard", Perforated, Medium Texture "FireGuard" No. 608, Fire-Rated Panel.
   c. Material:
      1) Ceramic and mineral fiber composite, with a scrubbable factory-applied plastic paint surface finish.
   d. Size 24" x 48" x 5/8" panel – Square-Cut lay-in edge.
   e. Mounting 15/16" Fire-Rated exposed tee grid.
   f. NRC Rating 0.55.
   g. CAC 40.
   h. Light Reflectance per ASTM E 1477 "Test method for Luminous Reflectance Factor of Acoustical Materials by Use of Integrating-Sphere Reflectometers":
      1) 0.82.
   i. ASTM Classification per ASTM E 1264 "Classification for Acoustical Ceiling Products":
      1) Type XX, Pattern C E.
   j. Class A per ASTM E 84 "Test method for Surface burning Characteristics of Building Materials":
      1) Flame Spread Index 25 or under.
      2) Smoke Density Developed Index 50 or less.
   k. Color "White".
   l. Antimicrobial Treatment Inherent.

10. TYPE ACT-X: PERFORATED METAL PANEL
   a. Manufacturer: ALPRO ACOUSTICAL SYSTEMS
   b. Design:
      1) Corrugated using Alpro Pattern Type J and perforated with 1/8" diameter holes on 21/64" staggered centers, approximately 13% open area.
      2) Accessories: Provide factory-painted panel screws.

c. Material:
   1) Aluminum 3003-H1 alloy, minimum 0.032" thick per ASTM B209, smooth surface.
   2) Finish: Manufacturer's powder coated to match existing.
d. Size: As large as possible to minimize seams. Panels are manufactured up to 120 inches long.
e. NRC Rating: N/A.
f. Installation: Face Attached.
g. Existing Suspension System: Prelude Plus XL 15/16" system.

END OF SECTION

SECTION 096510 – RESILIENT BASE AND ACCESSORIES

PART 1 - GENERAL

1.1 SUMMARY

A. This Section includes the following:
   1. Provide all material, labor, equipment and services necessary to completely install all Resilient Base and Accessories and other related items necessary to complete the Project as indicated by the Contract Documents.

B. Related Sections: The following Project Manual Sections contain requirements that relate to this section:
   1. ALL DIVISION 00 SPECIFICATION SECTIONS.
   2. ALL DIVISION 01 SPECIFICATION SECTIONS.
   3. 03 30 00 CAST-IN-PLACE CONCRETE
   4. 03 35 10 POLISHED CONCRETE FINISHING
   5. 04 20 00 CONCRETE MASONRY UNITS
   6. 06 10 00 ROUGH CARPENTRY
   7. 06 41 23 MODULAR CASEWORK
   8. 09 24 00 CEMENT PLASTER
   9. 09 29 00 GYPSUM BOARD
   10. 09 65 16 RESILIENT SHEET
   11. 09 68 40 CARPET
   12. 09 72 00 WALL COVERINGS
   13. 09 91 00 PAINTING
   14. 10 05 00 MISCELLANEOUS SPECIALTIES
   15. ALL SPECIFICATION SECTIONS IN THE FACILITY SERVICES SUBGROUP.

1.2 REFERENCES

A. Standards:
   1. In accordance with Specification Section - Regulatory Requirements, and the following standards:
      a. ADAAG Americans with Disabilities Act Accessibilities Guidelines.
      b. RFCI The Resilient Floor Covering Institute.

1.3 SUBMITTALS

A. Submit in accordance with Specification Section - SUBMITTAL PROCEDURES:
   1. Product Data:
      a. For each type of resilient base and accessory indicated.
      b. Manufacturer's full color range (including any standard and premium colors).
      c. Design Data for all compounds, fillers, adhesives, etc.
   2. Samples.
      a. Provide 6 inch linear samples of each piece of trim material specified.

3. Quality Assurance/Control Submittals:
   a. Manufacturer's Written Installation Instructions.
   b. Certificate from resilient base installer that all products supplied for installation comply with local CARB regulations in the area where the project is located controlling the use of Volatile Organic Compounds (VOC's).
   c. Statement of Installer's Qualifications.
4. Closeout Submittals in accordance with Specification Sections in Division One:
   a. Maintenance Data (including recommended polish and buffing procedures) in accordance with Specification Section - PROJECT CLOSEOUT.
   b. Record Documents in accordance with Specification Section – PROJECT DOCUMENTS.
   c. Warranty in accordance with this Specification Section, and Specification Section – WARRANTIES.

1.4 QUALITY ASSURANCE

A. Qualifications:
   1. Installer Qualifications:
      a. Engage an experienced Installer who has successfully completed three (3) projects of similar scope and size to that indicated for this Project, and is competent in the techniques required by the manufacturer.
   2. Manufacturer/Supplier Qualifications:
      a. Firm experienced in successfully producing/supplying products similar to that indicated for this Project, with sufficient production/supply capacity to produce/supply required units without causing delay in the work.

B. Regulatory Requirements:
   1. CARB Materials and equipment used for this Project shall comply with the current applicable regulations of the California Air Resources Board (CARB) and the Environmental Protection Agency (EPA) in the area where the project is located.
   2. CBC California Building Code (CBC 804.1)

C. Meetings:
   1. Pre-Installation: Scheduled by the Contractor prior to the start of work.
      a. Coordinate the work with other work being performed.
      b. Identify any potential problems that may impede planned progress and proper installation of work regarding quality of installation and warranty requirements.
      c. Review delivery, storage, and handling procedures.
      d. Review Project Conditions.
      e. Review subfloor preparation procedures.
   2. Progress: Scheduled by the Contractor during the performance of the work.
      a. Review for proper installation of work progress.
      b. Identify any installation problems and acceptable corrective measures.
      c. Identify any measures to maintain or regain project schedule if necessary.
   3. Completion: Scheduled by the Contractor upon proper completion of the work.
      a. Inspect and identify any problems that may impede issuance of warranties or guaranties.
      b. Maintain installed work until the Notice of Substantial Completion has been executed.

1.5 DELIVERY, STORAGE, AND HANDLING

A. Packing, shipping, handling, and unloading:
1. Products shall be handled in such a manner as to assure that they are free from dents, scratches and other damage.

B. Acceptance at Site:
1. Products must be in manufacturer's original unopened containers with labels indicating brand name, type, color, and size.
2. Damaged products will not be accepted.

C. Storage and protection:
1. Products shall be stored in a dry, protected, interior area above ground on level platforms, six (6) inches above ground, allowing air circulation under stacked units.
a. Cover materials with protective waterproof covering providing for adequate air circulation and ventilation.
b. Maintain temperature in the storage space between fifty (50) degrees Fahrenheit and ninety (90) degrees Fahrenheit.
1) Seven (7) days prior to installation, acclimate products to environmental requirements of the article titled PROJECT CONDITIONS of this specification section, and the Paragraph titled "Environmental Requirements".

1.6 PROJECT CONDITIONS

A. Environmental requirements:
1. Temperature: Maintain temperature in space to receive products at sixty-eight (68) degrees Fahrenheit for two (2) days prior, during, and two (2) days following installation.
a. After this period, maintain a temperature of not less than fifty-five (55) degrees Fahrenheit.
b. After installation, at no such time shall the temperature exceed eighty-five (85) degrees Fahrenheit.

B. Existing Conditions:
1. Examine site and compare it with the drawings and specifications. Thoroughly investigate and verify conditions under which the work is to be performed. No allowance will be made for extra work resulting from negligence or failure to be acquainted with all available information concerning conditions necessary to estimate the difficulty or cost of the work.
2. Field Measurements:
a. Take and be responsible for field measurements as required.
b. Report any significant differences between field dimensions and drawings to the Architect.

1.7 WARRANTY

A. Contractor’s General Warranty:
1. In accordance with Specification Section - WARRANTIES.

B. Manufacturer's Warranty:
1. In accordance with manufacturer's written standard warranty:
a. Rubber Base Two (2) Years.
b. Transitions Two (2) years.

C. Installer's Warranty:
1. In accordance with the terms of the Specification Section - WARRANTIES:
a. Warranty Period Two (2) Years.

PART 2 - PRODUCTS

2.1 MANUFACTURERS

A. These products listed herein establish the size, pattern, color range and function selected by the Architect for this Project. Manufacturers that are listed as acceptable alternative manufacturers and substitutions must still comply with the requirements of this project and the products listed in order to be approved as an equivalent during the Submittal Process. If the acceptable alternative manufacturers listed or substitutions are not approved during the Submittal Process due to non-compliance with the contract documents, then the Contractor shall submit product specified.
1. Rubber Base manufacturer:
a. BURKE FLOORING.
b. Acceptable alternative manufacturers:
1) ROPPE CORPORATION.
2. Transitions manufacturer:
a. BURKE FLOORING.
b. Acceptable alternative manufacturers:
1) ROPPE CORPORATION.
3. Underlayment Compound manufacturer:
a. ARDEX INCORPORATED.
b. Acceptable alternative manufacturers:
1) CHEMREX.
a) A compatible bonding agent is needed for this product to adhere to the Vapor-Alkalinity Control System and be considered as equivalent.
4. Crack and Joint Filler manufacturer:
a. ARDEX INCORPORATED.

B. Products from other manufacturers not listed must submit in accordance with Specification Section - SUBSTITUTION PROCEDURES.

2.2 MATERIALS

A. General:
1. Resilient base and accessories shall be of first quality and the product of one manufacturer.

2. Stair Treads shall be slip resistant by achieving a minimum 0.6 or greater static coefficient of friction as recommended in Appendix A4.5 of the ADAAG by testing per ASTM D 2047 "Test method for Static Coefficient of Friction of Polish-Coated Flooring Surfaces as Measured by the James Machine".
3. Colors and patterns shall be selected from manufacturer's standard line (including premium) except as noted otherwise.
   a. Stair treads, risers, and stringers shall be of the same color or matching color and product line.
4. All resilient base and accessories shall be impervious to water damage.

B. Rubber Base:
1. Shall comply with ASTM F 1861 "Standard Specification for Resilient Wall Base", for Type TS (Vulcanized Rubber), Group 1 (Solid and Homogeneous).
   a. Critical Radiant Flux shall be Class 1, not less than 0.45 W/sq.cm. per ASTM E 648 "Test Method for Critical Radiant Flux of Floor Covering Systems Using a Radiant Heat Energy Source".
2. Base shall be Coved.
3. Base height shall be - refer to Finish Schedule for heights.
4. Thickness shall be 0.125".
5. Provide pre-formed inside and outside base corners from the same dye lot as the rubber base.

C. Transitions:
1. Include molding caps, dividers, edges, cove supports, feature strips, reducers, stair nosings, etc.

2.3 ACCESSORIES

A. Underlayment Compound:
1. Provide free-flowing, self-leveling, pumpable, cement based compound (ARDEX K-15) for applications from 1 inch thick to feathered edges, 4000 psi minimum in accordance with ASTM C 109-modified for air cure only "Test Method for Compressive Strength of Hydraulic Cement Mortars (Using 2-in. Cube Specimens)".
   a. ARDEX "K-15".

B. Crack and Joint Filler:
1. Provide low viscosity rigid polyurethane filler, tensile strength of 4,000 psi minimum, in accordance with ASTM D 638 "Test method for Tensile Properties of Plastics".
   a. ARDEX "ARDIFIX".

C. Concrete Primer (if applicable):
1. Nonstaining type as recommended in writing by flooring manufacturer.

D. Adhesives:
1. Adhesive as recommended in writing by resilient base manufacturer.

PART 3 - EXECUTION

3.1 EXAMINATION

A. Site verification of conditions:
   1. Prior to the execution of the work under this specification section, inspect the installed work executed under other sections of this Project Manual that affect the execution of work under this specification section.
   2. Insure that all flooring has been installed, fitted close to the wall to provide even support to the resilient base, and to insure a tight, smooth fit along the floor.
   3. Report unacceptable conditions to the Architect. Do not begin work until unacceptable conditions have been corrected.
   4. Execution of work under this specification section shall constitute acceptance of existing conditions.

B. Concrete Subfloors:
   1. Verify that concrete slabs comply with ASTMF 710 "Practice for Preparing Concrete Floors to Receive Resilient Flooring".
   2. Verify that substrates are dry and free of curing compounds, sealers, hardeners, and other materials that may interfere with adhesive bond.
   3. Verify that subfloors are free of cracks, ridges, depressions, scale, and foreign deposits.
   4. Evaluate the RH (Relative Humidity) and pH (Alkalinity) for compliance with adhesives and resilient tile manufacturer's written substrate preparation recommendations.
      a. If a Vapor-Alkalinity Control System product has been installed to reduce water vapor emission or phosphates thereby negating the RH and pH Test Results, evaluate products for compatibility with adhesives and resilient base products.
   5. Determine adhesion characteristics by performing bond tests recommended by the resilient base and accessory manufacturer.

3.2 PREPARATION

A. Coordination:
   1. Coordinate work under this specification section with work specified under other sections to ensure proper and adequate interface of work.

B. Protection:
   1. Protect all adjacent surfaces from drips, spray, air pollution of surrounding environment, and other damage from work.

C. Surface preparation:
   1. Prepare surface in accordance with manufacturer's written instructions and recommendations.
   2. Wall substrates to receive resilient base must be completely clean, dry, smooth and free of oil, grease, rust, paint, varnish, shellac, or any other foreign substance.

3.3 INSTALLATION

A. General:
1. In accordance with manufacturer's written instructions and recommendations unless specifically noted otherwise.
2. In accordance with approved submittals.
3. In accordance with Regulatory Requirements.
4. Set plumb, level, and square.

B. Layout:
1. Lines shall be straight and true.
2. Refer to Floor Pattern Drawing(s) in the Interior Color Schedule for transitions in color.

C. Resilient Base installation:
1. For base installations on primed metal or enameled surfaces, provide manufacturer's written recommended co-adhesive method of installation applied to both surfaces with contact bond adhesive.
2. On dry, absorbent surfaces, the base shall be adhered with manufacturer's written recommended adhesive and firmly pressed to the walls.
3. Apply resilient base to walls, columns, pilasters, casework and cabinets in toe spaces, and other permanent fixtures in rooms and areas where base is required.
4. Install resilient base in lengths as long as practicable without gaps at seams and with tops of adjacent pieces aligned.
5. Tightly adhere resilient base to substrate throughout length of piece, with base in continuous contact with horizontal and vertical substrates.
6. Do not stretch resilient base during installation.
7. On masonry surfaces, or other similar irregular substrates, fill voids along top edge of resilient base with manufacturer’s recommended adhesive filler material.
8. Pre-molded Corners: Install pre-molded corners before installing straight pieces.
9. After the installation, remove all excess adhesive before it dries.
10. Allow adhesive to set firm for approximately 24 hours before washing or applying any pressure.

D. Transition installation:
1. Measure and trim to fit transition pieces prior to installing.
2. Use appropriate approved manufacturer written adhesives for each substrate.
3. After installation, immediately remove all excess adhesive before it dries.

3.4 CLEANING

A. Cleaning:
1. Clean in accordance with Specification Section - PROJECT CLOSEOUT.
2. Clean any soiled surfaces immediately.
3. Clean any soiled surfaces at the end of each day, minimum.
4. Finish shall be clean and ready for the application of any additional finishes.
5. In accordance with manufacturer’s written instructions and recommendations.

3.5 PROTECTION

A. Protection from traffic:
   1. Provide final protection and maintain conditions, in a manner acceptable to manufacturer and installer, which ensures the work of this section being without damage or deterioration until the time of Substantial Completion.

END OF SECTION

SECTION 096516 – RESILIENT SHEET

PART 1 - GENERAL

1.1 SUMMARY

A. This Section includes the following:
   1. Provide all material, labor, equipment and services necessary to furnish and install Resilient Sheet Flooring, accessories and other related items necessary to complete the Project as indicated by the Contract Documents unless specifically excluded.

B. Related Sections: The following Project Manual Sections contain requirements that relate to this section:
   1. ALL DIVISION 00 SPECIFICATION SECTIONS.
   2. ALL DIVISION 01 SPECIFICATION SECTIONS.
   3. 03 30 00 CAST-IN-PLACE CONCRETE
   4. 07 18 50 VAPOR-ALKALINITY CONTROL
   5. 09 29 00 GYPSUM BOARD
   6. 09 65 10 RESILIENT BASE AND ACCESSORIES
   7. 09 68 40 CARPET
   8. 10 05 00 MISCELLANEOUS SPECIALTIES
   9. ALL SPECIFICATION SECTIONS IN THE FACILITY SERVICES SUBGROUP.

1.2 REFERENCES

A. Standards:
   1. In accordance with Specification Section - REGULATORY REQUIREMENTS, and the following:
      a. ADAAG Americans with Dissibilities Act Accessibilities Guidelines.
      b. ASTM American Society of Testing Materials
      c. RFCI The Resilient Floor Covering Institute.

1.3 SUBMITTALS

A. Submit in accordance with Specification Section - SUBMITTAL PROCEDURES:
   1. Product Data:
      a. For each type of resilient sheet flooring indicated.
      b. Manufacturer's full color range (including any standard and premium colors).
      c. Design Data for all components, fillers, adhesives, etc.
   2. Shop Drawings:
      a. Seaming Diagrams:
         1) Changes at patterns, colors, and seams shall be identified.
   3. Samples:
      a. Provide 12 inch square sample of each color and pattern indicated.
   4. Quality Assurance/Control Submittals:
      a. Manufacturer's Written Installation Instructions.

b. Certificate from floor covering installer that all products supplied for installation comply with local CARB regulations in the area where the project is located controlling the use of Volatile Organic Compounds (VOC's).
c. Statement of Installer's Qualifications.

5. Closeout Submittals in accordance with the following:
   a. Maintenance Data (including recommended polish and buffing procedures) in accordance with Specification Section - PROJECT CLOSEOUT.
   b. Record Doucments in accordance with Specification Section - PROJECT DOCUMENTS.
   c. Warranty in accordance with this specification and with Specification Section - WARRANTIES.

1.4 QUALITY ASSURANCE

A. Qualifications:
   1. Installer Qualifications:
      a. Engage an experienced Installer who has successfully completed three (3) projects of similar scope and size to that indicated for this Project and is competent in techniques required by the manufacturer.
   2. Manufacturer/Supplier Qualifications:
      a. Firm experienced in successfully producing/supplying products similar to that indicated for this Project, with sufficient production/supply capacity to produce/supply required units without causing delay in the work.

B. Regulatory Requirements:
   1. CARB Materials and equipment used for this Project shall comply with the current applicable regulations of the California Air Resources Board (CARB) and the Environmental Protection Agency (EPA), in the area where the project is located.
   2. CBC California Building Code (CBC 804.1)

C. Meetings:
   1. Pre-Installation: Scheduled by the Contractor prior to the start of work.
      a. Coordinate the work with other work being performed.
      b. Identify any potential problems that may impede planned progress and proper installation of work regarding quality of installation and warranty requirements.
      c. Review delivery, storage, and handling procedures.
      d. Review the article titled PROJECT CONDITIONS of this specification section.
      e. Review subfloor preparation procedures.
   2. Progress: Scheduled by the Contractor during the performance of the work.
      a. Review for proper installation of work progress.
      b. Identify any installation problems and acceptable corrective measures.
      c. Identify any measures to maintain or regain project schedule if necessary.
   3. Completion: Scheduled by the Contractor upon proper completion of the work.
      a. Inspect and identify any problems that may impede issuance of warranties or guaranties.
      b. Maintain installed work until the Notice of Substantial Completion has been executed.

1.5 DELIVERY, STORAGE, AND HANDLING

A. Packing, shipping, handling, and unloading:
   1. Products shall be handled in such a manner as to assure that they are free from dents, scratches and other damage.

B. Acceptance at Site:
   1. Products must be in manufacturer's original unopened containers with labels indicating brand name, model, and grade.
   2. Damaged products will not be accepted.

C. Storage and protection:
   1. Products shall be stored in a dry, protected, interior area above ground on level platforms, six (6) inches above ground, allowing air circulation under stacked units.
      a. Cover materials with protective waterproof covering providing for adequate air circulation and ventilation.
      b. Maintain temperature in the storage space between fifty (50) degrees Fahrenheit and ninety (90) degrees Fahrenheit.
         1) Seven (7) days prior to installation, acclimate products to environmental requirements of the article titled PROJECT CONDITIONS of this specification section, and the Paragraph titled “Environmental Requirements”.
      c. Store rolls upright.

1.6 PROJECT CONDITIONS

A. Environmental requirements:
   1. Temperature: Maintain temperature in space to receive products at sixty-eight (68) degrees Fahrenheit for two (2) days prior, during, and two (2) days following installation.
      a. After this period, maintain a temperature of not less than fifty-five (55) degrees Fahrenheit.

B. Existing Conditions:
   1. Examine site and compare it with the drawings and specifications. Thoroughly investigate and verify conditions under which the work is to be performed. No allowance will be made for extra work resulting from negligence or failure to be acquainted with all available information concerning conditions necessary to estimate the difficulty or cost of the work.
   2. Field Measurements:
      a. Take and be responsible for field measurements as required.
      b. Report any significant differences between field dimensions and drawings to the Architect.

1.7 WARRANTY

A. Contractor’s General Warranty:
   1. In accordance with Specification Section - WARRANTIES.

B. Manufacturer's Warranty:
1. In accordance with manufacturer's written standard warranty:
a. Vinyl Sheet Five (5) Years.

C. Installer's Warranty:
1. In accordance with the terms of the specification section - WARRANTIES:
a. Warranty Period Five (5) Years.

1.8 MAINTENANCE

A. Extra Materials:
1. Furnish not less than one sq.yd. of floor covering of each class, wearing surface, color, pattern and size of resilient sheet flooring installed.

PART 2 - PRODUCTS

2.1 MANUFACTURERS

A. These products listed herein establish the size, pattern, color range and function selected by the Architect for this Project. Manufacturers that are listed as acceptable alternative manufacturers and substitutions must still comply with the requirements of this project and the products listed in order to be approved as an equivalent during the Submittal Process. If the acceptable alternative manufacturers listed or substitutions are not approved during the Submittal Process due to non-compliance with the contract documents, then the Contractor shall submit product specified.
1. Vinyl Sheet manufacturer:
a. ARMSTRONG WORLD INDUSTRIES, INC.
b. Acceptable alternative manufacturers:
1) FORBO FLOORING, INC.
2) MANNINGTON COMMERCIAL.
2. Underlayment Compound manufacturer:
a. ARDEX INCORPORATED.
b. Acceptable alternative manufacturers:
1) CHEMREX.
a) A compatible bonding agent is needed for this product to adhere to the Vapor-Alkalinity Control System and be considered as equivalent.
3. Crack and Joint Filler manufacturer:
a. ARDEX INCORPORATED.

B. Products from other manufacturers not listed must submit in accordance with Specification Section - SUBSTITUTION PROCEDURES.

2.2 MATERIALS

A. General:
1. All resilient sheet flooring shall be the product of one manufacturer and shall to maximum extent possible be of a single batch number.

2. Resilient sheet flooring shall be slip resistant by achieving a minimum 0.6 or greater static coefficient of friction as recommended in Appendix A4.5 of the ADAAG by testing per ASTM D 2047 "Test method for Static Coefficient of Friction of Polish-Coated Flooring Surfaces as Measured by the James Machine".
    a. Resilient sheet flooring installed on ramps shall achieve a minimum 0.8 or greater static coefficient of friction as recommended in Appendix A4.5 of the ADAAG by testing per ASTM D 2047 "Test method for Static Coefficient of Friction of Polish-Coated Flooring Surfaces as Measured by the James Machine".
3. Colors and patterns shall be selected from manufacturer's standard line (including premium) except as noted otherwise.
4. All resilient sheet flooring shall be impervious to water damage.

B. Vinyl Sheet:
1. Shall comply with ASTM F 1363 "Standard Specification for Vinyl Sheet Floor Covering Without Backing".

2.3 ACCESSORIES

A. Underlayment Compound:
1. Provide free-flowing, self-leveling, pumpable, cement based compound (ARDEX K-15) for applications from 1 inch thick to feathered edges, 4000 psi minimum in accordance with ASTM C 109 "Test Method for Compressive Strength of Hydraulic Cement Mortars (Using 2-in. Cube Specimens)", modified for air cure only.
    a. ARDEX "K-15".

B. Crack and Joint Filler:
1. Provide low viscosity rigid polyurethane filler, tensile strength of 4,000 psi minimum, in accordance with ASTM D 638 "Test method for Tensile Properties of Plastics".
    a. ARDEX "ARDIFIX".

C. Concrete Primer (if applicable):
1. Nonstaining type as recommended in writing by flooring manufacturer.

D. Adhesives:
1. Adhesive as recommended in writing by resilient base manufacturer.
2. Compatible with Vapor-Alkalinity Control System, if installed.
3. Shall comply with CARB requirements in the place where the project is located.
4. Shall be water and mildew resistant.
5. Shall bond to non-porous substrate surfaces.

E. Polish:
1. If applicable, provide manufacturer's written recommended acrylic floor polish, compatible with resilient flooring materials.

PART 3 - EXECUTION

3.1 EXAMINATION

A. Site Verification of conditions:

1. Prior to the execution of the work under this specification section, inspect the installed work executed under other specification sections of this Project Manual which affect the execution of work under this specification section.
2. Check sub-floor variation with long straight edge.
3. Report unacceptable conditions to the Architect. Do not begin work until unacceptable conditions have been corrected.
4. Execution of work under this specification section shall constitute acceptance of existing conditions.

B. Concrete Subfloors:
1. Verify that concrete slabs comply with ASTM F 710 "Practice for Preparing Concrete Floors to Receive Resilient Flooring".
2. Verify that substrates are dry and free of curing compounds, sealers, hardeners, and other materials that may interfere with adhesive bond.
3. Verify that subfloors are free of cracks, ridges, depressions, scale, and foreign deposits.
4. Evaluate the RH (Relative Humidity) and pH (Alkalinity) for compliance with adhesives and resilient tile manufacturer's written substrate preparation recommendations.
   a. If a Vapor-Alkalinity Control System product has been installed to reduce water vapor emission or phosphates thereby negating the RH and pH Test Results, evaluate products for compatibility with adhesives and resilient base products.
5. Determine adhesion characteristics by performing bond tests recommended by the resilient base and accessory manufacturer.

3.2 PREPARATION

A. Coordination:
1. Coordinate work under this specification section with work specified under other specification sections to ensure proper and adequate interface of work.

B. Protection:
1. Protect all adjacent surfaces from drips, spray, air pollution of surrounding environment, and other damage from work.

C. Surface preparation:
1. Prepare surface in accordance with manufacturer's written instructions and recommendations.
2. Remove coatings, including curing compounds, and other substances that are incompatible with adhesives and that may contain soap, wax, oil, or silicone, without using solvents. Use mechanical methods recommended in writing by the resilient sheet manufacturer.
   a. If a Vapor-Alkalinity Control System has been installed, do not remove this system.
3. Fill all cracks, joints, etc. with a Crack and Joint Filler according to manufacturer's written instructions.
4. Install self-leveling underlayment compound at depressed or uneven floor conditions.
5. Broom and vacuum clean substrates to be covered immediately before installing resilient sheets.
6. After cleaning, examine substrates for moisture, alkaline salts, carbonation, or dust.
7. Proceed only after unsatisfactory conditions have been corrected.
8. Perform manufacturer recommended bond test to verify adhesion of resilient sheet floor covering to substrate.

9. Apply any recommended primers over the leveling compounds or treated concrete slabs prior to the installation of any resilient sheet products if recommended by the resilient sheet manufacturer.

3.3 INSTALLATION

A. General:
1. In accordance with manufacturer's written instructions and recommendations unless specifically noted otherwise.
2. In accordance with approved submittals.
3. In accordance with Regulatory Requirements.

B. Layout:
1. Lines shall be straight and true.
2. Refer to Floor Pattern Drawing(s) in the Interior Color Schedule for layout of Patterns.

C. Resilient sheet flooring installation:
1. Apply adhesive in accordance with manufacturer's current written recommendations.
   a. Do not apply adhesive too far in advance of the floor covering installation. Adhesive must be sufficiently "tacky" in accordance with adhesive manufacturer's written recommendations for the proper installation of the floor covering.
   b. Adhesive shall be applied around perimeter, at seams, and around all fixtures to provide a homogenous surface.
2. Maintain uniformity of resilient sheet direction.
3. Arrange for a minimum number of seams and place them in inconspicuous and low traffic areas, but in no case less than 6 inches away from parallel joints in flooring substrates.
4. Match edges of resilient floor coverings for color shading and pattern at seams.
5. Avoid cross seams.
6. Scribe, cut and fit resilient sheet flooring to butt tightly to vertical surfaces, permanent fixtures, and built-in furniture, including cabinets, pipes, outlets, edgings, thresholds and nosing’s.
7. Extend resilient sheet flooring into toe spaces, door reveals, closets and similar openings.
8. Hand roll resilient sheet floor covering in both directions from center out to embed in adhesive and eliminate trapped air.
   a. At wall, door casings, and other locations where access by roller is impractical, press floor coverings firmly in place with flat-bladed instrument that will not harm the flooring.
9. Prepare seams to produce tightly fitted seams without gaps or overlaps.
   a. Heat weld seams
10. Installation shall be true, level, and even with tight joints.
11. Maintain reference markers, holes or openings that are in place or plainly marked for future cutting by repeating on finish flooring as marked on subfloor. Use chalk or other nonpermanent marking device.

D. Base:
1. Shall be integrally coved 6 inches high (unless otherwise indicated), and capped with continuous metal edge strip.

3.4 CLEANING

A. Cleaning:
1. Clean in accordance with Specification Section - PROJECT CLOSEOUT.
2. Clean any soiled surfaces immediately.
3. Clean any soiled surfaces at the end of each day, minimum.
4. Finish shall be clean and ready for the application of any additional finishes.
5. In accordance with manufacturer's written instructions and recommendations.

B. Polishing (if applicable):
1. Prior to final acceptance for occupancy, all resilient sheet flooring surfaces shall be polished and buffed with a minimum of three coats without diminishing any polish's slip resistance characteristics in accordance with approved manufacturer’s written recommendations.

3.5 DEMONSTRATION

A. In accordance with Specification Section - PROJECT CLOSEOUT.
1. Provide the services of a manufacturer-authorized service representative to demonstrate and train Owner’s maintenance personnel as specified below.
   a. Train Owner’s maintenance personnel on cleaning procedures and schedules related to cleaning and preventative maintenance,
   b. Schedule training with the Owner’s maintenance personnel with at least seven (7) days advance notice.

3.6 PROTECTION

A. Protection from traffic:
1. Provide final protection and maintain conditions, in a manner acceptable to manufacturer and installer, which ensures the work of this section being without damage or deterioration until the time of Substantial Completion.

3.7 SCHEDULES

A. Vinyl Sheet (Heterogeneous) **RS-1**.
1. Manufacturer ARMSTRONG WORLD INDUSTRIES.
2. Product name DECOR ART CORLON.
3. Physical Characteristics:
   a. Wearing Surface Smooth.
   b. Overall Thickness 0.080 inch.
   c. Sheet Width 6 feet.
   d. Static Load Limit per modified ASTM F 970 “Test method for Static Load Limit”:
      1) 500 psi.
4. Performance Characteristics:
   a. Critical Radiant Flux per ASTM E 648 “Test Method for Critical Radiant Flux of Floor-Covering Systems Using a Radiant Heat Energy Source”:
      1) Class 1, not less than 0.45 W/sq.cm.

b. Smoke Density per ASTM E 662 “Test method for Specific Optical Density of Smoke Generated by Solid Materials”:
   1) Less than 450.

END OF SECTION

INTENTIONALLY LEFT BLANK

SECTION 096723 – RESINOUS FLOORING

PART 1 - GENERAL

1.1 SUMMARY

A. This Section includes the following:
   1. Provide all material, labor, equipment and services necessary to completely install all materials, accessories and other related items necessary to complete the Project as indicated by the Contract Documents.

B. Related Sections: The following Project Manual Sections contain requirements that relate to this section:
   1. ALL DIVISION 00 SPECIFICATION SECTIONS.
   2. ALL DIVISION 01 SPECIFICATION SECTIONS.
   3. 03 30 00 CAST-IN-PLACE CONCRETE
   4. 05 12 00 STEEL AND FABRICATIONS
   5. 07 18 50 VAPOR-ALKALINITY CONTROL
   6. 09 29 00 GYPSUM BOARD
   7. 09 91 00 PAINTING
   8. ALL SPECIFICATION SECTIONS IN THE FACILITY SERVICES SUBGROUP.

1.2 REFERENCES

A. Standards:
   1. In accordance with the following standards:
      a. ISO International Organization for Standardization

1.3 SUBMITTALS

A. Submit in accordance with Specification Section - SUBMITTAL PROCEDURES:
   1. Product Data.
      a. Submit technical data, installation instructions, and general recommendations for each resinous flooring material required.
      b. Submit manufacturer's full color range (including any standard, premium and custom colors) for selection by the Architect.
         1) For initial selection of colors and finishes for consideration, submit manufacturer's color charts showing full range of colors and finishes available.
   2. Samples.
      a. Provide 4 inch square sample of each type, color and pattern selected, applied to a rigid backing, in color and finish as selected.
   3. Quality Assurance/Control Submittals:
      a. Manufacturer / Supplier Qualifications.
      b. Installer Qualifications and Certifications.
      c. Certificates:
         1) Submit three (3) copies of certificates.

2) Include ISO 9002 certification indicating that all materials, including primers, resins, curing agents, finish coats, aggregates and sealants are manufactured and tested as a registered quality system.

d. Manufacturer's written Instructions:

1) Submit three (3) copies of manufacturer's written instructions.

4. Closeout Submittals in accordance with the following:

a. Maintenance Data in accordance with Specification Section - PROJECT CLOSEOUT.

b. Warranty in accordance with Specification Section - WARRANTIES.

1.4 QUALITY ASSURANCE

A. Qualifications:

1. Manufacturer/Supplier Qualifications:

a. Single Source Responsibility: Obtain primary resinous flooring materials including vapor barrier, primers, resins, hardening agents, finish or sealing coats from a single source manufacturer with not less than ten (10) years of successful experience in manufacturing and installing principal materials described within this section.

b. Provide secondary materials only of type and from source recommended in writing by manufacturer of primary materials.

c. Firm experienced in successfully producing/supplying products similar to that indicated for this Project, with sufficient production/supply capacity to produce/supply required units without causing delay in the work.

2. Installer Qualifications:

a. Engage an experienced Installer who has successfully completed three (3) projects of similar scope and size to that indicated for this Project.

b. Engage an experienced Installer who is certified in writing by the manufacturer listed herein as qualified to install manufacturer's product (or system) in accordance with manufacturer's warranty requirements.

B. Regulatory Requirements:

1. In accordance with Specification Section - REGULATORY REQUIREMENTS, and the following:

a. CARB Materials and equipment used for this Project shall comply with the current applicable regulations of the California Air Resources Board (CARB) and the Environmental Protection Agency (EPA), in the area where the project is located.

b. CBC California Building Code (CBC 804.1 and CBC 11B-302.1)

C. Meetings:

1. Pre-Installation: Scheduled by the Contractor prior to the start of work.

2. Progress: Scheduled by the Contractor during the performance of the work.

a. Review for proper installation of work progress.

b. Identify any installation problems and acceptable corrective measures.

c. Identify any measures to maintain or regain project schedule if necessary.

3. Completion: Scheduled by the Contractor upon proper completion of the work.

a. Inspect and identify any problems that may impede issuance of warranties or guaranties.

b. Maintain installed work until the Notice of Substantial Completion has been executed.

1.5 DELIVERY, STORAGE, AND HANDLING

A. Packing, shipping, handling, and unloading:
   1. Products shall be factory pre-weighed and pre-packaged in single, easy to manage batches to eliminate on site mixing errors. No on-site weighing or volumetric measurements will be allowed.
   2. Products shall be handled in such a manner as to assure that they are free from dents, scratches and other damage.

B. Acceptance at Site:
   1. Products must be in manufacturer's original unopened containers with labels indicating brand name, model, and grade.
   2. Damaged products will not be accepted.

C. Storage and protection:
   1. Products shall be stored above ground on level platforms, six (6) inches above ground, allowing air circulation under stacked units.
      a. Cover materials with protective waterproof covering providing for adequate air circulation and ventilation.
   2. Temperature of storage area shall be maintained between 60 and 85 degrees F.

1.6 PROJECT CONDITIONS

A. Environmental requirements:
   1. Temperature: Maintain ambient temperature in space to receive products between sixty (60) degrees Fahrenheit and eighty-five (85) degrees Fahrenheit for seven (7) days prior, during, and seven (7) days minimum following installation. Inform the Owner of ambient temperature requirements for products installed and maintain until Substantial Completion and turn-over of the building or facility to the Owner.

B. Existing Conditions:
   1. Examine site and compare it with the drawings and specifications. Thoroughly investigate and verify conditions under which the work is to be performed. No allowance will be made for extra work resulting from negligence or failure to be acquainted with all available information concerning conditions necessary to estimate the difficulty or cost of the work.
   2. Concrete substrate shall be properly cured for a minimum of 30 days.
   3. RH (Relative Humidity) and Alkalinity Test:
      a. Shall control vapor transmission up to and including 100 percent readings per RH Testing of ASTM F 2170 "Determining Relative Humidity in Concrete Floor Slabs Using in situ Probes".
      b. Shall control alkalinity for a long term maximum resistance of pH 14 per pH Testing of ASTM F 710 "Preparing Concrete Floors to Receive Resilient Flooring"
   4. Job area to be free of other trades during floor installation.

1.7 WARRANTY

A. Contractor's General Warranty:

1. In accordance with Specification Section - WARRANTIES.

B. Manufacturer’s Warranty:
   1. In accordance with manufacturer's written standard warranty:
      a. Warranty Period One (1) Year.

C. Installer's Warranty:
   1. In accordance with the terms of the Specification Section - WARRANTIES:
      a. Warranty period [One (1) Year.][Five (5) years.]

PART 2 - PRODUCTS

2.1 MANUFACTURERS

A. These products listed herein establish the size, pattern, color range and function selected by the Architect for this Project. Manufacturers that are listed as acceptable alternative manufacturers and substitutions must still comply with the requirements of this project and the products listed in order to be approved as an equivalent during the Submittal Process. If the acceptable alternative manufacturers listed or substitutions are not approved during the Submittal Process due to non-compliance with the contract documents, then the Contractor shall submit product specified.
   1. Specified Membrane (Moisture Control System) product manufacturers:
      a. STONHARD, INC. "STONFIL OP2".
      b. Acceptable alternative manufacturers:
         1) GENERAL POLYMERS "AQUAMROR".
   2. Specified Resinous Flooring Type 1 product manufacturers:
      a. STONHARD, INC. "STONSHIELD HRI".
      b. Acceptable alternative manufacturers:
         1) GENERAL POLYMERS "TPM-115 U1.
   3. Specified Resinous Flooring Type 2 product manufacturers:
      a. STONHARD, INC. "STONSHIELD UTS".
      b. Acceptable alternative manufacturers:
         1) GENERAL POLYMERS "FASTOP S".

B. Products from other manufacturers not listed must submit in accordance with Specification Section - SUBSTITUTION PROCEDURES.

2.2 MATERIALS

A. Membrane (Moisture Control System) - STONFIL OP2:
   1. Three-component, polymer modified, cementitious, osmotic pressure resistant grout, used in conjunction with all STONHARD Flooring Systems designed to eliminate osmotic blistering of flooring systems caused by excess moisture occurring in slabs on grade.
   2. Physical Properties: Provide osmotic pressure resistant grout system in which physical properties of grout system, when tested in accordance with standards or procedures referenced below, are as follows:
      a. Thickness: 3/32" – 1/8".
      b. Compressive Strength (at 24 hours): 3,000 psi.

1) Per ASTM C 579 “Test methods for Compressive Strength of Chemical Resistant Mortars, Grouts, Monolithic Surfacings, and Polymer Concretes”

c. Compressive Strength (at 7 days): 7,000 psi.
   1) Per ASTM C 579 “Test methods for Compressive Strength of Chemical Resistant Mortars, Grouts, Monolithic Surfacings, and Polymer Concretes”

d. Bond Strength (scored, 100 percent concrete failure): .400 psi.
   1) Per ASTM D 4541 "Test method for Pull-Off Strength of Coatings Using Portable Adhesion Testers".

B. Resinous Flooring Type 1 - STONSHIELD HRI (RF-1):

1. A nominal 3/16" thick system comprised of a penetrating two-component epoxy primer, three-component, epoxy undercoat, one coat of brightly colored, medium quartz silica aggregate broadcast and one (1) coat of high performance, two-component, clear epoxy sealer.

2. Physical Properties: Provide flooring system in which physical properties of topping including aggregate, when tested in accordance with standards or procedures referenced below, are as follows:

a. Compressive Strength (after 7 days): 10,000 psi.
   1) Per ASTM C 579 “Test methods for Compressive Strength of Chemical Resistant Mortars, Grouts, Monolithic Surfacings, and Polymer Concretes”.

b. Tensile Strength: 2,000 psi.
   1) Per ASTM C 307 “Test Method for Tensile Strength of Chemical-Resistant Mortars, Grouts, and Monolithic Surfacings”.

c. Flexural Strength: 4,300 psi.
   1) Per ASTM C 580 “Test Method for Flexural Strength and Modulus of Elasticity of Chemical-Resistant Mortars, Grouts, Monolithic Surfacings, and Polymer Concretes”.

d. Flexural Modulus of Elasticity: 2.0 x 106 psi.
   1) Per ASTM C 580 “Test Method for Flexural Strength and Modulus of Elasticity of Chemical-Resistant Mortars, Grouts, Monolithic Surfacings, and Polymer Concretes”.

e. HardnessShore D Durometer): 85-90.
   1) Per ASTM D 2240 “Standard Test Method for Rubber Property – Durometer Hardness”.

f. Bond Strength 100 percent concrete failure): 400 psi.
   1) Per ASTM D 4541 “Standard Test Method for Pull-Off Strength of Coatings Using Portable Adhesion Testers”.

g. Impact Resistant: 160 in.lbs.
   1) Per ASTM D 4226 “Test Methods for Impact Resistant of Rigid Poly Vinyl Chloride (PVC) Building Products”.

h. Abrasion Resistance (CS-17 wheel): 0.06 gm max weight loss.
   1) Per ASTM D 4060 “Test Method for Abrasion Resistance of Organic Coatings by the Taber Abraser”.

i. Coefficient of Friction per ASTM D 2047 “Test method for Static Coefficient of Friction of Polish-Coated Flooring Surfaces as Measured by the James Machine”:
   1) Standard Texture: 0.8.
   2) Medium Texture: 0.7.

j. Flammability (extent of burning 0.25 inches max): Self Extinguishing.
   1) Per ASTM D 635 “Test Method for Rate of Burning and/or Extent and Time of Burning of Plastics in a Horizontal Position”.

k. Thermal Coefficient of Linear Expansion: 1.8 x 10-5 in/inoC.

1) Per ASTM C 531 “Test Method for Linear Shrinkage and Coefficient of Thermal Expansion of Chemical-Resistant Mortars, Grouts, Monolithic Surfacings and Polymer Concretes”.

l. Water Absorption: 0.1 percent.
   1) Per ASTM C 413 “Test Method for Absorption of Chemical-Resistant Mortars, Grouts, Monolithic Surfacings, and Polymer Concretes”.

m. Heat Resistant Limitation:
   1) For continuous exposure: 140 deg. F.
   2) For intermittent spills: 200 deg. F.

n. Cure Rate Allowance (at 77 deg. F, 24 hours for normal operations): 12 hours for foot traffic.

C. Resinous Flooring Type 2 - STONSHIELD UTS (RF-2) for extreme temperature fluctuations (at freezer / cooler, and oven areas):

1. A nominal 1/4" thick system comprised of a high performance, four-component mortar consisting of urethane resin, curing agent, selected, medium graded aggregates and inorganic pigments sealed with a two-component, 100 percent solids, urethane coating.
2. Physical Properties: Provide flooring system in which physical properties of topping including aggregate, when tested in accordance with standards or procedures referenced below, are as follows:

a. Compressive Strength (after 7 days): 7,700 psi.
   1) Per ASTM C 579 “Test methods for Compressive Strength of Chemical Resistant Mortars, Grouts, Monolithic Surfacings, and Polymer Concretes”.

b. Tensile Strength: 1,000 psi.
   1) Per ASTM C 307 “Test Method for Tensile Strength of Chemical-Resistant Mortars, Grouts, and Monolithic Surfacings”.

c. Flexural Strength: 2,400 psi.
   1) Per ASTM C 580 “Test Method for Flexural Strength and Modulus of Elasticity of Chemical-Resistant Mortars, Grouts, Monolithic Surfacings, and Polymer Concretes”.

d. Flexural Modulus of Elasticity: 2.6 x 106 psi.
   1) Per ASTM C 580 “Test Method for Flexural Strength and Modulus of Elasticity of Chemical-Resistant Mortars, Grouts, Monolithic Surfacings, and Polymer Concretes”.

e. Hardness (Shore D Durometer): 80-84.
   1) Per ASTM D 2240 “Standard Test Method for Rubber Property – Durometer Hardness”.

f. Bond Strength (100 percent concrete failure): .400 psi.
   1) Per ASTM D 4541 “Standard Test Method for Pull-Off Strength of Coatings Using Portable Adhesion Testers”.

g. Impact Resistant: .160 in.lbs.
   1) Per ASTM D 4226 “Test Methods for Impact Resistant of Rigid Poly Vinyl Chloride (PVC) Building Products”.

h. Abrasion Resistance (CS-17 wheel): 0.05 gm max weight loss.
   1) Per ASTM D 4060 “Test Method for Abrasion Resistance of Organic Coatings by the Taber Abraser”.

i. Coefficient of Friction: Dependent on texture selection.
   1) Per ASTM D 2047 “Test method for Static Coefficient of Friction of Polish-Coated Flooring Surfaces as Measured by the James Machine”.

j. Flammability (extent of burning 0.25 inches max): Self Extinguishing.

1) Per ASTM D 635 “Test Method for Rate of Burning and/or Extent and Time of Burning of Plastics in a Horizontal Position”.

k. Thermal Coefficient of Linear Expansion: 1.1 x 10-5 in/inoC.
   1) Per ASTM C 531 “Test Method for Linear Shrinkage and Coefficient of Thermal Expansion of Chemical-Resistant Mortars, Grouts, Monolithic Surfacings and Polymer Concretes”.

l. Water Absorption: 0.056 percent.
   1) Per ASTM C 413 “Test Method for Absorption of Chemical-Resistant Mortars, Grouts, Monolithic Surfacings, and Polymer Concretes”.

m. Heat Resistant Limitation:
   1) For continuous exposure: 200 deg. F.
   2) For intermittent spills: 250 deg. F.

n. Cure Rate Allowance (at 77 deg. F, 24 hours for normal operations): 6 hours for foot traffic.

2.3 ACCESSORIES

A. Joint Sealant Materials:
   1. Manufacturer's compatible joint sealant materials in compliance with standards specified within Specification Section – SEALANTS.
      a. STONHARD, INC. STONFLEX MP7.
      b. Acceptable alternative manufacturers:
         1) GENERAL POLYMERS: As recommended in writing by manufacturer, compatible with floor product.

B. Metal Trim:
   1. Manufacturer's standard metal trim (cove strip), for terminating cove base.
   2. Acceptable alternative manufacturers:
      a. General Polymers: As recommended in writing by manufacturer, compatible with floor product.

2.4 FINISHES

A. Color as selected by the Architect from manufacturer's standard colors.

B. Textures: Provide appropriate texture as recommended in writing by the manufacturer.
   1. T-1: Texture that is appropriate for Restroom applications, unless otherwise noted.
   2. T-2: Texture that is appropriate for Kitchen applications, unless otherwise noted.
   3. T-3: Texture that is appropriate for Shower applications, unless otherwise noted.

PART 3 - EXECUTION

3.1 EXAMINATION

A. Site verification of conditions:
   1. Prior to the execution of the work under this specification section, inspect the installed work executed under other sections of this Project Manual which, affect the execution of work under this specification section.

2. Report unacceptable conditions to the Architect. Do not begin work until unacceptable conditions have been corrected.
3. Execution of work under this specification section shall constitute acceptance of existing conditions.

3.2 PREPARATION

A. Coordination:
1. Coordinate work under this specification section with work specified under other sections to ensure proper and adequate interface of work.

B. Protection:
1. Protect all adjacent surfaces from drips, spray, air pollution of the surrounding environment, and other damage from work under this specification section.

C. Surface preparation:
1. Prepare surface in accordance with manufacturer's written instructions and recommendations.
2. Concrete subfloor shall be dry in accordance with RH and Alkalinity tests , as tested in accordance with Specification Section – VAPOR-ALKALINITY CONTROL.
3. Chipping around existing floor drains & floor sinks shall be in accordance with coating manufacturer's written recommendations for proper interface of resinous flooring so there is no standing water around drains after the resinous flooring system is applied.
4. Clean substrates of substances (oil, grease, rolling compounds, incompatible primers, loose mill scale, etc.) which could impair bond of materials specified within this section.
   a. Follow manufacturer's written recommendations using mechanical means (such as use of a scabbler, scarifier or shot blast machine) for removal of bond inhibiting materials such as curing compounds or laitance.
5. Remove any surface irregularities by lightly abrading and vacuuming the floor surface.
6. Control Joints:
   a. After floor is blasted/prepared, pre-fill the joints with STONSET PM5 (or GENERAL POLYMERS equivalent) epoxy patching mortar.
7. Expansion Joints:
   a. Mark expansion joint widths on walls where proposed base would cover the marks so that one can find them again after the floor is applied.

3.3 APPLICATION

A. General:
1. In accordance with manufacturer's written instructions and recommendations unless specifically noted otherwise.
2. In accordance with approved submittals.
3. In accordance with Regulatory Requirements.
4. Set plumb, level, and square.

B. Layout:
1. Lines shall be straight and true.

C. Application:
1. Apply osmotic resistant grout to all slabs.

a. Troweled Mortar: Mix mortar material according to manufacturer's written recommended procedures.
   1) Primer: Mix and apply primer over properly prepared substrate with strict adherence to manufacturer's installation procedures and coverage rates.
      a) Coordinate timing of primer application with application of troweled mortar to ensure optimum adhesion between resinous flooring materials and substrate
   2) Apply immediately after mixing.
   3) Pour a bead of material and rake out with a 1/2" x 1/2" V-notched rake.
   4) Apply the material at a thickness of 1/8".
   5) Roll the material with a spiked roller to release any entrained air and produce a smooth finish layer.
   6) Keep a wet edge so that each subsequent mix may be knit into the previous mix within a 20 minute period.
   7) Allow to cure for 24 hours in accordance with manufacturer's written recommendations.
   8) Prepare the membrane surface after curing by shot blasting to ensure proper adhesion. Edges and confined spaces must be ground with a diamond cup-stone. Once prepared, treat the membrane like a concrete surface.

2. Apply cove base and terminate to cove strip at +5" above finished floor for both coating types.

D. Resinous Flooring Type 1 application:
1. Primer: Mix and apply primer over properly prepared substrate with strict adherence to manufacturer's installation procedures and coverage rates.
   a. Coordinate timing of primer application with application of Resinous Flooring Type 1 to ensure optimum adhesion between resinous flooring materials and substrate.
2. Mix Resinous Flooring Type 1 and then screed apply and trowel to a tightly closed finish.
3. Allow for at least an 8 hour cure.
4. Next, lightly grind the mortar Base.
5. Mix and apply the undercoat to the floor surface using a steel squeegee, followed by rolling with a looped roller.
6. Immediately broadcast aggregate using manufacturer's written recommended equipment and techniques into the freshly applied undercoat.
7. Allow at least 8 hours (or longer depending on manufacturers recommendations) to cure between coats.
8. Scrape and sweep the floor to remove all loose aggregate particles, then vacuum.
9. Mix and apply sealer with strict adherence to manufacturer's installation procedures, and the texture type selected by the Architect.
10. Allow the sealer to cure in accordance with the manufacturer's written recommendations.

E. Resinous Flooring Type 2 application:
1. Follow the detailed manufacturer's printed instructions mixing and applying Resinous Flooring Type 2.
2. Material shall be used immediately after mixing.
3. A "Screed Applicator" shall be used to distribute the mixed Resinous Flooring Type 2 onto the floor.
4. Notched finishing trowels and spiked rollers as recommended in writing by the manufacturer shall be used to smooth the surface of the material to the required thickness.
5. Texture aggregate shall then be broadcast into the wet mortar, in texture finish as selected by the Architect.

6. Allow to cure 6 – 8 hours and apply sealer coat.

F. Expansion Joints:
1. Once the floor has been applied and has cured, find the Expansion Joint marks on the wall and saw cut to the width of the joint and fill with STONFLEX PM7 (or GENERAL POLYMERS equivalent).

3.4 FIELD QUALITY CONTROL

A. Site Tests:
1. As required by Regulatory Requirements.
2. RH and Alkalinity Tests – see Specification Section – VAPOR-ALKALINITY CONTROL.
3. The right is reserved to invoke the following material testing procedure at any time, and any number of times during the period of flooring installation:
   a. The Owner will engage the service of an independent testing laboratory to sample materials being used on the job site. Samples of material will be taken, identified and sealed, and certified in the presence of the Contractor.
      1) Testing laboratory will perform tests for any of the characteristics specified, using applicable testing procedures referenced herein, or if none referenced, in manufacturer's product data.
      2) If test results show materials being used do not comply with specified requirements, the Contractor may be directed by the Owner to stop work; remove non-complying materials; pay for re-testing; re-apply flooring materials to properly prepared surfaces which had previously been coated with unacceptable materials until the work is right.
4. Floor Thickness Verification:
   a. At the owner's discretion and under his supervision, the contractor shall take plus or minus 1" random cores per 1,000 sq. ft. through the system into the substrate to verify proper system thickness. Cored areas less than specified thickness shall be removed and replaced or increased in thickness by the installing contractor, in a manner that does not affect the performance or integrity of the system. Cored areas which comply with the written recommended system thickness shall be built up to match the surrounding surface elevation prior to applying the seal coat(s). Cores taken and patched will be noticeable, therefore, cores should be taken from areas where aesthetics are less critical

B. Inspection:
1. As required by Regulatory Requirements.
2. Schedule inspections and notify the Architect, Project Inspector and any other regulatory agencies of the time at least 48 hours prior to the inspection.
3. No work shall be without the inspections required by Regulatory Requirements.

3.5 CLEANING

A. Clean in accordance with Specification Section - PROJECT CLOSEOUT.
1. Clean any soiled surfaces immediately using cleaning materials and procedures recommended in writing by resinous flooring manufacturer.
2. DO NOT clean the epoxy floors for a period of seven (7) days after installation in order to allow proper curing of the epoxy floor systems for full resistance to chemicals.

3.6 PROTECTION

A. Protection from traffic:
   1. Job area to be free of other trades for a period of twenty-four (24) hours after floor installation.
   2. Protect resinous flooring materials from damage and wear during construction operation. Where temporary covering is required for this purpose, comply with manufacturer's written recommendations for protective materials and method of application.
   3. Provide final protection and maintain conditions, in a manner acceptable to manufacturer and installer, which ensures the work of this section being without damage or deterioration until the time of Substantial Completion.

END OF SECTION

INTENTIONALLY LEFT BLANK

SECTION 096840 - CARPET

PART 1 - GENERAL

1.1 SUMMARY

A. This Section includes the following:
   1. Provide all material, labor, equipment and services necessary to completely install all carpet materials, accessories and other related items necessary to complete the Project as indicated by the Contract Documents.

B. Related Sections: The following Project Manual Sections contain requirements that relate to this section:
   1. ALL DIVISION 00 SPECIFICATION SECTIONS.
   2. ALL DIVISION 01 SPECIFICATION SECTIONS.
   3. 03 30 00 CAST-IN-PLACE CONCRETE
   4. 03 35 10 POLISHED CONCRETE FINISHING
   5. 06 10 00 ROUGH CARPENTRY
   6. 06 41 23 MODULAR CASEWORK
   7. 07 26 13 VAPOR-ALKALINITY CONTROL
   8. 08 11 00 METAL DOORS AND FRAMES
   9. 09 29 00 GYPSUM BOARD
   10. 09 30 00 TILE
   11. 09 65 10 RESILIENT BASE AND ACCESSORIES
   12. 09 65 16 RESILIENT SHEET
   13. 09 72 00 WALL COVERINGS
   14. 09 91 00 PAINTING
   15. ALL SPECIFICATION SECTIONS IN THE FACILITY SERVICES SUBGROUP.

1.2 REFERENCES

A. Standards:
   1. In accordance with the following standards:
      a. AATCC American Association of Textile Colorists and Chemists.
      b. ASTM American Society of Testing Materials.
      c. CRI Carpet and Rug Institute Recommendations and Standards.

1.3 SUBMITTALS

A. Submit in accordance with Specification Section - SUBMITTAL PROCEDURES:
   1. Product Data.
      a. For each type of carpet indicated:
      b. Manufacturer's full color range (including any standard and premium colors).
      c. Design data for all adhesives, tape, etc. for all carpet accessories.
   2. Shop Drawings.
      a. Seaming diagrams.
         1) Changes at carpet types, patterns, colors, and field seams shall be identified.

3. Samples.
   a. Provide 18" x 18" sample of each color and pattern selected.
4. Quality Assurance/Control Submittals:
   a. Manufacturer's Written Installation Instructions.
   b. Certificates:
      1) Certificates from the manufacturer that the installation was in compliance with manufacturer's written instructions.
   c. Statement of Installer's Qualifications.
5. Closeout Submittals in accordance with the following:
   a. Maintenance Data (indicating all recommended cleaning and maintenance instructions) in accordance with Specification Section - PROJECT CLOSEOUT.
   b. Project Record Documents in accordance with Specification Section - PROJECT RECORD DOCUMENTS.
   c. Warranty in accordance with this specification and Specification Section - WARRANTIES.

1.4 QUALITY ASSURANCE

A. Qualifications:
   1. Installer Qualifications:
      a. Engage an experienced Installer who has successfully completed three (3) projects of similar scope and size to that indicated for this Project.

B. Regulatory Requirements:
   1. In accordance with Specification Section - REGULATORY REQUIREMENTS, and the following:
      a. CARB Materials and equipment used for this Project shall comply with the current applicable regulations of the California Air Resources Board (CARB) and the Environmental Protection Agency (EPA), in the area where the project is located.
      b. CBC California Building Code (CBC 804.1)
      c. NFPA National Fire Protection Agency

C. Meetings:
   1. Pre-Installation: Scheduled by the Contractor prior to the start of work.
      a. Coordinate the work with all other related work.
      b. Identify any potential problems that may impede planned progress and proper installation of work regarding quality of installation and warranty requirements.
      c. Review delivery, storage and handling procedures.
      d. Review project conditions.
      e. Review subfloor preparation procedures.
   2. Progress: Scheduled by the Contractor during the performance of the work.
      a. Review for proper installation of work progress.
      b. Identify any installation problems and acceptable corrective measures.
      c. Identify any measures to maintain or regain project schedule if necessary.
   3. Completion: Scheduled by the Contractor upon proper completion of the work.
      a. Inspect and identify any problems that may impede issuance of warranties or guaranties.
      b. Maintain installed work until the Notice of Substantial Completion has been executed.

1.5 DELIVERY, STORAGE, AND HANDLING

A. Packing, shipping, handling, and unloading:
   1. Products shall be individually wrapped in the original protective wrapping with legible registration labels indicating manufacturer's name, style, color and dye lot.

B. Storage and protection:
   1. Products shall be stored in a dry, protected interior area.
      a. Carpet shall be stored flat and shall not have anything stacked on top.
      b. Maintain temperature in the storage space between fifty (50) degrees Fahrenheit and ninety (90) degrees Fahrenheit.
         1) Seven (7) days prior to installation, acclimate products to environmental requirements of the article titled PROJECT CONDITIONS of this specification section, and the Paragraph titled “Environmental Requirements”.

1.6 PROJECT CONDITIONS

A. Environmental requirements:
   1. Temperature: Maintain ambient temperature in space to receive products between sixty-eight (68) degrees Fahrenheit and eighty (80) degrees Fahrenheit for seven (7) days prior, during, and seven (7) days minimum following installation.
      a. Inform the Owner of ambient temperature requirements for products installed and maintain until Substantial Completion and turn-over of the building or facility to the Owner.
   2. Humidity: Maintain humidity in space to receive products between 6 percent to 9 percent for four (4) days minimum prior, during, and following installation in accordance with manufacturer's written recommendations.
      a. Inform the Owner of humidity requirements for products installed and maintain until Substantial Completion and turn-over of the building or facility to the Owner.

B. Existing Conditions:
   1. Examine site and compare it with the drawings and specifications. Thoroughly investigate and verify conditions under which the work is to be performed. No allowance will be made for extra work resulting from negligence or failure to be acquainted with all available information concerning conditions necessary to estimate the difficulty or cost of the work.
   2. Space shall be dry.
      a. Concrete slab shall be a minimum of 4 months old.
   3. Field Measurements:
      a. Take and be responsible for field measurements as required.
      b. Report any significant differences between field dimensions and drawings to Architect.

1.7 WARRANTY

A. Contractor's General Warranty:
   1. In accordance with Specification Section - WARRANTIES.

B. Manufacturer's Warranty:
   1. In accordance with manufacturer's written standard warranty:
      a. Broadloom Life of the Carpet.
      b. Walk-Off Fifteen (15) Years.
   2. Shall cover Wear, Anti-shock, Edge Ravel, Tuft Bind, Dimensional Stability, Zippering, Static Protection, and Backing Delamination.

C. Installer's Warranty:
   1. In accordance with the terms of the specification section - WARRANTIES:
      a. Warranty Period Two (2) Years.
      b. Shall be co-endorsed by the General Contractor.

1.8 OWNER'S INSTRUCTIONS

A. Provide the services of a manufacturer's-authorized service representative to demonstrate and train the Owner's maintenance personnel prior to substantial completion as specified below:
   1. Proper maintenance and cleaning procedures in accordance with manufacturer's written recommended instructions.

1.9 MAINTENANCE

A. Extra Materials:
   1. Broadloom:
      a. Provide two percent (2 percent) of each color and all salvage pieces over 1 square yard in accordance with Specification Section - PROJECT CLOSEOUT.
   2. Walk-Off:
      a. Provide five percent (5 percent) of each color, in accordance with Specification Section - PROJECT CLOSEOUT.

PART 2 - PRODUCTS

2.1 MANUFACTURERS

A. Products specified are from companies listed below, or approved equivalent. These products listed herein establish the size, pattern, color range and function selected by the Architect for this Project. Manufacturers listed as acceptable alternative manufacturers must still comply with the requirements of the products listed in order to be approved as an equivalent during the Submittal Process. If the acceptable alternative manufacturers listed are not approved during the Submittal Process due to non-compliance with the written documents, then the Contractor shall submit product specified.
   1. Specified broadloom carpet product manufacturer:
      a. TANDUS CENTIVA (FUSD DISTRICT STANDARD).
   2. Specified walk-off manufacturer:
      a. TANDUS
   3. Specified underlayment compound manufacturer:
      a. ARDEX INCORPORATED
      b. Acceptable alternative manufacturer: CHEMREX

1) A compatible bonding agent is needed for this product to adhere to the Vapor-Alkalinity Control System and be considered as equivalent.

4. Specified crack and joint filler manufacturer:
   a. ARDEX INCORPORATED.

B. Products from other manufacturers not listed must submit in accordance with Specification Section - SUBSTITUTION PROCEDURES.

2.2 MATERIALS

A. General:
1. All materials shall be newly manufactured and of a quality consistent with industry standards and this specification.
2. Colors and patterns shall be selected from manufacturer's standard line (including premium) except as otherwise specified. See Carpet Schedule at the end of this section for carpet types required.
3. Carpet shall have integral static protection.
4. Carpet shall be impervious to water damage.
5. The stain resistant properties must be permanent and cannot be removed by commercial cleanings or abrasive wear. Test data as follows:
   a. Red Dye 40 must be released by water only, after exposure to 150,000+ cycles in a tetra pod walker and after sample is allowed to soak in 10:1 solution of water and ammonia.
6. Topical stain resistant treatments will not be acceptable. Stain resistant properties must be inherent.
7. Carpet must meet or exceed qualifications for environmental standards of the Carpet and Rug Institute's Green Label Program.

2.3 ACCESSORIES

A. Underlayment Compound:
1. Provide free-flowing, self-leveling, pumpable, cement based compound (ARDEX K-15) for applications from 1 inch thick to feathered edges, 4,000 psi minimum in accordance with ASTM C 109 "Test Method for Compressive Strength of Hydraulic Cement Mortars (Using 2-in. Cube Specimens)", modified for air cure only.
   a. ARDEX "K-15".

B. Crack and Joint Filler:
1. Provide low viscosity rigid polyurethane filler, tensile strength of 4,000 psi minimum, in accordance with ASTM D 638 "Test method for Tensile Properties of Plastics".
   a. ARDEX "ARDIFIX".

C. Concrete Primer (if applicable):
1. Nonstaining type as recommended in writing by flooring manufacturer.

D. Adhesives:
1. Adhesive as recommended in writing by carpet manufacturer.
2. Compatible with VAPOR-ALKALINITY CONTROL SYSTEM, if installed.
3. Shall comply with CARB requirements in the place where the project is located.
4. Shall be non-staining and water and mildew resistant.

5. Complies with flammability requirements for installed carpet.
6. Shall bond to non-porous substrate surfaces.

E. Seaming Cement:
1. Hot-melt adhesive tape or similar product
2. Complying with CARB requirements in the place where the project is located.
3. Recommended in writing by carpet manufacturer for taping seams and butting cut edges at backing to form secure seams and to prevent pile loss at seams.

PART 3 - EXECUTION

3.1 EXAMINATION

A. Site verification of conditions:
1. Prior to the execution of the work under this specification section, inspect the installed work executed under other sections of this Project Manual, which affect the execution of work under this specification section.
2. Check sub-floor variation with long straight edge.
3. Report unacceptable conditions to the Architect. Do not begin work until unacceptable conditions have been corrected.
4. Execution of work under this specification section shall constitute acceptance of existing conditions.

B. Concrete Subfloors:
1. Verify that concrete slabs comply with ASTM F 710 “Practice for Preparing Concrete Floors to Receive Resilient Flooring”.
2. Verify that substrates are dry and free of curing compounds, sealers, hardeners, and other materials that may interfere with adhesive bond.
3. Verify that subfloors are free of cracks, ridges, depressions, scale, and foreign deposits.
4. Evaluate the RH (Relative Humidity) and pH (Alkalinity) test results for compliance with adhesives and carpet manufacturer recommendations.
   a. If a Vapor-Alkalinity Control System product has been installed to reduce water vapor emission or phosphates thereby negating the RH and pH test results, evaluate products for compatibility with adhesives and carpet products.
5. Determine adhesion characteristics by performing bond tests recommended by the carpet manufacturer.

3.2 PREPARATION

A. Coordination:
1. Coordinate work under this specification section with work specified under other sections to ensure proper and adequate interface of work.

B. Protection:
1. Protect all adjacent surfaces from drips, spray, air pollution of surrounding environment, and other damage from work.

C. Surface preparation:

1. General: Comply with CRI, Section 7, "Site Conditions- All Installations" and carpet manufacturer's written installation instructions for preparing substrates indicated to receive carpet installation.
2. Remove coatings, including curing compounds, and other substances that are incompatible with adhesives and that contain soap, wax, oil, or silicone, without using solvents. Use mechanical methods recommended in writing by the carpet manufacturer.
   a. If a Vapor-Alkalinity Control System has been installed do not remove this system.
3. Use crack and joint filler according to manufacturer's written instructions, to fill cracks, holes, and spalls in substrates.
4. Install self-leveling underlayment compound at depressed or uneven floor conditions.
5. Broom and vacuum clean substrates to be covered immediately before installing carpet.
6. After cleaning, examine substrates for moisture, alkaline salts, carbonation, or dust.
7. Proceed with installation only after unsatisfactory conditions have been corrected.

3.3 INSTALLATION

A. General:
   1. In accordance with manufacturer's written instructions and recommendations unless specifically noted otherwise.
   2. In accordance with approved submittals.
   3. In accordance with Regulatory Requirements.

B. Layout:
   1. Lines shall be straight and true.
   2. Refer to Wall and Floor Pattern Drawing(s) in the Interior and Exterior Color Schedules for layout of patterns.

C. Carpet Installation:
   1. Carpet with Pre-applied Adhesive Installation: Comply with CRI, Section 15.4, "Pre-Applied Adhesive Systems (PEEL AND STICK)."
   2. Comply with carpet manufacturer's written recommendations for seam locations and direction of carpet; maintain uniformity of carpet direction and lay of pile. At doorways, center seams under the door in closed position.
      a. Level adjoining edges at seams with hand shears.
      b. Level adjoining edges.
   3. Do not bridge building expansion joints with carpet.
   4. Cut and fit carpet to butt tightly to vertical surfaces, permanent fixtures, and built-in furniture including cabinets, pipes, outlets, edgings, thresholds, and nosing's. Bind or seal cut edges as recommended in writing by carpet manufacturer.
   5. Extend carpet into toe spaces, door reveals, closets, open-bottomed obstructions, removable flanges, alcoves, and similar openings.
   6. Maintain reference markers, holes, and openings that are in place or marked for future cutting by repeating on carpet as marked on subfloor. Use nonpermanent, nonstaining marking device.
   7. Broadloom:
      a. Install carpet cushion seams at 90-degree angle with carpet seams.

3.4 CLEANING

A. Perform the following operations immediately after installing carpet:

1. Remove and dispose of debris and recycle all unusable scrap.
2. Remove excess adhesive and other surface blemishes using cleaner recommended in writing by carpet manufacturer.
3. Remove yarns that protrude from carpet surface.
4. Vacuum carpet using commercial machine with face-beater element.

3.5 DEMONSTRATION

A. In accordance with Specification Section - PROJECT CLOSEOUT.
   1. Provide the services of a manufacturer-authorized service representative to demonstrate and train Owner's maintenance personnel as specified below.
      a. Train Owner's maintenance personnel on cleaning procedures and schedules related to cleaning and preventative maintenance.
      b. Schedule training with the Owner's maintenance personnel with at least seven (7) days advance notice.

3.6 PROTECTION

A. Protect installed carpet to comply with CRI, Section 20, "Protecting Indoor Installations."

B. Protect carpet against damage from construction operations and placement of equipment and fixtures during the remainder of construction period. Use protection methods indicated or recommended in writing by carpet manufacturer.

3.7 SCHEDULES

A. Broadloom (District Standard)**BL-1**
   1. Manufacturer: TANDUS CENTIVA.
   2. Product Name: Aftermath II 03026.
   3. Physical Characteristics:
      a. Construction Type: Stratatec/E Patterned Loop.
      b. Fiber Content: 100% nylon 6/6, 90% SD, 10% Yarn Dyed.
      c. Fiber Type: Dynex SD/E Nylon Dynex/E Nylon.
      d. Pile Height: 0.187 inches
      e. Stitches: 8.5 per inch
      f. Gage: 5/64 ends per inch
      g. Face Weight: 17 oz/sq. yd.
      h. Primary Backing: 100% Non-Woven Synthetic
      i. Secondary Backing: Closed Cell Cushion.
      j. Backing System: Powerbond Cushion RS.
      k. Size: 6' width
      l. Soil Resistance Treatment: Eco-Ensure.
      m. Antimicrobial Treatment: Not applicable
   4. Performance Characteristics:
      a. Critical Radiant Flux per ASTM E 648 “Test Method for Critical Radiant Flux of Floor-Covering Systems Using a Radiant Heat Energy Source”.
         1) Class 1, Not less than 0.45 W/sq. cm.
      b. Smoke Density per ASTM E 662 “Test method for Specific Optical Density of Smoke Generated by Solid Materials”.

1) Less than 450.

c. Methenamine Pill Test per ASTM D 2859 “Test method for Ignition Characteristics of Finished Textile Floor Covering Materials”.
   1) Shall be self-extinguishing.

d. Tuft Bind per ASTM D 1335 “Test Method for Tuft Bind of Pile Yarn Floor Coverings”.
   1) Not less than 10 lbf.

e. Delamination per ASTM D 3936 “Test Method for Resistance to Delamination of the Secondary Backing of Pile Yarn Floor Covering”.
   1) Not less than 2.5 lbf/in.

f. Electrostatic Propensity: Less than 3.5kV per AATCC 134.

B. Broadloom

BL-2

1. Manufacturer: TANDUS CENTIVA
2. Product Name: Plexus Colour IV 02875
3. Physical Characteristics:
   a. Construction Type: Symtex/E Patterned Loop
   b. Fiber Content: 50% SD Nylon/50% Yarn Dyed
   c. Fiber Type: Type 6, Dynex SD/E Nylon/Dynex/E Nylon
   d. Pile Height: 0.135 inches
   e. Stitches: 12.0 per inch
   f. Gage: 1/13 ends per inch
   g. Face Weight: 24 oz/sq. yd.
   h. Primary Backing: 100% Non-woven Synthetic
   i. Secondary Backing: closed-cell cushion
   j. Backing System: Powerbond cushion RS
   k. Size: 6' width
   l. Soil Resistance Treatment: Eco-Ensure
   m. Antimicrobial Treatment: Not applicable
4. Performance Characteristics:
   a. Critical Radiant Flux per ASTM E 648 “Test Method for Critical Radiant Flux of Floor-Covering Systems Using a Radiant Heat Energy Source”.
      1) Class 1, Not less than 0.45 W/sq. cm.
   b. Smoke Density per ASTM E 662 “Test method for Specific Optical Density of Smoke Generated by Solid Materials”.
      1) Less than 450.
   c. Methenamine Pill Test per ASTM D 2859 “Test method for Ignition Characteristics of Finished Textile Floor Covering Materials”.

1) Shall be self-extinguishing.

d. Tuft Bind per ASTM D 1335 “Test Method for Tuft Bind of Pile Yarn Floor Coverings”.
   1) Not less than 10 lbf.

e. Delamination per ASTM D 3936 “Test Method for Resistance to Delamination of the Secondary Backing of Pile Yarn Floor Covering”.
   1) Not less than 2.5 lbf/in.

C. Walk-Off **WO-1**

1. Manufacturer: TANDUS
2. Product Name: Abrasive Action
3. Physical Characteristics:
   a. Construction Type: Tufted
   b. Fiber Content: 100% nylon 6/6
   c. Fiber Type: TDX Nylon
   d. Pile Characteristic: Patterned Loop
   e. Yarn Count: 1200/2 denier
   f. Density: 7,513 oz/cu. yd.
   g. Pile Height: 0.187 inches
   h. Stitches: 8.0 per inch
   i. Gage: 1/12 ends per inch
   j. Face Weight: 24 oz/sq. yd.
   k. Primary Backing: non-woven synthetic fabric
   l. Secondary Backing: 100% Recycled content with Tru Bloc
   m. Backing System: ER3 Modular Tile
   n. Size: 18" x 18"
   o. Soil Resistance Treatment: Ensure
   p. Antimicrobial Treatment: Not applicable
4. Performance Characteristics:
   a. Critical Radiant Flux per ASTM E 648 “Test Method for Critical Radiant Flux of Floor-Covering Systems Using a Radiant Heat Energy Source”.
      1) Class 1, Not less than 0.45 W/sq. cm.
   b. Smoke Density per ASTM E 662 “Test method for Specific Optical Density of Smoke Generated by Solid Materials”.
      1) Less than 450.
   c. Methenamine Pill Test per ASTM D 2859 “Test method for Ignition Characteristics of Finished Textile Floor Covering Materials”.
      1) Shall be self-extinguishing.
   d. Tuft Bind per ASTM D 1335 “Test Method for Tuft Bind of Pile Yarn Floor Coverings”.
      1) Not less than 10 lbf.
   e. Delamination per ASTM D 3936 “Test Method for Resistance to Delamination of the Secondary Backing of Pile Yarn Floor Covering”.
      1) Not less than 2.5 lbf/in.
   f. Electrostatic Propensity: Less than 3.5 kV per AATCC 134

END OF SECTION

SECTION 097200 - WALL COVERINGS

PART 1 - GENERAL

1.1 SUMMARY

A. This Section includes the following:
   1. Provide all materials, labor, equipment and services necessary to furnish and install FRP Panels, Vinyl Covered Tackboard Panels, Vinyl Wallcoverings, Acoustical Wall Boards, Acoustical Panels, Acoustical Carpet, accessories and other related items necessary to complete the Project as indicated by the Contract Documents unless specifically excluded

B. Related Sections: The following Project Manual Sections contain requirements that relate to this section:
   1. ALL DIVISION 00 SPECIFICATION SECTIONS.
   2. ALL DIVISION 01 SPECIFICATION SECTIONS.
   3. 06 41 23 MODULAR CASEWORK
   4. 09 24 00 CEMENT PLASTER
   5. 09 29 00 GYPSUM BOARD
   6. 09 50 00 ACOUSTICAL CEILINGS
   7. 09 65 10 RESILIENT BASE AND ACCESSORIES
   8. 09 68 40 CARPET
   9. 10 11 00 VISUAL DISPLAY BOARDS
   10. 10 28 13 TOILET ACCESSORIES
   11. 10 44 00 FIRE PROTECTION SPECIALTIES
   12. ALL SPECIFICATION SECTIONS IN THE FACILITY SERVICES SUBGROUP.

1.2 SUBMITTALS

A. Submit in accordance with Specification Section - SUBMITTAL PROCEDURES:
   1. Product Data.
      a. Submit manufacturer's full color range (including any standard, premium and custom colors) of all Wall Coverings for selection by the Architect.
   2. Samples.
      a. Provide 6 inch square sample of each Wall Covering product for color and pattern selected.
      b. Provide 6 inch lineal samples of each Wall Covering trim material specified.
   3. Closeout Submittals in accordance with the following:
      a. Warranty in accordance with Specification Section - WARRANTIES.

1.3 QUALITY ASSURANCE

A. Qualifications:
   1. Installer Qualifications:
      a. Engage an experienced Installer who has successfully completed three (3) projects of similar scope and size to that indicated for this Project.

b. Engage an experienced Installer who is certified in writing by the manufacturer listed herein as qualified to install manufacturer's product (or system) in accordance with manufacturer's warranty requirements.

2. Manufacturer/Supplier Qualifications:

a. Firm experienced in successfully producing/supplying products similar to that indicated for this Project, with sufficient production/supply capacity to produce/supply required units without causing delay in the work.

B. Regulatory Requirements:

1. In accordance with Specification Section - REGULATORY REQUIREMENTS, and the following:

a. CARB Materials and equipment used for this Project shall comply with the current applicable regulations of the California Air Resources Board (CARB) and the Environmental Protection Agency (EPA), in the area where the project is located.

b. CBC California Building Code (CBC 803.1.1)

1.4 DELIVERY, STORAGE, AND HANDLING

A. Packing, shipping, handling, and unloading:

1. Products shall be individually wrapped.
2. Products shall be handled in such a manner as to assure that they are free from dents, scratches and other damage.

B. Acceptance at Site:

1. Products must be in manufacturer's original unopened containers with labels indicating brand name, model, and grade.
2. Damaged products will not be accepted.

C. Storage and protection:

1. Products shall be stored above ground on level platforms, six (6) inches above ground, allowing air circulation under stacked units.

a. Cover materials with protective waterproof covering providing for adequate air circulation and ventilation.

1.5 PROJECT CONDITIONS

A. Environmental requirements:

1. Temperature: Maintain ambient temperature in space to receive products between sixty (60) degrees Fahrenheit and eighty (80) degrees Fahrenheit for three (3) days prior, during, and three (3) days minimum following installation. Inform the Owner of ambient temperature requirements for products installed and maintain until Substantial Completion and turn-over of the building or facility to the Owner.

B. Existing Conditions:

1. Examine site and compare it with the drawings and specifications. Thoroughly investigate and verify conditions under which the work is to be performed. No allowance will be made for extra work resulting from negligence or failure to be acquainted with all available information concerning conditions necessary to estimate the difficulty or cost of the work.

1.6 WARRANTY

A. Contractor's General Warranty:
   1. In accordance with Specification Section - WARRANTIES.

B. Manufacturer’s Warranty:
   1. In accordance with manufacturer's written standard warranty:
      a. Warranty Period One (1) Year.

C. Installer's Warranty:
   1. In accordance with the terms of the Specification Section - WARRANTIES:
      a. Warranty period One (1) Year.

PART 2 - PRODUCTS

2.1 MANUFACTURERS

A. Products specified are from companies listed below, or approved equivalent. These products listed herein establish the size, pattern, color range and function selected by the Architect for this Project. Manufacturers listed as acceptable alternative manufacturers must still comply with the requirements of the products listed in order to be approved as an equivalent during the Submittal Process. If the acceptable alternative manufacturers listed are not approved during the Submittal Process due to non-compliance with the contract documents, then the Contractor shall submit product specified.
   1. Specified FRP Panel product manufacturer:
      a. SEQUENTIA, INC. with NUDO Aluminum Trim Accessories.
      b. Acceptable alternative manufacturers:
         1) BP CHEMICALS with NUDO Aluminum Trim Accessories.
         2) MARLITE with NUDO Aluminum Trim Accessories.
         3) NUDO PRODUCTS, INC. with NUDO Aluminum Trim Accessories.
   2. Specified Vinyl Covered Tackboard product manufacturer:
      a. CHATFIELD-CLARKE COMPANY, INC., a Divison of KOROSEAL WALLCOVERINGS, as distributed through WESTERN BUILDING MATERIALS.
      b. Acceptable alternative manufacturers:
         1) KOROSEAL SCHOOL COLLECTION as manufactured by KOROSEAL WALLCOVERINGS, as distributed through WESTERN BUILDING MATERIALS.
         2) LAMVIN INC.

B. Products from other manufacturers not listed must submit in accordance with Specification Section - SUBSTITUTION PROCEDURES.

2.2 MATERIALS

A. FRP Panels:
   1. Width 48 inches.

2. Thickness 0.090 inches.
3. Fire Rating in accordance with ASTM E 84 "Standard Test Method for Surface Burning Characteristics of Building Materials" (Class C):
   a. Flame Spread Maximum 175.
   b. Smoke Developed Maximum 270.
4. Finish:
   a. Pattern Pebble finish.
5. Color as selected from manufacturer's full color palette (including standard, premium and custom colors).
6. Accessories:
   a. Adhesive as recommended in writing by manufacturer that meets the CARB requirements of the place where the Project is located.
   b. Sealant.
      1) Set all perimeter J-Mold trim in a continuous bead of silicon sealant.
7. Aluminum Trim by NUDO PRODUCTS, INC.:
   a. Provide inside, outside, division and edge trim moldings as required for the conditions present in the project.
   b. Lengths 96 inches
   c. Thickness0.090 inch
   d. Trim Shapes:
      1) J-Mold NUDO A-28.
      2) Divider NUDO A-30.
      3) Inside Corners NUDO A-32.
      4) Outside Corners NUDO A-34.
   e. Finish: Powder Coated, in colors to match the field color of the FRP Panels.

B. Vinyl Covered Tackboard:
1. Tackboard Size: 1/2" x 48" wide by maximum practical height to minimize joints.
   a. Wood fiber substrate tackboard shall be 1/2" thick, cellulose fiberboard sheathing, beveled side edges and square end edges, in accordance with ASTM C 208 “ÓSpecification for Cellulosic Fiber Insulating Board”, complying with the minimum standards listed below:
      1) Weight, lb/1000 ft2 640
      2) Transverse strength, lbf 14.5
      3) Tensil Strength, lb/in2 242
      4) MOR, lb/in2 380
      5) "k" Factor 0.37
      6) Maximum Flame Spread - Class B 75
      7) Maximum Smoke Developed - Class B 175
2. Finish:
   a. Architect to select from manufacturer's textures and colors from the following series:
      1) Color 1: Type I, Group 1.
      2) Color 2: Koroseal "School Collection", Meratone non-standard price group.
   b. All vinyls used are to be 15 oz. total weight per lineal yard (Type I) with a cloth backer to insure consistent emboss.
      1) Class A vinyls shall be tested in accordance with ASTM E 84 "Standard Test Method for Surface Burning Characteristics of Building Materials", with the following maximum requirements:
         a) Maximum Flame Spread - Class A 25

b) Maximum Smoke Developed - Class A 5

3. Edge:
   a. Beveled, long side edges with vinyl wrapped to back side. Short end edges to be square cut with vinyl flush with end of substrate board.
4. Accessories:
   a. Provide vinyl covered PVC moldings in the following configurations: edge, inside and outside corner, and intermediate splice moldings. Provide colors to match the field panels. Use of moldings and locations shall be indicated on the drawings.
5. Overall panel when wrapped with Class A vinyls shall meet flame spread and smoke developed index approval in accordance with ASTM E 84 "Standard Test Method for Surface Burning Characteristics of Building Materials", as follows:
   a. Maximum Flame Spread - Class B75
   b. Maximum Smoke Developed - Class B 175
6. Adhesive:
   a. In accordance with tackboard panel manufacturer's written recommendations, and in compliance with CARB Standards and VOC requirements.

C. Tackable Wallcovering:
1. WALLTALKERS "Tac-wall": Uni-color resilient homogeneous tackable linoleum surface consisting of linseed oil, granulated cork, rosin binders, and dry pigments calendered onto natural burlap backing. Color shall extend through thickness of material.
2. Size as indicated on the drawings. Color as selected by the Architect.
3. Provide color matched caulk.
4. Adhesive: Solvent-free SBR type linoleum adhesive or polyvinyl acetate dispersion type (contact adhesive) when used in a press.
5. J-Trim: Clear satin, anodized aluminum, 1/4 inch trim.
6. Q-Pins: 24 Translucent Push Pins.
7. Surface Burning Characteristics Classification: Provide materials that meet classification ratings below:
   a. ASTM E84 (Flame Spread and Smoke Developed):
      1) Flame Spread: Class II
      2) Smoke Developed: Not greater than 75.

PART 3 - EXECUTION

3.1 EXAMINATION

A. Site verification of conditions:
1. Prior to the execution of the work under this specification section, inspect the installed work executed under other sections of this Project Manual, which affect the execution of work under this specification section.
2. Report unacceptable conditions to the Architect. Do not begin work until unacceptable conditions have been corrected.
3. Execution of work under this specification section shall constitute acceptance of existing conditions.

3.2 PREPARATION

A. Coordination:

1. Coordinate work under this specification section with work specified under other sections to ensure proper and adequate interface of work.

B. Protection:
1. Protect all adjacent surfaces from drips, spray, air pollution of surrounding environment, and other damage from work under this specification section.

C. Surface preparation:
1. Prepare surface in accordance with manufacturer's written instructions and recommendations.
2. Clean substrates of substances (oil, grease, rolling compounds, incompatible primers, loose mill scale, etc.) which could impair bond of materials specified within this section.

3.3 INSTALLATION

A. General:
1. In accordance with manufacturer's written instructions and recommendations unless specifically noted otherwise.
2. In accordance with approved submittals.
3. In accordance with Regulatory Requirements.
4. Set plumb, level, and square.

B. Layout:
1. Lines shall be straight and true.

3.4 FIELD QUALITY CONTROL

A. Inspection:
1. As required by Regulatory Requirements.
2. Schedule inspections and notify the Architect, Project Inspector and any other regulatory agencies of the time at least 48 hours prior to the inspection.
3. No work shall be without the inspections required by Regulatory Requirements.

3.5 CLEANING

A. Clean in accordance with Specification Section - PROJECT CLOSEOUT.
1. Clean any soiled surfaces immediately.
2. Finish shall be clean and ready for the application of any additional finishes.
3. In accordance with manufacturer's written instructions and recommendations.

END OF SECTION

SECTION 099100 - PAINTING

PART 1 - GENERAL

1.1 SUMMARY

A. This Section includes the following:
   1. Provide all material, labor, equipment and services necessary to furnish and install Painting, accessories and other related items necessary to complete the Project as indicated by the Contract Documents unless specifically excluded.
      a. Material and Equipment to be Painted: Paint all piping, unwrapped ductwork, electric conduits where exposed to view. Prime and paint all exposed, factory finished, mechanical and electrical equipment and accessories which, are exposed to view on the exterior and/or in the interior of buildings except as specifically excluded.
      b. Material and Equipment not to be Painted: Do not paint piping, ductwork, equipment and machinery located in attic spaces, above furred or suspended ceilings, in furred pipe or duct spaces. Do not paint factory finished equipment or machinery located in mechanical rooms or mechanical buildings, attics (unless specifically scheduled), furred or suspended ceilings.

B. Related Sections: The following Project Manual Sections contain requirements that relate to this section:
   1. ALL DIVISION 00 SPECIFICATION SECTIONS.
   2. ALL DIVISION 01 SPECIFICATION SECTIONS.
   3. 04 22 00 CONCRETE MASONRY UNITS
   4. 05 12 00 STEEL AND FABRICATIONS
   5. 05 30 00 METAL DECK
   6. 06 18 00 GLUE-LAMINATED CONSTRUCTION
   7. 06 41 23 MODULAR CASEWORK
   8. 07 31 13 SHINGLES
   9. 07 40 00 METAL PANELS
   10. 07 60 00 SHEET METAL (Shop Priming)
   11. 07 72 00 ROOF ACCESSORIES
   12. 07 92 00 SEALANTS
   13. 08 11 00 METAL DOORS AND FRAMES
   14. 08 14 16 WOOD DOORS
   15. 08 31 13 ACCESS DOORS AND FRAMES
   16. 08 80 00 GLASS
   17. 09 24 00 CEMENT PLASTER
   18. 09 29 00 GYPSUM BOARD
   19. 09 50 00 ACOUSTICAL CEILINGS
   20. 09 65 10 RESILIENT BASE AND ACCESSORIES
   21. 09 67 23 RESINOUS FLOORING
   22. 09 68 40 CARPET
   23. 10 05 00 MISCELLANEOUS SPECIALTIES
   24. 10 21 13 TOILET PARTITIONS
   25. 10 44 00 FIRE PROTECTION SPECIALTIES
   26. ALL SPECIFICATION SECTIONS IN THE FACILITY SERVICES SUBGROUP.

1.2 REFERENCES

A. Standards:
1. In accordance with the following standards:
   a. CA-CHPS - California High Performance Schools
      1) 2011-CA-CHPS Addendum.
   b. MPI Master Painters Institute (MPI - Architectural Painting Specification Manual, MPI – Maintenance Repainting Manual, and the MPI – Glossary, and all recent amendments).
   c. PDCA Painting and Decorating Contractors of America, latest edition of the Architectural Specification Manual, as prepared by Specification Services, Inc., Washington State Council of the PDCA.

1.3 DEFINITIONS

A. The following definitions are just some of the more important definitions used within this section, and were taken from the MPI Glossary Manual, or used to simplify language used by the Architect. These definitions and others stated within the Manual apply for this Specification Section.
1. Acrylic Latex An aqueous dispersion of acrylic resins.
2. Acrylic Resin A/R - Synthetic resins made by polymerizing esters of acrylic acid.
3. A/U Aliphatic Urethane
4. A/A/U Aliphatic Acrylic Urethane
5. Blocking Sticking or bonding together of two painted surfaces that are in direct contact. Most often caused by stacking painted articles before dry or reaching a "block free" (or "non-blocking") stage.
6. DFT Dry Film Thickness – the depth or thickness of a coating in the dry state. Expressed in mils (1/1000 inch) or microns.
7. DRY FALL A Fog Paint designed to be applied by spray and dries fast enough that the overspray will be a dry powder after falling a certain distance. The dust can then be swept or vacummed up.
8. ODFT "Overall Dry Film Thickness" – the depth or thickness of a complete coating system in the dry state. Expressed in mils (1/1000 inch) or microns.

1.4 SUBMITTALS

A. Submit in accordance with Specification Section - SUBMITTAL PROCEDURES:
1. Product Data.
   a. Submit manufacturer's full color range (including any standard, premium and custom colors) for selection by the Architect.
   b. Material Safety Data Sheets will be turned over to the Owner in compliance with local rules and regulations, but will not be reviewed.
   c. Materials Lists:
      1) Format in accordance with Article in this section titled "Paint Finish Schedule".
   d. Additional submittals to substantiate proposed equivalent systems.
2. Samples.

a. Brushouts: In accordance with Specification Section - SUBMITTAL PROCEDURES.
b. For each color and finish selected provide paint brushouts showing color tint graduation of each coat to and including the final color coat.
1) Selected colors and finishes:
a) Size:8 1/2" x 11" boards.
b) Quantity: 3 boards of each color and finish.
c) Board material wherever possible and for transparent finishes shall be same as material to be finished. Opaque finishes may be on heavy card stock.

3. Closeout Submittals in accordance with the following:
a. Maintenance Data in accordance with Specification Section - PROJECT CLOSEOUT.
b. Project Documents in accordance with Specification Section - PROJECT DOCUMENTS.
c. Warranty in accordance with Specification Section - WARRANTIES.

1.5 QUALITY ASSURANCE

A. Qualifications:
1. Material Qualifications:
a. Where possible (except for specified materials), paint materials shall be products of only one manufacturer.
b. All materials, preparation and workmanship shall conform to requirements of the specified edition of the Architectural Painting Specification Manual by the Master Painters Institute (hereafter referred to as the MPI Painting Manual), unless otherwise indicated.
c. Flame Spread Ratings in accordance with ASTM E 84 "Standard Test Method for Surface Burining Characteristics of Building Materials":
1) Paint finishes in required exit stairways, corridors and exitways must meet flame spread ratings as required by regulatory agencies.
2) Class A - Tunnel Test 0-25 for enclosed required exit stairways and other exit ways.
3) No interior paint or wall finish will be permitted having a tunnel test in excess of 200. All paint materials must be certified that materials meet these requirements.
d. Manufacturer's Written Instructions - One for the Architect, Contractor and the Owner:
1) Submit three (3) copies of manufacturer's written instructions.
e. Compatibility:
1) Paint materials and equipment shall be compatible in use.
2) Finish coats shall be compatible with prime coat.
3) Prime coats shall be compatible with surface to be coated.
4) Tools and materials shall be compatible with coating to be applied.
f. Air Quality:
1) Paint materials and equipment used for application will comply with CARB Air Quality Control Standards in effect at the Project Site and at the time of application.
2. Installer Qualifications:

a. Engage an experienced Installer who has successfully completed three (3) projects of similar scope and size to that indicated for this Project.
   1) Only qualified journeypersons, as defined by local jurisdiction, shall be engaged in painting and decorating work. Apprentices may be employed provided they work under the direct supervision of a qualified journeyperson in accordance with trade regulations.

3. Manufacturer/Supplier Qualifications:
   a. Firm experienced in successfully producing/supplying products similar to that indicated for this Project, with sufficient production/supply capacity to produce/supply required units without causing delay in the work.

B. Regulatory Requirements:
1. In accordance with Specification Section - REGULATORY REQUIREMENTS, and the following:
   a. CAL/OSHA California/Occupational Safety and Health Act
   b. CARB Materials and equipment used for this Project shall comply with the current applicable regulations of the California Air Resources Board (CARB) and the Environmental Protection Agency (EPA), in the area where the project is located.
   c. CBC California Building Code (CBC 803.1.1)

C. Mockups: Provide a full-coat benchmark finish sample for each type of coating and substrate required for Architect's review. Duplicate finish of approved sample Submittals.
1. Wall Finishes shall be at least 100 sq. ft., suitably marked "MOCKUPS" and protected for the duration of the construction Project.
2. Small areas and items can be selected by the Contractor, suitably marked "MOCKUPS" and protected for the duration of the construction Project.
3. Apply benchmark samples, according to requirements for the completed Work, after permanent lighting and other environmental services have been activated. Provide required sheen, color, and texture on each surface.
4. Approved mockups (wall areas and small areas or items) may become part of the completed Work if undisturbed at time of Substantial Completion.

D. Meetings:
1. Pre-Installation: Scheduled by the Contractor prior to the start of work.
   a. Coordinate the work with all other related work.
   b. Identify any potential problems that may impede planned progress and proper installation of work regarding quality of installation and warranty requirements.
2. Progress: Scheduled by the Contractor during the performance of the work.
   a. Review for proper installation of work progress.
   b. Identify any installation problems and acceptable corrective measures.
   c. Identify any measures to maintain or regain project schedule if necessary.
3. Completion: Scheduled by the Contractor upon proper completion of the work.
   a. Inspect and identify any problems that may impede issuance of warranties and guaranties.
   b. Maintain installed work until the Notice of Substantial Completion has been executed.

1.6 DELIVERY, STORAGE, AND HANDLING

A. Acceptance at Site:

1. Products must be in manufacturer's original unopened containers with labels indicating brand name, model, and grade.
2. Damaged products will not be accepted.

B. Storage and protection:
1. Products shall be stored above ground on level platforms, six (6) inches above ground, allowing air circulation under stacked units, in a locked, clean and neat, well ventilated area.
   a. All receiving, opening and mixing shall be done in this area.
   b. Oily rags and waste shall be removed from area each night and all other precautions shall be taken to avoid danger of fire.
   c. Empty containers shall not be removed from site, unless otherwise approved by the Architect.
   d. Cover materials with protective waterproof covering providing for adequate air circulation and ventilation.

1.7 PROJECT CONDITIONS

A. Environmental requirements:
1. Rain or Fog:
   a. No work under this section shall be started or maintained under threat of rain.
   b. Surfaces shall be painted only when they are free from moisture.
   c. No painting of exterior surfaces shall be done less than 72 hours of actual drying weather after a rain or during periods of dew or fog.
   d. Perform no painting or decorating work when the maximum moisture content of the substrate exceeds:
      1) 12 percent for concrete and masonry (clay and concrete brick / block).
      2) 15 percent for wood.
      3) 12 percent for plaster and gypsum board.
   e. Perform no painting or decorating work when the relative humidity is above 85 percent or when the dew point is less than 5 degrees F variance between the air / substrate temperature.
2. Temperature: No painting shall be done when ambient air and substrate temperatures are below 50 degrees F for both interior and exterior work.
3. Alkalinity: An alkali level of between 7.0 and 8.5 pH is suitable for painting. Any reading above that level, then the surface shall be neutralized as required for the surface to be painted.
   a. Methods shall be consistent with MPI - Architectural Painting Specification Manual, and shall not result in any adverse condition causing inadequate adhesion, improper curing and drying, or durability of paint system.
4. No exterior painting shall be done during winds or dusty conditions.
5. Perform no exterior painting and decorating work unless environmental conditions are within MPI and paint manufacturer's requirements or until adequate weather protection is provided.
   a. Where required to meet project schedules, suitable weatherproof covering and sufficient heating facilities shall be in place to maintain minimum ambient air and substrate temperatures for 24 hours before, during and after paint application.
6. Perform no interior painting or decorating work unless adequate continuous ventilation and sufficient heating facilities are in place to maintain minimum ambient air and substrate temperatures above minimum requirements for 24 hours before, during and after paint application.

a. Where required to meet project schedules, provide supplemental ventilating and heating equipment if ventilation and heating from existing system is inadequate to meet minimum requirements.

B. Existing Conditions:
1. Examine site and compare it with the drawings and specifications. Thoroughly investigate and verify conditions under which the work is to be performed. No allowance will be made for extra work resulting from negligence or failure to be acquainted with all available information concerning conditions necessary to estimate the difficulty or cost of the work.
2. Concrete and masonry surfaces shall be installed at least 28 days prior to painting and decorating work and shall be visually dry on both sides.
3. Conduct all moisture tests using a properly calibrated electronic Moisture Meter, except test concrete floors for moisture using a simple cover patch test.
4. Test concrete, masonry and plaster surfaces for alkalinity as required.
5. Contractor shall provide a minimum lighting level of 323 Lux (30 foot candles) on surfaces to be painted or decorated.

1.8 WARRANTY

A. Contractor's General Warranty:
1. In accordance with Specification Section - WARRANTIES.
a. Original adherence of all materials and no evidence of any surface defect shall be maintained during warranty period.
b. Color at end of warranty period shall remain free from serious fading and any discernible variations shall be uniform.

B. Manufacturer's Warranty:
1. In accordance with manufacturer's written standard warranty:
2. Provide Paint Manufacturer's special ten (10) year Material Warranty co-endorsed by the installer for exterior paint application of cement plaster surfaces.
a. Warranty period Ten (10) Years.
3. Provide Water-Repellant Manufacturer's special Weatherproofing Warranty co-endorsed by the installer for exterior sealer application of concrete or concrete block surfaces.
a. Warranty period Ten (10) Years.

C. Installer's Warranty:
1. Paint Installer's Warranty:
a. Installer will certify that a Paint Manufacturer's Representative tested the substrate according to Paint Manufacturer's standard procedures and have submitted project information and test patch forms.
b. Installer shall certify that Paint Manufacturer's products were installed on the structure in accordance with manufacturer's specification requirements.
c. Installer further agrees that if installer fails to fulfill their obligation under this certification statement within 30 days notice of the complaint, Paint Manufacturer may proceed with the investigation and repairs and shall pay the entire material cost, providing it wasn't the installer's responsibility.
2. Water-Repellant Installer's Warranty:
a. Warranty period Two (2) Years.

b. Installer will certify that a Water-Repellant Manufacturer's Representative tested the substrate according to Water-Repellant Manufacturer's standard procedures and have submitted project information and test patch forms.
c. Installer shall certify that Water-Repellant Manufacturer's products were installed on the structure in accordance with manufacturer's specification requirements.
d. Installer agrees:
   1) Investigate all complaints of leakage and/or water absorption on surfaces to which Water-Repellant Manufacturer's weatherproofing products were applied and provide a written report of the cause to Water-Repellant Manufacturer within thirty (30) days of the complaint.
   2) Re-apply Water-Repellant Manufacturer's weatherproofing products according to Water-Repellant Manufacturer's standard procedures at installer's cost for labor and material if the leakage and/or water absorption is due to improper surface preparation, application and/or improper use of material.
   3) Request authority from Water-Repellant Manufacturer to re-apply Water-Repellant Manufacturer's weatherproofing products at Water-Repellant Manufacturer's expense to areas, which were not rendered hydrophobic due to imperfect weatherproofing materials.
e. Installer further agrees that if installer fails to fulfill their obligation under this certification statement within 30 days notice of the complaint, Water-Repellant Manufacturer may proceed with the investigation and repairs and shall pay the entire cost, providing it wasn't the installer's responsibility.

1.9 MAINTENANCE

A. Extra Materials:
   1. Quantity: 10 percent of quantity needed to paint Project, but not to exceed one gallon, of each type and color of finish coat used.
   2. Identification: At project completion, provide an itemized list complete with manufacturer, paint type and color coding for all colors used, and locations within the Project for Owner's later use in maintenance.

PART 2 - PRODUCTS

2.1 MANUFACTURERS

A. Products specified are from companies listed below, or approved equivalent. These products listed herein establish the size, pattern, color range and function selected by the Architect for this Project. Manufacturers listed as acceptable alternative manufacturers must still comply with the requirements of the products listed in order to be approved as an equivalent during the Submittal Process. If the acceptable alternative manufacturers listed are not approved during the Submittal Process due to non-compliance with the written documents, then the Contractor shall submit product specified.
   1. Specified paint coating product manufacturer, or approved equivalent:
      a. PPG PAINTS (formerly AKZO NOBEL, makers of GLIDDEN PROFESSIONAL, or ICI DULUX PAINTS).

1) Composed of the following companies: AMERITONE PAINT, DECRATREND, DEVOE COATINGS, DEVOE PAINT, FLOOD WOOD CARE, FULLER O'BRIEN, GLIDDEN, and SINCLAIR PAINT.

b. Also specified: GEMINI and MONOPOLE.

c. Acceptable alternative manufacturers:

1) DUNN EDWARDS, FRAZEE PAINTS, KELLY MOORE PAINTS, SHERWIN WILLIAMS and VISTA PAINT. Submittals by these manufacturers, subject to specification requirements, must be in accordance with Section - SUBMITTAL PROCEDURES.

a) Paint material quality and systems shall be equal to numbers and systems listed in Paint Finish Schedule at the end of this section.

b) If submitted paint numbers differ from Darden Architects, Inc. Paint Equivalency List, additionally submit explanation of difference and certification letter from the installer attesting that the different product is equal to or better than specified; i.e. equivalent or better percentage of solids, system ODFT, and VOC compliant. Paint Equivalency List published by Darden Architects, Inc. is available only for this project at written request.

2. Specified water-borne Alkyltrialkoxy Silane water repellent product manufacturer, or approved equivalent:

a. EVONIK DEGUSSA CORPORATION.

3. Specified Graffiti coating manufacturer, or approved equivalent:

a. Sacrificial:

1) VISUAL POLLUTION TECH, INC.

b. Non-sacrificial:

1) BASF HYDROZO.

2) EVONIK DEGUSSA CORPORATION.

3) THIS STUFF WORKS - TSW

B. Products from other manufacturers not listed must submit in accordance with Specification Section - SUBSTITUTION PROCEDURES.

2.2 MATERIALS

A. Material Compatibility: Provide block fillers, primers, and finish-coat materials that are compatible with one another and with the substrates indicated under conditions of service and application, as demonstrated by manufacturer based on testing and field experience.

1. Shop Primers or Coil-Coated Primers: It shall be assumed that all Shop Primed or Coil-Coated primed metals do not meet the requirements for primer material and mil thickness as defined herein. As such, all Shop Primed or Coil-Coated primed metals shall be field primed as indicated in the schedule.

B. Material Quality: Provide manufacturer's best-quality coating material of the various coating types specified that are factory formulated and recommended by manufacturer for application indicated. Paint-material containers not displaying manufacturer's product identification will not be acceptable.

1. All materials used shall be lead and mercury free and shall have low VOC content to meet the applicable CARB standards in the area where the Project is located.

2. All paint materials shall have good flowing and brushing properties and shall dry or cure free of blemishes, sags, air entrapment, etc.

3. All Water-Repellant Coatings shall comply with the following:

a. Provide Alkyltrialkoxy Silane combination with a ratio concentration and application procedure as recommended by the manufacturer with the ability to cover in one or more applications for a ten year warranty in accordance with the following substrates:
   1) Thin Brick.
   2) Concrete.
   3) Concrete Masonry Units
   4) Split-Faced Concrete Masonry Units.
b. Color Clear.
c. Active Substance Alkyltrialkoxy Silane.
d. Active Content 100 percent.
e. Solvent Water.
f. Flash Point (Concentrate) 93 degrees F.
g. Flash Point (Mixed) 200 degrees F.
h. Density 7.77 lbs./gallon.
i. VOC (19:1) 50 g/liter (Maximum).
j. VOC (9:1) 100 g/liter (Maximum).
k. VOC (6:1) 200 g/liter (Maximum).

4. All Bituminous Paint:
   a. Shall comply with Cold-Applied Asphalt-Mastic paint complying with SSPC-Paint 12 requirements, except containing no asbestos, formulated for 30-mil thickness per coat.

2.3 MIXES

A. Mixing and Tinting:
1. Unless otherwise specified herein or pre-approved, all paint shall be ready-mixed and pre-tinted at the factory. Re-mix all paint in containers prior to and during application to ensure break-up of lumps, complete dispersion of settled pigment, and color and gloss uniformity.
2. Paste, powder or catalyzed paint mixes shall be mixed in strict accordance with manufacturer's written instructions.
3. Where thinner is used, addition shall not exceed paint manufacturer's written recommendations.
4. Do not use kerosene or any such organic solvents to thin water-based paints.
5. Thin paint for spraying in strict accordance with paint manufacturer's written instructions. If directions are not on the container, obtain instructions in writing from the manufacturer and provide one copy of instructions to the Project Inspector.

2.4 FINISHES

A. Finish Colors:
1. Unless otherwise specified herein, all painting work shall be in accordance with MPI Premium Grade finish requirements as a minimum.
2. Determined by Architect prior to or as work progresses.
   a. Colors to be selected from paint manufacturer's full color systems, including standard, premium and custom colors.
3. When deep or ‘Ultra colors’ are selected, submit to Architect proposed revision to specified system product numbers, according to manufacturer’s written recommendations.

a. When deep or ultra colors are selected for use on walls or special color treatments such as graphics or many color changes are desired, the areas and extent of use will be clarified upon request of the Contractor.

4. Gloss standards, in accordance with MPI standards, using the ASTM D 523 "Test for Specular Gloss", are as follows:

5.

Gloss Level	Description	Units at 60 degrees	Units at 85 degrees
G1	Matte or Flat Finish	0 to 5	10 max.
G2	Velvet Finish	0 to 10	10 to 35
G3	Eggshell Finish	10 to 25	10 to 35
G4	Low Sheen or Satin Finish	20 to 35	35 min.
G5	Semi-Gloss Finish	35 to 70	
G6	Gloss Finish	70 to 85	
G7	High-Gloss Finish	Greater than 85	

PART 3 - EXECUTION

3.1 EXAMINATION

A. Site verification of conditions:

1. Prior to the execution of the work under this specification section, inspect the installed work executed under other sections of this Project Manual that affects the execution of work under this specification section.
   a. Thoroughly examine (and test as required, if necessary) all conditions and surfaces to be painted and report in writing to the Contractor and the Architect any conditions or surfaces that will adversely affect the work of this section.
   b. The Installer is responsible for verifying the compatibility of items primed by others and the finish coat or coats required by the Contract Documents. Should an incompatibility occur, the Installer (along with the manufacturer's technical representative) will recommend compatible alternatives for the Architect's approval.
2. Report unacceptable conditions to the Architect. Do not begin work until unacceptable conditions have been corrected.
3. Execution of work under this specification section shall constitute acceptance of existing conditions.

3.2 PREPARATION

A. Protection before Application:

1. Protect all adjacent surfaces from drips, spray, air pollution of surrounding environment, and other damage from work under this specification section.
2. Removal of Hardware and Miscellaneous Items:
   a. Coordinate the work with other trades so that they remove electrical outlet and switch plates, mechanical diffusers, escutcheons, registers, surface hardware, fittings, fastenings, and the like prior to starting work under this Section.
   b. Store during painting work. Coordinate cleaning and reinstallation after painting work is finished.
   c. Do not use solvent or cleaning agents detrimental to permanent finishes.

d. Remove doors before painting to paint bottom and top edges, and then re-hang.

3. Protect adjacent surfaces against damage from painting operations. Correct damage to work of other trades by cleaning, repairing, replacing, and refinishing, as approved by Architect, and leave in an undamaged condition.
   a. Protective means include: Drop cloths, shields, masking templates, etc.
   b. Exterior surfaces include: landscaping, walks, drives, adjacent building surfaces, glazing, aluminum surfaces, etc.
   c. Interior surfaces include: rating and instruction labels on doors, frames, equipment, piping, etc.

B. Surface preparation:
1. General:
   a. In accordance with MPI Standards.
   b. Surfaces to be finished shall be clean, dry and free of dirt, passivators, oils, loose paint and any other contamination that would adversely affect adhesion, protective properties or appearance of the coating.
   c. All oil, grease, dirt or other foreign matter shall be removed by washing with a solution of cleaner and water, rinse and allow to dry.
   d. If efflorescence, alkali or glazed surfaces exist, neutralize with acid wash followed by thorough water rinsing.
      1) Protect all adjacent substrates or materials that could be affected by acid washing or water rinsing. Collect all washing & rinsing residue and dispose of away from structures.
2. Wood Substrates - (New and Repaint Surfaces):
   a. Interior Surfaces: MPI Interior Surface Preparation, Chapter 3, Section 3.
   b. Exterior Surfaces: MPI Exterior Surface Preparation, Chapter 2, Section 3.
   c. Fill holes and other imperfections with putty or plastic wood to match natural finish before and after application of prime or seal coat.
   d. Provide necessary extra treatment over knots, pitch pockets, sappy portions and other defects to produce a proper base for painting.
   e. Sand down raised grain or rough surfaces.
   f. Clean surfaces free of dust, soil and other foreign material.
3. Gypsum Board Substrates - (New and Repaint Surfaces):
   a. Interior Surfaces: MPI Interior Surface Preparation, Chapter 3, Section 3.
   b. Clean surfaces of dirt, laitance, excess mortar and foreign matter.
   c. Do all necessary minor sanding.
   d. Fill minor cracks, scratches, holes and nail heads.
4. Plaster Substrates - (New and Repaint Surfaces):
   a. Interior Surfaces: MPI Interior Surface Preparation, Chapter 3, Section 3.
   b. Exterior Surfaces: MPI Exterior Surface Preparation, Chapter 2, Section 3.
   c. Clean surfaces of dirt, laitance, excess mortar and foreign matter.
   d. Neatly patch, flush and smooth, minor cracks, holes, pits and other imperfections in plaster or concrete surfaces.
5. Concrete Substrates - (New and Repaint Surfaces):
   a. Interior Surfaces: MPI Interior Surface Preparation, Chapter 3, Section 3.
   b. Exterior Surfaces: MPI Exterior Surface Preparation, Chapter 2, Section 3.
   c. Clean surfaces of dirt, laitance, excess mortar and foreign matter.
   d. Neatly patch, flush and smooth, minor cracks, holes, pits and other imperfections in plaster or concrete surfaces.
6. Metal Substrates - (New and Repaint Surfaces):
   a. Interior Surfaces: MPI Interior Surface Preparation, Chapter 3, Section 3.

b. Exterior Surfaces: MPI Exterior Surface Preparation, Chapter 2, Section 3.
c. Shop Primed or Factory Primed Surfaces:
   1) Shop Primed or Factory Primed Surfaces are considered "un-primed" due to their mil thicknesses provided, and common incompatibility issues with specified coating system; and are suitable only for protection during transite (shipment and storage) until incorporated into the Project.
   2) Remove dust, oil and rust.
   3) Sand surface lightly.
   4) Touch up imperfections, scratches, surface damage, etc. with the appropriate primer.
   5) Field connection welds, soldered joints, burned and abraded portions shall be spot primed with the appropriate primer.
d. Coil-Coated Product Surfaces:
   1) Coil-Coated Product Surfaces are considered "un-primed" due to their mil thicknesses provided, and the common incompatibility issues with specified coating system; and are suitable only for protection during shipment and storage until incorporated into the Project.
   2) Remove dust, oil and rust.
   3) Touch up imperfections, scratches, surface damage, etc. with the appropriate primer.
   4) Field connection welds, burned and abraded portions shall be spot primed with the appropriate primer.
   5) Field apply manufacturer's written recommended primer coat over entire surface compatible with substrate finish and finish coats indicated on the paint schedule.
e. Un-primed Surfaces:
   1) Remove dust, rust, mill scale, grease and foreign matter by sand blasting or wire brushing.
   2) Surfaces to be smooth and ready to receive coatings.
f. Non-Ferrous Metal, Galvanized, Aluminum, and Copper Surfaces:
   1) Metal Etch and Solvent Clean per SSPC-SP 1 or clean with TSP or other appropriate cleaner followed by thorough water rinsing.
   2) Brush Blast to standards of SSPC-SP 16, or if blasting is not feasible, sand thoroughly, wipe clean and apply a test patch for the coating specified.
   3) Allow system to cure at least one week, then test adhesion per ASTM D 3359 “Standard Test Methods for Measuring Adhesion by Tape Test”.

7. Concrete Block Surfaces - (New and Repaint Surfaces):
   a. Interior Surfaces: MPI Interior Surface Preparation, Chapter 3, Section 3.
   b. Exterior Surfaces: MPI Exterior Surface Preparation, Chapter 2, Section 3.
   c. Clean and free of all dirt, dust, rust, oil and free from all foreign matter.
   d. Test for moisture content.
      1) Do not coat if moisture is present.
      2) Concrete Blocks to be thoroughly dry and cured prior to coating.
   e. Do not coat Masonry wall if joints are not properly pointed, has excessive mortar drippings cracked units or shows signs of excessive efflorescence.
      1) Notify Architect promptly through General Contractor.
      2) Do not coat until unsatisfactory and unacceptable Concrete Block surfaces are corrected suitable for coating.
   f. Do not apply opaque finishes to Concrete Block with airless sprayer unless "backrolled".

3.3 APPLICATION

A. Standards:
1. In accordance with MPI Painting Manual.
2. In accordance with manufacturer's specifications.

B. Method:
1. Apply by brush, roller or spray in accordance with MPI Painting Manual and the coating manufacturer's written recommendations except where specified otherwise in Schedule of Paint Finishes.
2. Painting of doors by rollers shall only be allowed only if the applicator uses a 1/4 inch nap or less roller.

C. Coatings:
1. All coatings shall be applied without reduction except as specifically required by label directions, or required to be reduced by this Specification. In such cases, reduction shall be the minimum permitted and shall not exceed VOC limits.
2. Apply each coat evenly and allow each coat to dry prior to applying succeeding coats. Each coat to have enough consistency to conceal work to which it is applied.
   a. Follow manufacturer's recommendations for recoat windows when using high performance coatings, epoxys, and urethanes.
3. Cut into a true line and leave smooth and clean without overlapping. Coat doors and windows in open position.
4. Sand finishes on smooth surfaces to assure proper adhesion of subsequent coats.
5. Tint each undercoat a lighter shade to facilitate identification of each coat, if multiple coats of same material are to be applied. Tint undercoats to match color of topcoat, but provide sufficient difference in shade of undercoats to distinguish each separate coat.
6. Apply coating systems so as to obtain not less than the dry film mil thickness recommended by the manufacturer.
7. Sand metal work only as necessary to provide for the complete bonding of coats.
8. Project Inspector to inspect and approve each coat and operation before succeeding coats are applied.
9. Finish work to be free from runs, sags, defective application and improper workmanship.
10. Back prime all woodwork and casework coming in contact with plaster, masonry or concrete immediately upon delivery to project.
11. Post sign promptly following application of coatings.

3.4 FIELD QUALITY CONTROL

A. All surfaces, preparation and paint applications shall be inspected by the Project Inspector:
1. Painted exterior and interior surfaces shall be considered to lack uniformity and soundness if any of the following defects are apparent to the Painting Inspection by the Project Inspector:
   a. Brush / Roller marks, streaks, laps, runs, sags, drips, heavy stippling, hiding or shadowing by inefficient application methods, skipped or missed areas, and foreign materials in paint coatings.
   b. Evidence of poor coverage at rivet heads, plate edges, lap joints, crevices, pockets, corners and re-entrant angles.

c. Damage due to touching before paint is sufficiently dry or any other contributory cause.
d. Damage due to application on moist surfaces or caused by inadequate protection from the weather.
e. Damage and / or contamination of paint due to blown contaminants (dust, spray paint, etc.).

2. Painted surfaces shall be considered unacceptable if any of the following are evident under natural lighting source for exterior surfaces and final lighting source (including daylight) for interior surfaces:
   a. Visible defects are evident on vertical surfaces when viewed at normal viewing angles from a distance of not less than 39 inches.
   b. Visible defects are evident on horizontal surfaces when viewed at normal viewing angles from a distance of not less than 39 inches.
   c. Visible defects are evident on ceiling, soffit and other overhead surfaces when viewed at normal viewing angles.
   d. When the final coat on any surface exhibits a lack of uniformity of color, sheen, texture, and hiding across full surface area.
3. Painted surfaces rejected by the Project Inspector shall be made good at the expense of the Contractor. Small affected areas may be touched up; large affected areas or areas without sufficient dry film thickness of paint shall be repainted. Runs, sags of damaged paint shall be removed by scraper or by sanding prior to application of paint.

3.5 CLEANING

A. Clean in accordance with Specification Section - TEMPORARY FACILITIES AND CONTROLS and PROJECT CLOSEOUT.
   1. Remove all paint where spilled, splashed, splattered or sprayed as work progresses using means and materials that are not detrimental to affected surfaces.
   2. Keep work area free from unnecessary accumulation of tools, equipment, surplus materials and debris.
   3. Remove combustible rubbish materials and empty paint cans each day and safely dispose of same in accordance with requirements of authorities having jurisdiction.
   4. Clean equipment and dispose of wash water / solvents as well as all other cleaning and protective materials (e.g., rags, drop cloths, masking papers, etc.), paints, thinners, paint removers / strippers in accordance with the safety requirements of authorities having jurisdiction in the place where the Project is located.
   5. Protect and safeguard work of other trades.

3.6 PROTECTION

A. Protection from Weather:
   1. Protect newly installed work from moisture for a period of time as recommended by the manufacturer after application.

B. Protection from Traffic:
   1. Erect barriers or screens and post signs to warn of or limit or direct traffic away or around work area as required.

C. Provide final protection and maintain conditions, in a manner acceptable to manufacturer and installer, which ensures the work of this section being without damage or deterioration until the time of Substantial Completion.

3.7 SCHEDULES

A. Refer to Exterior and Interior Finish Schedules on Drawings for applicable finishes used. This is a guide only and paint sub-contractor is responsible to check all drawings and be responsible for all paint work required to cover the complete painting and finishing of the interior and exterior including specialty items.

B. It is the intent of the specifications and drawings to cover the complete painting and finishing of the Project whether or not it is specifically called for in the Specifications, Schedule of Paint Finishes, or indicated on the Drawings. Surfaces not specified in Paint Finishes Schedule shall be in accordance with manufacturer's written recommendations.
   a. The following schedule was compliant with CARB Air Quality Standards at press time.
      1) Inform the Architect of any changes caused by stricter Air Quality Standards as part of the submittal process.
      2) Provide products compliant with CARB Air Quality Standards and Local Air Quality Control District requirements at the time of installation.

C. Exception: When the Project involves remodel work, the scope of work is limited to the remodel area and adjacent existing substrates to minimize visible color incompatibility.

D. Provide coating system minimum ODFT specified.
   1. Provide DFT per coat specified.
      a. Do not apply thicker coats than specified to achieve ODFT. Apply additional coats if necessary.
   2. "Ultra Color" Note: A fourth and/or fifth coat may be required to achieve uniform chromatic hue without ghosting from undercoat or substrate.
      a. The Contractor shall consider all Metal Paint Finishes noted "Ultra-color" as requiring as many as five (5) total coats.

E. INTERIOR PAINT FINISHES:
   1. INTERIOR WOODWORK
      a. W-1 Flat Latex Minimum ODFT 4.3 MILS.
         1) 1st Coat PVA High Hide Primer-Sealer GP 1000-1200 DFT 1.3 mils.
         2) 2nd Coat Flat Latex Velvet Sheen Finish GP 1200N DFT 1.5 mils.
         3) 3rd Coat Flat Latex Velvet Sheen Finish GP 1200N DFT 1.5 mils.
      b. W-2 Semi-Gloss Acrylic Non-Blocking Enamel Minimum ODFT 4.3 MILS.
         1) 1st Coat PVA High Hide Primer-Sealer GP 1000-1200 DFT 1.3 mils.
         2) 2nd Coat Acrylic Semi-Gloss Fin. GP 1407V DFT 1.5 mils.
         3) 3rd Coat Acrylic Semi-Gloss Fin. GP 1407V DFT 1.5 mils.
      c. W-3 Gloss Waterborne Acrylic Non-Blocking Enamel Minimum ODFT 4.3 MILS.
         1) 1st Coat PVA High Hide Primer-Sealer GP 1000-1200 DFT 1.3 mils.
         2) 2nd Coat Gloss Acrylic Finish. DEVOE 4208 DFT 1.5 mils.
         3) 3rd Coat Gloss Acrylic Finish. DEVOE 4208 DFT1.5 mils.
      d. W-4 Semi-Transparent Resin Stain Minimum ODFT 2.0 MILS.

1) 1st Coat Resin Wiping Stain GEM CRAFTSMAN DFT 1.0 mils.
2) 2nd Coat Clear Acrylic Finish GP 1808 DFT 1.0 mils.

e. W-5 Semi-Transparent Resin Stain Minimum ODFT 3.0 MILS.
1) 1st Coat Resin Wiping Stain GEM CRAFTSMAN DFT 1.0 mils.
2) 2nd Coat Clear Acrylic Finish GP 1808 DFT 1.0 mils.
3) 3rd Coat Clear Acrylic Finish GP 1808 DFT 1.0 mils.

f. W-6 Stained and Velvet Water Clear Lacquer Minimum ODFT 4.0 MILS.
1) 1st Coat Resin Wiping Stain GEM CRAFTSMAN DFT 1.0 mils.
2) 2nd Coat Lacquer Sanding Sealer GEMINI 200-0013 DFT 1.0 mils.
3) 3rd Coat Velvet Lacquer Finish GEMINI 500-0062 DFT 1.0 mil.
4) 4th Coat Velvet Lacquer Finish GEMINI 500-0062 DFT 1.0 mil.

g. W-6a: A Stained and Pre-Catalized Lacquer below which can achieve higher protection for heavily used wood doors, cabinets and trim.
1) Pre-Catalized Lacquer Minimum ODFT 4.0 MILS.
2) 1st Coat Resin Wiping Stain GEM CRAFTSMAN DFT 1.0 mils.
3) 2nd Coat Lacquer Sanding Sealer GEMINI 210-0222 DFT 1.0 mils.
4) 3rd Coat Velvet Lacquer Finish GEMINI 510-0276 DFT 1.0 mil.
5) 4th Coat Velvet Lacquer Finish GEMINI 510-0276 DFT 1.0 mil.

h. W-7 Filled and Sealed Floor Finish Minimum ODFT 3.0 MILS.
1) 1st Coat Paste Filler As recommended by Flooring Manufacturer
2) 2nd Coat Satin Varnish GP1802 DFT 1.5 mils.
3) 3rd Coat Satin Varnish GP 1802 DFT 1.5 mils.

i. W-8 Velvet Lacquered Finish Minimum ODFT 4.0 MILS.
1) 1st Coat Lacquer Sanding Sealer GEMINI 200-0027 DFT 1.0 mils.
2) 2nd Coat Velvet Lacquer Finish GEMINI 500-0082 DFT 1.0 mils.
3) 3rd Coat Velvet Lacquer Finish GEMINI 500-0082 DFT 1.0 mils.
4) 4th Coat Velvet Lacquer Finish GEMINI 500-0082 DFT 1.0 mils.

2. INTERIOR GYPSUM BOARD

a. DW-1 Flat Latex Minimum ODFT 4.3 MILS.
1) 1st Coat PVA High Hide Primer-Sealer GP 1000-1200 DFT 1.3 mils.
2) 2nd Coat Latex Velvet Sheen Flat Finish GP 1200N DFT 1.5 mils.
3) 3rd Coat Latex Velvet Sheen Flat Finish GP 1200N DFT1.5 mils.

b. DW-2 Semi-Gloss Acrylic Non-Blocking Enamel Minimum ODFT 4.3 MILS.
1) 1st Coat PVA High Hide Primer-Sealer GP 1000-1200 DFT 1.3 mils.
2) 2nd Coat Acrylic Semi-Gloss Finish GP 1407V DFT 1.5 mils.
3) 3rd Coat Acrylic Semi-Gloss Finish GP 1407V DFT 1.5 mils.

c. DW-3 Gloss Acrylic Non-Blocking Enamel Minimum ODFT 5.3 MILS.
1) 1st Coat PVA High Hide Primer-Sealer GP 1000-1200 DFT 1.3 mils.
2) 2nd Coat Acrylic Gloss Finish GP 4208 DFT 2.0 mils.
3) 3rd Coat Acrylic Gloss Finish GP 4208 DFT 2.0 mils.

d. DW-4 Gloss Epoxy Polyamide (Corrosion Resistant) Minimum ODFT 7.6 MILS.
1) 1st Coat Acrylic Primer SEAL GRIP 17-921 DFT 1.6 mils.
2) 2nd Coat Epoxy Gloss Finish AQUAPON 98-1 DFT 3.0 mils.
3) 3rd Coat Epoxy Gloss Finish AQUAPON 98-1 DFT 3.0 mils.

e. DW-4 WB Semi-Gloss Epoxy (Corrosion Resistant) Minimum ODFT 7.6 MILS.
1) 1st Coat Acrylic Primer SEAL GRIP 17-921 DFT 1.6 mils.
2) 2nd Coat Epoxy Semi-Gloss Finish PITT-GLAZE 16-510 DFT 3.0 mils.
3) 3rd Coat Epoxy Semi-Gloss Finish PITT-GLAZE 16-510 DFT 3.0 mils.

3. INTERIOR CEMENT PLASTER, VENEER PLASTER OR GYPSUM PLASTER
   a. P-1 Flat Latex Minimum ODFT 4.5 MILS.
      1) 1st Coat Acrylic Primer-Sealer GP 3210 DFT 1.5 mils.
      2) 2nd Coat Latex Velvet Sheen Flat Finish GP 1200N DFT 1.5 mils.
      3) 3rd Coat Latex Velvet Sheen Flat Finish GP 1200N DFT 1.5 mils.
   b. P-2 Semi-Gloss Acrylic Non-Blocking Enamel Minimum ODFT 5.0 MILS.
      1) 1st Coat Acrylic Primer-Sealer GP 3210 DFT 2.0 mils.
      2) 2nd Coat Acrylic Semi-Gloss Finish GP 1407V DFT 1.5 mils.
      3) 3rd Coat Acrylic Semi-Gloss Finish GP 1407V DFT 1.5 mils.
   c. P-3 Gloss Acrylic Non-Blocking Enamel Minimum ODFT 6.0 MILS.
      1) 1st Coat Acrylic Primer-Sealer GP 3210 DFT 2.0 mils.
      2) 2nd Coat Acrylic Gloss Finish GP 4208 DFT 2.0 mils.
      3) 3rd Coat Acrylic Gloss Finish GP 4208 DFT 2.0 mils.
   d. P-4 Gloss Epoxy Polyamide (Corrosion Resistant) Minimum ODFT 7.6 MILS.
      1) 1st Coat Acrylic Primer SEAL GRIP 17-921 DFT 1.6 mils.
      2) 2nd Coat Epoxy Gloss Finish AQUAPON 98-1 DFT 3.0 mils.
      3) 3rd Coat Epoxy Gloss Finish AQUAPON 98-1 DFT 3.0 mils.
   e. P-4 Water Base S/G Epoxy (Corrosion Resistant) Minimum ODFT 7.6 MILS.
      1) 1st Coat Acrylic Primer SEAL GRIP 17-921 DFT 1.6 mils.
      2) 2nd Coat WB Epoxy Semi-Gloss Fin. PITT-GLAZE 16-510 DFT 3.0 mils.
      3) 3rd Coat WB Epoxy Semi-Gloss Fin. PITT-GLAZE 16-510 DFT 3.0 mils.
4. INTERIOR CONCRETE OR CONCRETE MASONRY UNITS
   a. CB-1 Clear Water Repellent Sealer
      1) One Coat Alkyltrialkoxy Silane
         a) EVONIK DEGUSSA "Aqua-Trete®CONCENTRATE".
      2) Follow manufacturer's recommended coverage rate and installation recommendations for type of substrate to be covered.
      3) Provide manufacturer's 10 year warranty for Concrete Masonry Units and Split Faced Concrete Masonry Units.
   b. CB-2 Flat Latex - Fine Texture Minimum ODFT 9.5 MILS.
      1) 1st Coat Acrylic Block Filler GP 3010 DFT 6.5 mils.
         a) Omit at concrete surfaces.
      2) 2nd Coat Latex Velvet Sheen Flat Finish GP 1200N DFT 1.5 mils.
      3) 3rd Coat Latex Velvet Sheen Flat Finish GP 1200N DFT 1.5 mils.
   c. CB-3 Semi-Gloss Acrylic Enamel:
      1) Concrete Masonry Units: Minimum ODFT 9.5 MILS.
         a) 1st Coat Acrylic Block Filler GP 3010 DFT 6.5 mils.
         b) 2nd Coat Acrylic Semi-Gloss Finish GP 1407V DFT 1.5 mils.
         c) 3rd Coat Acrylic Semi-Gloss Finish GP 1407V DFT 1.5 mils.
      2) Concrete Surfaces: Minimum ODFT 5.0 MILS.
         a) 1st Coat Acrylic Primer-Sealer GP 3210 DFT 2.0 mils.
         b) 2nd Coat Acrylic Semi-Gloss Finish GP 1407V DFT 1.5 mils.
         c) 3rd Coat Acrylic Semi-Gloss Finish GP 1407V DFT 1.5 mils.
   d. CB-4 Color High-Gloss Polyamide Epoxy:
      1) Concrete Masonry Units: Minimum ODFT 14.6 MILS.

a) 1st Coat W/B Epoxy Block FillerSPEEDHIDE 6-15 DFT 7.0 mils.
b) 2nd Coat Acrylic Primer SEAL-GRIP 17-921 DFT 1.6 mils.
c) 3rd Coat Epoxy Gloss Finish AQUAPON 98-1 DFT 3.0 mils.
d) 4th Coat Epoxy Gloss Finish AQUAPON 98-1 DFT 3.0 mils.

2) Concrete Surfaces: Minimum ODFT 7.6 MILS.
a) 1st Coat Epoxy Primer SEAL-GRIP 17-921 DFT 1.6 mils.
b) 2nd Coat Epoxy Gloss Finish AQUAPON 98-1 DFT 3.0 mils.
c) 3rd Coat Epoxy Gloss Finish AQUAPON 98-1 DFT 3.0 mils.

e. CB-4 Color Water Base Semi-Gloss Epoxy:
1) Concrete Masonry Units: Minimum ODFT 11.6 MILS.
a) 1st Coat W/B Epoxy Block FillerSPEEDHIDE 6-15 DFT 7.0 mils.
b) 2nd Coat Epoxy Primer SEAL-GRIP 17-921 DFT 1.6 mils.
c) 3rd Coat Epoxy S/G Finish PITT-GLAZE 16-510 DFT 1.5 mils.
d) 4th Coat Epoxy S/G Finish PITT-GLAZE 16-510 DFT 1.5 mils.

2) Concrete Surfaces: Minimum ODFT 4.6 MILS.
a) 1st Coat Epoxy Primer SEAL-GRIP 17-921 DFT 1.6 mils.
b) 2nd Coat Epoxy S/G Finish PITT-GLAZE 16-510 DFT 1.5 mils.
c) 3rd Coat Epoxy S/G Finish PITT-GLAZE 16-510 DFT 1.5 mils.

f. CB-5 Clear High-Gloss Polyamide Epoxy Minimum ODFT 5.0 MILS.
1) 1st Coat Epoxy Gloss Fin. MONOPOLE Permashield 200 DFT 2.5 mils.
2) 2nd Coat Epoxy Gloss Fin. MONOPOLE Permashield 200 DFT 2.5 mils.

5. INTERIOR METALS
a. PRIMER NOTE: Metals that are shop primed shall be considered “un-primed” and shall be primed with appropriate primer and thicknesses listed below:
1) Ferrous Metal:
a) DEVOE 4020 "Red" Multi-Purpose Metal Primer DFT 3.0 mils.
2) Non-Ferrous Metal, Galvanized Metal or Aluminum:
a) DEVOE 4020 "White" Multi-Purpose Metal Primer DFT 3.0 mils.

b. COIL-COATED PRODUCTS NOTE: Metal products primed with coil-coated products are to be assumed to be “un-primed” products and shall be additionally coated (or primed again) as follows:
1) Coil-Coated Products:
a) Field apply manufacturer's recommended primer coat and mil thickness over entire surface compatible with substrate finish and finish coats indicated on paint schedule.

c. M-1 Flat Latex Minimum ODFT 6.0 MILS.
1) 1st Coat Primer See primer note above.
2) 2nd Coat Latex Velvet Sheen Flat Finish GP 1200N DFT 1.5 mils.
3) 3rd Coat Latex Velvet Sheen Flat Finish GP 1200N DFT 1.5 mils.

d. M-2 Semi-Gloss "Ultra Color" Industrial Acrylic Minimum ODFT 7.0 MILS.
1) 1st Coat Primer See primer note above.
2) 2nd Coat Acrylic Semi-Gloss Finish DEVOE 4216 DFT 2.0 mils.
3) 3rd Coat Acrylic Semi-Gloss Finish DEVOE 4216 DFT 2.0 mils.

e. M-3 Gloss "Ultra Color" Waterborne Acrylic Minimum ODFT 7.0 MILS.

1) 1st Coat Primer See primer note above.
2) 2nd Coat Gloss Acrylic Finish DEVOE 4208 DFT 2.0 mils.
3) 3rd Coat Gloss Acrylic Finish DEVOE 4208 DFT 2.0 mils.

f. M-4 Semi-Gloss Epoxy Polyamide Minimum ODFT 6.0 MILS.
1) 1st Coat Satin Epoxy Primer PITT-GLAZE 90-712 DFT 3.0 mils.
2) 2nd Coat Epoxy Semi-Gloss Finish PITT-GLAZE 16-510 DFT 1.5 mils.
3) 3rd Coat Epoxy Semi-Gloss Finish PITT-GLAZE 16-510 DFT 1.5 mils.

g. M-5 Gloss Epoxy Polyamide Minimum ODFT 9.0 MILS.
1) 1st Coat Satin Epoxy Primer PITT-GLAZE 90-712 DFT 3.0 mils.
2) 2nd Coat Epoxy Gloss Finish AQUAPON 98-1 3.0 mils.
3) 3rd Coat Epoxy Gloss Finish AQUAPON 98-1 3.0 mils.

h. M-5 Water Base S/G Epoxy (Corrosion Resistant) Minimum ODFT 7.6 MILS.
1) 1st Coat Acrylic Primer SEAL GRIP 17-921 DFT 1.6 mils.
2) 2nd Coat WB Epoxy S/G Fin. PITT-GLAZE 16-510 DFT 3.0 mils.
3) 3rd Coat WB Epoxy S/G Fin. PITT-GLAZE 16-510 DFT 3.0 mils.

i. M-6 Flat Waterborne Paint Minimum ODFT 3.0 MILS.
1) 1st Coat Waterborne Flat Dry Fall Prime GP 1280 DFT 1.5 mils.
2) 2nd Coat Waterborne Flat Dry Fall Finish GP 1280 DFT 1.5 mils.

j. M-7 Semi-Gloss Waterborne Paint Minimum ODFT 3.0 MILS.
1) 1st Coat Waterborne Semi-Gloss Dry Fall Primer GP 1486 DFT 1.5 mils.
2) 2nd Coat Waterborne Semi-Gloss Dry Fall Finish GP 1486 DFT 1.5 mils.

6. INTERIOR ACOUSTICAL TILE

a. A-1 Matte Flat Vinyl Acrylic Minimum ODFT 1.2 MILS.
1) 1st Coat Vinyl Acrylic Matte Flat Fin. GP 1251 DFT 1.2 mils.

F. EXTERIOR PAINT FINISHES

1. EXTERIOR WOOD

a. EW-1 Flat 100 percent Acrylic Minimum ODFT 4.5 MILS.
1) 1st Coat 100 percent Acrylic Primer-Sealer GP 6001 DFT 1.5 mils.
2) 2nd Coat 100 percent Acrylic Flat Finish GP 2200V DFT 1.5 mils.
3) 3rd Coat 100 percent Acrylic Flat Finish GP 2200V DFT 1.5 mils.

b. EW-2 Semi-Gloss percent Acrylic Minimum ODFT 4.5 MILS.
1) 1st Coat 100 percent Acrylic Primer-Sealer GP 6001 DFT 1.5 mils.
2) 2nd Coat 100 percent Acrylic Semi-Gloss GP 2406V DFT 1.5 mils.
3) 3rd Coat 100 percent Acrylic Semi-Gloss GP 2406V DFT 1.5 mils.

c. EW-3 100 percent Acrylic Resin (A/R) Stain Minimum ODFT 3.0 MILS.
1) 1st Coat 100 percent A/R Stain Coat FLOOD SWF DFT 1.5 mils.
2) 2nd Coat 100 percent A/R Stain Coat FLOOD SWF DFT 1.5 mils.

2. EXTERIOR SOFFIT BOARD

a. ESB-1 Lo-Sheen 100 percent Acrylic Resin (A/R)-Heavy StippleMinimum ODFT 19.0 MILS.
1) 1st Coat 100 percent Acrylic Primer-Sealer GP 6001 DFT 1.5 mils.
2) 2nd Coat* 100 percent A/R Heavy Stipple GP 2290 DFT 15.0 mils.
3) 3rd Coat: 100 percent A/R Lo Sheen GP 2402V DFT 1.5 mils.
4) *Note: 2nd Coat to have medium size aggregate added to achieve heavy stipple texture.

3. EXTERIOR CEMENT PLASTER

a. EP-1 Flat 100 percent Acrylic Minimum ODFT 4.5 MILS.
1) 1st Coat 100 percent Acrylic Primer-Sealer GP 6001 DFT 1.5 mils.
2) 2nd Coat 100 percent Acrylic Flat Finish GP 2200V DFT 1.5 mils.

3) 3rd Coat 100 percent Acrylic Flat Finish GP 2200V DFT 1.5 mils.

b. EP-2 Semi-Gloss 100 percent Acrylic Minimum ODFT 9.5 MILS.
   1) 1st Coat 100 percent Acrylic Primer-Sealer GP 6001 DFT 1.5 mils.
   2) 2nd Coat 100 percent Acrylic Semi-Gloss Finish GP 2406V DFT 4.0 mils.
   3) 3rd Coat 100 percent Acrylic Semi-Gloss Finish GP 2406V DFT 4.0 mils.

c. EP-3 Gloss Acrylic Minimum ODFT 9.5 MILS.
   1) 1st Coat 100 percent Acrylic Primer-Sealer GP 6001 DFT 1.5 mils.
   2) 2nd Coat Gloss Acrylic Finish DEVOE 4208 DFT 4.0 mils.
   3) 3rd Coat Gloss Acrylic Finish DEVOE 4208 DFT 4.0 mils.

d. EP-4 Smooth Elastomeric, Lo Sheen Acrylic/Resin (A/R) - Minimum ODFT 18 MILS.
   1) 1st Coat 100 percent Acrylic Primer-Sealer GP 6001 DFT 1.5 mils.
   2) 2nd Coat Smooth Elastomeric Finish GP 2260 DFT 15.0 mils.
      a) Spray and Backroll
   3) 3rd Coat 100 percent Acrylic Resin Satin Finish GP 2402V DFT 1.5 mils.

e. EP-5 Sand Float Elastomeric, S/G Acrylic/Resin (A/R) - Minimum ODFT 18 MILS.
   1) 1st Coat 100 percent Acrylic Primer-Sealer GP 6001 DFT 1.5 mils.
   2) 2nd Coat Sand Float Elastomeric Finish GP 2270 DFT 15.0 mils.
      a) Spray and Backroll
   3) 3rd Coat 100 percent Acrylic S/G Finish GP 2406 DFT 1.5 mils.

f. EP-6 Coarse Elastomeric, S/G Acrylic/Resin (A/R) Minimum ODFT 18.0 MILS.
   1) 1st Coat 100 percent Acrylic Primer-Sealer GP 6001 DFT 1.5 mils.
   2) 2nd Coat Elastomeric Finish GP 2290 DFT 15.0 mils.
      a) Spray and Backroll
   3) 3rd Coat 100 percent Acrylic S/G Finish GP 2406V DFT 1.5 mils.

4. EXTERIOR CONCRETE OR CONCRETE MASONRY UNITS:

a. ECB-1 Clear Water Repellent Sealer:
   1) One Coat Alkyltrialkoxy Silane:
      a) EVONIK DEGUSSA "Aqua-Trete® CONCENTRATE"
   2) Provide manufacturer's 10 year warranty for Concrete Masonry Units and Split Faced Concrete Masonry Units.

b. ECB-2 Flat 100 percent Acrylic Minimum ODFT 9.5 MILS.
   1) 1st Coat Acrylic Block Filler GP 3010 DFT 6.5 mils.
      a) Omit at concrete surfaces
   2) 2nd Coat 100 percent Acrylic Flat Finish GP 2200V DFT 1.5 mils.
   3) 3rd Coat 100 percent Acrylic Flat Finish GP 2200V DFT 1.5 mils.

c. ECB-3 Flat 100 percent Acrylic Minimum ODFT 4.5 MILS.
   1) 1st Coat 100 percent Acrylic Primer-Sealer GP 6001 DFT 1.5 mils.
   2) 2nd Coat 100 percent Acrylic Flat Finish GP 2200V DFT 1.5 mils.
   3) 3rd Coat 100 percent Acrylic Flat Finish GP 2200V DFT 1.5 mils.

5. EXTERIOR METAL

a. PRIMER NOTE: Metals shop primed shall be considered “un-primed” and shall be primed with appropriate primer and thicknesses listed below:
   1) Ferrous Metal, Type 1 Typical:
      a) DEVOE 4020 "Red" Multi-Purpose Metal primer DFT 3.0 mils.
   2) Ferrous Metal, Type 2 as specified in Specification Section – STEEL AND FABRICATIONS:

a) DIMETCOAT 302H Reinforced Inorganic Zinc-Rich Urethane Metal Primer DFT 3.0 mils.

3) Ferrous Metal, Type 3 when Urethane is used as a finish.

a) AMERLOCK 2VOC/400 VOC Epoxy Metal Primer DFT 6.0 mils.

4) Non-Ferrous Metal, Type 4 Galvanized Metal or Aluminum

a) DEVOE 4020 "White" Multi- Purpose Metal Primer DFT 3.0 mils.

5) Non-Ferrous Metal, Type 5 Galvanized Metal or Aluminum, when Urethane is used as a finish.

a) AMERLOCK 2VOC/400 VOC Epoxy Metal Primer DFT 6.0 mils.

b. COIL-COATED PRODUCTS NOTE: Metal products primed with coil-coated products are to be assumed to be unprimed products and shall be re-primed as follows:

1) Coil-Coated Products:

a) Field apply manufacturer's recommended primer coat and mil thickness over entire surface compatible with substrate finish and finish coats indicated on paint schedule.

c. <u>EM-1 Flat 100 percent Acrylic Minimum ODFT 6.0 MILS.</u>

1) 1st Coat Primer See primer note above.
2) 2nd Coat 100 percent Acrylic Flat Finish GP 2200V DFT 1.5 mils.
3) 3rd Coat 100 percent Acrylic Flat Finish GP 2200V DFT 1.5 mils.

d. <u>EM-2 Semi-Gloss "Ultra Color" 100 percent Acrylic Minimum ODFT 7.0 MILS.</u>

1) 1st Coat Primer See primer note above.
2) 2nd Coat 100 percent Acrylic Semi-Gloss Finish GP 2406V DFT 2.0 mils.
3) 3rd Coat 100 percent Acrylic Semi-Gloss Finish GP 2406V DFT 2.0 mils.

e. <u>EM-3 Gloss "Ultra Color" 100 percent Acrylic WaterborneMinimum ODFT 7.0 MILS.</u>

1) 1st Coat Primer See primer note above.
2) 2nd Coat Gloss Acrylic Finish DEVOE 4208 DFT 2.0 mils.
3) 3rd Coat Gloss Acrylic Finish DEVOE 4208 DFT 2.0 mils.

f. <u>EM-4 Gloss "Ultra Color" Aliphatic Acrylic Urethane (A/A/U) Finish, Spray Applied, Deep Tone, Custom Color Minimum ODFT 16.0 MILS.</u>

1) 1st Coat Primer See primer note above.
2) 2nd Coat A/A/U Gloss Color Finish AMERSHIELD VOC DFT 5.0 mils.
3) 3rd Coat A/A/U Gloss Color Finish AMERSHIELD VOC DFT 5.0 mils.

g. <u>EM-5 Gloss "Ultra Color" Aliphatic High Solids Finish, Spray Applied, Deep Tone, Custom Color with clear protective coats Minimum ODFT 18.0 MILS.</u>

1) 1st Coat Primer See primer note above
2) 2nd Coat A/A/U Gloss Color Finish AMERSHIELD VOC DFT 3.0 mils.
3) 3rd Coat A/A/U Gloss Color Finish AMERSHIELD VOC DFT 3.0 mils.
4) 4th Coat A/A/U Gloss Clear Finish AMERSHIELD VOC DFT 3.0 mils.
5) 5th Coat A/A/U Gloss Clear Finish AMERSHIELD VOC DFT 3.0 mils.

h. <u>EM-6 Semi-Gloss "Ultra Color" Aliphatic Urethane (A/U) Finish, Spray Applied, Deep Tone, Custom Color Finish Minimum ODFT 16.0 MILS.</u>

1) 1st Coat Primer See primer note above.
2) 2nd Coat A/A/U Semi-Gloss AMERCOAT 450HSG A/U DFT 5.0 mils.
3) 3rd Coat A/A/U Semi-Gloss AMERCOAT 450HSG A/U DFT 5.0 mils.

G.

H.

I. SPECIALTY PAINT FINISHES:
1. PROVIDE SPECIALTY PAINT FINISHES AS SHOWN OR AS FOLLOWS:
a. Finish No. X-1: Minimum ODFT 15.0 MILS.
1) Lines on Concrete or Asphaltic Concrete Paving - 10" width lines, maximum. Reflectorize as required:
2) Traffic Paint ENNIS-FLINT High Build Fast-Dry WaterborneTraffic Paint DFT 15.0 mils.
b. Finish No. X-2: Minimum ODFT 15.0 MILS.
1) Lines on Walk Top. Colors as selected by Architect:
2) Line Paint ENNIS-FLINT High Build Fast-Dry Waterborne Traffic Paint DFT 15.0 mils.
c. Finish No. X-3: Minimum ODFT 1.5 MILS.
1) Space above Vents or Grilles:
2) 1st Coat 100 percent Acrylic Flat Black GP 2200V DFT 1.5 mils.
d. Finish No. X-4: Minimum ODFT 4.0 MILS.
1) Piping Black Steel or Cast Iron:
2) 1st Coat Multi-Purpose Metal Primer:
a) DEVOE 4020 "Red" DFT 2.0 mils.
3) 2nd Coat Acrylic Gloss Finish GP 2406V DFT 2.0 mils.
e. Finish No. X-5: Minimum ODFT 5.0 MILS.
1) Piping Galvanized:
2) 1st Coat General Purpose Metal Primer:
a) DEVOE 4020 "White" DFT 3.0 mils.
3) 2nd Coat Gloss Enamel Finish:
a) DEVOE 4208 DFT 2.0 mils.
f. Finish No. X-6: Minimum ODFT 7.0 MILS.
1) Machinery and Equipment (Coil Coated Products):
2) 1st Coat General Purpose Metal Primer:
a) DEVOE 4020 "White" DFT 3.0 mils.
3) 2nd Coat Gloss Enamel Finish DEVOE 4208 DFT 2.0 mils.
4) 3rd Coat Gloss Enamel Finish DEVOE 4208 DFT 2.0 mils.
g. Finish No. X-7: Minimum ODFT 5.0 MILS.
1) Sheet Metal Ducts:
2) 1st Coat General Purpose Metal Primer:
a) DEVOE 4020 "White" DFT 3.0 mils.
3) 2nd Coat Gloss Enamel Finish DEVOE 4208 DFT 2.0 mils.
h. Finish No. X-8: Minimum ODFT 5.0 MILS.
1) Fire Hydrants:
2) 1st Coat General Purpose Metal Primer
a) DEVOE 4020 "White" DFT 3.0 mils.
3) 2nd Coat Gloss Enamel Finish DEVOE 4208 DFT 2.0 mils.
i. Finish No. X-9: Minimum ODFT 6.0 MILS.

1) Following items listed will receive Finish No. X-9 (including, but not limited to), Louvers, Grilles, or Access Panels:
2) 1st Coat General Purpose Metal Primer:
   a) DEVOE 4020 "White" DFT 2.0 mils.
3) 2nd Coat 100 percent Acrylic Flat Fin. GP 2200V DFT 1.5 mils.
4) 3rd Coat 100 percent Acrylic Flat Fin. GP 2200V DFT 1.5 mils.

j. Finish No. X-10: Minimum ODFT 1.5 MILS.
1) Striping under Acoustical Board Surrounding Structure:
2) 1st Coat 100 percent Acrylic Flat Black GP 2200V DFT 1.5 mils.

k. Finish No. X-11: Minimum ODFT 1.5 MILS.
1) Acoustical Board and Exposed Striping and Structural:
2) 1st Coat 100 percent Acrylic Flat Black GP 2200V DFT 1.5 mils.

l. Finish No. X-12:
1) Minimum ODFT as recommended by graffiti coating manufacturer.
2) Graffiti Coating, non-toxic, liquid, sacrificial wax-based Coating:
3) 1st Coat Graffiti Coating:
   a) Graffiti-Pruf by VISUAL POLUTION TECH, INC.
4) 2nd Coat Graffiti Coating:
   a) Only if recommended by manufacturer for substrate material type.
   b) Graffiti-Pruf by VISUAL POLUTION TECH, INC.

m. Finish No. X-13 (NOT APPLICABLE ANYMORE):

n. Finish No. X-14 (NOT APPLICABLE ANYMORE):

o. Finish No. X-15:
1) Clear Graffiti Coating, non-toxic, liquid, multi-polymer, non-sacrificial, single component sealer by BASF, or approved equivalent: One Coat
   a) **NOTE #1:** Test a small area of the existing substrate in an out-of-the-way spot, as determined by the Architect, for compatibility. Inform the Architect if an incompatibility is found for further direction. If found to be compatible, proceed as follows:
2) 1st Coat Clear, flat matte coat TAGGUARD by BASF
   a) **NOTE #2**: Follow manufacturer's recommendations for proper installation over various substrates. Applicator must be certified by the manufacturer as an approved applicator for this product over various substrate materials. Protect at least 24 hours minimum the treated surface until manufacturer's recommended curing time has been achieved against graffiti.
3) REMOVAL COAT: TAGGUARD Cleaner
   a) **NOTE #3:** Provide remover in small containers equal to 8-16 oz. containers of material for the Owner's use. Instruct the designated representative of the Owner as to proper application of the remover, and all procedures for removing graffiti.

p. Finish No. X-16: Non-sacraficial, aqueous, silane chemistry, ready-to-use, zero VOC high performance anti-graffiti treatment for masonry, concrete and natural stone, dries clear and will not yellow.
1) Follow manufacturer's printed recommendations prior to use.
2) Do not apply to wet surfaces. If surface is wet, let dry for a minimu of 24 hours prior to application. Do not use if temperature is below 40 degrees F or above 100 degrees F.
3) Protect non-porous surface substrates from overspray. Always do a test patch to confirm the treatment before using to deterimine if there is any problems prior to full coverage of the porous surfaces.

4) Concrete shall be allowed to cure a minimum of 28 days. All pointing or re-pointing shall be completed and allowed to cure for at least 3 days prior to coverage. All patching materials, caulking, sealing materials and traffic paint shall be fully cured before application.
5) 1st Coat Clear, flat matte coat PROTECTOSIL ANTIGRAFFITI
   a) 175 to 250 sq. ft. per gallon, diluted by 14 parts of water, using a 1" nap roller.
6) 2nd Coat Clear, flat matte coat PROTECTOSIL ANTIGRAFFITI
   a) 175 to 250 sq. ft. per gallon, un-diluted, using a 1" nap roller.
7) 3rd Coat Clear, flat matte coat PROTECTOSIL ANTIGRAFFITI
   a) 175 to 250 sq. ft. per gallon, un-diluted, using a 1" nap roller.
   b) 3rd Coat shall always be figured in as part of the Base Bid. 3rd Coat may be deleted if it is determined by all concerned that the two coats were sufficient to protect the surfaces. If not needed, then figure on a credit back to the Owner.
8) Most graffiti removal can be achieved with standard non-hazardous cleaners and low-pressure waterblasting. Contact manufacturer for stubborn markings for removal.

q. Finish No. X-17: Non-sacraficial, 100 percent active silane treatment with oleophobic additive, clear penetrating breathable VOC Compliant (400 g/L) surface treatment for use on concrete, brick masonry, concrete masonry units and natural stone.
1) For flat (horizontal) concrete walks.
   a) Manufacturer's printed recommendations for rate of coverage, and type of application method to protect porous surfaces from graffiti and for ease of walk-way clean-up.
   b) Follow manufacturer's printed recommendations prior to use.
   c) Do not apply to wet surfaces. If surface is wet, let dry for a minimu of 24 hours prior to application. Do not use if temperature is below 40 degrees F or above 100 degrees F.
   d) Protect non-porous surface substrates from overspray. Always do a test patch to confirm the treatment before using to deterimine if there is any problems prior to full coverage of the porous surfaces.
   e) Concrete surfaces shall be allowed to cure a minimum of 28 days. All pointing or re-pointing shall be completed and allowed to cure for at least 3 days prior to coverage. All patching materials, caulking, sealing materials and paint shall be fully cured before application.
2) 1st Coat Clear, flat matte coat PROTECTOSIL BHN PLUS

r. Finish No. X-18: Non-sacraficial, Graffiti Coating, non-toxic, liquid, semi-permanent, acrylic based Coating - Minimum ODFT as recommended by graffiti coating manufacturer.
1) For application on sealed surface, including but not limited to CMU scheduled to be sealed, verify compatibility with sealer manufacturer prior to application of Sealer.
   a) Only if recommended by manufacturer for substrate material type.
   b) For application on natural porous surface, thin first coat with 40 percent water. All other coats shall be full strength.
2) 1st Coat Graffiti Coating TSW4
3) 2nd Coat Graffiti Coating TSW4
4) 3rd Coat Graffiti Coating TSW4
5) 4th Coat Graffiti Coating TSW4

6) Provide Manufacturer's recommended TSW2G Graffiti Removal Kit.

s. Finish No. X-19: "Ceramic Carpet" Flooring System

1) Fresno Unified School District Standard.
2) Surface Preparation:
   a) Refer to Specification Section - VAPOR ALKALINITY CONTROL and manufacturer's written instructions.
   b) Provide shot-blasted or mechanically abraded surfaces (CSP-4-9).
   c) Prepare any metal substrates per SSPC-SP10 "Near White Metal".
   d) Threshold preparation: Key in material for flush transition.
3) SHERWIN WILLIAMS / General Polymers, 1/4" Thick "Ceramic Carpet" Flooring System:
   a) 1st Coat - Primer: SHERWIN WILLIAMS GP3477 Epoxy Water Emulsion Primer / Sealer (Part A and Part B).
   b) 2nd Coat - Slurry: SHERWIN WILLIAMS Fastop Urethane Slurry 12S-GP4080 with 55lbs GP 5080 aggregate per 1.8-gallon kit. Applied at 3/16, 5900F aggregate broadcast to excess approx. 0.6 lbs. per sq. ft.
   c) 3rd Coat - Broadcast Alum Oxide: SHERWIN WILLIAMS GP 3744 applied at 100 sq ft per gallon with 5900F aggregate broadcast to excess approx. 0.6 lbs. per sq. ft.
   d) 4th Coat - Grout Coat: GP 3744 applied at 100 sq. ft per gallon.
   e) 5th Coat - Finish Coat: GP 3744 applied at 100 sq. ft per gallon
4) Coved Bases: Extend the "Ceramic Carpet" Flooring System up the coved base, to an extent 6" minimum above the finish floor. Terminate the cove material at an existing grout joint, or at the top of the coved wall base.

END OF SECTION

INTENTIONALLY LEFT BLANK

SECTION 100500 – MISCELLANEOUS SPECIALTIES

PART 1 - GENERAL

1.1 SUMMARY

A. This Section includes the following:
   1. Provision for and installation of specialty and built-in items required for this Work as indicated on the Drawings.

B. Related Sections: The following Sections contain requirements that relate to this Section:
   1. ALL DIVISION 00 SPECIFICATION SECTIONS.
   2. ALL DIVISION 01 SPECIFICATION SECTIONS.
   3. 03 30 00 CAST-IN-PLACE CONCRETE
   4. 04 22 00 CONCRETE MASONRY UNITS
   5. 05 12 00 STEEL AND FABRICATIONS
   6. 05 30 00 METAL DECK
   7. 06 10 00 ROUGH CARPENTRY
   8. 06 41 23 MODULAR CASEWORK
   9. 07 60 00 SHEET METAL
   10. 08 11 10 METAL DOORS AND FRAMES
   11. 08 80 00 GLASS
   12. 09 24 00 CEMENT PLASTER
   13. 09 29 00 GYPSUM BOARD
   14. 09 50 00 ACOUSTICAL CEILINGS
   15. 09 65 10 RESILIENT BASE AND ACCESSORIES
   16. 09 65 16 RESILIENT SHEET
   17. 09 72 00 WALL COVERINGS
   18. 09 91 00 PAINTING
   19. ALL SPECIFICATION SECTIONS IN THE FACILITY SERVICES SUBGROUP.
   20. ALL SPECIFICATION SECTIONS IN THE SITE AND INFRASTRUCTURE SUBGROUP.

1.2 SYSTEM DESCRIPTION

A. Performance Requirements: It is the intention of this section and the drawings to form a guide for a complete and operable system of all products or systems listed within this specification section. Any items not specifically noted but necessary for a complete and operable product or system shall be provided under this section.

1.3 SUBMITTALS

A. Submit in accordance with Specification Section - SUBMITTAL PROCEDURES:
   1. Shop Drawings:
      a. Submit Shop Drawings and catalog cuts to the architect showing all details of installation and assembly and all requirements for work by other trades.
   2. Product Data:

a. Submit manufacturer's full color range (including any standard, premium and custom colors) for selection by the Architect.

1.4 DELIVERY, STORAGE, AND HANDLING

A. Storage and protection:
1. Use all means necessary to protect all specialty items before, during and after installation and to protect the installed work and materials of all other trades.

B. Replacements:
1. In the event of damage, immediately make all repairs and replacements necessary to the approval of the Architect at no additional cost to the Owner.

1.5 PROJECT CONDITIONS

A. Existing Conditions:
1. Surface Conditions:
a. Coordination: Coordinate with all other trades as required to ensure proper and adequate provision in framing and wall finish for the installation of the selected specialties in the locations required.
2. Inspection:
a. Prior to Installation, inspect all specific locations and verify that all necessary provisions have been made.
b. In the event of discrepancy, immediately notify the Architect.
c. Do not proceed with installation in areas of discrepancy until all such discrepancies have been fully resolved.

1.6 WARRANTY

A. Contractor's General Warranty:
1. In accordance with Specification Section - WARRANTIES.

B. Manufacturer’s Warranty:
1. In accordance with manufacturer's written standard warranty:
a. Warranty Period One (1) Year.

C. Installer's Warranty:
1. In accordance with the terms of the Specification Section - WARRANTIES:
a. Warranty period One (1) Year.

PART 2 - PRODUCTS

NOT APPLICABLE

PART 3 - EXECUTION

3.1 INSTALLATION

A. Install all specialty items where indicated on the Drawings and in full accordance with all pertinent regulations and the manufacturer's written recommendations, anchoring all components firmly in place for long life under hard use, and in accordance with IR (Interpretation of Regulations, “Division of the State Architect”) Manual.

3.2 ADJUSTING

A. Upon completion of the installation, and as a condition of its acceptance, visually inspect the entire work of this Section, adjust all components for proper alignment and use, and touch up all abrasions and scratches to make them completely invisible.

3.3 SCHEDULES

A. All items shall be as scheduled or approved equivalent items as set forth in the Substitution Section of these specifications, and all provisions of Division 00 - GENERAL CONDITIONS, and the sections of Division 01.

B. Dimensional Letters:
   1. "Cut and Fabricated Letters":
      a. Provide and install, where shown on the drawings, Dimensional Letters as manufactured by SPANJER SIGN COMPANY, INC., or approved equivalent.
         1) Dimensional Letters shall be fabricated from Steel 18-gage "Cut and Fabricated" letters and 22-gage backer plate.
         2) Letter style shall be a "Cut and Fabricated" 12" high by 1" thick Helvetica Medium with 1-3/8" stroke.
         3) Letters shall have straight edges and buckle free faces.
         4) Finish: As indicated on Drawings.
      b. Letters shall be mounted with stud and spacer for 1/2" clearance.
      c. Coordinate solid wood backing at location receiving Dimensional Letters.
         1) Submit a sample Dimensional Letter and mounting device in the finish selected. Approval by the Architect is required prior to fabrication and installation of all other letters. Sample, upon approval of the Architect, may be incorporated into the work.
   2. Pencil Sharpener:
      a. Provide and install, where shown on the drawings, Pencil Sharpeners as manufactured by X-ACTO or approved equivalent.
         1) KS Manual Pencil Sharpener.
      b. Pencil Sharpener shall be mounted on 1/2" solid wood backing with rounded edges.

END OF SECTION

INTENTIONALLY LEFT BLANK

SECTION 101100 – VISUAL DISPLAY BOARDS

PART 1 - GENERAL

1.1 SUMMARY

A. This Section includes the following:
   1. Provide all material, labor, equipment and services necessary to furnish and install Visual display boards and Tackboards, Accessories and other related items necessary to complete the Project as indicated by the Contract Documents unless specifically excluded.

B. Related Sections: The following Sections contain requirements that relate to this Section:
   1. ALL DIVISION 00 SPECIFICATION SECTIONS.
   2. ALL DIVISION 01 SPECIFICATION SECTIONS.
   3. 04 22 00 CONCRETE MASONRY UNITS
   4. 05 12 00 STEEL AND FABRICATIONS
   5. 06 10 00 ROUGH CARPENTRY
   6. 09 24 00 CEMENT PLASTER
   7. 09 29 00 GYPSUM BOARD
   8. 09 72 00 WALL COVERINGS
   9. ALL SPECIFICATION SECTIONS IN THE FACILITY SERVICES SUBGROUP.
   10. ALL SPECIFICATION SECTIONS IN THE SITE AND INFRASTRUCTURE SUBGROUP.

1.2 SUBMITTALS

A. Submit in accordance with Specification Section - SUBMITTAL PROCEDURES:
   1. Samples:
      a. Submit one sample each of Manufacturer's standard finish colors (including standard, premium and custom colors).

1.3 QUALITY ASSURANCE

A. Regulatory Requirements:
   1. In accordance with Specification Section Regulatory Requirements, and the following:
      a. CARB Materials and equipment used for this Project shall comply with the current applicable regulations of the California Air Resources Board (CARB) and the Environmental Protection Agency (EPA), in the area where the project is located.
      b. AIES American and Illuminating Engineering Society.

1.4 WARRANTY

A. Contractor's General Warranty:
   1. In accordance with Specification Section - WARRANTIES.

B. Manufacturer’s Warranty:
1. In accordance with manufacturer's written standard warranty:
a. Warranty Period One (1) Year.

C. Installer's Warranty:
1. In accordance with the terms of the Specification Section - WARRANTIES:
a. Warranty period One (1) Year.

PART 2 - PRODUCTS

2.1 MANUFACTURERS

A. Products specified are from companies listed below, or approved equivalent. These products listed herein establish the size, pattern, color range and function selected by the Architect for this Project. Manufacturers listed as acceptable alternative manufacturers must still comply with the requirements of the products listed in order to be approved as an equivalent during the Submittal Process. If the acceptable alternative manufacturers listed are not approved during the Submittal Process due to non-compliance with the contract documents, then the Contractor shall submit product specified.
1. Specified product manufacturer, or approved equivalent:
a. CLARIDGE PRODUCTS AND EQUIPMENT.
b. Acceptable alternative manufacturers:
1) AARCO PRODUCTS, INC.
2) PLATINUM VISUAL SYSTEMS
a) An ABC SCHOOL EQUIPMENT INC.

B. Products from other manufacturers not listed must submit in accordance with Specification Section - SUBSTITUTION PROCEDURES

2.2 MATERIALS

A. Liquid Marker Boards:
1. Aluminum Framed:
a. Facing Sheet: 24 gage Porcelain Enamel Steel for Liquid Marker Boards. "LCS" face sheet by CLARIDGE is an approved0 equivalent to the coating process itemized below.
1) Exposed face to be three coat process of manufacturer's primer and ground coat.
2) Concealed face to be two coat process of manufacturer's primer and ground coat.
3) Fuse cover and ground coats to steel at the manufacturer's standard firing temperatures, but not less than 1200 degrees F.
b. Core: 1/2 inch (minimum) particleboard complying with ANSI A 208.1, Grade 1-M-1, with manufacturer's standard 0.005 inch thick aluminum foil backing.
c. Exposed Face Color: As selected from manufacturer's full color range of light-colored special writing surface with gloss finish intended for use with felt-tipped markers.

d. Adhesive: Manufacturer's written recommended standard moisture-resistant thermoplastic-type adhesive.

B. Hardware:

1. General: Fabricate frames and trim of not less than 0.062 inch thick 6063T-5 aluminum alloy, clear anodized finish, size and shape as indicated to suit type of installation. Provide straight, single-length units, keep joints to a minimum. Miter corners to a neat, hairline closure.
   a. Chalk Rail: 1/8 inch extruded shape as standard with the manufacturer
   b. Joint Cover: 1/16 inch extruded "H" or "T" shapes.
   c. Map Rail: 1/16 inch extruded shape as standard with the manufacturer with End Stops.
   d. Flag Holder: Provide one per map rail.
   e. Map Rail Hooks: 24 gage steel, cadmium plated hooks at 24 inches on center with spring holder clips and laminated vinyl cork insert.
   f. Wall Clips Manufacturer's standard concealed support clips.
   g. Marker Trough: 1/8 inch extruded shape as standard with the manufacturer
   h. Trim: 3/32 inch extruded angles or channels.

2.3 FABRICATION

A. Laminate facing sheet and backing sheet to core material under pressure with manufacturer's written recommended flexible, waterproof adhesive.

B. Assembly: Provide factory-assembled visual display board units except where filed-assembled units are required.

1. Make joints only where total length exceeds maximum manufactured length. Fabricate with the minimum number of joints, balanced around the center of ht board, as acceptable to the Architect.
2. Provide the manufacturer's standard vertical joint system between abutting sections of display boards.

C. Minimum lengths shall be 16 feet, in one piece, or as indicated on Drawings.

D. Fabricate "Horizontal Sliding Markerboards" as indicated on the drawings in accordance with manufacturer's written recommendations.

2.4 FINISHES

A. Comply with NAAMM "Metal Finishes Manual" for recommendations relative to application and designations of finishes.

PART 3 - EXECUTION

3.1 INSTALLATION

A. Deliver factory-built visual display board units completely assembled in one piece without joints, wherever possible. Where dimensions exceed panel size, provide 2 or more pieces of equal length as acceptable to the Architect. When overall dimensions require delivery in separate units, prefit components at the factory, disassemble for delivery, and make final joints at the site. Use splines at joints to maintain surface alignment.

B. Install units in locations and at mounting heights indicated and in accordance with the manufacturer's written instructions. Keep perimeter lines straight, plumb, and level. Provide grounds, clips, backing materials, adhesives, brackets, anchors, trim, and accessories necessary for a complete installation.

C. Coordinate with other sections for metal or wood backing.
   1. Contractor to coordinate all blocking required for sizes indicated on Drawings prior to enclosing stud cavities.

D. Install boards top and bottom with wall clips screwed to backing at 24 inches on center at blocking.

3.2 ADJUSTING

A. Verify that accessories required for each unit have been properly installed and that operating units function properly.

3.3 CLEANING

A. Clean units in accordance with the manufacturer's written instructions.

END OF SECTION

SECTION 101400 – IDENTIFYING DEVICES

PART 1 - GENERAL

1.1 SUMMARY

A. This Section includes the following:
   1. Provide all material, labor, equipment and services necessary to completely install all Identifying Devices , , Acrylic Signs and Decals, materials, accessories and other related items necessary to complete the Project as indicated by the Contract Documents.

B. Related Sections: The following Sections contain requirements that relate to this Section:
   1. ALL DIVISION 00 SPECIFICATION SECTIONS.
   2. ALL DIVISION 01 SPECIFICATION SECTIONS.
   3. 03 30 00 CAST-IN-PLACE CONCRETE
   4. 04 22 00 CONCRETE MASONRY UNITS
   5. 06 10 00 ROUGH CARPENTRY
   6. 08 11 00 METAL DOORS AND FRAMES
   7. 08 14 16 WOOD DOORS
   8. 08 80 00 GLASS
   9. 09 24 00 CEMENT PLASTER
   10. 09 29 00 GYPSUM BOARD
   11. ALL SPECIFICATION SECTIONS IN THE FACILITY SERVICES SUBGROUP.
   12. ALL SPECIFICATION SECTIONS IN THE SITE AND INFRASTRUCTURE SUBGROUP.

1.2 DEFINITIONS

A. Definitions pertaining to signage are as follows:
   1. Characters Shall mean all letters, numbers, symbols or pictograms.

1.3 SYSTEM DESCRIPTION

A. Design Requirements for Tactile Signage:
   1. Characters and Graphics:
      a. Finish and Contrast: Characters and their background shall have a non-glare finish. Characters shall contrast with their background, either light characters on a dark background or dark characters on a light background – CBC Section 11B-703.5.1, 11B-703.6.2, and 11B-703.7.1.
      b. Character Type: Characters on signs shall be raised 1/32 inch (0.794 mm) minimum and letters and numbers shall be sans serif uppercase characters accompanied by contracted (Grade 2) Braille complying with CBC Section 11B-703.3 and Table 11B-703.3.1.
      c. Character Size: Raised characters (letters and numbers) shall be a minimum of 5/8 inch (15.9 mm) and a maximum of 2 inches (51 mm) high.

d. Character Placement: Characters and Braille shall be in a horizontal format. Braille shall be placed a minimum of 3/8 inch (9.5 mm) and a maximum of 1/2 inch (12.7 mm) directly below the tactile characters; flush left or centered. When tactile text is multilined, all Braille shall be placed together below all lines of tactile text.

e. Proportions: Raised characters on signs shall be selected from fonts where the width of the uppercase letter "O" is 60 percent minimum and 110 percent maximum of the height of the uppercase letter "I". Stroke thickness of the uppercase "I" shall be 15 percent maximum of the height of the character.

2. Braille:

a. California Contracted Grade 2 Braille shall be used wherever Braille is required in other portions of these standards. Braille shall accompany all raised characters – CBC Section 11B-703.3 and Table 11B-703.3.1.

1) Dots shall be 1/10 inch (2.54 mm) on centers in each cell with 3/10 inch (7.6 mm) space between cells, measured from the first column of dots in the first cell to the first column of dots in the second cell.

2) Dots shall be raised a minimum of 0.025" - 0.037" above background.

3) Braille Dots shall be domed or rounded.

3. Signs shall be installed on the wall adjacent to the latch side of the door.

a. Where there is no space on the latch side, including at double leaf doors, signs shall be placed on the nearest adjacent wall, preferably on the right.

b. Mounting height shall be as indicated in details on the drawings and in compliance with 11B-703.4.1 and 11B-703.4.2. Signs also need clear floor area per 11B-703.4.2, centered on tactile characters.

B. Performance Requirements: It is the intention of this specification section and the drawings to form a guide for a complete, operable system signage system that is compliant with State and Federal Accessibility Regulations. Any items not specifically noted but necessary for a complete, operable and accessible system shall be provided under this section.

1.4 SUBMITTALS

A. Submit in accordance with Specification Section - SUBMITTAL PROCEDURES:

1. Product Data.

a. Submit manufacturer's full color range (including any standard, premium and custom colors) for selection by the Architect within thirty days of receipt of the NOTICE TO PROCEED.

1) Provide actual 2-inch x 2-inch sample colors and patterns available from the manufacturers for color selection.

2. Shop Drawings.

a. Submit shop drawings showing fabrication and installation of the work of this section including plans, elevations, sections, details of components, and attachments to other units of work, including accessibility dimensions for mounting heights.

3. Samples.

a. Provide actual 2-inch x 2-inch sample of each sign type specified.

4. Quality Assurance/Control Submittals:

a. Certificates:

1) Submit four (4) copies of certificates.

2) Upon completion of the installation, submit a Certificate from the Contractor (on the Contractor's Letterhead) and co-endorsed by the manufacturer/supplier, sub-contractor/installer that the signage supplied for this project requiring braille complies with the California Contracted Grade 2 Braille and the CBC Section 11B-703.3.
   a) Those attesting to the compliance certificate above shall also acknowledge that they are aware of the Submission Under Penalty Of Perjury per California Government Code Section 12650, et seq, pertaining to false claims, and further know and understand that submission of certification of a false claim may lead to fines, imprisonment and/or other severe legal consequences.

b. Manufacturer's Instructions:
   1) Submit three (3) copies of manufacturer's instructions.

5. Closeout Submittals in accordance with the following:
   a. Maintenance Data in accordance with Specification Section - PROJECT CLOSEOUT.
   b. Record Documents in accordance with Specification Section - RECORD DOCUMENTS.
   c. Warranty in accordance with Specification Section - PRODUCT WARRANTIES.

1.5 QUALITY ASSURANCE

A. Qualifications:
   1. Installer Qualifications:
      a. Engage an experienced Installer who has been approved by the manufacturer.
   2. Manufacturer's/Supplier's Qualifications:
      a. Firm's experienced in successfully producing/supplying products similar to those indicated for this Project, with sufficient production/supply capacity to produce/supply required units without causing delay in the work.

B. Regulatory Requirements:
   1. In accordance with Specification Section - Regulatory Requirements, and the following:
      a. ADA Americans with Disabilities Act of 1990.
      b. CARB Materials and equipment used for this Project shall comply with the current applicable regulations of the California Air Resources Board (CARB) and the Environmental Protection Agency (EPA), in the area where the project is located.
      c. CBC California Building Code - California Contracted Grade 2 Braille when required.

1.6 DELIVERY, STORAGE, AND HANDLING

A. Packing, shipping, handling, and unloading:
   1. Products shall be handled in such a manner as to assure that they are free from dents, scratches and other damage.

B. Acceptance at Site:
   1. Products must be in manufacturer's original unopened containers with labels indicating brand name, model, and grade.
   2. Damaged products will not be accepted.

C. Storage and protection:
1. Products shall be stored in a dry, protected area.
2. Products shall be stored in locked storage building.
3. Products shall be stored above ground on level platforms, six (6) inches above ground, allowing air circulation under stacked units.
   a. Cover materials and protect against wetting prior to use.
   b. Cover materials with protective waterproof covering providing for adequate air circulation and ventilation.

1.7 WARRANTY

A. Contractor's General Warranty:
1. In accordance with Specification Section - WARRANTIES.

B. Manufacturer’s Warranty:
1. In accordance with manufacturer's written standard warranty:
   a. Warranty Period One (1) Year.

C. Installer's Warranty:
1. In accordance with the terms of the Specification Section - WARRANTIES:
   a. Warranty period [One (1) Year.][Five (5) years.]

PART 2 - PRODUCTS

2.1 MANUFACTURERS

A. Products specified are from companies listed below, or approved equivalent. These products listed herein establish the size, pattern, color range and function selected by the Architect for this Project. Manufacturers listed as acceptable alternative manufacturers must still comply with the requirements of the products listed in order to be approved as an equivalent during the Submittal Process. If the acceptable manufacturers listed are not approved during the Submittal Process due to non-compliance with the written documents, then the Contractor shall submit product specified.
1. Acrylic Signs:
   a. As supplied by SIGNS OF SUCCESS, INC. using Gravograph New Hermes Signage Material.
      1) (805) 925-7545 or www.signsofsuccess.net.
2. Decals:
   a. SETON NAME PLATE COMPANY.

B. Products from other manufacturers not listed must submit in accordance with Specification Section - SUBSTITUTION PROCEDURES.

2.2 MATERIALS

A. Acrylic Signs:
1. Frameless, Profile Material bonded to Substrate Backup Material.

a. All signs shall be made of exterior acrylic materials regardless of location (exterior or interior) within the Project.
b. Profile Material:
1) GRAVO-TAC Exterior, modified acrylic material, 1-ply, 1/32 inch, matte finish, integral color as selected by the Architect.
c. Substrate Material:
1) 1/4 inch clear cast acrylic backup sheet.

B. Decals:
1. Provide outdoor grade permanent vinyl material with die cut graphics, characters and self-adhesive back for bonding to clean, smooth surfaces.

2.3 ACCESSORIES

A. Fasteners:
1. Concealed Attachment: Provide appropriate flathead countersunk stainless steel screws for the substrate backing in which the sign is to be applied.
2. Exposed Attachment – provide appropriate tamper resistant, flathead countersunk stainless steel screws with grommet finish washers for the substrate backing in which the sign is to be applied.
3. Adhesive: "Silastic Adhesive".
4. Foam Tape: SCOTCH MOUNT FOAM TAPE.

2.4 FABRICATION

A. Shop Assembly:
1. Braille Compliance:
a. See Part 1 of this specification – SYSTEM DESCRIPTION, and comply with the “Design Requirements for Tactile Signage” that requires California Contracted Grade 2 Braille.
2. Acrylic Signs:
a. Manufacturer’s standard Profile Material, computer engineered, adhesive backed, raised graphics, complying with the latest ANSI A 117.1.
1) Pictograms: All symbols shall match as closely as possible the published “International” symbols. Other interpretations will not be deemed acceptable. All symbols shall be approved prior to fabrication.
2) Do not exceed the depth of profiling as recommended by the manufacturer for the thickness of the material to be profiled.

2.5 FINISHES

A. Acrylic Signs:
1. Finish: Non-glare, face and core as selected by the Architect from the manufacturer’s full color line, including any custom colors complying with the requirements for contrasting colors of field to Symbols and Braille Text.
2. Allow for two-color application – one color for the field, and one color for the characters.

B. Decals:

1. Integral non-gare finish from outdoor vinyl and die cut vinyl graphics, characters, in contrasting colors as selected by the Architect.

PART 3 - EXECUTION

3.1 EXAMINATION

A. Site verification of conditions:
1. Prior to the execution of the work under this specification section, inspect the installed work executed under other specification sections of this Project Manual which affect the execution of work under this specification section.
2. Report unacceptable conditions to the Architect. Do not begin work until unacceptable conditions have been corrected.
3. Execution of work under this specification section shall constitute acceptance of existing conditions.

3.2 PREPARATION

A. Coordination:
1. Coordinate work under this specification section with work specified under other sections to ensure proper and adequate interface of work specified under this specification section.
2. Contractor to provide internal wall blocking for all attached identifying devices.

B. Protection:
1. Protect all adjacent surfaces from drips, spray, air pollution of surrounding environment, and other damage from work under this specification section.

C. Surface preparation:
1. Prepare surface in accordance with manufacturer's written instructions and recommendations.
2. Clean substrates of substances (oil, grease, rolling compounds, incompatible primers, loose mill scale, etc.) which could impair bond of materials specified within this section.

3.3 INSTALLATION

A. General:
1. In accordance with manufacturer's written instruction and recommendations unless specifically noted otherwise.
2. In accordance with approved Shop Drawings.
3. In accordance with Regulatory Requirements.
4. Set plumb, level, and square.

B. Layout:
1. Lines of all signs shall be straight and true.
2. Set plumb, level, and square.
3. Temporary positioning with foam tape.

C. Acrylic Signs:

1. Tape attachment is not allowed.
2. Seal all exposed edges at exterior conditions with compatible sealant, same color as sign substrate backup plate.

D. Mounting Conditions:
1. Metal Stud Framed Wall: Provide solid metal backing, attached to studs, adequate for fastening at all corners of sign.
2. Wood Stud Framed Wall: Provide solid wood backing, attached to studs, adequate for fastening at all corners of sign.
3. Concrete and Concrete Masonry: Provide drilled 1/4" diameter concrete or concrete masonry stainless steel anchors at all corner s of signs.
4. Glass: Provide "Silastic Adhesive" for permanent attachment of back-up plate. Provide blank plate of same material and size as the sign itself. Place on opposite side of glass and aligned with sign. Color as selected by the Architect.
5. Door: Fasten to door with tamper resistant flathead countersunk screws, minimum three (3) stainless steel screws with grommet finish washers per sign.

3.4 CLEANING

A. Clean in accordance with Specification Sections - TEMPORARY FACILITIES AND CONTROLS and PROJECT CLOSEOUT.
1. Leave area level and free of any ruts or debris. Appearance of earth surface shall be equal to or better than adjacent undisturbed surfaces.
2. Clean any soiled surfaces at the end of each day, minimum.
3. Finish shall be clean and ready for the application of any additional finishes.
4. In accordance with manufacturer's written instructions and recommendations.

3.5 PROTECTION

A. Protection from traffic:
1. Provide final protection and maintain conditions, in a manner acceptable to manufacturer and installer, which ensures the work of this section being without damage or deterioration until the time of Substantial Completion.

3.6 SCHEDULES

A. General:
1. All signs with text shall have California Contracted Grade 2 Braille unless otherwise noted.
2. Refer to Plumbing drawings for number and approximate location for "Gas Valve" signs. Signs shall be mounted +2" above Finished Floor.
3. Refer to drawings for various backing requirements.
4. All mounting heights are to be to center of tactile signs per the CBC, and all others as shown on the drawings.

B. Sign Material:
1. A = Acrylic
2. D = Decal.

C. Mounting Condition:
1. 1 = Metal Stud Framed Wall.
2. 2 = Wood Stud Framed Wall.
3. 3 = Concrete or Concrete Masonry.
4. 4 = Glass.
5. 5 = Door Mounted.

D. Mounting Location
1. Strike side adjacent (S-1).
   a. Strike side adjacent reverse swing (SR-1).
2. Strike side away (S-2).
   a. Strike side away reverse swing (SR-2).
3. Strike side adjacent wall reverse swing (SR-3).
   a. Strike side adjacent wall (S-3).
4. Hinge side adjacent (H-1).
   a. Hinge side adjacent reverse swing (HR-1)
5. Hinge side away (H-2).
   a. Hinge side away reverse swing (HR-2).
6. Hinge side adjacent wall (H-3).
   a. Hinge side adjacent wall reverse swing (HR-3).
7. Door mounted (D-1).
   a. Door mounted reverse swing (DR-1).

E. Sign Types:
1. Accessibility Entrance:
   a. 7"H x 7" L nominal square shape.
      1) 6" high non-Tactile International Symbol of Accessibility required.
      2) No Text or Braille required.
2. Toilet Room:
   a. 11" H x 7" L nominal rectangular shape.
      1) 6" H Tactile Gender Pictogram (Male, Female or Both).
      2) 3/4" high Tactile Text.
         a) "XXXXXX" and "RESTROOM".
      3) Braille required.
   b. 12" diameter nominal circular shape ("FEMALE").
      1) 6" high International Symbol of Accessibility required.
      2) No Text or Braille required.
   c. Equilateral triangle shape edges 12" L with vertex upward ("MALE").
      1) 6" high International Symbol of Accessibility required.
      2) No Text or Braille required.
   d. Equilateral triangle shape, superimposed within 12" diameter nominal circular shape ("UNISEX").
      1) 6" high International Symbol of Accessibility required.
      2) No Text or Braille required.
3. Occupancy Load:
   a. 7" h x 15" L nominal rectangular shape.
      1) 3/4" high non-Tactile Text required.

a) "THE NUMBER OF PEOPLE PERMITTED IN THIS ROOM SHALL NOT EXCEED "XXX" BY ORDER OF THE STATE FIRE MARSHAL"

2) No Braille required.

b. 7" h x 15" L nominal rectangular shape.

1) 3/4" high non-Tactile Text required.

a) "THE NUMBER OF PEOPLE PERMITTED IN THIS ROOM SHALL NOT EXCEED "XXX" FOR DINING, OR "XXX" FOR ASSEMBLY BY ORDER OF THE STATE FIRE MARSHAL"

2) No Braille required.

4. Assistive Listening:

a. 7"H x 7"L nominal square shape.

1) 6" high Assistive Listening Symbol of Accessibility required.

2) 5/8" high Text required.

3) No Braille required.

5. Room Identification:

a. 7" H x 7" L nominal square shape.

1) 2" high Tactile Text required.

2) Braille required.

b. 7" H x 15" L nominal rectangular shape.

1) 2" high Tactile Text required.

2) Braille required.

c. 11" H x 15"L nominal rectangular shape.

1) 2" high Tactile Text required.

2) Braille required.

6. Tactile Identification:

a. 3-1/2"H x 7"L nominal rectangular shape.

1) 3/4" high Tactile Text required.

2) Braille required.

b. 3-1/2"H x 15"L nominal rectangular shape.

1) 3/4" high Tactile Text required.

2) Braille required.

c. 7"H x 7"L nominal square shape.

1) 3/4" high Tactile Text required.

2) Braille required.

d. 7"H x 15"L nominal rectangular shape.

1) 3/4" high Tactile Text required.

2) Braille required.

7. Non-Tactile Identification:

a. 3-1/2"H x 7"L nominal rectangular shape.

1) 3/4" high Non-Tactile Text required.

2) No Braille required.

b. 3-1/2"H x 15"L nominal rectangular shape.

1) 3/4" high Non-Tactile Text required.

2) No Braille required.

c. 7"H x 7"L nominal square shape.

1) 3/4" high Non-Tactile Text required.

2) No Braille required.

d. 7"H x 15"L nominal rectangular shape.

1) 3/4" high Non-Tactile Text required.

2) No Braille required.

8. Directional:
   a. 3-1/2" H x 15" L nominal rectangular shape.
      1) Tactile Arrow symbol(s).
      2) 3/4" high Tactile Text.
      3) Braille required.
   b. 7" H x 15" L nominal rectangular shape.
      1) Tactile Arrow symbol(s).
      2) 3/4" high Tactile Text.
      3) Braille required.
   c. 11" H x 15" L nominal rectangular shape.
      1) Tactile Arrow symbol(s).
      2) 3/4" high Tactile Text.
      3) Braille required.
   d. 15" H x 15" L nominal square shape.
      1) Tactile Arrow symbol(s).
      2) 3/4" high Tactile Text.
      3) Braille required.

END OF SECTION

SECTION 101453 – ROAD AND PARKING SIGNAGE

PART 1 - GENERAL

1.1 SUMMARY

A. This Section includes the following:
   1. Provide all material, labor, equipment and services necessary to completely install all walk, road and parking signage materials, accessories and other related items necessary to complete the Project as indicated by the Contract Documents.

B. Related Sections: The following Project Manual Sections contain requirements that relate to this section:
   1. ALL DIVISION 00 SPECIFICATION SECTIONS.
   2. ALL DIVISION 01 SPECIFICATION SECTIONS.
   3. 03 30 00 CAST-IN-PLACE CONCRETE
   4. 32 31 13 CHAIN LINK
   5. ALL SPECIFICATION SECTIONS IN THE FACILITY SERVICES SUBGROUP.
   6. ALL SPECIFICATION SECTIONS IN THE SITE AND INFRASTRUCTURE SUBGROUP.

1.2 SUBMITTALS

A. Submit in accordance with Specification Section - SUBMITTAL PROCEDURES:
   1. Product Data.
      a. Submit manufacturer's full color range (including any standard, premium and custom colors) for selection by the Architect and Civil Engineer.
   2. Shop Drawings.
      a. Submit shop drawings from manufacturer detailing equipment assemblies and indicating dimensions, weights, the loading, required clearances, method of field assembly, components, and location and size of each field connection.
      b. Closeout Submittals in accordance with Specification Sections in Division One.

1.3 QUALITY ASSURANCE

A. Qualifications:
   1. Installer Qualifications:
      a. Engage an experienced Installer who has successfully completed three (3) projects of similar scope and size to that indicated for this Project.
   2. Manufacturer/Supplier Qualifications:
      a. Firm experienced in successfully producing/supplying products similar to that indicated for this Project, with sufficient production/supply capacity to produce/supply required units without causing delay in the work.

B. Regulatory Requirements:

1. In accordance with Specification Section - REGULATORY REQUIREMENTS, and the following:
   a. ADA Americans with Disabilities Act.
   b. CARB Materials and equipment used for this Project shall comply with the current applicable regulations of the California Air Resources Board (CARB) and the Environmental Protection Agency (EPA), in the area where the project is located.
   c. CBC California Building Code, all accessible parking signage shall be as required by CBC 11B-502.

1.4 DELIVERY, STORAGE, AND HANDLING

A. Packing, shipping, handling, and unloading:
   1. Products shall be handled in such a manner as to assure that they are free from dents, scratches and other damage.

B. Acceptance at Site:
   1. Products must be in manufacturer's original unopened containers with labels indicating brand name, model, and grade.
   2. Damaged products will not be accepted.

C. Storage and protection:
   1. Products shall be stored above ground on level platforms, six (6) inches above ground, allowing air circulation under stacked units.
      a. Cover materials with protective waterproof covering providing for adequate air circulation and ventilation.

1.5 PROJECT CONDITIONS

A. Existing Conditions:
   1. Examine site and compare it with the drawings and specifications. Thoroughly investigate and verify conditions under which the work is to be performed. No allowance will be made for extra work resulting from negligence or failure to be acquainted with all available information concerning conditions necessary to estimate the difficulty or cost of the work.
   2. Conduct work so as not to interfere unnecessarily with adjacent roads, streets, drives and walks.

1.6 WARRANTY

A. Contractor's General Warranty:
   1. In accordance with Specification Section - WARRANTIES.

B. Manufacturer’s Warranty:
   1. In accordance with manufacturer's written standard warranty:
      a. Warranty Period One (1) Year.

C. Installer's Warranty:
   1. In accordance with the terms of the Specification Section - WARRANTIES:

a. Warranty period [One (1) Year.][Five (5) years.]

PART 2 - PRODUCTS

2.1 MATERIALS

A. Signage material:
1. Signs shall be permanent and reflectorized, constructed of porcelain coating on steel with beaded text or approved equivalent.
2. Sign materials shall be hot-dipped galvanized, embossed steel, with a heavy-duty baked enamel finish.
a. 16 gage steel for all signs larger than 24" x 24".
b. 18 gage steel for all signs smaller than 24" x 24".

2.2 COMPONENTS

A. Parking Signage Types:
1. Parking Entrance Accessible Sign:
a. A sign shall be posted in a conspicuous place at each entrance to off-street parking facilities.
1) The sign shall be not less than 17 inches x 22 inches in size with lettering not less than one inch in height, which clearly and conspicuously states the following:

"Unauthorized vehicles parked in designated accessible spaces not displaying distinguishing placards or special license plates issued for persons with disabilities will be towed away at owner's expense. Towed vehicles may be reclaimed at

_____*_____or by_____*_____

telephoning_____*_____.

*Owner of Project to provide information as a permanent part of the sign. Sign provider to verify information needed with owner prior to fabrication.

2. Parking Stall Accessible Sign:
a. Each parking space reserved for the disabled shall be identified by a permanently affixed reflectorized sign and a minimum fine of $250.00.
1) Sign shall display the International Symbol of accessibility shall be white reflectorized symbol and border on blue background. See drawings for overall size.
2) Add van accessible sign to the parking space identified on the contract drawings. See drawings for overall size.
a) Van accessible sign shall have 1" high white letters, 1/2" white border on blue background.
3. Directional Accessible Sign:

a. 12" x 18" with International Symbol of Accessibility, 1" high letters that say "PERSONS WITH DISABILITIES PARKING", and directional arrow.
   1) Arrow shall be square tip style.
   2) Symbols and lettering shall be white reflectorized characters on blue background.

4. Stop Sign in accordance with traffic standards in the area where the project is located:
   a. 18" x 18" eight sided sign, 6" high letters that say "STOP".
      1) Lettering shall be white relectorized characters on RED background.

B. Brackets:
   1. Galvanized Pipe, attached with vandal resistant fasteners.
      a. Provide Owner with tool that is compatible with vandal resistant fasteners so that maintenance can be performed on the signs.

C. Posts:
   1. Pipe, galvanized, Schedule 40, in accordance with ASTM A 53 “Standard Specification for Pipe, Steel, Black and Hot-Dipped, Zinc-Coated, Welded and Seamless”, with compatible galvanized Dome Caps.

D. Concrete:
   1. See Specification Section – CAST-IN-PLACE CONCRETE.

E. Other Materials:
   1. Materials not specifically indicated but needed for proper installation shall be new and of first quality as selected by contractor subject to review by the Architect.

PART 3 - EXECUTION

3.1 EXAMINATION

A. Site verification of conditions:
   1. Prior to the execution of the work under this specification section, inspect the installed work executed under other specification sections of this Project Manual which affect the execution of work under this specification section.
   2. Report unacceptable conditions to the Architect. Do not begin work until unacceptable conditions have been corrected.
   3. Execution of work under this specification section shall constitute acceptance of existing conditions.

3.2 INSTALLATION

A. General:
   1. In accordance with Regulatory Requirements.
   2. Set plumb, level, and square.
      a. Set post plumb and at proper height.
      b. Place concrete and tamp to assure consolidation.
         1) Footings shall be 8" in diameter, 24 inches deep minimum, unless otherwise noted.

2) Top of concrete shall be 3-1/2 inches below finished grade.

c. Install brackets so signs are plumb and level.

d. The accessible signage shall be centered at the interior end of the parking space at a minimum height of 80 inches from the bottom of the sign to the parking space finished grade, ground or sidewalk.

1) In lieu of posts, the accessible parking space signage may also be centered on the wall at the interior end of the parking space (if applicable) at a minimum of 36 inches from the parking space finished grade, ground or sidewalk. Verify with Architect before using this option.

END OF SECTION

INTENTIONALLY LEFT BLANK

SECTION 102113 – TOILET PARTITIONS

PART 1 - GENERAL

1.1 SUMMARY

A. This Section includes the following:
   1. Provide all material, labor, equipment and services necessary to completely install all Toilet Partition materials, accessories and other related items necessary to complete the Project as indicated by the Contract Documents.

B. Related Sections: The following Project Manual Sections contain requirements that relate to this section:
   1. ALL DIVISION 00 SPECIFICATION SECTIONS.
   2. ALL DIVISION 01 SPECIFICATION SECTIONS.
   3. 03 30 00 CAST-IN-PLACE CONCRETE
   4. 04 22 00 CONCRETE MASONRY UNITS
   5. 06 10 00 ROUGH CARPENTRY
   6. 08 11 00 METAL DOORS AND FRAMES
   7. 09 24 00 CEMENT PLASTER
   8. 09 29 00 GYPSUM BOARD
   9. 09 30 13 TILE
   10. 09 91 00 PAINTING
   11. 10 28 13 TOILET ACCESSORIES
   12. ALL SPECIFICATION SECTIONS IN THE FACILITY SERVICES SUBGROUP.
   13. ALL SPECIFICATION SECTIONS IN THE SITE AND INFRASTRUCTURE SUBGROUP.

1.2 REFERENCES

A. In accordance with the following:
   1. AWS American Welding Society

1.3 SUBMITTALS

A. Submit in accordance with Specification Section - SUBMITTAL PROCEDURES:
   1. Product Data:
      a. Submit manufacturer's full color range (including any standard and premium colors) for selection by the Architect.
      b. Submit manufacturer's technical data.
   2. Shop Drawings:
      a. Submit shop drawings showing fabrication and installation of the work of this section including plans, elevations, sections, details of components, and attachment to other units of work.
   3. Samples:
      a. Provide two (2) 4 inch square samples of each color selected.
      b. Provide hardware samples on request.

4. Certificates:
   a. Provide certification that all products comply with NFPA 286.
5. Closeout Submittals in accordance with the following:
   a. Maintenance Data in accordance with Specification Section - PROJECT CLOSEOUT.
   b. Project Documents in accordance with Specification Section - PROJECT DOCUMENTS.
   c. Warranty in accordance with Specification Section - WARRANTIES and the article in this section titled "Special Warranty".

1.4 QUALITY ASSURANCE

A. Qualifications:
   1. Installer Qualifications:
      a. Engage an experienced Installer who is certified in writing by the manufacturer listed herein as qualified to install manufacturer's product in accordance with manufacturer's warranty requirements.
   2. Manufacturer Qualifications:
      a. Firm experienced in successfully producing products similar to that indicated for this Project, with sufficient production capacity to supply required units without causing delay in the work.

B. Regulatory Requirements:
   1. In accordance with Specification Section - REGULATORY REQUIREMENTS, and the following:
      a. CARB Materials and equipment used for this Project shall comply with the current applicable regulations of the California Air Resources Board (CARB)and the Environmental Protection Agency (EPA), in the area where the project is located.
      b. Furnish Door Hardware for each accessible stall to comply with ANSI A 117.1 and the CBC Section 11B.

1.5 DELIVERY, STORAGE, AND HANDLING

A. Packing, shipping, handling, and unloading:
   1. Products shall be individually wrapped.
   2. Products shall be handled in such a manner as to assure that they are free from dents, scratches and other damage.

B. Acceptance at Site:
   1. Products must be in manufacturer's original unopened containers with labels indicating brand name and model.
   2. Damaged products will not be accepted.

C. Storage and protection:
   1. Products shall be stored in a locked, dry and protected area.

1.6 PROJECT CONDITIONS

A. Existing Conditions:
   1. Examine the project and compare it with the drawings and specifications. Thoroughly investigate and verify conditions under which the work is to be performed. No allowance will be made for extra work resulting from negligence or failure to be acquainted with all available information concerning conditions necessary to estimate the difficulty or cost of the work.

1.7 WARRANTY

A. Contractor's General Warranty:
   1. In accordance with Specification Section - WARRANTIES.

B. Manufacturer’s Warranty:
   1. In accordance with manufacturer's written standard warranty:
      a. Warranty Period for Solid Plastic Systems Fifteen (15) Years.
      b. Upon project completion and acceptance, the subcontractor shall issue Owner a warranty against defective workmanship and materials.

C. Installer's Warranty:
   1. In accordance with the terms of the Specification Section - WARRANTIES:
      a. Warranty period One (1) Year.

PART 2 - PRODUCTS

2.1 MANUFACTURERS

A. Products specified are from companies listed below, or approved equivalent. These products listed herein establish the size, pattern, color range and function selected by the Architect for this Project. Manufacturers listed as acceptable alternative manufacturers must still comply with the requirements of the products listed in order to be approved as an equivalent during the Submittal Process. If the acceptable alternative manufacturers listed are not approved during the Submittal Process due to non-compliance with the contract documents, then the Contractor shall submit product specified.
   1. Specified Solid Plastic Toilet Partition product manufacturer:
      a. SCRANTON Products, includes:
         1) SANTANA PRODUCTS COMPANY
         2) COMTEC INDUSTRIES, INC.
         3) CAPITOL PARTITIONS

B. Products from other manufacturers not listed must submit in accordance with Specification Section - SUBSTITUTION PROCEDURES.

2.2 MATERIALS

A. Provide high density polyethylene (HDPE) solid polymer resin with homogeneous color throughout, 1 inch thick with seamless construction and all edges eased, tested in accordance with CBC 803.1.2, 803.12, NFPA 286 and ASTM standards as follows:

1. PHYSICAL PROPERTIES:
   a. Smoke Density per ASTM D 2843 “Test Method for Density of Smoke from the Burning or Decomposition of Plastics”:
      1) 75 maximum.
   b. Self Ignition per ASTM D 1929 “Test Method for Determining Ignition Temperature of Plastics”:
      1) 650 degrees minimum.
   c. Rate of Burn per ASTM D 635 “Test Method for Rate of Burning and/or Extent and Time of Burning of Plastics in a Horizontal Position”:
      1) 2.0 cm/min maximum.
   d. Density per ASTM D 1505 “Test Method for Density of Plastics by the Density-Gradient Technique”:
      1) 0.96 g/cc.
   e. Tensile Yield per ASTM D 638 “Test method for Tensile Properties of Plastics”:
      1) 4400 psi.
   f. Elongation per ASTM D 638 “Test method for Tensile Properties of Plastics”:
      1) 600 percent minimum.
   g. Izod Impact per ASTM D 256 “Test methods for Determining the Izod Pendulum Impact Resistance of Plastics”:
      1) 7.0 ft-lb/inch of notch.
   h. Tensile Impact per ASTM D 1822 “Test Method for Tensile-Impact Energy to Break Plastics and Electrical Insulating Materials”:
      1) 120 ft-lb/in^2.
   i. Brittleness Temp. per ASTM D 746 “Test Method for Brittleness of Plastics and Elastomers by Impact”:
      1) 76 degrees C maximum.
   j. Hardness per ASTM D 2240 “Standard Test Method for Rubber Property – Durometer Hardness”:
      1) 68 Shore D.
   k. Flexural Modulus per ASTM D 256 “Test methods for Determining the Izod Pendulum Impact Resistance of Plastics”:
      1) 220,000 psi.
2. Heat Sinc: Provide continuous aluminum edging strips fastened to the bottom edge at full width of doors, screens and panels.

2.3 COMPONENTS

A. Unless otherwise stated below, all materials shall be Stainless Steel.

B. Hardware:
   1. General:

a. Provide manufacturer's standard stainless steel, ASTM A 666 "Specification for Annealed or Cold-Worked Austenitic Stainless Steel Sheet, Strip, Plate, and Flat Bar", Type 302 or 304, 18 gage minimum, #4 finish, unless otherwise noted.
b. Provide Extruded Aluminum, 6063 T-5 parts with a minimum 0.125 inch wall thickness, at Head Rails and Head Rail Endcaps.

2. Hinges: Integral type consisting of :
   a. Top Pin: 4 inch long, 1/2 inch diameter nylon.
   b. Lower Pin: "Cam Action" nylon assembly that provides "self-closing feature" for the door with 3/16 inch diameter stainless steel pin inserted in upper cam in accordance with CBC Section 11B-604.8.1.2.
3. Door Strike and Keeper:
   a. Provide surface-mounted door strike and latch keeper for appropriate edge condition and coordinate with latch.
4. Latch:
   a. Provide surface-mounted, stainless steel slide latch conforming to accessibility requirements and pilaster and door conditions.
5. Door Bumper and Hook:
   a. At in-swinging stall doors provide surface-mounted combination hook and rubber-tipped door bumper sized to prevent door hitting mounted accessories.
   b. At out-swinging stall doors provide surface-mounted rubber-tipped door bumper sized to prevent door hitting mounted accessories.
   c. All hooks shall be mounted at +48" maximum AFF.
6. Door Pull in accrdance with CBC Section 11B-404.2.7:
   a. At stalls that are not identified as accessible, provide manufacturer's standard door pulls.
   b. At stalls that are identified as accessible, provide pull (or latch assembly) equipped with a loop or "U" Shaped door pull immediately below the latch on both sides of the door conforming to the Americans with Disabilities Act. The latch shall be the sliding, or other hardware not requiring the user to grasp, twist or pinch.
7. Wall Bumper:
   a. At out-swinging stall doors provide wall bumper with a rubber face.
8. Pilaster Shoes and Sleeves (Caps): 3-inches high, finished to match hardware.
   a. Furnish galvanized steel supports and leveling bolts at pilasters as recommended in writing by manufacturer to suit floor conditions. Make provisions for setting and securing continuous, extruded aluminum, antigrip, overhead bracing at top of each pilaster with a single crown to prevent the hiding of contraband. Provide shoe at each pilaster to conceal anchorage.
9. Wall Brackets - provide continuous length of panel, one-ear brackets and two-ear brackets as required.
10. Panel to Pilaster Brackets - provide continuous length of panel, "U" Shaped brackets.
11. Stirrup Brackets- provide one-ear brackets, two-ear brackets, and "U" Shaped brackets as required.
12. Head Rails - provide aluminum, anti-grip profile.
13. Head Rail Brackets - provide aluminum brackets compatible with Head Rail design.
14. Head Rail Endcaps - provide aluminum endcaps compatible with Head Rail design.

2.4 ACCESSORIES

A. Fasteners:

1. Provide manufacturer's standard stainless steel exposed fasteners finished to match hardware, with theft-resistant heads and nuts. For concealed anchors, use hot-dip galvanized, or other rust-resistant protective coated steel.

2.5 FABRICATION

A. Toilet Partition Design shall be as follows:
   1. Floor-Anchored and Overhead-Braced.

B. Furnish standard doors, panels, screens, and pilasters fabricated for toilet partition system. Units shall be furnished with cutouts, drilled holes, and reinforcement to receive partition-mounted hardware, accessories, and grab bars, as indicated on the drawings. Coordinate with Specification Section - TOILET ACCESSORIES, and schedule reinforcements for products actually provided for this project.
   1. Doors, panels, and screens shall be 55 inches high and mounted 14 inches above finished floor.
   2. Pilasters shall be 82 inches high.
   3. Unless otherwise indicated, furnish 24 inch wide in-swinging doors for non-accessible stalls, and 34 inch wide out-swinging doors for front opening accessible stalls.
      a. 36 inch for side opening accessible stalls.
   4. Furnish galvanized steel supports and leveling bolts at pilasters as recommended in writing by manufacturer to suit floor conditions. Provide Pilaster Shoes to conceal anchorage.
   5. Secure floor-anchored-overhead braced pilasters by providing continuous Head Rails with Head Rail brackets, and Head Rail Endcaps.
   6. All floor anchoring requires a solid two inches thick of solid flooring for proper anchorage.

C. Urinal Screens: "Floor-Anchored and Overhead-Braced (Per FUSD)" of the same construction and finish as toilet partitions.

2.6 FINISHES

A. Color shall be Black Paisley 0.090 (FUSD Standard).

PART 3 - EXECUTION

3.1 EXAMINATION

A. Site verification of conditions:
   1. Prior to the execution of the work under this specification section, inspect the installed work executed under other sections of this Project Manual which affect the execution of work under this specification section.
   2. Report unacceptable conditions to the Architect. Do not begin work until unacceptable conditions have been corrected.
   3. Execution of work under this specification section shall constitute acceptance of existing conditions.

3.2 PREPARATION

A. Coordination:
1. Coordinate work under this specification section with work specified under other sections to ensure proper and adequate interface of work.
2. Coordinate the blocking required in all walls with approved shop drawings.

B. Protection:
1. Protect all adjacent surfaces from drips, spray, air pollution of surrounding environment, and other damage from work under this specification section.

C. Surface preparation:
1. Prepare surface in accordance with manufacturer's written instructions and recommendations.
2. Clean substrates of substances (oil, grease, rolling compounds, incompatible primers, loose mill scale, etc.) that could impair bond of materials specified within this section.

3.3 INSTALLATION

A. General:
1. In accordance with manufacturer's written instructions and recommendations unless specifically noted otherwise.
2. In accordance with approved submittals.
3. In accordance with Regulatory Requirements.
4. Set plumb, level, and square.
5. Structurally reinforce and anchor work as required.
6. Panels that contain patched holes not utilized for attachment to walls and pilasters will be rejected by the Architect.

B. Layout:
1. Lines shall be straight and true.
2. Stalls:
   a. Provide clearances of not less than 1/2 inch between pilasters and panels, and not more than 1 inch between pilasters/panels and walls.
   b. Secure panels to walls with continuous brackets.
   c. Secure panels to pilasters with continuous brackets. Brackets are to align with continuous brackets at walls.
   d. Locate wall brackets so that holes for wall anchorages occur in masonry or tile joints.
   e. Secure panels to pilasters with not less than two stirrup brackets located to align with stirrup brackets at wall.
   f. Secure panels in position with manufacturer's written recommended anchoring devices.
   g. Secure pilasters to floor and level and plumb, and tighten installation with devices furnished.
   h. Secure head rails to each pilaster with not less than two fasteners.
   i. Hang doors and adjust so that tops of doors are parallel with head rail when doors are in a closed position. Clearance at vertical edge of doors shall be uniform top and bottom and shall not exceed 1/4 inch.

j. When wainscoting prevents the uninterrupted use of a continuous bracket, secure panels to walls with a continuous bracket to the top of the wainscoting and secure the top of the panels to the wall with a stirrup bracket.

3. Screens:
   a. Secure panels to walls with continuous brackets.
   b. Provide clearances of not more than 1 inch between panels and walls.
   c. Secure panels in position with manufacturer's written recommended anchoring devices to suit supporting structure.
   d. Set units to provide support and to resist lateral impact.

3.4 ADJUSTING

A. Adjust and lubricate for proper operation.

B. Doors:
   1. Adjust and set hinges on in-swinging doors to hold open approximately 30 degrees from closed position when unlatched.
   2. Adjust and set hinges on out-swinging doors (and entrance swinging doors) to return fully closed positions.
   3. Adjust and set hinges on doors at accessible stalls to return to fully closed positions.

3.5 CLEANING

A. Clean in accordance with Specification Section - PROJECT CLOSEOUT.
   1. Clean exposed surfaces using materials and methods recommended in writing by manufacturer.
   2. Protect as necessary to prevent damage during the remainder of the construction period.

END OF SECTION

SECTION 102813 – TOILET ACCESSORIES

PART 1 - GENERAL

1.1 SUMMARY

A. This Section includes the following:
   1. Furnish all material, labor, equipment and services necessary to furnish Toilet Accessories and other related items necessary to complete the Project as indicated by the Contract Documents unless specifically excluded.

B. Related Sections: The following Sections contain requirements that relate to this Section:
   1. ALL DIVISION 00 SPECIFICATION SECTIONS.
   2. ALL DIVISION 01 SPECIFICATION SECTIONS.
   3. 04 22 00 CONCRETE MASONRY UNITS
   4. 06 10 00 ROUGH CARPENTRY
   5. 08 80 00 GLASS
   6. 09 24 00 CEMENT PLASTER
   7. 09 29 00 GYPSUM BOARD
   8. 09 30 13 TILE
   9. 09 72 00 WALL COVERINGS
   10. 10 21 13 TOILET PARTITIONS
   11. ALL SPECIFICATION SECTIONS IN THE FACILITY SERVICES SUBGROUP.

1.2 SUBMITTALS

A. Submit in accordance with Specification Section - SUBMITTAL PROCEDURES:
   1. Product Data.
   2. Shop Drawings.
      a. Submit shop drawings from manufacturer detailing equipment assemblies and indicating dimensions, weights, loading, required clearances, method of field assembly, components, and location (including ADA Required dimensions for mounting locations), and size of each field connection.

1.3 QUALITY ASSURANCE

A. Regulatory Requirements:
   1. In accordance with Specification Section - REGULATORY REQUIREMENTS, and the following:
      a. ADA American's with Disabilities Act 1990.
      b. ANSI American National Standards Institute Specifications ANSI A117.1 "Accessible and Useable Buildings and Facilities".
      c. CARB Materials and equipment used for this Project shall comply with the current applicable regulations of the California Air Resources Board (CARB) and the Environmental Protection Agency (EPA), in the area where the project is located.

d. CBC California Building Code (California State Building Standards Code - Title 24) and the latest edition of DSA's California State Accessibility Standards Interpretive Manual (CalACS).

1.4 WARRANTY

A. Contractor's General Warranty:
1. In accordance with Specification Section - WARRANTIES.

B. Manufacturer’s Warranty:
1. In accordance with manufacturer's written standard warranty:
a. Warranty Period One (1) Year.

C. Installer's Warranty:
1. In accordance with the terms of the Specification Section - WARRANTIES:
a. Warranty period One (1) Year.

PART 2 - PRODUCTS

A. See Schedule in Part 3.

PART 3 - EXECUTION

3.1 INSTALLATION

A. All Toilet Room Accessories shall be furnished and installed by the Contractor, in accordance with manufacturer's written recommendations, and in accordance with accessibility mounting height.

B. Install in accordance with ANSI A117.1 Specification and CBC.

3.2 SCHEDULES

A. All devices listed herein shall be installed where shown, complete, and ready for use in full compliance with all applicable codes and standards. The manufacturers listed are acceptable as approved suppliers to the Owner (**FRESNO UNIFIED SCHOOL DISTRICT**). Substitution of manufacturers other than those listed, must be approved by the Owner.
1. Paper Towel Dispenser (Staff Toilet Rooms and Classrooms with Sinks):
a. Surface Mounted.
1) Acceptable manufacturers:
a) KIMBERLY CLARK "LEV-R-MATIC ROLL" #09736
2. Toilet Tissue Dispenser - Multi-Roll (Toilet Rooms which require ADA acccessibility, per Architect's drawings):
a. Accessible Stalls: Recessed multi-roll toilet tissue dispenser shall be Type 304, 22 gage stainless steel with all-welded construction; exposed surfaces shall have satin finish.
1) Acceptable manufacturers:

a) BOBRICK B-2888.

3. Foam Soap Dispenser:
   a. Provided by CENTRAL SANITARY SUPPLY, Fresno, CA 559-498-6204, at no cost to the district, Contractor Installed. Coordinate with District for quanty and delivery.
   b. Contractor shall verify locations and mounting heights of soap dispenser with the assigned district supervisor in area and the architectural drawings.
4. Sanitary Napkin Disposal in each stall at women's multi-stall restrooms:
   a. Surface mounted stainless steel.
      1) Acceptable manufacturers:
         a) BOBRICK B-270.
5. Grab Bars:
   a. 1-1/2" diameter, 18 gage seamless, stainless safety-grip finish, exposed mounting, vandal resistant screws, in configuration as required.
      1) Acceptable manufacturers:
         a) BOBRICK B-6806-99.
6. Mirrors, Stainless Steel:
   a. One piece channel frame, galvanized steel back, wall mounted for accessibility as detailed on the drawings, 1/4" tempered glass, size as shown.
      1) Acceptable manufacturers:
         a) BOBRICK B-1656 Series.
7. Seat Cover Dispensers (at each stall):
   a. Chrome, surface mounted, 16"W x 3 1/4"D x 11 1/2"H, half-fold.
      1) Acceptable manufacturers:
         a) KRYSTAL "KRY KD200"
8. Hand Dryer (FUSD Standard):
   a. Acceptable manufacturer:
      1) BOBRICK "Quiet Dry: Surface Mounted ADA Dryer, Model #B-7128, Stainless Steel, 115-Volt, 15 amp, 1725 Watts, Single Phase..

END OF SECTION

INTENTIONALLY LEFT BLANK

SECTION 104400 – FIRE PROTECTION SPECIALTIES

PART 1 - GENERAL

1.1 SUMMARY

A. This Section includes the following:
   1. Provide all material, labor, equipment and services necessary to furnish and install Fire Protection Specialties, accessories and other related items necessary to complete the Project as indicated by the Contract Documents unless specifically excluded.

B. Related Sections: The following Sections contain requirements that relate to this Section:
   1. ALL DIVISION 00 SPECIFICATION SECTIONS.
   2. ALL DIVISION 01 SPECIFICATION SECTIONS.
   3. 04 22 00 CONCRETE MASONRY UNITS
   4. 05 12 00 STEEL AND FABRICATIONS
   5. 06 10 00 ROUGH CARPENTRY
   6. 09 24 00 CEMENT PLASTER
   7. 09 29 00 GYPSUM BOARD
   8. 09 72 00 WALL COVERINGS
   9. 09 91 00 PAINTING
   10. ALL SPECIFICATION SECTIONS IN THE FACILITY SERVICES SUBGROUP.
   11. ALL SPECIFICATION SECTIONS IN THE SITE AND INFRASTRUCTURE SUBGROUP.

1.2 REFERENCES

A. Standards:
   1. In accordance with the following standards:
      a. NAAMM National Association of Architectural Metal Manufacturers

1.3 SUBMITTALS

A. Submit in accordance with Specification Section - SUBMITTAL PROCEDURES.
   1. Product Data, indicating Project, location in Project for each Model Number for Fire Extinguishers, Fire Blankets, Cabinets, Doors and Trim

1.4 QUALITY ASSURANCE

A. Qualifications:
   1. Installer Qualifications:
      a. Engage an experienced Installer who has successfully completed three [3] projects of similar scope and size to that indicated for this Project.
   2. Manufacturer/Supplier Qualifications:

a. Firm experienced in successfully producing/supplying products similar to that indicated for this Project, with sufficient production/supply capacity to produce/supply required units without causing delay in the work.

B. Regulatory Requirements:
1. In accordance with Specification Section - REGULATORY REQUIREMENTS, and the following:
a. CARB Materials and equipment used for this Project shall comply with the current applicable regulations of the California Air Resources Board (CARB) and the Environmental Protection Agency (EPA), in the area where the project is located.
b. NFPA National Fire Protection Association (NFPA 10)

1.5 WARRANTY

A. Contractor's General Warranty:
1. In accordance with Specification Section - WARRANTIES.

B. Manufacturer’s Warranty:
1. In accordance with manufacturer's written standard warranty:
a. Warranty Period One (1) Year.
2. Special Warranty: Manufacturer's standard form in which manufacturer agrees to repair or replace components of portable fire extinguishers that fail in materials or workmanship within specified warranty period.
a. Failures include, but are not limited to, the following:
1) Failure of hydrostatic test according to NFPA 10.
2) Faulty operation of valves or release levers.
a) Warranty Period: Six (6) years from date of Substantial Completion.

C. Installer's Warranty:
1. In accordance with the terms of the Specification Section - WARRANTIES:
a. Warranty period [One (1) Year.][Five (5) years.]

PART 2 - PRODUCTS

2.1 MANUFACTURERS

A. Products specified are from companies listed below, or approved equivalent. These products listed herein establish the size, pattern, color range and function selected by the Architect for this Project. Manufacturers listed as acceptable alternative manufacturers must still comply with the requirements of the products listed in order to be approved as an equivalent during the Submittal Process. If the acceptable alternative manufacturers listed are not approved during the Submittal Process due to non-compliance with the contract documents, then the Contractor shall submit product specified.
1. Specified product manufacturer, or approved equivalent:
a. LARSEN'S MANUFACTURING CO.
1) Special hardware when required "Larsen-Loc".
2) FEC-1:

a) Non-rated Model #AL 2409-R3.
b) Rated Model #AL-FS-2409-R3.
c) Fire Extinguisher Model #MP5-A.
d) Fire Extinguisher (Science CR and Voc. Shop) Model #MP10.

3) FEC-2:
a) Non-rated Model #AL 2409-SM.
b) Fire Extinguisher Model #MP5-A.
c) Fire Extinguisher (Science CR and Voc. Shop) Model #MP10.

4) FEC-3:
a) Non-rated Model #AL 2409-R1.
b) Rated Model #AL-FS-2409-R1.
c) Fire Extinguisher Model #MP5-A.
d) Fire Extinguisher (Science CR and Voc. Shop) Model #MP10.

5) WB-1 at Kitchens:
a) Bracket Model #1007.
b) Fire Extinguisher Model #WC-6L.

6) WB-1 at other locations:
a) Bracket Model #821.
b) Fire Extinguisher Model #MP5-A.
c) Fire Extinguisher (Science CR and Voc. Shop) Model #MP10.

7) FEBC-1:
a) Non-rated Model #AL-FB 3612-RM.
b) Rated Model #AL-FS-FB 3612-RM.
c) Fire Extinguisher Model #MP10.
d) Fire Blanket 62" x 80" re-processed wool.

8) FEBC-2:
a) Non-rated Model #AL-FB 361-SM.
b) Fire Extinguisher Model #MP10.
c) Fire Blanket 62" x 80" re-processed wool.

b. Acceptable alternative manufacturer:
1) JL INDUSTRIES

2. Products from other manufacturers not listed must submit in accordance with Specification Section - SUBSTITUTION PROCEDURES.

2.2 MANUFACTURED UNITS

A. Cabinet and Extinguisher Types:

1. Semi-Recessed "Architectural Series" Type FEC-1.
   a. Where wall depth is insufficient to accept complete box depth.
   b. Non-rated: Model No. AL 2409-R3, for rough opening of 25"H x 10-1/2"W x 3"D. Box is to be fabricated from manufacturer’s standard heavy gage steel, white baked enamel box. Provide at non-rated walls.
   c. Fire-Rated: Model No. AL-FS-2409-R3, for rough opening of 26-1/3"H x 11-5/8"W x 3-3/4"D. Box is to be fabricated from manufacturer’s standard double wall heavy gauge steel, white baked enamel, fire rated box, with approved fire rated barrier material. Provide at one-hour or two-hour rated walls.
   d. Provide 2-1/2 inch Rolled Edge Trim all around, fabricated from extruded aluminum with a clear satin anodized finish, with all corners mitered.

e. Typical Door (1/2" thick) to be "Vertical Duo" with tempered glass. Door to be fabricated from extruded aluminum with a clear satin anodized finish with "Black" Vertical Style Die Cut Lettering indicating "FIRE EXTINGUISHER" placed on the hinge side of the cabinet door.
   1) Vandal Resistant Solid Door (1/2 inch thick). Door to be fabricated from extruded aluminum with a clear satin anodized finish with "Black" Vertical Style Die Cut Lettering indicating "FIRE EXTINGUISHER" placed on the hinge side of the cabinet door. Provide Solid Door at the following locations only that are subject to impact and vandalism:
      a) Corridors.
      b) Gymnasiums.
      c) Locker Buildings
f. Typical Door Hardware shall include a satin finish pull handle with a self-adjusting roller latch and a continuous piano hinge.
   1) Vandal Resistant Hardware: Provide "Larsen-Loc" and factory applied Type A Style lettering near the handle that reads "IN CASE OF FIRE ONLY - PULL FIRMLY ON HANDLE". Provide at the following locations only subject to vandalism:
      a) Corridors.
      b) Gymnasiums.
      c) Locker Buildings
g. Provide Multi-Purpose Fire Extinguisher with a UL Rating of 3A-40B:C or 4A-80B:C at Science Classrooms and Vocational Shops.

2. Surface Mounted "Architectural Series" Type FEC-2.
   a. Model No. AL 2409-SM, outside trim dimensions of 27-1/2"H x 13"W x 6"D. Box is to be fabricated from manufacturer's standard clear satin anodized aluminum.
      1) Mount with bottom edge 27" above finish floor dimension.
   b. Typical Door (1/2" thick) to be "Vertical Duo" with tempered glass. Door and trim to be fabricated from extruded aluminum with a clear satin anodized finish with "Black" Vertical Style Die Cut Lettering indicating "FIRE EXTINGUISHER" placed on the hinge side of the cabinet door.
      1) Vandal Resistant Solid Door (1/2 inch thick) to be "Solid". Door and trim to be fabricated from extruded aluminum with a clear satin anodized finish with "Black" Vertical Style Die Cut Lettering indicating "FIRE EXTINGUISHER" placed on the hinge side of the cabinet door. Provide at the following locations only that are subject to impact and vandalism:
         a) Corridors.
         b) Gymnasiums.
         c) Locker Buildings
   c. Typical Door Hardware shall include a satin finish pull handle with a self-adjusting roller latch and a continuous piano hinge.
      1) Vandal Resistant Hardware: Provide "Larsen-Loc" and factory applied Type A Style lettering near the handle that reads "IN CASE OF FIRE ONLY – PULL FIRMLY ON HANDLE". Provide at the following locations only subject to vandalism:
         a) Corridors.
         b) Gymnasiums.
         c) Locker Buildings
   d. Provide Multi-Purpose Fire Extinguisherwith a UL Rating of 3A-40B:C or 4A-80B:C at Science Classrooms and Vocational Shops.

3. Fully Recessed "Architectural Series" Type FEC-3.
   a. Where wall depth is sufficient to accept complete box depth.
   b. Non-Rated: Model No. AL 2409-R1, for rough opening of 25"H x 10-1/2"W x 5-1/4"D. Box is to be fabricated from manufacturer's standard heavy gage steel, white baked enamel box. Provide at non-rated walls.
   c. Fire Rated: Model No. AL-FS-2409-R1, for rough opening of 26 1/8"H x 11-5/8"W x 6-1/8"D. Box is to be fabricated from manufacturer's standard heavy gage steel, white baked enamel, fire rated box. Provide at one-hour or two-hour rated walls.
   d. Provide 5/16 inch Flat Edge Trim all around, fabricated from extruded aluminum with a clear satin anodized finish, with all corners mitered.
   e. Typical Door (1/2" thick) to be "Vertical Duo" with tempered glass. Door to be fabricated from extruded aluminum with a clear satin anodized finish with "Black" Vertical Style Die Cut Lettering indicating "FIRE EXTINGUISHER" placed on the hinge side of the cabinet door.
      1) Vandal Resistant Solid Door (1/2 inch thick). Door to be fabricated from extruded aluminum with a clear satin anodized finish with "Black" Vertical Style Die Cut Lettering indicating "FIRE EXTINGUISHER" placed on the hinge side of the cabinet door. Provide at the following locations only that are subject to impact and vandalism:
         a) Corridors.
         b) Gymnasiums.
         c) Locker Buildings
   f. Typical Door Hardware shall include a satin finish pull handle with a self-adjusting roller latch and a continuous piano hinge.
      1) Vandal Resistant Hardware: Provide "Larsen-Loc" and factory applied Type A Style lettering near the handle that reads "IN CASE OF FIRE ONLY – PULL FIRMLY ON HANDLE". Provide at the following locations only subject to vandalism:
         a) Corridors.
         b) Gymnasiums.
         c) Locker Buildings
   g. Provide Multi-Purpose Fire Extinguisher with a UL Rating of 3A-40B:C or 4A-80B:C at Science Classrooms and Vocational Shops.

B. Bracket and Extinguisher Type:
   1. Surface mounted bracket Type WB-1.
      a. Kitchen Locations:
         1) Provide Fire Extinguisher Model No. WC-6L (Wet Chemical) with a UL Rating of 2A:K.
         2) Provide extinguisher bracket Model No. 1007, constructed of heavy gage steel with a white baked enamel finish.
      b. All other locations:
         1) Provide Multi-Purpose Fire Extinguisher with a UL Rating of 3A-40B:C or 4A-80B:C at Science Classrooms and Vocational Shops.
         2) Model No. 821 extinguisher bracket, constructed of heavy gage steel with a white baked enamel finish.
      c. Provide backing in wall for attachment of bracket(s).

C. Fire Extinguisher, Blanket, and Cabinet Type:
   1. Semi-Recessed "Architectural Series" Type FEBC-1.

a. Non-Rated: Model No. AL FB 3612-RM, for rough opening of 37"H x 13"W x 4"D. Box is to be fabricated from manufacturer's standard heavy gage steel, white baked enamel box. Provide at non-rated walls.
b. Fire Rated: Model No. AL-FS-FB 3612-RM, for rough opening of 38-1/8" H x 14-1/8" W x 4-7/8"D. Box is to be fabricated from manufacturer's standard double wall, heavy gage steel, white baked enamel, fire rated box, with approved fire barrier material. Provide at one-hour or two-hour rated walls.
c. Provide 4-1/2 inch Rolled Edge Trim all around, fabricated from extruded aluminum with a clear satin anodized finish, with all corners mitered.
d. Door to be "Vertical Duo" with tempered glass. Door to be fabricated from extruded aluminum with a clear satin anodized finish.
   1) Vertical Style Die Cut Lettering indicating "FIRE EXTINGUISHER" placed on the hinge side of the cabinet door.
   2) Provide "Red" Horizontal Style Die Cut Lettering indicating "FIRE BLANKET" placed near the top section of the cabinet door.
e. Typical Door Hardware shall include a satin finish pull handle with a self-adjusting roller latch and a continuous piano hinge.
f. Provide Multi-Purpose Fire Extinguisher with a UL Rating of 4A-80B:C.
g. Provide a 62" x 80" fire blanket for each cabinet. The Fire Blanket shall be fabricated from a rugged blend of reprocessed wool.
   1) Manufacture to the requirements of Fed. Spec. #CS-191-53.

2. Surface Mounted "Architectural Series" Type FEBC-2.
   a. Model No. AL FB 361-SM, outside dimensions 39-1/2" x 15-1/2" x 8"D. Box is to be fabricated from manufacturer's standard clear satin anodized aluminum. Provide at rated wall conditions where stud depth is less than 6" or at masonry or concrete walls.
   b. Door to be "Vertical Duo" with tempered glass. Door to be fabricated from extruded aluminum with a clear satin anodized finish.
      1) Vertical Style Die Cut Lettering indicating "FIRE EXTINGUISHER" placed on the hinge side of the cabinet door.
      2) Provide "Red" Horizontal Style Die Cut Lettering indicating "FIRE BLANKET" placed near the top section of the cabinet door.
   c. Typical Door Hardware shall include a satin finish pull handle with a self-adjusting roller latch and a continuous piano hinge.
   d. Provide Multi-Purpose Fire Extinguisher with a UL Rating of 4A-80B:C.
   e. Provide a 62" x 80" fire blanket for each cabinet. The Fire Blanket shall be fabricated from a rugged blend of reprocessed wool.
      1) Manufacture to the requirements of Fed. Spec. #CS-191-53.

2.3 FABRICATION

A. Cabinets: Provide manufacturer's standard box (tub), with trim, frame, door, and hardware to suit cabinet type, trim style, and door style indicated.
   1. Weld joints and grind smooth.
   2. Prepare doors and frames to receive locks.

B. Cabinet Doors: Fabricate doors according to manufacturer's standards, from materials indicated and coordinated with cabinet types and trim styles selected.
   1. Fabricate door frames of one-piece construction, with edges flanged.
   2. Miter and weld perimeter door frames.

C. Cabinet Trim: Fabricate cabinet trim in one piece with corners mitered, welded, and ground smooth.

2.4 FINISHES, GENERAL

A. Comply with NAAMM's "Metal Finishes Manual for Architectural and Metal Products" for recommendations for applying and designating finishes.

B. Protect mechanical finishes on exposed surfaces from damage by applying a strippable, temporary protective covering before shipping.

2.5 STEEL FINISHES

A. Surface Preparation: Clean surfaces of dirt, oil, grease, mill scale, rust, and other contaminants that could impair paint bond using manufacturer's standard methods.

B. Baked-Enamel Finish: Immediately after cleaning and pre-treating, apply manufacturer's standard two-coat, baked-enamel finish consisting of prime coat and thermosetting topcoat. Comply with paint manufacturer's written instructions for applying and baking to achieve a minimum dry film thickness of 2 mils.

PART 3 - EXECUTION

3.1 EXAMINATION

A. Site verification of conditions:
1. Prior to the execution of the work under this specification section, inspect the installed work executed under other sections of this Project Manual that affect the execution of work under this specification section.
   a. Examine walls and partitions for suitable framing depth and blocking where recessed and semi-recessed cabinets will be installed.
   b. Examine walls and partitions for suitable blocking where surface applied brackets will be installed.
   c. Examine fire extinguishers for proper charging and tagging.
      1) Remove and replace damaged, defective, or undercharged units.
2. Report unacceptable conditions to the Architect. Do not begin work until unacceptable conditions have been corrected.
3. Execution of work under this specification section shall constitute acceptance of existing conditions.

3.2 PREPARATION

A. Coordination:
1. Coordinate work under this specification section with work specified under other sections to ensure proper and adequate interface of work.

B. Protection:
1. Protect all adjacent surfaces from drips, spray, air pollution of surrounding environment, and other damage from work under this specification section.

C. Surface preparation:
1. Prepare surface in accordance with manufacturer's written instructions and recommendations.
2. Clean substrates of substances (oil, grease, rolling compounds, incompatible primers, loose mill scale, etc.) which could impair bond of materials specified within this section.

3.3 INSTALLATION

A. General:
1. In accordance with manufacturer's written instructions and recommendations unless specifically noted otherwise.
2. In accordance with approved submittals.
3. In accordance with Regulatory Requirements.
   a. Comply with all applicable ADA and CBC requirements in regards to accessible mounting heights.
4. Set plumb, level, and square.
5. Identification:
   a. Apply decals, vinyl lettering, or other identification devices at locations indicated.

B. Layout:
1. Lines shall be straight and true.

3.4 ADJUSTING

A. Test and adjust controls and safeties. Replace damaged or malfunctioning controls and equipment.
1. Replace cabinets that have been damaged or have deteriorated beyond successful repair by finish touchup or similar minor repair procedures.

3.5 CLEANING

A. Clean in accordance with Specification Section - PROJECT CLOSEOUT.
1. Clean any soiled surfaces immediately.
2. In accordance with manufacturer's written instructions and recommendations.
   a. Remove temporary protective coverings and strippable films, if any, as security fire-protection specialties are installed, unless otherwise indicated in manufacturer's written installation instructions.
   b. Adjust cabinet doors to operate easily without binding. Verify that integral locking devices operate properly.
   c. On completion of cabinet installation, clean interior and exterior surfaces as recommended in writing by manufacturer.

d. Touch up marred finishes, or replace cabinets that cannot be restored to factory-finished appearance. Use only materials and procedures recommended in writing or furnished by cabinet manufacturer.

3.6 PROTECTION

A. Protection from traffic:
1. Provide final protection and maintain conditions, in a manner acceptable to manufacturer and installer, which ensures the work of this section being without damage or deterioration until the time of Substantial Completion.

END OF SECTION

INTENTIONALLY LEFT BLANK

SECTION 107500 – FLAGPOLES

PART 1 - GENERAL

1.1 SUMMARY

A. This Section includes the following:
   1. Provide all materials, labor, equipment and services necessary to furnish flagpole, accessories and other related items necessary to complete the Project as indicated by the Contract Documents unless specifically excluded.

B. Related Sections: The following Sections contain requirements that relate to this Section:
   1. ALL DIVISION 00 SPECIFICATION SECTIONS.
   2. ALL DIVISION 01 SPECIFICATION SECTIONS.
   3. 03 11 01 CONCRETE FORMWORK
   4. 03 20 00 REINFORCEMENT
   5. 03 30 00 CAST-IN-PLACE CONCRETE
   6. ALL SPECIFICATION SECTIONS IN THE FACILITY SERVICES SUBGROUP.
   7. ALL SPECIFICATION SECTIONS IN THE SITE AND INFRASTRUCTURE SUBGROUP.

1.2 REFERENCES

A. Standards:
   1. In accordance with the following standards:
      a. AA The Aluminum Association
      b. DAV Disable American Veterans, U.S Flag Code

1.3 SUBMITTALS

A. Submit in accordance with Specification Section - SUBMITTAL PROCEDURES:
   1. Product Data:
      a. Include construction details, material descriptions, fabrication methods, dimensions of individual components and profiles, hardware, finishes, and operating instructions.
   2. Shop Drawings:
      a. Submit shop drawings showing fabrication and installation of the work of this section including plans, elevations, sections, details of components, and attachments to other units of work.
         1) Where installed products are indicated to comply with certain design loading, include structural computations, material properties, and other information needed for structural analysis that has been signed and stamped by a registered Civil or Structural Engineer in the State of California.
   3. Quality Assurance/Control Submittals:
      a. Engineering Calculations.

1) Submit 5 copies of calculations showing flagpole to have strength required to resist forces applied to it. Calculation in accordance with regulatory agencies and computed sand signed by a professional engineer registered in the State of California.

1.4 QUALITY ASSURANCE

A. Qualifications:
1. Installer Qualifications:
a. Engage an experienced Installer who has successfully completed three (3) projects of similar scope and size to that indicated for this Project.
b. Engage an experienced Installer who is certified in writing by the manufacturer listed herein as qualified to install manufacturer's product (or system) in accordance with manufacturer's warranty requirements.
2. Manufacturer/Supplier Qualifications:
a. Firm experienced in successfully producing/supplying products similar to that indicated for this Project, with sufficient production/supply capacity to produce/supply required units without causing delay in the work.

B. Regulatory Requirements:
1. In accordance with Specification Section - REGULATORY REQUIREMENTS.

1.5 WARRANTY

A. Contractor's General Warranty:
1. In accordance with Specification Section - WARRANTIES.

B. Manufacturer’s Warranty:
1. In accordance with manufacturer's written standard warranty:
a. Warranty Period One (1) Year.

C. Installer's Warranty:
1. In accordance with the terms of the Specification Section - WARRANTIES:
a. Warranty period One (1) Year.

PART 2 - PRODUCTS

2.1 MANUFACTURERS

A. These products listed herein establish the size, pattern, color range and function selected by the Architect for this Project. Manufacturers that are listed as acceptable alternative manufacturers and substitutions must still comply with the requirements of this project and the products listed in order to be approved as an equivalent during the Submittal Process. If the acceptable alternative manufacturers listed or substitutions are not approved during the Submittal Process due to non-compliance with the contract documents, then the Contractor shall submit product specified.
1. Specified Ground-Mounted Flagpole product manufacturer, or approved equivalent:
a. EDER FLAGPOLES Model #ECXA30IH.

b. Acceptable alternative manufacturers:
   1) CONCORD AMERICAN FLAGPOLE
      a) Manufacturers Standard Ground Set Flagpole similar to POLE TECH.
   2) POLE-TECH CO., INC.

B. Products from other manufacturers not listed must submit in accordance with Specification Section - SUBSTITUTION PROCEDURES.

2.2 MATERIALS

A. Foundation materials:
   1. Galvanized steel tube with self-centering bottom plate and lightning protector ground spike. Refer to Drawings for length of tube.

B. Concrete:
   1. In accordance with Specification Section - CAST-IN-PLACE CONCRETE.

2.3 MANUFACTURED UNITS

A. Ground-Mounted Flagpole:
   1. Material:
      a. Seamless, cold drawn, heat-treated, age hardened, 6063-T6 alloy tapered aluminum tubing, satin finish, with 3/16 inch thick wall and no visible joints.
      b. Features:
         1) Cast Aluminum Revolving Truck with enclosed stainless steel bearings and raceway.
         2) Stainless Steel Cable assembly.
         3) Delux Flag Arrangement.
         4) Retainer Ring and Counterweight.
         5) Exclusive M-Winch System removable crank handle.
         6) Spun Aluminum Flash Collar.
         7) Galvanized Steel Foundation Sleeve.
         8) Provide for a Satin #SB108 8" Aluminum "Silver" Ball on top of pole.
         9) Provide stainless steel swivel snap rings, plastisol covered steel counterweight, and nylon beaded retainer ring.
      c. Flags (Provided by Owner):
         1) USA – 5’ x 8’
         2) CALIFORNIA – 5’ x 8’
   2. Internal Halyard System:
      a. Provide an internal halyard flagpole with an M-Winch mounted inside the flagpole shaft, operable only with a removable crank handle. Access point door with key locking system for removable crank handle to operate the internal halyard system,
   3. Finish:
      a. Exposed surface: Satin brush and waxed.
      b. Portion in Concrete:
         1) Shop painted inside and outside with black asphaltium.
         2) Refer to Drawings for depth into concrete.
   4. Dimensions:
      a. Total length: 33 feet.

1) 30 feet exposed above grade.

b. Butt diameter: 6 inches.

c. Top diameter: 3-1/2 inches.

PART 3 - EXECUTION

3.1 INSTALLATION

A. In accordance with approved shop drawings and manufacturer's written recommendations.

B. Excavation as required and in accordance with Specification Section - EARTHWORK.

C. Pour concrete foundation integral with foundation tube and bottom plate.

D. Set flagpole plumb in dry packed sand.

E. Install accessories as required.

END OF SECTION

SECTION 21 00 00 - FIRE SPRINKLER SYSTEM

PART 1 - GENERAL

1.1 GENERAL MECHANICAL PROVISIONS:

A. The General Mechanical Provisions, Section 23 00 00, shall form a part of this Section with the same force and effect as though repeated here.

1.2 SCOPE:

A. General: Provide all labor, materials and services necessary for complete, lawful and operating systems as shown or noted on the drawings or as specified here. The entire Building C shall be fire sprinklered.

B. Design/Calculations: The sprinkler system has been designed and sized by hydraulic calculations in accordance with 2016 NFPA No. 13 and fire authority requirements. Calculations have been included in submittals. Provide current fire flow information from flow test at nearest fire hydrant. Fire flow test shall be done within 6 months of installation of sprinkler system.

C. Preparation of Drawings and Material Data Sheets: A complete fire sprinkler submittal (drawings, specifications, materials and hydraulic calculations) has been prepared. Hydraulic calculations shall conform to 2016 NFPA 13, paragraph 23.3.5 in all respects.

D. Coordination Drawings: Contractor shall submit coordination drawings with Contractor title block to Engineer for review, in addition to materials submittals. Deviations between bid documents and coordination drawings shall be specifically noted on drawings (highlighted, clouded, etc.). Any contractor requested design changes to these documents, including layout, materials, or calculations, may be considered a substitution and shall comply with paragraph 1.4 below.

1.3 WORK SPECIFIED ELSEWHERE:

A. Electrical wiring.

B. Fire alarm system.

C. Painting of exposed piping.

1.4 DESIGN CHANGES/SUBSTITUTIONS:

A. General: Design changes or substitutions of fire sprinkler system shall be submitted to Engineer for review.

B. Significant changes in design or substitution of materials may require a construction change document, requiring resubmission to DSA/FLS, as determined by the Engineer

and/or DSA District Engineer. Contractor shall bear all expenses incurred due to preparation and processing of design substitutions, up to and including submission to, and obtaining approval from, authority having jurisdiction. Refer to Section 23 00 00, 1.11, B.

C. Any substitution of “Flexible” type piping in lieu of “Rigid” pipe or any changes to size, manufacturer or lengths of “Flexible” type piping will require resubmittal of piping plans, product data sheets and hydraulic calculations to Engineer and authority having jurisdiction for review and approval.

PART 2 - PRODUCTS

2.1 STANDARDS:

A. All materials shall be in accordance with 2016 NFPA No.13 "Standard for the Installation of Sprinkler Systems". Underground mains shall be in accordance with 2016 NFPA No. 24 "Standard for the Installation of Private Fire Service Mains and Their Appurtenances".

2.2 PIPING MATERIALS:

A. General: The pressure rating of all piping, valves, flanges and other piping accessories shall be in accordance with code and fire authority requirements. Pressure ratings shall exceed the highest possible working pressure.

B. Piping:
1. Underground: Polyvinyl chloride, Class 200, DR 14, AWWA C900, with rubber ring joints, ASTM D1869. Cast or ductile iron fittings, AWWA C110 or C153, Class 250 or higher, with rubber ring joints, ASTM D1869.
2. Above Grade:
a. 2" and Smaller: Threaded black steel pipe, ASTM A53, schedule 40. 175 psi WOG (min.) black cast iron threaded fittings, ANSI B16.4, UL listed. Unions shall be Class 150 malleable iron threaded, ANSI B16.3.
b. 2-1/2" and Larger: Welded black steel pipe, ASTM A53, schedule 10. Standard weight carbon steel welding fittings, ANSI B16.9. Flanges shall be steel, ANSI B16.5. Roll grooved pipe couplings may be used for assembling welded sections, Victaulic, Grinnell, Gruvlok.

C. Gate Valve:
1. 2" and Smaller: All bronze, rising stem. UL listed.
2. 2-1/2" and Larger: Iron body, bronze mounted, outside screw and yoke. UL listed. (UL listed butterfly valves may be substituted for 4" and larger gate valves above grade.)

D. Check Valve:
1. 2" and Smaller: All bronze swing check. UL listed.
2. 2-1/2" and Larger: Iron body, bronze mounted swing check. UL listed.

E. Drain Valve: All bronze angle globe valve. UL listed.

F. Anchors and Hangers: Shall comply with 2016 NFPA No. 13.

2.3 SPRINKLER HEAD:

A. Automatic sprinkler head, concealed type in areas with finished ceilings and recessed or suspended lighting, semi-recessed in areas with finished ceilings and surface lighting, upright or pendent heads elsewhere (as allowed by NFPA 13). Heads in finished areas shall be Tyco RFII quick response concealed, or Globe Fire Sprinkler Corp., Quick Response GL Series Concealed Pendent, with chrome-finish metal cover plate. Heads elsewhere shall be quick response, Tyco, Model TY-FRB or Globe Fire Sprinkler Corp., Model GL Quick Response, with standard finish. UL listed. Temperature ratings shall be in accordance with NFPA No. 13. Provide extra heads (of each type installed) in accordance with code requirements. Exposed heads installed with deflector lower than 7'-6" above floor shall have wire guards.

2.4 ALARM VALVE ASSEMBLY:

A. Standard wet type alarm valve assembly and electric bell complete with trim as required by the authority having jurisdiction. Provide flow switch for connection to alarm system. Provide tamper switch. UL listed. Coordinate with Division 28.

2.5 POST INDICATOR VALVE:

A. UL listed valve with lockable operating handle, tamper switch and target visible through a glass covered post, reading either "OPEN" or "SHUT".

PART 3 - EXECUTION

3.1 PIPING INSTALLATION:

A. General: Piping shall be concealed in walls, above the ceilings or below grade unless otherwise noted. Exposed piping shall run parallel to room surfaces; location shall be approved by the Architect. No structural member shall be weakened by cutting, notching, boring or otherwise, unless specifically allowed by structural drawings and/or specifications. Where such cutting is required, reinforcement shall be provided as specified or detailed. Depth of cover in traffic areas shall be 36 inches (minimum).

1. Installer Certification: Installation shall be performed by certified fire sprinkler fitter(s) as required by CCR, Title 19, Divisions 1, Chapter 5.5. See CAL FIRE – Office of the State Fire Marshall Information Bulletin 17-002 for more information. The Bulletin can be downloaded from the following: http://osfm.fire.ca.gov/informationbulletin/pdf/2017/IB_AESCert_final_05_25_17.pdf

B. Standards: All piping shall be installed in accordance with 2016 NFPA No. 13 "Standard for the Installation of Sprinkler Systems". Underground mains shall be installed in accordance with 2016 NFPA No. 24 "Standard for the Installation of Private Fire Service Mains and Their Appurtenances".

C. Miscellaneous:

1. Escutcheons: Provide chrome plated metal escutcheons where piping penetrates walls, ceilings or floors in finished areas.
2. Pattern: Sprinklers shall be installed in a symmetrical pattern with lighting fixtures and with ceiling pattern. Heads located in lay-in ceilings shall be centered in panel.
3. Pipe Sleeves: All piping passing through concrete shall be provided with pipe sleeves. Allow 1" annular clearance between sleeve and pipe for piping 3" and smaller and 2" annular clearance for piping 4" and larger.
4. Access: Provide access doors as required for all valves, devices, etc.
5. Pipes Passing through Fire Rated Surfaces: Pipes passing through fire rated walls, floors, ceilings, partitions, etc. shall have the annular space surrounding the pipe, or pipe insulation sealed with fire rated materials in accordance with the requirements of 2016 CBC Section 714.
6. Concrete Thrust Blocks: Shall be constructed at all valves, tees, elbows, bends, crosses, reducers and dead ends in loose-joint pipe. Blocks shall cure a minimum of 7 days before pressure is applied. Concrete shall be 3000 psi mix.
7. Electrical Equipment: Piping shall not be run over electrical panels, motor control centers or switchboards, except where specifically allowed by CEC.

3.2 IDENTIFICATION:

A. All controls, piping, valves and equipment shall be labeled for function and service in accordance with NFPA No. 13.

3.3 TESTS AND ADJUSTMENTS:

A. Unless otherwise directed, tests shall be witnessed by a representative of the Architect and an inspector of the authority having jurisdiction. Contractor shall notify fire authority at least 48 hours prior to testing. At various stages and upon completion, the system must be tested in the presence of the enforcing agency. Work to be concealed shall not be enclosed until prescribed tests are made. Should any work be enclosed before such tests, the Contractor shall, at his expense, uncover, test and repair all work to original conditions. Leaks and defects shown by tests shall be repaired and the entire work retested. Test all systems in accordance with fire authority requirements and NFPA No. 13 and No. 24.

B. Backflow Preventer: All backflow preventers shall be tested according to manufacturer's recommendations and the USC Cross Connection Control and Hydraulic Research Manual (8th Edition). Testing shall be performed by an AWWA Certified Backflow Prevention Assembly Tester. Contractor shall certify in writing to the Architect the date which backflow preventers were tested and by whom test was witnessed.

3.4 CERTIFICATION:

A. At completion of the project, a Contractor’s Material and Test Certificate, indicating installation and testing in accordance with referenced standards, shall be completed. Copies shall be prepared by Contractor for the approving authorities, Owner and Contractor. Deliver certificates to Owner through Architect.

END OF SECTION

SECTION 220000 – PLUMBING

PART 1: - GENERAL

1.1 GENERAL MECHANICAL PROVISIONS:

A. The General Mechanical Provisions, Section 230000, shall form a part of this Section with the same force and effect as though repeated here.

1.2 SCOPE:

A. Included: Provide all labor, materials and services necessary for complete, lawful and operating systems as shown or noted on the drawings or as specified here. The work includes, but is not necessarily limited to, the following:
1. Sanitary sewer system.
2. Domestic water system.
3. Storm drain system.
4. Drain system (including condensate drain).
5. Fuel gas system.
6. All equipment as shown or noted on the drawings or as specified.
7. Demolition as indicated on drawings. Where demolition is called for, remove all equipment, piping, braces, housekeeping pads, supports and related items no longer required.
8. Lead Free: All equipment, fixtures, valves and fixture stops providing water for human consumption installed after January 1, 2010, must meet the “Lead Free” requirements for the State of California.

B. Work Specified Elsewhere:
1. Line voltage power wiring, disconnect switches and installation of all starters are included in the Electrical Section unless otherwise noted.
2. Concrete and reinforcing steel unless specifically called for on the drawings or specifications.
3. Painting unless specifically called for in the drawings or specifications.
4. Carpentry.

PART 2: - PRODUCTS

2.1 PIPING MATERIALS:

A. Sanitary Sewer:
1. Soil, Waste and Vent Piping (Non-Pressurized):
a. Inside Building, Within Five Feet of Building Walls to P.O.C. to Civil: Standard weight coated cast iron pipe and fittings. Plain end, CISPI 301, ASTM A888, or hub end with rubber gaskets, ASTM A74, ASTM C564. ABI, Charlotte, Tyler. Couplings shall be heavy-duty shielded couplings, Type 304 stainless steel, with neoprene gasket, ASTM C-1540. Husky HD 2000, Clamp-All 80, Mission HeavyWeight. MG Couplings are also acceptable.

2. Cleanouts: Comparable models of Josam, Wade, Mifab or Zurn are acceptable. Grease plug prior to installation. Floor Cleanouts: Smith 4023 with nickel bronze top in finished areas; Smith 4223 in utility areas. Wall Cleanouts: Smith 4532 with stainless steel cover and screw. Pipe Cleanouts: Iron body with threaded brass plug. Site cleanouts more than 5’ outside building may be PVC with PVC plug.
3. Cleanout Box: Precast reinforced concrete. Cast iron lid marked for service. Christy F8 in foot traffic areas; G5 in roadways. Provide with PVC pipe extension down to top of pipe.

B. Storm Drain (Including Rain Water Leader, RWL) - Inside Building, Within Five Feet of Building Walls to P.O.C. to Civil: Same as Soil, Waste and Vent Piping, except as otherwise noted on drawings. Where exposed to view on exterior of building, piping shall be galvanized steel with recessed drainage fittings.

C. Water and Gas:
1. Hot and Cold Water Piping: Materials used in the water system, except valves and similar devices, shall be of like material, except where otherwise approved by Engineer and Authority Having Jurisdiction, prior to start of work.
   a. Hard temper seamless copper, ASTM B88. Wrought copper fittings, ANSI B16.22. Type L with brazed joints (1100F, min.). 1-1/2" and smaller above grade may be soldered, 95-5 tin-antimony solder. All nipples shall be lead-free red brass (85% copper).
   b. Outside Building - Below Grade:
      (1) Same as Inside Building, except Type K copper.
      -or- (2) 3" and Smaller: Schedule 80 Polyvinyl chloride (PVC), ASTM D1785, with Schedule 80 PVC solvent weld fittings, ASTM D2466 where approved by administrative authority.
2 Gas Piping:
   a. Inside Building and All Above Grade: 2" and Smaller: Schedule 40 galvanized steel pipe, ASTM A53. 150 psi galvanized malleable iron screwed fittings, ANSI B16.3, ANSI B31.8. Flexible connections shall be corrugated stainless steel, CSA (US) approved. 2-1/2" through 4": May be screwed pipe as above or welded pipe as below. 6" and larger: Schedule 40 black steel pipe, ASTM A53. Standard weight carbon steel welding fittings, long radius ells, ANSI B16.9.
   b. Inside Building - Below Grade to Five Feet Outside Building: Same as Inside Building and All Above Grade. Provide sleeves and vents acceptable to administrative authority.
   c. Outside Building - Below Grade: Polyethylene pipe and fittings, ANSI B31.8, ASTM D2513, where allowed by administrative authority, Driscopipe 6500, Dupont Aldyl "A", Plexco. Otherwise, piping shall be coated schedule 40 steel, ASTM A53.
3. Valves and Specialties:
   a. Valves:
      (1) General: Manufacturer's model numbers are listed to complete description. Equivalent models of Crane, Kitz, Milwaukee, Nibco, Stockham, Walworth or Watts are acceptable. All valves of a particular type or for a particular service shall be by the same manufacturer. Butterfly valves may be substituted for 2-1/2" and larger gate valves above grade; see specification below. Provide a

minimum of two operating "T" handles for underground valves for each underground system where valves are required. The lengths of the handles are dependent upon the depth of the valves and the ability of the handles to fully open and/or close the valves. At least one “T” handle for each system shall be on site at the beginning of the installation of a particular system for emergencies, and the Construction Manager shall have access to these “T” handles and valves.

(2) Gate Valve: 2" and Smaller: All bronze. Non-rising stem. Threaded bonnet. Wedge disk. Malleable iron handwheel. 200 psi CWP. Nibco T-113-LF. 2-1/2" and Larger: Iron body, bronze mounted. Non-rising stem. Resilient wedge disk. 200 psi CWP. Flanged or AWWA hub end as applicable. Nibco F-619-RWS. Underground valves shall have square operating nut.

(3) Butterfly Valve: Ductile iron threaded lug body. Aluminum bronze disk. EPDM molded-in liner and seals. 416 stainless steel shaft. 6" and smaller valves shall have multi-position lever handle. 8" and larger valves shall have gear operator. Provide 2" extension neck at insulated pipes. Nibco LD-2000.

(4) Ball Valve: Full port. Lead free brass body, cap, stem, disk and ball. Screwed connection. Lever handle. PTFE seat and stem packing. Min. 400 psi CWP. CSA-US and UL listed. Nibco T-FP-600A-LF.

(5) Check Valve: Lead-free bronze swing check, regrinding. 200 psi CWP. Nibco T-413-Y-LF. For vertical applications use lead-free bronze, spring-loaded, lift-type. Nibco T-480-Y-LF.

(6) Plug Valve: Valves in gas piping systems must be UL or CSA listed for gas distribution. Eccentric bronze or nickel plated semi-steel plug. Semi-steel body. Bronze bushings. Buna-N-rings. 175 psi WOG. KeyPort Valve Series 400. 2" and smaller above grade may be listed full port ball valves, except in publicly accessible locations. Apollo, Jomar, Nibco.

(7) Valve Box: Precast reinforced concrete. Cast iron lid marked for service. Christy F8 in foot traffic areas; G5 in roadways. Provide with PVC pipe extension down to top of pipe.

b. Miscellaneous Specialties:

(1) Temperature and Pressure Relief Valve: ASME rated fully automatic, reseating combination temperature and pressure relief valve sized in accordance with energy input. Sensing element immersed within upper 6" of tank. Watts.

(2) Union: 2" and Smaller: AAR malleable iron, bronze to iron ground seat. 300 psi. Unions for copper piping shall be copper or lead free cast bronze. Anvil. Size 2-1/2" and Larger: Grooved pipe, synthetic gasket, malleable iron housing. EPDM gasket, NSF 61 rated. Victaulic Style 77, Gruvlok.

(3) Dielectric Coupling: Insulating union or flange rated for 250 psig. Wilkins DUXL Series.

(4) Shock Absorber: Multiple bellows. All stainless steel construction. Designed and applied in accordance with PDI WH201. Amtrol, Smith, Wade, Zurn.

(5) Gas Pressure Reducing Valve: Capacity and pressure ratings as indicated on drawings. American Meter.

D. Drain Piping (including Condensate): Same as inside building cold water piping.

E. Miscellaneous Piping Items:

1. Pipe Support:

a. Pipe Hanger: Steel "J" hanger with side bolt for piping 4" and smaller; steel clevis hanger for piping 5" and larger. Load and jam nuts. Size and maximum load per manufacturer's recommendation. Felt liner for copper piping. Hanger and rod shall have galvanized finish. B-Line, Anvil, Unistrut.

b. Isolating Shield: Galvanized steel shell and reinforcing ribs. 1/4" non-conducting hair felt pad. Pipe hanger in accordance with paragraph above. Increase hanger size per manufacturer's recommendation. B-Line, Semco, Superstrut.

c. Construction Channel: 12-gage, 1-5/8" x 1-5/8" galvanized steel channel. Single or multiple section. Self-locking nuts and fittings. B-Line, Anvil, Unistrut.

2. Flashing: Vent flashing shall be 4 lb/ft2 lead, 16" sq. flange, length sufficient to be turned down 2" into vent. Oatey. Flashing for other piping through roof shall be prefabricated galvanized steel roof jacks with 16" sq. flange. Provide clamp-on storm collar and seal water tight with mastic. For cold process built-up roof, material shall be 4 lb/ft^2 lead instead of galvanized steel. For single-ply roofing, use the roofing manufacturer’s recommended flashing material.

2.2 PIPING INSULATION MATERIALS:

A. General: All piping insulation materials shall have fire and smoke hazard ratings as tested under ASTM E-84 and UL 723 not exceeding a flame spread of 25 and smoke developed of 50.

B. Pre-Molded Fiberglass: Heavy density sectional pre-molded fiberglass with vapor barrier laminated all service jacket and pressure sealing vapor barrier lap. Thermal conductivity shall not exceed 0.25 Btu-in/hr-ft2-F at a mean temperature of 50F. Perm rating 0.02, ASTM E96. Puncture rating 50 Beach units, ASTM D781. Provide 3" (min.) wide tape of same material as lap for butt joints. For hot water piping to 140°F, thickness shall be 1" for pipe sizes less than 1”; 1-1/2" thickness for pipe sizes 1" and 1-1/2”; 2” thickness for 2” and larger. See Title 24, Part 6 “California Energy Code” for temperatures above 140°F. Knauf, Johns-Manville, Owens-Corning.

C. Fiberglass Blanket: Unfaced. Thermal conductivity shall not exceed 0.25 Btu-in/hr-ft2-F at a mean temperature of 50F. 1-1/2" thickness. Knauf, Johns-Manville, Owens-Corning.

D. PVC Jacket (for pipe, fittings and valves): Pre-molded polyvinyl chloride (PVC) jackets, 0.020" thickness. Size to match application. Provide solvent weld adhesive and PVC vapor barrier pressure sealing tape by same manufacturer. Zeston.

E. Aluminum Jacketing: Aluminum pipe and fitting jacketing, 0.016" thickness for straight pipe. 0.024" thickness for fittings. Integral moisture barrier. Stucco-Embossed finish. Provide pre fabricated aluminum strapping and seals by same manufacturer. ITW or RPR.

F. Outdoor Weather Barrier Mastic: Childers CP-10/11, Foster 46-50.

G. Metal Jacketing/Flashing Sealant: Childers CP-76, Foster 95-44 (gallon can quantities only; no tubes).

H. Molded Closed Cell Vinyl (Piping Insulation Under Lavatories and Sinks): Fully molded closed cell vinyl, 1/8” thick, minimum. Thermal conductivity shall not exceed 1.17 BTU-in/hr-ft^2-ºF at an average temperature of 73ºF. Weep hole in cleanout nut enclosure. Hinged cap over valve to allow access for servicing. Out of sight nylon fastening system and internal ribs on drain insulation to provide air gap (Lav-Guard Only). Truebro Lav-guard, McGuire Pro Wrap, Plumberex.

2.3 FIXTURES:

A. General: Provide rough-in for and install all plumbing fixtures shown on drawings. Except in equipment rooms, all trim, valves and piping not concealed in wall structure, above ceiling or below floors, shall be brass with polished chrome plate finish, unless noted otherwise. All enameled fixtures shall be acid resisting. Standard color is white unless otherwise noted.

B. Schedule: Refer to Plumbing Fixture Schedule on the drawings for list of fixtures and trim. Manufacturer's model numbers are listed to complete description. Equivalent models of American Standard, Haws, Just, Kohler, or Zurn are acceptable. For drainage fixtures, equivalent models of Josam, Mifab, Smith, Wade or Zurn are acceptable.

C. Stops and P-Traps: All fixtures shall be provided with stops and P-Traps as applicable. Wall mounted faucets, valves, etc. shall have integral stops or wall mounted stops.
   1. Stops: All hot and cold water supplies shall be 1/2" I.P.S. inlet angle stops with stuffing box, loose key lock shield, and brass riser (3/8" for 2-1/2 gpm and less, otherwise 1/2"). McGuire, Speedway.
   2. P-Traps: Semi-cast brass, ground joint. 17-gage. Clean-out plug. Unobstructed waterway. California Tubular, McGuire.

D. Caulking: Caulk fixtures with white G.E. "Sanitary SCS1700", mildew resistant silicone sealant with EPA listed anti-microbial.

2.4 EQUIPMENT:

A. General Requirements:
   1. Capacity: Capacities shall be in accordance with schedules shown on drawings. Capacities are to be considered minimum.
   2. Dimensions: Equipment must conform to space requirements and limitations as indicated on drawings and as required for operation and maintenance. Equipment will not be accepted that does not readily conform to space conditions. Prepare and submit layout drawings for all proposed equipment (different than scheduled units)

showing actual job conditions, required clearances for proper operation, maintenance, etc.

3. Ratings:
   a. Gas: Gas burning equipment shall be furnished with 100% safety gas shut-off, intermittent pilot ignition, and shall be CSA (US) or AGA certified.
   b. Electrical: Electrical equipment shall be in accordance with NEMA standards and UL or ETL listed where applicable standards have been established.
4. Piping: Each item or assembly of items shall be furnished completely piped for connection to services. Control valves and devices shall be provided. Equipment requiring domestic water for non-potable use shall be provided with backflow preventer acceptable for intended use by local governing authorities.
5. Electrical:
   a. General: Each item or assembly of items shall be furnished completely wired to individual terminal blocks for connection to single branch electrical circuit. All electrical accessories and controls required by equipment shall be furnished. Provide terminal blocks for controls and interlocks not included in equipment package. Manual and magnetic starters shall have ambient compensating running overcurrent protection in all ungrounded conductors. Magnetic starters shall be manual reset, and shall have H-O-A switches and auxiliary contacts. Controllers and other devices shall be in NEMA 1 or 3R enclosures as applicable.
   b. Wiring: Conductors, conduit, and wiring shall be in accordance with Electrical Specifications. Individual items within assembly shall be separately protected with dead front, fused disconnect, fuse block, or circuit breaker for each ungrounded conductor, all accessible on operating side of equipment. Switches, contacts and other devices shall be in ungrounded conductors.
   c. Motors: Shall be rated, constructed and applied in accordance with NEMA and ANSI Standards without using service factor. Single-phase motor shall be of type to suit application. Three-phase motors shall be open drip-proof, NEMA B design on pumps, NEMA C on reciprocating equipment, sealed ball bearing, three-phase induction, unless otherwise noted. Design shall limit starting inrush current and running current to values shown on drawings. Motors 1 horsepower and larger shall be the premium efficiency type, tested according to IEEE Standard 112, Method B. Motors exposed to weather shall be TEFC. Vertical motors with exposed fans shall have rain caps.
   d. Starters: Motor starters shall be furnished for all equipment except where starter is in a motor control center as designated on the electrical drawings. Deliver starter to Electrical Contractor for installation and wiring.
   e. Control Voltage: Equipment connected to greater than 240 volts shall be provided with 120 volt control circuit from integral protected transformer if separate source is not indicated on plans. 240 volt control is acceptable if confined within control panel.
   f. Submittals: Included in shop drawings shall be internal wiring diagrams and manufacturer's recommended external wiring.

B. Water Heater: Electric. Glass lined tank with magnesium anode protection. 150 psi working pressure. Fully insulated. Automatic temperature control. High limit control. Provide ASME rated temperature and pressure relief valve sized in accordance with energy input, dielectric couplings and drain cock. UL listed. A.O. Smith, American Appliance, State Industries.

C. Circulating Pump: In-line centrifugal. 3-speed motor. Body: Lead Free bronze body, brass impeller. Mechanical seals. Bronze sleeve bearings. Integral thermal overload protection. Bell and Gossett/Xylem, Taco. -OR- Body: Aluminum housing. All parts exposed to fluid, stainless steel. Water lubricated ceramic shaft and bearings. Epoxy encapsulated windings. Grundfos.

PART 3: - EXECUTION

3.1 PIPING INSTALLATION:

A. General:

1. Piping Layout: Piping shall be concealed in walls, above the ceilings, or below grade unless otherwise noted. Exposed piping shall run parallel to room surfaces; location to be approved by Architect. No structural member shall be weakened by cutting, notching, boring or otherwise, unless specifically allowed by structural drawings and/or specifications. Where such cutting is required, reinforcement shall be provided as specified or detailed. All piping shall be installed in a manner to ensure unrestricted flow, eliminate air pockets, prevent any unusual noise, and permit complete drainage of the system. All piping shall be installed to permit expansion and contraction without strain on piping or equipment. Vertical lines shall be installed to allow for building settlement without damage to piping. Pipe sizes indicated on the drawings are nominal sizes unless otherwise noted.
2. Joints:
   a. Threaded: Pipe shall be cut square and reamed to full size. Threads shall be in accordance with ANSI B2.1. Joint compound or tape suitable for conveyed fluid shall be applied to male thread only. Joints shall be made with three threads exposed.
   b. Welded or Brazed: Filler rod shall be of suitable or the same alloy as pipe. Brazing filler metal shall have a minimum melting point of 1100F. Welding or brazing shall be performed by a Certified Welder or Brazer as certified by an organization/institution that uses standards recognized by the American Welding Society (AWS) and meets the requirements of the ASME Boiler and Pressure Vessels Code, Section 9.
   c. Open Ends: Open ends of piping shall be capped during progress of work to preclude foreign matter.
   d. Electrical Equipment: Piping shall not be run over electrical panels, motor control centers or switchboards.
3. Fittings and Valves:
   a. Standard Fittings: All joints and changes in direction shall be made with standard fittings. Close nipples shall not be used.
   b. Reducers: Pipe size reduction shall be made with bell reducer fittings. Bushings shall not be used.

c. Unions: A union shall be installed on the leaving side of each valve, at all sides of automatic valves, at equipment connections, and elsewhere as necessary for assembly or disassembly of piping.

d. Valves: All valves shall be full line size. Provide shut-off valve for each building and each equipment connection. Provide shut-off valve at each point of connection to existing piping. At equipment connections, valves shall be full size of upstream piping, except that gas valves within 18" of the point of connection to the equipment may be the same size as the equipment connection.

e. Valve Accessibility: All valves shall be located so that they are easily accessible. Valves located above ceilings shall be installed within 24" of the ceiling. For situations where this is not practical or where valves are greater than 10' above the floor, chain wheel operators shall be provided. Chain shall extend down to 7' above the floor. All such installations must have prior review by the Engineer.

4. Pipe Support:

a. General: Hangers shall be placed to support piping without strain on joints or fittings. Maximum spacing between supports shall be as specified below. Actual spacing requirements will depend on structural system. Side beam clamps shall be provided with retaining straps to secure the clamp to the opposite side of the beam. Vertical piping shall be supported with riser clamp at 20' on center (maximum). Support pipe within 12" of all changes in direction. Support individual pipes with pipe hanger. Copper piping systems which protrude through a surface for connection to a fixture stop or other outlet shall be secured with a drop ell, Nibco 707-3-5, to a Holdrite Model #SB1 bracket; nipple through surface shall be threaded brass.

(1) Pressure Pipe:

Pipe Size (Inches)	Maximum Spacing* Between Supports (ft.)		
	Copper	Sch. 40 steel	Plastic
1/2	6	6	4
3/4	6	8	4
1	6	8	4
1-1/4	6	10	4
1-1/2	6	10	4
2	10	10	4
2-1/2	10	10	4
3	10	10	4
4	10	10	4
6	10	10	4

*Based on straight lengths of pipe with couplings only. Provide additional supports for equipment, valves or other fittings. Plastic piping shall be supported per the manufacturer's recommendations. Seismic requirements may reduce maximum spacing.

(2) Gravity Drain Pipe: Piping shall be supported at each length of pipe or fitting, but in no case at greater spacing than indicated above for pressure pipe.

b. Hot and Cold Water Piping: All hot and cold water piping shall have isolating shield; no portion of this piping shall touch the structure without an isolating shield except at anchor points for fixture rough-in.

c. Trapeze: Trapeze hangers of construction channel and pipe clamps may be used. Submit design to Engineer for review.

5. Miscellaneous:

a. Escutcheons: Provide chrome plated metal escutcheons where piping penetrates walls, ceilings, or floors in finished areas.

b. Pipe Sleeves: All piping passing through concrete shall be provided with pipe sleeves. Allow 1" annular clearance between sleeve and pipe for piping 3" and smaller, otherwise 2" annular clearance.

c. Pipes Passing through Fire Rated Surfaces: Pipes passing through fire rated walls, floors, ceilings, partitions, etc. shall have the annular space surrounding the pipe or pipe insulation sealed with fire rated materials in accordance with the requirements of 2016 CBC Section 714.

d. Dielectric Couplings: Dielectric couplings shall be installed wherever piping of dissimilar metals are joined, except that bronze valves may be installed in ferrous piping without dielectric couplings.

e. Thermometer Tap: Provide tee for instrument well. Minimum size of pipe surrounding well shall be 1-1/2". Mount on side of pipe.

B. Sanitary Sewer Piping:

1. General: Where inverts are not indicated, piping shall be installed at 1/4" per foot pitch. Piping 4" and larger may be installed at 1/8" per foot pitch where structural or other limitations prevent installation at a greater pitch. Bell and spigot piping shall be installed with barrel on sand bed; excavate hole for bell.

2. Cleanouts: Install cleanouts at ends of lines, at changes of direction greater than 45 degrees, and at not greater than 100 foot intervals. Locate interior cleanouts in accessible locations and bring flush to finished surface.

3. Vents: Vents shall terminate not less than 6" above the roof nor less than 12" from any vertical surface nor within 10' of any outside air intake. Install horizontal vent lines at 1/4" per foot pitch. Offset vents 2' minimum from gutters, parapets, ridges and roof flashing.

C. Storm Drain (Including Rain Water Leader, RWL): Similar to Sanitary Sewer. Piping with less than 24" of cover outside building walls shall be cast iron.

D. Water Piping: Connections to branches and risers shall be made from top of main. Supply header in fixture battery shall be full size to last fixture, reducing in size only on individual connections to each fixture in battery. Minimum pipe size shall be 1/2", unless otherwise noted. Exposed fixture stops and flush valves shall be installed with brass nipples for copper piping and galvanized nipples for galvanized piping. Nipples are to extend from outside of wall to fitting at header or drop behind finish wall surfaces. Pipe nipples shall be same size as stop or flush valve. Provide shut off for each building and each connection to equipment. Shock absorbers shall be installed in a vertical position as indicated on drawings. Only equipment mounted on vibration isolators shall be connected with flexible connections. Underground hot water and cold water piping which run parallel to each other shall be installed a minimum of 3 feet apart.

E. Gas Piping: Installation shall comply with CPC and NFPA 54 (National Fuel Gas Code). Shall be pitched to drain to drip legs at low points where other than dry gas conditions exist. No unions shall be installed except at connections to equipment. Provide shutoff and dirt leg (sediment trap) at each equipment connection. Only equipment mounted on vibration isolators shall be connected with flexible connectors. Under floor piping shall be sleeved and vented. Plastic pipe and fittings shall be joined in accordance with manufacturer's recommendations. Metal to plastic transition fittings shall be installed at all transitions. Provide 14-gage insulated tracer wire secured to pipe at 10' intervals with nylon ties. Terminate tracer 6" above grade at both ends.
Odor Fade Warning – The odorant in propane (LP) and natural gas is colorless and the intensity of its odor can fade under some circumstances. Contact the utility company for more information.
Submit installer training certification from polyethylene piping manufacturer certified trainer, include copy of trainer's certification. Training shall have been completed no more than 6 months prior to starting work.

F. Drain Piping (Including Condensate): Install with constant pitch to receptacle, 1/4" per foot where possible, otherwise 1/8" per foot minimum. Provide TEE with clean-out plug at all changes of direction. Provide trap at each air handling unit to prevent air leakage. Only equipment mounted on vibration isolators shall be connected with flexible connection. Piping not concealed in wall structure, above ceilings or below floors shall be chrome plated brass, except in equipment rooms, piping shall be galvanized steel. P&T relief and water heater drain piping shall be galvanized steel. Provide secondary drain piping where required.

G. Plastic Piping: Shall be cut square and assembled prior to solvent weld. Apply primer per manufacturer's recommendations. Coat male joint fully with solvent, make joint before solvent dries and wipe exterior clean.

3.2 PIPING INSULATION INSTALLATION:

A. Domestic Hot Water:
1. General: All domestic hot water piping, fittings and accessories shall be insulated.
2. Pipe: Apply pre-molded fiberglass sections to pipe using integral pressure sealing lap adhesive in accordance with manufacturer's recommendations. Stagger longitudinal joints. Seal butt joints with factory supplied pressure sealing tape.
3. Fittings and Valves:
   a. Wrap all fittings and valves with pre-cut fiberglass blanket to thickness matching adjoining insulation. Cover blanket with PVC jacket in accordance with manufacturer's recommendations. Solvent weld. Seal all joints with factory supplied pressure sealing vapor barrier tape with 1-1/2" (min.) overlap on both sides of joint. Insulate valves to stem. Do not insulate unions, flanges or valves unless water temperature exceeds 140F or the piping is exposed to weather.
   b. For miscellaneous fittings and accessories for which PVC jackets are not available or where proximity of fittings precludes a neat-appearing installation, the Contractor may cover the fiberglass blanket with stretchable glass fabric, one coat of lagging adhesive and a final coat of vapor barrier coating. All exposed ends of insulation shall be adequately sealed.

4. Additional Finish for Exposed Piping and Equipment: All piping and equipment exposed to view but protected from the weather shall be given an additional finish of PVC jackets.

B. Cold Water Piping-Freeze Protection: All cold water piping exposed to weather or other areas subject to freezing (i.e. ventilated attics, uninsulated exterior soffits, etc.) shall be insulated same as hot water piping. Cover with PVC jacketing where exposed to view, aluminum jacketing where exposed to weather.

C. Piping Insulation Under Lavatories and Sinks: Exposed water piping, water stops and drain piping under lavatories and sinks shall be insulated with 1/8" thick molded closed cell vinyl. Installation shall be in accordance with manufacturer's instructions.

3.3 FIXTURE INSTALLATION:

A. Fixture Height: Shall be as indicated on Architectural drawings.

B. Floor Drains or Floor Sinks: Shall be placed parallel to room surfaces, set level, flush with floor, and adjusted to proper height to drain. Cover openings during construction to keep all foreign matter out of drain line.

C. Wall Hung Fixtures: Shall be provided with proper backing and hanger plates secured to wall. Fixtures mounted on carriers shall bear against stop nuts, clear of wall surface. Caulk fixtures against walls with white G.E. "Sanitary SCS1700" silicone sealant. Caulking shall be smooth and flush with fixture surface (not concave).

D. Floor Mounted Fixtures: Shall be provided with proper support plates. Caulk floor mounted fixtures with white G.E. "Sanitary SCS1700" silicone sealant. Caulking shall be smooth and flush with fixture surface (not concave).

E. Other Connections: Rough-in and connection for trim or fixtures supplied by others shall be included in this specification section.

3.4 EQUIPMENT INSTALLATION:

A. General: It shall be the responsibility of the equipment installer to insure that no work done under other specification sections shall in any way block, or otherwise hinder the equipment. All equipment shall be securely anchored in place.

B. Connections to Equipment: Where size changes are required for connections to equipment, they shall be made immediately adjacent to the equipment and, if possible, inside the equipment cabinet.

3.5 TESTS AND ADJUSTMENTS:

A. General: Unless otherwise directed, tests shall be witnessed by a representative of the Architect. Work to be concealed shall not be enclosed until prescribed tests are made. Should any work be enclosed before such tests, the Contractor shall, at his expense, uncover, test and repair all work to original conditions. Leaks and defects shown by tests shall be repaired and entire work retested. Tests may be made in sections, however, all

connections between sections previously tested and new section shall be included in the new test.

B. Gravity Systems:
1. Sanitary Sewer: All ends of the sanitary sewer system shall be capped and lines filled with water to the top of the highest vent, 10' above grade minimum. This test shall be made before any fixtures are installed. Test shall be maintained until all joints have been inspected, but no less than 2 hours.
2. Drains (Including Condensate): Similar to Sanitary Sewer.
3. Storm Drain: Similar to Sanitary Sewer.

C. Pressure Systems:
1. General: There shall be no drop in pressure during test except that due to ambient temperature changes. All components of system not rated for test pressure shall be isolated from system before test is made.
2. Domestic Hot and Cold Water Piping: Maintain 100 psig water pressure for 4 hours.
3. Gas Piping: Maintain 100 psig air pressure for 4 hours.

3.6 DISINFECTION:

A. Disinfect all domestic water piping in accordance with 2016 CPC Section 609.9, and in accordance with administrative authority. Disinfection process shall be performed in cooperation with health department having jurisdiction and witnessed by a representative of the Architect. During procedure signs shall be posted at each water outlet stating, "Chlorination - Do Not Drink". After disinfection, one set of water samples shall be collected for bacteriological analysis. If the water fails the bacteriological purity test, Contractor shall disinfect the piping again and pay for any retesting required, at no additional cost to owner. Certificate of Bacteriological Purity shall be obtained and delivered to the Owner through the Architect before project completion. Include Certificate of Bacteriological purity at closeout with operation and maintenance manuals.

END OF SECTION

SECTION 230000 - GENERAL MECHANICAL PROVISIONS

PART 1: - GENERAL

1.1 GENERAL CONDITIONS:

A. The preceding General and Special Conditions and Divisions 00 and 01 requirements shall form a part of this Section with the same force and effect as though repeated here. The provisions of this Section shall apply to all of the Sections of Divisions 21, 22 and 23 of these Specifications and shall be considered a part of these sections.

1.2 CODES AND REGULATIONS:

A. All work and materials shall be in full accordance with current rules and regulations of all applicable codes. Nothing in these Drawings or Specifications is to be construed to permit work not conforming to these codes. Should the Drawings or Specifications call for material or methods of construction of a higher quality or standard than required by these codes, the Drawings and Specifications shall govern. Applicable codes and regulations include, but are not necessarily limited to, the following:

1. California Code of Regulations (CCR):
   a. Title 8, Industrial Relations
   b. Title 24, Part 1, Administrative Regulations
   c. Title 24, Part 6, California Energy Code, 2016 Edition
   d. Title 24, Part 11, California Green Building Code, 2016 Edition
2. California Building Code - CBC - 2016
3. California Mechanical Code - CMC - 2016
4. California Plumbing Code - CPC - 2016
5. California Fire Code - CFC - 2016
6. California Electrical Code - CEC - 2016
7. Air Diffusion Council - ADC
8. American Gas Association - AGA
9. Air Movement and Control Association - AMCA
10. American National Standards Institute - ANSI
11. Air Conditioning and Refrigeration Institute - ARI
12. American Society of Heating, Refrigerating, and Air Conditioning Engineers - ASHRAE
13. American Society of Mechanical Engineers - ASME
14. American Society for Testing and Materials - ASTM
15. American Water Works Association - AWWA
16. Cast Iron Soil Pipe Institute - CISPI
17. National Electrical Manufacturers Association - NEMA
18. National Fire Protection Association - NFPA
19. National Sanitation Foundation - NSF
20. Occupational Safety and Health Act - OSHA
21. Plumbing and Drainage Institute - PDI
22. Sheet Metal and Air Conditioning Contractors National Association - SMACNA
23. Underwriters' Laboratory - UL

1.3 PERMITS AND FEES:

A. The Contractor shall take out all permits and arrange for all tests in connection with his work as required. All charges are to be included in the work. Permits for equipment connected to a particular system are to be considered as part of the work included under each system. All charges or fees for service connections, meters, etc. shall be included in the work.

1.4 COORDINATION OF WORK:

A. Layout of materials, equipment and systems is generally diagrammatic unless specifically dimensioned. Some work may be shown offset for clarity. The actual locations of all materials, piping, ductwork, fixtures, equipment, supports, etc. shall be carefully planned prior to installation of any work in order to avoid all interference with each other, or with structural, electrical, architectural or other elements. Verify the proper voltage and phase of all equipment with the electrical plans. If discrepancies are discovered between drawing and specification requirements, the more stringent requirement shall apply. All conflicts shall be called to the attention of the Architect and the Engineer prior to the installation of any work or the ordering of any equipment. No work shall be prefabricated or installed prior to this coordination. No costs will be allowed to the Contractor for any prefabrication or installation performed prior to this coordination.

1.5 GUARANTEE:

A. Guarantee shall be in accordance with the General Conditions. These Specifications may extend the period of the guarantee for certain items. Where such extensions are called for, or where items are normally provided with guarantee periods in excess of that called for in the General Conditions, the certificate of guarantee shall be furnished to the Owner through the Architect. Equipment that is started and operated prior to acceptance shall have the guarantee extended to cover that period. Owner guarantee shall start at acceptance.

1.6 QUIETNESS:

A. Piping, ductwork and equipment shall be arranged and supported so that vibration is a minimum and is not transmitted to the structure.

1.7 DAMAGES BY LEAKS:

A. The Contractor shall be responsible for damages caused by leaks in the temporary or permanent piping systems prior to completion of work and during the period of the guarantee, and for damages caused by disconnected pipes or fittings, and the overflow of equipment prior to completion of the work.

1.8 EXAMINATION OF SITE:

A. The Contractor shall examine the site, compare it with Plans and Specifications, and shall have satisfied himself as to the conditions under which the work is to be performed. No allowance shall subsequently be made in his behalf for any extra expense to which he may be put due to failure or neglect on his part to make such an examination.

1.9 COMPATIBILITY WITH EXISTING SYSTEMS:

A. Any work which is done as an addition, expansion or remodel of an existing system shall be compatible with that system.

1.10 MATERIALS AND EQUIPMENT:

A. Materials and equipment shall be new unless otherwise noted. Materials and equipment of a given type shall be by the same manufacturer. Materials and equipment shall be free of dents, scratches, marks, shipping tags and all defacing features at time of project acceptance. Materials and equipment shall be covered or otherwise protected during construction as required to maintain the material and equipment in new factory condition until project acceptance.

1.11 SUBMITTALS:

A. Shop Drawings: Within 30 days of contract award, the Contractor shall submit six copies of shop drawings for all materials, equipment, etc. proposed for use on this project (this includes deferred approval items). Material or equipment shall not be ordered or installed until written review is processed by the Engineer. Any item omitted from the submittal shall be provided as specified without substitution.
All shop drawings must comply with the following:

1. Shop drawings are required for all material and equipment items and shall include manufacturer's name and catalog numbers, dimensions, capacities, performance curves, and all other characteristics and accessories as listed in the specifications or on the drawings. Descriptive literature shall be current factory brochures and submittal sheets. Capacities shall be certified by the factory. FAX submittals are not acceptable.
2. All shop drawings shall be submitted at one time in a neat and orderly fashion in a suitable binder with title sheet including Project, Engineer and Contractor, table of contents, and indexed tabs dividing each group of materials or item of equipment. All items shall be identified by the specification paragraph number for which they are proposed. All equipment shall also be identified by the mark number as indicated on drawings.
3. All capacities, characteristics, and accessories called for in the specifications or on the drawings shall be high-lighted, circled or underlined on the shop drawings. Calculations and other detailed data indicating how the item was selected shall be included for items that are not scheduled. Data must be complete enough to permit detailed comparison of every significant characteristic which is specified, scheduled or detailed.
4. Drawings shall be submitted in both hard copy and electronic form, electronic files shall be in their native format (i.e. DWG for AutoCAD, RVT for Revit, etc).
5. Electronic Submittals: Where allowed by Division 01, electronic submittals are acceptable providing the following requirements are met. Electronic submittals which do not comply with these requirements will be rejected.
   a. Submittal shall be a single file in PDF format, with bookmarks for table of contents and each tab, and sub-bookmarks for each item.
   b. All text shall be searchable (except text that is part of a graphic).
   c. Submittal shall include all items noted in 1 through 3 above, except a binder is not required.

d. Electronic submittals shall be processed through normal channels. Do not submit directly to the Engineer unless the Engineer is the prime consultant for the project.

e. Contractor shall provide Owner and Owner's Representative with hard copies of the final submittal. Coordinate exact number required with Owner through Architect/Engineer.

B. Substitutions:

1. Manufacturers and model numbers listed in the specifications or on the drawings establish the size, standard of quality, features and function selected by the Engineer for this Project. Alternate manufacturers may be submitted for review by the Engineer as allowed by Section 01 33 00 "Submittal Procedures" or Section 01 25 00 "Substitution Procedures", as applicable. If the alternate manufacturers are not approved, then the Contractor shall submit product specified. Calculations and other detailed data indicating how the item was selected shall be included.

2. Due to the complexity of mechanical equipment, features and functions, where equipment is scheduled on the drawings, any equipment submitted other than scheduled equipment is considered a substitution, and shall comply with the requirements of Section 01 25 00 "Substitution Procedures". It is understood that because of this complexity, subsequent reviews of Substitution Requests may be unavoidable. The Mechanical Engineer waives the fees identified in Section 01 25 00, for the initial and first subsequent review of a Substitution Request for mechanical equipment scheduled on the Drawings.

3. The Contractor shall assume full responsibility that substituted items or procedures will meet the specifications and job requirements and shall be responsible for the cost of redesign and modifications to the work caused by these items. At the Engineer's request, furnish locations where equipment similar to the substituted equipment is installed and operating along with the user's phone numbers and contact person. Satisfactory operation and service history will be considered in the acceptance or rejection of the proposed substitution.

C. Review: Submittals will be reviewed for general conformance with the design concept, but this review does not guarantee quantity shown, nor does it supersede the responsibility of the Contractor to provide all materials, equipment and installation in accordance with the drawings and specifications. The Contractor shall agree that shop drawing submittals processed by the Engineer are not Change Orders; that the purpose of shop drawing submittals by the Contractor is to demonstrate to the Engineer that the Contractor understands the design concept, that he demonstrates his understanding by indicating which equipment and material he intends to furnish and install and by detailing the fabrication and installation methods he intends to use. The Contractor shall agree that if deviations, discrepancies or conflicts between shop drawings and design drawings and specifications are discovered either prior to or after shop drawing submittals are processed by the Engineer, the design drawings and specifications shall control and shall be followed. If a resubmittal is required, submit a complete copy of the Engineer's review letter requiring such with the resubmittal.

1.12 MANUFACTURER'S RECOMMENDATIONS:

A. All material, equipment, devices, etc., shall be installed in accordance with the recommendations of the manufacturer of the particular item. The Contractor shall be

responsible for all installations contrary to the manufacturer's recommendations. The Contractor shall make all necessary changes and revisions to achieve such compliance. Manufacturer's installation instructions shall be delivered to and maintained at the job site through the construction of the project.

1.13 SCHEDULING OF WORK:

A. All work shall be scheduled subject to the review of the Architect, Engineer and the Owner. No work shall interfere with the operation of the existing facilities on or adjacent to the site. The Contractor shall have at all times, as conditions permit, a sufficient force of workmen and quantity of materials to install the work contracted for as rapidly as possible consistent with good work, and shall cause no delay to other Contractors engaged upon this project or to the Owner.

1.14 OPENINGS, CUTTING AND PATCHING:

A. The locations and dimensions for openings through walls, floors, ceilings, foundations, footings, etc. required to accomplish the work under this Specification Division shall be provided under this Division. Except as noted below, the actual openings and the required cutting and patching shall be provided by other Divisions. Coring through existing concrete or masonry walls, floors, ceilings, foundations, footings, etc., and saw cutting of concrete floors or asphaltic concrete required to accomplish the work under this Specification Division shall be provided under this Division. Patching of these surfaces shall be provided by other Divisions. Cutting or coring shall not impair the strength of the structure. Any damage resulting from this work shall be repaired at the Contractor's expense to the satisfaction of the Architect.

1.15 EXCAVATION AND BACKFILL:

A. General: Barrel of pipe shall have uniform support on sand bed. Sand shall be free from clay or organic material, suitable for the purpose intended and shall be of such size that 90 percent to 100 percent will pass a No. 4 sieve and not more than 5 percent will pass a No. 200 sieve. Unless otherwise noted, minimum earth cover above top of pipe or tubing outside building walls shall be 24", not including base and paving in paved areas.

B. Excavation: Width of trenches at top of pipe shall be minimum of 16", plus the outside diameter of the pipe. Provide all shoring required by site conditions. Where over excavation occurs, provide compacted sand backfill to pipe bottom. Where groundwater is encountered, remove to keep excavation dry, using well points and pumps as required.

C. Backfill:
1. 6" Below, Around, and to 12" Above Pipe: Material shall be sand. Place carefully around and on top of pipe, taking care not to disturb piping, consolidate with vibrator. Native soil may be used where allowed by Geotechnical (Soils) Report. Where native soil is used, trenching for gravity drain pipe shall be done using a laser-level and trencher.
2. One Foot Above Pipe to Grade: Material shall be sandy or silty loam, free of lumps, laid in 6" layers, uniformly mixed to proper moisture and compacted to required density. If backfill is determined to be suitable and required compaction is

demonstrated by laboratory test, water compaction in 6" layers may be used, subject to review by Engineer.

D. Compaction: Compact to density of 95% within building and under walkways, driveways, traffic areas, paved areas, etc. and to 90% elsewhere. Demonstrate proper compaction by testing at top, bottom and one-half of the trench depth. Perform these tests at three locations per 100' of trench.

1.16 PROTECTIVE COATING FOR UNDERGROUND PIPING:

A. All metal pipe below grade shall have a factory applied protective coating of extruded high density polyethylene, 35 to 70 mils total thickness, X-Tru-Coat, Scotchkote. All fittings and areas of damaged coating shall be covered with two layer double wrap of 10 mil polyvinyl tape to total thickness of 40 mils. Johns-Manville. Protective coating shall be extended 6" above surrounding grade.

1.17 ACCESS DOORS:

A. Provide access doors as required where equipment, piping, valves, ductwork, etc. are not otherwise accessible. Access doors shall match the wall or ceiling finish and fire rating as indicated on the Architectural drawings. 16-gage steel frame and 14-gage steel door with paintable finish, except in ceramic tile, where door shall be 16-gage stainless steel with satin finish. Continuous hinge. Key and cylinder lock (except quick-opening type for Emergency Gas Shutoff Valve). Deliver doors to the General Contractor for installation. Milcor. Unless otherwise noted, the minimum sizes shall be as follows:

1 valve up to 1-1/2"	12" x 12"
1 valve up to 3"	16" x 16"

1.18 HOUSEKEEPING PAD:

A. Housekeeping pads shall be 6" high concrete, 3000 PSI strength, unless otherwise noted. Pad shall extend 6" beyond the largest dimensions of the equipment, unless otherwise noted. The top edge of the pad shall have a 3/4" chamfer. The pad shall have #4 reinforcing bars at 12" on center, each way, located at the mid-depth of the pad. If not poured at the same time as the floor slab with pad rebar tied to floor rebar, the pad shall be anchored as follows: Drill 1" diameter, 4" deep hole in floor. Fill hole with "Por-Rok", then insert 8" long, #4 rebar into hole. Provide a minimum of 4 of these anchors per pad, but no more than 4 feet apart in either direction. Anchor points shall be 12" from the edge of the pad.

1.19 CONCRETE ANCHORS:

A. Steel bolt with expansion anchor requiring a drilled hole - powder driven anchors, adhesive anchors and concrete screws are not acceptable. Re-use of screw anchor holes shall not be permitted. Minimum concrete embedment shall be 4-1/2 diameters. Minimum spacing shall be 12 diameters center to center and 6 diameters center to edge of concrete. Post-installed anchors in concrete used for component anchorage shall be pre-qualified for seismic application in accordance with ACI 355.2 and ICC-ES AC193. Post-installed anchors in masonry used for component anchorage shall be pre-qualified for seismic applications in accordance with ICC-ES AC01. Maximum allowable loads for tension and shear shall be as

determined by Calculation in compliance with ACI 318-14, Chapter 17, and the anchor's ICC or IAPMO evaluation report. Hilti, Powers, Red Head.

1.20 EQUIPMENT ANCHORING:

A. All equipment shall be securely anchored in accordance with ASCE 07-10, Chapter 13, as amended by CBC Section 1616A.1. All equipment mounted on concrete shall be secured with a concrete anchor as shown on drawings at each mounting point.

1.21 SEISMIC SUPPORT AND RESTRAINT DESIGN SERVICE:

A. All mechanical systems (equipment, ductwork, piping, etc.) shall be provided with supports and seismic restraints in accordance with the "Seismic Restraint Components for Suspended Utilities", 2016 Edition, as published by Mason West Inc., OPM-0043-13, or other OSHPD pre-approved system, and in accordance with ASCE 07-10, Chapter 13, as amended by CBC Section 1616A.1. Brace spacing shall be reduced by 50% for cast iron, plastic, no-hub, or other non-ductile piping. A copy of this manual shall be kept on site at all times during construction.

B. Contractor shall obtain the services of a Seismic Design service to provide engineered seismic supports and restraints for the project. Mason Industries, or pre-approved equal.
   1. All seismic designs, including designs using OSHPD pre-approvals, shall be submitted as project specific engineered designs sealed and signed by a licensed California structural engineer. All seismic designs shall include project / application specific seismic design demand calculations. Said seismic design demand calculations shall account for seismic forces in all applicable direction including axial, lateral, vertical tension, vertical compression, etc. Designs shall account for prying, eccentricity, uneven loading, weak axis bending, etc.
   2. Seismic restraint layouts for piping, ductwork and electrical raceways shall be furnished on shop drawings or added to the contractor's shop drawings and shall include:
      a. The number, size and location of seismic braces.
      b. Maximum support loads and seismic loads at the seismic brace locations.
      c. Reference to specific details or pages from the OSHPD pre-approved system (OPM).
   3. Installations not addressed by the OPM approval must be designed, detailed and submitted along with the shop drawings.
   4 Submit seismic restraint layout drawings and special details for approval of the project structural engineer per the requirements listed in the OSHPD pre-approval (OPM).
   5. Seismic restraint layout drawings shall bear the stamp and signature of the registered professional structural engineer licensed in the state of California who designed the layout of the braces.

1.22 ASBESTOS CONTAINING MATERIALS AND ASBESTOS REMOVAL:

A. No materials or material coatings containing asbestos shall be allowed on this project.

B. All asbestos removal shall be by Owner. Asbestos is to be removed before the work is started. If the Contractor discovers asbestos which has not been removed, the Contractor shall immediately cease work in that area and promptly notify the Owner.

1.23 SYSTEM IDENTIFICATION:

A. Above Grade Piping: Provide markers on piping which is either exposed or concealed in accessible spaces. For piping systems, other than drain and vent lines, indicate the fluid conveyed or its abbreviation, either by pre-printed markers or stenciled marking, and include arrows to show direction of flow. Pre-printed markers shall be the type that wrap completely around the pipe, requiring no other means of fastening such as tape, adhesive, etc. Comply with ANSI A13.1 for colors. Locate markers at ends of lines, near major branches and other interruptions including equipment in the line, where lines pass through floors, walls or ceilings or otherwise pass into inaccessible spaces, and at 50' maximum intervals along exposed portions of lines. Marking of short branches and repetitive branches for equipment connections is not required.

B. Below Grade Piping: Bury a continuous, pre-printed, bright-colored, metallic ribbon marker capable of being located with a metal detector with each underground pipe. Locate directly over buried pipe, 6" to 8" below finished grade.

C. Equipment: All equipment shall be identified with a plastic laminated, engraved nameplate which bears the unit mark number as indicated on the drawings (e.g. AC-4). Provide 1/2" high lettering - white on black background. Nameplates shall be permanently secured to the exterior of the unit.

1.24 CLEANING:

A. Progressively and at completion of the job, the Contractor shall thoroughly clean all of his work, removing all debris, stain and marks resulting from his work. This includes but is not limited to building surfaces, piping, equipment and ductwork, inside and out. Surfaces shall be free of dirt, grease, labels, tags, tape, rust, and all foreign material.

B. At the end of each work day, the Contractor shall cover all open ends of piping and ductwork with protective plastic.

1.25 ACCEPTANCE TESTING:

A. The Contractor shall perform, document and submit all acceptance testing as required by California Code of Regulations, Title 24, and as noted on the Certificate of Compliance form (MECH-1C), where applicable. Submit a copy of the documentation to the Engineer for review (hardcopy or electronic), prior to submitting to Administrative Authority.

1.26 OPERATION AND MAINTENANCE INSTRUCTIONS:

A. Printed: Three copies of Operation and Maintenance Instructions and Wiring Diagrams for all equipment and parts list for all faucets, trim, valves, etc. shall be submitted to the Engineer. All instructions shall be clearly identified by marking them with the same designation as the equipment item to which they apply (e.g. AC-3). All Wiring Diagrams shall agree with reviewed Shop Drawings and indicate the exact field installation. All

instructions shall be submitted at the same time and shall be bound in a suitable binder with tabs dividing each type of equipment (e.g. Pumps, Fans, Motors, etc.). Each binder shall be labeled indicating "Operating and Maintenance Instructions, Project Title, Contractor, Date" and shall have a Table of Contents listing all items included.

B. Verbal: The Contractor shall verbally instruct the Owner's maintenance staff in the operation and maintenance of all equipment and systems. The controls contractor shall present that portion of the instructions that apply to the control system. The Engineer's office shall be notified 48 hours prior to this meeting.

1.27 RECORD DRAWINGS:

A. The Contractor shall obtain one set of blue line prints for the project, upon which a record of all construction changes shall be made. As the work progresses, the Contractor shall maintain a record of all deviations in the work from that indicated on the drawings. Final location of all underground work shall be recorded by depth from finished grade and by offset distance from permanent surface structures, i.e. building, curbs, walks. In addition, the water, gas, sewer, underfloor duct, etc. within the building shall be recorded by offset distances from building walls. As part of the Contractor’s overhead expense, request a full set of reproducible drawings to transfer the changes, notations, etc. from the marked-up prints to the reproducible drawings. The record drawings (marked-up prints and reproducibles) shall be submitted to the Engineer for review.

PART 2: - PRODUCTS (not used)

PART 3: - EXECUTION (not used)

END OF SECTION

SECTION 230001 - HEATING, VENTILATING AND AIR CONDITIONING

PART 1: - GENERAL

1.1 GENERAL MECHANICAL PROVISIONS:

A. The General Mechanical Provisions, Section 230000, shall form a part of this Section with the same force and effect as though repeated here.

1.2 SCOPE:

A. Included: Provide all labor, materials and services necessary for complete, lawful and operating systems as shown or noted on the drawings or as specified here. The work includes, but is not necessarily limited to, the following:
1. Air distribution system.
2. All equipment as shown or noted on the drawings or as specified. Furnish motor starters except where motor control centers are used. Coordinate with Division 26.
3. Refrigeration system.
4. System energy balance.
5. Coordinate with Section 230923 (Building Automation System) regarding location and installation of system sensors and to provide simultaneous start-up.
6. Demolition as indicated on drawings. Where demolition is called for, remove all equipment, piping, ductwork, braces, supports, housekeeping pads, temperature controls and related items no longer required.

B. Work Specified Elsewhere:
1. Line voltage power wiring, motor starters in motor control centers, disconnect switches and installation of all starters are included in the Electrical Section, unless otherwise noted.
2. Connection of condensate drains to equipment.
3. Concrete and reinforcing steel unless specifically called for in the drawings or specifications.
4. Painting unless specifically called for in the drawings or specifications.
5. Carpentry.

PART 2: - PRODUCTS

2.1 PIPING MATERIALS:

A. Refrigerant Piping: Hard drawn Type ACR copper, dried and capped. Wrought copper fittings, silver alloy brazed, 1100ºF, Silfos. Size 3/8" and smaller shall be refrigerant tube, ASTM B280.

B. Miscellaneous Piping Items:
1. Pipe Support:
a. Pipe Hanger: Steel "J" hanger with side bolt. Load and jam nuts. Size and maximum load per manufacturer's recommendations. Felt liner for

copper piping. Hanger and rod shall have galvanized finish. B-Line, Anvil, Unistrut.

b. Isolating Shield: Galvanized steel shell and reinforcing ribs. 1/4" non-conducting hair felt pad. Pipe hanger in accordance with paragraph above. Increase hanger size per manufacturer's recommendation. B-Line, Semco.

c. Construction Channel: 12-gage, 1-5/8" x 1-5/8" galvanized steel channel. Single or multiple section. Self-locking nuts and fittings. B-Line, Anvil, Unistrut.

2. Flashing: Flashing for piping through roof shall be prefabricated galvanized steel roof jacks with 16" square flange around pipe. Provide clamp-on storm collar and seal water tight with mastic. Maintain dielectric separation between copper and galvanized materials. For cold process built-up roof, material shall be 4 lb/ft^2 lead instead of galvanized steel. For single-ply roofing, use the roofing manufacturer's recommended flashing material.

2.2 PIPING INSULATION MATERIALS:

A. General: All piping insulation materials shall have fire and smoke hazard ratings as tested under ASTM E-84 and UL 723 not exceeding a flame spread of 25 and smoke developed of 50.

B. PVC Jacket (for pipe, fittings and valves): Pre-molded polyvinyl chloride (PVC) jackets, 0.020" thickness. Size to match application. Provide solvent weld adhesive and PVC vapor barrier pressure sealing tape by same manufacturer. Zeston.

C. Aluminum Jacketing: Aluminum pipe and fitting jacketing, 0.016" thickness for straight pipe. 0.024" thickness for fittings. Integral moisture barrier. Stucco-Embossed finish. Provide pre fabricated aluminum strapping and seals by same manufacturer. ITW or RPR.

D. Metal Jacketing/Flashing Sealant: Childers CP-76, Foster 95-44.

E. Foamed Plastic: Rubber based elastomeric preformed pipe insulation. Thermal conductivity shall not exceed 0.27 Btu-in/hr-ft2-ºF at a mean temperature of 70ºF. 1/2" thick. Provide adhesive by same manufacturer. Armacell Armaflex.

2.3 DUCTWORK MATERIALS:

A. General: All ductwork materials shall have fire and smoke hazard ratings as tested under ASTM E-84 and UL 723 not exceeding a flame spread of 25 and smoke developed of 50. Shall comply with 2016 CMC.

B. Metal Ductwork: Metal ductwork shall be galvanized sheet steel, lock forming quality, ASTM A-653, with gage and construction to match SMACNA Standard for pressure required (26 gage minimum).

C. Flexible Ductwork: Insulated flexible ductwork. One pound per cubic foot glass fiber insulation, 1-1/2" thick (R-6), 2" thick (R-8) where ductwork is outside the building thermal insulation envelope. Thermal conductivity shall not exceed 0.25 Btu-in/hr-ft^2-ºF

at a mean temperature of 75ºF. Seamless metalized reinforced polyester vapor barrier jacket. Continuous internal liner bonded to galvanized steel wire helix. Duct shall be capable of continuous operation at 1-1/2" of positive water static pressure and 4,000 ft/min air velocity. Duct shall be capable of continuous operation at 1-1/2" of positive water static pressure and 4,000 ft/min air velocity. Steel connection collars. Duct shall comply with NFPA 90A. JP Lamborn.

D. Duct Sealants: All Joints Exposed to Weather: Sealant shall be water based, Foster 32-19/32-17, Childers CP-146/148, United Duct Sealer WB or G.E. “SilPruf” SCS2000 silicone sealant. Joints Not Exposed to Weather (Except Spiral Wound Exposed to View in Finished Areas): Fiber reinforced. White in color. Foster 32-17, Childers CP-148, Design Polymerics DP1030, Hardcast Versa-Grip 181, Hardcast CCWI-181. Spiral Wound Joints Not Exposed to Weather and Exposed to View in Finished Areas: Non fibrated. Gray in color. Foster 32-19, Childers CP-146, Design Polymerics DP 1010, or United Duct Sealer WB.

E. Spiral Wound Metal Ductwork: Spiral wound factory fabricated galvanized steel, gages in accordance with the CMC. All fittings shall be factory fabricated. Fittings exposed to view shall have all seams fully welded. Tees and laterals shall be conical type. Connections to plenums shall be with bell-mouth fittings. 12" and smaller ells shall be two piece die-stamped. Ells larger than 12" shall be five piece. McGill Airflow. Shop fabricated fittings are not acceptable.

2.4 AIR TERMINALS AND DUCT FITTINGS:

A. Grilles: (Grilles, Registers, Diffusers and Louvers)
1. Information on Drawings: Refer to Grille Schedule on the drawings for the list of grilles. Manufacturer's model numbers are listed to complete the description Titus. Equivalent models of Anemostat or Krueger are acceptable. Refer to the floor plans for neck size, CFM, air diffusion pattern and fire damper, if required.
2. Performance: Submit complete performance data (throw, pressure drop, noise level, etc.) for all grilles proposed, other than those scheduled. Testing shall be in accordance with ANSI/ASHRAE 70-1991. If, according to the certified data of the manufacturer of the proposed units, the sizes indicated on the drawings will not perform satisfactorily, the units shall be reselected by the Contractor for the proper diffusion, spread, pressure drop, throw and noise level.
3. Frame and Accessories: All supply, return, and exhaust grilles shall not have an opposed blade volume control damper unless otherwise noted. All surface mounted grilles shall have a perimeter gasket and flanged edge. All grilles shall have frames suitable for mounting in the surfaces designated by the architectural drawings. Key or screwdriver operated, no slide bars.
4. Finish: All ceiling and wall grilles and all louvers shall have a paintable white finish unless otherwise noted. Interior components (everything behind the face plate) shall be flat black. Floor grilles shall have an anodized aluminum finish unless otherwise noted.

B. Branch Duct Volume Damper: Volume control damper (VCD) in rectangular ducts shall be as follows: Opposed blade, 6" maximum blade width, 16-gage blade, 48" maximum length, nylon or oil impregnated bronze bearings, 1/2" diameter pin shaft, 16-gage channel frame, actuating rod and linkage out of air stream. VCD in round duct shall be as

follows: Damper blade full height of branch and 1" less than branch width. All branch dampers shall have regulator with stamped steel handle, spring loaded shaft nut, cast body and serrated self-locking die cast core. Regulator for horizontal ducts overhead shall be mounted on sides or bottom of ducts. Secure a 12" length of brightly colored plastic ribbon to handle for ease of location. Where rectangular or round ductwork is insulated, slit insulation to allow handle to protrude. Ventlok 641 (with 607 end bearing for round ducts).

C. Extractor: Curved blade turns in adjustable position rigid frame. Tuttle and Bailey Deflectrol.

D. Turning Vanes: Double wall, hollow metal, air foil shape. Spacing in accordance with manufacturer's recommendations. Aero Dyne HEP.

E. Flexible Connection: UL listed neoprene coated 30 ounce fiberglass cloth. 3" metal, 3" fabric, 3" metal. Ventglas.

2.5 DUCTWORK INSULATION MATERIALS:

A. General: All ductwork insulation materials shall have fire and smoke hazard ratings as tested under ASTM E-84 and UL 723 not exceeding a flame spread of 25 and smoke developed of 50.

B. Fiberglass Blanket: **Installed** thermal resistance at a mean temperature of 75ºF shall not exceed indicated value. 3/4 lb/ft^3 or 1 lb/ft^3, **R-6** where ductwork is within the building thermal insulation envelope. 3/4 lb/ft^3 **R-8** where ductwork is outside the building thermal insulation envelope and/or above the roof. Faced with glass reinforced foil laminated to Kraft paper. Certainteed, Knauf, Johns-Manville, Owens-Corning.

C. Acoustic Lining: Glass fiber. **Installed** thermal resistance at a mean temperature of 75ºF shall meet or exceed indicated value. One side coated to prevent fiber erosion up to 6000 ft/min. Average noise reduction coefficient of 0.80. 1.5 lb/ft3 density. 1" thick (**R-4.2**) where ductwork is within the building thermal insulation envelope. 2" thick (**R-8**) where ductwork is outside the building thermal insulation envelope and/or above the roof. Certainteed, Knauf, Johns-Manville, Owens-Corning.

D. Bonding Adhesive: Design Polymerics DP2501, Foster 85-60.

2.6 EQUIPMENT:

A. General Requirements:
1. Capacity: Capacities shall be in accordance with schedules shown on drawings. Capacities are to be considered minimum.
2. Dimensions: Equipment must conform to space requirements and limitations as indicated on drawings and as required for operation and maintenance. Where Architectural screening is indicated, equipment shall not extend above or beyond screening. Equipment will not be accepted that does not readily conform to space conditions. Prepare and submit layout drawings for all proposed equipment (different than scheduled units) showing actual job conditions, required clearances for proper operation, maintenance, etc.

3. Ratings:
   a. Gas: Gas burning equipment shall be furnished with 100% safety gas shut-off, intermittent pilot ignition, and be CSA (US) certified, except that boilers shall be CSA (US) certified or UL listed.
   b. Electrical: Electrical equipment shall be in accordance with NEMA Standards and UL or ETL listed where applicable standards have been established.
4. Piping: Each item or assembly of items shall be furnished completely piped for connection to services. Control valves and devices shall be provided. Equipment requiring domestic water for non-potable use shall be provided with backflow preventer acceptable for intended use by local governing authorities.
5. Electrical:
   a. General: Each item or assembly of items shall be furnished completely wired to individual terminal blocks for connection to single branch electrical circuit. All electrical accessories and controls required by equipment shall be furnished. Provide terminal blocks for controls and interlocks not included in equipment package. Manual and magnetic starters shall have ambient compensating running overcurrent protection in all ungrounded conductors. Magnetic starters shall be manual reset, shall have H-O-A switches and auxiliary contacts. Controllers and other devices shall be in NEMA 1 or 3R enclosures as applicable.
   b. Wiring: Conductors, conduit, and wiring shall be in accordance with Electrical Specifications. Individual items within assembly shall be separately protected with dead front, fused disconnect, fuse block, or circuit breaker for each ungrounded conductor, all accessible on operating side of equipment. Switches, contacts and other devices shall be in ungrounded conductors.
   c. Motors: Shall be rated, constructed and applied in accordance with NEMA and ANSI Standards without using service factor. Single-phase motor shall be of type to suit application. Three-phase motors shall be open drip proof, NEMA B design on pumps and fans, NEMA C on reciprocating equipment, sealed ball bearing, three-phase induction unless otherwise noted. Design shall limit starting inrush current and running current to values shown on drawings. Motors 1 horsepower and larger shall be the premium efficiency type, tested according to IEEE Standard 112, Method B. Motors exposed to weather shall be TEFC. Motors in a fan air stream shall be TEFC or TEAO. Vertical motors outdoors shall be ODP or TEFC and shall have rain caps.
   d. Starters: Motor starters shall be furnished for all equipment except where starter is in a motor control center as designated on the electrical drawings. Deliver starter to Electrical Contractor for installation and wiring.
   e. Control Voltage: Equipment connected to greater than 240 volts shall be provided with 120 volt control circuit from integral protected transformer if separate source is not indicated on plans. 240 volt control is acceptable if confined within control panel.
   f. Submittals: Included in shop drawings shall be internal wiring diagrams and manufacturer's recommended external wiring.
6. Fan Selection - Static Pressure: Unless otherwise noted, pressure scheduled as external static pressure (ESP) includes all ductwork and accessory losses external

to the unit housing. Unless otherwise noted, pressure scheduled as total static pressure includes all ductwork, filter, coil, cabinet, damper and other accessory losses. Unless otherwise noted, pressure scheduled as duct static pressure includes all supply and return ductwork and accessory losses external to the unit housing and plenum (as applicable). The allowance for filter losses is 0.3" WC, unless otherwise noted. Submit itemized static pressure losses for all components.

7. Filters:
   a. General: Tested and rated in accordance with ASHRAE Standard 52.2 and Title 24, C.C.R. Furnish and install one complete change of all filters after air balance is completed and prior to acceptance.
   b. Filter Media: 2" media. MERV-11. Clean filter resistance 0.25" water at 500 fpm. Throw-away frame. Class 2. Camfil AP-Eleven.
8. Screens: All duct or louver openings to the outside shall be covered with 1/2", 16-gage, galvanized wire mesh screen.
9. Mixing Dampers: Opposed blade, 16-gage. Six-inch maximum blade width, 48" maximum length. Nylon or oil impregnated bronze bearings. One-half inch diameter pin shaft. 16-gage channel frame. One percent maximum leakage at 4" WC in accordance with AMCA 500 for outside air dampers. Actuating rod out of air stream. Arrow.
10. Sound Ratings: Shall be in accordance with ASHRAE 36 - 72. Sound ratings shall not exceed scheduled values.
11. Drives: Unless noted as direct connected, drives shall be V-belt, rated at 150% of motor horsepower. Multiple drive belts shall be matched set. Drive sheaves shall be dynamically balanced, adjustable, range +/- 10%, selected at mid range. Adjustable relative movement shall be lockable to shaft. Belts shall be aligned within 1-1/2 degrees at all times. Open drives shall be provided with OSHA approved open mesh belt guards. Belt guards exposed to weather shall be weatherproof enclosure with louvered face for adequate ventilation. Driving motor shall be mounted on adjustable rails. T.B. Woods, Browning. Submit RPM range of driven machine with drive selection.

B. Split System Heat Pump (IDU/ODU):
1. General: Refer to Paragraph 2.6A for General Requirements. Completely assembled and factory tested. Provide all starters and relays required for operation. All components by same manufacturer. Trane.
2. Outdoor Unit:
   a. Compressor: Sealed hermetic rotary compressor with vibration isolator mountings. Crankcase heater, suction line accumulator, recycling timer. High and low head pressure/temperature protection. Motor overload protection, low ambient feature to 20F cooling mode. High and low side service valves. Recycling timer. Single phase start assist kit. 5-year extended warranty.
   b. Fan and Coil: Finned tube non-ferrous coil. Propeller type fan, 1200 RPM maximum, direct drive. Totally enclosed motor, overload protected, permanently lubricated, resiliently mounted.
   c. Cabinet: Weatherproof, factory paint.
3. Indoor Unit:
   a. Supply Fan: Direct drive, multi-speed forward curve, centrifugal fan, resiliently mounted. Thermally protected motor.

b. Indoor Coil: Copper tube, aluminum fin, DX coil.
c. Electric Heaters: Integral part of unit, complete with all operational and safety controls, single point wiring terminal, 5-year factory warranty, UL listed as a complete unit.
d. Condensate Pan: Install under complete coil area with drain connections.
e. Filter: Washable media. Class 2 or better.

4. Controls: Microprocessor control containing temperature selection, room temperature indication, automatic cooling/heating changeover, malfunction alarm, power failure automatic restart safety, and emergency operation function.

C. Exhaust Fan:

1. General: All exhaust fans shall be tested and rated in accordance with AMCA Standard 210. Fans exposed to weather shall have ventilated weatherproof housing over motor and drive assembly. Refer to Paragraph 2.6A for General Requirements. All direct drive fans shall be provided with unit mounted speed controllers. All exhaust fans shall have a disconnect switch. All motors 1 horsepower and larger shall be the premium efficiency type.
2. Ceiling Fan: Direct driven, centrifugal exhaust fan. Fan wheel housing and integral outlet duct shall be galvanized steel or injection molded from a specially engineered resin exceeding UL requirements for smoke and heat generation. Outlet duct shall have an aluminum backdraft damper with continuous aluminum hinge rod. Inlet box shall be minimum 22 gauge galvanized steel. Motor shall be isolation mounted to a one piece galvanized stamped steel integral motor mount/inlet. Provide a field wiring compartment with disconnect receptacle. Provide an adjustable prepunched mounting bracket to accommodate different ceiling thickness. Provide a powder painted white aluminum egg-crate grille. Unit shall be designed with provision for field conversion from ceiling to in-line. Wheel shall be centrifugal forward curved type, injection molded of polypropylene resin. Motor shall be open drip proof type with permanently lubricated sealed bearings and include impedance or thermal overload protection and disconnect plug. Greenheck.
3. Roof Fan: Spun aluminum, roof mounted, direct driven, downblast centrifugal exhaust ventilator. Fan shall be of bolted and welded construction utilizing corrosion resistant fasteners and stainless steel fasteners on cap. Spun aluminum structural components shall be constructed of minimum 16 gauge marine alloy aluminum, bolted to a rigid aluminum support structure. Aluminum base shall have continuously welded curb cap corners for maximum leak protection. Discharge baffle shall have a rolled bead for added strength. An integral conduit chase shall be provided through the curb cap and into the motor compartment to facilitate wiring connections. Motor shall be enclosed in a weather-tight compartment, separated from the exhaust airstream. Unit shall bear an engraved aluminum nameplate. Wheel shall be centrifugal backward inclined, constructed of 100% aluminum, including a precision machined cast aluminum hub. An aerodynamic aluminum inlet cone shall be provided for maximum performance and efficiency. Motor shall be heavy duty type with permanently lubricated sealed bearings and furnished at the specified voltage, phase and enclosure. Backdraft damper. Greenheck.

D. Air Conditioning Unit:

1. General: Self-contained heating/cooling unit designed for outdoor installation. Factory assembled and tested. Refer to Paragraph 2.6A for general requirements. Provide all starters and relays required for operation. 24-volt control circuit from integral transformer. Weatherproof cabinet, galvanized steel with enamel finish. Outside air inlet. Drain pan. Multivane centrifugal supply fan. ARI certified. Gas equipment AGA certified. Trane, Rheem, Ruud.
2. Refrigeration: Sealed hermetic compressor with internal vibration isolating mount. Crankcase heater, high/low pressure switch, recycling timer. Air-cooled condenser with propeller fan. Non-ferrous finned coil. Low ambient control to 45ºF. Single phase units shall have compressor start assist kit. 5-year extended warranty on compressor(s).
3. Heat: Natural gas fired. Low NOx. Aluminized or ceramic coated welded steel heat exchanger. Electric ignition. Automatic gas valve. Fan and limit controls.

PART 3: - EXECUTION

3.1 PIPING INSTALLATION:

A. General:
1. Piping Layout: Piping shall be concealed in walls, above the ceilings, or below grade unless otherwise noted. Exposed piping shall run parallel to room surfaces; location to be approved by Architect. No structural member shall be weakened by cutting, notching, boring or otherwise, unless specifically allowed by structural drawings and/or specifications. Where such cutting is required, reinforcement shall be provided as specified or detailed. All piping shall be installed in a manner to ensure unrestricted flow, eliminate air pockets, prevent any unusual noise, and permit complete drainage of the system. All piping shall be installed to permit expansion and contraction without strain on piping or equipment. Vertical lines shall be installed to allow for building settlement without damage to piping. Lines shall be adequately braced against vertical and lateral movement. Pipe sizes indicated on the drawings are nominal sizes unless otherwise noted. Pipe sizes shall not decrease in direction of flow, unless otherwise noted.
2. Joints:
   a. Threaded: Pipe shall be cut square, and reamed to full size. Threads shall be in accordance with ANSI B2.1. Joint compound or tape suitable for conveyed fluid shall be applied to male thread only. Joints shall be made with three threads exposed.
   b. Brazed: Filler rod shall be of suitable or the same alloy as pipe. Brazing filler metal shall have a minimum melting point of 1100ºF. Brazing shall be performed by a Certified Brazer as certified by an organization / institution that uses standards recognized by the American Welding Society (AWS) and meets the requirements of the ASME Boiler and Pressure Vessels Code, Section 9.
   c. Open Ends: Open ends of piping shall be capped during progress of work to preclude foreign matter.
3. Fittings and Valves:
   a. Standard Fittings: All joints and changes in direction shall be made with standard fittings. Close nipples shall not be used.

b. Reducers: Pipe size reduction shall be made with bell reducer fittings. Bushings shall not be used.

4. Pipe Support:
   a. General: Hangers shall be placed to support piping without strain on joints or fittings. Maximum spacing between supports shall be as specified below (based on straight lengths of pipe with couplings only). Provide additional supports for equipment, valves or other fittings. Seismic requirements may reduce maximum spacing. Actual spacing requirements will depend on structural system. Refer to drawings for additional requirements and attachment to structure. Side beam clamps shall be provided with retaining straps to secure the clamp to the opposite side of the beam. Vertical piping shall be supported with riser clamp at 20' on center (maximum). Support pipe within 12" of all changes in direction.
   b. Refrigerant Piping: Support insulated refrigerant line with construction channel and sheet metal support saddle or Cooper B-Line Armafix clamps. 5' spacing. Use isolation shield for uninsulated pipe. When using pre-charged tubing, all changes of direction shall be made with bending tools producing neat uniform bends. Free hand bends will not be accepted.
   c. Trapeze: Trapeze hangers of construction channel and pipe clamps may be used. Submit design to Engineer for review.
5. Miscellaneous:
   a. Escutcheons: Provide chrome plated escutcheons where piping penetrates walls, ceilings, or floors in finished areas.
   b. Pipe Sleeves: All piping passing through concrete or concrete block shall be provided with pipe sleeves. Allow 1" (nominal) clearance between sleeve and pipe or pipe insulation.
   c. Pipes Passing through Fire Rated Surfaces: Pipes passing through fire rated walls, floors, ceilings, partitions, etc. shall have the annular space surrounding the pipe or pipe insulation sealed with fire rated materials in accordance with the requirements of 2016 CBC Section 714.

B. Refrigerant Piping: Pipe shall be cut square. Joint surfaces shall be thoroughly cleaned, fitted and erected before brazing. Continuously purge with Nitrogen during brazing. After installation, evacuate to 29 inches of mercury, ambient temperature during evacuation shall not be less than 70ºF. After evacuation, fill with dry nitrogen to 250 psi and maintain for two-hour period without additional charge. After nitrogen test, purge with refrigerant charged through dryer and maintain holding charge in system and equipment. Refrigerant piping below grade shall be run in 4" (min.) PVC conduit with long radius ells. Seal ends of conduit watertight.

3.2 PIPING INSULATION INSTALLATION:

A. Refrigerant Piping: Cover piping with foamed plastic insulation. Longitudinal and end seams shall be thoroughly cemented with adhesive in accordance with manufacturer's recommendations. Cover all fittings, unions, valves and connections. Piping exposed to view shall be covered with PVC jacketing. Piping exposed to weather shall be covered with aluminum jacketing, install all joints and seams to prevent water entry, seal with 1/8” bead of gray metal jacketing sealant.

3.3 DUCTWORK INSTALLATION:

A. General:

1. Standards: Unless otherwise noted, all ductwork shall be constructed and installed in accordance with current SMACNA Standards. Ductwork shall be built to a pressure classification equal to or greater than the maximum operating pressure at that point in the ductwork. A copy of these standards shall be maintained at the job site at all times. Duct work and accessories shall be installed in a manner to prevent vibration and rattling.
2. Access: Provide duct access doors as required to adjust equipment and dampers. Provide wall or ceiling access panels, or remote actuators as required where equipment and dampers are not otherwise accessible. Remote regulator shall be as detailed on drawings.
3. Flanges and Escutcheon: Where ductwork penetrates walls, ceilings, or floors, furnish and install flange or escutcheon of same material as duct.
4. Flexible Connections: Connection of ductwork to any vibrating equipment shall be with 3" (min.) flexible connection. Install with ample slack and uniform gap. There shall be no metal to metal contact across flexible connection. Flexible connections exposed to weather shall have a protective sheet metal cover.

B. Low Velocity-Low Pressure (up to 2,000 ft/min and up to 2.0 in water):

1. Sheet Metal Ductwork:
   a. Ells: Ells with less than standard radius and square ells shall be fitted with turning vanes.
   b. Tees: Tees in supply ductwork shall be straight tap-in with extractor or 45 degree take-off as shown on drawings. Grilles or branches in supply ductwork shall be a minimum of 8 duct diameters downstream of tees.
   c. Duct Joints and Seams: All joints and seams which are not exposed to weather shall be sealed airtight with duct sealant. All joints and seams exposed to weather shall be sealed air and water tight with outdoor sealant. (See Part 2 of this Specification). All joints on metal ductwork exposed to view inside building shall be sealed air tight with grey duct sealant.
   d. Dampers: Install volume control damper and damper regulator in all branch ducts.
2. Flexible Glass Fiber Ductwork: The use of flexible duct is limited to the last 5 feet of each branch duct (i.e. one 5 foot section of flexible duct may be used to connect the grille to the sheet metal branch duct). No joints are permitted in this 5' length. Hangers shall be 4" wide metal straps spaced to prevent sagging, 42" spacing maximum. Insert 6" wide fiberglass pad between duct and hanging strap. Joints shall be installed with stainless steel or nylon draw bands, Duro Dyne Dyn-O-Tie. Minimum turn radius shall be in accordance with SMACNA Standards (turn radius of duct centerline not less than 1.5 times the duct diameter).
3. Spiral Wound Metal Ductwork: At side duct grilles, the grille shall be cut directly into the spiral duct. Duct to duct joints shall be made with the spiral seam rotated so that the seam forms a continuous helical pattern across the joint.

3.4 AIR TERMINALS AND DUCT FITTINGS INSTALLATION:

A. General: Unless otherwise noted, all air terminals and duct fittings shall be installed in accordance with current SMACNA Standards. Terminals and fittings shall be installed in a manner to prevent vibration and rattling. Metal surfaces exposed to view behind grilles and registers shall be painted flat black.

3.5 DUCTWORK INSULATION INSTALLATION:

A. General: Insulate all sheet metal supply, return and outside air intake ductwork except as noted below. Insulation shall be continuous through walls and floors except at fire dampers.

B. Where Insulation Is Not Required: Do not insulate factory-insulated ducts or casings, acoustic lined ducts, fibrous glass ducts, underground ductwork, supply or return ductwork exposed to view in the space that it serves, or exhaust ductwork.

C. Concealed Ductwork: Wrap concealed ductwork including outside air intakes with fiberglass blanket lapped 2" minimum. Secure with staples 4" on centers maximum on straight runs and 3" maximum at elbows and fittings. Insulation on bottom of ducts wider than 36" shall also be secured with mechanical fasteners at 24" on center.

D. Acoustic Lining: Unless otherwise indicated, all supply and return ductwork in equipment rooms, all ductwork exposed to weather and other ducts as indicated on drawings, shall have acoustic lining. Do not acoustic line outside air intakes. Where acoustic lining is installed, increase each sheet metal dimension to accommodate lining and maintain clear inside duct dimensions shown on drawings. Apply lining with bonding adhesive in accordance with manufacturer's recommendations and also secure with mechanical fasteners in accordance with SMACNA Standards. Seal exposed edges of lining with bonding adhesive.

3.6 EQUIPMENT INSTALLATION:

A. General: It shall be the responsibility of the equipment installer to ensure that no work done under other specification sections shall in any way block or otherwise hinder the equipment. All equipment shall be securely anchored in place. All equipment shall be installed level.

B. Connections to Equipment: Where size changes are required for connections to equipment, they shall be made immediately adjacent to the equipment and, if possible, inside the equipment cabinet.

C. Equipment Platforms: Shall be as shown on drawings and as follows: Flashing and platform cover shall be 22 gage (min.) sheet metal. All joints and seams shall be soldered with 2" (min.) overlaps. Provide 3/4" gap around perimeter between roofing and platform cover to facilitate re-roofing. Extend drip lip down 3" (min.). Provide 30# felt under platform cover.

3.7 TESTS AND ADJUSTMENTS:

A. General: Unless otherwise directed, tests shall be witnessed by a representative of the Architect. Work to be concealed shall not be enclosed until prescribed tests are made.

Should any work be enclosed before such tests, the Contractor shall, at his expense, uncover, test and repair all work to original conditions. Leaks and defects shown by tests shall be repaired and entire work retested.

3.8 SYSTEM ENERGY BALANCE:

A. Scope: Provide the services of an independent test and balance agency to test, adjust and balance, retest and record performance of the system to obtain design quantities as specified. The agency must prove that they have no affiliation with any equipment manufacturer, design engineer, installing contractor, or any other party which might lead to a conflict of interest, in order to provide an unbiased, third party system balance and report.

B. Qualifications: Prior to commencing work, the agency shall be reviewed by the Engineer and shall be certified by the Associated Air Balance Council, National Environmental Balancing Bureau or Testing, Adjusting and Balancing Bureau. The agency shall provide documentation of having successfully completed at least five projects of similar size and scope.

C. Instruments: All instruments shall be accurately calibrated; calibration histories shall be available for examination. Application of instrumentation shall be in accordance with AABC, NEBB or TABB standards.

D. Submittals: Include in shop drawings copies of forms to be used for testing and balancing showing all data which is to be recorded. Three copies of completed balance report shall be submitted to and reviewed by the Mechanical Engineer prior to the final mechanical construction review.

E. Procedure - General: Procedure shall be in accordance with Associated Air Balance Council's "National Standards for Field Measurements and Instrumentation - Total System Balance", Volume Two, No. 12173, or equivalent NEBB or TABB standards. System shall be in full, continuous operation during test. Balanced quantities shall be plus 10%, minus 0% of design quantities. All nameplate data, manufacturer, model and serial numbers shall be recorded for each item tested.

F. Extended Warranty: The test and balance agency shall include an extended warranty of 90 days after completion of test and balance work, during which time the Engineer, at his discretion, may request a recheck or resetting of any item or items in test report. The agency shall provide technicians to assist the Engineer in making any tests he may require during this period of time.

G. Air Balance Procedure (For Each Air Handling System):
1. All air filters shall be clean when air balance is performed.
2. Provide a sketch of the equipment showing exactly where all pressure readings were taken.
3. Adjust blower RPM to design requirements.
4. Record motor full load amperes.
5. Make pitot tube traverse of main supply and return ducts and obtain design CFM at fans.
6. Record system static pressures, inlet and discharge.

7. Record filter quantity, size(s) and pressure drop across filter(s) at each filter bank.
8. Adjust system for design CFM recirculated air.
9. Adjust system for design CFM outside air.
10. Record entering air temperatures. (DB heating, DB and WB cooling.)
11. Record leaving air temperatures. (DB heating, DB and WB cooling.)
12. Adjust all main supply and return air ducts to design CFM.
13. Adjust all zones to design CFM, supply and return.
14. Adjust all diffusers, grilles and registers to plus 10%, minus 0% of design requirements.
15. Adjust CFM at all exhaust fans, make-up units, etc. (high and low speed, where applicable). Record applicable data from items 1 through 11 above.
16. Each grille, diffuser and register shall be identified as to location.
17. Verify proper diffusion pattern for all ceiling grilles and that all sidewall grilles are set for 5 degrees upward deflection unless otherwise noted. Make a notation of any that are not set properly.
18. Size, type and manufacturer of diffusers, grilles, registers and all tested items shall be identified and listed. Manufacturer's ratings shall be used to make required calculations on all items.
19. Readings and tests of diffusers, grilles, and registers shall include required FPM velocity and test resultant velocity, required CFM and test resultant CFM after adjustments.
20. In cooperation with the control manufacturer's representative, set adjustments of automatically operated dampers to operate as specified. Testing agency shall check all controls for proper calibrations and list all controls requiring adjustment by control installers.
21. All diffusers, grilles and registers shall be adjusted for required air patterns and to minimize drafts.
22. As a part of the work of this contract, THE AIR CONDITIONING CONTRACTOR shall make any changes in pulleys, belts and dampers or the addition of dampers required for correct balance as recommended by air balance agency, at no additional cost to Owner.
23. Set, test and adjust packaged heating/cooling unit economizer operation in cooperation with controls contractor. Record minimum and maximum outside and exhaust airflows.

END OF SECTION

SECTION 230923 - BUILDING AUTOMATION SYSTEM (BAS) – F.U.S.D.

PART 1 - GENERAL

1.01 DESCRIPTION

A. The intent of this document is to describe a system that is complete in every respect without further cost to the Owner. Anything not shown on the drawings or indicated in the specifications, and required for complete operating systems, shall be included as part of this Work. This will also include all connections to new services.

B. All parts of the plans and specifications fully apply when applicable to work of this Division. No attempt has been made to divide the work between the various trades or subcontractors.

C. OPERATION: The entire Building Automation System (BAS) shall be comprised of a network of interoperable, stand-alone digital controls communicating on the Niagara AX/N4 open protocol communication network to a host computer communicating via the internet to the FUSD host computer. The BAS shall communicate to third party systems such as chillers, boilers, air handling systems, energy metering systems, other energy management systems, access control systems, fire-life safety systems and other building management related devices with open, interoperable communication capabilities.

D. Work specified by others:

1. HVAC Subcontractor:

   a. Installation of automatic control dampers, smoke control dampers, and necessary blank off plates.

   b. Access doors where required.

   c. Installation of impression wells and pressure taps.

   d. Installation of flow switches.

   e. Installation of automatic control valves.

   f. Installation of pressure taps and associated shut-off cocks. Pete’s plugs shall be installed next to each temperature and pressure sensor.

2. Electrical Subcontractor:

   a. Electrical work shall, in general, comply with the following:

      1) Electrical work may include both line-voltage and low-voltage wiring, as required.

      2) All electrical work shall comply with the latest California Electrical Code and local electrical codes.

      3) All safety devices shall be wired through both hand and auto positions of motor starting device to insure 100% safety shut-off.

4) All magnetic starters for mechanical equipment shall be furnished with integral 120V control transformers, sized to handle the additional VA needed for the controls - pilots, EP valves, etc. All motor starters to be NEMA rated; no IEC rated starters.

5) The motor starter supplier shall provide auxiliary contacts as required for interlock by BAS Contractor; the supplier shall estimate an allowance of at least one auxiliary contact per starter. All interlock and control wiring shown on the electrical prints is by the electrical subcontractor.

1.02 QUALITY ASSURANCE

A. Minimum Contractor Qualifications:

1. BAS Contractor; programs software and ensures network compatibility with all hardware as specified within, and the following requirements:

a. Hold a Niagara AX/N4 Framework Certification for at least two years, obtained from a Tridium certified training facility, no exceptions.

b. Shall have installed a minimum of three functioning networked systems.

c. Must provide a list of at least three projects of similar scope and cost, list to include:

1) Project name / School District.

2) Contact name and phone number.

2. Controls Contractor: Installs all hardware controls as specified within, and the following requirements:

a. A minimum of three installed and operational Building Automation Systems (BAS) with the Niagara AX/N4 Framework within the last five years.

b. A minimum of five years experience in servicing a networked BAS.

c. Must provide a list of at least three projects of similar scope and cost, list to include:

1) Project name / School District.

2) Contact name and phone number.

B. Response Requirements: The BAS Contractor shall provide a 24-hour emergency response service with a dedicated telephone number. The BAS contractor shall guarantee a 2-hour maximum response time by a Niagra AX/N4 certified service technician. Fresno Unified reserves the right to obtain services and repairs from any BAS company when the 2-hour response time has been exceeded. The BAS contractor agrees by submittal of his/her bid to pay a late penalty to the District at a rate of $75 per every half-hour interval exceeding the 2-hour response limit. The District reserves the right to implement a late penalty on a call-by-call basis, depending on the nature of the emergency service call, at the District's discretion.

C. Accountability: The District intends to document all service calls to ensure service provided has met the District's expectations as specified. Substandard service or conduct

may result in the District certifying the Contractor as non-responsive and potentially eliminate the Contractor from bidding on future projects. During the warranty period, if the BAS is not fully functional and requires a service call, the District shall not be limited by any exclusivity arrangement between the BAS or Controls Contractor at any time.

1.03 CODES, STANDARDS, ORDINANCES AND REGULATIONS

A. All work and materials shall be in full accordance with the latest rules and regulations of applicable codes as amended and adopted by any governmental agency which has jurisdiction over this work. Nothing in these Plans or Specifications is to be construed to permit work not conforming to these codes. Should the Plans or Specifications call for material, methods, or construction of a higher quality or standard than required by the above rules, the higher quality shall govern.

B. When not contradicting the above, the manufacturers' recommendations along with applicable parts of the following documents shall be the basis for quality and technique of installation.

1. Title 24, California Administrative Code, all parts.
2. Applicable publications of the National Fire Protection Association (NFPA), and the National Electrical Code (NEC).
3. Applicable publications of the American Society of Heating, Refrigerating and Air Conditioning Engineers, Inc. (ASHRAE).

1.04 SITE CONDITIONS AND LOCATIONS

A. The general location and arrangement of system hardware is shown on the drawings. Information on the drawings relative to existing services is approximate only. Minor adjustments required to conform to actual locations shall be made without additional cost to Owner. The Controls Contractor shall, as work progresses, verify the dimensions of the spaces available for the installation of the work and he shall assume full responsibility for the proper locations of each portion thereof.

B. The construction documents are generally diagrammatic and the locations indicated may be approximate only. They do not show every offset, bend, or elbow required for installation in the space provided. The Controls Contractor, therefore, shall install all equipment, conduit runs and the like as follows:

1. Adhere to the location indicated as near as possible.
2. Maintain ample head room and access in all passageways, clearance around all equipment and under conduit runs for unrestricted passage and for easy servicing of all apparatus, equipment, devices and the like.
3. Provide access for maintenance of all equipment.

1.05 SUBMITTALS

A. Control Submittal: Within 30 calendar days after award of the contract, and before any materials of this Section are delivered to the job site, submit:

1. The BAS Contractor shall submit description of operation and schematic drawings of the System to the Architect/Engineer for approval before starting work on-site. At least eight sets of submittals shall be sent through channels.
2. Product data submittals must be complete and in a single bound document for all items supplied in this Division. Each document shall be bound with an index and marked with the equipment identification as specified in the Plans and Specifications.
3. Provide complete control shop drawing including equipment, control devices, point to point connections with terminal numbers, and any details necessary for a complete control drawing.
4. List of name plates to be engraved, showing each name plate wording and location.

1.06 REMOVAL AND SALVAGE

A. Pre-Demolition conference: Contractor shall schedule a walk-through meeting with Energy Management Department to conduct an inventory on items to be removed and salvaged from the existing building under construction.

B. Inventory List: The Contractor shall complete and submit an inventory list of items that have been removed and salvaged to the Energy Management Department and store items in a cool dry and protected area.

C. Delivery: Delivery of the salvaged items shall be determined by the Energy Management Department and the Contractor.

D. Remove and Reinstall: Detach items from existing location and store them for reinstallation in a strategic area of operation to be determined.

1. Identify areas of occupancy to remain in-use and functional.
2. If existing BAS is required to be removed, relocated, or abandoned, before proceeding with the demolition provide temporary power and communication that bypasses the area of demolition and that maintains the continuity of the BAS to other occupied parts of the site or building construction.

E. Schedule of Demolition Activities: Indicate the following:

1. Detailed sequence of demolition and removal work, with starting and ending dates for each activity. Ensure on-site operations of the occupied areas of the BAS are not interrupted.
2. If there is to be an interruption in the operation of the existing BAS, Contractor shall notify Architect & District Project Manager and indicate how long the services will be interrupted in writing.

1.07 CLOSE-OUT DOCUMENTS

A. Record Documents:

1. At completion of project, BAS Contractor shall provide to the Architect/Engineer all As-Built drawings, communications and controller map, wiring diagrams, equipment specifications, Operations and Maintenance Manuals and other documentation as required to describe the system. At least four sets of operations and maintenance manuals with “as-built” drawings, parts lists, etc. shall be provided at job completion.
    a. Hard copies shall be stamped with “Record Drawings”.
    b. Provide all Record Documents on a CD; including pdf files and CAD files using AutoCAD 2008 or latest version.
2. During progress of the work, maintain an accurate record of all changes made in the systems from those shown on the drawings, specifications and submittals.
3. Revise Shop Drawings and provide on reproducible media and in DWG format compatible Windows operating systems and Autocad 2008 or latest version.

B. Communications and Controller Map: To include the following;
1. A detailed communication routing map showing entering and exiting locations
2. A detailed list of controller locations by room number and location.
3. Permanantly attach the communication routing map and controller locations inside the NAC control panel.

C. Operations and Maintenance Manuals: Upon completion of the work, a complete bound book containing the following information shall be submitted to the Architect/ Engineer:
1. Complete catalog and performance data on all control devices, including all documents included in submittals.
2. Complete manufacturers' operating and maintenance instructions on all control devices.
3. Complete wiring and control diagrams for all equipment and systems, including list of materials, description of operation and system flow diagrams.
4. Manufacturers' warranty certificates on all equipment.
5. Contractor's warrantee letter.

1.08 GUARANTEE

A. The Contractor shall warrantee in writing all work performed under this contract for a period of two years from the date of notice of completion.

B. When notified of a system failure relating to the work performed under this contract, the Contractor will be responsible for all investigation, diagnoses, repair, revision or replacement necessary to correct the condition.

PART 2 - PRODUCTS

2.01 GENERAL PRODUCT DESCRIPTION

A. The Building Automation System (BAS) shall be capable of integrating multiple building functions, including equipment supervision and control, alarm management, energy management, and trend data collection. System shall be Johnson Controls FX-80 Web based front end with Johnson Controls devices and controllers. BACnet, N2 must reside in controller and Open licensing shall be included in each FX80 device. Programming of the FX-80 and creating all required dynamic graphics shall be included in this section.

B. The BAS shall consist of the following:

1. Local Display Devices – PC Touchscreen.
2. Distributed User Interfaces.
3. Network processing, data storage and communications equipment.
4. DC Controllers (HVAC etc).
5. Other components required for a complete and working BAS.

C. The system shall be modular in nature, and shall permit expansion of both capacity and functionality through the addition of sensors, actuators, ASCs, and operator devices. Controllers shall be provided a 10% spare point capacity for all necessary applications.

D. System architectural design shall eliminate dependence upon any single device for alarm generation and control execution. The failure of any single component or network connection shall not interrupt the execution of control strategies at other operational devices.

E. Acceptable Systems:

1. Facility Explorer by Johnson Controls is the District Standard using the BACnet MSTP protocol to integrate into the District's existing server (JCI).
2. No substitutions allowed.

2.02 CONDUIT AND WIRING

A. Control Contractor shall provide and install all low voltage conduit and wiring for DDC system as required for a complete and operating system. Conduit and wiring shall conform to Division 16 requirements.

B. Wiring:

1. BACnet communications cable shall be Connect Air: W223C-2144FCBJC 22-3C (Blue Jacketed). Install per manufacturer's recommendations. No splices, Tee's, or cuts of any kind will be allowed. Identify both ends at terminal blocks, field devices, and sensors. All wiring that is routed below grade shall be W221P-1003PE (Outdoor Polyethylene BACnet-Black).
   a. Communication Loop and sensors must be run in separate conduits and junction boxes.
   b. The outside air sensor must be brought into the NAC I/O at all times. An outside air sensor brought into a controller is not acceptable.
2. Sensor wire shall be: Connectair Part # W181P-2040PRB 18-2 (Purple).

3. Analog Output shall be: W184C2059PINK 18-4 (Pink).
4. Thermostat wire shall be Connect Air: W224C-2020WHT 22-4C (White Jacketed).
5. Cable routed in accessible ceiling spaces shall comply with EIA/TIA standards for communications cabling. Communication bus wire shall be W223C-2144FCBJC 22 3C (Blue Jacketed) Connect Air, blue jacketed shielded cable.

C. Conduit: Conduit shall be minimum 1 inch diameter except that minimum conduit size for 120 volt power shall be 3/4-inch. For underground conduit, provide 100% spare capacity by installing a second conduit (empty) along all conduit routes. All conduits shall be sized as follows: Size per the CEC (NEC with California Amendments) and then oversize by one size. All conduits shall be RGSC (Rigid galvanized steel conduit) only. All fittings shall be steel/not malleable or aluminum.

2.03 BAS ARCHITECTURE

A. Automation Network

1. The automation network shall be configured as a Client/Server network with a web server operating on the Clients LAN/WAN. The web browser interface is extended over the LAN/WAN. Monitoring and control of the BAS is available using the web browser interface.
2. The automation network shall include the option of a PC industry standard of Ethernet TCP/IP. Where used, LAN controller cards shall be standard “off the shelf” products available through normal PC vendor channels.
3. The BAS shall network multiple user interface clients, system controllers and systems supervisors(s) as required for systems operation.
4. The automation network option shall be capable of operating at a communication speed of at least 100 Mbps or more.
5. The automation network option will be compatible with other enterprise-wide networks. Where indicated, the automation network shall be connected to the enterprise network and share resources with it by way of standard networking devices and practices.

B. Control Network:

1. Control networks shall provide either “Peer-to-Peer,” Master-Slave, or Supervised Token Passing communications, and shall operate at a minimum communication speed of 9600 to 76,800baud.
2. Digital Controllers shall reside on the control network via either BACnet MSTP or Zigbee wireless Smart Mesh.

C. Integration:

1. Hardwired
   a. Analog and digital signal values shall be passed from one system to another via hardwired connections.

b. There will be one separate physical point on each system for each point to be integrated between the systems.

2. Direct Protocol (Integrator Panel)

a. The BAS system shall include appropriate hardware equipment and software to allow bi-directional data communications between the BAS system and 3rd party manufacturers' control panels. The BAS shall receive, react to, and return information from multiple building systems, including but not limited to the chillers, boilers, variable frequency drives, and power monitoring system.

b. All data required by the application shall be mapped into the BAS system, and shall be transparent to the operator.

c. Point inputs and outputs from the controllers shall have real-time interoperability with BAS software features such as: Control Software, Energy Management, Custom Process Programming, Alarm Management, Historical Data and Trend Analysis, Totalization, and Local Area Network Communications.

2.04 USER INTERFACE

A. Browser Based Interface

1. The system shall be capable of supporting an unlimited number of clients using standard Web browser such as Internet Explorer$_{TM}$, Google Chrome and Mozilla Firefox. Systems requiring additional software (to enable a standard Web browser) to be resident on the client machine, or manufacture-specific browsers shall not be acceptable.

2. The Web browser software shall run on any operating system and system configuration that is supported by the Web browser. Systems that require specific machine requirements in terms of processor speed, memory, etc., in order to allow the Web browser to function with the Building Automation System (BAS), shall not be acceptable.

3. The Web browser client shall support at a minimum, the following functions:

a. User log-on identification and password shall be required. If an unauthorized user attempts access, notice of access failure shall be displayed. Security using authentication and encryption techniques to prevent unauthorized access shall be implemented.

b. HTML programming shall not be required to display system graphics or data on a Web page. HTML editing of the Web page shall be allowed if the user desires a specific look or format.

c. Storage of the graphical screens shall be in the Network Area Controller (NAC), without requiring any graphics to be stored on the client machine. Systems that require graphics storage on each client are not acceptable.

d. Real-time values displayed on a Web page shall update automatically without requiring a manual "refresh" of the Web page.

e. Users shall have administrator-defined access privileges. Depending on the access privileges assigned, the user shall be able to perform the following:

1) Modify common application objects, such as schedules and setpoints in a graphical manner.

2) Commands binary objects to start and stop.

3) View logs and charts.

4) View alarms.

f. Graphic screens on the Web Browser client shall support hypertext links to other locations on the Internet or on Intranet sites, by specifying the Uniform Resource Locator (URL) for the desired link.

4. Alarms

a. Alarm feature shall allow user configuration of criteria to create, route, and manage alarms and events. It shall be possible for specific alarms from specific points to be routed to specific alarm recipients. The alarm management portion of the user interface shall, at the minimum, provide the following functions:

1) Allow configuration to generate alarms on any numeric, binary, or data point in the system.

2) Generate alarm records that contain a minimum of a timestamp, original state, acknowledged state, alarm class and priority.

3) Allow the establishment of alarm classes that provide the routing of alarms with similar characteristics to common recipients.

4) Allow a user, with the appropriate security level, to manage alarms - including sorting, acknowledging, and tagging alarms.

5. Reports and Summaries

a. Reports and Summaries shall be generated and directed to the user interface displays, with subsequent assignment to printers, or disk. As a minimum, the system shall provide the following reports:

1) All points in the BAS

2) All points in each BAS application

3) All points in a specific controller

4) All points in a user-defined group of points

5) All points currently in alarm

6) All BAS schedules

7) All user defined and adjustable variables, schedules, interlocks and the like.

b. Reports shall be exportable to .pdf, .txt, or .csv formats.

c. The system shall allow for the creation of custom reports and queries.

6. Schedules
    a. A graphical display for time-of-day scheduling and override scheduling of building operations shall be provided. At a minimum, the following functions shall be provided:
        1) Regular schedules
        2) Repeating schedules
        3) Exception schedules
    b. Weekly schedules shall be provided for each group of equipment with a specific time use schedule.
    c. It shall be possible to define one or more exception schedules for each schedule including references to calendars.
    d. Monthly calendars shall be provided that allow for simplified scheduling of holidays and special days. Holidays and special days shall be user-selected with the pointing device or keyboard.
7. Password
    a. Multiple-level password access protection shall be provided to allow the user/manager to user interface control, display, and database manipulation capabilities deemed appropriate for each user, Based on an assigned password.
    b. Each user shall have the following: a user name, a password, and access levels.
    c. The system shall provide the capability to require a password of minimum length and require a combination of characters and numerical or special characters.
    d. When entering or editing passwords, the system shall not echo the actual characters for display on the monitor.
    e. The system shall provide unlimited flexibility with access rights. A minimum of four levels of access shall be provided along with the ability to customize the system to provide additional levels.
    f. A minimum of 100 unique passwords shall be supported.
    g. Operators shall be able to perform only those commands available for their respective passwords. Display of menu selections shall be limited to only those items defined for the access level of the password used to log-on.
    h. The system shall automatically generate a report of log-on/log-off and system activity for each user.
    i. All log data shall be available in .pdf, .txt, and .csv formats.
8. Historical Data Collection
    a. All numeric, binary or data points in the system database shall allow their values to be logged over time (trend log). Each historical record shall include the point's name, a time stamp including time zone, and the point's value.

b. The Network Area Controller (NAC) shall have the ability to store its historical data records locally and periodically to a remote server on the network (archiving).

c. The configuration of the historical data collection shall allow for recording data based on change of value or on a user-defined time interval.

d. The configuration of the historical data collection shall allow for the collection process to stop or rollover when capacity has been reached.

e. A historical data viewing utility shall be provided with access to all history records. This utility shall allow historical data to be viewed in a table or chart format.

f. The history data table view shall allow the user to hide/show columns and to filter data based on time and date. The history data table shall allow exporting to .txt, .csv, or .pdf file formats.

g. The historical data chart view shall allow different point histories to be displayed simultaneously, and also provide panning and zooming capabilities.

9. Audit Log

a. For each log entry, provide the following data:

1) Time and date.

2) User ID

3) Change or activity: i.e., Change setpoint, add or delete objects, commands, etc.

10. Database Backup and Storage

a. The user shall have the ability to backup the System Controller databases.

11. Graphical User Interface Panel **(NIC)**

a. On Site GUI - System shall also include a touchscreen PC or District approved equal. GUI shall include the following features.

b. Kiosk mode – Powers up directly to the Niagara AX/N4 Station serving PX pages.

c. USB backup/restore/upgrades

d. Touch alarm console

e. Touch platform management

f. kitTouch – specialized widgets for touch applications

g. Licensed for Niagara Network, Modbus TCP Slave, BACnet / MSTP.

h. Touchscreen shall be no smaller than 15”, have a minimum native resolution of 1024 x 768 and shall be installed inside a panel. Panel shall be UL listed as a complete package located next to the NAC.

i. Mount the touch panel PC in NEMA 12 enclosure. Ventilate this enclosure with a low filtered ventilation inlet on one side and a high exhaust fan on the opposite side.

2.05 AUTOMATION NETWORK

A. Network Server **(NIC)**

1. F.U.S.D. District AX/N4 server is existing, BAS Contractor shall have the responsibility of bringing the firmware to current revisions. Any structures on the site with existing BAS that require this to match shall also be included in this project.

2. It shall be possible to provide access to all Network Area Controllers via a single connection to the server. In this configuration, each Network Area Controller can be accessed from the Graphical User Interface (GUI) or from a standard Web browser (WBI) by connecting to the server.

a. Distributed Control: The server shall provide the ability to execute global control strategies based on control and data objects in any NAC in the network, local or remote.

b. The server shall provide scheduling for all Network Area Controllers and their underlying field control devices.

c. The server shall implement the BACnet Command Prioritization scheme (16 levels) for safe and effective contention resolution of all commands issued to Network Area Controllers. Systems not employing this prioritization shall not be accepted.

d. Each Network Area Controller supported by the server shall have the ability to archive its log data, alarm data and database to the server, automatically. Archiving options shall be user-defined including archive time and archive frequency.

e. The server provides central alarm management for all Network Area Controllers supported by the server. Alarm management shall include:

1) Routing of alarms to display, printer, email and email compatible pagers

2) View and acknowledge of alarms

3) Query alarm logs based on user-defined parameters

f. The server shall provide central management of log data for all Network Area Controllers supported by the server. Log data shall include process logs, runtime and event counter logs, audit logs and error logs.

B. Network Area Controller (NAC) or JACE

1. The NAC must provide the following hardware features as a minimum:

a. Communications

1) One 10/100 Mb Ethernet Port – RJ-45 connection

2) Digital controllers that are hardwired shall reside on the BACnet MSTP control network.

3) Wireless Digital Controllers shall also reside on the control network via either BACnet MSTP, Zigbee wireless Smart Mesh.

4) Two RS-485 ports (up to 57,600 baud) shall be standard. Gateways or non-Johnson drivers not allowed.

5) All required protocol drivers are included. BACnet, Modbus and N2 shall be resident as standard without additional costs, additional hardware External gateways shall not be acceptable.

6) System shall also be capable of a Zigbee self-healing wireless mesh network. Antenna and driver shall reside in NAC controller as standard.

b. Inputs/Outputs

1) IO-16/34-REM-H Input/output modules shall be utilized for additional control devices.

c. Battery Backup

1) Micro-SD card with 4GB flash total storage/2GB user storage backup provided for all on board functions, including I/O.

d. Environment

1) Must be capable of operation over a temperature range of 0ºF to122ºF.

2) Must be capable of withstanding storage temperatures of between 0ºF and 150ºF.

3) Must be capable of operation over a humidity range of 5% to 95% RH, non-condensing.

e. Performance

1) FX-80 shall be licensed for sufficient devices for this project, plus all existing devices (as applicable), and an additional 15% (minimum) licenses for the future.

2) FX-80 shall be licensed with a 1 year software Maintenance Agreement.

3) If the existing District server is licensed for AX, then FX-80 shall be downgraded to AX.

2. The Network Area Controller (NAC) shall be a fully user-programmable device capable of providing all of the capability described in Section 2.3 Part A.

3. Automation network – The Network Area Controller (NAC) shall reside on the automation network. Each NAC shall support one or more sub-networks of controllers.

4. User Interface – Each Network Area Controller (NAC) shall have the ability to deliver a web based user interface as previously described. All computers connected physically or virtually to the automation network shall have access to the web based UI.

5. Power Failure – In the event of the loss of normal power, The Network Area Controller (NAC) shall continue to operate for a defined period after which there

shall be an orderly shutdown of all programs to prevent the loss of database or operating system software. Flash memory shall be incorporated for all critical controller configuration data.

a. Upon restoration of normal power and after a minimum off-time delay, the controller shall automatically resume full operation without manual intervention through a normal soft-start sequence.

b. Certification – All controllers shall be listed by Underwriters Laboratories (UL).

C. Application Specific Controllers (ACS's)

1. The ASC devices must provide the following hardware features as a minimum:

a. Communications:

1) Zigbee Wireless Mesh by Johnson controls Model# FX-ZFR1810, shall be installed where specified and shown on portable classroom installations.

2) Wireless Repeaters; Johnson Model#FX-ZFR1811 to be used in area as needed.

3) All other controllers shall be BACnet communicating PCG, PCV or PCA Johnson devices.

b. Environment:

1) Must be capable of operation over a temperature range of 0ºF to 122ºF.

2) Must be capable of withstanding storage temperatures of between 0ºF and 158ºF.

3) Must be capable of operation over a humidity range of 5% to 95% RH, non-condensing.

2.06 SOFTWARE PROGRAMMING/TOOLS

A. Network Area Controller Toolset

1. Device embedded toolset shall provide the following capabilities in a graphical environment using a standard Web browser:

a. Device and point management

b. Scheduling, alarming and trending setup

c. Creation and binding of graphics

d. Time management

e. User management

2. Toolset provides additional engineering capabilities including:

a. Editable table based point listings.

b. Automatically generated graphics for standard applications.

B. Device Program Editor

1. Definition of application and logic and display operation shall be available in a completely graphic environment.

2. Definition of operator device characteristics, Digital Controllers (DC) panels, individual points, applications, and control sequences shall be performed in a drag and drop programming environment.

3. All temperature and equipment control strategies, energy management routines, scheduled operations and local device status indicators shall be definable by the operator. User password access and language options shall be definable by the operator.

4. Event definition, prioritization, logging and reporting options are definable by the operator.

5. Application logic shall provide for stand-alone applications as well as distributed applications that are automatically downloaded from master controllers to a network of controllers.

6. The programming environment shall provide help menus and instructions for each operation and/or application performed, for all programming library functions, and for the programming language itself.

7. Libraries of standard application modules shall be provided, such as temperature, humidity, and flow control. These modules may be used as “building blocks” in defining or creating new control sequences. In addition, the user shall have the capability to easily create and archive new modules and control sequences.

2.07 LOCAL CONTROL PANELS

A. All control panels shall be factory constructed, incorporating the BAS manufacturer’s standard designs and layouts. All control components shall be UL inspected and listed. Control panels shall be fully enclosed, with sub-panel, hinged door, and slotted flush latch. Control panels shall exist on all equipment specified and shall be UL listed as a complete fabricated system. UL listings shall be shown on final drawings.

B. In general, the control panels shall consist of the DDC controller(s), display module as specified and indicated on the plans, and I/O devices—such as relays, transducers, and so forth—that are not required to be located external to the control panel due to function. Where specified the display module shall be flush mounted in the panel face unless otherwise noted.

C. All I/O connections on the DDC controller shall be provide via removable or fixed screw terminals.

D. Low and line voltage wiring shall be segregated. All provided terminal strips and wiring shall be UL listed, 300-volt service and provide adequate clearance for field wiring.

E. All wiring shall be neatly installed in plastic trays or tie-wrapped.

F. A convenience 120 VAC duplex receptacle shall be provided in each enclosure, fused on/off power switch, and required transformers.

PART 3 – EXECUTION

3.01 PREPARATIONS

A. Prior to Installation: Inspect the installed work executed under other Sections which affect the installation of the controls. Report unacceptable conditions to the Engineer. Do not begin work until unacceptable conditions have been corrected. Installation of the controls shall constitute acceptance of existing conditions.

B. Coordination: Coordinate work with work specified under other Sections to ensure proper and adequate interface of work. Equipment and systems drawings are generally diagrammatic unless dimensions are indicated. Drawings and details shall be checked for interference's with structural and other conditions prior to performing work.

C. The Contractor shall be responsible for safety and good condition of his materials and equipment until final acceptance by the Owner. He shall erect and maintain suitable barriers, protective devices, lights and warning signs where required.

3.02 INSTALLATION

A. General:

1. When applicable installation procedures are shown or specified in other sections, those procedures shall be followed.

2. Provide all supports and hangers, etc., as required to install the equipment as specified or shown on the drawings. All equipment shall be supported, braced and cross-braced to comply with current CBC and CMC.

3. Sealing: Wherever any part of the control system has to pierce the roofing, openings through the roof shall be flashed absolutely watertight.

4. Arrange and support piping and equipment so that vibration is at a minimum and is not transmitted to or through building structure.

3.03 CONDUIT AND WIRING

A. Control wiring and conduit shall be the responsibility of this section and be installed as follows:

1. In equipment rooms/attics – Conductors shall be run in conduit. Final connection to equipment shall be flexible conduit.

2. Concealed in new building construction (wall/inaccessible ceilings) - Conductors shall be run in conduit.

3. Roof mounted/exterior equipment yards - Conductors shall be in conduit. All flexible conduit shall be seal-tite with weatherproof connections. Equipment on

grade and detached from the building a distance greater than 36” shall have underground control conduit routed to equipment.

4. Above accessible ceiling spaces - Control cable will be allowed to be installed without conduit in accessible areas above ceilings as follows:

   a. Plenum rated cable is an approved type for the application.

   b. Cable is bundled/organized in management devices routed square with building lines (no diagonals) and kept clear of electrical devices (i.e., ballasts, transformers, etc.) that could cause interference.

   c. Conduit sleeves are provided between accessible ceiling spaces (i.e., across soffits, gypboard ceilings, etc.) as required to maintain future access to cable.

3.04 CONTROL PANELS AND DEVICE LOCATIONS

A. All controllers, relays, switches, etc., for equipment located within equipment rooms shall be mounted in enclosed UL listed control panels with hinged locking doors. All control devices equipment located in exposed areas subject to outside weather conditions shall be mounted inside weatherproof enclosures.

B. Location of each panel is to be convenient for adjustment and service. Submit locations of all panels to the engineer with shop drawings.

3.05 IDENTIFICATION

A. The label wording shall match that used on the drawings and provide clearly readable printed labels for each control component inside a panel. When applicable, additional identification needed shall be documented on the Shop Drawings.

B. Engraved nameplates shall be provided on the face of each panel and beneath each actuator and control device not in a panel describing its use.

C. All electrical devices within the panel shall be wired to a terminal strip within the panel. An "electric terminal" numbering system shall be applied to all terminals with aforementioned numbers matching terminals shown on Shop Drawings.

3.06 CLOSING-IN OF UNINSPECTED WORK

A. General: Do not allow or cause any of the Work of this Section to be covered up or enclosed until it has been inspected, tested, and approved by the Mechanical Engineer and by all other authorities having jurisdiction.

B. Uncovering: Should any of the Work of this Section be covered up or enclosed before it has been completely inspected, tested, or approved, do all things necessary to uncover all such work. After the Work has been completely inspected, tested, and approved, provide all materials and labor necessary and make all repairs necessary to restore the Work to its original and proper condition at no additional cost to the Owner.

3.07 PROGRAMMING

A. The Direct Digital Control (DDC) operational program will be provided by the BAS Contractor. The Contractor shall provide any testing program he feels necessary to fully test the operation of the various components.

3.08 SYSTEM INSTRUCTION AND RECORD DRAWINGS

A. The BAS Contractor shall schedule a minimum of 40 hours of training to train the District's Energy Management Department in the use and care of the system. This training shall occur after all commissioning of the control system is completed.

B. Instruction period shall be started after instuction books, service manuals and record drawings have been submitted to and approved by the Architect/Engineer and shall be at hours (regular and non-regular) arranged by the Architect/Engineer.

C. Service manuals shall include oiling, cleaning and servicing data, compiled in clearly and easily understood form and in a burable binder. Data shall show all serial numbers of every piece of equipment and complete list of replacement parts.

3.09 TESTING AND ACCEPTANCE

A. The commissioning period starts when the following conditions are met:

1. The BAS system and all involved HVAC equipment have been installed, connected to the EMS system and ready to operate.
2. A commissioning meeting has been conducted with representatives of contractors involved, Fresno Unified School District Energy Management Department Technician & HVAC Supervisor/Mechanic, General Contractor, Mechanical Contractor, and the Control System Contractor.
3. Consensus is reached, by the representatives at the above referenced meeting that it is appropriate for the commissioning process to start. The operational program shall be loaded into the DDC system by the Control Systems Contractor.

B. During the commissioning period, the Control System Contractor will maintain a commissioning file of the printed reports from the building. The District shall verify all commissioning tests.

C. During the commissioning period all mechanical equipment with filters shall have new filters installed. The static pressure across the fan shall be accurately measured and documented if installed. System balance, if required, shall have been completed.

D. The Contractor shall furnish a complete and operating system. The Contractor shall also verify, in the presence of the District, the system accuracy and proper function of each controlled device and sensor. The following items shall be successfully demonstrated prior to acceptance by the District:

1. All system outputs, including controllers, relays and other control devices, shall be addressed and start/stop functions demonstrated.
2. All inputs shall be displayed and all event-initiated functions shall be demonstrated.

3. Demonstrate program integrity and power restore sequence during and after a power failure and restoration.
4. Deliver all As-Built drawings, wiring diagrams, equipment specifications, As- Built communications routing map, Operation and Maintenance Manuals and other documentation as required to describe the system.
5. A wiring schematic shall be permanently attached to the inside door panel of each control device.
6. A detailed As-Built communications wiring loop routing map shall be permanently attached to the front end door panel and a copy shall be provided to the Maintenance Department.
7. Complete operator training in the use, programming and operation of the system.
8. The system will not be considered complete until all system graphics are operational and accurate.

3.10 COMMISSIONING THE SYSTEM

A. The District reserves the right to employ a third party commissioner at the District's expense.

B. During the commissioning period all mechanical equipment with filters shall have new filters installed. The static pressure across the fan shall be accurately measured and documented if installed.

C. The commissioning process will be completed and the training process shall start when the following conditions are met:

1. No "alarm" or "condition reports" are being generated by the DDC system for seven (7) calendar days (168 hours) due to incomplete or inaccurate installation, program, or programming.
2. All adjustments and "fine tuning" of the system shall also be included in the training process.
3. The system has been approved by the General Contractor, and accepted by the Mechanical Engineer and District.

D. The Training Process: Shall consist of the following:

1. System use, operation and field trouble shooting to be provided to the District's Energy Management Department's personnel. Training must be a total of 40 hours of hands on, as well as phone support when needed. The 40 hour training can be used in any time allotment agreed upon by the Controls Contractor and the District EMS Control Center until hours are depleated.
2. The District reserves the right to stop the clock at any time during the training process if there has been a discovery that impedes the complete full and and accurate operation of the BAS installed. This includes the software programming, hardware components, sensors, or mechanical equipment and issues therein until they have been resolved.

END OF SECTION

SECTION 230924 BUILDING AUTOMATION SYSTEM (BAS) ADDITIONAL REQUIREMENTS

PART 1 - GENERAL

1.1 GENERAL MECHANICAL PROVISIONS

A. The preceding General Mechanical Provisions shall form a part of this Section with the same force and effect as though repeated here.

1.2 SCOPE

A. General: This section includes adds supplemental requirements to Section 230923.

B. N2 Protocol: Refer to Section 230923. Delete all references to N2 protocol.

C. Wireless Communications: Refer to Section 230923, paragraph 1.02, A, System Description. Wireless communication shall not be used unless specifically noted.

PART 2 - PRODUCTS

2.1 GRAPHICAL USER INTERFACE

A. Enclosure: Refer to Section 230923, paragraph 2.10, Graphical User interface. Mount the touch panel PC in a NEMA 12 enclosure. Ventilate this enclosure with a low filtered ventilation inlet on one side and a high exhaust fan on the opposite side.

2.2 MISCELLANEOUS DEVICES

A. BACnet Multi-Network Router: Contemporary Controls BASRT-B, BACnet Multi-Network Router to provide stand-alone routing between BACnet networks such as BACNet/IP, BACnet Ethernet and BACnet MSTP. One 10/100 Mbps Ethernet port, One MS/TP port. Provide one in the electrical room in Buildings A, B & C and in Portables D and E. Specific locations shall be as directed by district energy management technician, 559-457-3044

B. Outside Air Temperature Sensor: Provide one ACI/34-Outside per NAC. Install on nonh wall of buildings with NAC. Mount 3 feet below overhang, typical, unless directed otherwise by district. Specific locations shall be as directed by district energy management technician, 559-457-3044.

C. Photocell: Wattstopper EM-24 A 2. Combine with outside air temperature sensor.

D. Status Sensor: Current sensing status sensor with sensitivity adjustment, Siebe El 12-800, Functional Devices RIBXGTA or RIBXKTA. Current sensor must be installed on the "load side" of the magnetic starter.

E. Duct Smoke Detectors: Ionization air duct smoke detector with auxiliary relays/contacts rated for controls shut-down of mechanical air handling unit, metal sampling tube, remote alarm lamp/indicator. FCI Model #301 DHA (CSFM #3240-0694:168) with #3011-DH (CSFM #72710694:169).

F. Electric Actuators:

1 General: Fully modulating, UL listed. Visual position indicator, manual override, spring return and weather guard where exposed to weather. Belimo or equal.

2 Valve Actuators: Provide with factory mounting brackets and linkage to the control valve. Capable of shutting off against a 50 psi differential. Provide clutches for all valve actuators.

G. Damper Actuators: Actuators shall be direct-mounted onto the damper control shaft without linkage. Damper actuators shall be sized to provide a minimum of 5 inch pounds of torque per square foot of damper face area.

H. Controls Transformers: 120VAC/24VAC, 50VA with white common wire. UL listed Split Bobbin transformers.

I. Relays: General purpose relays shall be IDEC RH2B-UL with SH2B-05 base. Motor rated relays (PRD) shall be Functional Devices RIB.

J. Circuit Breaker: Enclosures receiving 120 volt power shall have a combination circuit breaker/dual receptacle. Functional Devices PSPT2RB4. Enclosures receiving 60 volt (or less) power shall have a circuit breaker, IDEC NRAS 1100.

K. Enclosures:

1. General: Must be UL#508A approved as a fabricated panel assembly. A hinged, lockable front panel shall be used. Provide hasp where padlocks are required. The front of the panel shall be identified with an engraved plastic label with 1/4 —inch high letterings, with white on black background. Coordinate label names with District. No conduit or other penetration of any kind shall be made on top of any water type enclosure. If any such entry is made, a plug will not be acceptable, replace the enclosure. All panels shall incorporate "Panduit" HI OOX034FIT-B markers on all internal wires. Heat shrink the labels adjacent to the terminal connections.
2. Pull Can for Wires Only (No Relays): Hoffman A 12N104 with National camlock #C8051-14A bright nickel finish, keyed for #C346A. NEMA 1 if indoor; NEMA 3R if outdoor.
3. For field control device, unless otherwise noted: Hoffman A 242406LP (As minimum size) with metal back panel A HHPWW. Provide Master padlock, keyed for #P605. NEMA 12 if indoor, NEMA 3R if outdoor. Panel shall be UL508A fabricated panel.
4. For Larger Enclosures: Hoffman A 363608LP (minimum size-larger if required) with metal back panel A HHPVV\N. Provide Master padlock, keyed for#P605. NEMA 12 if indoor; NEMA 3R if outdoor. Panel shall be UL508A fabricated panel.

L. Wiring:

1. Communication cable shall be: W183C-2058Y. Install per manufacturer's recommendations. No splices, Tee's, or cuts of any kind will be allowed. Identify both ends at terminal blocks. All wiring that is routed below grade shall be Part # WI 83C-VNTC. Communication loop and sensors shall be run in separate conduits and junction boxes.
2. Sensor wire shall be: Connectair Part # WI 81 P-2040BL.
3. Analog Output shall be: Part # WI 84C-2059PlNK.
4. Thermostat flat wire shall be Connectair Part # W248C-2094.

M. Conduit: All conduit shall be rigid galvanized or EMT — refer to paragraph 3.1. Conduit shall be minimum 1-inch diameter for communication cable. For underground conduit, provide 100% spare capacity by installing a second conduit (empty) along all conduit routes. All fittings shall be steel - not malleable or aluminum.

N. Labels: All labels, signs, etc., shall be engraved, laminated plastic. white on black background, 1/8-inch high lettering, minimum, unless otherwise noted.

O. Wall Plates: Brushed stainless steel. Hubbell.

P. Lightning Arrestor and Surge Suppressors: Shall be provided as approved and/or manufactured by the BAS equipment manufacturer.

PART 3 - EXECUTION

3.1 INSTALLATION

A. General: All electrical work shall be in accordance with the California Electrical Code, Fresno Unified School District Standards and the Electrical Specification Sections. Wiring shall be concealed in walls; above the ceilings, or below grade unless otherwise noted. Exposed wiring shall run parallel to room surfaces; location shall be approved by Fresno Unified School District Project Manager. No structural member shall be weakened by cutting, notching, boring or otherwise. Provide a 120-volt circuit for each device requiring external power. Dedicated circuits shall be provided for all UPS serving NACs and field control devices, and elsewhere as required. Identify the power circuit and wiring at both ends. Any devices or wiring exposed to the weather shall be protected in weatherproof enclosures such as NEMA 3R and weatherproof conduit. Set, test and adjust the system for proper operation. All device locations noted in O&M's, programming, graphics, etc. shall refer to room numbers noted in the District's "Key Plans".

B. Wiring and Conduit: Wiring in walls or in mechanical rooms, janitor rooms or storage rooms shall be in conduit. All wiring exposed to view shall be run in rigid galvanized steel conduit. Ali conduits shall include a pull wire (#12 stranded purple). Wiring in accessible attics may be run without conduit — use plenum-rated wiring. This wiring shall be strapped to structure at 48 inches on center and shall not lie on the ceiling. Inside classrooms, wiring may be run in Panduit for remodel projects. Panduit shall be Series LDPH51W10-A. All wiring (field and inside enclosures) shall be labeled at both ends as specified. All wire or cable shields shall be bonded together. Wiring and wire rolls shall be secured to the interior walls of enclosures or equipment. Use industry standard wire ties and support loops. Do not route communication wiring through room sensors, or any other device that is not secured in a locked enclosure.

C. Existing Controls (remodel projects): Remove all unused control devices and related conduit and wire. Return all unused devices that the District desires to retain. Refer to the Removal and Salvage paragraph in the previous specification section. Where possible, re-use all existing thermostat guards. Existing rigid and EMT conduit may be re-used. Replace all existing flex conduit and fittings.

3.02 SEQUENCE OF OPERATION Systems shall function as follows:

A. General: Air-side equipment (unit ventilators. fan coils, air handlers, etc.) shall start by normally open relay and signal from BAS. The central plant equipment operates with normally open relays when the BAS is activated. Provide heat/auto/cool selection through the BAS. Auto places heating/cooling selection under control of BAS, based on outside air temperature. Heat/cool changeover setpoint shall be 65 degrees F (adjustable through BAS). Wireless communication is not acceptable. All BAS communication shall be via BACnet. Provide clutches for all control valves. Locations of all control panels and sensors shall be coordinated with, and as directed by, the District.

B. Set Point Adjustment: Supply temperature set points shall not be set outside the range specified by the equipment manufacturer.

C. Package AC Units:
   1. Each unit shall be directly controlled by a dedicated controller mounted in a UL listed NEMA 508A enclosure and mounted on or around the unit exterior. The BAS System shall interface with unit to provide control.
   2. Each unit shall be controlled via a wall mounted electronic temperature sensor. This sensor shall include Heat-Off-Cool and On-Auto fan control accessible by occupant.
   3. Cooling Operation: If cooling is required, the first stage shall enable the economizer to modulate return and outdoor air dampers to maintain proper temperature. The second stage shall enable mechanical cooling.
   4. Heating Operation: During the morning warm-up cycle the dampers shall remain closed. The controller shall compare the heating set point with the space temperature and determine a heating control signal to operate the gas valve.

D. Split-System Heat Pump. Shall be activated by BAS. Unit shall be controlled by integral controls. Provide temperature sensor for the area being controlled and status sensors for indoor and outdoor units.

E. Exhaust Fan: See Equipment Schedule on Drawings.

F. Equipment Shut Down: Where noted on schedules. smoke detectors shall shut down units when smoke is detected and signal fire alarm system.

G. Domestic Hot Water Circulating Pumps: Shall start/stop by BAS signal. Current sensor shall report pump status to BAS.

H. Lighting: BAS shall energize exterior lighting. Provide relay with an override switch, RIB 2402 SB. Control power for lighting shall be via a dedicated transformer. Do not power lighting controls from any equipment control transformer. Coordinate with Division 26

END OF SECTION

FRESNO UNIFIED SCHOOL DISTRICT
REV DATE: 07/01/09

SECTION 26 00 00 – ELECTRICAL

PART 1 - GENERAL

1.01 DESCRIPTION:

A. This Section provides the Basic Electrical Requirements, which supplement the General Requirements of Division 1 and apply to all Sections in Division 16.

B. Related Work:
1. Concrete Reinforcing: Section 032000.
2. Cast-in-Place Concrete: Section 033000.
3. Excavating and Fill: Section 322300.

1.02 BASIC ELECTRICAL REQUIREMENTS:

A. Drawings and Specifications coordination:
1. For purposes of clearness and legibility, the electrical drawings are essentially diagrammatic. The size and location of equipment is shown to scale whenever possible. The Contractor shall verify all conditions, data and information as indicated on the drawings and in Specifications Sections where electrical work is required prior to installation.
2. The Electrical Drawings show size and points of termination of the conduits, the number and size of wires, and suggest the proper route for the conduit. It shall be the responsibility of the Contractor to install the conduits with minimum number of bends to conform to the structure, avoid obstructions, preserve headroom, keep openings and passageways clear, and meet all applicable Code requirements. The routing of conduits may be changed, if approved by the District Electrical Inspector.
If the length of a conduit run is increased more than 10% of the length shown on the drawings, the Contractor shall consider worst case voltage drop and adjust wire and conduit size accordingly in compliance with Code. If the length of a conduit run is decreased more than 10% of the length shown on the drawings, the Contractor shall offer a credit to the District for the length and size of the conduit and wire deleted.
3. It is intended that outlets be located symmetrical with Architectural elements notwithstanding the fact that locations shown on the drawings may be distorted for clarity.
4. The Architectural and Structural Drawings take precedence over the electrical drawings in the representation of the general construction work. The drawings of the various trades take precedence in the representation of the work of those trades. The Contractor shall refer to all drawings to coordinate the electrical work with the work of other trades to eliminate all conflicts.

B. Terminology:
1. The term “signal system” shall apply to the clock, bell, fire alarm, annunciator, sound, public address, buzzer, public telephone, television, inter-communication, and security systems.
2. The term “low voltage” shall apply to systems operating at 600 volts and under.

3. The term "provide" used on the drawings and elsewhere in the Specifications shall be considered to mean furnish and install.
4. The term "U.L." means Underwriters Laboratories, Inc.

C. Ordinances and Regulations:
1. Electrical work shall meet requirements of local authorities having jurisdiction, including municipal ordinances, City and/or County Building Codes, the California Administrative Code Title 24, the Safety Orders of the State Division of Industrial Safety, and the Fire and Panic Safety Standards of the State Fire Marshal. Material and labor shall conform to the Regulations of the National Board of Fire Underwriters for Electrical Wiring and Apparatus. All new material shall be U.L listed. The latest Electrical Ordinance of the local jurisdiction, including amendments thereto, effective on the date of opening bids for the work, is hereby made a part of this Specification, and shall apply to all work, except for those portions which conflict with the requirements of the local authorities.
2. Meet the requirements of the California Electrical Code 2016.
3. Electrical work shall comply with the American National Standards Institute (ANSI), which includes the National Electrical Installation Standards (NEIS).

D. Structural Considerations for Conduit Routing:
1. Where conduits are to pass through or will interfere with any structural member, or where notching, boring or cutting of the structure is necessary, or where special openings are required through walls, floors, footings, or other building elements to accommodate the electrical work, such work shall conform to State Building Code, Title 24, for conduits and pipes embedded in concrete and for notches and bored holes in wood; for steel and when detailed on the Structural Drawings.
2. Where a concrete encasement for underground conduit abuts a foundation wall or underground structure which the conduits enter, the encasement shall rest on a haunch integral with the wall or structure, or shall extend down to the footing projection, if any, or shall be doweled into the structures unless otherwise indicated. Underground structures shall include manholes, pull boxes, vaults or buildings.

E. Electrically Operated Equipment and Appliances:
1. Equipment and appliances furnished by the Contractor:
   a. The electrical work shall include furnishing and installing wiring enclosures for and the complete connection of all electrically operated equipment and appliances and any electrical control devices which are specified to be furnished and installed in this or other electrical Sections of the Specifications, except electrical work specified or indicated, to be in the Mechanical Work. All wiring enclosures shall be installed concealed, except where exposed work is indicated on the electrical drawings.
   b. Connections shall be made as necessary to completely install the equipment ready for use. The equipment shall be tested for proper operation and, if motorized, for proper rotation. If outlets of incorrect electrical characteristics or if any equipment fails to operate properly, the Contractor shall report to the District's Inspector in writing, listing the buildings and rooms in which located, the name, make and serial number of the equipment, and a description of the defect.

2. Equipment and appliances furnished by others:
   a. Equipment and appliances shown on the drawings as Not in Contract, Furnished by Others, or Furnished by the District, will be delivered to the Site. Required electrical connections shall be made for all such equipment and appliances in accordance with accepted trade practices under the direction of the District Inspector. All motorized equipment will be furnished factory wired to a motor starter or junction box, unless otherwise indicated. Appliances will be furnished equipped with portable cord and cap. Provide disconnect switches where required.
   b. Connections to equipment furnished under other Sections shall be part of the electrical Work. Work shall include internal wiring, installation, connection and adjustment of bolted drive motors in which the motor is supplied as a separate unit and connections only for equipment furnished with factory installed internal wiring, except as further limited by the drawings and other portions of the Specifications. Work shall include furnishing and installing suitable outlets, disconnecting devices, starters, push-button stations, selector switches, conduit, junction boxes, and the wiring necessary for a complete electrical installation. The work shall also include furnishing and installing the conduit and outlet box, if needed for the control system, furnished under Mechanical. Devices and equipment furnished shall be of the same type used elsewhere on the job or as specified.
   c. Electrical equipment furnished under other Sections for installation and connection under work of this Section shall be delivered to the installation location by the Contractor furnishing the equipment.
   d. Mechanical equipment furnished under other Sections and requiring electrical connection under this Section, will be set in place by Contractor furnishing the equipment.
   e. Suitability and condition of equipment furnished by other Sections shall be determined in advance of installation. Immediate notice shall be given to the District of damage, unsuitability or lack of parts.

F. Protection of materials:
   1. Provide for the safety and good condition of all materials and equipment until final acceptance of the project by the District. Protect all materials and equipment from damage and provide adequate and proper storage facilities during the progress of the work. All damaged and defective work shall be replaced prior to final inspection.

G. Cleaning:
   1. Exposed parts of the electrical work shall be left in a neat, clean, usable condition. Finished painted surfaces shall be un-blemished and metal surfaces shall be polished.
   2. Thoroughly clean all parts of the apparatus and equipment. Exposed parts, which are to be painted, shall be thoroughly cleaned of cement, plaster and other materials. Remove grease and oil spots with solvent. Such surfaces shall be wiped and all corners and cracks scraped out. Exposed rough metal work shall be smooth, free of sharp edges, carefully steel brushed to remove rust and other spots, and left in proper condition to receive finish painting.
   3. The Contractor shall remove from the Site all debris and rubbish occasioned by the electrical work. He shall thoroughly clean the building of dirt, debris, rubbish, and marks caused by the performance of the work.

PART 2 - PRODUCTS - Not used.

PART 3 - EXECUTION

3.01 INSTALLATION OF EQUIPMENT AND APPLIANCES:

A. Conduit stubs for equipment shall be terminated in a coupling flush with the finished floor and shall be extended with minimum 6" high rigid conduit to a motor starter, receptacle, or junction box. Flexible conduit as applicable shall be installed from the rigid conduit to motors and other vibrating equipment.

B. If the connection is from a flush wall-mounted junction box, install a weatherproof universal box extension and adaptor by Bell Electric Company, and extend with rigid steel conduit to the motor starter or junction box on the equipment.

C. All exposed final connections to equipment shall be by a water tight flexible metal conduit, unless otherwise indicated. A maximum of 36" of flexible metal conduit may be used except that all extensions from the flush floor couplings shall be rigid conduit to a distance not less than 6" above the floor.

D. Flexible conduit for all motors, cafeteria equipment and other equipment, including HVAC equipment, shall be liquid-tight flexible metal conduit and shall contain a Code size insulated green bond wire.

E. All exposed conduit shall be run vertically and horizontally following the general configuration of the equipment, using cast threaded hub conduit fittings where required and shall be clamped to the equipment with suitable iron brackets and one-hole pipe straps.

F. Connectors for flexible steel conduit shall be the type, which threads into the convolutions of the conduit or clamp type. Connectors for water-tight flexible metal conduit shall be approved for such use and shall be installed to make a watertight connection.

END OF SECTION

FRESNO UNIFIED SCHOOL DISTRICT
REV DATE 07/01/09

SECTION 26 05 00 – COMMON WORK RESULTS FOR ELECTRICAL

PART 1 - GENERAL

1.01 DESCRIPTION:

A. Work Included:
1. Raceways, fittings and supports.
2. Wires, cables and connectors.
3. Boxes, enclosures, keys and locks.
4. Receptacles and switches.
5. Identifications and signs.

1.02 SUBMITTALS:

All submittals shall be made in accordance with Section 01300.

PART 2 - PRODUCTS

2.01 RACEWAYS, FITTINGS AND SUPPORTS:

A. Conduit Materials:
1. Metallic conduit and tubing shall be manufactured under the supervision of Underwriters' Laboratory, Factory Inspection and Label Service Program. Each 10' length of conduit and tubing shall bear the Underwriters' Laboratory label and manufacturer's name.
2. Rigid steel conduit shall be heavy wall, mild steel, zinc coated, with an inside and outside protective coating. Couplings, elbows, bends and other fittings shall be the same materials and finish as the rigid steel conduit. Fittings, connectors, and couplings shall be threaded type.
3. Electrical metallic tubing shall be steel tubing, zinc coated with a protective enamel coating inside. Fittings, couplings and connectors shall be gland compression type. Electrical metallic tubing is designated herein after as "EMT".
4. Flexible steel conduit shall be of flexible interlocking steel strip construction with continuous zinc coating on the strips. Connectors and couplings shall be approved fittings of the type which thread into the convolutions of the flexible conduit or clamp type.
5. Liquid-tight flexible metal conduit shall be galvanized, heavy wall, flexible locked steel strip construction with a smooth moisture and oil proof, abrasion-resistant, extruded plastic jacket. Connectors shall be approved for use with liquid-tight flexible conduit and shall be installed to provide a liquid-tight connection.
6. Acceptable Manufacturers: Crouse Hinds or Appleton.
7. No metal clad (MC) cable allowed as alternate.

B. Sleeves for Conduits:
Sleeves shall be adjustable type, of 26 gauge galvanized iron, Adjusto Crete Company, Adjusto-Crete, or Jet Line Products Inc., Jet-Line.

C. Expansion Joints:
Where conduits embedded in masonry or concrete cross seismic separations between buildings, expansion joints or at locations indicated, the Contractor shall provide sliding or a sliding and deflecting fitting, as conditions require in each conduit. Sliding fittings shall be O-Z Electrical Manufacturer Company, Inc., Type AX, with bonding strap and clamps. At exterior locations use O-Z Electrical Manufacturer Company Inc., Type EX.

D. Penetration in Fire Rated Structures:
Provide Dow Corning No. 3-6548, RTV silicone foam for making fire rated seals around penetrations through floors or walls.

2.02 WIRES, CABLES AND CONNECTOR:

A. Pull Wires: A 1/8" polypropylene cord shall be installed in each empty conduit. A 1/8" polypropylene cord shall be installed in each underground service conduit unless otherwise required by the utility company.

B. 600 Volts or Less Wires:
1. Wire shall be NEC type THHN or THWN in sizes No. 4 and smaller and NEC type THWN in sizes No. 2 and larger, unless otherwise indicated. All wire shall have copper conductors. Wires No. 14 and larger shall be stranded. Wires smaller than 12 gauge shall not be used in the light and power systems.
2. Wire adjacent to ovens and boilers, in range hoods, and at other dry locations where the operating temperature of the wire may be expected to exceed 60□ C, but not to exceed 90□ C, shall be National Electric Code Standard Type THHN. Where the temperature may be expected to exceed 90□ C, wire shall be a type approved by Underwriters' Laboratory for the temperature and installed conditions involved, silicone type wire 200□□C or equivalent.

C. Color Code, Signal and Communications Systems:
All wires for signal and communication systems shall be color coded per District standards and shall be installed under the direction of the District's Electrical Inspector. Request a copy of the District Standards for color coding prior to ordering wiring—black, red, blue, white – 208-240; brown, orange, yellow – 480/277.

2.03 BOXES, ENCLOSURES, KEYS AND LOCKS:

A. Outlet Boxes and Fittings:
1. Outlet boxes used in concealed work shall be galvanized or sherardized steel, pressed or welded type, with knockouts.
2. In exposed work, outlet boxes and conduit fittings required and where conduit runs change direction or size, shall be cast metal with threaded cast hubs cast integral with the box or fitting. Boxes and fittings shall not have unused spare hubs, except as otherwise indicated or approved manufacturer.
3. Fittings shall be cast metal and non-corrosive. Ferrous metal fittings shall be cadmium plated or zinc galvanized. The castings shall be true to pattern, smooth, straight, with even edges and corners, of uniform thickness of metal and shall be free of cracks, gas holes, flaws, excessive shrinkage and burnt out sand.
4. Covers for fittings shall be galvanized steel or non-corrosive aluminum and shall be designed for the fitting with which used.

5. Light fixture outlets shall be 4" octagon, 4” square, or larger, depending upon the number of wires or conduits therein, and shall be equipped with 3/8” malleable iron fixture studs, and plaster rings. Plaster rings shall have round opening with two ears drilled 2 23/32” center to center.
6. For local switch outlets use 4" square boxes for single gang, 4 11/16” square boxes for two-gang, and special solid gang boxes with gang plaster ring for more than two switches.
7. For all receptacle, clock, bell, fire station, speaker, security and telephone outlets, use 4” square boxes or larger with single gang plaster rings. For television outlets, use 4-gang deep boxes and 4-gang plaster rings. For communication switch, use 4" square boxes with single gang or larger plaster rings.
8. Plaster rings shall be provided on all flush mounted outlet boxes, except where otherwise indicated or specified. All plaster rings shall be same depth as the finished surface.
9. Factory made knock-out seals shall be installed to seal all box knock-outs, which are not intact.
10. At each location where flexible conduit is extended from a flush outlet box, provide and install a weatherproof universal box extension adapter by Bell Electric Company.
11. No more than one box extension or cuffs used anywhere.

B. Junction and Pull Boxes:
1. Junction and pull boxes, in addition to those indicated, shall only be used where absolutely necessary with the specific approval of the District's Electrical Inspector in each case.
2. Interior and non-weatherproof boxes shall be constructed of blue or galvanized steel with ample laps, spot welded and shall be rigid under torsional and deflecting forces. Boxes shall have auxiliary angle iron framing where necessary to ensure rigidity. Covers shall be fastened to the box with a sufficient number of brass or stainless steel machine screws to ensure continuous contact all around. Flush type boxes shall be drilled and tapped for cover screws at the site if the boxes are not installed plumb. All surfaces of pull and junction boxes and covers shall be given one coat of metal primer, and one coat of aluminum paint, and shall have permanent labels with box designation or system or circuit numbers.
3. Weatherproof pull and junction boxes shall conform to the foregoing for interior boxes with the following modifications: The cover of flush mounting boxes shall have a weather-tight gasket cemented to and trimmed even with the cover all around. Surface or semi-flush mounting pull and junction boxes shall be Underwriters' Laboratory approved as rain-tight and shall be complete with threaded conduit hubs. All exposed portions of boxes shall be galvanized and finished with a prime coat and standard coat of baked-on enamel. For underground pull-boxes, the cast iron cover shall be permanently marked Electrical, Power, Signal, Telephone or Ground.
4. All junction and pull-boxes shall be rigidly fastened to the structure and shall not depend on the conduits for support.

C. Floor Outlets:
1. All flush floor outlet boxes shall be adjustable, cast iron, set flush with the finished floor material, Hubble No. B-2503.
2. Telephone, microphone and similar floor outlets shall be equipped with a brass cover plate with 2 1 /8” flush cap, Hubble No. S-3061.
3. Receptacle floor outlets shall be equipped with a flush brass cover plate with screw-in caps, appropriate for the type of receptacle shown on the drawings.

D. Floor Pockets:
   1. Single Gang: Receptacle floor pockets shall be single gang, flush floor type, with cast iron floor plate, hinged cast iron door notched for cable and cast iron box, C.W. Cole No. TLS-362-1-FE. Equip each pocket with a standard single grounding type receptacle, unless otherwise indicated. Use C.W. Cole No.
      TLA-362-1 in wood floors.
   2. Microphone, speaker or projector sound floor pockets shall be single gang flush floor type with cast iron floor plate, hinged cast iron door, notched for cable and cast iron box, C. W. Cole No. TLA-362-3-FE. Use C. W. Cole No. TLS-362-3 in wood floors.

2.04 RECEPTACLES AND SWITCHES:

A. Receptacle shall be industrial Specifications grade, back and side wired with binding screws and plaster ears with captive mounting screws. Receptacle bodies shall be phenolic, plastic or bakelite with ivory colored faces, unless otherwise indicated. Receptacles shall have heavy duty, current carrying contacts and double wipe flat ground contacts. Receptacles shall be Hubbell, Arrow-Hart, Bryant or Leviton.
   1. Duplex receptacles shall be 20 amps (NEMA 5-20R), 125 volts, two-pole, three-wire with parallel slots, U-ground.
   2. Single receptacles shall be of the voltage, rating and configuration shown on the drawings.
   3. Ground fault interrupting type receptacles shall consist of a duplex receptacle with a test and a reset device manufactured in a standard configuration for use with a duplex cover plate. Receptacles shall be 20 amps (NEMA 5-20R) or as indicated on the drawings. Exterior receptacles shall be weatherproof.
   4. Weatherproof receptacles, except where otherwise indicated or specified, shall consist of a duplex receptacle, as specified herein, and a metal plate with die cast hinged lid and weatherproof mat.

B. Switches:
   1. Local Switches:
      a. Local switches shall be tumbler type, industrial specification grade, rated 20 amps at 120-277 volts AC only, with plaster ears, binding screws for back and side wiring and standard size composition cups which fully enclose the mechanism. Switches shall be approved for use at currents up to the full rating on resistive, inductive, tungsten filament lamp and fluorescent lamp loads, and for up to 80% of the rating for motor loads. Switches shall be single pole, double pole, three-way, four-way, non-lock type, (or lock type when indicated). Non-lock type switches shall have ivory handles. Switch shall be Hubbell 1221I or approved manufacturer specified by the District.
      b. All lock type switches shall have metal or nylon key guides with ON/OFF indication, and shall be operable by the same key. Keys for lock type switches shall be forked type, cut from 1/16" stock. Fork dimensions shall be: External 1/4", Internal 5/32”, depth 3/16" and radius 5/64". Key switches shall be Hubbell 1221L only. Where pilot light is required for key switch see paragraph on Pilot Lights. Provide minimum ten keys to District.
      c. Pilot light switches shall be rated 20 amps and shall conform to the Specifications for local switches. The switches shall have red, rugged lexan handles that are lighted by long lasting neon lamps. Pilot light shall light when load is on. Single pole, 120 volts witches shall be Hubbell 1221-PL
      d. Remote control switches for mechanically held contractors arranged for three-wire control shall be tumbler type, momentary contact, single pole, three-position with center "OFF

rated 20 amps at 120/277 volts AC only, with plaster ears, binding screws for side wiring, standard size composition cups which fully enclose the mechanism and ivory handles. Lock type switches shall be Hubbell 1557L.

2. Time Switches and Photo Electric Controls:
   a. Time switches shall be 7-day Intermatic or approved manufacturer specified by the District.
   b. Photo electric Control: Photo electric control shall be rated 2000 watts with single pole, single throw, normally closed contact, enclosed in a die cast aluminum gasket enclosure, Tork Series, Intermatic or approved manufacturer by the District.

2.05 IDENTIFICATION AND SIGNS:

A. Name Plates:
   1. The following equipment shall be provided with name plates unless otherwise specified: Switchboards, motor control centers, control panels, push button stations, time switches, contractors, motor starters, motor switches, relays, panel boards and terminal cabinets.
   2. Name plates shall give equipment designation and adequately describe the function, voltage and phase of the particular equipment involved. For panel boards, the nameplates shall indicate the panel designation, voltage and phase of the panel. For terminal cabinets, the nameplates shall indicate the system housed therein.
   3. Nameplates shall be black and white nameplate stock of bakelite with characters cut through the black exposing the white. Plates shall have beveled edges and shall be securely fastened in place with No. 4 Phillips head, cadmium plated steel, self tapping screws. Characters shall be 3/16" high, unless otherwise indicated.

B. Markings:
   The following equipment and controls shall have markings: Pull and junction boxes, and other devices controlling motors and appliances. Abbreviations acceptable to the District's Electrical Inspector, along with an identifying number, shall be used. Markings shall be done with locking type stencils using paint of a contrasting color. Figures shall be 3/8" high unless otherwise indicated.

C. Warning Signs:
   1. Provide a warning sign firmly secured to the outside of each door or gate to enclosures containing high voltage equipment over 600 volts A.C. The signs shall read: "Danger High Voltage Keep Out ". Signs shall be 7" x 14" with all lettering 1" high, except the word "Danger", which shall have 1 1/2" high letters.
   2. Signs shall be of standard manufacturer 18 gauge steel, with porcelain enamel finish. Letters shall be red on white background.

PART 3 - EXECUTION

3.01 CONDUIT INSTALLATION:

A. General Requirements:
   1. Provide complete and continuous systems of rigid steel conduit, outlet boxes, junction boxes, fittings and cabinets for all systems of electrical wiring including lighting, power, communications, control and signal systems, except as otherwise specified.
      a. Site electrical distribution conduit sizes shall be:

1.) Electrical power and lighting, and control systems distribution - 1" minimum.
2.) Signal and communications distribution - 2" minimum and separate conduit for each system.

b. Site underground pullboxes minimum – Christy N30.

2. Within buildings EMT may be used in lieu of rigid steel conduit where permitted by ordinance. EMT shall not be used in the following cases: exposed below 8 feet elevations; in concrete; underground.
3. Within buildings flexible steel conduit may be used in lieu of rigid steel conduit where permitted by ordinance, but no metal clad (MC) cable. Flexible steel conduit shall not be used for runs longer than 6 feet or for exposed conduits.
4. Flexible steel conduit shall be used, except where otherwise specified, for final connection of all motor terminal boxes and shall be of sufficient length (not to exceed 36") to allow full travel or adjustment of the motor on its base.
5. Underground feeder distribution conduits for all systems may be nonmetallic polyvinyl chloride (PVC) Schedule 40 conduit in lieu of rigid steel conduit, except where otherwise specified or indicated.
6. Conduit shall be concealed, unless otherwise indicated. Conduits exposed to view (except those in attic spaces and under buildings) shall be installed parallel or at right angles to structural members, walls, or lines of the building. Conduits shall be routed to clear access openings.
7. Bends or offsets will not be permitted, unless absolutely necessary. The radius of each conduit bend or offset shall be as required by ordinance, except for underground conduits, for public telephone conduits, and where otherwise indicated or specified. Bends and offsets shall be made with standard tools and equipment made especially for the purpose or may be factory made bends or elbows complying with the requirements for radius of bend specified herein. Public telephone conduit bends and offsets shall have a radius, which is not less than ten times the trade size of the conduit, unless otherwise approved by the telephone company. Refer to "Underground Conduit Installation" for the radius of bends and offsets required for underground installations.
8. Running threads will not be permitted. Provide approved conduit unions where union joints are necessary. Conduits shall be kept at least 6" from the coverings on hot water and steam pipes and 18" from flues and breechings. The open ends of conduits shall be kept closed with approved conduit seals during construction of the buildings and during the installation of underground systems.
9. The joints in conduits installed in concrete, wet locations, exposed to the weather or underground shall be made liquid tight.
10. Conduits run exposed on roofs shall be rigid conduit (no EMT).
11. Where auxiliary supports, saddles and brackets are required to meet special conditions, they shall be made rigid and secure before the conduit is attached thereto.
12. Conduit in ceiling spaces, in stud walls and under floors, shall be supported with factory made pipe straps or shall be suspended with pipe hangers or pipe racks. The pipe straps shall be attached to and shall hold the conduit tight at the point of support against the ceiling, floor joists, rafters, wall studs or 2" x 4" headers fitted between the joists or wall studs.
13. Conduits installed on exposed steel trusses and rafters shall be fastened with factory made conduit straps or clamps, which shall hold the conduit tight against the supporting member at the point of support.
14. Conduits under buildings shall be buried below the surface of the ground.
15. Pipe hangers for individual conduits shall be factory made, consisting of a pipe ring and threaded suspension rod. The pipe ring shall be malleable iron, split and hinged, and shall securely hold the conduit, or shall be springable wrought steel. Rings shall be bolted to or

interlocked with the suspension rod socket. Rods shall be 3/8" for 2" conduit hangers and smaller and shall be 1/2” for 2 1/2" conduit hangers and larger.

16. Pipe racks for groups of parallel conduits and for supporting total weights not exceeding 500 pounds shall be trapezed type and shall consist of a cross channel, Steel City Kindorf No. B-900 or Unistrut No. P-1000 suspended with a 3/8" minimum diameter steel rod at each end. Each rod shall be fastened with nuts, top and bottom to the cross channel and with a square washer on top of the channel. Each conduit shall be clamped to the top for the cross channel with conduit clamps, Steel City Kindorf No. C-105 or Unistrut Nos. P-1111 through P-1124. Conduits shall not be stacked one on top of the other, but a maximum of two tiers may be on the same rack by providing an additional cross channel. Where a pipe rack is to be longer than 18" or if the weight it is to support exceeds 500 pounds, submit details of the installation to the Architect for approval.
17. Conduits, which are suspended on rods more than 2' long, shall be rigidly braced per State Seismic Regulations to prevent horizontal motion or swaying.
18. Factory made pipe straps shall be one- or two-hole formed galvanized clamps, heavy duty type, except as otherwise specified.
19. Hangers, straps, rods or pipe supports under concrete shall be attached to inserts set at the time the concrete is poured. Under wood, use bolts, lag bolts or lag screws; under steel joists or trusses, use beam clamps.
20. Conduits shall be supported at intervals required by ordinance, but not to exceed 10'. One inch and smaller conduits installed exposed shall be fastened with 2-hole straps. Perforated strap and plumber's tape shall not be used in the support of conduits.
21. Each conduit stubbed up through a roof or an arcade shall be flashed with a waterproof flashing. The base of the flashing shall extend on the roof not less than 10" from the conduit. Flashing shall extend up the conduit not less than 6" and shall be in contact with the conduit for minimum 1" at the top. Refer to Division 7, Sections 07310, 07510, and 07541.
22. Bushings for all sizes of rigid steel conduits shall be threaded insulating type. Set screw bushings are not acceptable.
23. All flex conduits shall be cut square and not at an angle.
24. It shall be the responsibility of the Contractor to install the conduits with a minimum number of bends in such a manner as to conform to the structure and meet all applicable code requirements.
25. The routing of conduits may be changed if approved by the District Inspector, providing the length of any conduit run is not decreased more than 10% of the length shown on the drawings.
26. Minimum size conduit for all signal and communication systems shall be 3/4”.
27. A minimum of two 1" conduits shall be installed (stubbed) into nearest accessible ceiling space from each panelboard, terminal cabinet, distribution panelboard, backboard or switchboard. Cap conduits with appropriate conduit caps.
28. Conduits installed vertically on the outside surface of buildings shall be strapped tight to the building surface with no space behind.

B. Underground Requirements:

1. All conduits installed underground shall be entirely encased in concrete 3" thick on all sides with multiple conduits spaced not less than 1 1/2" apart, unless otherwise specified. Provide approved conduit spacers as required to prevent any deflection of the conduits when concrete is poured and to preserve the position and alignment of the conduits in the concrete. Conduits shall be tied to the spacers. Anchors shall be installed to prevent floating of conduits during pouring of concrete. Red colored concrete shall be used to encase conduits of systems operating above 600 volts.

2. All underground conduits shall be buried to a depth of not less than 24" below finished grade to the top of the concrete envelope, unless otherwise specified.
3. Assemble the sections of conduit with approved fittings and stagger all joints. Cut ends of conduit shall be reamed to remove all rough edges. The joints in all conduits shall be made liquid tight. All bends at risers shall be completely below the surface where possible.
4. Two or more conduit runs in a common trench shall be separated by at least 1 1/2" of concrete. Electric conduit runs installed in a common trench with other utility lines shall be separated from such lines by at least 12" horizontally. Public telephone conduits shall be separated from electric conduits or other utility lines by not less than 3" of concrete, 2' horizontally and 1' vertically.
5. The District's Electrical Inspector shall be called to the site for approval of all underground installations before and during concrete pour. Where considered necessary by the District's Electrical Inspector, a mandrel shall be drawn through each run of conduit in the presence of the Inspector, before and after pouring concrete. The mandrel shall be 6" in length minimum and have a diameter which is within 1/4" of the diameter of the conduit to be tested.
6. Nonmetallic conduit installations shall comply with the following additional requirements: All joints in PVC conduit shall be sealed by means of approved solvent-weld cement supplied by the conduit manufacturer. All nonmetallic conduit bends and deflections shall comply with the requirements of the applicable Electrical Code, except that the minimum radius of any bend or offset for conduits sized from 1/2" to 1 1/2" inclusive shall not be less than 24". All 90° Ell's, 1" and larger, shall be rigid conduit. All 90 degree bends, bends at risers, and the risers shall be rigid steel conduit and shall comply with the requirements specified herein for underground rigid steel conduit installations. The radius of the curve of any bend or offset in non-metallic conduit for the Public Telephone System shall be not less than ten times the trade size of the conduit, unless otherwise specifically approved by the Public Telephone Utility Company.
7. Rigid steel conduit installations shall comply with the following additional requirements: Where sweeps are specified or indicated, the radius shall be not less than 10'. The radius of the curve of the inner edge of any bend or offset shall be not less than is permitted in the Conduit Bend Radii table for rigid steel conduit field bends in the applicable Electrical Code, unmodified by any exemptions, bulletins, or amendments. The radius of the curve of bends or offsets for the Public Telephone System shall be not less than ten times the trade size of the conduit, unless otherwise specifically approved by the Telephone Utility Company. Rigid conduit underground to be double wrapped with 10 mill tape.

C. In Slabs on Grade:
1. Unless specifically approved by the Office of the State Architect, conduits 1 1/4 size and larger shall not be installed in structural concrete slabs. Where conduits are permitted, and are installed in concrete slabs on grade, the slabs shall be thickened at the bottom where conduits occur to provide 3" of concrete between the conduit and earth. Conduits shall clear all rebar. The required excavation shall be part of the work of this Section.
2. If the concrete slab is 5" or more in thickness with a moisture barrier plastic sheet between the earth and the slab, the 1" and smaller conduits shall be installed in the slab with a minimum of 1" concrete between earth and conduit.

D. Penetration in Concrete Walls, Beams and Floors: Provide sleeves where conduits pierce concrete walls, beams and floors, except floor slabs on earth. Sleeves shall have 1/2" clearance around conduits. Sleeves shall not extend beyond the exposed surfaces of the concrete and shall be securely fastened to the forms. Where conduits pass through walls below grade, calk with District approved sealant and provide backer materials between the conduit and the sleeve to obtain a water tight joint.

3.02 STUBS:

A. Floor: At each point where floor stubs are indicated in open floor areas for connections to equipment, the conduits shall be terminated with couplings, the tops flush with the finished floor. Stubs shall extend above the couplings the indicated distance, but in no case less than 6" high. Where capped stubs are called for, the couplings shall be closed with cast iron plugs with screw drive slots.

B. Underground:
   1. Underground conduit stubs shall be terminated at the locations indicated, but minimum 5' beyond building foundations, steps, arcades, concrete walks and paving, unless otherwise noted. Rigid steel conduit stubs and nonmetallic conduit stubs shall be capped by installing a coupling flush in the end wall of the concrete encasement and plugging with an approved plug or terminated stub in a concrete box (Christy). The As-Built Record drawings shall show the location of the ends of underground conduit stubs fully dimensioned with reference to the buildings or permanent landmarks. These dimensions, including depth below finished grade, shall be marked on the "As-Built" Record Drawings in the presence of the District's Inspector before backfilling in the trench.

3.03 WIRE INSTALLATION:

A. Wire shall not be installed until all plastering throughout the building is completed, and all debris and moisture removed from the conduits, boxes, and cabinets.

B. Wire-pulling compounds used as lubricants in installing conductors in raceways shall only be compounds approved and listed by Underwriters' Laboratory. No oil, grease, graphite, or similar substances may be used. Pulling of No. 1/0 or larger conductors shall be done only with an approved cable pulling machine.

C. The District's Inspector shall be called to the site and shall supervise the installation of all feeder cables. The District shall be notified not less than two working days in advance of the proposed time of installation.

D. At all outlets for light, power, communications, control, and signal equipment, pigtail splices with 8" circuit conductor leads shall be provided for connection to fixtures, equipment and devices.

E. Pressure cable connectors, pre-insulated "Scotchlok" Type "'Y", "R", or "B" spring loaded twist-on type, may be used for splicing 8 gauge or smaller conductors, in lieu of soldered connectors for all wiring systems, except the public address, District owned telephone system, or system clocks.

F. All joints, splices, taps and connections for cables 6 gauge and larger, shall be made with high-pressure cable connectors approved for use with copper conductors.

G. Wire in switchboards, panels, terminal cabinets, pull boxes and other cabinets (except public address) shall be neatly grouped and tied in bundles with nylon ties at 10" maximum intervals. At switchboards, panels and terminal blocks, wires shall be fanned out to the terminals.

H. Each neutral conductor larger than 6 gauge which is not color identified throughout its entire length shall be painted white or taped white wherever it appears in a switchboard, cabinet, gutter or box. Neutral conductors 6 gauge and smaller shall be white color identified throughout their entire length.

I. All systems of wiring shall be so installed that when completed, the systems will be free from short circuits and from grounds, other than required grounds. The Contractor shall provide all instruments for testing and shall demonstrate in the presence of the District's Electrical Inspector that each system of wiring meets the following minimum requirements for insulation resistance:
   1. For circuits of No. 12 AWG wiring or smaller: 1,000,000 ohms.
   2. For circuits of No. 10 or larger conductors, a resistance shall be based on the following allowable current-carrying capacities of conductors:

25 to 50 amperes inclusive	250,000 ohms
51 to 100 amperes inclusive	100,000 ohms
101 to 200 amperes inclusive	50,000 ohms
201 to 400 amperes inclusive	25,000 ohms
401 to 800 amperes inclusive	12,000 ohms
Over 800 amperes inclusive	5,000 ohms

   3. The above values shall be obtained with all switchboards, panel boards, fuse holder, switches, and overcurrent devices in place and connected, and with all switches closed.
   4. If lamp holders, receptacles, fixtures and appliances for a system are also connected, the minimum insulation resistance permitted shall be one-half the values specified above.

J. The Contractor shall provide a "Meager" insulation tester, which will apply a minimum of 500 volts direct current for these tests when requested by the District’s Inspector.

K. 120 volts and 277 volts circuits shall be routed in separate conduits, raceways and enclosures.

L. Other conductors in raceway or cable: Conductors, other than service conductors, shall not be installed in the same service raceway or service cable.

   All low voltage wiring regardless of insulation voltage rating shall be in a separate raceway. It shall not be in the same raceway or pullbox with systems 100 volt or more.

3.04 FEEDER IDENTIFICATION:

Lighting, power, and low voltage feeder wires and cables shall be identified at each point of termination and at each point the conduit run is broken by a cabinet, box and gutter. Identification shall be by means of wrap around type markers, E-Z Code or Brady Perma-Code, and shall include the feeder designation, size and description.

3.05 TAPE:

Splices, joints and connectors joining conductors shall be covered with insulation equivalent to that on the conductors. Free ends of conductors connected to an energized source shall be taped. The voids in irregular connectors shall be filled with insulating compound before taping. Thermo plastic insulating tape approved by Underwriters' Laboratory for use as the sole insulation of splices shall be

used and shall be applied according to the manufacturer's printed specifications. Heat shrink tubing may be used as per manufacturer's specifications.

3.06 BOXES INSTALLATION AND SUPPORT:

A. Outlet boxes shall be flush with finished surface of wall or ceiling. They shall be plumb and securely fastened to the structure independent of the conduit. Except where otherwise indicated, factory made bar hangers shall be used to support outlet boxes.

B. Outlet boxes installed in ceilings suspended or furred with steel runner and/or furring channels shall be supported (except where otherwise indicated) by a Unistrut No. P-4000 channel spanning the main ceiling runner channels. Each box shall be supported from its channel by a 3/8" 16 threaded steel rod with a Unistrut No. P-4008 nut and a Tomic No. 711-B Adapta-Stud. The rod shall be tightened to a jamb fit with the channel and its nut. The box shall be locked to the rod by means of a 1/2" locknut on the stud and a 3/8" 16 hex nut locking the stud to the rod.

C. The heights of outlets and equipment indicated on the drawings shall govern, but in the absence of such indications, the following heights shall be maintained. Heights are to centerline from finished floor surface, unless otherwise noted:
   1. Communication switch, pushbutton, light switch, other switches, and fire station outlets: 48".
   2. Bell and/or horn outlets in corridors: 12" below ceiling.
   3. Clock, speaker, and bell outlets in classrooms and offices: 8' 0".
   4. Outside bell and yard light outlets: 12" below the top plate level for one-story buildings without covered porch or arcade, and 12" below covered porch and arcade ceilings.
   5. Desk public telephone, television, desk interphones, and receptacle outlets 12".
   6. Panel boards and terminal cabinets: 6' 6" to top.

D. Receptacle outlet boxes shall not be located within 6' of water sinks, except where a ground fault interrupter circuit breaker or ground fault type receptacle is provided to protect receptacle outlets located within 6' of water sinks.

3.07 PLATES:

A. Provide an appropriate plate on each outlet. Plates shall be of stainless steel, unless otherwise specified. Public telephone plates shall have single bushed openings. Sectional plates will not be accepted.

B. Flush wiring device and signal system outlets indicated to be blank covered, shall be covered with blank stainless steel plates. Flush lighting outlets to be capped shall be covered with Wire mold No. 5736 steel covers, painted to match the surrounding finish. Surface-mounted outlets indicated to be capped shall be covered with blank stainless steel covers.

C. Switch and receptacle plates shall be provided with engraved designations under any one of the following:
   1. Pilot Switches.
   2. Switches so located that the operator cannot see one of the fixtures or items for equipment controlled with his hand on the switch.
   3. Switches not in the same room with the fixtures or items of all unit heaters, air curtains, fly fans, and exhaust fans.
   4. Receptacles operating at other than 120 volts.

5. Where so indicated on the drawings.

D. The designations shall be as indicated on the drawings or as specified and shall be engraved in the plates with 3/16" high block type letters filled with black enamel. Where designations are not indicated or specified they shall be requested from the Engineer. For estimating purposes, they may be assumed 12", not to exceed more than ten letters per gang.

3.08 IDENTIFICATION OF CIRCUITS AND EQUIPMENT:

A. Switchboards, motor control centers, transformers, panel boards, circuit breakers, disconnectinq switches, starters, pushbutton control stations and other apparatus used for the operation or control of circuits, appliances or equipment, shall be properly identified by means of descriptive nameplates or tags permanently attached to the apparatus or wiring.

B. Nameplates shall be engraved laminated bakelite. Shop Drawings with dimensions and format shall be submitted to the District or Architect for approval before installation. Attachment to equipment shall be with self-tapping screws. Self-adhering or adhesive backed nameplates shall not be used.

C. Tags shall be attached to feeder wiring in conduits at every point where runs are broken or terminated, including pull wires in empty conduits. Circuit, phase and function shall be indicated. Branch circuits shall be tagged in distribution boards, panel boards, and motor control centers. Tags shall be made of pressure sensitive plastic or embossed self-attached stainless steel or brass ribbon.

D. Cardholders and cards shall be provided for circuit identification in panel boards. Cardholders shall consist of metal frame retaining a clear plastic cover permanently attached to the inside of panel door. List of circuits shall be typewritten on a card. Circuit description shall include name or number of circuit, area and connected load.

E. Junction and pull boxes shall have covers stenciled with box number when shown on the drawings, or circuit numbers according to panel schedules. Data shall be lettered in a conspicuous manner with a color contrasting with finish.

F. Name as described in part 2A shall be correctly engraved with a legend showing function or areas when required by Codes or shown on the drawings.

G. Provide identity tags as to source and destination of all underground feeder cables in underground boxes.

H. Underground feeder cables not to exceed 200 feet without a pull box.

END OF SECTION

FRESNO UNIFIED SCHOOL DISTRICT
REV DATE: 07/01/09

SECTION 26 05 26 – GROUNDING AND BONDING OF ELECTRICAL SYSTEMS

PART 1 - GENERAL

1.01 DESCRIPTION:

A. Work Included:
1. Provide and install a grounding system as specified and indicated.

B. Related Work:
1. See related Sections for their system grounding requirements.
2. Basic Electrical Requirements: Section 16010.
3. Basic Electrical Materials: Section 16050.

1.02 SYSTEM REQUIREMENT:

A. Grounding shall be as approved by the State of California, Division of Industrial Safety.

B. Electrical continuity to ground for metal raceways and enclosures, which are isolated from the equipment ground by use of non-metallic conduit or fittings, shall be provided with a Code sized green insulated grounding conductor within each raceway connected to the isolated metallic raceways or enclosures at each end. Each flexible conduit shall be provided with a green insulated grounding conductor of Code approved size.

C. Cold water or other utility piping systems shall not be used as the main system grounding electrodes due to the possible use of insulating couplings and nonmetallic pipe in such installations. All grounding electrodes shall be made electrodes as indicated on the drawings. Within every building the panels shall be bonded to a 1" or larger underground cold water service line with minimum 1" conduit, and one No. 6 wire. All metallic piping systems (gas, fire sprinkler) shall be bonded to the cold water line with 3/4" conduit with one No. 8 wire.

D. Non-current carrying metal parts of all high voltage, light and/or power, communications, control, and signal conduit systems, supports, cabinets, switchboards, enclosures, fixed equipment, portable equipment and motor frames
shall be permanently and effectively grounded.

E. Service neutral conductors of light and/or power alternating current systems shall be grounded as indicated on the drawings and as required by the Utility Company.

F. Secondary neutral conductors of all light, power and signal alternating current systems shall be grounded.

G. Provide a “made electrode” bonded to the equipment enclosure at each separate building, including portable buildings, for each light and/or power system. Grounded (neutral) conductors shall be terminated at the neutral bus of the first panel or

switchboard encountered within the building, and the neutral bus, equipment enclosure and "made electrode" shall be bonded together.

1.03 SUBMITTALS:

Submit a material list in accordance with Submittals section.

PART 2 - PRODUCTS

2.01 MATERIALS:

A. Yard boxes for "made electrodes" shall be precast concrete as detailed on the drawings. Boxes shall be equipped with bolted down, checkered, cast iron covers and a cast iron frame cast into the box. Yard boxes shall be Brooks 36 or approved manufacturer.

B. "Made electrodes" shall be approved copper clad steel ground rods, minimum 3/4" diameter 10'-0" long or a copper "Ufer" conductor encased in the concrete building foundation as indicated on the drawings.

PART 3 - EXECUTION

3.01 INSTALLATION:

A. Grounding "made electrode" rods shall be located in the nearest usable planting area, where not otherwise indicated on the drawings, and each electrode shall terminate within a concrete yard box installed flush with finish grade. In planting areas, concrete yard box shall be 2" above planting surfaces.

B. Rods shall be driven to a depth of not less than 8' 0". Electrodes shall have a resistance to ground of not more than 25 ohms if practicable. If the resistance exceeds 25 ohms, two or more electrodes connected in parallel shall be provided. The minimum number and size of ground rods shall be as required by State Electrical Safety Orders. Electrodes shall be separated from one another by not less than 6' 0". Parallel electrodes shall be connected together with approved fittings and approved grounding conductors in galvanized rigid steel conduit, buried not less than 12" below finish grade.

C. The grounding resistance shall be tested by an approved independent testing laboratory in the presence of the District Inspector, District Electrical Maintenance Supervisor and the District Engineer. The test results shall be submitted to the District Maintenance Supervisor on an official form for file with copies distributed to the District Inspector and Electrical Consulting Engineer.

END OF SECTION

FRESNO UNIFIED SCHOOL DISTRICT
REV DATE: 12/22/15

SECTION 26 05 53 – IDENTIFICATION FOR ELECTRICAL SYSTEMS

PART 1 – GENERAL

1.1 RELATED DOCUMENTS:

A. Drawings and general provisions of the Contract, including General Section 00700 and Division 1 Specification Sections, apply to this Section.

1.2 SUMMARY:

A. This Section includes identification of electrical materials, equipment, and installations.

1.3 SUBMITTALS:

A. General: Submit each item in this Paragraph according to the Conditions of the Contract and Division 1 Specification Sections.

B. Product Data for each type of product specified.

C. Schedule of identification nomenclature to be used for identification signs and labels.

D. Samples for each color, lettering style, and other graphic representation required for identification materials; samples of labels and signs.

1.4 QUALITY ASSURANCE:

A. Comply with California Electrical Code.

B. Comply with ANSI C2.

1.5 SEQUENCING AND SCHEDULING:

A. Coordinate installing electrical identification after completion of finishing where identification is applied to field-finished surfaces.

B. Coordinate installing electrical identifying devices and markings prior to installing acoustical ceilings and similar finishes that conceal such items.

PART 2 – PRODUCTS

2.1 MANUFACTURERS

A. Manufacturers: Subject to compliance with requirements, provide products by one of the following:
   1. Brady USA, Inc.; Industrial Products Division.
   2. Carlton Industries, Inc.
   3. Cole-Flex Corp.
   4. EMED Co., Inc.
   5. Ideal Industries, Inc.
   6. Panduit Corp.

2.2 RACEWAY AND CABLE LABELS

A. Manufacturer's Standard Products: Where more than one type is listed for a specified application, selection is Installer's option, but provide single type for each application category. Use colors prescribed by ANSI A13.1, California Electrical Code, and these Specifications.

B. Conform to ANSI A13.1, Table 3, for minimum size of letters for legend and minimum length of color field for each raceway or cable size.
   1. Color: Black legend on orange field.
   2. Legend: Indicates voltage and services.

C. Adhesive Labels: Preprinted, flexible, self-adhesive vinyl. Legend is over-laminated with a clear, weather- and chemical-resistant coating.

D. Pretensioned, Wraparound Plastic Sleeves: Flexible, preprinted, color-coded, acrylic bands sized to suit the diameter of the line it identifies and arranged to stay in place by pretensioned gripping action when placed in position.

E. Colored Adhesive Tape: Self-adhesive vinyl tape not less than 3 mils thick by 1 to 2 inches wide (0.08 mm thick by 25 to 51 mm wide).

F. Underground Line Warning Tape: Permanent, bright-colored, continuous-printed, vinyl tape with the following features:
   1. Size: Not less than 6 inches wide by 4 mils thick (152 mm wide by 0.102 mm thick).
   2. Compounded for permanent direct-burial service.
   3. Embedded continuous metallic strip or core.
   4. Printed Legend: Indicates type of underground line.

G. Tape Markers: Vinyl or vinyl-cloth, self-adhesive, wraparound type with preprinted numbers and letters.

H. Aluminum, Wraparound Marker Bands: Bands cut from 0.0140-inch (0.4 mm) thick aluminum sheet, with stamped or embossed legend, and fitted with slots or ears for permanently securing around wire or cable jacket or around groups of conductors.

I. Plasticized Card-Stock Tags: Vinyl cloth with preprinted and field-printed legends. Orange background, except as otherwise indicated, with eyelet for fastener.

J. Aluminum-Faced Card-Stock Tags: Weather-resistant, 18-point minimum card stock faced on both sides with embossable aluminum sheet, 0.002 inch (0.05 mm) thick, laminated with moisture-resistant acrylic adhesive, and punched for the fastener. Preprinted legends suit each application.

K. Brass or Aluminum Tags: Metal tags with stamped legend, punched for fastener. Dimensions: 2 x 2 inches (51 x 51 mm) x 0.05 inch (1.3 mm).

2.3 ENGRAVED NAMEPLATES AND SIGNS:

A. Manufacturer's Standard Products: Where more than one type is listed for a specified application, selection is Installer's option, but provide single type for each application category. Use colors prescribed by ANSI A13.1, California Electrical Code, and these Specifications.

B. Engraving stock, melamine plastic laminate, 1/16-inch (1.6 mm) minimum thick for signs up to 20 sq. in. (129 sq. cm), 1/8-inch (3.2 mm) thick for larger sizes.
   1. Engraved Legend: Black letters on white face.
   2. Punched for mechanical fasteners.

C. Baked-Enamel Signs for Interior Use: Preprinted aluminum signs, punched for fasteners, with colors, legend, and size as indicated or as otherwise required for the application. 1/4-inch (6.4 mm) grommets in corners for mounting.

D. Exterior, Metal-Backed, Butyrate Signs: Weather-resistant, nonfading, preprinted, cellulose acetate butyrate signs with 0.0396 inch (1 mm) galvanized steel backing, with colors, legend, and size appropriate to the application. 1/4-inch (6.4 mm) grommets in corners for mounting.

E. Fasteners for Plastic-Laminated and Metal Signs: Self-tapping stainless-steel screws or No. 10/32 stainless-steel machine screws with nuts and flat and lock washers.

2.4 MISCELLANEOUS IDENTIFICATION PRODUCTS:

A. Cable Ties: Fungus-inert, self-extinguishing, 1-piece, self-locking, Type 6/6 nylon cable ties with the following features:
   1. Minimum Width: 3/16 inch (5 mm).
   2. Tensile Strength: 50-lb. (22.3 kg) minimum.
   3. Temperature Range: Minimum 40 to 185 degrees F (minimum 4 to 85 degrees C).
   4. Color: As indicated where used for color-coding.

B. Paint: Alkyd-urethane enamel over primer as recommended by enamel manufacturer.

PART 3 – EXECUTION

3.1 INSTALLATION:

A. Install identification devices according to manufacturer's written instructions.

B. Install labels where indicated and at locations for best convenience of viewing without interference with operation and maintenance of equipment.

C. Lettering, Colors, and Graphics: Coordinate names, abbreviations, colors, and other designations used for electrical identification with corresponding designations used in the Contract Documents or required by codes and standards. Use consistent designations throughout the Project.

D. Sequence of Work: Where identification is to be applied to surfaces that require finish, install identification after completion of finish work.

E. Self-Adhesive Identification Products: Clean surfaces of dust, loose material, and oily films before applying.

F. Install painted identification as follows:
   1. Clean surfaces of dust, loose material, and oily films before painting.
   2. Prime Surfaces: For galvanized metal, use single-component, acrylic vehicle coating formulated for galvanized surfaces. For concrete masonry units, use heavy-duty, acrylic-resin block filler. For concrete surfaces, use clear, alkali-resistant, alkyd binder-type sealer.
   3. Apply one intermediate and one finish coat of silicone alkyd enamel.
   4. Apply primer and finish materials according to manufacturer's instructions.

G. Identify Raceways and Exposed Cables of Certain Systems with Color Banding: Band exposed and accessible raceways of the systems listed below for identification.

1. Bands: Pretensioned, snap-around, colored plastic sleeves; colored adhesive tape; or a combination of both. Make each color band 2 inches (51 mm) wide, complete encircling conduit, and place adjacent bands of two-color markings in contact, side by side.
2. Locate bands at changes in direction, at penetrations of walls and floors, at 50- foot (15 m) maximum intervals in straight runs, and at 25 feet (7.6 m) in congested areas.
3. Colors—as follows:
   a. Fire-Alarm System: Red.
   b. Fire-Suppression Supervisory and Control System: Red and yellow.
   c. Combined Fire-Alarm and Security System: Red and blue.
   d. Security System: Blue and yellow.
   e. Mechanical and Electrical Supervisory System: Green and blue.
   f. Telecommunications System: Green and yellow.

H. Install Circuit Identification Labels on Boxes: Label externally as follows:
   1. Exposed Boxes: Pressure-sensitive, self-adhesive plastic label on cover.
   2. Concealed Boxes: Plasticized card-stock tags.
   3. Labeling Legend: Permanent, waterproof listing of panel and circuit number or equivalent.

I. Identify Paths of Underground Electrical Lines: During trench backfilling, for exterior underground power, control, signal, and communications lines, install continuous underground plastic line marker located directly above line at 6 to 8 inches (150 to 200 mm) below finished grade. Where multiple lines installed in a common trench or concrete envelop, do not exceed an overall width of 16 inches (400 mm); use a single line marker.
   1. Limit use of line markers to direct-buried cables.
   2. Install line marker for underground wiring, both direct buried and in raceway.

J. Color-Code Conductors: Secondary service, feeder, and branch circuit conductors throughout the secondary electrical system.
   1. 208/120-V System--as follows:
      a. Phase A: Black.
      b. Phase B: Red.
      c. Phase C: Blue.
      d. Neutral: White.
      e. Ground: Green.
   2. 480/277-V System--as follows:
      a. Phase A: Brown.
      b. Phase B: Orange.
      c. Phase C: Yellow.
      d. Neutral: Grey.
      e. Ground: Green.

   3. Factory-apply color the entire length of the conductors, except the following field- applied, color-coding methods may be used in lieu of factory-coded wire for sizes larger than No. 10 AWG.
      a. Colored, pressure-sensitive plastic tape in half-lapped turns for a distance of 6 inches (150 mm) from terminal points and in boxes where splices or taps or made. Apply the last two turns of tape with no tension to prevent possible unwinding. Use 1-inch (25 mm) wide tape in colors as specified. Adjust tape bands to avoid obscuring cable identification markings.
      b. Colored cable ties applied in groups of 3 ties of specified color to each wire at each terminal or splice point starting 3 inches (76 mm) from the terminal and spaced 3 inches (76 mm) apart. Apply with a special tool or pliers, tighten to a snug fit, and cut off excess length.
   4. For all system voltages:
      a. Isolated ground conductors: Green with yellow stripe.
      b. Mark with a 1” band of green tape, followed by a 1” band of yellow tape, followed by a 1” band of green tape.

K. Power Circuit Identification: Use metal tags or aluminum wraparound marker bands for cables, feeders, and power circuits in vaults, pull boxes, junction boxes, manholes, and switchboard rooms.
   1. Legend: 1/4 inch (6.4 mm) steel letter and number stamping embossing with legend corresponding to indicated circuit designations.
   2. Fasten tags with nylon cable ties; fasten bands using integral ears.

L. Apply identification to conductors as follows:
   1. Conductors to be extended in the future: Indicate source and circuit numbers.

2. Multiple power or lighting circuits in the same enclosure: Identify each conductor with source, voltage, circuit number, and phase. Use color-coding for voltage and phase indication of secondary circuit.
3. Multiple control communications circuits in the same enclosure: Identify each conductor by its system and circuit designation. Use a consistent system of tags, color-coding, or cable marking tape.

M. Apply warning, caution, and instruction signs and stencils as follows:
1. Install warning, caution, and instruction signs where indicated or required to ensure safe operation and maintenance of electrical systems and of items to which they connect. Install engraved, plastic-laminated instruction signs with approved legend where instructions or explanations are needed for system or equipment operation. Install butyrate signs with metal backing for outdoor items.
2. Emergency-Operating Signs: Install engraved laminate signs with white legend on red background with minimum 3/8 inch (9 mm) high lettering for emergency instructions on power transfer, load shedding, and other emergency operations.

N. Install Identification as follows:
1. Apply equipment identification labels of engraved plastic laminate on each major unit of equipment, including central or master unit of each system. This includes communication, signal, and alarm systems, unless units are specified with their own self-explanatory identification. Except as otherwise indicated, provide a single line of text with 1/2 inch (13 mm) high lettering on a 1 1/2 inch (38 mm) high label; where two lines of text are required, use lettering 2 inches (51 mm) high. Use white lettering on black field. Apply labels for each unit of the following categories of equipment.
   a. Panel boards, electrical cabinets, and enclosures.
   b. Access doors and panels for concealed electrical items.
   c. Electrical switchgear and switchboards.
   e. Motor control centers.
   f. Motor starters.
   g. Push-button stations.
   h. Contactors.
   i. Remote-controlled switches.
   j. Dimmers.
   k. Control devices.
   l. Transformers.
   m. Telephone switching equipment.
   n. Clock/program master equipment.
   o. TV/audio monitoring master station.
   p. Fire-alarm master station or control panel.
   q. Security-monitoring master station or control panel.

2. Apply designation labels of engraved plastic laminate for disconnect switches, breakers, push-buttons, pilot lights, motor control centers, and similar items for power distribution and control components above, except panel boards and alarm/signal components where labeling is specified elsewhere. For panel boards, provide framed, typed circuit schedules with explicit description and identification of items controlled by each individual breaker.

END OF SECTION

FRESNO UNIFIED SCHOOL DISTRICT
REV DATE: 07/01/09

SECTION 26 22 00 – LOW VOLTAGE TRANSFORMERS

PART 1 – GENERAL

1.01 DESCRIPTION:

A. Work Included:
1. Transformers as specified and as indicated.
2. Provide mounting and seismic anchorage for all transformers complying with regulations of the State of California.

B. Related Work:
1. Service Entrance: Section 16420.
2. Basic Electrical Requirements: Section 16010.
3. Basic Electrical Materials: Section 16050.
4. Grounding: Section 16450.

1.02 REQUIREMENTS:

A. Transformers, Dry Type: Distribution transformers shall be constructed and tested in accordance with ASA and NEMA Standards, and shall be wound with copper conductors. Performance of transformers shall be equal to or exceed ASA and NEMA published criteria.

B. Transformers shall be self-cooled type with Class H, NEMA, Group 111 insulation and a temperature rise of 150 ^{o} C under continuous full load conditions with an ambient of 400° C.

Transformers supplying voltage to wave altering devices (computers, electronic ballasts, etc.) shall be K rated.

C. Transformers shall be equipped with four 2 1/2% taps (2 above and 2 below normal voltage). Windings shall be of the fire-resistant type, designed for natural convection cooling through normal air circulation.

D. Core mounting frames and enclosures shall be of welded and bolted construction with sufficient mechanical strength and rigidity to withstand shipping, erection and short circuit stresses.

E. Enclosure cover plates shall be Code gauge sheet steel, captive bolted to the enclosure framework. Enclosure shall have suitable ventilating openings with rodent-proof screens. Enclosure shall be provided with lifting lugs and jacking plates as required.

F. Transformers shall be furnished complete with mounting channels and mounting bolts. Metal parts, except cores and core mounting frames, shall be cleaned, rust-proofed and given a heavy coating of an inert primer.

G. Transformers used indoors shall be “low noise.” They shall be provided with vibration dampers. Size and number of shock mounts shall be in accordance with manufacturer's recommendations.

1.02 SUBMITTALS:

A. All submittals shall be made in accordance with Section 01300.

B. Shop Drawings: Include make, catalog number, dimensions, finish, type, insulation, class design temperature and taps provided. Include regulation at 80% and 100% of full load, no load loss, full load loss, percent efficiency, percent impedance, noise level and continuous capacity rating. Provide a connection schematic.

C. Test Reports:
1. No-Load Losses.
2. Total Losses.
3. Applied Voltage.
4. Temperature Rise.
5. Induced Voltage.
6. Sound Level.
7. Impulse Test.

PART 2 – PRODUCTS

2.01 EQUIPMENT:

Transformers shall be by Square D, General Electric, or equal dry type (interior) all- copper windings.

PART 3 – EXECUTION

3.01 INSTALLATION:

A. Transformer core frame shall be installed level on shock absorbing pads within the enclosure.

B. Mounting bolts on floor-mounted transformers shall be extended into pads only and shall not be in direct contact with building structural members.

C. Flexible jumpers shall be installed for grounding continuity from enclosure to conduits.

3.02 VOLTAGE CHECK:

A. The Contractor shall set the taps on all transformers (which are a part of this contract) as necessary to provide satisfactory operating voltages with all present loads energized. A check shall be made in the presence of the District Inspector at a panel fed from each transformer and which is the farthest from the transformer. Voltages at the transformers ranging from 118 to 122 volts

inclusive, for 120-volt systems and proportionately equivalent for higher voltage systems, are acceptable.

B. The Contractor shall provide all instruments and accessories required to perform the checks. Volt meters shall be accurate within 1% and shall have scales permitting the voltage readings to be made on the upper half of the scale. Calibration of the meters shall be satisfactory to the District.

END OF SECTION

FRESNO UNIFIED SCHOOL DISTRICT
REV DATE: 07/01/09

SECTION 26 24 25 – PANELBOARDS

PART 1 - GENERAL

1.01 DESCRIPTION:

A. Work Included: Lighting and power distribution facilities, including panel boards.

B. Related Work:
1. Basic Electrical Requirements: Section 16010.
2. Basic Electrical Materials: Section 16050.
3. Grounding: Section 16450
4. General Lighting: Section 16509.

1.02 SUBMITTALS:

A. All submittals shall be made in accordance with Section 01300.

B. Shop Drawings: Include a front elevation, indicate circuit numbers, devices and ratings, cabinet dimensions, make, ratings, nameplate, location and capacity of equipment, size of gutters, type of mounting, finish and catalog number of locks.

1.03 DESIGN REQUIREMENTS:

A. Lighting and Appliances Panel boards:
1. Lighting and appliance panel boards shall be wall-mounted, enclosed, safety type with 277/480 volts, 4-wire or 120/208 volts, 4-wire surface or flush mounting, neutral mechanical equipment ground and main as indicated on the drawings or specified. First panel boards of each separate building shall be provided with main and/or sub-feeder circuit breakers where so indicated or specified.
2. Single-pole branches for 120/208 volt panels shall be molded case, bolt on, thermal magnetic circuit breakers with inverse time delay, trip-free, quick-make, quick-break mechanism and silver alloy contacts. Circuit breakers shall be rated 20 amps, 120 volts, except where otherwise indicated on the drawings, and the amp rating shall be marked on the handle and indicate "ON - OFF" and tripped positions. Single-pole branches for 277/480-volt panels shall be the same as for 120/208-volt panels, except they shall be thermal magnetic circuit breakers only with higher voltage rating. Ground fault interrupters shall be incorporated into circuit breakers where indicated and shall be listed by Underwriters' Laboratory as a ground fault device.
3. Two- and three-pole branch circuit shall be enclosed and shall be bolt-on, thermal magnetic with inverse time delay, non-tamperable, ambient compensated, single handle with no tie-bar, common-trip, quick-make and quick-break mechanism with silver alloy contacts. Circuit breakers shall be rated as indicated on the drawings.
4. Main and subfeeder circuit breakers shall be enclosed, bolt-on thermal magnetic type with inverse time delay, single-handle common-trip, quick-make, quick-break mechanism, corrosion resistant bearings and silver alloy contacts. Amp frame size and trip rating shall be

as indicated on the drawings. Breakers over 225 amperes shall have interchangeable trip units. The handles of main and subfeeder circuit breakers shall be under the cabinet door. Voltage rating shall be as indicated on the drawings.

5. All circuit breakers shall be one-piece, bolt-on type and shall meet the short circuit interrupting capacity requirements shown on the drawings. All one-pole, two-pole, three-pole circuit breakers shall be rated for minimum 10,000 amps interrupt capacity, unless otherwise indicated on the drawings.
6. All internal connections shall be made with plated copper bus bars, and the busses shall extend for the full length of the space available for branch circuit breakers. Feeder cable connectors shall be installed at point of feeder entrance. All terminals shall have copper conductors. Panel boards fed by conductors having over-current protection greater than 200 amps shall be protected on the supply side by over-current devices having a rating not greater than that of the panel board.
7. Except where otherwise indicated, circuit breakers shall be in two vertical rows connected to the bus bars in a distributed phase arrangement. Two-pole branches shall be balanced on the busses. Each single-pole branch shall be numbered adjacent to its circuit breaker with odd numbers on the left and even numbers on the right.
8. All specified circuit breaker spaces shall include necessary hardware required for future installation of the circuit breakers.

B. Panel board Cabinets:
1. Panel board cabinets shall be Code gauge galvanized steel or blue steel; fronts, doors, and trims shall be code gauge furniture steel. The width of the cabinets shall be 20".
2. Doors shall be cut true, shall accurately fit opening and finish smooth across the joints. Rabbets shall be inside. The hinges shall be entirely concealed, except for barrels and pins. Hinge flanges shall be welded to the door and trim. Each door shall be equipped with flush type lock, spring latching, Corbin lock for metal door, keyed to Yale LL 803 or LL 134.
3. Where contactors, time switches and control devices are specified or indicated to be installed within panel board cabinets, a separate compartment and lockable door shall be provided at the top of the cabinet for such devices. The door shall be sized as required to permit removal of the contactor and other devices intact. Gutters shall be provided at the sides and top of the compartment.

C. Panel Board Schedule:
The Contractor shall prepare a neatly type written schedule with the number or name of the room or area of the equipment served by each panel board circuit. The room numbers or names used shall match those as determined at the site and shall not necessarily be those used on the drawings. The schedule shall also indicate the panel designation, voltage and phase, the building and distribution panel or switchboard from which it is fed. The schedule shall be mounted in a frame under transparent plastic 1/32” thick on the inside of each panel board cabinet door.

D. Signal and Communication Terminal Cabinets:
1. All terminal cabinets shall conform in every respect to the Specifications for Panel board Cabinets, except as modified herein.
2. All terminal cabinets shall be flush type, unless otherwise noted, with 2" trim and separate door with lock over each section, unless otherwise indicated or specified. Cabinets shall be provided with barriers to separate each system. Cabinets over 24" in width shall be provided with double door and lock. Each terminal cabinet, or section of a terminal housing a separate system, shall measure 12" wide x 18" high x 5 3/4" deep, unless otherwise indicated on the drawings. Trims for sectional cabinets shall be of one-piece construction.

3. All terminal cabinets shall be equipped with 1/2” thick plywood backboards within the cabinets, and fastened in place with machine screws. Backboards shall be the largest size the cabinet and conduit terminations will permit.
4. Flush mounting terminal cabinets shall be finished as specified for flush mounting panel board cabinets. Surface mounted terminal cabinets shall be finished as specified for surface mounting panel board cabinets.

PART 2 - PRODUCTS

2.01 EQUIPMENT:

All panel boards shall be manufactured by Square D, General Electric or equal, unless otherwise specified by the District.

PART 3 - EXECUTION

3.01 INSTALLATION:

A. Fronts shall be flush type, unless otherwise indicated and shall be fastened to the cabinets with 1/4" No. 20, nickel plated oval headed machine screws and cup washers. Sufficient screws shall be installed to prevent buckling or warping of the panel front. Flush type fronts shall be aligned plumb and square and cabinet shall be drilled and tapped for cover screws at the site to accomplish this if necessary.

B. All surfaces of flush mounted panel board cabinets shall be galvanized. The fronts shall be given two coats of metal primer, and a finish coat of baked on gray enamel and shall not be installed on the cabinets until after the finish coats of paint have been applied to the wall and cabinet fronts and they are thoroughly dry. Screws and cup washers shall not be painted.

C. All surfaces of surface mounted cabinets and fronts shall be given one coat of metal primer and a finish coat of baked on gray enamel.

D. Panel board cabinets shall be rigidly supported in place independent of the conduits.

3.02 MODIFICTION OF EXISTING SURFACE MOUNTED PANELS:

A. When an existing flush mounted panel is to be abandoned. Remove existing bussing, breakers and covers. Install new panel with one of the following methods:
   1. Provide new weatherproof surface mounted cabinet over existing flush panel cabinet. New cabinet shall be sized to fit over existing panel with hinged padlock able door. Back cover of new cabinet shall be cut to fit the existing panel’s opening. Make sure old panel has clean surface for a sufficient ground. All cut edges shall be grounded smooth. Drill edge of new cabinets back cover and existing panel front and secure with ¼ 20 nuts and bolts, lockwashers, new cabinet shall be used as a pull box. See detail E-1.
   2. Provide new weatherproof surface mounted panel on wall, new panel shall have breakers per panel schedule. Secure to existing wall next to new surface cabinet. Run between new panel and new cabinet: one 2” C with new feeders to new panel: two 2” c with new wiring as required to connect existing and new branch wiring. See detail E-3.

3. Remove existing panel front, buss assembly, circuit breakers and ground bar, provide a new solid cover with a continuous gasket around parameter to blank off existing enclosure. New cover shall be manufactured of 12 ga. Sheet metal and shall be primer coated for final finish coat by the painting contractor. Attach new solid cover to existing panel enclosure with galv. Tamperproof screws. Contractor shall field verify exact dimensions of existing enclosure. Provide four 2-1/2" conduit nipples between existing panel. Pick up and extend existing feeders and all branch circuits to the new panel and reconnect to matching circuit breakers. Provide power distribution / terminal blocks as required. Bond and ground new panel per N.E.C. article 250. See detail E-2.

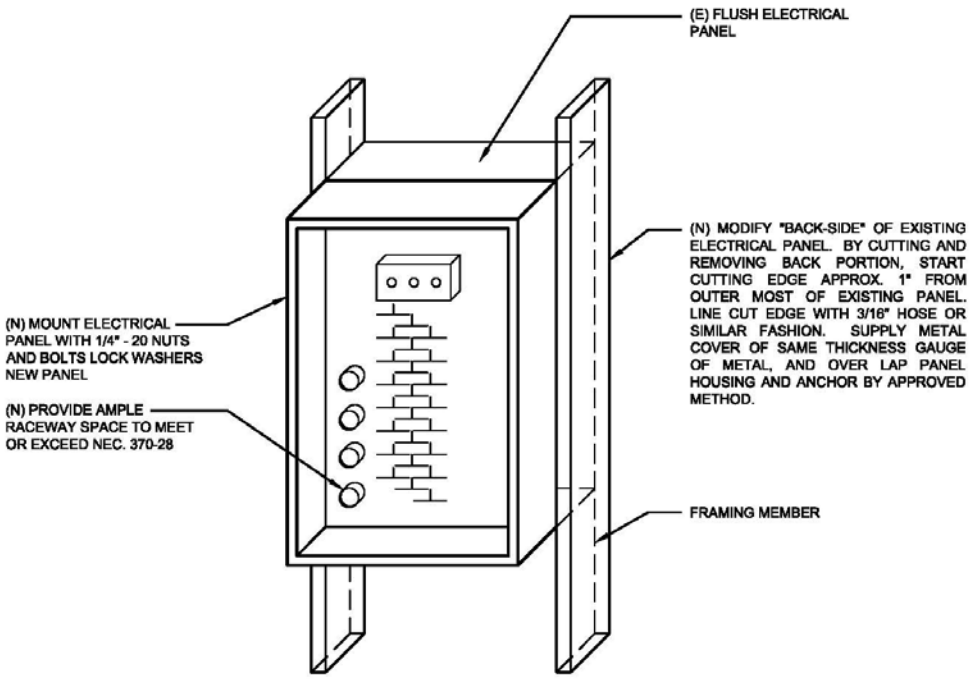

E-1 PANEL RETROFIT EXAMPLE

Fresno Unified School District	FRESNO UNIFIED SCHOOL DISTRICT	PANEL RETROFIT EXAMPLE	SCALE: N.T.S.
	MAINTENANCE DEPARTMENT		
	4600 N. BRAWLEY AVE. FRESNO, CA 93722 P: 559.457.3261 F: 559.457.3709	VARIOUS SITES	REVISION DATE: 07-01-09
			SHEET #: E-1

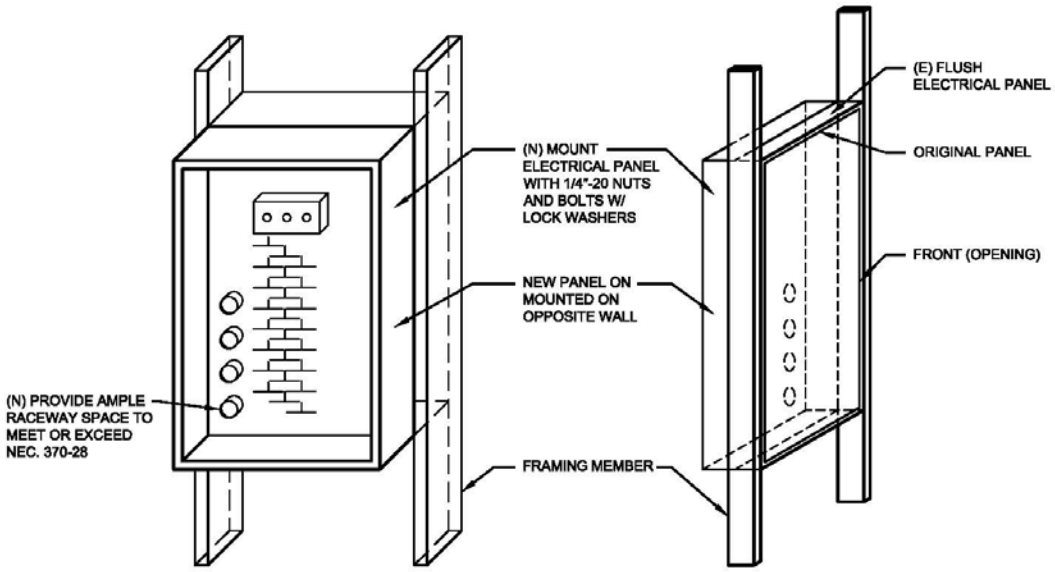

E-2 PANEL RETROFIT EXAMPLE

Fresno Unified School District	FRESNO UNIFIED SCHOOL DISTRICT	PANEL RETROFIT EXAMPLE	SCALE: N.T.S.
	MAINTENANCE DEPARTMENT		
	4600 N. BRAWLEY AVE. P: 559.457.3261 FRESNO, CA 93722 F: 559.457.3709	VARIOUS SITES	REVISION DATE: 07-01-09
			SHEET #: E-2

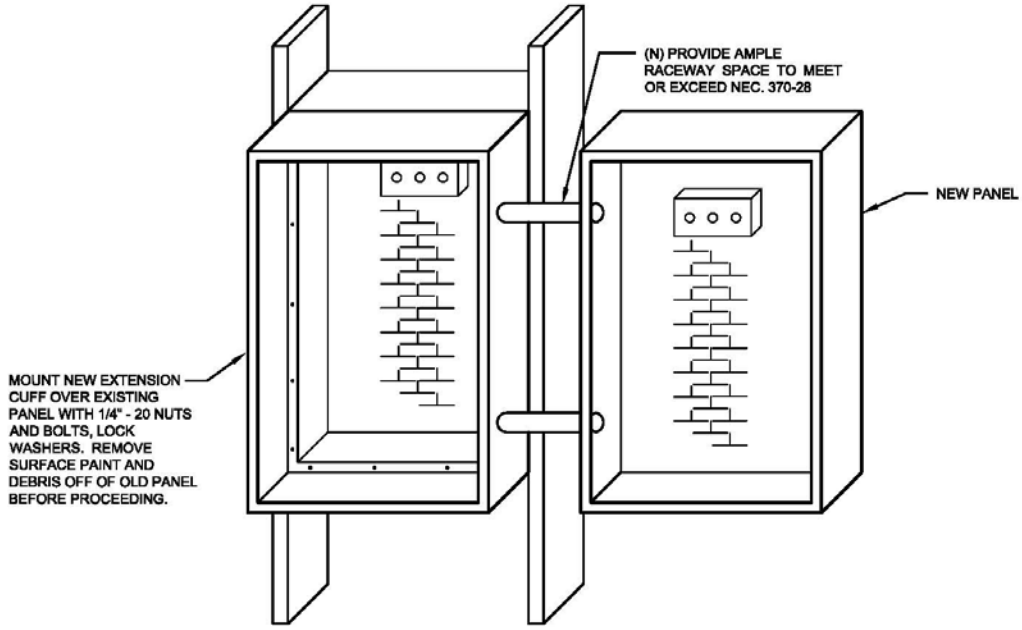

E-3 PANEL RETROFIT EXAMPLE

Fresno Unified School District	FRESNO UNIFIED SCHOOL DISTRICT	PANEL RETROFIT EXAMPLE	SCALE: N.T.S.
	MAINTENANCE DEPARTMENT		
	4600 N. BRAWLEY AVE. FRESNO, CA 93722 P: 559.457.3261 F: 559.457.3709	VARIOUS SITES	REVISION DATE: 07-01-09
			SHEET #: E-3

END OF SECTION

SECTION 26 50 00 – LIGHTING

PART 1 – GENERAL

1.01 SCOPE:

A. Provide lighting fixtures of sizes, types and rating as indicated; complete with, but not necessarily limited to, housings, LED lamps/arrays, reflectors, lenses, drivers, wiring, and mounting hardware.

1.02 DESIGNATION:

A. Unless otherwise shown on the plans, fixture type designation for an individual fixture shall be typical for similarly indicated fixtures within the entire room or defined area.

B. Unless otherwise shown on the plans, fixtures mounted in a continuous row shall be of the same type as any individual designated fixture within the row.

C. In the event a fixture is un-designated on plans, it shall be of the same type as fixtures of similar function within rooms or areas.

1.03 COORDINATION:

A. Confirm compatibility and interface of other materials with luminaire and ceiling system. Report discrepancies to the Architect or Electrical Engineer, and defer ordering until clarified.

B. Supply plaster frames, trim rings, and back boxes to other trades.

C. Coordinate with Division Mechanical to avoid conflicts between luminaire supports, fittings & mechanical equipment.

D. All fixtures shall be coordinated with the architectural reflected ceiling plan. If any discrepancies occur, the Architect or Electrical Engineer must be notified in writing before installation is started.

1.04 SUBMITTAL:

Make product submittal per Section 260000.

A. Product Data shall include complete list of fixtures along with catalog cuts or detailed drawings of each.

B. Shop Drawings: Provide fixture construction details for fixtures going into 1' x 1' rectangular or gypsum board ceilings, and custom fabricated fixtures.

PART 2 – PRODUCTS

2.01 ACCEPTABLE MANUFACTURERS:

The fixtures described in the light fixture schedule on the drawings are to be used as a standard of quality to be maintained. Substitute items of same function and performance are acceptable in conformance with Section 260500.

2.02 FIXTURES: General

A. Provide fixtures complete with all component parts to make a complete installation. Fixtures shall have a suitable interior means of grounding the enclosure.

B. All fixtures shall bear the U.L. label and shall be suitable for installation location.

C. All attaching devices for recessed or surface mounted fixtures mounted in the ceiling shall be of formed or rolled steel and of sufficient strength to prevent movement of fixture after installation.

D. The Architect or Electrical Engineer shall have the right to reject any fixture damaged due to improper packaging. Any fixture with broken or bent metal, broken lenses, or an appearance deemed not to be normal, may also be rejected by the Architect or Electrical Engineer at the expense of the Contractor.

E. Provide gasketing, stops, and barriers to form light traps and prevent light leaks.

F. Trademarks or Monograms: There shall be no visible trademarks or monograms on the lighting fixtures.

G. Recessed Fixture Trims and Doors: The Electrical Contractor shall use the following fixture trim frame designs unless specified otherwise.

1. Lay-in frames: Lay-in frames for all exposed "T" ceiling systems.

2. Flanged Trims: Flanged trims for plasterboard, spline or metal lathe and plaster ceiling systems. Provide plaster or mounting frames where required.

3. All hinged doors to have flat steel lens design unless specified otherwise.

4. All Trim Frames and Doors: All trim frames and doors to be baked white enamel finish unless specified otherwise.

5. Hidden "T" Systems: Electrical Contractor to provide vinyl fixture trim-outs for all fixtures installed in hidden "T" systems to complete unfinished edge of tile openings.

2.03 LED DRIVERS:

A. Drivers shall be high power factor, constant current type.

B. Drivers shall be equipped with 0-10V dimming, unless specifically noted otherwise.

2.04 LAMPS:

A. Lighting fixtures shall be installed complete with factory installed LED lamps as described in schedules and herein.

B. LED lamps that are screw base, aftermarket, or are not factory installed, are not permitted.

2.05 EXTERIOR FIXTURES:

A. Metal parts of exterior fixtures exposed to weather conditions shall be constructed of cast or spun aluminum, cast bronze, stainless steel or other nonferrous metals available to withstand exposure.

B. Steel fixtures installed in damp or wet locations shall have zinc-chromate or equal primer.

C. Provide gaskets on all trims and housing.

2.05 WET LOCATIONS:

All lighting fixtures installed in wet or damp locations shall have U.L. approved "wet" or "damp" location labels visible in interior of fixtures.

2.06 CONTROLS

A. Wall Switch: Greengate #ONW-D-1001-DMV, or equal.

B. Wall Large Area: Greengate #OAWC-DT-120W-R, or equal.

C. Ceiling Sensor: Greengate #OAC-DT-2000-R, or equal.

D. Power Pack: Greengate #SP20-MV, or equal.

PART 3 – EXECUTION

3.01 INSTALLATION OF LIGHTING FIXTURES:

A. Fixture installation shall conform to all applicable standards for installation, mounting, wiring, and quality.

B. All fixtures shall be grounded and bonded in accordance with applicable codes. Where fixtures are installed in rows, a bonding screw shall be used to maintain bonding integrity from fixture to fixture.

C. All fixtures, lenses, and other trim shall be aligned, cleaned, free of paint and blemishes before final acceptance.

D. Surface-Mounted Fixtures: The Electrical Contractor shall provide surface-mounted incandescent or fluorescent fixtures with UL approval for direct mounting on the various ceilings unless specified otherwise. Spacers will not be approved.

E. Installation of recessed fixtures in accessible-type suspended ceilings shall be such that the fixtures will exactly suit the type of ceilings used without altering the fixture or the ceiling. Each fixture shall be wired with a piece of flexible conduit sufficiently long to remove fixture enclosure from ceiling without disconnecting unit. Fixture manufacturer shall prepare drawings or catalog sheets in which all details of fixture installation are carefully analyzed. Contractor to submit these shop drawings for approval. If clearance above "T" bar system is too restricted in "tip-in" fixture, the Electrical Contractor shall coordinate with acoustic ceiling installer by leaving one cross "T" off until the cross"T" shall be secured into its proper place.

F. All fixtures shall be supported from the building structural members or from bridging attached to the structural members. Provide all necessary blocking and hardware so that fixtures hang true, square, plumb, and in proper alignment. Recessed fluorescent fixtures in T-bar ceilings shall have minimum of two #12 steel hanger wires from each 4-foot fixture, one at either end.

G. All LED drivers shall operate within NEMA sound ratings. Noisy or otherwise defective drivers shall be replaced.

H. All lamps shall be operating and all fixtures shall be clean at time of final inspection.

I. Recessed Fixtures shall have their support brackets screwed into ceiling channels.

3.02 RETROFIT OF LIGHTING FIXTURES

A. Where lamps are called for in the “Replacement” columns of the site worksheets, the contractor shall furnish and install the lamps listed in the existing fixtures. In general, lamp replacements are to be installed in decorative fixtures or fixtures that are difficult to replace. Some lamps operate on the existing ballast, and some require removal of the existing ballast and connection to line voltage – refer to the fixture schedule. Remove and dispose of the existing lamps and/or ballasts.

B. Where retrofit fixtures are called for in the “Replacement” columns of the site worksheets, the contractor shall furnish and install the fixture listed in the location of the existing fixture. In general, retrofit fixtures are to be installed in 2x2, 2x4, and downlight locations at interiors, and at surface non-decorative fixtures and floodlights at exteriors. Remove and dispose of the existing fixture, ballast, and lamps.

C. Where retrofit light fixtures are surface mounted, and the new fixture “footprint” does not cover the old footprint, the contractor shall paint the surface underneath to match the existing surrounding finishes.

D. Existing lamps that have been removed or replaced shall be disposed of in accordance with hazardous materials regulations. Do not dispose of fluorescent lamps or ballasts in

bins not designated or destined for hazardous material disposal.

3.03 RETROFIT OF OCCUPANCY SENSORS:

A. Where sensors are called for in the “Occ Sensors Req’d” columns of the site worksheets, the contractor shall furnish and install the listed controls, along with power packs as required to tie the controls into the lighting system in that room or area.

B. Wall switch sensors shall replace existing switches and be tied to the switch leg, or switch legs, as is existing. Provide a new cover plate of the same materials as the existing building. The color of the switch and the cover plate shall match existing.

C. Wall large area sensors are to be installed in large areas (e.g., multi-purpose rooms). The sensors shall be installed in locations that allow complete coverage of the room or area, and shall be mounted at heights recommended by the manufacturer. Low voltage wiring may be installed without raceways at concealed spaces in walls, but shall require surface raceway at exposed locations.

D. Ceiling sensors are to be installed in classrooms, offices, restrooms, and similar spaces. The sensors shall be installed in locations that allow complete coverage of the room, and shall be mounted in locations recommended by the manufacturer. Low voltage wiring may be installed without raceways at concealed spaces in walls, but shall require surface raceway at exposed locations.

E. Power packs shall be installed in concealed locations such as attic spaces. The contractor shall add these in with the existing lighting control for each room or area. Provide additional surface raceway (exposed), or conduit and wiring, or MC cable (concealed), as required to tie in these controls. The occupancy sensor power packs and occupancy sensor wall switch sensors shall be installed such that it will open power ahead of any switches. At least one power pack is required for each low voltage occupancy sensor.

F. Where existing controls are present, the existing controls shall be removed and replaced with new. Existing control and power wiring may be reused in place, provided the existing wiring is less than 50 years old and is not damaged in any way. The contractor shall not remove existing wiring, then reuse that wiring for the new installation.

3.04 FIELD QUALITY CONTROL:

A. Upon completion of installation of interior lighting fixtures, and after building circuitry has been energized, apply electrical energy to demonstrate capability and compliance with requirements. The Contractor shall replace at his expense all noisy fixtures, broken or cracked lenses or other defects. Where possible, correct malfunctioning units at site, then retest to demonstrate compliance; otherwise, remove and replace with new units, and proceed with testing.

B. At the time of Substantial Completion, replace lamps in interior lighting fixtures which are observed to be noticeably dimmed after Contractor's use and testing, as judged by Electrical Engineer.

3.05 ADJUSTMENT AND CLEANING:

A. Clean interior lighting fixtures of dirt and debris.

B. Protect installed fixtures from damage during remainder of construction period.

END OF SECTION

FRESNO UNIFIED SCHOOL DISTRICT
REV DATE: 01/20/17

SECTION 27 20 00 – DATA COMMUNICATIONS

PART 1 - GENERAL

1.1 SCOPE

A. Furnish and install the following:
   1. All Category 6 Data Cable, Jacks and related terminations.
   2. All Fiber Optic Cable, Jacks, Inner duct, and related terminations.
   3. Wiring Cabinets complete with necessary power distribution, UPS, Category 6 and Fiber Optic Patch Panels and required Patch Cables.
   4. Testing and certification of Fiber Optic cable and terminations.
   5. Testing and certification of Category 6 cable and terminations.

B. Install, connect, and patch in the following Owner Furnished Items:
   1. Gateways
   2. Switches
   3. Wireless Access Points
   4. VoIP Gateway and PBX

C. Where Reference is made to Category 6 in this Specification it shall mean the latest currently available EIA/TIA Category 6 Standards, including the latest revisions to these standards.

1.2 QUALITY ASSURANCE

A. Contractor shall have successful experience in executing projects of this type and scope.
   1. Submit with Bid, a list of projects to provide proof of required experience, including the following:
      a. Description of project.
      b. Name, address and phone number of Owner.
      c. Name and phone number of Owner's contact person having knowledge of the project.
      d. Approximate cost of the data cabling and associated electrical work for the project.
   2. The Proposal shall include a list of all workmen the contractor proposes to use for the data-cabling portion of this project.
   3. This list shall include:
      a. Name of worker.
      b. Worker's resume showing training and experience.
      c. List of contact persons and their telephone numbers.
   4. Each worker proposed for work in the data cabling portion of this work shall present a Certificate of Completion of Training in Fiber Optic and Category 6 cabling.

a. Only workers with Certificates of Fiber Optic training may perform work in that area.
b. Only workers with Certificates of Category 6 training may perform work in that area.

5. The District Inspector or Project Manager may ask any or all data cabling workers to demonstrate their skill level before performing any work or continuing work.
6. If, in the opinion of the District, any worker is found to be deficient in this area, the Contractor must immediately provide necessary training to remove the deficiency or replace the worker with one having the required skills.
7. The Contractor shall use adequate numbers of skilled workmen who are thoroughly trained and experienced on the necessary crafts and completely familiar with the specified requirements and methods needed for the proper performance of the work.
8. The Contractor must provide a Project Manager who has demonstrated the ability to supervise a Data LAN project.
9. The Project Manager must be available to be interviewed by FUSD and/or their representative, and must be deemed acceptable by FUSD and/or their representative.
10. Acceptance will not be unreasonably withheld.
11. The Project Manager must be available to attend meetings as required.
12. The work of this section shall conform to California Code of Regulations, Part 3, and all other applicable codes and standards.
13. Only a qualified Contractor holding licenses required by legally constituted authorities having jurisdiction over the work shall do work.
14. Contractor shall have completed similar projects of equal scope to systems described herein and shall have been engaged in business of supplying and installing specified type of systems for at least five years.
15. Use equipment manufacturers certified contractors.
16. Manufacturer shall warranty availability of spare parts common to proposed system for a period no less than that stipulated within the California Multiple Award Schedule (CMAS) terms and conditions.
17. If no time period is contractually stipulated, the Contractor shall provide a warranty of five years.
18. Contractor shall warranty that all work executed and materials furnished shall be free from defects of material and workmanship for a period of two years from acceptance date of Contract Completion, excluding specific items of work that require a warranty of a greater period as set forth in this Specification.
19. Immediately upon receipt of written notice from the District, the Contractor shall repair or replace, at no expense to the District, any defective material or work that may be discovered before final acceptance of work or within warranty period; any material or work damaged thereby; and adjacent material or work that may be displaced in repair or replacement.
20. Examination of or failure to examine work by the District shall not relieve Contractor from these obligations.
21. Contractor shall have a service organization capable of responding to warranty service requests within 24 hours of receipt of written notification and resolution within five working days for MDF equipment and 15 working days for IDF equipment located either in the IDF or computer laboratory.
22. If Contractor fails to repair or replace material or work indicated above within 15 days of receiving written notice, the District, with its own personnel or by Contract,

may proceed with repair or replacement and assess cost against Contractor, if Contractor does not respond accordingly.

23. Persons skilled in trade represented by work, and in accordance with all applicable building codes, shall install system in accordance with best trade practice.
24. Contractor shall include in the Material List Submission copies of the manufacturer's certifications that the Contractor is an authorized distributor of the submitted manufacturers' products and has been adequately trained in the installation of those products.
25. This applies to all fiber optic components and fiber optic cable.
26. Contractor shall include in the Material List Submission a list of five projects of similar scope acceptable to the District and shall have a service organization capable of responding to warranty service requests within 24 hours of receipt of written notification and resolution within one day for MDF equipment and five days for IDF equipment located either in the classroom, IDF or computer laboratory.
27. Contractor shall include the telephone number of the customer's client contact for each project and a letter signed by a corporate officer, partner, or Owner of the contracting company describing the service capability of the company and stating the company's commitment to maintain that service capability through the warranty period.

B. All work and materials shall be in full accordance with the latest rules and regulations of the following codes, industry standards and references:

1. State of California:
   a. Title 24, Building Standards, State of California.
   b. Occupational Safety and Health Act (OSHA).
   c. Title 8, Electrical Safety, State of California.
   d. Title 19, California Code of Regulations.
2. Telecommunications Industry Association/Electronics Industry Association(TIA/EIA).
   a. ANSI/TIA/EIA-STD-RS455, Standard Test Procedures for Fiber Optic Fibers, Transducers, Connecting and Terminating Devices.
   b. Telecommunications Industry Association/Electronic Industry Association (TIA/EIA) Standard 569, Commercial Building Standard for Telecommunications Pathways and Spaces.
3. BICSI-Telecommunications Distribution Methods Manual, Volumes #1 and 2.
4. Underwriters Laboratories Inc. (UL): Applicable listings and ratings.
5. UL LAN Cable Certification Level 5.
6. National Electric Code (Articles 770, 800, latest issue).
7. National, State, and Local Occupational Safety and Health Administration (OSHA) building and fire codes.
8. ANSI/TIA/EIA Telecommunications Building Wiring Standards.
9. ANSI/TIA/EIA-568-A, Commercial Building Telecommunications Cabling Standard (October 1995).
10. ANSI/TIA/EIA-568-A-2, Corrections and Additions to TIA/EIA-568-A-2(August1998).
11. ANSI/TIA/EIA-568-A-3, Addendum No. 3 to TIA/EIA-568-A (December 1998).
12. ANSI/TIA/EIA-568-A-5, Transmission Performance Specifications for 4-Pair 100 ohm Category 5E Cabling (February 2000).
13. ANSI/TIA/EIA-568-B-3, Optical Fiber Cabling Components Standard (March2000).
14. ANSI/TIA/EIA-569-A, Commercial Building Standard for Telecommunications Pathways and Spaces (February 1998).
15. ANSI/TIA/EIA-569-A-1, Commercial Building Standard for Telecommunications

Pathways and Spaces Addendum 1 – Surface Raceways (March 2000).
16. ANSI/EIA/TIA-598-A, Optical Fiber Cable Color Coding (May 1995).
17. ANSI/TIA/EIA-606, The Administration Standard for the Telecommunications Infrastructure of Commercial Building (February 1993).
18. ANSI/TIA/EIA-607, Commercial Building Grounding and Bonding Requirements for Telecommunications (August 1994).
19. ANSI/TIA/EIA-758, Customer-Owned Outside Plant Telecommunications Cabling Standard (April 1999).
20. ANSI/TIA/EIA-758-1, Addendum No. 1 to TIA/EIA-758, Customer-Owned Outside Plant Telecommunications Cabling Standard (March 1999).
21. TIA/EIA TSB-67, Transmission Performance Specifications for Field Testing of Unshielded Twisted-Pair Cabling Systems (October 1995).
22. TIA/EIA TSB-72, Centralized Optical Fiber Cabling Guidelines (October1995).
23. Institute of Electrical and Electronic Engineers (IEEE) 802.3 (Ethernet), 802.3Z (Gigabit Ethernet over optical fiber), 802.3ab (Gigabit Ethernet over 4-pair Category 6 or higher), 802.11 (Wireless LAN).
24. BICSI Telecommunications Distribution Methods Manual (2000 or latest).
25. FCC Part 68.50.
26. National Electrical Manufacturer's Association (NEMA).
27. National Fire Protection Association (NFPA), NFPA-70.
28. CCR Part 3 - California Electrical Code.
29. CCR Part 2 - Uniform Building Code.
30. ITU H.225.0, Call Signaling Protocols and Media Stream Packetization for Packet-based Multimedia (Includes Q.321 and RAS).
31. ITU H.223.0 Annex G, Gatekeeper to Gatekeeper (Interdomain)Communication.
32. ITU H.235, Security and Encryption for H-Series Multimedia Terminals.
33. ITU H.245, Control Protocol for Multimedia Communication.
34. ITU H.450.x, Supplementary Services for Multimedia.
35. Generic Functional Protocol for the Support of Supplementary Services in H.323.
36. Call Transfer.
37. Call Diversion.
38. Call Hold.
39. Call Park and Pick-up.
40. Call Waiting.
41. Message Waiting.
42. Identification Services.
43. ITU H.323, Packet-based Multimedia Communications Systems.
44. ITU H.323 Annex E, Call Connection Over UDP.
45. ITU H.323 Annex F, Single-use Device.
46. ITU I.120 Series, Data Protocols for Multimedia Conferencing.

C. Nothing in the drawings or specifications is to be construed to permit work not conforming to the codes or standards.

D. These codes or standards are to be considered minimum requirements.

E. Should the plans or specifications call for material, methods or construction of a higher standard, the plans or specifications shall govern.

1.3 EXISTING CONDITIONS

A. Contractor shall be held to have visited the site prior to submitting proposal to determine existing conditions, nature of materials to be encountered and to evaluate other information affecting the work to be performed.

B. Protect and maintain all existing pipe lines, conduits, and structures.

C. Do not interfere with their safe operation.

D. Should damage occur notify the appropriate utility and the District at phone number 559-457-3000.

E. Damage costs are the responsibility of the contractor.

PART 2 - PRODUCTS

2.1 INSIDE PLANT CATEGORY 6 CABLE, UTP:

A. Cable shall meet, as a minimum, the requirements of the latest currently available EIA/TIA Category 6 standards.

B. Cable shall be round 24 AWG 4 pair with solid conductors, non-plenum, high-density polyethylene, with flame retardant PVC Jacket.

C. Individual conductor insulation shall be color coded per TIA/EIA specifications.

D. Characteristic Impedance shall be 100 Ohms ± 15 Ohms.

E. Technical Data Electrical:

Freq. MHz	SRL db	RL db	Atten.\100 m Max db	PS-NEXT Min db	NEXT Min db	ACR Min db	PS-ACR Min db
1	23	19	2.0	72.3	74.3	72.3	70.4
4	23	21	3.8	63.2	65.2	61.4	59.4
10	23	23	6.0	57.3	59.3	53.3	51.3
16	23	23	7.6	54.2	56.2	48.6	46.6
20	23	23	8.5	52.7	54.7	46.2	44.2
31.25	22	22	10.7	49.8	51.8	41.1	39.1
62.5	21	20	15.5	45.3	47.3	31.8	30.0
100	20	18	19.9	42.3	44.3	24.4	22.9
155	19	17	25.3	39.4	41.4	16.1	15.3
200	18	16	29.2	37.7	39.7	10.5	10.3
250	18	15	33.0	36.3	38.3	5.3	3.3
350	17	14	40.0	34.1	36.1	---	---
500	16	13	49.2	31.8	33.6	---	---

Freq. MHz	ELFEXT Min db	PS-ELFEXT Min db	LCL Min db	LCTL Max db
1	67.8	65.8	50	40

4	55.7	53.7	50	40
10	47.8	45.8	50	40
16	43.7	41.7	48	38
20	41.7	39.7	47	37
31.25	37.9	35.9	45	35
62.5	31.8	29.8	42	32
100	27.8	25.8	40	30
155	23.9	21.9	---	---
200	21.7	19.7	---	---
250	19.8	17.8	---	---
350	---	---	---	---
500	---	---	---	---

F. Category 6 Cable shall be Berk-Tek # LANmark 1000 series, or equal.

2.2 CATEGORY 6 OUTSIDE PLANT CABLE, UTP:

A. Outside plant Category 6 cable shall be designed and constructed for installation in outside underground conduits and shall meet the transmission requirements for TIA/EIA 568-A, Category 6, Horizontal Cables.

B. Cable construction shall utilize a U/V-resistant Polyethylene jacket with water blocking flooded core.

C. Category 6 Outside Plant Cable shall have the following characteristics:

Freq.	Atten.\100m		NEXT	ACR	PS-NEXT	PS-ACR	ELFEXT	PS-ELFEXT	SRL
MHz	Db		dB	dB	dB	dB	dB	dB	dB
	avg	max	min	min	min	min	min	min	min
.772	1.6	1.8	77.0	75.2	75.0	73.2	-	-	-
1.0	1.8	2.0	75.3	73.3	73.3	71.3	70.0	68.0	20.0
4.0	3.5	3.8	66.3	62.5	64.3	60.5	58.0	56.0	23.6
8.0	5.0	5.3	61.8	56.5	59.8	54.5	51.9	49.9	25.4
10.0	5.6	5.9	60.3	54.4	58.3	52.4	50.0	48.0	26.0
16.0	7.1	7.5	57.2	49.7	55.2	47.7	45.9	43.9	26.0
20.0	7.9	8.4	55.8	47.4	53.8	45.4	44.0	42.0	26.0
25.0	8.9	9.4	54.3	44.9	52.3	42.9	42.0	40.0	25.5
31.25	10.0	10.6	52.9	42.3	50.9	40.3	40.1	38.1	25.0
62.5	14.4	15.3	48.4	33.1	46.4	31.1	34.1	32.1	23.5
100	18.5	19.7	45.3	25.6	43.3	23.6	30.0	28.0	22.5
155	23.5	25.0	42.4	17.4	40.4	15.4	26.2	24.2	21.6
200	27.2	28.8	40.8	12.0	38.8	10.0	24.0	22.0	21.0
250	30.7	32.6	39.3	6.7	37.3	4.7	22.0	20.0	20.5
300	34.0	36.2	38.1	2.0	36.1	0.0	20.5	18.5	20.1
350	37.2	39.5	37.1	-	35.1	-	19.1	17.1	19.8
400	40.2	42.7	36.3	-	34.3	-	-	-	19.5
500	45.8	48.6	34.8	-	32.8	-	-	-	19.0
550	48.4	51.5	34.2	-	32.2	-	-	-	18.8

D. Outside Plant Category 6 Cable shall be Mohawk/CDT Outdoor #M57622, or equal.

2.3 CATEGORY 6 PATCH PANELS:

A. Shall be rack mounted with 48 front accessible RJ45 jack ports.

B. Patch Panel shall be constructed using individual Jacks inserted into a pre-punched panel.

C. Jacks shall meet the requirements of proposed EIA/TIA Category 6 Standard dated 4-9-99 or later.

D. The Jack Termination of a 4 pair, 24 AWG, 100 Ohm, Solid Unshielded Twisted Pair cable shall be accomplished by use of a forward motion cap and shall not require the use of a Punch Down tool.

E. Shall use the **568-A** wiring scheme.

F. Shall have characteristics compatible with the Category 6 Patch Cords and Category 6 Cable (specified elsewhere) to ensure the specified Channel Link performance can be met.

G. Jack shall also have following additional characteristics (when measured according to proposed Addendum 5 to ANSI/TIA/EIA 568-A dated 8-25-98):

Typical Performance Results in db:

Performance test:	20 MHz	62.5 MHz	100 MHz	200 MHz
NEXT:	>65.0	>58.1	>54.0	>38.0
PS NEXT:	>64.0	>54.1	>50.0	>44.0
FEXT:	>57.1	>47.2	>43.1	>37.1
PS FEXT:	>54.1	>44.2	>40.1	>34.1
ATTENUATION:	<0.10	<0.16	<0.20	<0.28
RETURN LOSS:	>30.0	>26.0	>22.0	>16.0

H. Shall have rear mounted wire management bar to allow securing to provide strain relief and assist in maintaining proper bend radius.

I. Shall have space for specified jack/cable labeling scheme.

J. Panel height not to exceed 3.5 inches.

K. Bix type Patch Panels are not acceptable.

L. Patch Panel shall be Panduit #CPP48WBL with 48 Panduit #CJ688TPOR Jacks installed.

2.4 DATA JACKS

A. Data jacks shall meet the requirements of proposed EIA/TIA Category 6 Standard dated 4-9-99 or latest revision.

B. The Jack Termination of a 4-pair, 24 AWG, 100 Ohm, Solid Unshielded Twisted Pair cable shall be accomplished by use of a forward motion cap and shall not require the use of a Punch Down tool.

C. Shall use the 568-A wiring scheme.

D. Shall have characteristics compatible with the Category 6 Patch Panels (Section 16700-2.03), Category 6 Patch Cords (Section 16700-2.07), and Category 6 Cable (Section 16700-2.01 & 2.02) to ensure the specified Channel Link performance can be met.

E. Jack shall also have following additional characteristics (when measured according to proposed Addendum 5 to ANSI/TIA/EIA 568-A dated 8-25-98 or latest revision):

Typical Performance Results in db:

Performance test:	20 MHz	62.5 MHz	100 MHz	200 MHz
NEXT:	>65.0	>58.1	>54.0	>38.0
PS NEXT:	>64.0	>54.1	>50.0	>44.0
FEXT:	>57.1	>47.2	>43.1	>37.1
PS FEXT:	>54.1	>44.2	>40.1	>34.1
ATTENUATION:	<0.10	<0.16	<0.20	<0.28
RETURN LOSS:	>30.0	>26.0	>22.0	>16.0

G. Jacks for 5400 Wiremold Raceway shall be Panduit Keystone #KJ688TPOR.

H. Jacks shall be Panduit #CJ688TPOR.

2.5 DATA JACK PLATES/HOUSINGS/ENCLOSURES

A. Data Jack Plates and Housings shall be appropriate for jack type and the location where they are to be used.

B. Data Jack Plate and Housings shall be labeled using a numbering schedule specified by the District.

C. See Part 3, Execution, for additional information.

D. Data Jack Wall Plates shall be Panduit #ECPG with Panduit #CFG4 frame, and 3 Panduit #CHB2IW-X blank insert.

E. Data Jack Plates 5400 Wiremold Raceway shall be Wiremold #5507FRJ.

2.6 FIBER OPTIC CABLE:

A. Fiber Optic Cable shall:
1. Be a composite cable containing both multimode and single mode fibers.
2. Be rated for indoor/outdoor use in both vertical and horizontal applications.
3. Meet the requirements of NEC for OFNR cables.
4. Comply with Bellcore, FDDI, EIA/TIA-568, and Insulated Cable Engineers Association (ICEA) standards.

5. Be constructed using a water blocking technology to inhibit water from affecting the fibers.
6. Be reinforced with Aramid yarn and also meet the following additional criteria:
   a. Physical specifications:

Multi-mode:	Single-mode:
50.0 nanometer core	8.3 nanometer core
125 nanometer cladding	125 nanometer cladding
250 nanometer coating	250 nanometer coating
900 nanometer buffering	900 nanometer buffering
0.275 numeric aperture	0.13 numeric
aperture Graded Index	

7. Fiber Count:
   a. Multi-mode: 12 Fibers
   b. Single-mode: 12 Fibers

8. Maximum Tensile Load During Installation: 1600 N
9. Maximum Tensile Load Operating: 525 N
10. Cable minimum bending radius:
    a. During installation: 20 times the cable diameter
    b. After installation: 10 times the cable diameter

11. Buffered Fiber minimum bend radius: 0.75 inches
12. Operating temperature: -40 to +85 degrees C
13. Wavelength/attenuation:

	Multi-mode:		Single-mode:	
	850 nm	1300 nm	1300 nm	1550 nm
Attenuation	3.0 db/km	1.0 db/km	.5 db/km	.5 db/km
Bandwidth MHz/km Nominal	400 MHz/km	600		
Zero dispersion Slope	0.092 ps/(nm2-km)			

B. The following Documents of the latest issue form a part of this specification to the extent specified herein:

ANSI/TIA/EIA-STD-RS-455: Standard Test Procedures for Fiber Optic Fibers, Cables Transducers, Connecting and Terminating Devices.

ANSI/TIA/EIA-STD-RS-359: Standard Colors for Color Identification and Coding. ANSI/TIA/EIA-STD-598A: Optical Fiber Cable Color Coding.

MIL-STD-202: Test Methods for Electronic and Electrical Equipment.

MIL-HDBK-454: Standard General Requirements for Electronic Equipment.

MIL-STD-810: Environmental Test Methods and Engineering Guidelines.

UL Subject 1666: Standard Flame Test for Flame Propagation Height of Electrical and Optical Cable Installed Vertically

in Shafts.

NFPA 70-1999: National Electric Code Article 770, Optical Fiber Cable.

C. Fiber Optic Cable shall be Optical Cable Corporation Part #DC24-060D-4W3FB/1GC-4S.5MC/00.5MD/900-OFNR.

2.7 PATCH CORDS (MDF/IDF CABINETS):

A. Fiber Optic MDF/IDF Patch Cords:
1. Shall be factory constructed and have the same Optical Characteristics and Bandwidth as the Fiber Optic Cables specified in Section 2.06 Fiber Optic Cable.
2. Single-mode patch cord for Single-mode cable.
3. Mode-conditioning patch cord for Multi-mode cable.
4. Connector types to match installed equipment.
5. Length shall be no longer than necessary to connect the installed equipment.
6. Connectors shall be factory installed.
7. A “Duplexed” connector is required.

B. Category 6 MDF/IDF Patch Cords:
1. Shall be factory constructed using materials that are compatible with the proposed Category 6 Standard dated 4-9-98 or latest version.
2. Shall have characteristics that complement the specified Patch Panel Jacks (Section 16700-2.03) to ensure the specified Channel Link performance is met.
3. Length shall be no longer than necessary to accommodate the physical layout of the equipment to be connected.
4. Cords are to be bound together by Velcro bands. Wire ties are not acceptable.
5. Contractor to supply and install.
6. Patch Cords shall be Panduit #UTPCG series, or equal, Orange.

2.8 FIBER OPTIC PATCH PANELS:

A. Type-1 (for use in IDF Wiring Cabinets) shall be:
1. Capable of containing twenty-four (24) SC type duplex fiber optic adapters.
2. Equipped with six (6) SC type duplex fiber optic adapters.
3. Designed for 19" rack mounting.
4. Rear Tray with Slack Management Spools.
5. Equipped with integral cable strain relief bar.
6. Height: 1.75" max.

B. Type 1 Patch Panel shall be Panduit Patch Panel Frame #CPP24WBL with FMT1 Opticom Tray and # CMDBUSCZBU SC adapters installed.

C. Type-2 (for use in MDF Wiring Cabinets) shall be:
1. 19-inch rack mount type with a mechanism to permit entry for servicing regardless of other equipment mounted above or below.
2. Have front and rear access.
3. Be equipped with a clamp type mount to secure incoming cable.
4. Be equipped with SC type connectors meeting TIA/EIA specifications.
5. Contain internal spacers and guide rings to store and route the buffered fibers.

6. Be four rack units in height, 7 inches.
7. Have depth: 14 inches, maximum.
8. Have physical characteristics to accommodate the layout and labeling scheme shown in the drawings.
9. Be equipped with 72 SC connectors as shown in the plans.

D. Type-2 Fiber Optic Patch Panel shall be Avaya #LSTLS/MM/SC-072/7.

2.9 CATEGORY 6 STATION JUMPER CORDS:

A. One Category 6 Station Jumper Cords shall be provided for each Category 6 Jack installed.

B. This cable will be used to connect a computer to the jack.

C. Shall be factory constructed using materials that are compatible with the proposed Category 6 Standard dated 4-9-98 or latest version.

D. Shall have characteristics that complement the specified Data Jacks (Section 2.04 Data Jacks) to ensure the specified Channel Link performance is met.

E. Shall be length 14 feet.

F. Station cords shall be boxed and labeled for delivered to the Maintenance Department.

G. Each box of station cords shall be labeled with site/project name and number of total cables.

H. Patch Cables shall be Panduit #UTPCG series, or equal.

2.10 "J" HOOKS

A. Shall be Category 5 type, with an "S" hook attached to provide a "swivel" action, Caddy type or equal.

B. Bridal ("D") Rings and similar devices are not acceptable.

2.11 INNER DUCT

A. The inner duct shall be an extruded, corrugated wall, coilable tubing suitable for installation within an existing larger diameter conduit system and meet the following additional criteria:
   1. Manufactured of Polyethylene with a density of .944 gm/cc.
   2. One-inch diameter.
   3. Orange in color.
   4. Tensile strength: 500 pounds.
   5. Impact Resistance at 32 degrees F, 50 ft. pounds.

B. Couplings shall threaded metallic type.

C. Shall have factory-installed pull-rope.

2.12 WIRING CABINET TYPE 1

A. Suitable for mounting 19" rack mount type equipment.

B. Rack rails shall be adjustable, front to rear.

C. Wiring Cabinet shall have double swing design to allow rear access to the equipment.

D. Door shall be field changeable to permit left or right hand mounting to accommodate field conditions.

E. Wiring Cabinet shall have solid metal front door with keyed lock.

F. Type 1 Wiring Cabinet shall be equipped with forced air ventilation with finger guards (x2) for each side (vent fan).

G. A double duplex power outlet shall be installed in one corner of the wiring cabinet that is on the swing side of the door.

H. The double duplex power outlet shall be installed with an isolated 20-amp circuit.

I. Wiring Cabinet shall have appropriate mounting screws included for internal equipment rails (quantity not less than 30 pieces).

J. Type 1 Wiring Cabinet shall be equipped with rack-mount 20-amp, surge protected, standard plug, multi-outlet power strip (Section 16700-2.20).

K. Wiring Cabinet shall be properly grounded with suitable earth grounding.

L. Color: black.

M. Construction: Carbon steel, all welded construction.

N. Size: 24" high x 22" wide x 26" deep.

O. Wiring Cabinet Type 1 shall be Hoffman DataCom #EWMF242225 with A4AXFNPG fan, AGARD4 finger guards (x2) and A19P20A10 power strip.

2.13 WIRING CABINET TYPE 2:

A. Suitable for mounting 19" rack mount type equipment.

B. Rack rails shall be adjustable, front to rear.

C. Wiring Cabinet shall have double swing design to allow rear access to the equipment.

D. Door shall be field changeable to permit left or right hand mounting to accommodate field conditions.

E. Wiring Cabinet shall have solid metal front door with keyed lock.

F. Type 2 Wiring Cabinet shall be equipped with forced air ventilation with finger guards (x2) for each side (vent fan).

G. A double duplex power outlet shall be installed in one corner of the wiring cabinet that is on the swing side of the door.

H. The double duplex power outlet shall be installed with an isolated 20-amp circuit.

I. Wiring Cabinet shall have appropriate mounting screws included for internal equipment rails (quantity not less than 30 pieces).

J. Type 2 Wiring Cabinet shall be equipped with rack-mount 20-amp, surge protected, standard plug, multi-outlet power strip (Section 16700-2.20).

K. Wiring Cabinet shall be properly grounded with suitable earth grounding.

L. Color: black.

M. Construction: Carbon steel, all welded construction.

N. Size: 36" high x 22" wide x 25" deep.

O. Wiring Cabinet Type 2, shall be Hoffman DataCom #EWMF362225 with A4AXFNPG fan, AGARD4 finger guards (x2) and A19P20A10 power strip.

2.14 WIRING CABINET TYPE 3

A. Wiring Cabinets (WC) shall be modular construction, for standard EIA 19" equipment mounting.

B. External covers and doors to be fabricated of 14 gauge steel.

C. Door shall be solid metal and have flush mounted key locked handle and three point latch mechanism.

D. Cabinet shall be totally enclosed with a solid top and base assembly.

E. Seamless foam-in-place gaskets shall be used to provide a watertight and dust-tight seal against moisture and contaminants.

F. Door shall be field changeable to permit left or right hand mounting to accommodate field conditions.

G. When installed in environments that have sufficient room cooling units (air conditioning), cabinets shall have forced air ventilation (vent fan).

H. When installed in environments that do not have sufficient room cooling units (air

conditioning), cabinets shall have mounted air conditioning units installed.

I. A double duplex power outlet shall be installed in one corner of the wiring cabinet that is on the swing side of the door.

J. The double duplex power outlet shall be installed with an isolated 20-amp circuit.

K. Type 3 Wiring Cabinet shall be equipped with rack-mount 20-amp, surge protected, standard plug, multi-outlet power strip (Section 16700-2.20).

L. Shall be properly grounded with suitable earth grounding.

M. Wiring Cabinet shall have appropriate mounting screws included for internal equipment rails (quantity not less than 30 pieces).

N. Shall be equipped with an internal equipment-mounting frame designed to swing-out and allow access to rear of installed equipment.

O. Internal frame shall be adjustable, front to rear.

P. Internal frame shall be able to swing outward for easy access to rear of equipment.

Q. Shall accommodate equipment depth of 24" min.

R. A vertically mounted, 5-foot-long, 20 amp, surge protected, standard plug, multi-outlet power strip shall be installed on the swing out mounting frame.

S. Dimensions:

1. Height: 2200 mm
2. Depth: 600 mm
3. Width: 800 mm

T. Wiring Cabinet, Type 3, shall be Hoffman PRO-LINE Series, with required attachments.

2.15 OPEN FRAME EQUIPMENT RACKS

A. Open Frame Floor Mounted Equipment Racks:
1. Open frame racks are not allowed in areas where students or site personal have access.
2. Racks shall be open frame design for mounting 19" electronic equipment.
3. A vertical rack cabling section shall be installed between each adjacent rack.
4. Racks shall have a vertical cabling section installed on both sides.
5. Shall have horizontal cable management secured to top of rack and nearest wall.
6. Contractor shall verify dimensions of Equipment Room before ordering racks.
7. A vertically mounted, 5-foot-long, 20 amp, surge protected, standard plug, multi-outlet power strip shall be installed on each rack.
8. Shall be properly grounded with suitable earth grounding.
9. Vertical rack cabling sections shall be Chatsworth #11374-02.
10. Floor Mounted Racks for Equipment Rooms shall be Chatsworth Products

#55053-503, with Chatsworth Vertical Power Strip #12851-706, earth grounding kit (13622-010), cable ladder kit (11252-115) and cable management kit (40098-705).

B. Open Frame Wall Mounted Equipment Racks:
1. Open frame racks are not allowed in areas where students or site personal have access.
2. Racks shall be open frame design for mounting 19" electronic equipment.
3. Contractor shall verify dimensions of Equipment Room before ordering racks.
4. A rack-mount, 20 amp, surge protected, standard plug, multi-outlet power strip shall be installed on each rack.
5. Shall be properly grounded with suitable earth grounding.
6. Wall Mounted Racks for Equipment Rooms shall be Chatsworth Products #15323-524, with a Hoffman DataCom A19P20A10 power strip.

2.16 POWER STRIP

A. 19" rack mount.

B. 12 outlets, rear mounted.

C. 20 amp rated.

D. Surge protected.

E. Standard plug.

F. Power Strip shall be Hoffman #A-19P20A10 or equal:

2.17 FIBER OPTIC CONNECTORS

A. Connectors shall be attached to fiber strands using a “crimp-on” connector.

B. Connectors shall be SC type.

C. Connectors shall be Siecor #95-200-41 (single-mode) and 95-000-40 (multi- mode).

2.18 EXTERNAL ANTENNA/ROOF TOP CONDUIT:

A. External Antenna shall be (unless otherwise specified):
1. Wireless Ethernet 802.11b compliant.
2. Omni-Direction footprint.
3. Minimum of 10db gain.
4. Properly grounded as per all Federal, State, and Local laws and regulations.
5. Proper Lighting Arrestors shall be installed with all External Antenna installations.
6. Proper gauge Ground Wire shall be used for all Lighting Arrestor/External antenna installations.
7. See Section 16730 (Wireless LAN) for more details.
8. See Section 16450 (Grounding) for more details

B. Roof Top Conduit shall be (unless otherwise specified):
   1. Two 2" GRC pipes.
   2. Roof Top Conduit shall install into type 4 "Rain Tight" NEMA Junction Boxes for all transitions.
      a. Junction Boxes shall be sized per EIA/TIA standards to properly support bend radiuses of all cable/fiber installed within.
   3. Roof Top Conduit shall be properly grounded as per all Federal, State, and Local laws/regulations.
   4. See Section 16010 (Basic Electrical Requirements) for more details.
   5. See Section 16050 (Basic Electrical Materials) for more details.
   6. See Section 16450 (Grounding) for more details.

2.19 JUNCTION BOXES

A. Junction Boxes shall be defined as metal boxes that are at least than 12"L x12"W x 6"D.

B. In all instances the box shall be sized according to the needs of the installed cable, with bend radius of the cable a main consideration.

C. Junction boxes shall be installed as necessary to facilitate the pulling of wire and to comply with NEC requirements.

D. 12"L x 12"W x 6"D Junction Box as the minimum size and is not acceptable for use with conduit sizes greater than 1 ¼ inches.

E. Refer to National Electrical Code #370-28 for Junction Box requirements for 2 inch, and other size conduits.

F. Junction Box size and hole placement are defined in NEC #370-28.

G. An 18"H X 18"W X 8"D, NEMA 3, Junction Box should serve most locations, including those where a T.V. System Outdoor Directional coupler will be housed.

H. The bend radius of a "bundle" of Category 6 cables and RG-11 cables and in some instances .540-inch rigid coaxial cable shall be considered in selecting the box depth.

I. In no case shall the depth be less than 6 inches.

J. An 8 inch depth for "all" boxes is recommended.

K. In some locations, to accommodate special needs, a special box size may be required.

2.20 PULL BOXES

A. Precast concrete Pull Boxes shall be minimum inside dimension of: 16" wide by 29" long by 21" deep.

B. Each Pull Box shall be equipped with an "extension" to provide the required minimum depth of 21 inches.

C. Pull Boxes shall be H/20 rated for light vehicular traffic, regardless whether the area may see traffic or not.

D. Pull Box Extinctions shall be used as required by depth to level cover to finish grade.

E. Pull Box shall rest on a 6” bed of crushed gravel.

F. Pull Boxes shall have minimum 2” diameter drain hole.

G. Pull Box Covers shall be permanently engraved as “DATA”.

2.21 DUCT BANK/VAULTS

A. Duct Bank shall be defined as concrete encased conduit equal to or larger than 4” diameter.

B. Concrete encased Duct Bank shall have a minimum of two (2) 4” diameter conduits.

C. Grounding Conductor shall run through all concrete encased Duct Bank Systems.

D. Vaults shall be defined as pored cement boxes that equal to or larger than: 8’-6”L x 60”W x 48”D.

E. Precast concrete Vaults shall be minimum inside dimension of 60” wide by 8’-6” long by 48” deep.

F. Vaults shall have exposed grounding conductor.

G. Vaults shall have adjustable supports for Inner-Duct tubing.

H. Vaults shall have a minimum 6” diameter sump opening.

I. Vaults shall have a minimum 1” diameter grounding rod opening.

J. Vaults shall have galvanized pull irons in at least two locations.

K. Vault Covers shall be sectional steel reinforced for H-20 Traffic Bridge Loading.

L. Vault Covers shall be permanently engraved as “DATA”.

M. Vaults shall be placed on 6” compacted rock to insure uniform distribution of soil pressure on floor.

PART 3 - EXECUTION

3.1 TYPE 3 WIRING CABINETS

A. For MDF Use:
1. Type 3 Wiring Cabinet will function as the MDF (Main Distribution Frame).
2. MDF Wiring Cabinet will serve as the connection point for IDF Wiring Cabinets.
3. To permit connection of the system installed to the District's Wide Area Network (WAN), a duplex jack shall be provided at the WAN location and connected to the MDF Wiring Cabinet utilizing Category 6 on specified patch panel.
4. Dependent on site conditions, MDF Wiring Cabinet shall have HVAC or forced air vented system installed.
5. A double duplex power outlet shall be installed in one corner of the wiring cabinet that is on the swing side of the door.
6. The double duplex power outlet shall be installed with an isolated 20 amp circuit.
7. Wiring Cabinet shall have rack mounted power strips installed.
8. MDF Wiring Cabinets shall be earth grounded.
9. All Category 6/Fiber Optic cable dressing shall be done with Velcro strips.
10. Tie wraps are not allowed when dressing Category 6/Fiber Optic cable.
11. All patch cable dressing shall be done with Velcro strips.
12. Tie wraps are not allowed when dressing patch cables.
13. The District prefers that the MDF Wiring Cabinet be installed in the Administrative Area.
14. If no space is available in this area, then the cabinet shall be located in a suitable area near the Administration Area.
15. Administrative area or other suitable area shall have adequate space and environmental controls (HVAC cooling units).
16. Area selected shall be secure with a lockable passageway.
17. Arrangement of equipment in MDF is shown in Drawing E1.03.

B. For IDF Use:
1. The District prefers that the Type 3 Wiring Cabinet be installed for use as an IDF cabinet.
2. Type 3 Wiring Cabinets may be used in areas that have adequate space and environmental controls (HVAC cooling units).
3. Area selected shall be secure with a lockable passageway.
4. Dependent on site conditions, IDF Wiring Cabinet shall have HVAC or forced air vented system installed.
5. A double duplex power outlet shall be installed in one corner of the wiring cabinet that is on the swing side of the door.
6. The double duplex power outlet shall be installed with an isolated 20 amp circuit.
7. IDF Wiring Cabinets shall be equipped with rack-mount 20 amp, surge protected, standard plug, multi-outlet power strip (Section 16700-2.20).
8. IDF Wiring Cabinets shall be earth grounded.
9. All Category 6/Fiber Optic cable dressing shall be done with Velcro strips.
10. Tie wraps are not allowed when dressing Category 6/Fiber Optic cable.
11. All patch cable dressing shall be done with Velcro strips.
12. Tie wraps are not allowed when dressing patch cables.
13. The IDF cabinets will contain the Switches and Patch Panels, which connect to Jacks in various locations.

14. The IDF shall be located within 90 meters of all Jacks served by the IDF.
15. All IDF locations shall be at least 100 meters from MDF location.
16. All IDF areas shall be connected to MDF by fiber cables as specified in Section 16700.
17. IDF and MDF locations are not to be combined.
18. Arrangement of equipment in the IDF is shown in Drawing E1.03.

3.2 TYPE 2 WIRING CABINETS

A. For MDF Use:
1. The District prefers that the Type 3 Wiring Cabinet be installed for use as an MDF cabinet.
2. Type 2 Wiring Cabinets may be used for MDF locations only where Type 3 Wiring Cabinets are found to be inappropriate for reasons of space.
3. MDF Wiring Cabinet will serve as the connection point for IDF Wiring Cabinets.
4. To permit connection of the system installed to the District's Wide Area Network (WAN) a duplex jack shall be provided at the WAN location and connected to the MDF Wiring Cabinet utilizing Category 6 on specified patch panel.
5. MDF Wiring Cabinet shall have forced air vented system (fans) installed.
6. A double duplex power outlet shall be installed in one corner of the wiring cabinet that is on the swing side of the door.
7. The double duplex power outlet shall be installed with an isolated 20 amp circuit.
8. MDF Wiring Cabinet shall be equipped with rack-mount 20 amp, surge protected, standard plug, multi-outlet power strip (Section 16700-2.20).
9. MDF Wiring Cabinets shall be earth grounded.
10. All Category 6/Fiber Optic cable dressing shall be done with Velcro strips.
11. Tie wraps are not allowed when dressing Category 6/Fiber Optic cable.
12. All patch cable dressing shall be done with Velcro strips.
13. Tie wraps are not allowed when dressing patch cables.
14. The District prefers that the MDF Wiring Cabinet be installed in the Administrative Area.
15. If no space is available in this area, then the cabinet shall be located in a suitable area near the Administration Area.
16. Administrative area or other suitable area shall have adequate space and environmental controls (HVAC cooling units).
17. Area selected shall be secure with a lockable passageway.
18. Arrangement of equipment in MDF is shown in Drawing E1.03.

B. For IDF Use:
1. The District prefers that the Type 3 Wiring Cabinet be installed for use as an IDF cabinet.
2. Type 2 Wiring Cabinets may where space concerns do not allow Type 3 Wiring Cabinets.
3. Type 2 Wiring Cabinets must be installed in areas that have adequate space and environmental controls (HVAC cooling units).
4. Area selected shall be secure with a lockable passageway.
5. IDF Wiring Cabinets shall have forced air vented system (fans) installed.
6. A double duplex power outlet shall be installed in one corner of the wiring cabinet that is on the swing side of the door.
7. The double duplex power outlet shall be installed with an isolated 20 amp circuit.

8. IDF Wiring Cabinet shall be equipped with rack-mount 20 amp, surge protected, standard plug, multi-outlet power strip (Section 16700-2.20).
9. IDF Wiring Cabinets shall be earth grounded.
10. All Category 6, Fiber Optic, and Patch Cable dressing shall be done with Velcro strips.
11. Tie wraps are not allowed when dressing cables.
12. The IDF cabinets will contain the Switches and Patch Panels, which connect to Jacks in various locations.
13. The IDF shall be located within 90 meters of all Jacks served by the IDF.
14. All IDF locations shall be at least 100 meters from MDF location.
15. All IDF areas shall be connected to MDF by fiber cables as specified in Section 16700-2.20.
16. IDF and MDF locations are not to be combined.
17. Arrangement of equipment in the IDF is shown in Drawing E1.03.

3.3 EQUIPMENT RACKS

A. For MDF Use:
1. Equipment Racks are allowed for MDF use ONLY when Wiring Cabinets Type 2 and Type 3 are not suitable for environmental reasons.
2. Equipment Racks are only allowed in areas that are securable.
3. Equipment Racks are NOT allowed in areas where personal or students have access.
4. MDF Equipment Rack will serve as the connection point for IDF Wiring Cabinets.
5. To permit connection of the system installed to the District's Wide Area Network (WAN) a duplex jack shall be provided at the WAN location and connected to the MDF Equipment Rack utilizing Category 6 on specified patch panel.
6. MDF Equipment Rack shall have rack mounted power strips installed.
7. MDF Equipment Rack shall be earth grounded.
8. All Category 6/Fiber Optic cable dressing shall be done with Velcro strips.
9. Tie wraps are not allowed when dressing Category 6/Fiber Optic cable.
10. All patch cable dressing shall be done with Velcro strips.
11. Tie wraps are not allowed when dressing patch cables.
12. The District prefers that the MDF Equipment Rack be installed in the Administrative Area.
13. If no space is available in this area, then the Equipment Rack shall be located in a suitable area near the Administration Area.
14. Administrative area or other suitable area shall have adequate space and environmental controls (HVAC cooling units).
15. Area selected shall be secure with a lockable passageway.
16. Arrangement of equipment in MDF is shown in Drawing E1.03.

B. For IDF Use:
1. Equipment Racks are allowed for IDF use ONLY when Wiring Cabinets Type 2 and Type 3 are not suitable for environmental reasons.
2. Equipment Racks are ONLY allowed in areas that are securable.
3. Equipment Racks are NOT allowed in areas where personal or students have access.
4. Equipment Racks must be installed in areas that have adequate space and environmental controls (H.V.A.C. cooling units).

5. Area selected shall be secure with a lockable passageway.
6. IDF Equipment Racks shall have rack mounted power strips installed.
7. IDF Equipment Racks shall be earth grounded.
8. All Category 6/Fiber Optic cable dressing shall be done with Velcro strips.
9. Tie wraps are not allowed when dressing Category 6/Fiber Optic cable.
10. All patch cable dressing shall be done with Velcro strips.
11. Tie wraps are not allowed when dressing patch cabling.
12. The IDF Equipment Racks will contain the Switches and Patch Panels, which connect to Jacks in various locations.
13. The IDF shall be located within 90 meters of all Jacks served by the IDF.
14. All IDF locations shall be at least 100 meters from MDF location.
15. All IDF areas shall be connected to MDF by fiber cables as specified in Section 16700.
16. IDF and MDF locations are not to be combined.
17. Arrangement of equipment in the IDF is shown in Drawing E1.03.

3.4 CATEGORY 6 CABLE

A. All Category 6 cable installation shall be in accordance with manufacturer's recommendations. Recommendations of the referenced TIA/EIA standard, and the following:
1. All cable shall be hand pulled and formed.
2. Provide rigging to allow cable to feed from spools without twists.
3. Pulling tension shall not exceed 25 pounds.
4. Cable runs shall be installed in continuous lengths, without splice.
5. Minimum cable bending radius shall not be less than four times the cable diameter or less than the manufacturer's recommendation, both during cable pulling and in the final installation.
6. Individual and group cable runs in accessible ceiling spaces shall be open cable runs supported by "J Hooks" attached to the building structure.
7. Cable support spacing shall not be greater than 5 feet.
8. Cables shall not be pulled tight, but shall exhibit "a noticeable" sag.
9. Cable routing shall be positioned to minimize obstruction to others using or accessing the Space and to minimize the potential for damage from other building construction or maintenance operations.
10. Where possible, cables shall be routed by grouping into a bundle and branching to the final locations with right angle bends.
11. Cables crossing pipes, ducts, etc., where possible, shall be run above such obstructions.
12. Bundled cables shall be tie wrapped to prevent undue sagging between cable support devices.
13. Tie wraps shall be manually tightened, without tools, to avoid deforming the cable.
14. Cables shall not rest upon "T" bar ceiling or be supported from existing ceiling, fixtures, or air terminal support wires.
15. Provide a 6 to 10 inch length of cable at each jack location to accommodate future servicing of the jack.
16. All cable in exposed areas shall be installed in raceway systems per Specification Section 16010, or as shown on drawings.
17. Cable routed via concealed, non-accessible spaces shall be installed in raceway

per Specification Section 16010, or as shown on the drawings.

18. Maintain cable spacing from sources of electromagnetic interference in accordance with TIA/EIA-569.
19. Observe manufacturer's recommendations for cable stripping and maintenance of pair twists at terminations.
20. Maintain cable jacket to within .5 inch of the point of termination.
21. Cables in Classroom, Offices, etc., shall be installed within wall spaces where possible.
22. Drill through blocking if necessary, and fill with appropriate fire stop.
23. Cables shall not be pulled through "J-Hooks", but shall be pulled using low friction devices such as pulleys or other equipment, then laid into the "J-Hooks."

3.5 PATCH PANELS, CATEGORY 6

A. All Category 6 Patch Panels shall be installed as follows:
1. Install patch panels at locations in Wiring Cabinets as indicated.
2. Cables shall be secured with tie wraps at patch panel cable management support bar to stabilize cable and ensure proper maintenance of bend radius.
3. Provide engraved identification plate to identify each patch panel. Example: PATCH PANEL "A ", PATCH PANEL "B", etc.
4. Each patch panel port shall be labeled with the jack number and room number that it serves.
5. The label on the attached port cable shall provide the information for the port label.
   a. Port label shall consist of the first six digits of the Cable Label.
   b. A two-line label is required, with the jack number appearing above the room number.
   c. The lettering color shall contrast with the label background color.
   d. The label shall be machine printed on a "self-laminating", adhesive material.
   e. The label shall be applied in the space provided on the patch panel and then covered with a clear plastic strip.
6. Contractor shall demonstrate a clear understanding of the labeling concept before proceeding with label application.
7. Contractor shall submit a sample of the proposed label for written approval by the District.
8. Install an Ortronics #40600369 strain relief bar at each patch panel location.

3.6 INNER DUCT

A. Inner duct for fiber optic cable shall be installed in a continuous run between point of origin and destination.

B. Approved couplings may be used in pull boxes.

C. Shall be used in all underground conduits sized 4 inches or larger shall be used for all open air Fiber Optic Cable runs.

D. Shall be secured at origin and terminal points and points in between to prevent movement.

E. Inner duct placement in underground conduits shall be grouped for maximum conduit fill leaving as many conduits as possible empty for future use.

F. All unused Inner duct shall have appropriate water tight plug material to seal duct.

G. Inner duct shall be trained and routed around the perimeter of pull boxes leaving maximum space for future cabling.

H. Label each Inner duct at point of origin point of termination, and at all points where it passes through a pull box.

I. Numbering scheme shall be “A”, “B”, “C”, etc.

3.7 FIBER OPTIC CABLE INSTALLATION

A. Fiber optic cable shall be installed only after complete raceway system and inner duct has been installed.

B. Pulling of fiber optic cable shall be done only in the presence of the District Inspector or Project Manager.

C. Any observed bending of any fiber optic cable during the installation process which exceeds the manufacturer’s recommended bending radius shall be cause for complete replacement of that cable at the Contractor’s expense.

D. Such bending can cause micro-cracks, which are undetectable with normal testing and which can cause performance problems in later years.

E. Fiber optic cable runs shall be installed in a continuous length; no splice allowed.

F. Provide necessary rigging to allow cable to feed from reels without twisting and provide a smooth bending transition of cable outside the raceway.

G. Pulling tension shall be monitored and not exceed the manufacturer’s recommendations.

H. Use a calibrated breakaway swivel pulling connector to prevent over stressing the cable when pulling.

I. Use a split mesh cable grip for attachment of pulling ropes or cables.

J. Minimum cable bending radius shall not be less than 20 times the cable diameter during pulling installation and not less than 10 times the cable diameter after installation.

K. All fiber optic cabling installed underground and within buildings shall be installed in an approved raceway.

L. Except in accessible attic spaces, fiber optic cable may be run “open” in “J Hooks” or other approved support system.

M. All fiber optic cabling installed in accessible attic spaces shall be installed in Inner-Duct.

N. Provide a 36-inch length of buffered fiber at each fiber patch panel or storage tray.

O. Individual buffered fibers shall be grouped in pairs and labeled.

P. The fiber pair shall be considered as a single port cable (much the same as a 4-pair, Category 6 cable which is considered a single port cable).

Q. SC connectors shall be installed on the fiber pair.

R. A separate duplexing clip shall be applied to join the SC connectors as a duplexed pair.

S. SC connector shall be attached to the fiber using Crimp type connectors.

T. Each strand of fiber within the cable shall be tagged and tested, with the District appointed Observer present, using an Optical Time Domain Reflectometer (OTDR).

U. Submit test results to District appointed Observer for review and approval before installation.

V. Any cable not meeting manufacturer's specifications shall not be installed.

W. Following installation and termination of the cable, conduct the following tests, using an approved Optical Power Meter:
   1. Measure end-to-end attenuation at 850 and 1300 nm for Multimode fiber and at 1300 and 1550 nm for Single-mode fiber.
   2. Measurement must be made from each end of the cable.
   3. Any cable or termination, which shows signs of deterioration or failure to meet manufacturer's specification, shall be replaced.
   4. Measurements shall be made in the presence of a District appointed Observer.

3.8 LABELING AND IDENTIFICATION

A. Category 6 Jacks:
   1. Category 6 Jack Numbers shall be developed by the Contractor using the following information and have the generalized format shown below:
      a. DVV-WWWW-XX-YZZ
      b. Where:

DVV =	Jack number (starting with the letter "D") unique to the room in which it is located (e.g., D01, D02, D99, etc.).
WWWW =	Room number where Jack is located (e.g., 0001, B024, 124C, LIBR, ADMN, CAFF, POD3, etc.).
XX =	Number of Wiring Cabinet, WC, serving the Jack. (e.g., 01, 03, 09, etc.).
Y =	Cat. 6, Patch Panel designator (e.g., A, B, C, etc.).
ZZ =	Port number on Cat. 6, Patch Panel (e.g., 01, 15, 48, etc.).

   2. For example, Jack # X01-013B-02-A37 indicates: Jack X01, in Room 013B,

served by Wiring Cabinet (WC) 02, from Patch Panel A, Port 37.

3. Contractor shall submit a sample of the proposed Category 6 Jacks Label for written approval before installation.

C. Category 6 Patch Panels:

1. Category 6 Patch Panels shall be developed by the Contractor using the following information and have the generalized format shown below:
   a. D
      V
      V
      W
      W
      W
      W
   b. Where:
      DVV = Jack number (starting with the letter "D") unique to the room in which it is located (e.g., D01, D02, D99, etc.).
      WWWW = Room number where Jack is located (e.g., 0001, B024, 124C, LIBR, ADMN, CAFF, POD3, etc.).
2. Refer to diagram E1.05/2 for labeling example.
3. Category 6 Patch Panel Labels shall be machine printed, using a laser printer, on appropriately size vinyl or other approved material.
4. Lettering shall be black and printed on a white frosted surface and covered by a minimum of two wraps of clear protective material.
5. A one-piece label is required.
6. Category 6 Patch Panel Labels shall be computer generated using appropriate software.
7. Contractor shall submit a sample of the proposed Category 6 Patch Panel Labels for written approval before installation.

D. Category 6 Cable:

1. Category 6 Cable Label shall contain the same information as the Jack Label.
2. Category 6 Cable Label information will be developed by the Contractor using rules shown in Section 16700-3.08, A, 1-3.
3. Category 6 Cable Label information shall appear two times on the label to facilitate ease of reading.
4. All Category 6 Cable Labels shall have the same orientation.
5. Category 6 Cable Label shall be machine printed, using a laser printer, on appropriately size vinyl or other approved material.
6. Lettering shall be black and printed on a white frosted surface and covered by a minimum of two wraps of clear protective material.
7. A one-piece label is required.
8. Category 6 Cable Labels shall be placed on each end of the cable, approximately four inches back from the point of termination.
9. Category 6 Cable Labels shall be computer generated using appropriate software.
10. Contractor shall submit a sample of the proposed Category 6 Cable Labels for written approval before installation.

E. Fiber Optic Patch Panel:
   1. The Fiber Optic Patch Panel label at Wiring Cabinet WC00 shall be labeled using the following generalized format:
      a. WCXX-FXX-WC00-FXYY
      b. Where:

WCXX =	Destination Wiring Cabinet number (e.g., WC05).
FXX =	Destination F.O. Patch Panel port number (e.g., F03 = port 03 of fiber patch panel).
WC00 =	Source location of F.O. Cable.
FXYY =	Source F.O. Patch Panel number and port. (e.g., F124 = port 24 of fiber patch panel 1).

F. Refer to diagram E1.05/1 for labeling example.

G. Fiber Optic Patch Panel Labels shall be machine printed, using a laser printer, on appropriately size vinyl or other approved material.
   1. Lettering shall be black and printed on a white frosted surface and covered by a minimum of two wraps of clear protective material.
   2. A one-piece label is required.
   3. Fiber Optic Patch Panel Labels shall be computer generated using appropriate software.
   4. Contractor shall submit a sample of the proposed Fiber Optic Patch Panel Label for written approval before installation.

H. Fiber Optic Cable:
   1. Buffered fibers shall be grouped into pairs and labeled.
   2. The fiber pair shall be considered as a single port cable (much the same as a 4- pair Category 6 cable is considered a single port cable.).
   3. The Fiber Optic Patch Panel labels at Wiring Cabinet WC00 will provide the information for the fiber pair labeling.
   4. Fiber Optic Cable Labels shall have the following generalized format:
      a. WCXX-FXX-WC00-FXYY
      b. Where:

WCXX =	Destination Wiring Cabinet number (e.g., WC05).
FXX =	Destination Fiber Optic Patch Panel port number (e.g., F03 = port 03 of patch panel).
WC00 =	Source location of Fiber Optic Cable.
FXYY =	Source Fiber Optic Patch Panel number and port. (e.g., F124 = port 24 of fiber patch panel 1).

   5. Fiber Optic Cable Label information shall appear two times on the label to facilitate ease of reading.
   6. All Fiber Optic Cable Labels shall have the same orientation.
   7. Fiber Optic Cable Labels shall be machine printed, using a laser printer, on appropriately sized Mylar, vinyl or other approved material.
   8. Lettering shall be black and printed on a white frosted surface and covered by a minimum of two wraps of clear protective material.
   9. A one-piece label is required.
   10. Fiber Optic Cable Labels shall be placed on each end of the cable, approximately four inches back from the point of termination.
   11. Fiber Optic Cable Labels shall be computer generated using appropriate

software.

12. Contractor shall submit a sample of the proposed Fiber Optic Cable Labels for written approval before installation.

I. Wire Cabinet Labeling:

1. Each wire cabinet shall be labeled with unique numbered engraved tags.
2. Contractor is to follow existing labeling scheme for the site.
3. Contractor is to determine what IDF numbers are in current use.
4. The next unused IDF number shall be used for each new IDF installed.
5. Format: IDF #"x" (where "x" is the unique number for that IDF).

G. Data Jack, Plates/Housings/Enclosures:

1. Each Category 6 Jack shall be labeled using information obtained per Section 16700-3.08, A, 1-3.
2. Jack Plate or other jack mounting assembly shall be engraved with the jack numbering information.
3. The engraving shall be filled with a permanent contrasting fill material.
4. "Stick-on" type labels are not acceptable.
5. Contractor shall submit a sample of each type of jack plate or assembly for approval before installation.

3.9 TYPE 1 WIRING CABINET:

A. For Main Video Distribution Head End Cabinet Use:

1. Type 1 Wiring Cabinets shall be installed for use as a Main Video Distribution Head End Cabinet.
2. Main Video Distribution Head End Cabinet will serve as the connection point for video signals feed to individual Sub Video Distribution Cabinets.
3. Main Video Distribution Head End Cabinet shall have forced air vented system (fans) installed.
4. A double duplex power outlet shall be installed in one corner of the wiring cabinet that is on the swing side of the door.
5. The double duplex power outlet shall be installed with an isolated 20 amp circuit.
6. Main Video Distribution Head End Cabinet shall have rack mounted power strips installed.
7. Main Video Distribution Head End Cabinet shall be earth grounded.
8. The District prefers that the Main Video Distribution Head End Cabinet be installed in a central area.
9. If no space is available in this area, then the cabinet shall be located in a suitable area near the central of the site.
10. Arrangement of equipment in Main Video Distribution Head End Cabinet is shown in Drawing E1.03.
11. Refer to Section 16781 Video Distribution System for more information.

B. For Sub Video Distribution Cabinet Use:

1. Type 1 Wiring Cabinets shall be installed for use as a Sub Video Distribution Cabinets.
2. Sub Video Distribution Cabinet will serve as the connection point for video signals feed to individual areas.
3. Sub Video Distribution Cabinets shall have forced air vented system (fans)

installed.
4. A double duplex power outlet shall be installed in one corner of the wiring cabinet that is on the swing side of the door.
5. The double duplex power outlet shall be installed with an isolated 20 amp circuit.
6. Sub Video Distribution Cabinets shall have rack mounted power strips installed.
7. Sub Video Distribution Cabinets shall be earth grounded.
8. Arrangement of equipment in Sub Video Distribution Cabinet is shown in Drawing E1.03.
9. Refer to Section 16781 Video Distribution System for more information.

3.10 PLACEMENT AND ADJUSTMENTS OF JACK LOCATIONS

A. Contractor shall locate jacks as near as possible to locations shown.

B. Where jack locations are obstructed by existing construction or Architectural features or to accommodate minor furniture re-arrangement, revise jack locations as directed by the Owner.

C. Any jack location revisions as directed by the Owner shall be accomplished at no change in Contract cost if re-location is within 20 feet and remains within the room shown on the plans.

3.11 PLACEMENT OF WIRING CABINET (MDF/IDF)

A. Placement of Wiring Cabinets shall be approved by the Owner.

B. Contractor shall remove or modify any items, such as shelves or cabinets, which may prevent the installation of the Wiring Cabinet.

C. Environmental conditions must be considered when placement of MDF/IDF Wire Cabinets are decided.

D. Room ventilation/cooling must be adequacy for equipment install inside MDF/IDF cabinets.

E. If necessary, cooling units must be installed to proved sufficient operational temperature ranges.

3.12 PERMANENT BUILDING AND PORTABLE CLASSROOM INSTALLATION DETAILS

A. Permanent building IDFs shall have at least two 2” GRC pipe ran from IDF to MDF.

B. Each portable is to have a type 4 NEMA junction box properly sized for this application with at least one 2” GRC pipe ran to a free standing pedestal.

C. Each site IDF shall have a dedicated run to the MDF.

D. “Daisy-chaining” or “Looping-thru” IDFs or a building is not allowed.

E. Permanent buildings and portables are not to be connected “daisy-chain” style.

F. EIA/TIA standards for conduit fill capacity shall be used. No more than 40% of pipe space shall be used.

G. All conduits installed underground shall be entirely encased in concrete 4 inches thick on all sides, with multiple conduits spaced not less than 2 inches apart, unless other- wise specified.

H. Provide approved conduit spacers as required to prevent any deflection of the conduits when concrete is poured and to preserve the position and alignment of the conduits in the concrete.

I. Conduits shall be tied to spacers.

J. Anchors shall be installed to prevent floating of the conduits during pouring of concrete.

K. All underground conduits shall be buried to a depth of not less than 24 inches below finished grade or top of the concrete envelope, unless otherwise specified.

L. Assemble the sections of conduits with approved fittings and stagger all joints. Cut ends of conduit shall be reamed to remove all rough edges.

M. The joints in all conduits shall be made liquid tight.

N. All bends and risers shall be completely below the surface where possible.

O. Two or more conduits runs in a common trench shall be separated by at least 2 inches of concrete.

P. Electric conduit runs, 600 volts or less, installed in a common trench with low voltage signal or data runs shall be separated from such by 12 inches.

Q. The Districts Inspector shall be called to the site for approval of all underground installations before and during concrete pour.

R. Where considered necessary by the Districts Inspector, a mandrel shall be drawn through each run of conduit in the presence of the Inspector, before and after pouring of concrete.

S. Non-metallic conduit installations shall comply with the following requirements:
   1. All joints in PVC conduit shall be sealed by means of approved solvent-weld cement supplied by the conduit manufacturer.
   2. All non-metallic conduit bends and deflections shall comply with the requirements of the applicable Electrical Code, except that the minimum radius of any bend or

      offset for any conduit sized from ½ to 1 ½ inches, inclusive, shall be not less than 24 inches.
   3. All bends at risers shall be not less than 24 inches.
   4. For conduits 2 inches and larger the radius of any bend or offset shall be not less than 36 inches, bends at riser may be 24 inches minimum.
   5. All bends at riser for both metallic and non-metallic conduit runs shall be rigid

steel conduit and comply with the requirements specified herein for underground rigid steel conduit installations.

T. A Pull Box shall be placed in a conduit run where:
1. The length is over 30 m (100 ft.).
2. There are more than two 90-degree bends or equivalent.
3. If there is a reverse (U shaped bend) in the run.

U. Rigid steel conduit installations shall comply with the following additional requirements:
1. Conduit threads shall be filled with approved pipe joint compound before screwing into couplings.
2. Bends and offsets shall be as specified for non-metallic conduit.
3. Rigid conduit underground to be double wrapped with 10 mil tape.

I. Pull Boxes shall be placed in a straight section of conduit and not used in lieu of a bend.

W. The corresponding conduits ends should be aligned with each other

X. Provide all excavation, trenching, bedding, backfill, and restoration necessary for the installation of underground conduit systems

Y. All work shall comply with the rules and regulations of the Division of Industrial Safety and all other local and state and federal agencies having jurisdiction.

Z. Do not backfill work until it has been inspected, tested, and approved by the Districts Inspector or Project Manager.

AA. Nothing herein shall be construed as permitting work that is contrary to such rules, regulations, or codes.

BB. Do not backfill work until it has been inspected, tested, and approved by the Districts Inspector or Project Manager. See Section 02222 (Excavating, Backfilling, Compaction) for complete trench work details.

CC. Unistrut, used to support riser conduits, shall be attached to building/structure using appropriate screws/bolts and anchors.

EE. When attaching to a wood surface, 5/8 inch or greater in thickness, use a #10 or #12 plated screw and washer.

FF. When attaching to a plaster surface with wood sub-surface, 5/8 inch or greater in thickness, use method described in H. above.

GG. When attaching to a plaster surface without a wood sub-surface, or other suitable sub- surface, the Unistrut shall span two studs and be attached using #10 or #12 plated screws and washers.

HH. Gypsum Board, or similar, is not a suitable sub-surface.

II. When attaching to Cinder Block\Blocklite surfaces use anchors appropriate for that

material. Use #10 or #12 plated screws and washer.

JJ. Cutting and Patching:
1. The contractor shall do all cutting necessary for proper installation of this work and shall repair any damage done by himself or his workmen.
2. All patching shall be of the same materials, workmanship and finish as existing and shall accurately match all surrounding work.
3. If identical materials are not available or cannot be used where exposed surfaces are involved, use materials that match existing adjacent surfaces to the fullest extent possible with regard to visual effect.
4. Use materials whose installed performance will equal or surpass that of existing materials.
5. All work shall be done by workers skilled in the required trade.

KK. It is the intention of Fresno Unified to have all wires concealed inside walls.

LL. Fishing of all walls is required unless field conditions dictate otherwise and is approved by FUSD Project Manager or their representative.

MM. Surface Mount Molding is to be used only as a last resort, and only when no other method is available to secure cables.

NN. When Surface Mount Molding is used it shall be installed in a professional manner. OO.

Surface Mount Molding must blend into the environment it is install within.

PP. Surface Mount Molding deemed unacceptable shall be immediately removed or replaced without cost to FUSD.

QQ. Environmental conditions must be considered when placements of MDF/IDF cabinets are decided.

RR. Room ventilation/cooling must be adequacy for equipment install inside MDF/IDF cabinets.

SS. If necessary, cooling units must be installed to proved sufficient operational temperature ranges.

TT. Refer to the following details for Permanent Building/Portable Classroom Installation examples:
1. E2-10: “Conduit Through Masonry or Concrete Wall”.
2. E2-15: “Typical Fiber Optic Cable Entrance Detail”.
3. E2-19: “Service Entry at Building”.
4. E2-21: “Preferred Data and Cable/Outlet Detail”.
5. E2-22: “Typical Data and Cable/Outlet Detail”
6. E2-23: “Alternative 5 Data and Cable/Outlet Detail”
7. E2-24: “Service Entry”.
8. E2-25: “Conduit Through Masonry or Concrete Wall”.
9. E2-27: “Service Entry”.
10. E2-28: “Elevation at Core-Drilled Holes Through Existing Footing”.

11. E2-29: “New Concrete Slab Detail”.
12. E2-30: “Service Entry”.
13. E2-31: “Service Entry”.
14. E2-32: “Service Entry”.
15. E2-33: “Typical Slab Cutting Joint”.
16. E2-51: “Penetration Fire-stop for Insulated Cables Through a Concrete Wall w/Steel Sleeve Option”.
17. E2-52: “Penetration Fire-stop Detail for 2” Max Dia. Plastic Pipe/Conduit Through a Concrete Floor”.
18. E2-53: “Penetration Fire-stop Detail for Multiple Steel Pipe/Conduit Through a Concrete Floor”.
19. E2-54: “Penetration Fire-stop Detail for 6” Maximum Diameter PVC Plastic Pipe/Conduit Through a Concrete Floor”.
20. E2-55: “Penetration Fire-stop Detail for 1” Maximum Diameter Entrance Tubing Through a Concrete Floor”.
21. E2-56: “Penetration Fire-stop for Single Fiber Optic Cable PVC Inner Duct Through a Concrete Floor”.
22. E2-57: “Penetration Fire-stop for Multiple Fiber Optic Cable/PVC Inner Duct Through a Concrete Floor”.
23. E2-58: “Penetration Fire-stop Detail for 4” Maximum Diameter ABS. And PVC Plastic Pipe Through a one-hour Gypsum Wall Board Assembly”.
24. E2-59: “Penetration Fire-stop Detail for 2” Maximum Diameter PB, PP, And PVC Plastic Pipe/Conduit Through a one-hour Gypsum Wall Board Assembly”.
25. E2-60: “Penetration Fire-stop Detail for 2” Maximum Diameter Pipe/Conduit Through a Fire-Rated Gypsum Wall Board Assembly”.
26. E2-63: “Penetration Fire-stop Detail for 1” Maximum Diameter PVC Plastic Pipe/Conduit Through a Concrete or Masonry Wall”.
27. E2-64: “Penetration Fire-stop Detail for 1” Maximum Diameter Entrance Tubing Through a Concrete or Masonry Wall”.
28. E2-65: “Penetration Fire-stop Detail for 4” Maximum Diameter ABS., CPVC, and PVC Plastic Pipe Through a Concrete or Masonry Wall”.
29. E2-66: “Penetration Fire-stop Detail for Various Plastic Pipe Types Through a Concrete or Masonry Wall”.
30. E2-67: “Penetration Fire-stop Detail for 4” Maximum Diameter PVC Plastic Pipe/Conduit Through a Concrete Wall”.
31. E2-68: “Penetration Fire-stop Detail for Insulated Cables Through a Concrete or Masonry Wall w/Steel Sleeve Optional”.
32. E2-69: “Penetration Fire-stop Detail for Multiple Metal Pipe Through a Fire-Rated Concrete or Masonry Wall”.

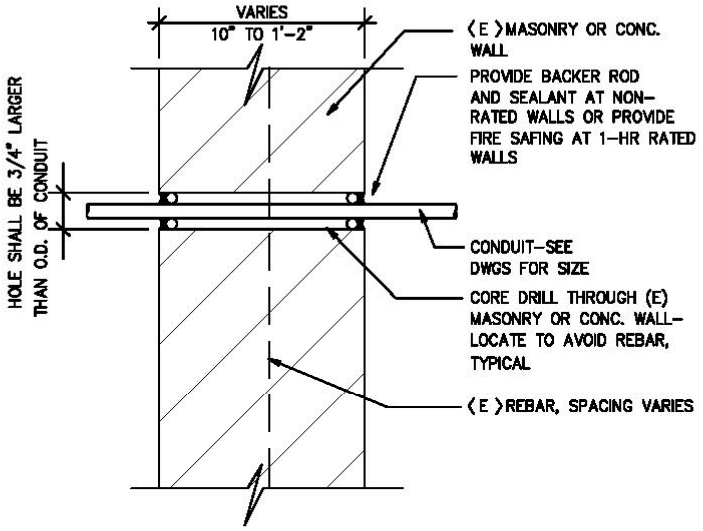

E2-10 CONDUIT THROUGH MASONRY OR CONC. WALL

Fresno Unified School District	FRESNO UNIFIED SCHOOL DISTRICT MAINTENANCE DEPARTMENT 4600 N. BRAWLEY AVE. P: 559.457.3261 FRESNO, CA 93722 F: 559.457.5709	LOCAL AREA NETWORKS VARIOUS SITES	SCALE: N.T.S. REVISION DATE: 02-23-07 SHEET #: E2-10

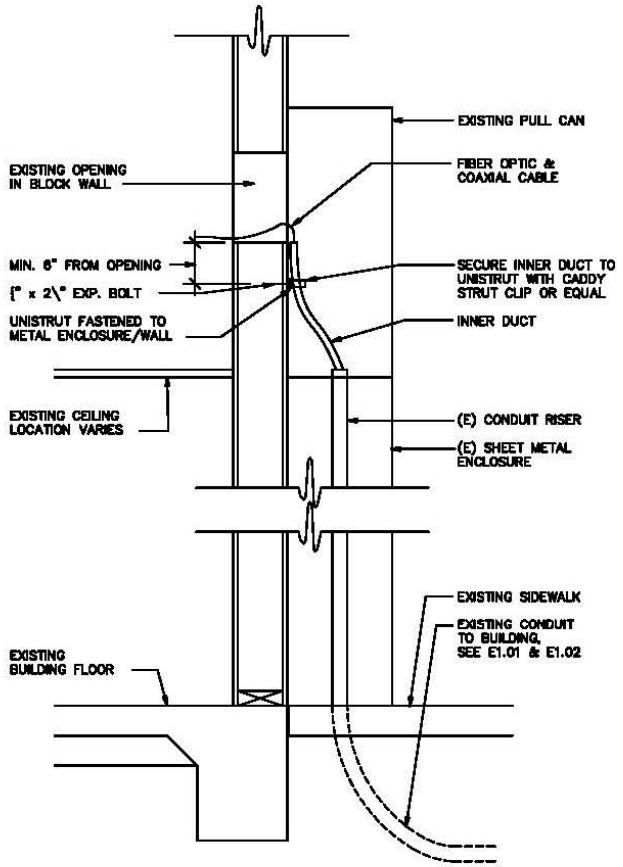

E2-15 TYPICAL FIBER OPTIC CABLE ENTRANCE DETAIL

Fresno Unified School District	FRESNO UNIFIED SCHOOL DISTRICT MAINTENANCE DEPARTMENT 4600 N. BRAWLEY AVE. P: 559.457.3261 FRESNO, CA 93722 F: 559.457.3709	LOCAL AREA NETWORKS VARIOUS SITES	SCALE: N.T.S. REVISION DATE: 02-23-07 SHEET #: E2-15

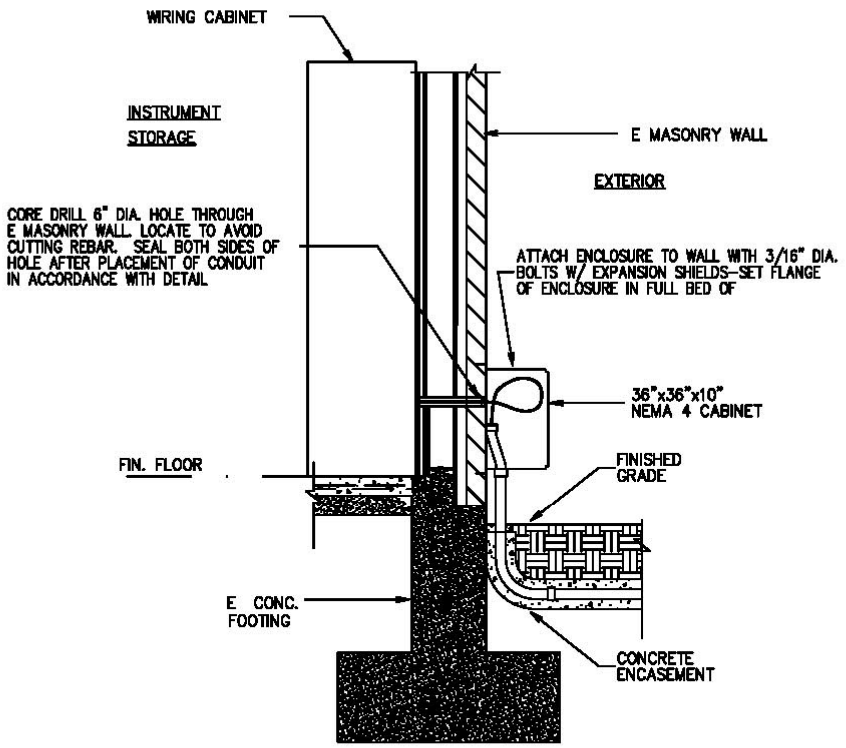

E2-19 SERVICE ENTRY @ BULDING

Fresno Unified School District	FRESNO UNIFIED SCHOOL DISTRICT MAINTENANCE DEPARTMENT 4600 N. BRAWLEY AVE. P: 559.457.3261 FRESNO, CA 93722 F: 559.457.3709	LOCAL AREA NETWORKS VARIOUS SITES	SCALE: N.T.S. REVISION DATE: 02-23-07 SHEET #: E2-19

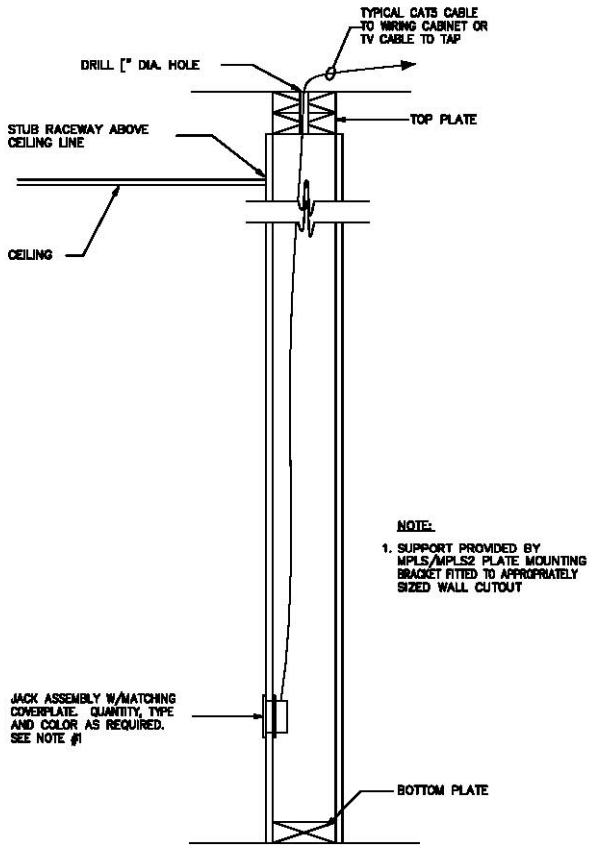

E2-21 PREFERRED DATA & CABLE / OUTLET DETAIL

Fresno Unified School District	FRESNO UNIFIED SCHOOL DISTRICT MAINTENANCE DEPARTMENT 4600 N. BRAWLEY AVE. P: 559.457.3261 FRESNO, CA 93722 F: 559.457.3709	LOCAL AREA NETWORKS VARIOUS SITES	SCALE: N.T.S. REVISION DATE: 02-23-07 SHEET #: E2-21

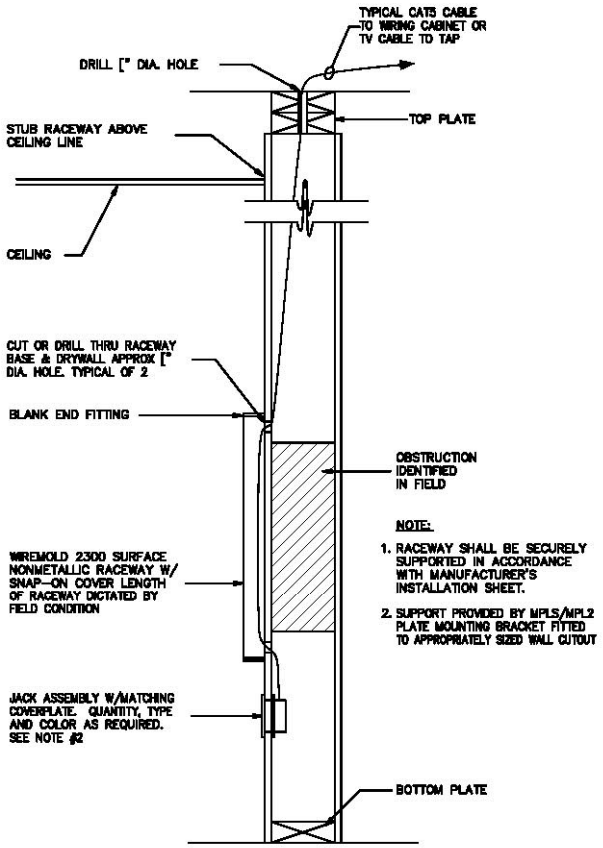

E2-22 TYPICAL DATA & CABLE / OUTLET DETAIL

Fresno Unified School District	FRESNO UNIFIED SCHOOL DISTRICT MAINTENANCE DEPARTMENT 4600 N. BRAWLEY AVE. P: 559.457.3261 FRESNO, CA 93722 F: 559.457.3709	LOCAL AREA NETWORKS VARIOUS SITES	SCALE: N.T.S. REVISION DATE: 02-23-07 SHEET #: E2-22

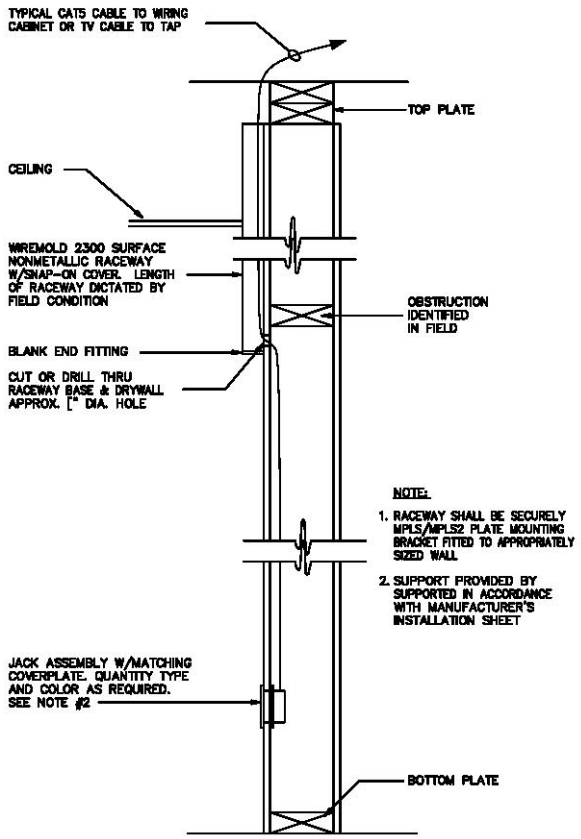

E2-23 ALTERNATE 5 DATA & TV CABLING / OUTLET DETAIL

Fresno Unified School District	FRESNO UNIFIED SCHOOL DISTRICT MAINTENANCE DEPARTMENT 4600 N. BRAWLEY AVE. P: 559.457.3261 FRESNO, CA 93722 F: 559.457.3709	LOCAL AREA NETWORKS VARIOUS SITES	SCALE: N.T.S. REVISION DATE: 02-23-07 SHEET #: E2-23

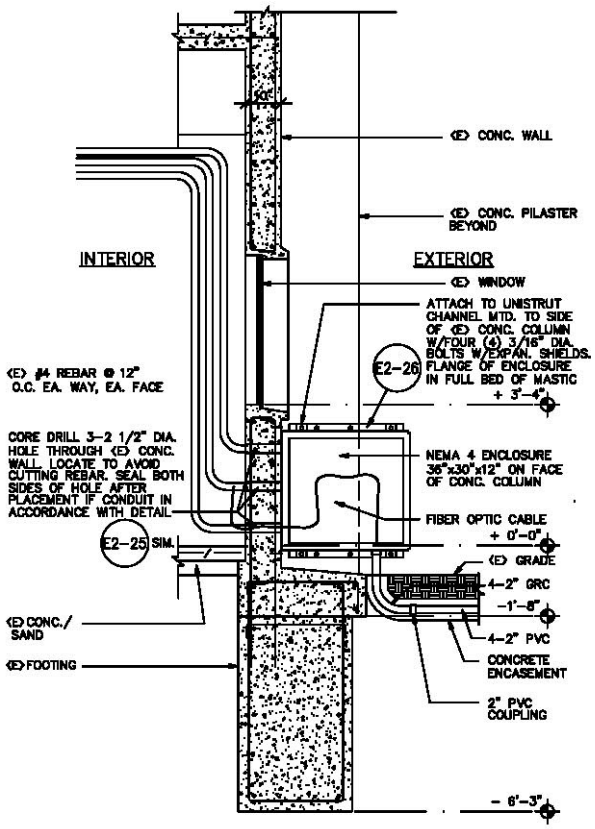

E2-24 SERVICE ENTRY

Fresno Unified School District	FRESNO UNIFIED SCHOOL DISTRICT MAINTENANCE DEPARTMENT 4600 N. BRAWLEY AVE. P: 559.457.3261 FRESNO, CA 93722 F: 559.457.3709	LOCAL AREA NETWORKS VARIOUS SITES	SCALE: N.T.S. REVISION DATE: 02-23-07 SHEET #: E2-24

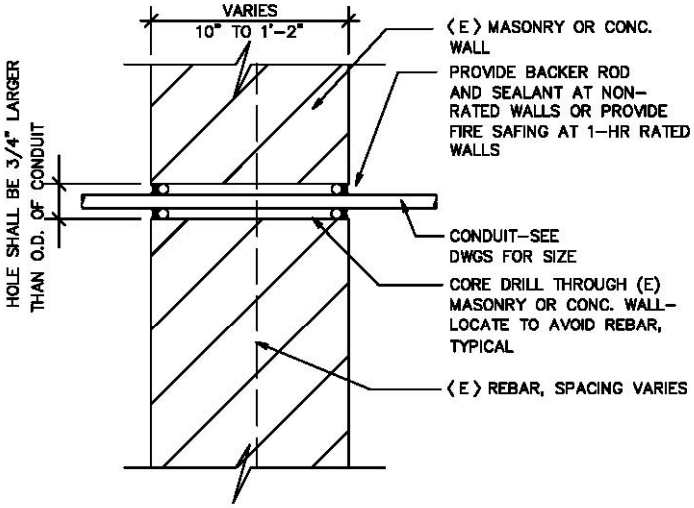

E2-25 CONDUIT THROUGH MASONRY OR CONC. WALL

Fresno Unified School District	FRESNO UNIFIED SCHOOL DISTRICT MAINTENANCE DEPARTMENT 4600 N. BRAWLEY AVE. P: 559.457.3261 FRESNO, CA 93722 F: 559.457.3709	LOCAL AREA NETWORKS VARIOUS SITES	SCALE: N.T.S. REVISION DATE: 02-23-07 SHEET #: E2-25

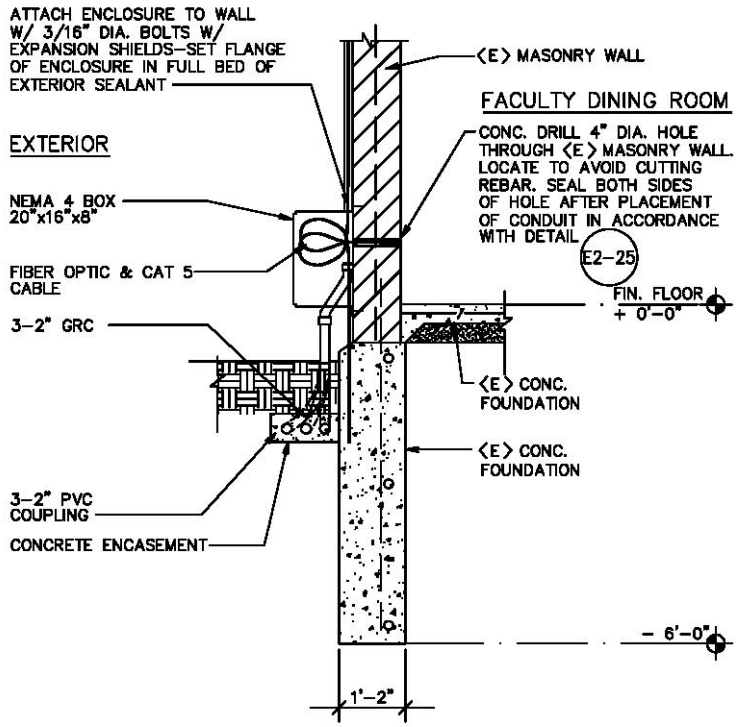

E2-27 SERVICE ENTRY

Fresno Unified School District	FRESNO UNIFIED SCHOOL DISTRICT MAINTENANCE DEPARTMENT 4600 N. BRAWLEY AVE. FRESNO, CA 93722 P: 559.457.3261 F: 559.457.3709	LOCAL AREA NETWORKS VARIOUS SITES	SCALE: N.T.S. REVISION DATE: 02-23-07 SHEET #: E2-27

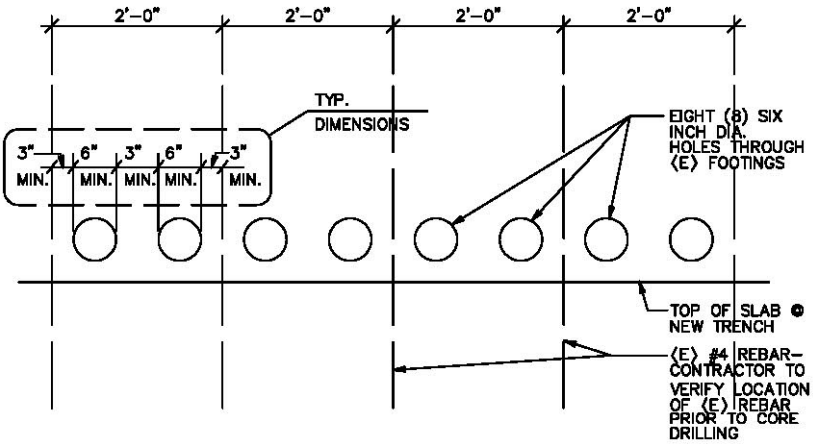

E2-28 ELEVATION @ CORE-DRILLED HOLES THROUGH EXIST. FTG.

Fresno Unified School District	FRESNO UNIFIED SCHOOL DISTRICT MAINTENANCE DEPARTMENT 4600 N. BRAWLEY AVE. FRESNO, CA 93722 P: 559.457.3261 F: 559.457.3709	LOCAL AREA NETWORKS VARIOUS SITES	SCALE: N.T.S. REVISION DATE: 02-23-07 SHEET #: E2-28

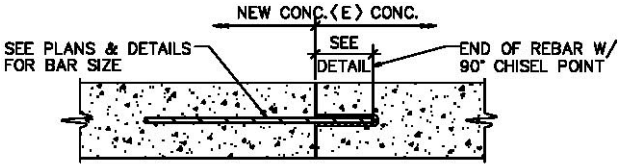

INSTALLATION:

1. DRILL HOLE 1/8" LARGER THAN REBAR DIAMETER.
2. CLEAN HOLE THOROUGHLY OF DUST AND FRAGMENTS WITH WATER, WIRE BRUSH, AND AIR.
3. INSTALL APPROPRIATE DIAMETER HILTI HEA CAPSULE (SEE MFR. RECOMMENDATIONS FOR SIZE) PER HILTI REQUIREMENTS.

E2-29 NEW CONCRETE SLAB DETAIL

Fresno Unified School District	FRESNO UNIFIED SCHOOL DISTRICT MAINTENANCE DEPARTMENT 4600 N. BRAWLEY AVE. P: 559.457.3261 FRESNO, CA 93722 F: 559.457.3709	LOCAL AREA NETWORKS VARIOUS SITES	SCALE: N.T.S. REVISION DATE: 02-23-07 SHEET #: E2-29

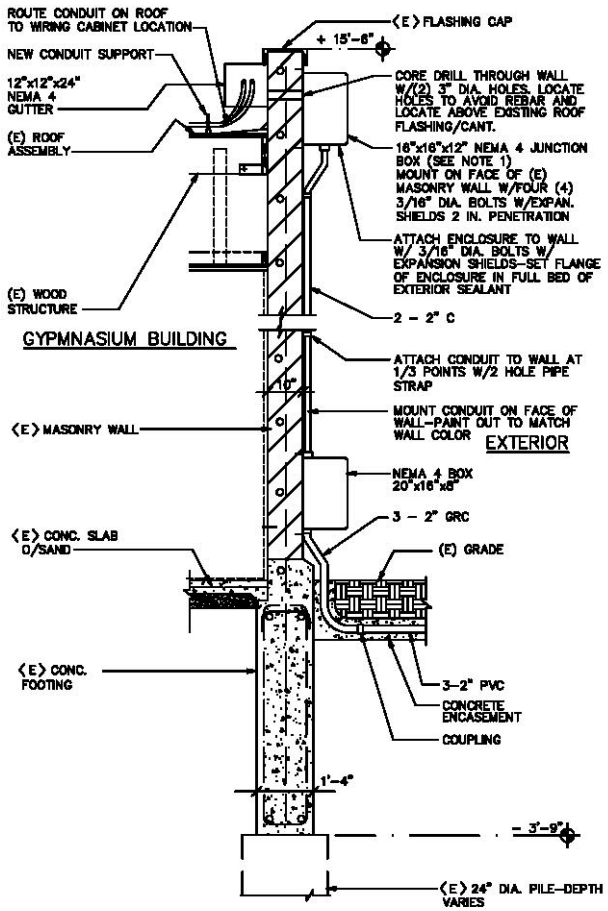

E2-30 SERVICE ENTRY

Fresno Unified School District	FRESNO UNIFIED SCHOOL DISTRICT MAINTENANCE DEPARTMENT 4600 N. BRAWLEY AVE. P: 559.457.3261 FRESNO, CA 93722 F: 559.457.3709	LOCAL AREA NETWORKS VARIOUS SITES	SCALE: N.T.S. REVISION DATE: 02-23-07 SHEET #: E2-30

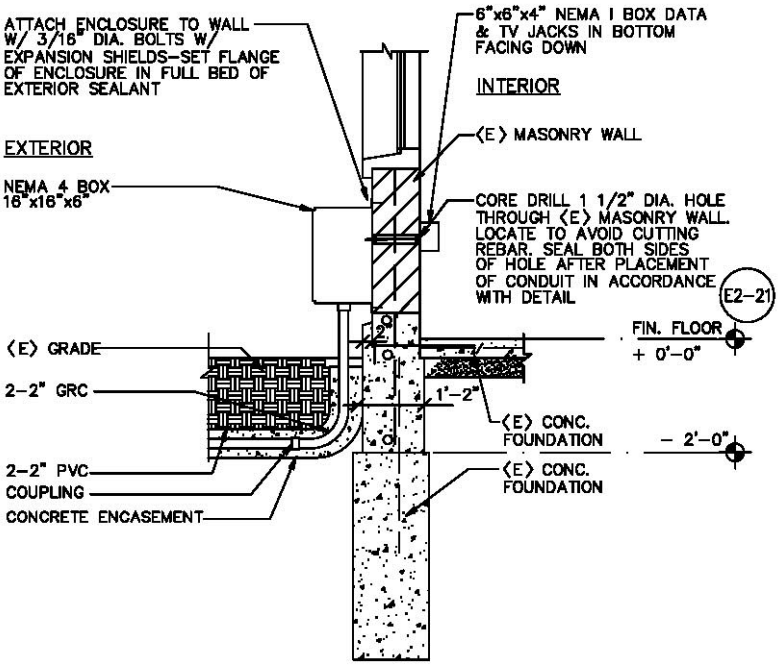

E2-31 SERVICE ENTRY

Fresno Unified School District	FRESNO UNIFIED SCHOOL DISTRICT MAINTENANCE DEPARTMENT 4600 N. BRAWLEY AVE. FRESNO, CA 93722 P: 559.457.3261 F: 559.457.3709	LOCAL AREA NETWORKS VARIOUS SITES	SCALE: N.T.S. REVISION DATE: 02-23-07 SHEET #: E2-31

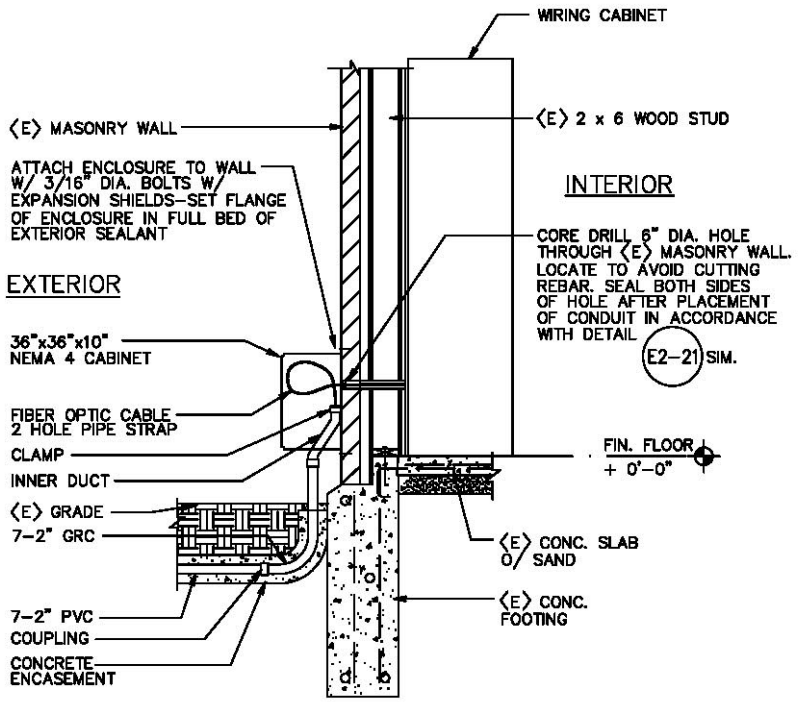

E2-32 SERVICE ENTRY

Fresno Unified School District	FRESNO UNIFIED SCHOOL DISTRICT MAINTENANCE DEPARTMENT 4600 N. BRAWLEY AVE. P: 559.457.3261 FRESNO, CA 93722 F: 559.457.3709	LOCAL AREA NETWORKS VARIOUS SITES	SCALE: N.T.S. REVISION DATE: 02-23-07 SHEET #: E2-32

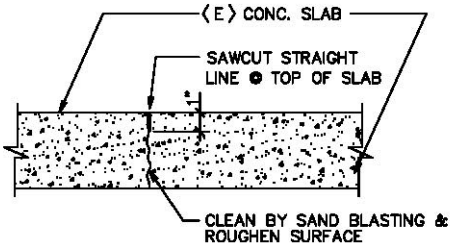

E2-33 TYPICAL SLAB CUTTING JOINT

Fresno Unified School District	FRESNO UNIFIED SCHOOL DISTRICT MAINTENANCE DEPARTMENT 4600 N. BRAWLEY AVE. P: 559.457.3261 FRESNO, CA 93722 F: 559.457.3709	LOCAL AREA NETWORKS VARIOUS SITES	SCALE: N.T.S. REVISION DATE: 02-23-07 SHEET #: E2-33

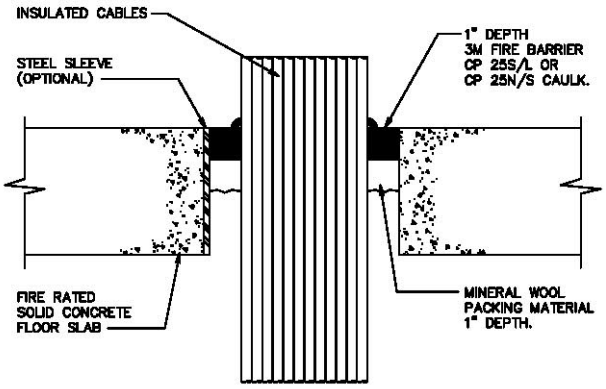

SYSTEM DETAILS

1. DRAWING NO. 5300–ICF1.01
2. SYSTEM JUSTIFICATION: UL THROUGH–PENETRATION FIRESTOP NO. 33 PER ASTM E 814 (ANSI/UL 1479) FIRE TEST.
3. ASSEMBLY: MINIMUM 4 1/2 IN. THICK, SOLID LIGHTWEIGHT OR NORMAL WEIGHT CONCRETE FLOOR. MAXIMUM OPENING SIZE– 8 1/4 IN. OPTIONAL SLEEVE SIZE – 4 IN. DIAMETER.
4. RATINGS: SEE TABLE BELOW.
5. PENETRATING ITEMS: MAXIMUM 500 MCM – SINGLE CONDUCTOR, MAXIMUM 3/0 AWG–MULTI–CONDUCTOR, MAXIMUM 100 PAIR TELEPHONE. JACKET / INSULATION: XLPE, PVC NEOPRENE RUBBER, HYPALON, OR SILICONE RUBBER. CONDUCTOR TYPE: COPPER OR ALUMINUM.

RATINGS TABLE

OPENING DIA.	PERCENT FILL	CAULK DEPTH	F RATING	T RATING	NOTES
2"	0	1"	3	2	BLANK
2"	59% max.	1/2"	2	1	MAX. 12 AVG.
2"	59% max	1/2"	2	0	
4"	4% – 56%	1"	3	0	SLEEVED
6"	10% – 44%	1"	3	0	
8"	20% – 38%	1"	3	0	

APPLICATION DETAILS

1. RECESS A MINIMUM 1 IN. THICKNESS OF MINERAL WOOL (OR EQUIVALENT) PACKING MATERIAL INTO THE OPENING, AND AROUND INDIVIDUAL CABLES IF POSSIBLE, TO PREVENT LEAKAGE OF CAULK PRIOR TO CURE.
2. INSTALL 3M FIRE BARRIER CP 25N/S OR CP 25S/L CAULK INTO THE OPENING TO THE APPROPRIATE DEPTH PER RATINGS TABLE ABOVE. WHEN POSSIBLE, INSTALL 3M FIRE BARRIER CAULK BETWEEN CABLES IN BUNDLE FOR IMPROVED SMOKE SEAL.

E2-51

PENETRATION FIRESTOP FOR INSULATED CABLES THROUGH A CONCRETE WALL

w / STEEL SLEEVE OPTIONAL

Fresno Unified School District	FRESNO UNIFIED SCHOOL DISTRICT MAINTENANCE DEPARTMENT 4600 N. BRAWLEY AVE. P: 559.457.3261 FRESNO, CA 93722 F: 559.457.3709	LOCAL AREA NETWORKS VARIOUS SITES	SCALE: N.T.S. REVISION DATE: 02-23-07 SHEET #: E2-51

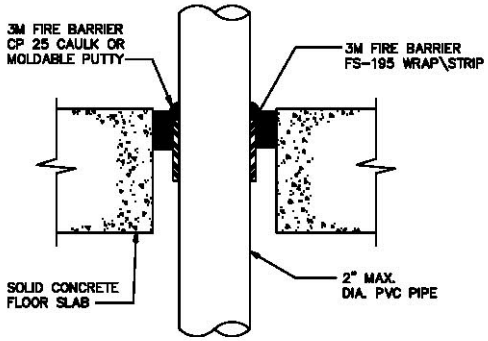

SYSTEM DETAILS

1. DRAWING NO. 5300-PPF71.01
2. SYSTEM JUSTIFICATION: UL THROUGH-PENETRATION FIRESTOP SYSTEM NO.562 PER ASTM E 814 (ANSI/UL 1479) FIRE TEST.
3. ASSEMBLY: MINIMUM THICKNESS OF SOLID CONCRETE FLOOR IS 4-1/2 in.
4. RATINGS: F-2 hr., T-0 hr., MAXIMUM 2-IN. PVC PIPE VENTED, T-2hr. MAXIMUM 1-in. PP 2-in. PB AND PVC CLOSED.
5. PENETRATING ITEMS:
   A. NORMINAL 2-in. DIAMETER (OR SMALLER) SCH. 40 (OR HEAVIER) PVC PIPES IN CLOSED OR VENTED SYSTEMS.
   B. NORMINAL 2-in. DIAMETER (OR SMALLER) SDR-17 (OR HEAVIER) PB PIPES IN CLOSED SYSTEMS.
   C. NORMINAL 1-in. DIAMETER (OR SMALLER) SCH. 40 (OR HEAVIER) PP PIPES IN CLOSED SYSTEMS.

APPLICATION DETAILS

1. SELECT THE PROPER NUMBER OF 3M FIRE BARRIER FS-195 WRAP/STRIPS FOR THE NOMINAL PIPE SIZE FROM TABLE 1.

PIPE DIAMETER (INCHES)	PIPE TYPE	ANNULAR SPACE (INCHES)	PIPING SYSTEM	NO. OF FS-195 WRAP / STRIPS
1/2 - 2	PVC	1/2 - 7/8	VENTED	2
1/2 - 2	PB, PVC	1/4 - 5/8	CLOSED	1
1/2 - 1	PP	1/4 - 5/8	CLOSED	1

2. TIGHTLY WRAP THE PROPER NUMBER OF FS-195 WRAP/STRIP AROUND THE PLASTIC PIPE, FOIL SIDE OUT. SECURE WITH TAPE OR TIE WIRE. RECESS THE FS-195 WRAP/STRIP 1/4 in INTO THE OPENING ON THE TOP SURFACE OF THE FLOOR.
3. CAULK THE ANNULAR SPACE AROUND THE APPLIED FS-195 WRAP/STRIP TO THE MAXIMUM EXTENT POSSIBLE AND APPLY A 1/4 in. DEPTH OF 3M FIRE BARRIER CP-25 CAULK TO THE TOP EDGE OF THE FS-195 WRAP/STRIP

E2-52

PENETRATION FIRESTOP DETAIL FOR 2" MAX. DIA. PLASTIC PIPE/CONDUIT THROUGH A CONCRETE FLOOR

Fresno Unified School District	FRESNO UNIFIED SCHOOL DISTRICT MAINTENANCE DEPARTMENT 4600 N. BRAWLEY AVE. P: 559.457.3261 FRESNO, CA 93722 F: 559.457.3709	LOCAL AREA NETWORKS VARIOUS SITES	SCALE: N.T.S. REVISION DATE: 02-23-07 SHEET #: E2-52

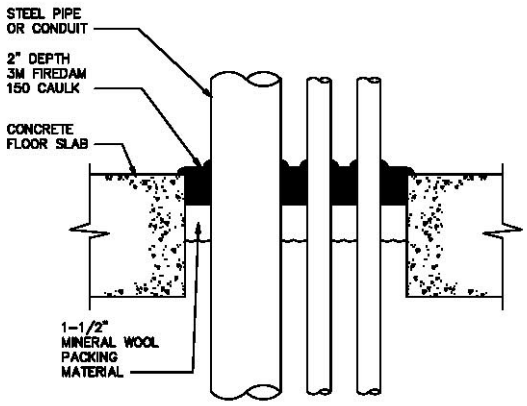

SYSTEM DETAILS

1. DRAWING NO. 5300-PPF71.01
2. SYSTEM JUSTIFICATION: UL THROUGH-PENETRATION FIRESTOP SYSTEM NO.170 PER ASTM E 814 (ANSI/UL 1479) FIRE TEST.
3. ASSEMBLY: MINIMUM THICKNESS OF SOLID CONCRETE FLOOR IS 4-1/2 in.
4. RATINGS: F-3 hr., T- 1-1/2 hr., WHEN NOMINAL 1-in. DIAMETER (OR SMALLER) STEEL PIPE, STEEL CONDUIT OR STEEL EMT IS USED THE T RATING IS 1 1/2 hr.
5. PENETRATING ITEMS:
   A. NORMINAL 3-in. DIAMETER (OR SMALLER) SCH. 5S (OR HEAVIER) STEEL PIPE.
   B. NORMINAL 3-in. DIAMETER (OR SMALLER) STEEL CONDUIT.
   C. NORMINAL 3-in. DIAMETER (OR SMALLER) STEEL EMT CONDUIT
   D. NORMINAL 3-in. DIAMETER (OR SMALLER) COPPER PIPE.

APPLICATION DETAILS

1. MAXIMUM AREA OF THROUGH-OPENING NOT TO EXCEED 144 sq. in. WITH A MAXIMUM DIMENSION OF 12.
2. METAL PIPES AND/OR CONDUITS TO BE INSTALLED WITH A MINIMUM CLEARANCE OF 1 in. TO ADJACENT PIPES / CONDUITS AND TO THE PERIMETER OF THE THROUGH-OPENING.
3. RECESS A NOMINAL 1-1/2in. THICKNESS OF pcf. MINERAL WOOL SAFING , 2 in. FROM THE SURFACE OF THE FLOOR.
4. FILL THE ANNULAR SPACE AROUND THE PIPE WITH A MINIMUM 2-in. DEPTH OF 3M FIREDAM 150 CAULK.
5. APPLY AN ADDITIONAL BEAD OF CAULK AROUND PERIMETER OF THROUGH-OPENING LAPPING 1/4 TO 1/2 in. ONTO THE FLOOR.

E2-53 PENETRATION FIRESTOP DETAIL FOR MULTIPLE MULTIPLE STEEL PIPE / CONDUIT THROUGH A CONCRETE FLOOR

Fresno Unified School District	FRESNO UNIFIED SCHOOL DISTRICT MAINTENANCE DEPARTMENT 4600 N. BRAWLEY AVE. P: 559.457.3261 FRESNO, CA 93722 F: 559.457.3709	LOCAL AREA NETWORKS	SCALE:	N.T.S.
			REVISION DATE:	02-23-07
		VARIOUS SITES	SHEET #:	E2-53

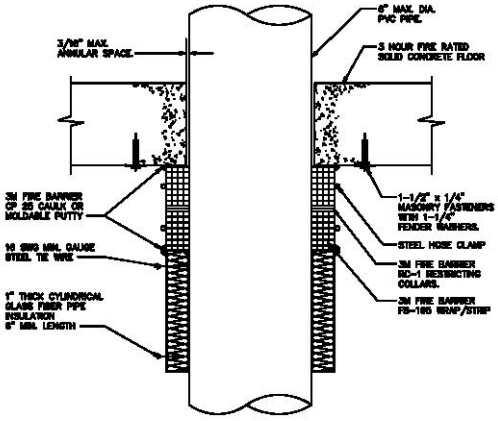

SYSTEM DETAILS

1. DRAWING NO. 5300-PPF6.09
2. SYSTEM JUSTIFICATION: UL THROUGH-PENETRATION FIRESTOP NO. 84 CONFIGURATION F+ PER ASTM E 814 (ANSI/UL 1479) FIRE TEST.
3. ASSEMBLY: MINIMUM THICKNESS OF SOLID CONCRETE FLOOR IS 4-1/2 in.
4. RATINGS: F – 3 hr., T – 3 hr.
5. PENETRATING ITEMS: NOMINAL 6 in. DIA (OR SMALLER) SCH. 40 (OR HEAVIER) POLYVINYL CHLORIDE. (PVC).

APPLICATION DETAILS

1. TWO STACKS OF 4 WRAPS OF 3M FIRE BARRIER FS-195 WRAP/STRIP ARE REQUIRED.
2. WHEN USING 3M FIRE BARRIER CP 25N/S CAULK ON PRESSURIZED PIPE FOR SEALING, PLACE A WRAP OF FOIL TAPE IN THE CAULK CONTRACT AREA. NO FOIL BARRIER IS NECESSARY WHEN USING CP 25WB CAULK OR MOLDABLE PUTTY.
3. TIGHTLY WRAP 4 (FOUR) INDIVIDUAL FS-195 WRAP/STRIPS, FOIL SIDE OUT, AROUND THE PIPE. SECURE EACH WRAP WITH ALUMINUM FOIL TAPE OR EQUIVALENT. MAKE SURE FS-195 WRAP/STRIPS BUTT SECURELY AGAINST THE UNDERSIDE OF THE FLOOR. STAGGER THE BUTTED SEAMS.
4. APPLY 3M FIRE BARRIER RC-1 RESTRICTING COLLAR. REMOVE ENOUGH RC-1 RESTRICTING COLLAR TO MAKE ONE WRAP AROUND THE APPLIED FS-195 WRAP/STRIP WITH A MINIMUM 1in. OVERLAP. BEND THE MOUNTING TABS AWAY FROM THE PIPE AT RIGHT ANGLE FLUSH WITH FLOOR. WARNING: EDGES OF THE RC-1 RESTRICTING COLLAR ARE SHARP. HANDLE WITH CARE.
5. SECURE THE RC-1 RESTRICTING COLLAR AROUND THE PIPE WITH A STEEL HOSE CLAMP CENTERED ON THE RC-1 RESTRICTING COLLAR ASSEMBLY.
6. SECURE THE COLLAR ASSEMBLY TO THE FLOOR SLAB WITH 1-1/2 x 1/4 in. MASONRY FASTENERS. USE 1-1/4 in. DIAMETER FENDER WASHERS ON THE MOUNTING TABS. SECURE ALL MOUNTING TABS.
7. FOLD RC-1 RESTRICTING COLLAR SUPPORT TABS IN TO LOCK THE FS-195 WRAP/STIP IN PLACE.
8. REPEAT STEP 3, BUTTING THE FS-195 WRAP/STRIP SSECURELY AGAINST THE BOTTOM OF THE APPLIED COLLAR ASSEMBLY.
9. REMOVE ENOUGH RC-1 RESTRICTING COLLAR TO MAKE THE SECOND COLLAR. INSTALL THE COLLAR WITH THE MOUNTING TABS STRAIGHT UP, SLIGHTLY BELOW THE APPLIED COLLARS' HOSE CLAMP. APPLY THE HOSE CLAMP TO THE SECOND RC-1 RESTRICTING COLLAR ASSEMBLY LOOSELY ENOUGH TO REPOSITION THE COLLAR VERTICALLY AND BEND THE SUPPORT TABS INWARD TO HOLD THE WRAP IN PLACE.
10. LOOSEN THE FIRST RC-1 RESTRICTING COLLAR HOSE CLAMP TO ALLOW THE MOUNTING TABS OF THE SECOND RC-1 RESTRICTING COLLAR TO BE SLID UNDER THE HOSE CLAMP. TIGHTEN THE SECOND COLLAR ASSEMBLY HOSE CLAMP. TIGHTEN THE FIRST COLLAR ASSEMBLY HOSE CLAMP AND BEND EVERY OTHER TAB OF THE SECOND COLLAR ASSEMBLY OVER THE FIRST COLLAR ASSEMBLIES HOSE CLAMP.

E2-54 PENETRATION FIRESTOP DETAIL FOR A 6" MAX. DIA. PVC PLASTIC PIPE TROUGH A SOLID CONCRETE FLOOR

Fresno Unified School District	FRESNO UNIFIED SCHOOL DISTRICT MAINTENANCE DEPARTMENT 4600 N. BRAWLEY AVE. P: 559.457.3261 FRESNO, CA 93722 F: 559.457.3709	LOCAL AREA NETWORKS VARIOUS SITES	SCALE: N.T.S. REVISION DATE: 02-23-07 SHEET #: E2-54	

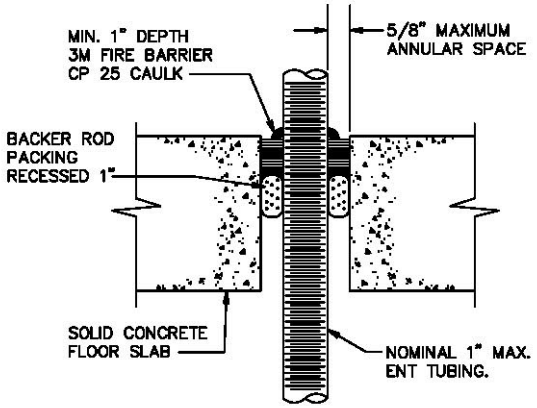

SYSTEM DETAILS

1. DRAWING NO. 5300–PPF57.02
2. SYSTEM JUSTIFICATION: UL THROUGH–PENETRATION FIRESTOP SYSTEM NO.394 CONFIGURATION B, PER ASTM E 814 (ANSI/UL 1479) FIRE TEST.
3. ASSEMBLY: MINIMUM THICKNESS OF SOLID CONCRETE FLOOR IS 4–1/2 in. MAY ALSO BE CONSTRUCTED OF ANY UL CLASSIFIED CONCRETE BLOCKS.
4. RATINGS: F – 2 hr., T – 2 hr.
5. PENETRATING ITEMS: NOMINAL 1–in. DIAMETER (OR SMALLER) ENT CONSTRUCTED OF POLYVINYL CHLORIDE. SOMETIMES REFERRED TO AS SMURF TUBING OR CONDUIT.

APPLICATION DETAILS

1. THE ANNULAR SPACE AROUND THE ENT IS TO BE 1/2 TO 5/8 in.
2. RECESS PACKING MATERIAL, BACKROD, FIBERGLASS INSULATION OR MINERAL WOOL SAFING, 1 in. FROM THE FLOOR SURFACE.
3. FILL THE ANNULAR SPACE TO A MINIMUM 1–in. DEPTH WITH 3M FIRE BARRIER CP–25 CAULK.

E2-55 **PENETRATION FIRESTOP DETAIL FOR 1" MAX. DIA. ENT TUBING THROUGH A CONCRETE FLOOR**

Fresno Unified School District	FRESNO UNIFIED SCHOOL DISTRICT MAINTENANCE DEPARTMENT 4600 N. BRAWLEY AVE. P: 559.457.3261 FRESNO, CA 93722 F: 559.457.3709	LOCAL AREA NETWORKS VARIOUS SITES	SCALE: N.T.S. REVISION DATE: 02-23-07 SHEET #: E2-55

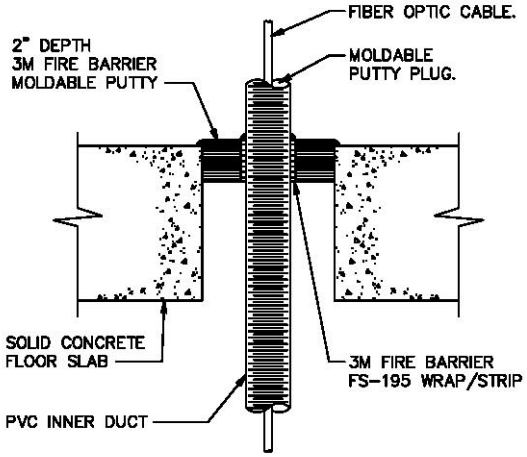

SYSTEM DETAILS

1. DRAWING NO. 5300-ICF61.01
2. SYSTEM JUSTIFICATION: UL THROUGH-PENETRATION FIRESTOP SYSTEM NO.448 CONFIGURATION A, PER ASTM E 814 (ANSI/UL 1479) FIRE TEST.
3. ASSEMBLY: MINIMUM 4-1/2 in. THICK, SOLID LIGHTWEIGHT OR NORMAL WEIGHT CONCRETE FLOOR. MAXIMUM OPENING SIZE 4-in. DIAMETER.
4. RATINGS: F - 2 hr., T - 2 hr.
5. PENETRATING ITEMS: 2-in. DIAMETER PVC INNER DUCT AND MULTIPLE FIBER OPTIC COMMUNICATION CABLE WITH A MAXIMUM 3/4 in. O.D. - PVC OR JACKETED.

APPLICATION DETAILS

1. TIGHTLY WRAP A SINGLE LAYER OF 3M FIRE BARRIER FS-195 WRAP/STRIP AROUND THE INNER DUCT AND SECURE WITH 16-GAUGE STEEL TIE WIRE. THE TOP OF THE FS-195 WRAP/STRIP SHOULD BE EVEN WITH THE TOP SURFACE OF THE FLOOR WHEN INSTALLED.
2. PACK THE REMAINING SPACE WITH A NOMINAL 2-in. DEPTH OF 3M FIRE BARRIER MOLDABLE PUTTY.
3. SEAL THE INTERFACE BETWEEN THE FS-195 WRAP/STRIP AND INNER DUCT WITH A BEAD OF MOLDABLE PUTTY.
4. INSTALL A PLUG OF 3M FIRE BARRIER MOLDABLE PUTTY IN THE END OF THE INNER DUCT.

E2-56 **PENETRATION FIRESTOP FOR SINGLE FIBER OPTIC CABLE / PVC INNER DUCT THROUGH**

Fresno Unified School District	FRESNO UNIFIED SCHOOL DISTRICT MAINTENANCE DEPARTMENT 4600 N. BRAWLEY AVE. P: 559.457.3261 FRESNO, CA 93722 F: 559.457.3709	LOCAL AREA NETWORKS VARIOUS SITES	SCALE: N.T.S. REVISION DATE: 02-23-07 SHEET #: E2-56

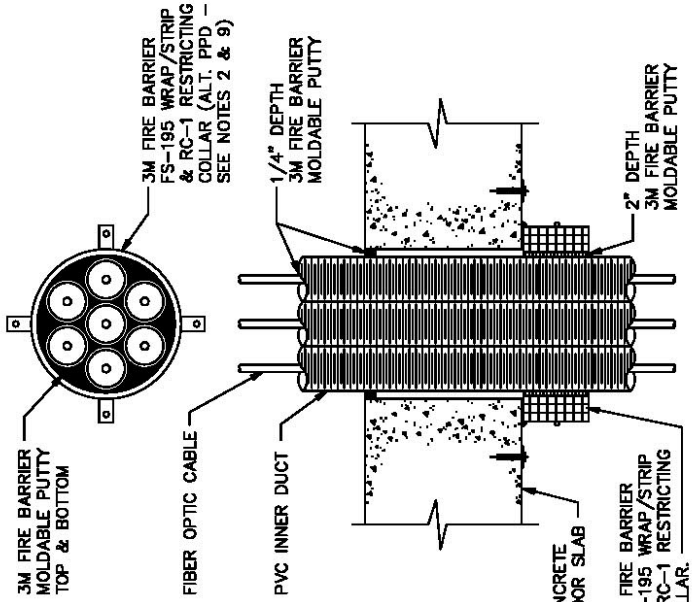

PENETRATION FIRESTOP FOR MULTIPLE FIBER OPTIC CABLE/PVC INNER DUCT THROUGH A CONCRETE FLOOR

E2-57

SYSTEM DETAILS

1. DRAWING NO. 5300-ICF61.03
2. SYSTEM JUSTIFICATION: UL THROUGH-PENETRATION FIRESTOP SYSTEM NO.448 CONFIGURATION B, PER ASTM E 814 (ANSI/UL 1479) FIRE TEST.
3. ASSEMBLY: MINIMUM 4-1/2 in. THICK, SOLID LIGHTWEIGHT OR NORMAL WEIGHT CONCRETE FLOOR. MAXIMUM OPENING SIZE 5-in. DIAMETER.
4. RATINGS: F - 2 hr., T - 2 hr.
5. PENETRATING ITEMS: MAXIMUM 1-1/4 in. DIAMETER PVC INNER DUCT IN A BUNDLE. MULTIPLE FIBER OPTICAL COMMUNICATION CABLE WITH A MAXIMUM O.D. OF 3/4 in. PVC OR P.E. JACKETED. MINIMUM THREE INNER DUCT, MAXIMUM SEVEN INNER DUCT PER BUNDLE. MAXIMUM ANNULAR SPACE BETWEEN INNER DUCT BUNDLE OPENING TO BE 1/4 in.

APPLICATION DETAILS

1. AT THE CEILING, PACK A NOMINAL 2-in. DEPTH OF 3M FIRE BARRIER MOLDABLE PUTTY INTO THE VOIDS WITHIN THE BUNDLE OF INNER DUCT. ALSO PACK THE MOLDABLE PUTTY AROUND THE EXTERIOR OF THE BUNDLE TO ACHIEVE A CIRCULAR FORM.
2. SELECT THE PROPER NUMBER OF 3M FIRE BARRIER FS-195 WRAP/STRIPS FOR THE SIZE OF THE INNER DUCT BUNDLE FROM THE TABLE BELOW:

BUNDLE DIAMETER	MINIMUM NO. OF 3M FIRE BARRIER FS-195 WRAP/STRIPS	ALTERNATIVE
2-1/2 in.	1	PPD-2
3-1/2 in.	2	PPD-3
4-1/2 in.	3	PPD-4

3. TIGHTLY WRAP THE FS-195 WRAP/STRIP, FOIL SIDE OUT, AROUND THE INNER DUCT AND TEMPORARILY SECURE WITH TIE WIRE OR TAPE. BUTT THE SECURED FS-195 WRAP/STRIP AGAINST THE UNDERSIDE OF THE CONCRETE FLOOR. STAGGER THE BUTTED SEAMS IF MORE THAN ONE LAYER OF FS-195 WRAP/STRIP IS REQUIRED.
4. APPLY THE 3M FIRE BARRIER RC-1 RESTRICTING COLLAR. REMOVE ENOUGH RC-1 RESTRICTING COLLAR TO MAKE ONE WRAP AROUND THE APPLIED FS-195 WRAP/STRIP, WITH A MINIMUM 1-in. OVERLAP. BEND THE MOUNTING TABS AWAY FROM THE INNER DUCT BUNDLE AT RIGHT ANGLES, FLUSH WITH THE UNDERSIDE OF THE FLOOR.
5. FASTEN THE RC-1 RESTRICTING COLLAR TIGHTLY AROUND THE INNER DUCT BUNDLE WITH A STEEL HOSE CLAMP, CENTERING THE CLAMP ON THE COLLAR ASSEMBLY.

Fresno Unified School District	FRESNO UNIFIED SCHOOL DISTRICT MAINTENANCE DEPARTMENT 4600 N. BRAWLEY AVE. FRESNO, CA 93722 P: 559.457.3261 F: 559.457.3709	LOCAL AREA NETWORKS VARIOUS SITES	SCALE: N.T.S. REVISION DATE: 02-23-07 SHEET #: E2-57

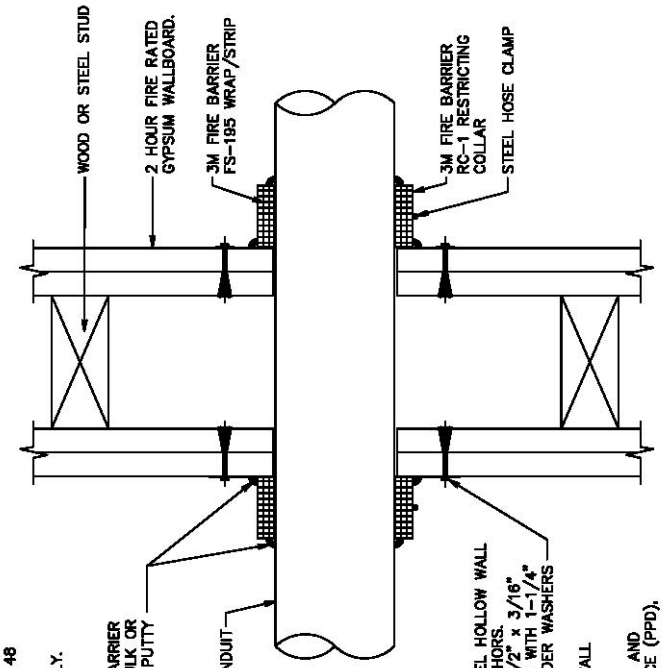

SYSTEM DETAILS

1. DRAWING NO. 5300-PPG26.02
2. SYSTEM JUSTIFICATION: UL THROUGH-PENETRATION FIRESTOP SYSTEM NO.148 CONFIGURATION A, PER ASTM E 814 (ANSI/UL 1479) FIRE TEST.
3. ASSEMBLY: 2 HR. FIRE-RATED GYPSUM WALLBOARD/STUD WALL ASSEMBLY.
4. RATINGS: REFER TO RATINGS TABLE.

RATINGS TABLE

MAXIMUM NOMINAL PIPE SIZE INCHES	PIPE TYPE	F RATING	T RATING
4	ABS	1-1/2	1-1/2
2	PP	1-1/2	1-1/2
4	PVC	2	2

5. PENETRATING ITEMS:
   A. NOMINAL 4-IN. DIAMETER (OR SMALLER) SCH. 40 (OR HEAVIER) PVC PIPE IN CLOSED OR VENTED SYSTEMS.
   B. NOMINAL 4-IN. DIAMETER (OR SMALLER) SCH. 40 (OR HEAVIER) SOLID-CORE ACRYLONITRILE BUTADIENE STYRENE (ABS) PIPES IN CLOSED OR VENTED SYSTEMS.
   C. NOMINAL 4-IN. DIAMETER (OR SMALLER) SCH. 40 (OR HEAVIER) POLYPROPYLENE (PP) PIPE.

APPLICATION DETAILS

1. INSTALL THE FIRESTOP SYSTEM SYMMETRICALLY ON BOTH SIDES OF THE WALL ASSEMBLY.
2. AS AN ALTERNATIVE TO THE 3M FIRE BARRIER RC-1 RESTRICTING COLLAR AND FS-195 WRAP/STRIP ASSEMBLY THE 3M FIRE BARRIER PLASTIC PIPE DEVICE (PPD), UL FILE NO. R9269, MAY BE SUBSTITUTED.
3. SELECT PROPER NUMBER OF FS-195 WRAP/STRIPS OR PPD FOR NOMINAL PIPE SIZE YOU ARE USING FROM THE APPLICATION TABLE.

APPLICATION TABLE

NOMINAL PIPE DIAMETER INCHES	MINIMUM NO. OF FS-195 WRAP/STRIPS	PPD
1/2 TO 1	1	N/A
1.5	1	PPD 1-1/2"
2.0	1	PPD 2"
3.0	2	PPD 3"
4.0	3	PPD 4"

E2-58

PENETRATION FIRESTOP DETAIL FOR 4" MAX. DIA. ABS. & PVC PLASTIC PIPE THOUGH A ONE-HOUR GYPSUM WALLBOARD ASSEMBLY

Fresno Unified School District

FRESNO UNIFIED SCHOOL DISTRICT
MAINTENANCE DEPARTMENT
4600 N. BRAWLEY AVE. FRESNO, CA 93722
P: 559.457.3261 F: 559.457.3709

LOCAL AREA NETWORKS
VARIOUS SITES

SCALE: N.T.S.
REVISION DATE: 02-23-07
SHEET #: E2-58

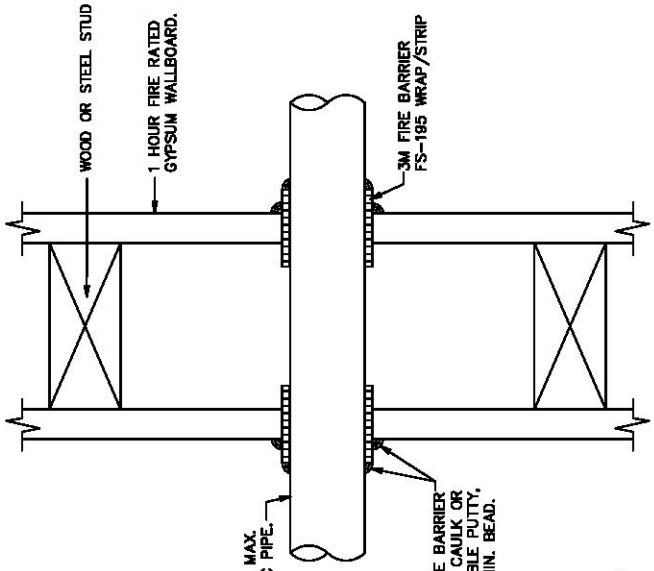

SYSTEM DETAILS

1. DRAWING NO. 5300-PPG26.03
2. SYSTEM JUSTIFICATION: UL THROUGH-PENETRATION FIRESTOP SYSTEM NO.148 CONFIGURATION B, PER ASTM E 814 (ANSI/UL 1479) FIRE TEST.
3. ASSEMBLY: 1 HR. FIRE-RATED GYPSUM WALLBOARD/STUD WALL ASSEMBLY.
4. RATINGS: F – 1 hr., T – 1hr.
5. PENETRATING ITEMS:
   A. NOMINAL 2-IN. DIAMETER (OR SMALLER) SCH. 40 (OR HEAVIER) PVC PIPE IN CLOSED OR VENTED SYSTEMS.
   B. NOMINAL 2-IN. DIAMETER (OR SMALLER) SDR11 (OR HEAVIER) POLYBUTYLENE (PB) PIPES IN CLOSED OR VENTED SYSTEMS.
   C. NOMINAL 2-IN. DIAMETER (OR SMALLER) SCH. 40 (OR HEAVIER) POLYBUTYLENE (PB) PIPES IN CLOSED OR VENTED SYSTEMS.

APPLICATION DETAILS

1. INSTALL THE FIRESTOP SYSTEM SYMMETRICALLY ON BOTH SIDES OF THE WALL ASSEMBLY.
2. THE ANNULAR SPACE AROUND THE PIPE, PRIOR TO THE INSTALLATION OF THE 3M FIRE BARRIER FS- 195 WRAP/STRIP, SHALL BE 1/4 INCH TO 3/8 INCH. IF THE ANNULAR SPACE AROUND THE PIPE IS GREATER THAN 1/4 in. AFTER THE APPLICATION OF THE FS-195 WRAP/STRIP, INSTALL ADDITIONAL FS-195 WRAP/STRIP UNTIL THE ANNULAR SPACE IS LESS THAN 1/4 INCH.
3. WHEN USING 3M FIRE BARRIER CP 25N/S CAULK FOR SEALING PRESSURIZED PIPE PLACE A WRAP OF FOIL TAPE IN THE CAULK CONTACT AREA. NO FOIL BARRIER IS NECESSARY WHEN USING CP 25WB CAULK OR MOLDABLE PUTTY.
4. TIGHTLY WRAP THE FS-195 WRAP/STRIP AROUND THE PLASTIC PIPE FOIL SIDE OUT. SECURE WITH TAPE OR STEEL TIE WIRE.
5. SLIDE THE FS-195 WRAP/STRIP INTO THE OPENING LEAVING APPROXIMATELY 3/4 INCH EXPOSED BEYOND THEWALL SURFACE.
6. SEAL THE SYSTEM WITH A 1/4 INCH BEAD OF 3M FIRE BARRIER CP 25 CAULK OR MOLDABLE PUTTY AT THE WALL/ FS-195 WRAP/STRIP INTERFACE AND THE PIPE / FS-195 WRAP/STRIP INTERFACE.

E2-59

PENETRATION FIRESTOP DETAIL FOR 2" MAX. DIA. PB, PP, PVC PLASTIC PIPE / CONDUIT THROUGH A GYPSUM WALLBOARD ASSEMBLY

Fresno Unified School District

FRESNO UNIFIED SCHOOL DISTRICT
MAINTENANCE DEPARTMENT
4600 N. BRAWLEY AVE. P: 559.457.3261
FRESNO, CA 93722 F: 559.457.3709

LOCAL AREA NETWORKS

VARIOUS SITES

SCALE:	N.T.S.
REVISION DATE:	02-23-07
SHEET #:	E2-59

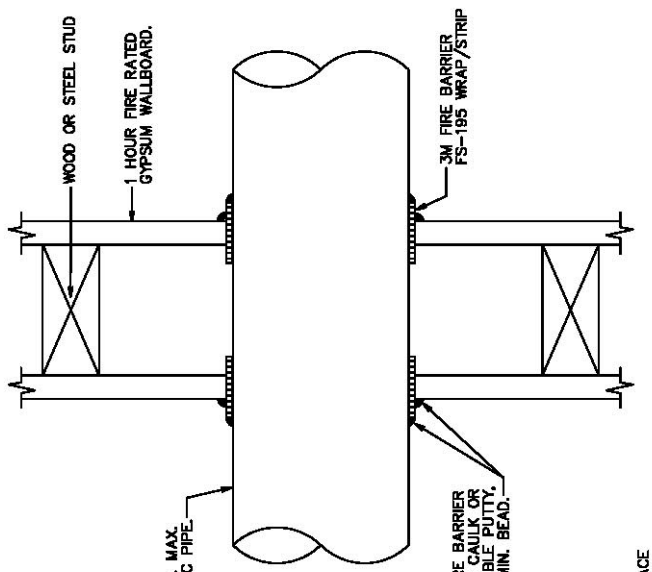

SYSTEM DETAILS

1. DRAWING NO. 5300-MPG25.05
2. SYSTEM JUSTIFICATION: UL THROUGH-PENETRATION FIRESTOP SYSTEM NO.147, CONFIGURATION B, PER ASTM E 814 (ANSI/UL 1479) FIRE TEST.
3. ASSEMBLY: 1 HR. FIRE RATED GYPSUM WALLBOARD/STYD WALL ASSEMBLY. STEEL PIPES OR CONDUITS LARGER THAN NOMINAL 4-in. DIAMETER MAY ONLY BE USED IN WALLS CONSTRUCTED USING STEEL CHANNEL STUDS.
4. RATINGS: F – 1 hr., T – 1hr. ON 1-in. DIAMETER (OR SMALLER) FLEXIBLE STEEL CONDUIT. T RATING IS 0 hr. ON OTHER ITEMS LISTED.
5. PENETRATING ITEMS:
   A. NOMINAL 12-IN. DIAMETER (OR SMALLER) SCH. 10S (OR HEAVIER) STEEL PIPE.
   B. NOMINAL 6-IN. DIAMETER (OR SMALLER) RIGID STEEL CONDUIT,
   C. NOMINAL 4-in.. DIAMETER (OR SMALLER) STEEL EMT,
   D. NOMINAL 4-in.. DIAMETER (OR SMALLER) TYPE L (OR HEAVIER) COPPER PIPE.
   E. NOMINAL 1-in.. DIAMETER (OR SMALLER) FLEXIBLE STEEL CONDUIT.

APPLICATION DETAILS

1. INSTALL THE FIRESTOP SYMMETRICALLY ON BOTH SIDES OF THE WALL ASSEMBLY.
2. ANNULAR SPACE REQUIREMENTS: 1/4 TO 3/8 in.
3. SLIDE ONE FS-195 WRAP/STRIP INTO THE OPENING, LEAVING A MAXIMUM 3/4 in. EXPOSED WRAP BEYOND THE WALL SUFACE. IF THE ANNULAR SPACE IS GREATER THAN 1/4 in. ADD ADDITIONAL WRAPS OF FS-195 WRAP/STRIP UNTIL ANNULAR SPACE IS LESS THAN 1/4 in. FS-195 WRAP/STRIPS MAY BE FRICTION FIT INTO THE OPENING OR SECURED WITH FOIL TAPE OR 16-GAUGE STEEL TIE WIRE.
4. APPLY A MINIMUM 1/4-in. DIAMETER CONTINUOUS BEAD OF CP 25 CAULK TO THE WRAP/STRIP/WALL INTERFACE AND TO THE EXPOSED EDGE OF THE WRAP/STRIP LAYER APPROXIMATELY 3/4 in. FROM THE WALL SURFACE.

E2-60

PENETRATION FIRESTOP DETAIL FOR 12" MAX. DIA. PIPE/CONDUIT THROUGH A FIRE-RATED GYPSUM WALLBOARD ASSEMBLY

Fresno Unified School District

FRESNO UNIFIED SCHOOL DISTRICT
MAINTENANCE DEPARTMENT
4600 N. BRAWLEY AVE. P: 559.457.3261
FRESNO, CA 93722 F: 559.457.3709

LOCAL AREA NETWORKS

VARIOUS SITES

SCALE:	N.T.S.
REVISION DATE:	02-23-07
SHEET #:	E2-60

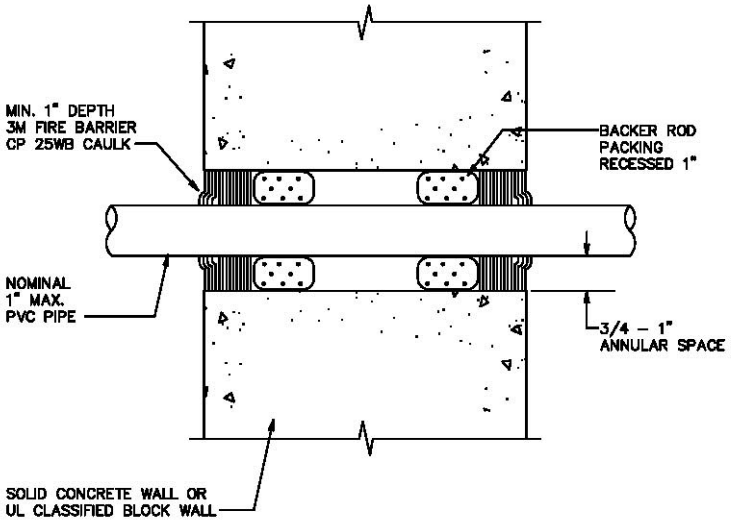

SYSTEM DETAILS

1. DRAWING NO. 5300–PPW71.01
2. SYSTEM JUSTIFICATION: UL THROUGH–PENETRATION FIRESTOP SYSTEM NO.562, PER ASTM E 814 (ANSI/UL 1479) FIRE TEST.
3. ASSEMBLY: MINIMUM THICKNESS OF SOLID CONCRETE WALL IS 4–1/2in. OR MAY BE CONSTRUCTED OF ANY UL CLASSIFIED CONCRETE FLOOR.
4. RATINGS: F – 3 hr., T – 1–1/2 hr.
5. PENETRATING ITEMS: NOMINAL 1–in. DIAMETER (OR SMALLER) SCH. 40 (OR HEAVIER) PVC PIPES IN CLOSED SYSTEMS.

APPLICATION DETAILS

1. INSTALL THE FIRESTOP SYSTEM SYMMETRICALLY ON BOTH SIDES OF THE WALL ASSEMBLY.
2. THE ANNULAR SPACE AROUND THE PVC PIPE IS TO BE 3/4 TO 1 in.
3. RECESS BACKEROD 1 in. FROM THE WALL SURFACE.
4. FILL THE ANNULAR SPACE TO A MINIMUM 1–in. DEPTH WITH 3M FIRE BARRIER CP 25WB CAULK.

E2-63 PENETRATION FIRESTOP DETAIL FOR 1" MAX. DIA. PVC PLASTIC THROUGH A CONCRETE OR MASONRY WALL

Fresno Unified School District	FRESNO UNIFIED SCHOOL DISTRICT MAINTENANCE DEPARTMENT 4600 N. BRAWLEY AVE. P: 559.457.3261 FRESNO, CA 93722 F: 559.457.3709	LOCAL AREA NETWORKS	SCALE:	N.T.S.
			REVISION DATE:	02-23-07
		VARIOUS SITES	SHEET #:	E2-63

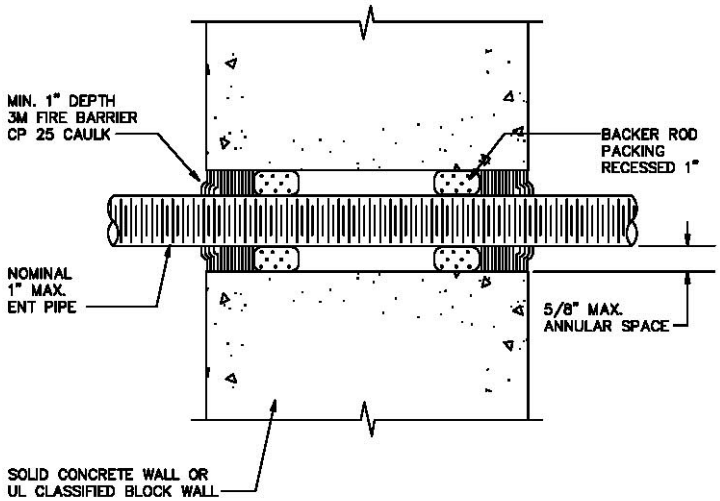

SYSTEM DETAILS

1. DRAWING NO. 5300–PPW71.02
2. SYSTEM JUSTIFICATION: UL THROUGH–PENETRATION FIRESTOP SYSTEM NO.564, CONFIGURATION B PER ASTM E 814 (ANSI/UL 1479) FIRE TEST.
3. ASSEMBLY: MINIMUM THICKNESS OF SOLID CONCRETE WALL IS 4–1/2in. OR MAY BE CONSTRUCTED OF ANY UL CLASSIFIED CONCRETE BLOCKS.
4. RATINGS: F – 2 hr., T – 2 hr.
5. PENETRATING ITEMS: NOMINAL 1–in. DIAMETER (OR SMALLER) ENT CONSTRUCTED OF POLYVINYL CHLORIDE. SOMETIMES REFERRED TO AS SMURF TUBING OR CONDUIT.

APPLICATION DETAILS

1. INSTALL THE FIRESTOP SYSTEM SYMMETRICALLY ON BOTH SIDES OF THE WALL ASSEMBLY.
2. THE ANNULAR SPACE AROUND THE ENT IS TO BE 1/2 TO 5/8 in.
3. RECESS PACKING MATERIAL, BACKEROD, FIBERGLASS INSULATION OR MINERAL WOOL SAFING, 1 in. FROM THE WALL SURFACE.
4. FILL THE ANNULAR SPACE TO A MINIMUM 1–in. DEPTH WITH 3M FIRE BARRIER CP–25 CAULK.

E2-64

PENETRATION FIRESTOP DETAIL FOR 1" MAX. DIA. ENT TUBING THROUGH A CONCRETE OR MASONRY WALL

Fresno Unified School District	FRESNO UNIFIED SCHOOL DISTRICT MAINTENANCE DEPARTMENT 4600 N. BRAWLEY AVE. P: 559.457.3261 FRESNO, CA 93722 F: 559.457.3709	LOCAL AREA NETWORKS	SCALE:	N.T.S.
			REVISION DATE:	02-23-07
		VARIOUS SITES	SHEET #:	E2-64

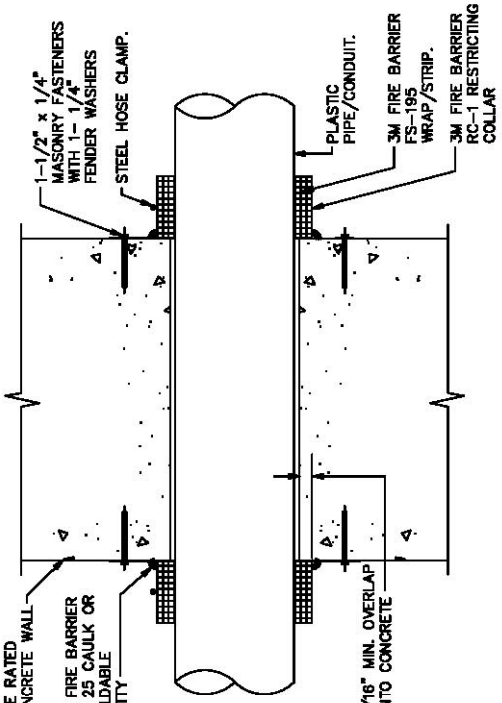

SYSTEM DETAILS

1. DRAWING NO. 5300-PPWS.01
2. SYSTEM JUSTIFICATION: UL THROUGH-PENETRATION FIRESTOP SYSTEM NO.64, CONFIGURATION A PER ASTM E 814 (ANSI/UL 1479) FIRE TEST.
3. ASSEMBLY: MINIMUM THICKNESS OF SOLID CONCRETE WALL IS 4-1/2in. OR MAY BE CONSTRUCTED OF ANY UL CLASSIFIED CONCRETE BLOCK.
4. RATINGS: F - 2 hr., T - 2 hr.
5. PENETRATING ITEMS:
   A. NOMINAL 4-IN. DIAMETER (OR SMALLER) SCH. 40 (OR HEAVIER) PVC PIPE IN CLOSED OR VENTED SYSTEMS.
   B. NOMINAL 4-IN. DIAMETER (OR SMALLER) SDR-17 (OR HEAVIER) CHLORINATED POLYVINYL CHLORIDE (CPVC) PIPE IN CLOSED OR VENTED SYSTEMS.
   C. NOMINAL 4-IN. DIAMETER (OR SMALLER) SCH. 40 (OR HEAVIER) SOLID-CORE ACRYLONITRILE BUTADIENE STYRENE (ABS) PIPES IN CLOSED OR VENTED SYSTEMS.

APPLICATION DETAILS

1. INSTALL THE FIRESTOP SYSTEM SYMMETRICALLY ON BOTH SIDES OF THE WALL ASSEMBLY.
2. AS AN ALTERNATIVE TO THE 3M FIRE BARRIER RC-1 RESTRICTING COLLAR AND FS-195 WRAP/STRIP ASSEMBLY THE 3M FIRE BARRIER PLASTIC PIPE DEVICE (PPD), UL FILE NO. R9289, MAY BE SUBSTITUTED.
3. SELECT PROPER NUMBER OF FS-195 WRAP/STRIPS OR PPD FOR NOMINAL PIPE SIZE YOU ARE USING FROM THE APPLICATION TABLE.

APPLICATION TABLE

NOMINAL PIPE DIAMETER INCHES	MINIMUM NO. OF FS-195 WRAP/STRIPS	PPD
1/2 TO 1	1	N/A
1.5	1	PPD 1-1/2"
2.0	1	PPD 2"
3.0	2	PPD 3"
4.0	3	PPD 4"

4. TIGHTLY WRAP THE PROPER NUMBER OF FS-195 WRAP/STRIPS AROUND THE PLASTIC PIPE FOIL SIDE OUT. SECURE WITH TAPE OR TIE WIRE. MAKE SURE FS-195 WRAP/STRIP OR PPD BUTTS SECURELY AGAINST THE CONCRETE WITH A 3/16 INCH MINIMUM OVERLAP OVER THE EDGE OF THE PENETRATING OPENING. WHEN USING MORE THAN ONE WRAP, STAGGER THE BUTTED SEAMS.
5. APPLY RC-1 RESTRICTING COLLAR. REMOVE ENOUGH RC-1 RESTRICTING COLLAR TO MAKE ONE LAP AROUND THE APPLIED FS-195 WRAP/STRIP WITH A MINIMUM 1 INCH OVERLAP. SLIP THE COLLAR OVER THE PIPE AT THE WALL AND SLIDE IT FLUSH WITH THE WALL SURFACE. WARNING: EDGES OF THE RC-1 RESTRICTING COLLAR ARE SHARP. HANDLE WITH CARE.
6. TIGHTLY SECURE THE RC-1 RESTRICTING COLLAR AROUND THE PIPE WITH A STEEL HOSE CLAMP CENTERED ON THE RC-1 RESTRICTING COLLAR ASSEMBLY. TWO BANDS OF 16-GAUGE STEEL TIE WIRE PLACED 1/2 INCH FROM THE ENDS OF THE RC-1 RESTRICTING COLLAR ASSEMBLY MAY BE USED INSTEAD OF THE HOSE CLAMP.
7. SECURE THE COLLAR TO THE WALL WITH 1/4 INCH x 1-1/2 INCH MASONRY FASTENERS. USE 1-1/4 INCH DIAMETER FENDER WASHERS ON THE MOUNTING TABS. FENDER WASHERS ARE NOT NEEDED WHEN USING THE PPD. FOR 3 INCH AND SMALLER PIPE SECURE A MINIMUM OF 3 MOUNTING SECURE A MINIMUM OF 4 MOUNTING TABS. SECURE ALL MOUNTING TABS ON THE PPD.
8. SEAL THE SYSTEM WITH A 1/4 INCH BEAD OF 3M FIRE BARRIER CP 25 CAULK OR MOLDABLE PUTTY AT THE CONCRETE AND COLLAR ASSEMBLY INTERFACE.

E2-65

PENETRATION FIRESTOP DETAIL FOR 4" MAX. DIA. ABS, CPVC, PVC PLASTIC THOUGH A CONCRETE MASONRY WALL

Fresno Unified School District

FRESNO UNIFIED SCHOOL DISTRICT
MAINTENANCE DEPARTMENT
4600 N. BRAWLEY AVE. FRESNO, CA 93722
P: 559.457.3261 F: 559.457.3709

LOCAL AREA NETWORKS

VARIOUS SITES

SCALE: N.T.S.
REVISION DATE: 02-23-07
SHEET #: E2-65

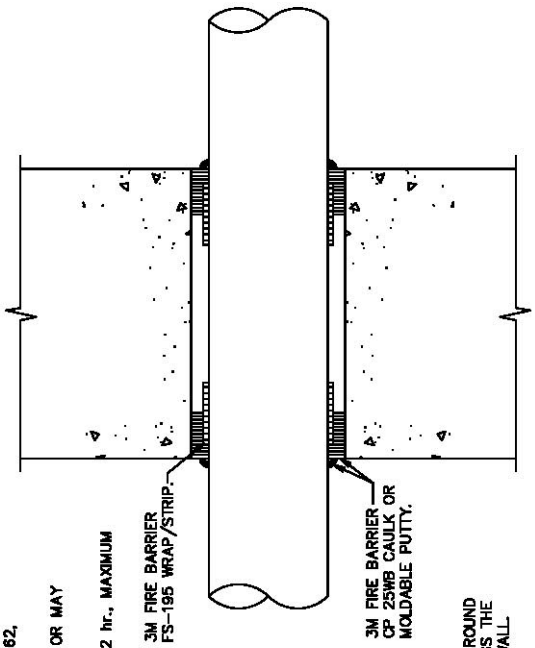

SYSTEM DETAILS

1. DRAWING NO. 5300-PPW71.02
2. SYSTEM JUSTIFICATION: UL THROUGH-PENETRATION FIRESTOP SYSTEM NO.562, PER ASTM E 814 (ANSI/UL 1479) FIRE TEST.
3. ASSEMBLY: MINIMUM THICKNESS OF SOLID CONCRETE WALL IS 4-1/2 in. OR MAY CONSTRUCTED OF ANY UL CLASSIFIED CONCRETE BLOCKS.
4. RATINGS: F - 2 hr., T - 0 hr., MAXIMUM 2-in. PVC PIPE VENTED; T - 2 hr., MAXIMUM MAXIMUM 1-in. PP, 2-in. PB AND PVC CLOSED.
5. PENETRATING ITEMS:
   A. NOMINAL 2-in. DIAMETER (OR SMALLER) SCH. 40 (OR HEAVIER) PVC PIPES IN CLOSED OR VENTED SYSTEMS.
   B. NOMINAL 2-IN. DIAMETER (OR SMALLER) SDR-17 (OR HEAVIER) PB PIPES IN CLOSED SYSTEMS.
   C. NOMINAL 1-IN. DIAMETER (OR SMALLER) SCH. 40 (OR HEAVIER) PP PIPES IN CLOSED SYSTEMS.

APPLICATION DETAILS

1. INSTALL THE FIRESTOP SYSTEM SYMMETRICALLY ON BOTH SIDES OF THE WALL ASSEMBLY.
2. SELECT THE PROPER NUMBER OF 3M FIRE BARRIER FS-195 WRAP/STRIP AROUND THE PLASTIC PIPE, FOIL SIDE OUT. SECURE WITH TAPE OR TIE WIRE. RECESS THE FS-195 WRAP/STRIP 1/4 in. INTO THE OPENING ON BOTH SIDES OF THE WALL.

APPLICATION TABLE

PIPE DIAMETER (INCHES)	PIPE TYPE	ANNULAR SPACE (INCHES)	PIPING SYSTEM	NO. OF FS-195 WRAP/STRIPS
1/2 - 2	PVC	1/2 - 7/8	VENTED	2
1/2 - 2	PB, PVC	1/4 - 5/8	CLOSED	1
1/2 - 1	PP	1/4 - 5/8	CLOSED	1

3. TIGHTLY WRAP THE PROPER NUMBER OF FS-195 WRAP/STRIP AROUND THEPLASTIC PIPE, FOIL SIDE OUT. SECURE WITH TAPE OR TIE WIRE. RECESS THE FS-195 WRAP/STRIP 1/4 in. INTO THE OPENING ON BOTH SIDES OF THE WALL.
4. CAULK THE ANNULAR SPACE AROUND THE APPLIED FS-195 WRAP/STRIP TO THE MAXIMUM EXTENT POSSIBLE AND APPLY A 1/4- in. DEPTH OF 3M FIRE BARRIER CP-25 CAULK TO THE OUTSIDE EDGE OF THE FS-195 WRAP/STRIP.

E2-66 PENETRATION FIRESTOP DETAIL FOR VARIOUS PLASTIC TYPES THROUGH A CONCRETE OR MASONRY WALL

Fresno Unified School District

FRESNO UNIFIED SCHOOL DISTRICT
MAINTENANCE DEPARTMENT
4600 N. BRAWLEY AVE. P: 559.457.3261
FRESNO, CA 93722 F: 559.457.3709

LOCAL AREA NETWORKS

VARIOUS SITES

SCALE: N.T.S.
REVISION DATE: 02-23-07
SHEET #: E2-66

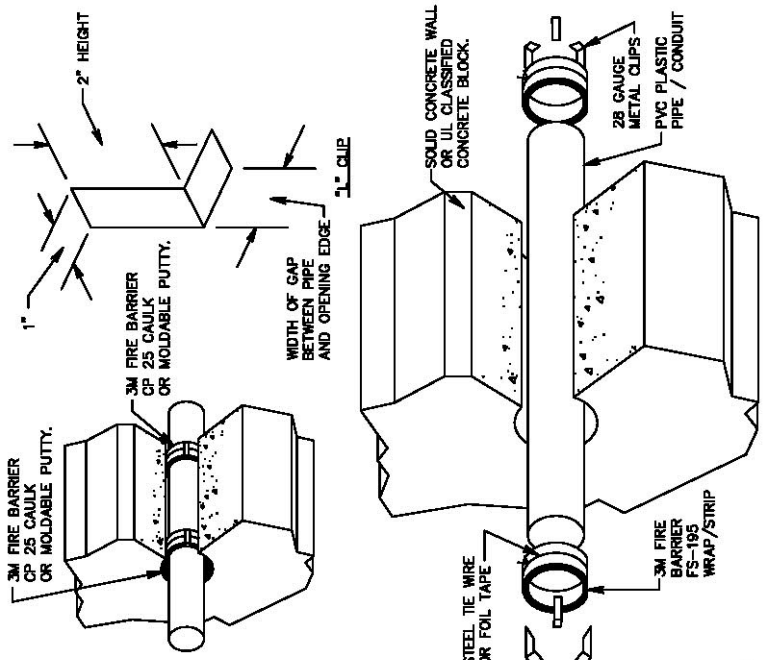

SYSTEM DETAILS

1. DRAWING NO. 5300-PPW6.07
2. SYSTEM JUSTIFICATION: UL THROUGH-PENETRATION FIRESTOP SYSTEM NO.64 CONFIGURATION B, PER ASTM E 814 (ANSI/UL 1479) FIRE TEST.
3. ASSEMBLY: MINIMUM THICKNESS OF SOLID CONCRETE WALL IS 4-1/2 in. OR MAY CONSTRUCTED OF ANY UL CLASSIFIED CONCRETE BLOCKS.
4. RATINGS: F - 2 hr., T - 2 hr.
5. PENETRATING ITEMS: NOMINAL 4 IN. DIAMETER (OR SMALLER) SCH. 40 (OR HEAVIER) PVC PIPES IN CLOSED OR VENTED SYSTEMS. PVC PIPE MAY BE OFF CENTER OR AT POINT CONTACT.

APPLICATION DETAILS

1. INSTALL THE FIRESTOP SYSTEM SYMMETRICALLY ON BOTH SIDES OF THE WALL ASSEMBLY.
2. THE INSIDE DIAMETER OF THE THROUGH OPENING MUST BE 1.3 TO 1.5 TIMES LARGER THAN OUTSIDE DIAMETER OF THE PIPE.
3. THE ANNULAR SPACE BETWEEN THE PIPE AND THE SIDES OF THE OPENING AT THE OUTSIDE 2 INCHES OF THE OPENING IS TO BE COMPLETELY FILLED WITH 3M FIRE BARRIER FS-195 WRAP/STRIP LAYERS FOLLOWING THE CONTOUR OF THE PIPE.
4. MINIMUM 28 GAUGE "L" CLIPS ARE TO BE USED WHEN INSTALLING SYSTEM. CLIPS TO BE 2 INCHES HIGH, 1 INCH WIDE AND OF SUFFICIENT LENGTH TO SPAN THE ANNULAR SPACE. A MINIMUM OF THREE CLIPS SYMMETRICALLY LOCATED ARE REQUIRED. CLIPS ARE NOT REQUIRED ON NOMINAL 2 INCH AND SMALLER PIPE WHEN THE ANNULAR SPACE IS 3/8 INCH OR LESS.
5. PRIOR TO THE INSTALLATION OF THE CLIPS APPLY A 1/4 INCH BEAD OF 3M FIRE BARRIER CP 25 CAULK TO THE INSIDE OF THE OPENING APPROXIMATELY 1 INCH FROM THE WALL SURFACE. NOTE: WHEN USING CP 25N/S CAULK ON PRESSURIZED PIPE PLACE A WRAP OF FOIL TAPE IN THE CAULK CONTACT AREA. NO FOIL BARRIER IS NECESSARY WHEN USING CP 25WB CAULK OR MOLDABLE PUTTY.
6. TIGHTLY WRAP THE PROPER NUMBER OF FS-195 WRAP/STRIP AROUND THE PLASTIC PIPE FOIL SIDE OUT. SECURE WITH TAPE OR TIE WIRE. IF MORE THAN ONE FS-195 WRAP/STRIP IS NEEDED STAGGER THE BUTTED SEAMS. SECURE CLIPS TO OUTERMOST FS-195 WRAP/STRIP PRIOR TO INSERTION INTO OPENING. SLIDE ASSEMBLY INTO OPENING FLUSH WITH THE WALL SURFACE.
7. APPLY A 1/8 INCH TO 1/4 INCH THICK COATING OF CP 25 CAULK TO THE TOP OR BOTTOM EDGES OF THE FS-195 WRAP/STRIP AND SEAL ALL GAPS AT THE FS-195 WRAP/STRIP CONCRETE INTERFACE.

E2-67 PENETRATION FIRESTOP DETAIL FOR 4" MAX. DIA. PVC PLASTIC PIPE/CONDUIT THROUGH A CONCRETE OR MASONRY WALL

Fresno Unified School District	FRESNO UNIFIED SCHOOL DISTRICT MAINTENANCE DEPARTMENT 4600 N. BRAWLEY AVE. P: 559.457.3261 FRESNO, CA 93722 F: 559.457.3709	LOCAL AREA NETWORKS VARIOUS SITES	SCALE: N.T.S. REVISION DATE: 02-23-07 SHEET #: E2-67

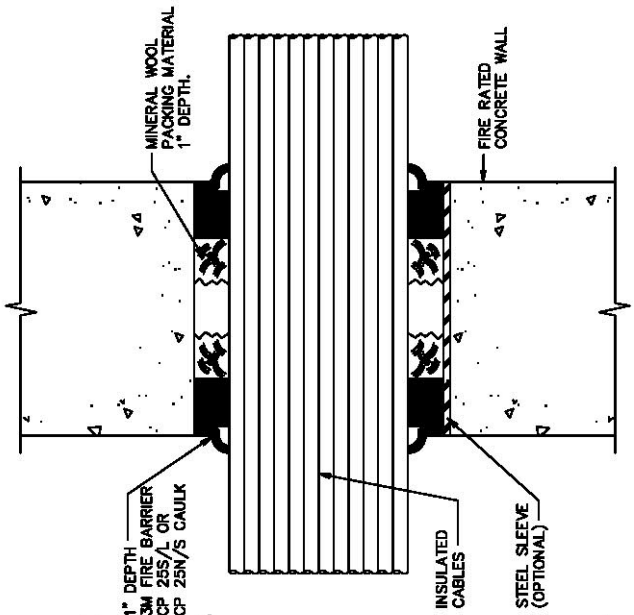

SYSTEM DETAILS

1. DRAWING NO. 5300-ICW1.01
2. SYSTEM JUSTIFICATION: UL THROUGH-PENETRATION FIRESTOP SYSTEM NO.33 PER ASTM E 814 (ANSI/UL 1479) FIRE TEST.
3. ASSEMBLY: MINIMUM 4-1/2 in. THICK, SOLID LIGHTWEIGHT OR NORMAL WEIGHT CONCRETE WALL. WALL ASSEMBLY MAY ALSO BE CONSTRUCTED OF ANY UL CLASSIFIED CONCRETE BLOCKS. MAXIMUM OPENING SIZE: 8-1/4 in. OPTIONAL SLEEVE SIZE: 4-in. DIAMETER.
4. RATINGS: SEE TABLE BELOW.
5. PENETRATING ITEMS: MAXIMUM 500 MCM - SINGLE CONDUCTOR POWER CABLE, MAXIMUM 3/0 AWG. - MULTI-CONDUCTOR POWER/CONTROL CABLE, MAXIMUM 100 PAIR TELEPHONE CABLE. JACKET/INSULATION: XLPE, PVC, NEOPRENE RUBBER, HYPALON, OR SILICONE RUBBER. CONDUCTOR TYPE: COPPER OR ALUMINUM.

RATINGS TABLE

OPENING DIA.	PERCENT FILL	CAULK DEPTH	F RATING	T RATING	NOTES
2"	0	1"	3	2	BLANK
2"	56% MAX.	1/2"	2	1	MAX. 12 AWG
2"	56% MAX.	1/2"	2	0	
4"	4% - 56%	1"	3	0	SLEEVED
6"	10% - 44%	1"	3	0	
6"	20% - 36%	1"	3	0	

APPLICATION DETAILS

1. INSTALL THE FIRESTOP SYSTEM SYMMETRICALLY TO BOTH SIDES OF THE WALL
2. RECESS A MINIMUM 1 in. THICKNESS OF MINERAL WOOL (OR EQUIVALENT) PACKING MATERIAL INTO THE OPENING, AND AROUND INDIVIDUAL CABLES IF POSSIBLE, TO PREVENT LEAKAGE OF CAULK PRIOR TO CURE.
3. INSTALL 3M FIRE BARRIER CP 25N/S OR CP 255/L CAULK INTO THE OPENING TO THE APPROPRIATE DEPTH PER RATINGS TABLE ABOVE. WHEN POSSIBLE, INSTALL 3M FIRE BARRIER CAULK BETWEEN CABLES IN BUNDLE FOR IMPROVED SMOKE SEAL.

E2-68 PENETRATION FIRESTOP FOR INSULATED CABLES THROUGH A CONCRETE WALL W/ STEEL SLEEVE OPTIONAL

Fresno Unified School District	FRESNO UNIFIED SCHOOL DISTRICT MAINTENANCE DEPARTMENT 4600 N. BRAWLEY AVE. FRESNO, CA 93722 P: 559.457.3261 F: 559.457.3709	LOCAL AREA NETWORKS VARIOUS SITES	SCALE: N.T.S. REVISION DATE: 02-23-07 SHEET #: E2-68

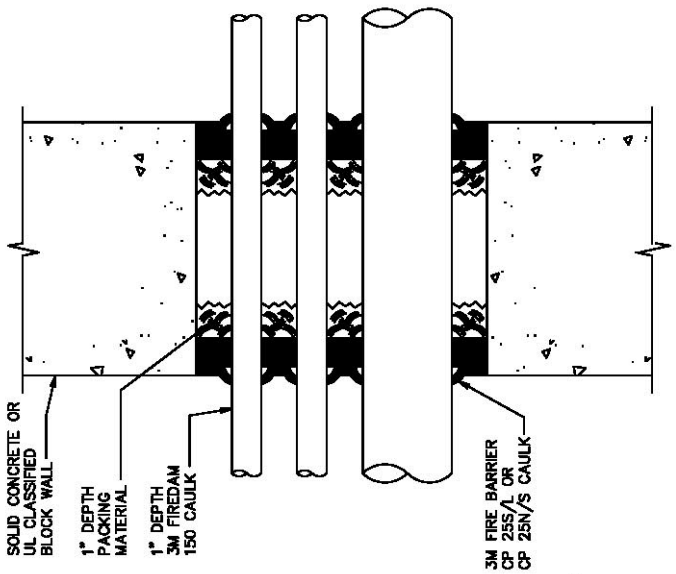

SYSTEM DETAILS

1. DRAWING NO. 5300–MPW36.01
2. SYSTEM JUSTIFICATION: UL THROUGH–PENETRATION FIRESTOP SYSTEM NO. 170 PER ASTM E 814 (ANSI/UL 1479) FIRE TEST.
3. ASSEMBLY: MINIMUM THICKNESS OF SOLID CONCRETE WALL IS 4–1/2 in., OR MAY BE CONSTRUCTED OF ANY UL CLASSIFIED CONCRETE BLOCKS.
4. RATINGS: F – 3 hr., T – 0 – 1 1/2 hr., WHEN NOMINAL 1–in. DIAMETER (OR SMALLER) STEEL PIPE, STEEL CONDUIT OR STEEL EMT IS USED THE "T" RATING IS 1 1/2 hr.
5. PENETRATING ITEMS:
   A. NOMINAL 3–in. DIAMETER (OR SMALLER) SCH. 5S (OR HEAVIER) STEEL PIPE,
   B. NOMINAL 3–in. DIAMETER (OR SMALLER) STEEL CONDUIT,
   C. NOMINAL 3–in. DIAMETER (OR SMALLER) STEEL EMT CONDUIT.
   D. NOMINAL 3–in. DIAMETER (OR SMALLER) COPPER PIPE.

APPLICATION DETAILS

1. INSTALL THE FIRESTOP SYSTEM SYMMETRICALLY TO BOTH SIDES OF THE WALL ASSEMBLY.
2. MAXIMUM AREA OF THROUGH–OPENING NOT TO EXCEED 144 sq. in. WITH A MAXIMUM DIMENSION OF 12.
3. METAL PIPES AND / OR CONDUITS TO BE INSTALLED WITH A MINIMUM CLEARANCE OF 1 in. TO ADJACENT PIPES / CONDUITS AND TO THE PERIMETER OF THE THROUGH–OPENING.
4. RECESS A NOMINAL 1–1/2 in. THICKNESS OF 4 pcf. MINERAL WOOL SAFING, 1 in. FROM THE SURFACE OF THE FLOOR.
5. FILL THE ANNULAR SPACE AROUND THE PIPE WITH A MINIMUM 1–in. DEPTH OF 3M FIREDAM 150 CAULK.
6. APPLY AN ADDITIONAL BEAD OF CAULK AROUND PERIMETER OF THROUGH–OPENING LAPPING 1/4 TO 1/2 in. ONTO THE WALL.

E2-69 PENETRATION FIRESTOP DETAIL FOR MUTLIPLE METAL PIPE THROUGH FIRE-RATED CONCRETE OR MASONRY WALL.

Fresno Unified School District

FRESNO UNIFIED SCHOOL DISTRICT
MAINTENANCE DEPARTMENT
4600 N. BRAWLEY AVE. P: 559.457.3261
FRESNO, CA 93722 F: 559.457.3709

LOCAL AREA NETWORKS
VARIOUS SITES

SCALE: N.T.S.
REVISION DATE: 02-23-07
SHEET #: E2-69

3.13 EXTERNAL ANTENNA/ROOF TOP CONDUIT:

A. External Antenna/Roof Top Conduit shall be grounded in accordance with ANSI/TIA/EIA-607-1994 standards and any applicable electrical and fire codes.

B. Installation shall be done in accordance with all local, state and federal laws and regulations.

C. Conduit on roofs shall be Galvanized Rigid Steel (GRC).

D. Caulk around all exterior Junction Boxes to prevent water from entering building and/or box.

E. Caulk around all couplings/nipples between buildings.

F. Installation of all materials shall be aesthetically pleasing and integrate into existing building architecture as much as is possible.

G. Refer to the following diagrams in Section 16700 for approved District installation guidelines of External Antenna/Roof Top Conduit.
   1. DETAIL TN_BUR_01: "PIPE PENETRATION (BUR) (RETROFIT PROCEDURE)".
   2. DETAIL TN_BUR_02: "CONDUIT BLOCKING (POLYURETHANE FOAM) (LIGHTWEIGHT SYSTEM)".
   3. DETAIL TN_BUR_03:"ROOF PLATFORM ANTENNA (BUR) (RETROFIT)".
   4. DETAIL TN_BUR_04: "ANTENNA BLOCK (BUR) (RETROFIT)".
   5. DETAIL TN_FGS_01: "ROOF JACK FOR VENT PIPES".
   6. DETAIL TN_FGS_02: "BLOCKING FOR CONDUITS".
   7. DETAIL TN_FGS_03: "ROOF PLATFORM ANTENNA".
   8. DETAIL TN_FGS_04: "ANTENNA GUYWIRE BLOCK".
   9. DETAIL TN_SPF_01: "CONDUIT BLOCKING (LIGHTWEIGHT SYSTEM)".
   10. DETAIL TN_SPF_02: "CONDUIT BLOCKING (POLYURETHANE FOAM) (RETROFIT HEAVYWEIGHT SYSTEM)".
   11. DETAIL TN_SPF_03: "PIPE PENETRATION (POLYURETHANE FOAM) (RETROFIT PROCEDURE)".

Fresno Unified School District

ROOFING SYSTEM: BUILTUP ROOFING (BUR)

DETAIL TN_BUR_01: PIPE PENETRATION

(RETROFIT PROCEDURE)

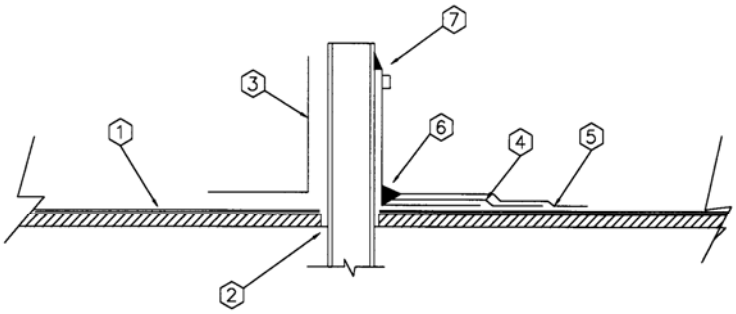

SCOPE OF WORK

1. Cut hole through deck and BUR. Install pipe to extend minimum of 8" above deck
2. Provide 4# lead jack (or 20 oz. copper)

DISTRICT RESPONSIBILITIES:

1. Clean and prime deck area to receive new jack
2. Install jack. Primer both sides. Set in mastic.
   a. do not use fasteners
   b. Mount directly to deck if insulation > 1/2")
3. Install 1 layer of 50# SBS ply sheet set in mastic. Extend 4" or more onto BUR.
4. Install 1 layer of 102# SBS mineral cap sheet set in mastic. Extend 2" or more beyond ply sheet.
5. Seal around base of pipe and plies using urethane caulk (Vulkem 116 or equal) Taper to 1/2"
6. Install hose clamp and urethane caulk at reglet

PLANNING & ESTIMATING DEPARTMENT			
4600 N. BRAWLEY AVE.	PHONE: 559-457-3046	DRAWN BY: MF	Not to scale
FRESNO, CA. 93722	FAX: 559-457-3059	DATE: 10/25/00	file:TN_BUR_01_Penetrations

Fresno Unified School District

ROOFING SYSTEM: BUILTUP ROOFING (BUR)

DETAIL TN_BUR_03: ROOF PLATFORM_ANTENNA

(Retrofit)

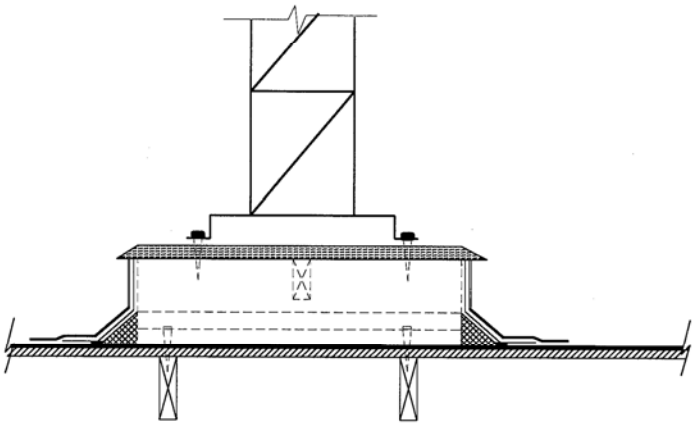

SCOPE OF WORK

1. Fabricate 2x10 platform 30" x 30"
2. Install A35 Simpson clips to corners and 2x4 cleats--bot. 2 sides & top support
3. Install 4 lag screws (3/8" x 5") thru 2x4 cleats into structural member below deck
4. Install 2 layers 3/4" plywood cap. Fasten w/1-1/2" screws @ 6" o.c. each layer

* 5. Clean and prime (E) BUR approx. 12" beyond platform. Install 4" cant

NOTE: BUR SYSTEM MUST BE CUT & PLATFORM ATTACHED TO DECK IF INSULATION > 1/2" THICK

* 6. Install one layer 50# base sheet from the top of curb to 3" beyond toe of cant. Fully adhere base sheet in mastic

* 7. Install one layer 102# SBS cap sheet from top of curb to 6" beyond toe of cant. Fully adhere cap sheet in mastic.

* 8. Three-course corners of curb with elastomeric mastic and reinforcing fiberglass webbing

* 9. Apply surface coating to match (E) roof system. (NOTE: White reflective coatings require min. 30 day flash time)

10. Install 40# Ruftak vapor barrier and 24 gage galv. cap w/2-1/2" lip @ 45 degrees
11. Install antenna base using 1/4" x 2" lag screws, neoprene washers & polyurethane caulk
12. Guywire blocks: 3 required for 20 ft. mast. Refer to Detail R12

* DISTRICT RESPONSIBILITIES:

1. Items 5 thru 9
2. District will furnish 20 ft. mast

PLANNING & ESTIMATING DEPARTMENT			
4600 N. BRAWLEY AVE.	PHONE: 559-457-3046	DRAWN BY: MF	NOT TO SCALE
FRESNO, CA. 93722	FAX: 559-457-3059	DATE: 10/25/00	file: TN_BUR_03_ANTENNA

Fresno Unified School District

ROOFING SYSTEM: BUILTUP ROOFING (BUR)

DETAIL TN_BUR_04: ANTENNA BLOCK
(Retrofit)

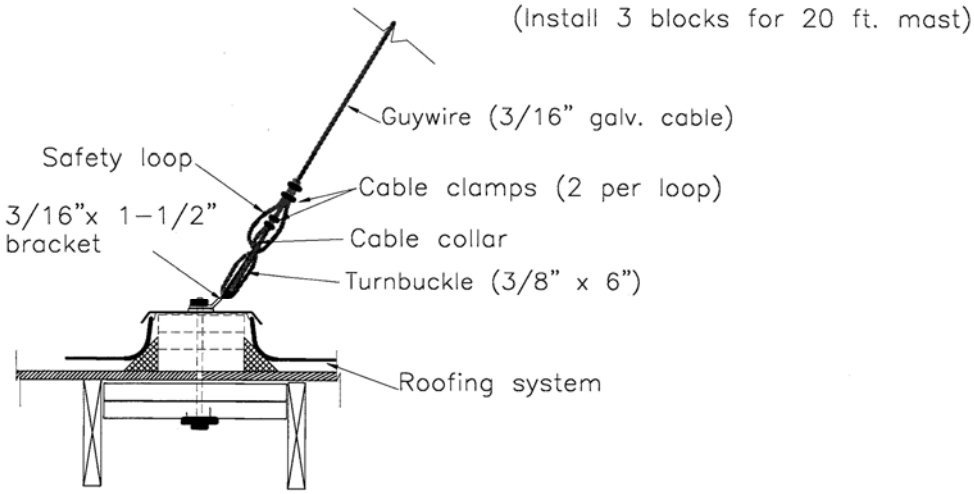

NOTES:

1. Locate 3 anchor points approx. 20 to 30 feet from mast
2. Cut deck to install double 2x6 blocking. Nail thru rafters w/3-16d per 2x6.
3. Install 1/2" bolt thru blocking & repaired deck. Attach to bottom block w/welded plate & screws.
4. Install triple-layer 2x8 block w/8d toenails into deck
5. Install 1 piece 24-ga. gi. jack with soldered joints.
6. Vapor barrier: 40#self-adhering Ruftak. Lap 1"over jack.
7. Cap: 24 ga. g.i. w/2-1/2" lip @45 and soldered corners
8. Install bracket and nut w/ neoprene washer and polyurethane caulk
9. Install cable and clamps per above detail

DISTRICT RESPONSIBILITIES:

1. Remove (E) roof system and patch per Detail R11 (items 6-9)

PLANNING & ESTIMATING DEPARTMENT			
4600 N. BRAWLEY AVE.	PHONE: 559-457-3046	DRAWN BY: MF	NOT TO SCALE
FRESNO, CA. 93722	FAX: 559-457-3059	DATE: 10/25/00	file: TN_BUR_04_ANT. BLOCK

Fresno Unified School District

ROOFING SYSTEM: FIBERGLASS SHINGLES

DETAIL TN_FGS_03: ROOF PLATFORM_ANTENNA

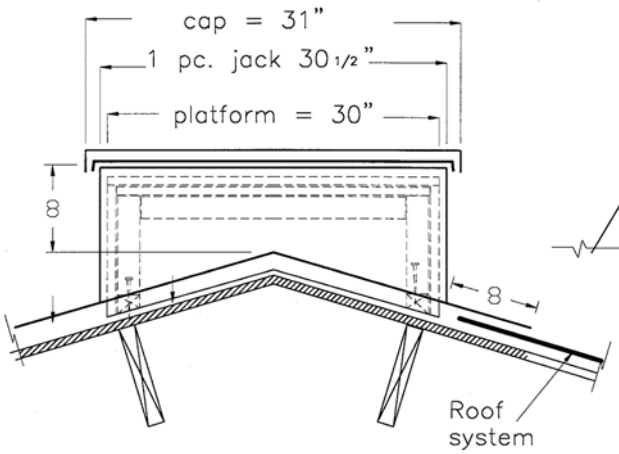

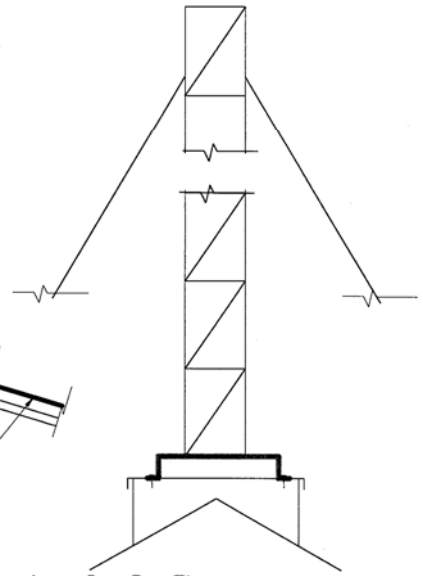

NOTES:

1. Sides: 3/4" ext. plywood
2. Cleats: Re-inforce all lap joints using 2x D. Fir
3. Fasten platform to deck & rafter w/6 lag screws 1/4" x 4"
4. Plywood cap: 2 layers 3/4" plywood.
   Fasten each layer w/ 1-1/2" screws @ 6" o.c.
5. Jack: 1 pc. 24 ga. g.i. soldered corners w/hem on slope sides
6. Vapor barrier: 40# self-adhering Ruftak. Lap 1" over jack
7. Cap: 24 ga. g.i. w/2" lip and soldered corners
8. Antenna base: Install w/ 3/8" x 2" lag screws w/ neoprene washers and polyurethane caulk

DISTRICT RESPONSIBILITIES:

1. Remove (E) roof system as needed.
2. Patch in roof system per FUSD specifications
3. District will furnish 20' mast

PLANNING & ESTIMATING DEPARTMENT			
4600 N. BRAWLEY AVE.	PHONE: 559-457-3046	DRAWN BY: MF	NOT TO SCALE
FRESNO, CA. 93722	FAX: 559-457-3059	DATE: 10/25/00	file: TN_FGS_03_ANTENNA

ROOFING SYSTEM: BUILT UP ROOFING (BUR)

DETAIL TN_BUR_02: CONDUIT BLOCKING (HD 12")

Fresno Unified School District

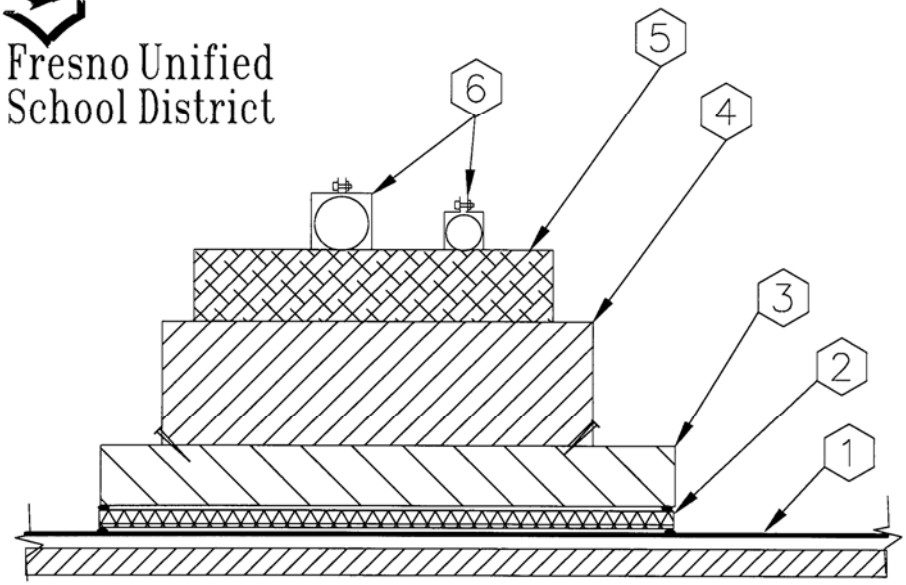

NOTES:

1. BUR roofing system
2. Sphagetti walkpad set in spot–applied Polyurethane caulk
3. 2x8x16" treated D. Fir (spot–applied caulk to pad)
4. 4x4 x12" treated D. Fir (toe–nailed to 2 x 8)
5. Unistrut bracket secured to block
6. Rigid Conduit: (Maximum Load):
   a. 2" or smaller –– two conduits per block
7. Spacing: Job specific
   a. Typically not to exceed 60" o.c.
   b. Not to exceed 24" from conduit joint

PLANNING & ESTIMATING DEPARTMENT			
4600 N. BRAWLEY AVE.	PHONE: 559–457–3046	DRAWN BY: MF	Not To Scale
FRESNO, CA. 93722	FAX: 559–457–3059	DATE: 11/03/00	file:TN_BUR_02_ Blocking_LWGT

Fresno Unified School District

ROOFING SYSTEM: FIBERGLASS SHINGLES

DETAIL TN_FGS_02: BLOCKING FOR CONDUITS

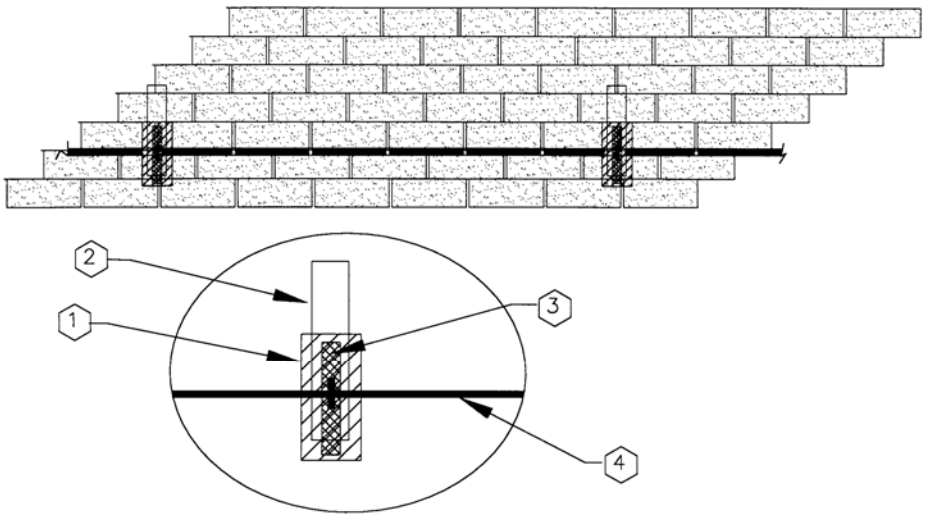

NOTES

1. Block size: job specific (minimum 2" x 4" x 8")
2. 24 gage galvanized metal strap
   a. Attach with screws to bottom of block
   b. Attach to deck with shingle nails under shingle tab
3. Unistrut attached to block
4. Rigid conduit : (Max Load: 2" or greater,one per block: Less than 2", 2 per block)
5. Spacing: job specific (typically not to exceed 60" o.c.)

PLANNING & ESTIMATING DEPARTMENT			
4600 N. BRAWLEY AVE.	PHONE: 559-457-3046	DRAWN BY: MF	Not to Scale
FRESNO, CA. 93722	FAX: 559-457-3059	DATE: 10/25/00	file: TN_FGS_02_Blocking

Fresno Unified School District

ROOFING SYSTEM: FIBERGLASS SHINGLES

DETAIL:TN_FGS_01 ROOF JACK FOR VENT PIPES

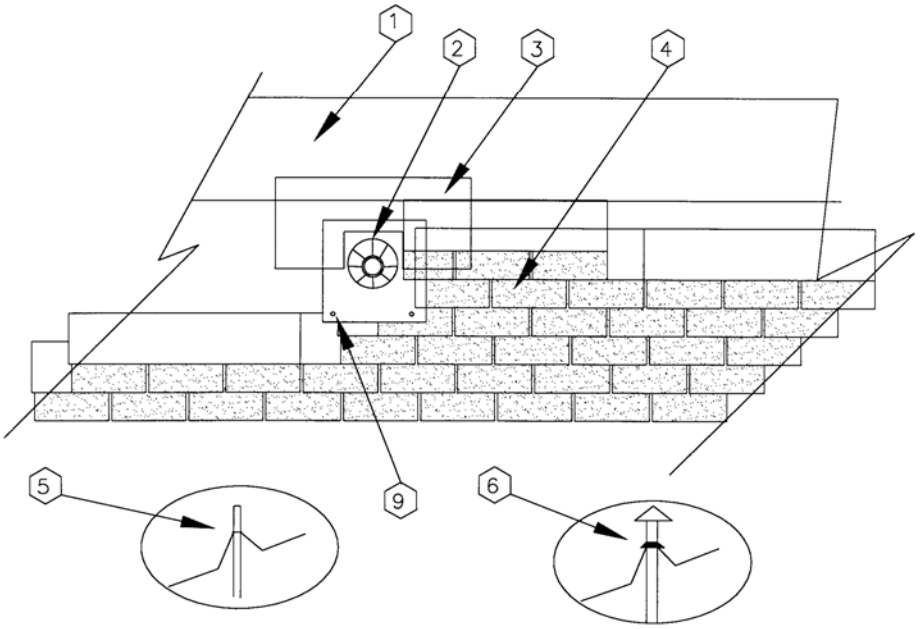

NOTES

1. SBS modified fiberglass–reinforced underlayment
2. Galvanized deck jack
3. Underlayment slip sheet installed with mastic to jack
4. SBS modified fiberglass shingles
5. Apply urethane caulk (Vulkem 116 or NP1)
6. Galvanized vents require storm collar
7. Jacks which require cutting must be field–soldered 4# lead
8. Multiple jacks: Maintain minimum 12" between deck flanges
9. Exposed flange: Fasten with pointed screws & neoprene washers @ 12" o.c.

Note: District will remove and patch roof systems as needed.

PLANNING & ESTIMATING DEPARTMENT			
4600 N. BRAWLEY AVE.	PHONE: 559–457–3046	DRAWN BY: MF	Not to Scale
FRESNO, CA. 93722	FAX: 559–457–3059	DATE: 10/25/00	file: TN_FGS_01_VENT

ROOFING SYSTEM: FIBERGLASS SHINGLES

Fresno Unified School District

DETAIL TN_FGS_04: Antenna Guywire Block
(Install 3 for 20 ft. mast)

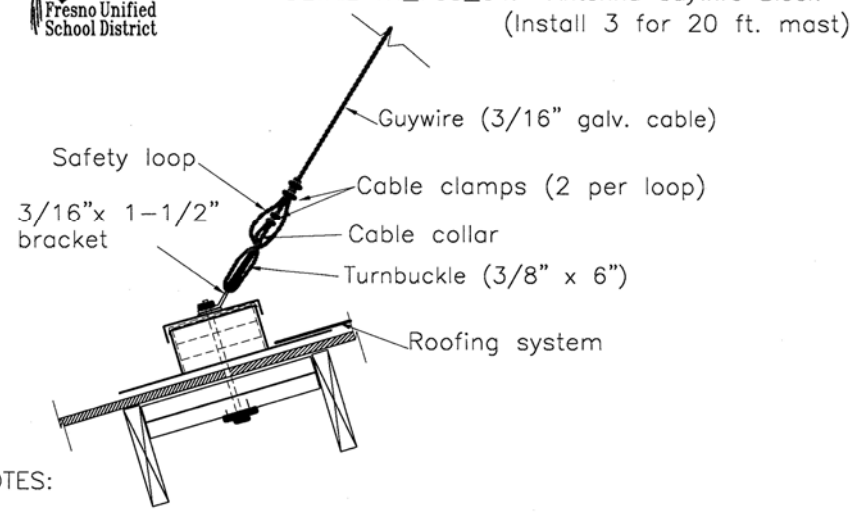

NOTES:

1. Locate 3 anchor points approx. 20 to 30 feet from mast
2. Cut deck to install double 2x6 blocking. Nail thru rafters w/3-16d per 2x6.
3. Install 1/2" bolt thru blocking & repaired deck. Attach to bottom block w/welded plate & screws.
4. Install triple-layer 2x8 block w/8d toenails into deck.
5. Install 1 pc. 24 ga. g.i. jack w/ soldered joints.
6. Vapor barrier: 40# self-adhering Ruftak. Lap 1" over jack
7. Cap: 24 ga. g.i. w/2" lip and soldered corners
8. Install bracket and nut w/ neoprene washer and polyurethane caulk
9. Install cable & clamps per drawing detail

DISTRICT RESPONSIBILITIES:

1. Remove (E) roof system as needed.
2. Patch in roof system per FUSD specifications

PLANNING & ESTIMATING DEPARTMENT			
4600 N. BRAWLEY AVE.	PHONE: 559-457-3046	DRAWN BY: MF	NOT TO SCALE
FRESNO, CA. 93722	FAX: 559-457-3059	DATE: 10/25/00	file: TN_FGS_04_ANT. BLOCK

ROOFING SYSTEM: SPRAYED POLYURETHANE FOAM

DETAIL TN_SPF_01: CONDUIT BLOCKING
(lightweight system)

Fresno Unified School District

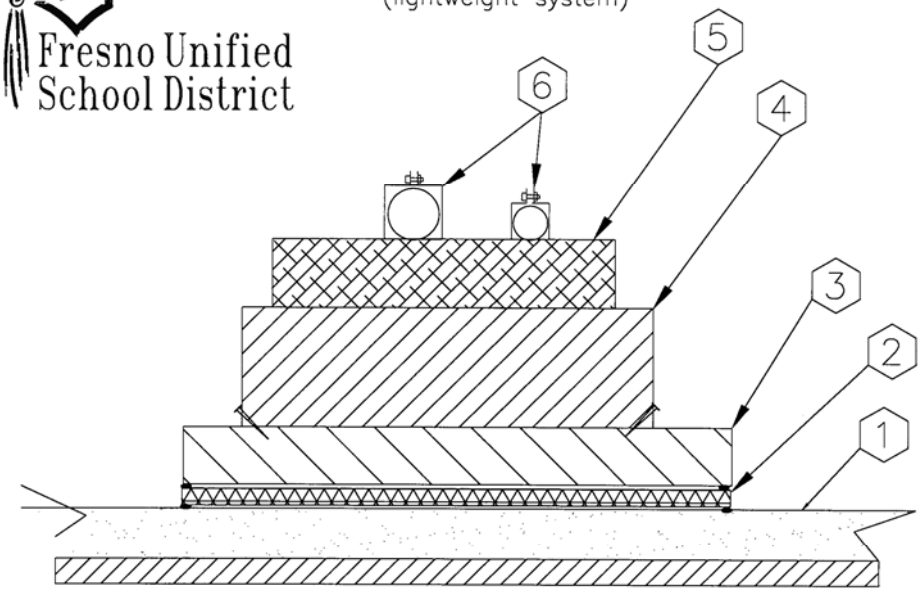

NOTES:
1. Foam and coating system
2. Sphagetti walkpad set in spot–applied Polyurethane caulk
3. 2x8x16" treated D. Fir (spot–applied caulk to pad)
3. 4x4x12" treated D. Fir (spot–applied caulk to pad)
5. Unistrut bracket secured to block
6. Rigid Conduit: (Maximum Load)
   a. 2" dia. or greater -- max. one conduit per block
   b. Less than 2" dia. -- max. 2 conduits per block
7. Spacing: Job specific
   a. Typically not to exceed 60" o.c.
   b. Not to exceed 24" from conduit joint

PLANNING & ESTIMATING DEPARTMENT			
4600 N. BRAWLEY AVE.	PHONE: 559–457–3046	DRAWN BY: MF	Not to Scale
FRESNO, CA. 93722	FAX: 559–457–3059	DATE: 10/25/00	file: TN_SPF_01_Blocking

ROOFING SYSTEM: SPRAYED POLYURETHANE FOAM

DETAIL TN_SPF_02: CONDUIT BLOCKING

(Retro–fit Heavyweight System)

Fresno Unified School District

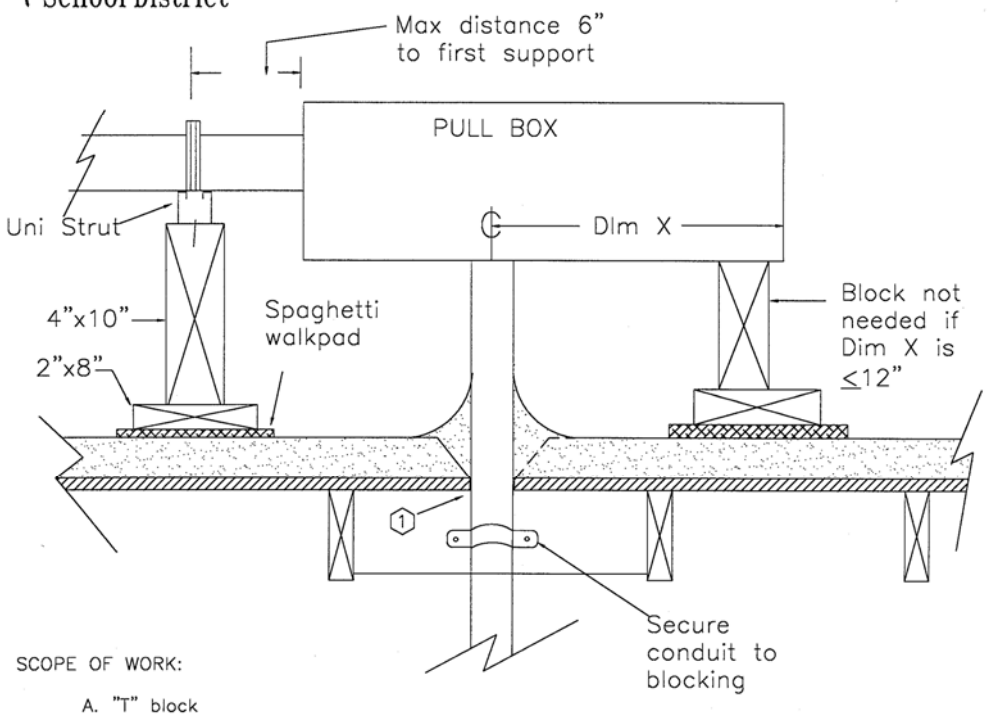

SCOPE OF WORK:

A. "T" block
1. Toe–nail 4x10x24" block to 2x8x24" block using 6–8d galv. nails
2. Install "T–blocks" and walkpad over foam roof system
3. Spot–apply polyurethane caulk
   a. T–block to spaghetti walkpad
   b. Walkpad to SPF system
4. Fasten Unistrut bracket to block
5. Rigid Conduit: (Maximum Load –– 4 conduits 2" or smaller)

B. Block spacing: Job specific
1. Typically not to exceed 60" o.c.
2. Not to exceed 24" from conduit joint

C. Penetrations: Refer to Detail R6

PLANNING & ESTIMATING DEPARTMENT			
4600 N. BRAWLEY AVE.	PHONE: 559–457–3046	DRAWN BY: MF	SCALE: Not to Scale
FRESNO, CA. 93722	FAX: 559–457–3059	DATE: 10/25/2000	file:TN_SPF_02_Blocking

Fresno Unified School District

ROOFING SYSTEM: SPRAYED POLYURETHANE FOAM

DETAIL TN_SPF_03: PIPE PENETRATION

(RETROFIT PROCEDURE)

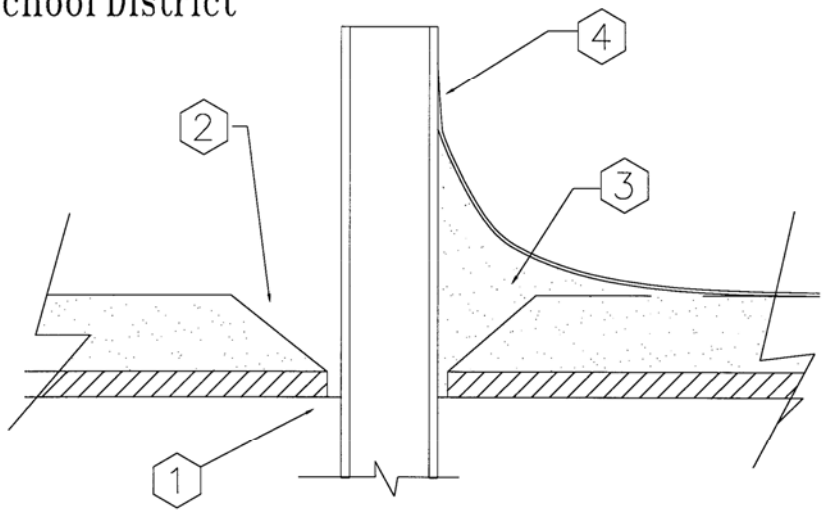

ROOF PREPARATION

1. Cut hole thru deck & foam system and install vent or conduit
2. Cut (E) foam @ 45 degree around pipe

FOAM AND COATING

3. Fill void using 3# density SPF tapered to height of 4" above (E) foam system.
4. Apply 32 mil High Tensile acrylic elastomeric coating in 3 separate coats. Extend 2" above foam. Sprinkle with granules.

PLANNING & ESTIMATING DEPARTMENT			
4600 N. BRAWLEY AVE.	PHONE: 559-457-3046	DRAWN BY: MF	Not to Scale
FRESNO, CA. 93722	FAX: 559-457-3059	DATE: 10/25/00	file: TN_SPF_03_Vent

3.14 JUNCTION BOXES:

A. Maintain "water-tight" integrity of all Junction Boxes mounted on roofs.

B. Junction Boxes shall be firmly supported as advised by District Roofer.

C. Caulk around all exterior Junction Boxes to prevent water from entering building and/or box.

D. Caulk around all couplings/nipples between buildings.

3.15 PULL BOXES:

A. Pull Box Final Grade shall be a sloping ½" above compacted ground grade around site of installation.

B. Pull Box installation shall include grounding cable throughout conduit system in accordance with ANSI/TIA/EIA-607-1994 standards and any applicable electrical and fire codes.

C. Field conditions will dictate actual Pull Box, quantity, locations, and layout.

D. Back-fill at Pull Box shall compacted by mechanical means.

E. Back-fill shall not be "watered" in place.

F. Pull Box Layout as shown in detail drawings are representative of intended cable and Inner Duct placement and routing within Pull Boxes.

G. Refer to the following details for Pull Box Installation examples:
1. E2-04: "Typical Pull Box Layout Two Ends/One Side Duct Entry".
2. E2-07: "Pull/Junction Box Section".
3. E2-43: "Pull Box PB-1".
4. E2-44: "Pull Box PB-7 Layout".
5. E2-45: "Typical Pull Box Layout PB-3".
6. E2-46: "Pull Box Layout PB-4".
7. E2-47: "Pull Box PB-5 Layout".
8. E2-48: "Pull Box Detail".
9. E2-49: "Pull Box PB-2 Layout".
10. E2-50: "J-Box Section".

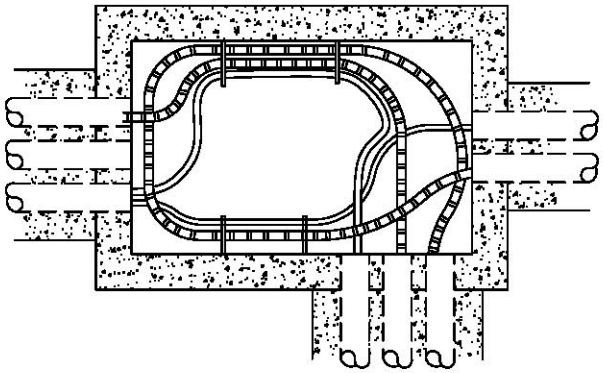

E2-04 TYPICAL PULLBOX LAYOUT
TWO ENDS / ONE SIDE DUCT ENTRY

Fresno Unified School District	FRESNO UNIFIED SCHOOL DISTRICT MAINTENANCE DEPARTMENT 4600 N. BRAWLEY AVE. P: 559.457.3261 FRESNO, CA 93722 F: 559.457.3709	LOCAL AREA NETWORKS VARIOUS SITES	SCALE: N.T.S. REVISION DATE: 02-23-07 SHEET #: E2-04

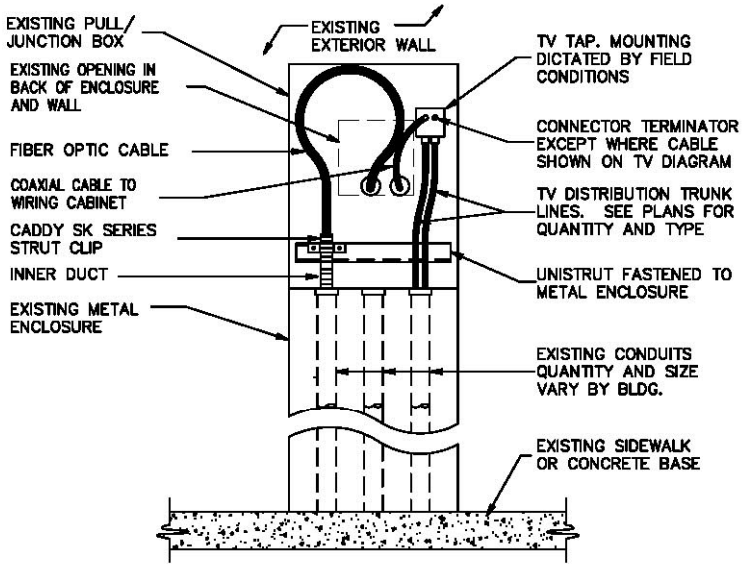

E2-07 PULL / JUNCTION BOX SECTION

Fresno Unified School District	FRESNO UNIFIED SCHOOL DISTRICT MAINTENANCE DEPARTMENT 4600 N. BRAWLEY AVE. P: 559.457.3261 FRESNO, CA 93722 F: 559.457.3709	LOCAL AREA NETWORKS VARIOUS SITES	SCALE: N.T.S. REVISION DATE: 02-23-07 SHEET #: E2-07

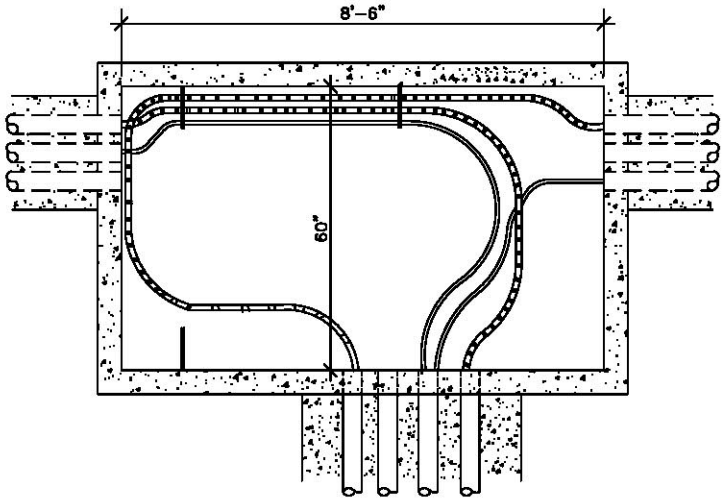

E2-43 PULLBOX PB-1

Fresno Unified School District	FRESNO UNIFIED SCHOOL DISTRICT MAINTENANCE DEPARTMENT 4600 N. BRAWLEY AVE. P: 559.457.3261 FRESNO, CA 93722 F: 559.457.3769	LOCAL AREA NETWORKS VARIOUS SITES	SCALE: N.T.S. REVISION DATE: 02-23-07 SHEET #: E2-43

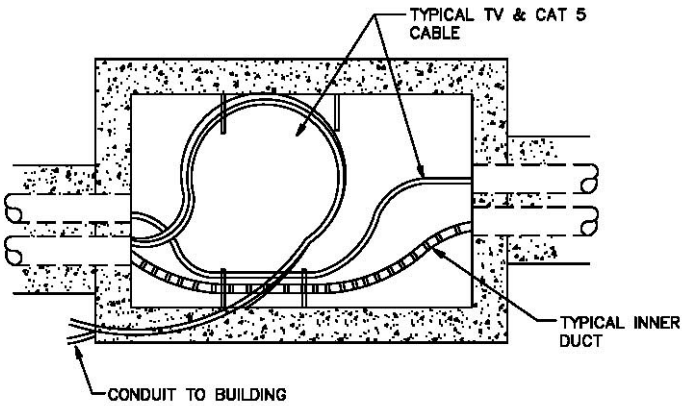

E2-44 PULLBOX PB-7 LAYOUT

Fresno Unified School District	FRESNO UNIFIED SCHOOL DISTRICT MAINTENANCE DEPARTMENT 4600 N. BRAWLEY AVE. P: 559.457.3261 FRESNO, CA 93722 F: 559.457.3709	LOCAL AREA NETWORKS VARIOUS SITES	SCALE: N.T.S. REVISION DATE: 02-23-07 SHEET #: E2-44

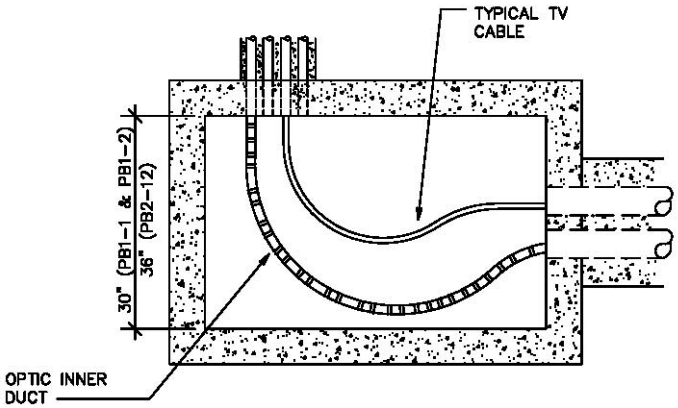

E2-45 TYP. PULLBOX LAYOUT PB-3

Fresno Unified School District	FRESNO UNIFIED SCHOOL DISTRICT MAINTENANCE DEPARTMENT 4600 N. BRAWLEY AVE. P: 559.457.3261 FRESNO, CA 93722 F: 559.457.3709	LOCAL AREA NETWORKS VARIOUS SITES	SCALE: N.T.S. REVISION DATE: 02-23-07 SHEET #: E2-45

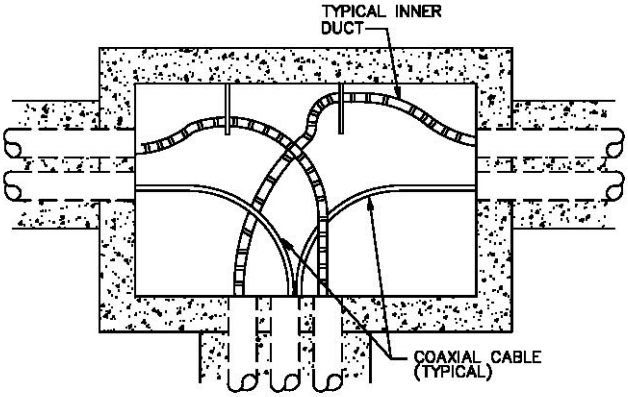

E2-46 PULLBOX PB-4 LAYOUT

Fresno Unified School District	FRESNO UNIFIED SCHOOL DISTRICT MAINTENANCE DEPARTMENT 4600 N. BRAWLEY AVE. FRESNO, CA 93722 P: 559.457.3261 F: 559.457.3709	LOCAL AREA NETWORKS VARIOUS SITES	SCALE: N.T.S. REVISION DATE: 02-23-07 SHEET #: E2-46

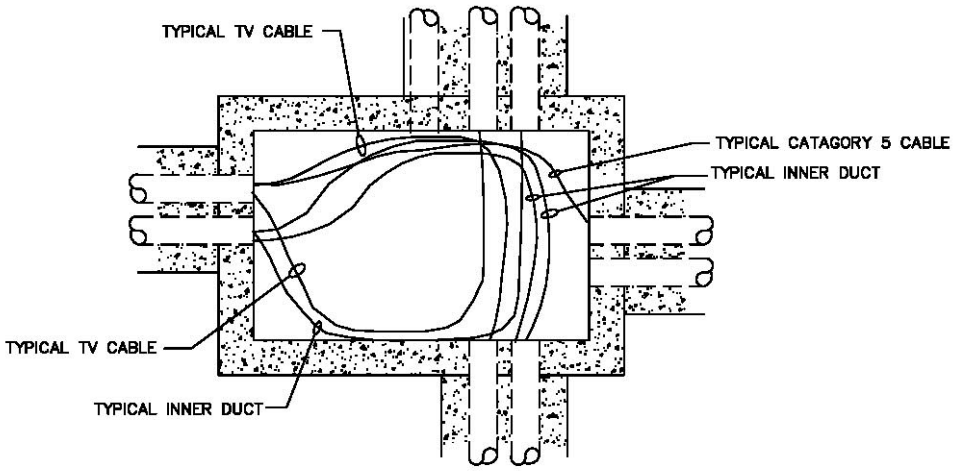

E2-47 PULLBOX PB5 LAYOUT

Fresno Unified School District	FRESNO UNIFIED SCHOOL DISTRICT MAINTENANCE DEPARTMENT 4600 N. BRAWLEY AVE. P: 559.457.3261 FRESNO, CA 93722 F: 559.457.3709	LOCAL AREA NETWORKS VARIOUS SITES	SCALE: N.T.S. REVISION DATE: 02-23-07 SHEET #: E2-47

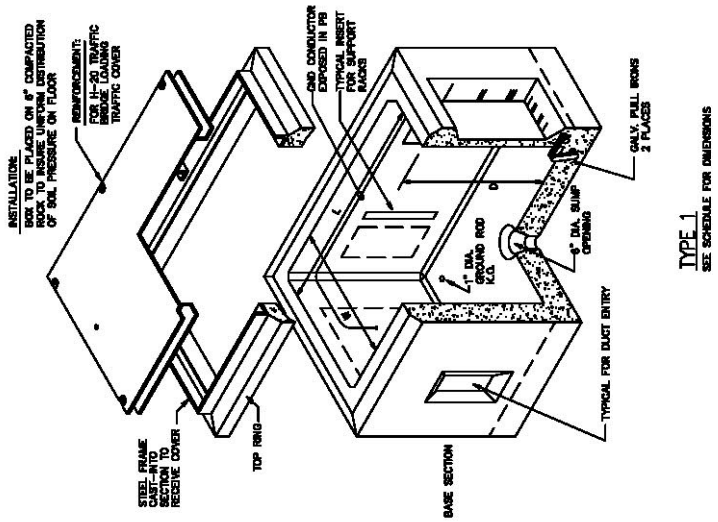

PULLBOX TYPE	L	W	D	COVER TYPE	BOX TYPE
PB-1	8'-6"	60"	48"	TRAFFIC	1
PB-2	48"	30"	36"	TRAFFIC	1
PB-3	48"	30"	36"	TRAFFIC	1
PB-4	60"	36"	36"	TRAFFIC	1
PB-5	60"	36"	36"	TRAFFIC	1
PB-6	48"	30"	36"	TRAFFIC	1
PB-7	48"	30"	36"	TRAFFIC	1
PB-8	48"	30'	36"	TRAFFIC	1
PB-9	48"	30"	36"	TRAFFIC	1
PB-10	30"	17"	24"	TRAFFIC	2
PB-11	30"	17"	24"	TRAFFIC	2
PB-12	30"	17"	24"	TRAFFIC	2
PB-13	30"	17"	24"	TRAFFIC	2
PB-14	30"	17"	24"	TRAFFIC	2

DIMENSIONS ARE MIN. INSIDE MEASUREMENTS. DEPTH SHALL BE INCREASED AS REQUIRED BY SPECIFIED CONDUIT SLOPE

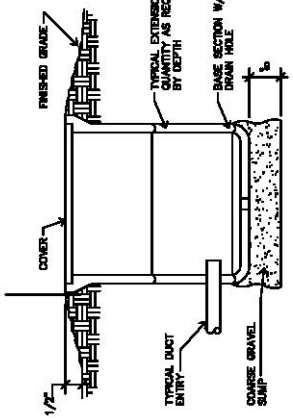

E2-48

PULLBOX DETAIL

Fresno Unified School District	FRESNO UNIFIED SCHOOL DISTRICT MAINTENANCE DEPARTMENT 4600 N. BRAWLEY AVE. P: 559.457.3261 FRESNO, CA 93722 F: 559.457.3709	LOCAL AREA NETWORKS VARIOUS SITES	SCALE: N.T.S. REVISION DATE: 02-23-07 SHEET #: E2-48

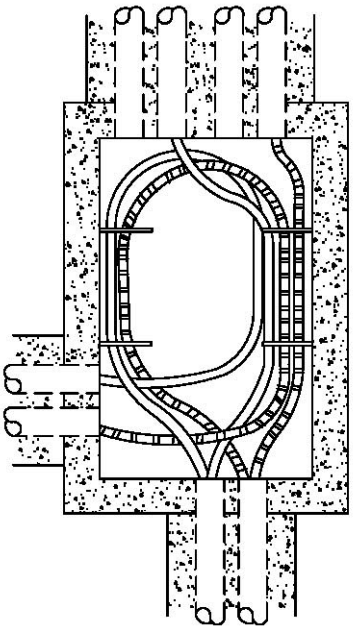

E2-49 PULLBOX PB-2 LAYOUT

Fresno Unified School District	FRESNO UNIFIED SCHOOL DISTRICT MAINTENANCE DEPARTMENT 4600 N. BRAWLEY AVE. P: 559.457.3261 FRESNO, CA 93722 F: 559.457.3709	LOCAL AREA NETWORKS VARIOUS SITES	SCALE: N.T.S. REVISION DATE: 02-23-07 SHEET #: E2-49

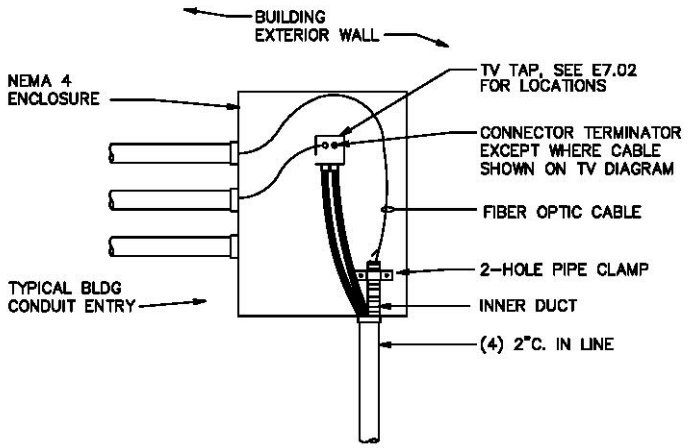

SEE FLOOR PLANS AND DETAILS FOR CONDUIT QUANTITY, SIZE AND ORIENTATION.

E2-50 J-BOX SECTION

Fresno Unified School District	FRESNO UNIFIED SCHOOL DISTRICT MAINTENANCE DEPARTMENT 4600 N. BRAWLEY AVE. P: 559.457.3261 FRESNO, CA 93722 F: 559.457.3709	LOCAL AREA NETWORKS VARIOUS SITES	SCALE: N.T.S. REVISION DATE: 02-23-07 SHEET #: E2-50

3.16 DUCT BANK/VAULTS

A. Concrete Encased Duct Banks shall have minimum 4” concrete encasement thickness from outer sides to conduits.

B. Concrete Encased Duct Banks shall have minimum 2” concrete encasement thickness between sides to conduits.

C. Grounding Conductor shall run through all concrete encased Duct Bank Systems.

D. Duct Bank System shall have a minimum of four (4) 4” conduit pipes installed between Vaults.

E. Duct Bank System shall have a minimum of two (2) 2” conduit pipes installed between Vaults and Pull Boxes.

F. Pull Boxes are to be used for as connections between Duct Bank/Vaults Systems and buildings only when 2” pipes are used and the number is less than three.

G. Duct Bank/Vaults are to be used as the main pathway for all conduits when the quantity is more than two.

H. The Duct Bank System shall have properly sized Inner-Duct installed in all conduit pipe.

I. Conduit pipe shall be filled to maximum capacity with specified Inner-Duct.

J. Inner-Duct shall be continuous run.

K. Inner-Duct shall be connected with watertight couplings.

L. Refer to Section 16700-2.12 for more details.

M. Field conditions will dictate total number of conduits installed within Duct Bank System.

N. Vault Final Grade shall be a sloping ½” above compacted ground grade around site of installation.

O. Vault installation shall include grounding cable throughout conduit system in accordance with ANSI/TIA/EIA-607-1994 standards and any applicable electrical and fire codes.

P. Refer to the following details for Duct Bank/Vaults Installation examples:
   1. E2-01: “Duct Bank Detail”.
   2. E2-02: “Duct Bank Detail”.
   3. E2-03: ”Trench Detail”.
   4. E2-35: “PB-1 to Data/Communication Room”.
   5. E2-36: “Duct Bank Detail”.
   6. E2-37: “Duct Bank Detail”.
   7. E2-38: “Duct Bank Detail”.

8. E2-39: “Duct Bank Detail”.
9. E2-40: “Duct Bank Detail”.
10. E2-41: “Duct Bank Detail”.
11. E2-42: “Duct Bank Detail”.

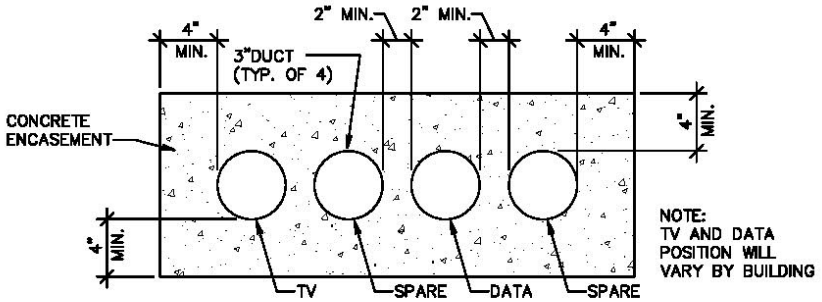

E2-01 DUCT BANK DETAIL

Fresno Unified School District	FRESNO UNIFIED SCHOOL DISTRICT MAINTENANCE DEPARTMENT 4600 N. BRAWLEY AVE. P: 559.457.3261 FRESNO, CA 93722 F: 559.457.3709	LOCAL AREA NETWORKS VARIOUS SITES	SCALE: N.T.S. REVISION DATE: 02-23-07 SHEET #: E2-01

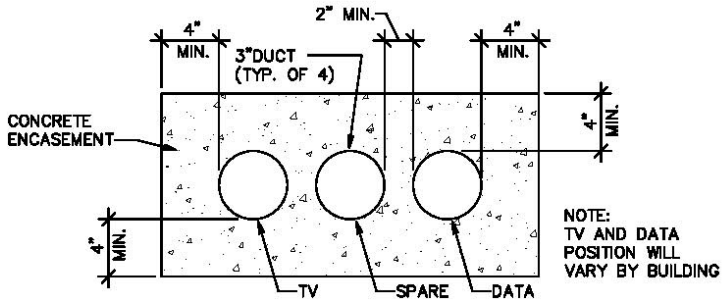

E2-02 DUCT BANK DETAIL

Fresno Unified School District	FRESNO UNIFIED SCHOOL DISTRICT MAINTENANCE DEPARTMENT 4600 N. BRAWLEY AVE. P: 559.457.3261 FRESNO, CA 93722 F: 559.457.3709	LOCAL AREA NETWORKS VARIOUS SITES	SCALE: N.T.S. REVISION DATE: 02-23-07 SHEET #: E2-02

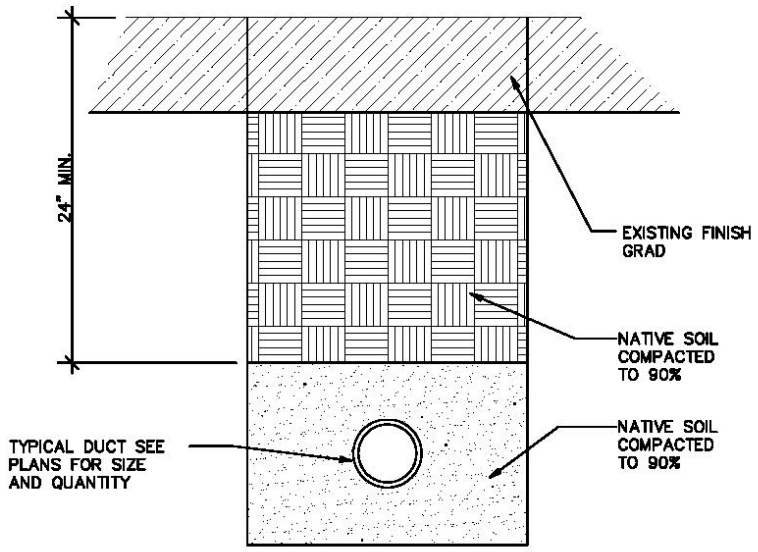

E2-03 TRENCH DETAIL

Fresno Unified School District	FRESNO UNIFIED SCHOOL DISTRICT MAINTENANCE DEPARTMENT 4600 N. BRAWLEY AVE. P: 559.457.3261 FRESNO, CA 93722 F: 559.457.3709	LOCAL AREA NETWORKS VARIOUS SITES	SCALE: N.T.S. REVISION DATE: 02-23-07 SHEET #: E2-03

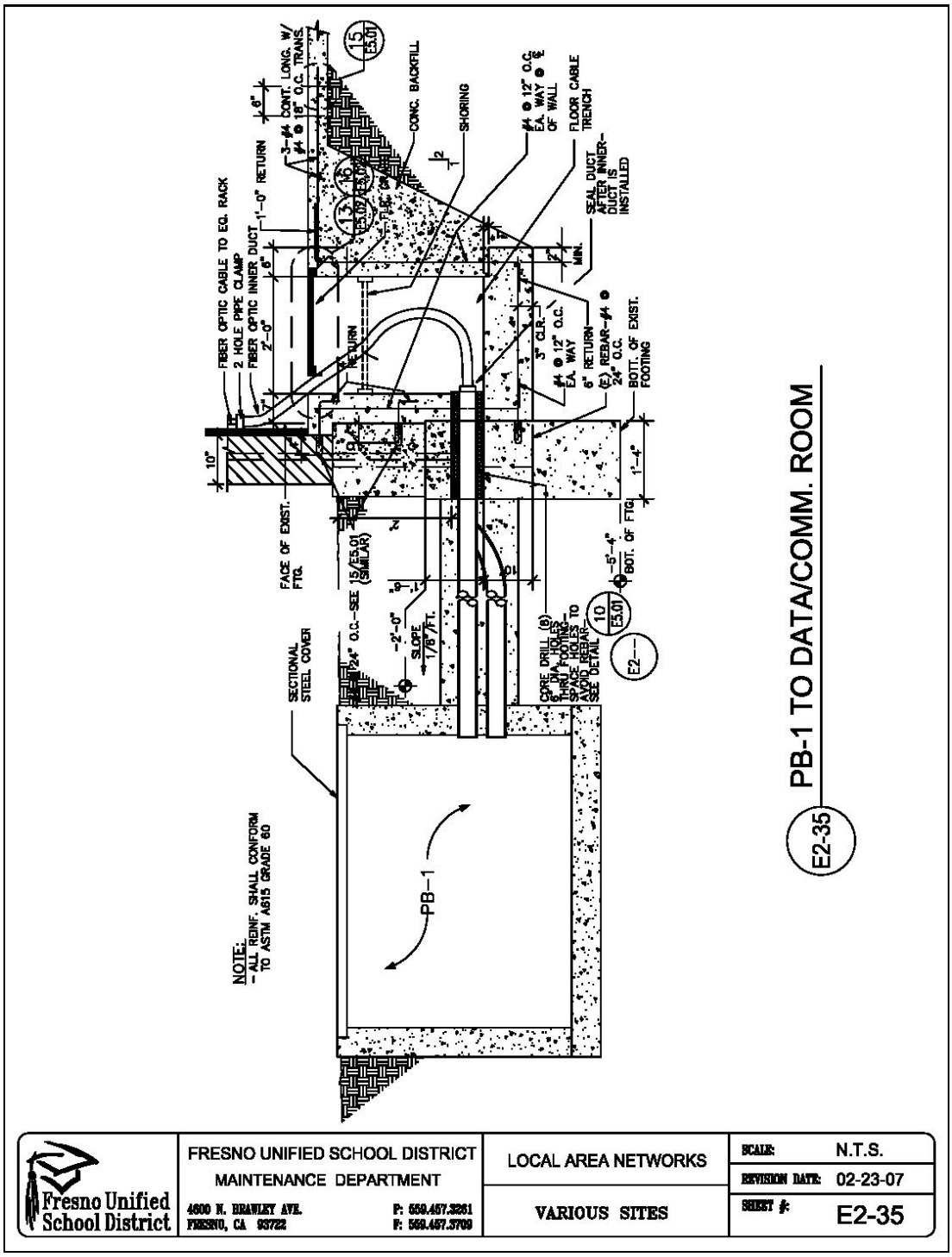
FIBER OPTIC CABLE TO EQ. RACK
2 HOLE PIPE CLAMP
FIBER OPTIC INNER DUCT
1'-0" RETURN
3-#4 CONT. LONG. W/ #4 @ 18" O.C. TRANS.
CONC. BACKFILL
SHORING
#4 @ 12" O.C. EA. WAY @ ℄ OF WALL
FLOOR CABLE TRENCH
SEAL DUCT AFTER INNER-DUCT IS INSTALLED
#4 @ 12" O.C. EA. WAY
6" RETURN
(E) REBAR-#4 @ 24" O.C.
BOTT. OF EXIST. FOOTING
FACE OF EXIST. FTG.
15/E5.01 (SIMILAR)
SLOPE 1/8"/FT.
SECTIONAL STEEL COVER
CORE DRILL (8) 6" HOLES THRU FOOTING-SPACE HOLES TO AVOID REBAR SEE DETAIL
BOT. OF FTG.
PB-1
NOTE:
- ALL REINF. SHALL CONFORM TO ASTM A615 GRADE 60
PB-1 TO DATA/COMM. ROOM
E2-35
Fresno Unified School District
FRESNO UNIFIED SCHOOL DISTRICT
MAINTENANCE DEPARTMENT
4600 N. BRAWLEY AVE.
FRESNO, CA 93722
P: 559.457.3261
F: 559.457.3709
LOCAL AREA NETWORKS
VARIOUS SITES
SCALE: N.T.S.
REVISION DATE: 02-23-07
SHEET #: E2-35

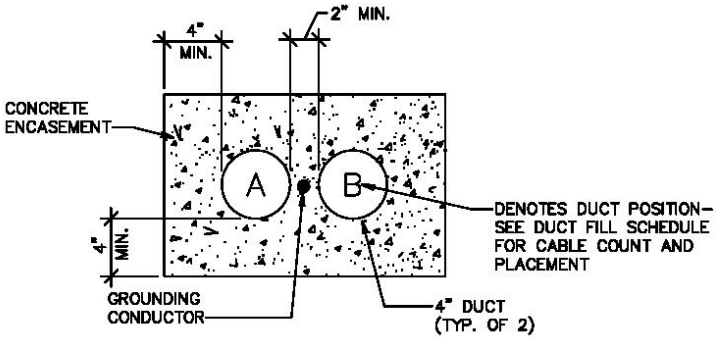

E2-36 DUCT BANK DETAIL

Fresno Unified School District	FRESNO UNIFIED SCHOOL DISTRICT MAINTENANCE DEPARTMENT 4600 N. BRAWLEY AVE. P: 559.457.3261 FRESNO, CA 93722 F: 559.457.3709	LOCAL AREA NETWORKS VARIOUS SITES	SCALE: N.T.S. REVISION DATE: 02-23-07 SHEET #: E2-36

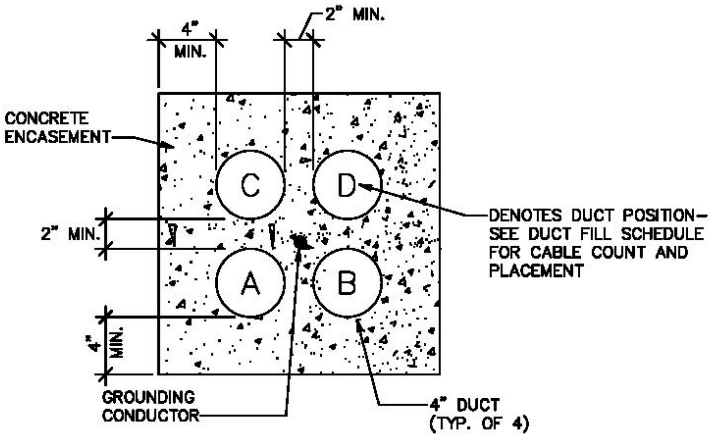

E2-37 DUCT BANK DETAIL

Fresno Unified School District	FRESNO UNIFIED SCHOOL DISTRICT MAINTENANCE DEPARTMENT 4600 N. BRAWLEY AVE. P: 559.457.3261 FRESNO, CA 93722 F: 559.457.3709	LOCAL AREA NETWORKS VARIOUS SITES	SCALE: N.T.S. REVISION DATE: 02-23-07 SHEET #: E2-37

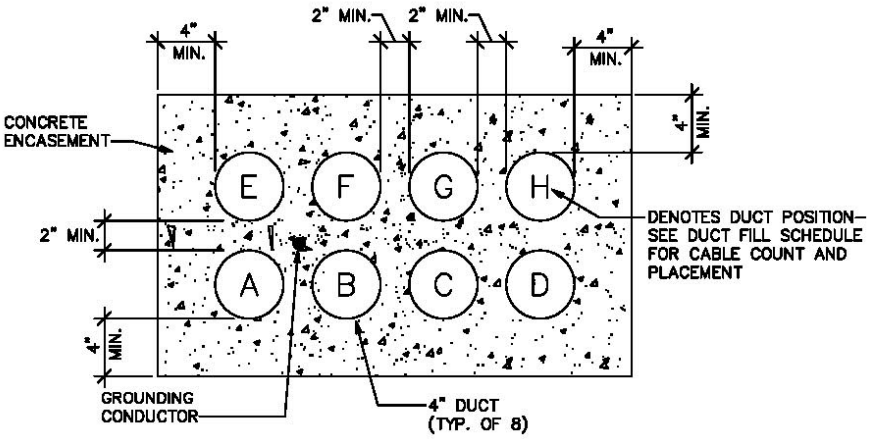

E2-38 DUCT BANK DETAIL

Fresno Unified School District	FRESNO UNIFIED SCHOOL DISTRICT MAINTENANCE DEPARTMENT 4600 N. BRAWLEY AVE. P: 559.457.3261 FRESNO, CA 93722 F: 559.457.3709	LOCAL AREA NETWORKS VARIOUS SITES	SCALE: N.T.S. REVISION DATE: 02-23-07 SHEET #: E2-38

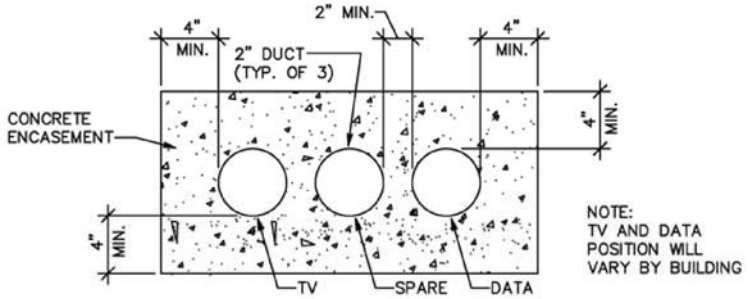

E2-39 DUCT BANK DETAIL

Fresno Unified School District	FRESNO UNIFIED SCHOOL DISTRICT MAINTENANCE DEPARTMENT 4600 N. BRAWLEY AVE. FRESNO, CA 93722 P: 559.457.3261 F: 559.457.3709	LOCAL AREA NETWORKS VARIOUS SITES	SCALE: N.T.S. REVISION DATE: 02-23-07 SHEET #: E2-39

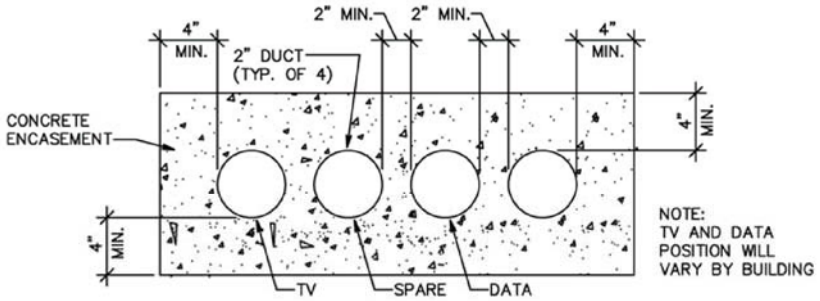

E2-40 DUCT BANK DETAIL

Fresno Unified School District	FRESNO UNIFIED SCHOOL DISTRICT MAINTENANCE DEPARTMENT 4600 N. BRAWLEY AVE. FRESNO, CA 93722 P: 559.457.3261 F: 559.457.3709	LOCAL AREA NETWORKS VARIOUS SITES	SCALE: N.T.S. REVISION DATE: 02-23-07 SHEET #: E2-40

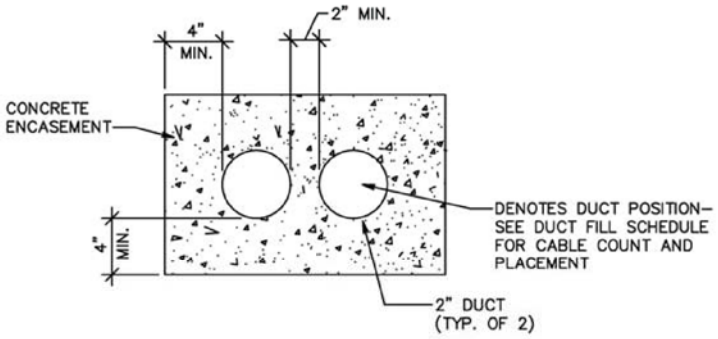

E2-41 DUCT BANK DETAIL

Fresno Unified School District	FRESNO UNIFIED SCHOOL DISTRICT MAINTENANCE DEPARTMENT 4600 N. BRAWLEY AVE. FRESNO, CA 93722 P: 559.457.3261 F: 559.457.3709	LOCAL AREA NETWORKS VARIOUS SITES	SCALE: N.T.S. REVISION DATE: 02-23-07 SHEET #: E2-41

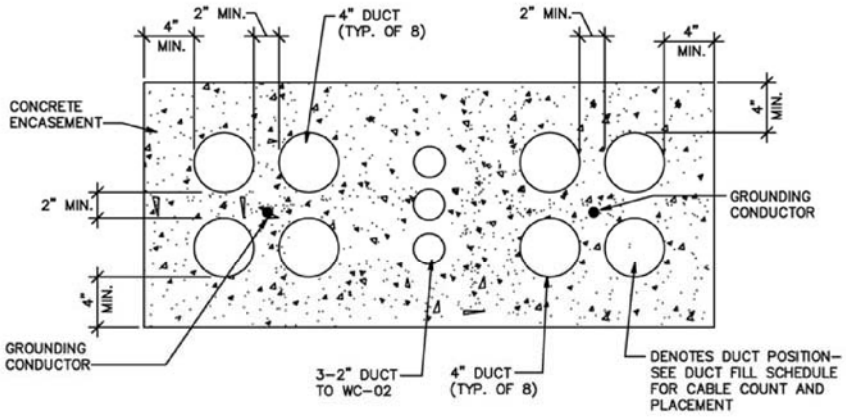

E2-42 DUCT BANK DETAIL

Fresno Unified School District	FRESNO UNIFIED SCHOOL DISTRICT MAINTENANCE DEPARTMENT 4600 N. BRAWLEY AVE. FRESNO, CA 93722 P: 559.457.3261 F: 559.457.3709	LOCAL AREA NETWORKS VARIOUS SITES	SCALE: N.T.S. REVISION DATE: 02-23-07 SHEET #: E2-42

3.17 ELECTRICAL POWER FOR ALL EQUIPMENT CABINETS/RACKS

A. All Equipment Cabinets/Racks shall have the following electrical connections install:
   1. Install a duplex convenience outlet, 15A, 125V, three wire, with grounding pole within the equipment cabinet.
   2. Obtain power from the nearest electrical panel board with capacity to support the additional load.
   3. Install a new 20A circuit breaker to provide a dedicated circuit for the Equipment Cabinet.
   4. If existing panel board has no space for additional circuit breakers install a new branch panel board to provide power for this location.

3.18 CONDUIT, RACEWAY, AND EQUIPMENT CABINETS/RACKS INSTALLATION

A. Furnish and install all necessary conduits, raceways, and equipment cabinets for the Data and Coaxial Cabling.
   1. Use of existing conduits and raceways is not allowed.
   2. The Contractor shall suggest, after a review of Site conditions, routing of Conduits used to connect the various parts of the work.
   3. Preferred routing, in order of District preference, is:
      a. In concealed spaces, i.e., attic spaces in buildings or corridors, even if Contractor must install hatches to provide entry into such spaces (refer to E2-26 for Detail).
      b. Underground.
      c. On top of corridor roofs.
      d. Under corridor roof, with the conduit fastened flush with the surface.
      e. On visible vertical surfaces.
      f. Combination of above.
   4. In attic spaces with “existing” Heat Detectors “J-Hooks may be used to contain the cables. Hatches must be installed, if necessary, to make use of this space (refer to E2-26 for Detail).
   5. In attic spaces with NO “existing” Heat Detectors, EMT or ENT must be installed and terminated into Junction Boxes, which shall be mounted outside of the attic space.
   6. Holes created to gain entry for the installation of EMT/ENT shall be covered and sealed to make the space non-accessible.
   7. N.F.P.A. requires that these spaces be equipped with Heat Detectors if they are made accessible.
   8. Districts preference is to conceal all wiring pathways.
   9. Contractor shall make reasonable effort to accomplish this goal.
   10. Where corridor or other attic spaces would provide this concealment contractor shall install EMT, ENT (Electrical Non-metallic Tubing), or “J-Hooks” as may be appropriate for the type of space.
   11. Conduits which interconnect buildings or classroom wings shall be 2 each, 2 inch conduits minimum.
   12. The District’s Project Manager will have final approval of all conduit routing.

3.19 TESTING:

A. Category 6 Cable Testing and Certification:
   1. All Category 6 cable and data jacks shall be tested following installation.

      Testing shall be in accordance with TIA/EIA TSB-67 for link testing at Category 6 standards or newer, and include the following:
      a. Wire Map.
      b. Length.
      c. Attenuation.
      d. PS-ELFEXT.
      e. SRL.
      f. PS-NEXT.
   2. Use commercially manufactured field tester with hard copy of test results.
   3. Field tester shall meet TIA/EIA TSB-67, Level II or newer, accuracy criteria.
   4. Field tester shall be Microtest Omni-Scanner or equal.
   5. Any cable or termination, which fails to test, shall be replaced and retested.
   6. Three copies (hard copy) of the test results shall be delivered to the Owner prior to project acceptance.

B. Fiber Optic Cable Testing and Certification:
   1. All Fiber Optic Cable shall be tested using an approved Optical Power Meter.
   2. Power Meter measurements shall be made from both ends of the cable.
   3. Measured results shall be within cable manufacturer's specifications.
   4. Cable shall be tested at both 850 nm and 1300 nm for Multi-mode fiber and at 1300 and 1550 nm for Single-mode fiber.
   5. Any cable or termination, which does not meet manufacturer's specifications, shall be replaced and retested.
   6. Provide three copies (hard copy), bounded, of the test results for Owner's approval before project acceptance.
   7. All Power Meter Testing shall be done in the presence of a District appointed Observer.

B. Over-all System Testing:
   1. Contractor shall test each Data Jack utilizing a method which tests the Channel Link using actual 802.3 data flow.
   2. The method employed shall use a device inserted at the Data Jack and a device connected to the central point of the LAN to show that there is a connection and communications between the two devices.
   3. One means of fulfilling this requirement is to employ an approved network analyzer.
   4. Fluke OmniView Series II Network Analyzer meets this requirement.
   5. The unit shall be connected at the terminal end LAN's central point and the other unit shall be inserted at any Data Jack in the system.
   6. All Testing shall be done in the presence of a District appointed Observer.

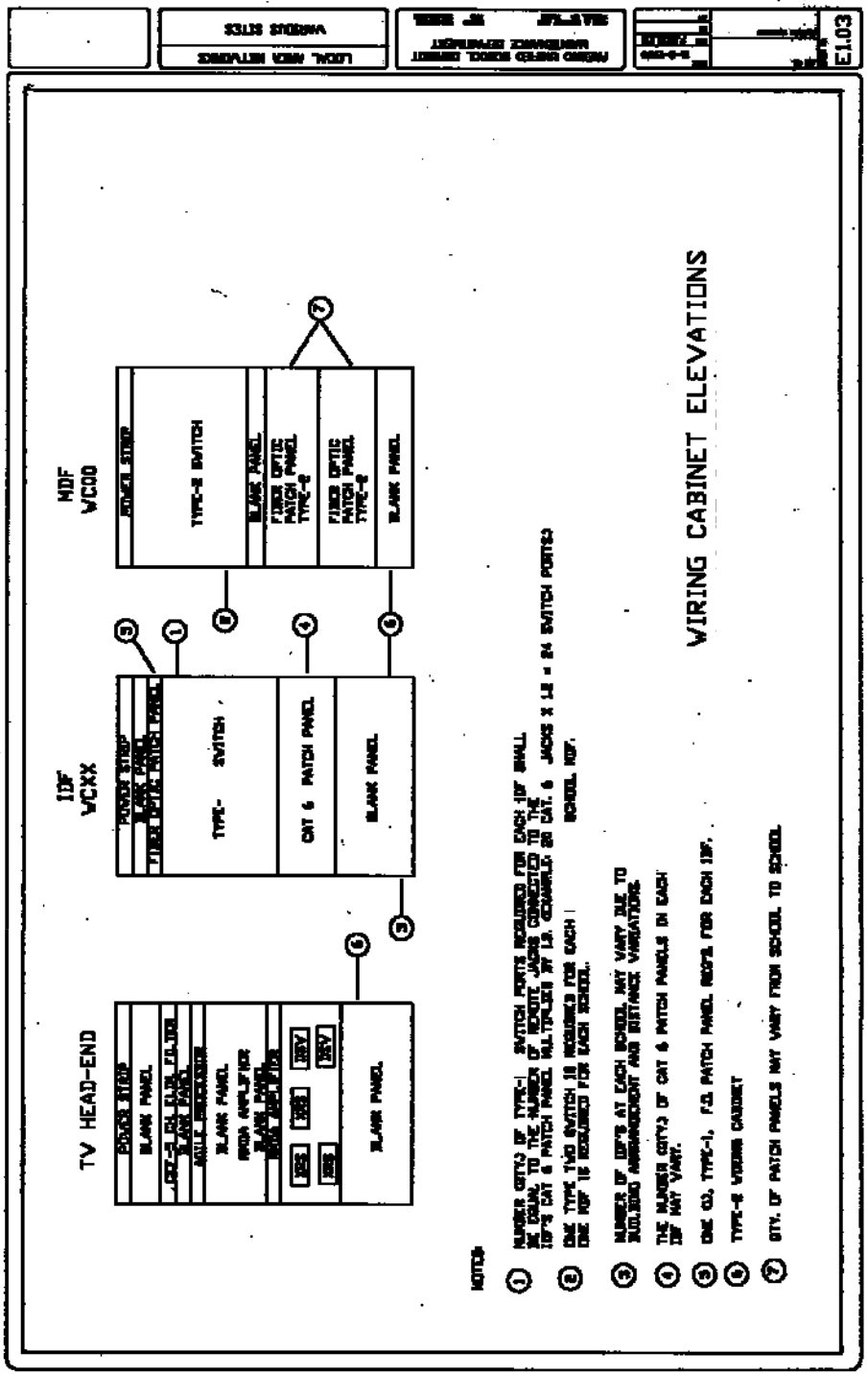
MDF
VC00
POWER STRIP
TYPE-2 SWITCH
BLANK PANEL
FIBER OPTIC PATCH PANEL TYPE-2
FIBER OPTIC PATCH PANEL TYPE-2
BLANK PANEL
IDF
VCXX
POWER STRIP
BLANK PANEL
FIBER OPTIC PATCH PANEL
TYPE- SWITCH
CAT 6 PATCH PANEL
BLANK PANEL
TV HEAD-END
BLANK PANEL
BLANK PANEL
BLANK PANEL
BLANK PANEL
WIRING CABINET ELEVATIONS
NOTES:
1 NUMBER QTY(S) OF TYPE-1 SWITCH PORTS REQUIRED FOR EACH IDF SHALL BE EQUAL TO THE NUMBER OF ROUTE JACKS CONNECTED TO THE IDF'S CAT 6 PATCH PANEL MULTIPLIED BY 1.5. (EXAMPLE: 20 CAT. 6 JACKS X 1.5 = 24 SWITCH PORTS)
2 ONE TYPE TWO SWITCH IS REQUIRED FOR EACH SCHOOL MDF.
ONE MDF IS REQUIRED FOR EACH SCHOOL.
3 NUMBER OF IDF'S AT EACH SCHOOL MAY VARY DUE TO BUILDING ARRANGEMENT AND DISTANCE VARIATIONS.
4 THE NUMBER QTY(S) OF CAT 6 PATCH PANELS IN EACH IDF MAY VARY.
5 ONE (1), TYPE-1, F.O. PATCH PANEL REQ'D. FOR EACH IDF.
6 TYPE-2 VIDEO CABINET
7 QTY. OF PATCH PANELS MAY VARY FROM SCHOOL TO SCHOOL
E1.03

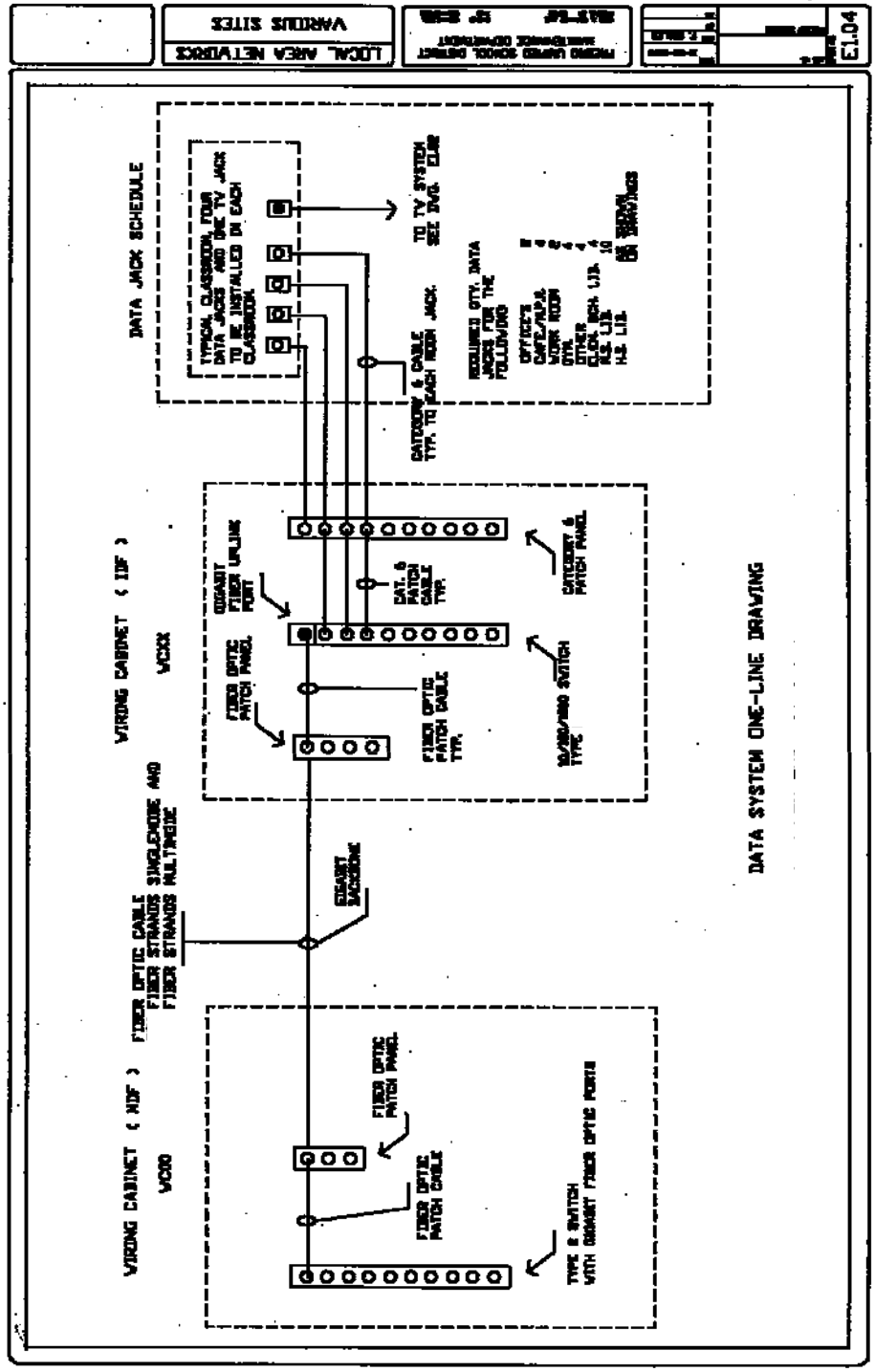
DATA JACK SCHEDULE
TYPICAL CLASSROOM FOUR DATA JACKS AND ONE TV JACK TO BE INSTALLED IN EACH CLASSROOM.
TO TV SYSTEM SEE DWG. E1.02
CATEGORY 6 CABLE TYP. TO EACH ROOM JACK.
REQUIRED QTY. DATA JACKS FOR THE FOLLOWING
OFFICE'S
CAFE/MPR.
WORK ROOM
GYM.
OTHER
CLOS. RM. LIB.
K.S. LIB.
H.S. LIB.
WIRING CABINET (IDF)
VCXX
GIGABIT FIBER UPLINK PORT
CAT. 6 PATCH CABLE TYP.
CATEGORY 6 PATCH PANEL
FIBER OPTIC PATCH PANEL
FIBER OPTIC PATCH CABLE TYP.
10/100/1000 SWITCH TYPE
FIBER OPTIC CABLE
FIBER STRANDS SINGLEMODE AND
FIBER STRANDS MULTIMODE
GIGABIT BACKBONE
WIRING CABINET (MDF)
VCXX
FIBER OPTIC PATCH PANEL
FIBER OPTIC PATCH CABLE
TYPE 2 SWITCH WITH GIGABIT FIBER OPTIC PORTS
DATA SYSTEM ONE-LINE DRAWING
LOCAL AREA NETWORKS
VARIOUS SITES
E1.04

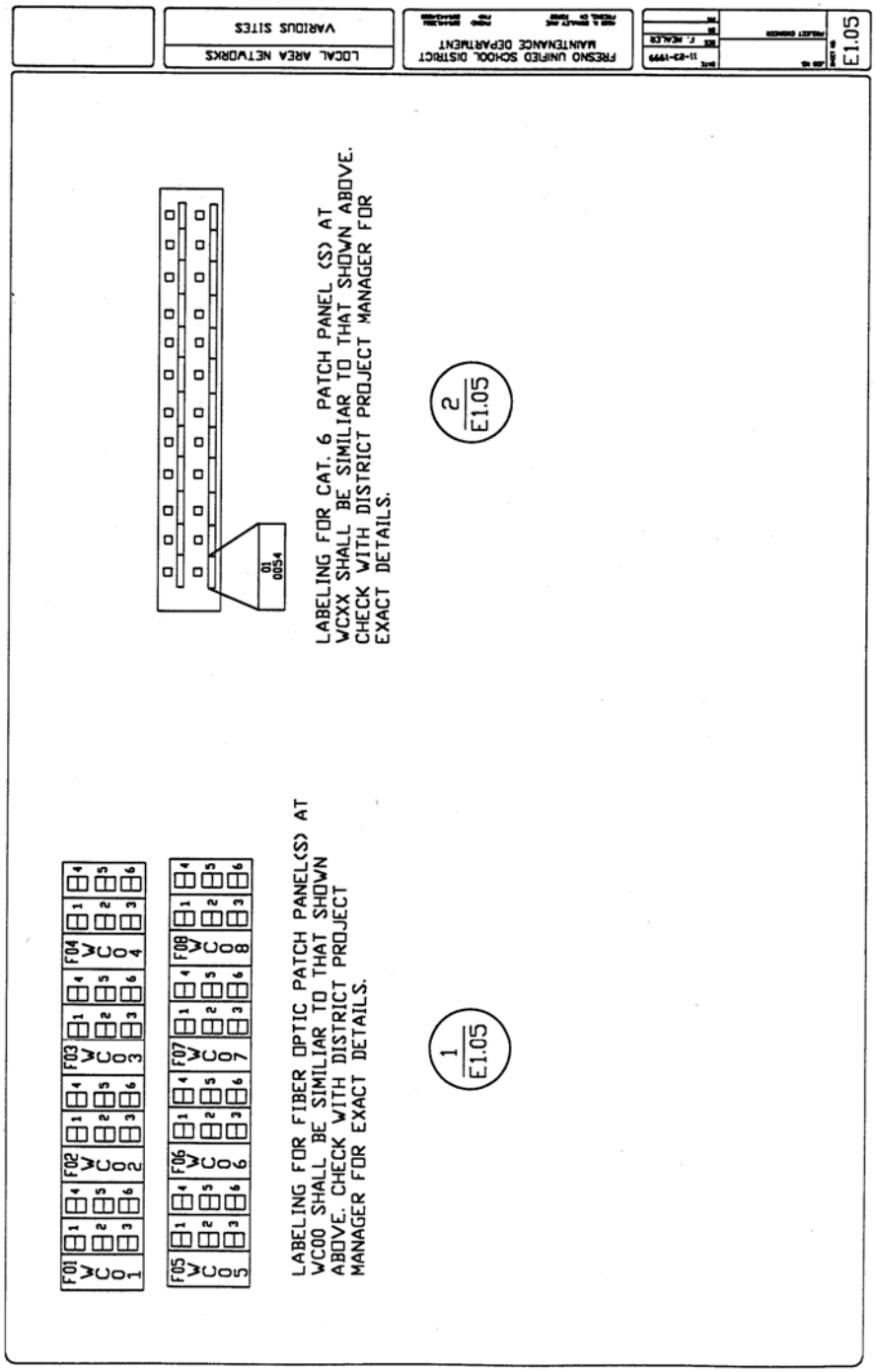

END OF SECTION

FRESNO UNIFIED SCHOOL DISTRICT
REV DATE: 05/17/2011

SECTION 27 30 00 – VoIP COMMUNICATION SYSTEMS

PART 1 – GENERAL

It is the Contractor's responsibility to address any questions or clarifications with the District's Network and Engineering Department prior to installing by calling (559) 457-2540.

1.01 RELATED DOCUMENTS

A. Drawings and general provisions of the Contract, including Division 00 General conditions and Division 01 General Requirements, apply to this Section.

1.02 SUMMARY

A. This Section includes Communications Systems, including a provision for service by the telephone utility organization.

1.03 SUBMITTALS

A. General: Submit the following according to Division 01 General Requirements Section 01 33 23, Shop Drawings, Product Data, and Samples.

B. Record of field tests of system.

1.04 QUALITY ASSURANCE

A. The Contractor shall use adequate numbers of skilled work persons who are thoroughly trained, certified, and experienced on the necessary crafts and completely familiar with the specified requirements and methods needed for the proper performance of the work. Supporting documentation addressing this requirement should be included.

B. The Contractor must provide a certified project manager who has demonstrated the ability to supervise a large Voice and Data convergence projects. The project manager must be available to be interviewed by FUSD and/or their representative, and must be deemed acceptable by FUSD and/or their representative. The Project Manager must be available to attend meetings as required. Acceptance will not be unreasonably withheld.

C. The work of this section shall conform to California Code of Regulations, Part 3, and all other applicable codes and standards.

D. Only a qualified Contractor holding licenses required by legally constituted authorities having jurisdiction over the work shall do work. Contractor shall have completed projects of comparable scope to systems described herein and shall have been engaged in business of supplying and installing specified type of systems for at least 5 years.

E. Contractor shall warranty all work executed and materials furnished shall be free from defects of material and workmanship for a period of 2 years from acceptance date of

Contract Completion, excluding specific items of work that require a warranty of a greater period as set forth in this Specification. Immediately upon receipt of written notice from FUSD, the Contractor shall repair or replace at no expense to FUSD, any defective material or work that may be discovered before final acceptance of work or within warranty period; any material or work damaged thereby; and adjacent material or work that may be displaced in repair or replacement. Examination of or failure to examine work by FUSD shall not relieve Contractor from these obligations.

F. Contractor shall have a service organization capable of responding to warranty service requests within 24 hours of receipt of written notification and resolution within 5 working days for all system components. If Contractor fails to repair or replace material or work indicated above within 15 days of receiving written notice, the District, with its own personnel or by Contract, may proceed with repair or replacement and assess cost against Contractor, if Contractor does not respond accordingly.

G. Persons skilled in trade represented by work, and in accordance with all applicable building codes, shall install system in accordance with best trade practice.

H. Contractor shall include in the Material List Submission copies of the manufacturers' certifications that the Contractor is an authorized distributor of the submitted manufacturers' products and has been adequately trained in the installation of those products. This applies to all proposed system hardware and software.

I. Contractor shall include in the Material List Submission a list of five projects of similar scope acceptable to FUSD and shall have a service organization capable of responding to warranty service requests within 24 hours of receipt of written notification and resolution within 1 day. Contractor shall include the telephone number of the customer's client contact for each project and a letter signed by a corporate officer, partner, or owner of the contracting company describing the service capability of the company and stating the company's commitment to maintain that service capability through the warranty period.

J. Contractor shall have successful experience in executing projects of this type and scope.

1. Submit with Bid, a list of projects to provide proof of required experience, including the following:
   a. Description of project.
   b. Name, address and phone number of Owner.
   c. Name and phone number of Owner's contact person having knowledge of the project.
   d. Approximate cost of the Voice/Data cabling and associated electrical work for the project.

2. The Proposal shall include a list of all work persons the contractor proposes to use for the Voice/Data cabling portion of this project.

3. This list shall include:
   a. Name of worker.
   b. Worker's resume showing training and experience.
   c. List of contact persons and their telephone numbers.

4. Each worker proposed for work in the Voice/Data cabling portion of this work shall present a Certificate of Completion of Training in Fiber Optic and Category 6 cabling.

a. Only workers with Certificates of Fiber Optic training may perform work in that area.
b. Only workers with Certificates of Category 6 training may perform work in that area.

5. The District Inspector or Project Manager may ask any or all Voice/Data cabling workers to demonstrate their skill level before performing any work or continuing work.

6. If, in the opinion of the District, any worker is found to be deficient in this area, the Contractor must immediately provide necessary training to remove the deficiency or replace the worker with one having the required skills.

7. The Contractor shall use adequate numbers of skilled work person who are thoroughly trained and experienced on the necessary crafts and completely familiar with the specified requirements and methods needed for the proper performance of the work.

8. The Contractor must provide a Project Manager who has demonstrated the ability to supervise a VoIP/Data LAN project.

9. The Project Manager must be available to be interviewed by FUSD and/or their representative, and must be deemed acceptable by FUSD and/or their representative.

10. Acceptance will not be unreasonably withheld.

11. The Project Manager must be available to attend meetings as required.

12. The work of this section shall conform to California Code of Regulations, Part 3, and all other applicable codes and standards.

13. Only a qualified Contractor holding licenses required by legally constituted authorities having jurisdiction over the work shall do work.

14. Contractor shall have completed similar projects of equal scope to systems described herein and shall have been engaged in business of supplying and installing specified type of systems for at least five years.

15. Use equipment manufacturers certified contractors.

16. Spare parts common to proposed system shall be warranty for a period no less than that stipulated with Manufacturer warranty from the time of installation

17. If no time period is contractually stipulated, the Contractor shall provide a warranty of five years.

18. Contractor shall warranty that all work executed and materials furnished shall be free from defects of material and workmanship for a period of two years from acceptance date of Contract Completion, excluding specific items of work that require a warranty of a greater period as set forth in this Specification.

19. Immediately upon receipt of written notice from the District, the Contractor shall repair or replace, at no expense to the District, any defective material or work that may be discovered before final acceptance of work or within warranty period; any material or work damaged thereby; and adjacent material or work that may be displaced in repair or replacement.

20. Examination of or failure to examine work by the District shall not relieve Contractor from these obligations.

21. If Contractor fails to repair or replace material or work indicated above within 15 days of receiving written notice, the District, with its own personnel or by Contract, may proceed with repair or replacement and assess cost against Contractor, if Contractor does not respond accordingly.

22. Persons skilled in trade represented by work, and in accordance with all applicable building codes, shall install system in accordance with best trade practice.

K. All work and materials shall be in full accordance with the latest rules and regulations of the following codes, industry standards and references:

1. State of California:
   a. Title 24, Building Standards, State of California.
   b. Occupational Safety and Health Act (OSHA).
   c. Title 8, Electrical Safety, State of California.
   d. Title 19, California Code of Regulations.

2. Telecommunications Industry Association/Electronics Industry Association (TIA/EIA).
   a. ANSI/TIA/EIA-STD-RS455, Standard Test Procedures for Fiber Optic Fibers, Transducers, Connecting and Terminating Devices.
   b. Telecommunications Industry Association/Electronic Industry Association (TIA/EIA) Standard 569, Commercial Building Standard for Telecommunications Pathways and Spaces.

3. BICSI-Telecommunications Distribution Methods Manual, Volumes #1 and 2.
4. Underwriters Laboratories Inc. (UL): Applicable listings and ratings.
5. UL LAN Cable Certification Level 5.
6. National Electric Code (Articles 770, 800, latest issue).
7. National, State, and Local Occupational Safety and Health Administration (OSHA) building and fire codes.
8. ANSI/TIA/EIA Telecommunications Building Wiring Standards.
9. ANSI/TIA/EIA-568-A, Commercial Building Telecommunications Cabling Standard (October 1995 or latest version).
10. ANSI/TIA/EIA-568-A-2, Corrections and Additions to TIA/EIA-568-A-2 (August 1998 or latest version).
11. ANSI/TIA/EIA-568-A-3, Addendum No. 3 to TIA/EIA-568-A (December 1998 or latest version).
12. ANSI/TIA/EIA-568-A-5, Transmission Performance Specifications for 4-Pair 100 ohm Category 5E Cabling (February 2000 or latest version).

13. ANSI/TIA/EIA-568-B-3, Optical Fiber Cabling Components Standard (March 2000 or latest version).
14. ANSI/TIA/EIA-569-A, Commercial Building Standard for Telecommunications Pathways and Spaces (February 1998 or latest version)
15. ANSI/TIA/EIA-569-A-1, Commercial Building Standard for Telecommunications Pathways and Spaces Addendum 1 - Surface Raceways (March 2000 or latest version).
16. ANSI/EIA/TIA-598-A, Optical Fiber Cable Color Coding (May 1995 or latest version).
17. ANSI/TIA/EIA-606, The Administration Standard for the Telecommunications Infrastructure of Commercial Building (February 1993 latest version).
18. ANSI/TIA/EIA-607, Commercial Building Grounding and Bonding Requirements for Telecommunications (August 1994 or latest version).
19. ANSI/TIA/EIA-758, Customer-Owned Outside Plant Telecommunications Cabling Standard (April 1999 or latest version).
20. ANSI/TIA/EIA-758-1, Addendum No. 1 to TIA/EIA-758, Customer-Owned Outside Plant Telecommunications Cabling Standard (March 1999 or latest version).
21. TIA/EIA TSB-67, Transmission Performance Specifications for Field Testing of Unshielded Twisted-Pair Cabling Systems (October 1995 or latest version).
22. TIA/EIA TSB-72, Centralized Optical Fiber Cabling Guidelines (October 1995 or latest version).
23. Institute of Electrical and Electronic Engineers (IEEE) 802.3 (Ethernet), 802.3Z (Gigabit Ethernet over optical fiber), 802.3ab (Gigabit Ethernet over 4-pair Category 6 or higher), 802.11 (Wireless LAN).
24. BICSI Telecommunications Distribution Methods Manual (2000 or latest version).
25. FCC Part 68.50.
26. National Electrical Manufacturer’s Association (NEMA).
27. National Fire Protection Association (NFPA), NFPA-70.
28. CCR Part 3 - California Electrical Code latest issue.
29. CCR Part 2 - Uniform Building Code latest issue.
30. ITU H.225.0, Call Signaling Protocols and Media Stream Packetization for Packet-based Multimedia (Includes Q.321 and RAS).
31. ITU H.223.0 Annex G, Gatekeeper to Gatekeeper (Inter-domain) Communication.
32. ITU H.235, Security and Encryption for H-Series Multimedia Terminals.
33. ITU H.245, Control Protocol for Multimedia Communication.
34. ITU H.450.x, Supplementary Services for Multimedia.
35. Generic Functional Protocol for the Support of Supplementary Services in H.323.
36. Call Transfer.
37. Call Diversion.
38. Call Hold.
39. Call Park and Pick-up.
40. Call Waiting.
41. Message Waiting.
42. Identification Services.
43. ITU H.323, Packet-based Multimedia Communications Systems.
44. ITU H.323 Annex E, Call Connection Over UDP.
45. ITU H.323 Annex F, Single-use Device.
46. ITU I.120 Series, Data Protocols for Multimedia Conferencing.

L. Nothing in the drawings or specifications is to be construed to permit work not conforming to the codes or standards.

1. These codes or standards are to be considered minimum requirements.
2. Should the plans or specifications call for material, methods or construction of a higher standard, the plans or specifications shall govern.

1.05 SYSTEM DESCRIPTION:

A. The VOICE OVER INTERNET PROTOCAL (VOIP) / HYBRID ANALOG Communications system shall provide the minimum telephone features listed below.

1. Ability to place a call on hold, call transfer, 3- to 6-way telephone internal/external conferencing, directed call pick-up, telephone privacy, directed call-park, ARS (automatic route select/least call routing), call bridging, multiple call appearances, six points of coverage (cover path or hunting) and malicious call trace.

2. Analog connectivity for Phones, Modems, Public Address System (PA), Energy Control Management System (ECMS), FAX machines, Fire backup dialers, Intrusion backup system, 911 services, and.

B. The system shall also provide intercommunication function, complete with programmable call restrictions.

C. All Equipment listed within the Fresno Unified School District Specifications will be provided by the District and installed by the Contractor.

1.06 REGULATORY REQUIREMENTS

A. Installation subject to requirements of the following:
1. California Electric Code (CEC)
2. Underwriters Laboratories (UL)
3. California Building Code (CBC)
4. Federal Communications Commission (FCC)

1.07 OPERATION AND MAINTENANCE DATA

A. Submit data in accordance with the requirements of Division 01 General Requirements section 01 78 01 Close Out Documents of these specifications for the telephone system. Include three copies of the manufacturer’s switch documentation and three sets of system wiring drawings.

1.08 VENDOR QUALIFICATIONS

A. All equipment, field start-up and testing furnished under this specification shall be furnished by the factory authorized dealer of the specified equipment for the area of the project site. The dealer shall maintain full service and replacement parts inventory within 50 miles of the project site.

1.09 EXISTING CONDITIONS

A. Contractor shall be held to have visited the site prior to submitting proposal to determine existing conditions, nature of materials to be encountered and to evaluate other information affecting the work to be performed.

B. Protect and maintain all existing pipelines, conduits, and structures.

C. Do not interfere with their safe operation.

D. Should damage occur notify the appropriate utility and the Network and Engineering Group at phone number 559-457-2540.

E. Damage costs are the responsibility of the contractor.

PART 2 – PRODUCTS

2.01 VoIP EXTENSION CABLING and ANALOG PHONE EXTENSION CABLING

A. The cable shall be Category 6 Cable, UTP, as prescribed in Section 272000 – Data Communications.

2.02 TELEPHONE JACKS

A. Telephone jacks shall meet the requirements of proposed EIA/TIA Category 6 Standard dated 4-9-99 or latest revision.

B. The Jack Termination of a 4-pair, 24 AWG, 100 Ohm, Solid Unshielded Twisted Pair cable shall be accomplished by use of a forward motion cap and shall not require the use of a Punch Down tool.

C. Shall use the 568-A wiring scheme.

D. Shall have characteristics compatible with the Category 6 Patch Panels (Section 16700-2.03), Category 6 Patch Cords (Section 16700-2.07), and Category 6 Cable (Section 16700-2.01 & 2.02) to ensure the specified Channel Link performance can be met.

E. Jack shall also have following additional characteristics (when measured according to proposed Addendum 5 to ANSI/TIA/EIA 568-A dated 8-25-98 or latest revision):

Typical Performance Results in db:

Performance test:	20 MHz	62.5 MHz	100 MHz	200 MHz
NEXT:	>65.0	>58.1	>54.0	>38.0
PS NEXT:	>64.0	>54.1	>50.0	>44.0
FEXT:	>57.1	>47.2	>43.1	>37.1
PS FEXT:	>54.1	>44.2	>40.1	>34.1
ATTENUATION:	<0.10	<0.16	<0.20	<0.28
RETURN LOSS:	>30.0	>26.0	>22.0	>16.0

F. Jacks (VoIP) shall be Panduit #CJ688TPGR (GREEN).

2.05 TELEPHONE JACK PLATES/HOUSINGS/ENCLOSURES

A. Telephone Jack Plates and Housings shall be appropriate for jack type and the location where they are to be used.

B. Telephone Jack Plate and Housings shall be labeled using a numbering schedule specified by the District.

C. Telephone Jack Plates shall be Panduit #ECPG with Panduit #CFG4 frame, and 3 Panduit #CHB2IW-X blank insert.

D. Wall mounted Telephone Jack Plate shall be a Leviton CAT #4108W – 1SP stainless steel phone plate.

E. Wall mounted VoIP telephones require a 1 Ft CAT6 patch cord GREEN in color.

F. Typical school sites have approximately 80 wall jacks and 40 desk jacks.

PART 3 – EXECUTION

3.01 INSTALLATION, GENERAL

A. VoIP and Analog Telephone Service: Comply with telephone utility organization requirements as to details of the telephone service.

B. Distribution System: Install completely so system will be fully operational when telephone instruments and switching equipment are connected.

C. Raceway: Install VoIP and Analog telephone service and distribution raceway where indicated as specified in Division 16 Section, “Raceways.”

D. Programming and cutover of system shall be coordinated in accordance with District standards.

3.02 WIRING INSTALLATION

A. Install cable without damaging conductors or jacket. Do not bend cable to a smaller radius than minimum recommended by manufacturer. Do not exceed manufacturer’s recommended pulling tensions. Pull cables simultaneously where more than one is being installed in the same raceway or at the same location. Use pulling compound or lubricant where necessary. Compound used must not damage conductor insulation. Use pulling methods that will not damage cable or raceway, including fish tape, cable, rope, and wire-cable grips.

B. Wiring Method: Except as otherwise indicated, install wiring in raceway. Conceal raceway, except in unfinished spaces and as indicated.

C. Accessible attic spaces, concealed from view: Install wiring neatly on J-hooks.

D. Cable Taps: Install numbered terminal blocks where cable taps are made in wire closets and cabinets and in junction, pull, and outlet boxes. Install plywood backboards in telephone wire closets and cabinets.

E. Wiring in Wire Closets and Cabinets: Install conductors parallel to and at right angles to walls, Bundle, lace, and train the conductors to terminal points with no excess. Use wire distribution spools at points where cables are fanned or conductors turned. Connect conductors that are terminated, spliced, or interrupted to terminal blocks. Label each terminal with designations approved by the telephone equipment supplier.

F. Conductor Terminations: Terminate conductors of cables on terminal block using tools recommended by terminal block manufacturer.

3.03 GROUNDING

A. Install ground terminal at service location and connect in accordance with Division 16, Section "Grounding."

B. Ground telecommunications equipment with a #6 copper conductor with green jacket. The ground shall be connected to the telecommunications equipment bus bar.

3.04 IDENTIFICATION

A. Identify Telephone system backboards and cabinets with the legend "Telephone." Identify terminals of terminal strip and jack outlets and pull and junction boxes with approved designations. Perform all identification in accordance with Division 16, Section "Electrical Identification."

3.05 FIELD QUALITY CONTROL

A. Test Notice: Provide at least 10-days' notice in writing when the system is ready for final acceptance testing.

B. Testing: Upon completion of installation and programming, demonstrate to the District's Telecommunications Department, architect and project inspector proper function of each of the programmed features. Final installation shall be free of hum, cross-talk, static or noise from other links or non-designated units.

C. Acceptance Tests: Include the following for each pair or conductor of each cable run.

1. Continuity of pair loop.
2. Insulation resistance for pair loop. Use 500 V megger. Report evaluation of readings less than 1 mega ohm.
3. D.C. Loop Resistance: Compare measured value with calculated resistance for each pair loop. Report evaluation of differences greater than three percent.
4. Upon completion of installation, demonstrate to Architect and project inspector, proper function of each of the programmed features. Final installation shall be free of hum, cross-talk or noise from other links or non-designated units.

D. Retesting: Correct deficiencies indicated by tests and completely retest work affected by such deficiencies. Verify that the total system meets the Specifications and complies with applicable standards.

E. Report of Tests and Inspections: Prepare a written record of inspections, tests, and detailed test results in the form of a test log.

F. Tag all cables, terminal blocks, outlets, and other components for which tests have been satisfactorily completed.

3.06 TYPICAL COMMUNICATIONS BACKBOARD INSTALLATION

A. Provide 110 VAC dedicated circuit for PBX use only.

B. Install 2-inch “D” rings at 6-inch intervals on 10 each, 25 pair beige cables to be terminated on left side o M150 66 block. Each block to be labeled appropriately with black Sharpee pen.

C. Install “Full Blue” backboard, Part #183B1, for termination of PBX, field station and distribution cables.

D. Install 4-inch “D” rings at 6-inch intervals on field station and distribution cables.

E. Install “Full White” backboard, Part #187C1, for jumper wire distribution.

F. Install “Half Blue” backboard, Part #183B1, for termination of PBX field station and distribution cables.

G. Install “Half White” backboard, Part #187C1, for jumper wire distribution.

H. Provide 2-inch service loop on each jumper wire termination.

I. Field station and distribution cables specified colors will be used. Voip phones will be GREEN, DATA will be BLUE

J. Contact Network and Engineering Department at (559) 457-2540 for any questions.

3.07 TYPICAL 24” X 24” FIELD TERMINAL BOX (see attached drawing)

A. Install distribution posts evenly spaced for jumper wire distribution.

B. Bridging clips to be used between field station and distribution cables.

C. Distribution cables going back to main terminal room to be always punched down on left side of M150 66 block without stand-off installation bracket.

D. Provide 2-inch service loop on each jumper wire termination.

E. Field stations and distribution cables must be beige in color.

F. Contact Network and Engineering Department at (559) 457-2540 for any questions.

3.08 TYPICAL 12” X 18” FIELD TERMINAL BOX (see attached drawing)

A. Install distribution posts evenly spaced for jumper wire distribution.

B. Bridging clips to be used between field station and distribution cables.

C. Distribution cables going back to main terminal room to be always punched down on left side of M150 66 block without stand-off installation bracket.

D. Provide 2-inch service loop on each jumper wire termination.

E. Field stations and distribution cables must be beige in color.

F. Contact Network and Engineering Department at (559) 457-2540 for any questions.

END OF SECTION

FRESNO UNIFIED SCHOOL DISTRICT
REV DATE: UNKNOWN

SECTION 27 51 00 – PUBLIC ADDRESS AND CLOCK SYSTEMS

PART 1 - GENERAL

1.1 RELATED DOCUMENTS

A. Drawings and general provisions of the Contract, including General and Supplementary Conditions and Division 01 Specification Sections shall form a part of this Section, with the same force and effect as though repeated here.

1.2 SCOPE

A. Basis of Design for the Intercommunication system: The intercommunication system design is primarily based on the use of an analog type intercommunication system.

1. The Contractor shall provide, install, connect, test, label and place into operation a complete intercommunication system in accordance with the requirements of the California Code of Regulations Title 24, Part 6, and as herein specified.

2. Provide intercommunication system equipment as indicated by drawings, schedules, and as specified herein, limited to loudspeakers/horns, speaker enclosures and back boxes, baffles, mounting brackets, supports and tile bridges, conduit, wiring, terminal blocks and call buttons.

3. Headend intercommunication system equipment is excluded from the scope of this project. Headend intercommunication system equipment and shall be provided and installed by the Fresno Unified Maintenance Department.

B. Basis of Design for the Clock system: The clock system design is primarily based on the use of a wireless master clock system.

1. The Contractor shall provide, install, connect, test and place into operation a complete wireless clock system in accordance with the requirements herein specified.

2. Provide wireless clock system equipment as indicated by drawings, schedules, and as specified herein, including but not limited to master clock, wireless transmitters and wireless analog clocks.

1.3 COORDINATION

A. Confirm interface of intercommunication system with local area network and telephone system. Report discrepancies to the Architect or Electrical Engineer.

B. Coordinate to avoid conflicts between supports, fittings, and mechanical equipment.

C. Coordination Drawings, Required: Prepare coordination drawings including plans, elevations, sections, and details of the work for each trade representing the work that will be installed. Clearly indicate and identify conflicts between components for review by the Architect. Provide Coordination Drawings as follows:

1. Overhead Work and Work Above Finished Ceilings: Include subframing for support of ceiling and wall systems, conduit and piping runs, plumbing, mechanical, and electrical equipment, and related Work. Locate components to accommodate layout of all ceiling mounted devices and equipment indicated on the Drawings. Show the work of each trade including, but not limited to, pipe runs, mechanical ductwork, cable trays, conduit runs, cabling and bracing and supports.
   a. Indicate locations of all junction and outlet boxes, dampers, valves, cleanouts and other devices requiring human access for maintenance and repair. Where access panels are required, show locations and indicate size.
   b. Show the height above finish floor for each item, demonstrating sufficient space for installation and maintenance. Indicate sizes of ducts, piping and similar items.
   c. Layout of work shall be done in such a manner to avoid conflicts between the work of different trades, finish ceiling heights, soffits, light fixtures or other finish work at ceilings and soffits.
   d. Should unavoidable conflicts occur that affect finish ceiling and soffit heights, methods of installations, methods of construction or means of accessibility, the contractor shall clearly identify each location for review by the Architect.

1.4 SUBMITTALS

A. Submittals for this Section shall be made according to the Conditions of the Contract, Division 01 Specification Sections and Division 27 Specification Sections.

B. Shop Drawings:

1. Composite wiring and/or schematic diagram of each control circuit as proposed to be installed.

2. Show exact location of all digital devices, including at minimum sensors, room controllers, and switches for each area on reflected ceiling plans.

3. Provide room/area details including products and sequence of operation for each room or area. Illustrate typical acceptable room/area connection topologies.

4. Network riser diagram including floor and building level details. Include network cable specification and end-of-line termination details, if required. Illustrate points of connection to integrated systems. Coordinate integration with mechanical and/or other trades.

C. Product Data: Catalog sheets, specifications and installation instructions.

D. Include data for each device which:

1. Indicates where speaker and call button are proposed to be installed.

2. Prove that the sensor is suitable for the proposed application.

1.5 QUALITY ASSURANCE

A. Intercommunication system equipment and wiring shall be installed and tested by State of California certified Voice Data Video Technician installers that have held their certification no less than 3-years.

B. All electrical components, devices and accessories shall be listed with Underwriters Laboratories, Inc. (or other testing agency acceptable to authorities having jurisdiction), shall meet their requirements, shall bear their label wherever standards have been established and label service is regularly furnished by that agency, and shall be marked for intended use.

1.6 CODES AND STANDARDS

A. All work and materials shall fully comply with current rules and regulations of all applicable codes. Nothing in these Drawings or Specifications shall be interpreted as to permit any work not in compliance with these codes. Where work is detailed and/or specified to a more restrictive standard or higher requirement, that standard or requirement shall govern such work. Installation shall comply with the following codes and standards:

1. California Code of Regulations (CCR)

a. Title 8, Industrial Relations

b. Title 17, Public Health
c. Title 24, Building Standards

2. 2016 California Building Code.

3. 2016 California Fire Code.

4. 2016 California Electrical Code.

5. Local Codes.

6. ANSI/TIA/EIA-568-C-2012 Commercial Building Telecommunications Standard

7. ANSI/TIA/EIA-569-C-2012 Commercial Building Standard for Telecommunications Pathways and Spaces

8. ANSI/TIA/EIA-606-B-2012 Administration Standard for Telecommunication Infrastructure of Commercial Buildings

9. ANSI/TIA/EIA-607-B-2013 Grounding and Bonding Requirements for Telecommunications in Commercial Buildings

10. BICSI TDMM Telecommunications Distribution Methods Manual 12th Edition

11. NEMA VE1 Cable Tray Systems

12. NEMA VE2 Cable Tray Installation Guides

13. UL 467 Grounding and Bonding Equipment.

14. UL 1479 Fire Tests of Through-Penetration Firestops

1.7 WARRANTY

A. The Warranties specified in this Article shall not deprive the Owner of other rights the Owner may have under provisions of the Contract Documents and shall be in addition to, and run concurrent with, other warranties made by the Contractor under requirements of the Contract Documents.

B. Provide five-year manufacturer's warranty on all intercommunication system equipment and wiring.

PART 2 - PRODUCTS

2.1 MANUFACTURERS

A. This intercommunication system design is based on the use of equipment manufactured by Atlas Sound and Bogen. Subject to compliance with project requirements equivalent products may be considered.

B. This wireless clock system design is based on the use of equipment manufactured by Sapling. Subject to compliance with project requirements, equivalent products by one of the following manufacturers may be considered:

1. Sapling;

2. Approved equivalent;

2.2 HEADEND EQUIPMENT

A. Headend equipment shall be provided and installed by the Fresno Unified Maintenance Department and are not included in the scope of work.

2.3 SPEAKERS

A. Indoor Speakers

1. Ceiling mounted speakers shall consist of the following components:

a. Baffle - Round Recessed Baffle for 8” loudspeaker with concealed loudspeaker mounting studs. Two-piece corrosion resistant steel construction with textured white finish. Atlas Sound model: 61-8W
b. Speaker Enclosure – Round recessed enclosure for 8” loudspeaker with four 1/2”-3/4” knockouts, four j-clips and two flexible perforated mounting straps. One-piece corrosion resistant steel construction with undercoat and epoxy finish, patch-jute lined. Atlas Sound model: CS95-8
c. Tile Bridge – Load-bearing tile bridge for 8” loud speaker. Rust-resistant 22-gauge electrogalvanized steel construction. Atlas Sound model: 81- 8R
d. Loudspeaker – 8” dual cone loud speaker with transformer. Atlas Sound model: C10AT72

2. Wall mounted combination clock/speakers shall consist of the following components:

a. Baffle - Recessed Clock/loudspeaker Baffle for 8” loudspeaker with concealed double-action torsion spring. Featuring a corrosion resistant

steel grille and trim ring mounted to an 18-guage corrosion resistant steel panel with cutouts for mounting an 8" diameter loudspeaker and a universal analog clock mounting bracket. White epoxy finish. Atlas Sound model: 830-812A

b. Loudspeaker – 8" dual cone loud speaker with transformer. Atlas Sound model: C10AT72

c. Clock – Wireless analog clock with microprocessor-based movement. Each wireless clock shall have an internal antenna and act as a repeater and transmitter. Wireless clocks shall implement 915-928MHz frequency hopping technology and have a diagnostic mode and quick correction (within 5-minutes). Sapling model: SAL-2; Provide and install two Duracell ProCell Type D batteries in each clock.

B. Gymnasium Speakers

1. Speakers located in Gymnasiums shall consist of the following components:

a. Baffle – Vandal-resistant Square Recessed Baffle for 8" loudspeaker with concealed loudspeaker mounting studs. Special aluminum alloy construction with textured white finish. Atlas Sound model: VP161A-APF

b. Speaker Enclosure – Square surface mount enclosure for AFP series horns with conduit knockout and mounting holes located in the top. Atlas Sound model: L20-213

c. Loudspeaker – 15-watt omni-purpose flange-mount loudspeaker with transformer and double–re-entrant design. Atlas Sound model: APF-15T

C. Relocatable Classroom Speakers

1. Speakers located in Relocatable Classrooms shall consist of the following components:

a. Loudspeaker – Surface mounted combination loudspeaker transformer baffle design. Atlas Sound model: WD417-72 + 50-ohm pos volume control.

D. Exterior Speakers

1. Exterior Speakers shall consist of the following components:

a. Single and Twin Reentrant Loudspeakers – 30-watt, weatherproof all metal construction, designed for one-way or two-way communication. Rotary tap impedance selector, tilt and swivel base for positioning with mounting bracket and screw terminals for mounting. Bogen model:

SPT30A (single), BDT30A (twin);

b. Mounting strap – Mounts to electrical box. Bogen model: HSES10

c. Terminal Cover – Allows connection of conduit fitting to horn speaker. Bogen model: TCSPT1

2.4 CONDUIT AND WIRING

A. Conduit - All intercommunication system cable and wiring shall be in EMT or RMC type conduit. Refer to Specification Section 16050 for conduit specifications.

B. Wiring –

1. Wiring from terminal block to speaker: 2-pair, 22AWG stranded copper conductors with 1-pair (black, red) shielded and 1-pair (white, green) unshielded having an overall gray PVC jacket. CEC rating CMR, CEC Article 800, UL Listed. UL 1666 Riser Flame Test flame rating. RoHS compliant. CEC rating CMR, CEC Article 800, UL Listed. UL 1666 Riser Flame Test flame rating. RoHS compliant. West Penn model: 357

2. Wiring between terminal blocks: multi-pair, 22AWG solid annealed copper individually insulated conductors twisted into pairs with non-hygroscopic dielectric tape core wrap shielded with an overall corrugated copolymer coated 8-mil aluminum tape applied longitudinally with an overlap and having an overall black polyethylene jacket marked with pair count, AWG and sequential length markings at two foot intervals Superior Essex SEALPIC models: 01-059-40 (12-pair); 01- 062-40 (25-pair); 01-065-40 (50-pair); 01-069-40 (100-pair);

3. Call Button: West Penn #357 between speaker and call button location.

C. Terminal Blocks - Intercommunication system terminal blocks shall have Category 5e S66 style clips for terminating 22-26 AWG solid insulated cable or 18-19 AWG solid stripped cable. High impact flame retardant thermoplastic with fanning strips for cable management and labeling. Siemon model: S66M1-50

2.5 CALL BUTTONS

A. Call button locations shall be rough-in only and shall be located at teacher/staff work stations. Provide rough-in for one call button in each classroom and office. Call button rough-in shall consist of a single-gang metal low-voltage mounting plate flush mounted to the finished wall with a blank stainless steel cover plate installed and one West Penn #357, 4#22AWG stranded tinned copper conductors (2) shielded + (2) unshielded with overall jacket run from the nearest intercommunication system speaker to the call button rough-in location and labeled “FUTURE CALL BUTTON”.

2.6 WIRELESS MASTER CLOCK SYSTEM

A. Master Clock – The wireless master clock system shall be the SMA Series Master Clock (V8) with LED readout, wall mountable, (S)NTP Input with ten programed server addresses and DHCP. The wireless master clock shall interface with 59- and 58-minute correction, National Time and Rauland, and Dukane digital and have 12- or 24-hour modes. The wireless master clock shall have bias seconds output adjusting the time plus or minus a few seconds or minutes to fit your application while still receiving input from another source. The wireless master clock shall have an RS485 input and output for time correction and synchronization, two relays for simultaneous correction of two synchronous-wired clock systems. The master clock system shall be microprocessor based with ten-year battery backup for time keeping and have web interface software installed that allows control of all the IP settings through an intuitive graphical user interface that allows configuration of all settings of the SMA. The master clock shall also include GPS input feature, a wireless transmitter/repeater for correction of SAL-2 series analog clocks and the (S)NTP server software upgrade to allow interface with other devices. Sapling model: SMA-2S0-1100-1

B. Wireless Clock – The wireless analog clock shall be compatible with the Sapling SMA Series Master Clock (V8) with microprocessor-based movement. Each wireless clock shall have an internal antenna and act as a repeater and transmitter. Wireless clocks shall implement frequency hopping technology and have a diagnostic mode and quick correction (within 5-minutes). Sapling model: SAL-2; Provide and install two Duracell ProCell Type D batteries in each clock.

PART 3 - EXECUTION

3.1 ELECTRICAL INSTALLATION

A. All material, equipment, devices, etc., shall be installed in accordance with the recommendations of the manufacturer of the particular item. The Contractor shall be responsible for all installations contrary to the manufacturer's recommendations. The Contractor shall make all necessary changes and revisions to achieve such compliance, with FUSD Electronics shop approval. Manufacturer's installation instructions shall be delivered to and maintained at the job site throughout the construction of the project.

B. The layout and installation of electrical work shall be coordinated with the overall construction schedule to prevent delay in completion of the project.

C. Dimensions and information regarding accurate locations of equipment and structural limitations and finish shall be verified with other sections.

D. The drawings do not show all raceway, wiring, offsets, bends, special fittings, junction or pull boxes necessary to meet job conditions. Items not shown as indicated, where are clearly necessary for proper operation or installation of systems shown, shall be provided as required, at no increase in contract price.

E. Materials and Components shall be installed level, plumb, and parallel and perpendicular to other building systems and components, unless otherwise indicated.

F. Electrical equipment, outlets, junctions and pull boxes shall be installed in accessible locations, avoiding obstructions, preserving maximum headroom, and keeping openings and passageways clear.

G. Equipment shall be installed to facilitate service, maintenance, and repair or replacement of components. It shall be connected for ease of disconnecting, with minimum interference with other installations. Minor adjustments in the locations of equipment shall be made where necessary providing such adjustments do not adversely affect function of the equipment. Major adjustments for the location of equipment shall be previously approved and detailed on the Record Drawings.

H. Right of Way shall be given to raceways and piping systems installed at a required slope.

I. All cables shall be labeled at both ends with vinyl cloth printed wire marker (Brady #PWM-PK-1). Label shall identify the room number where the speaker is located.

J. All cables shall be neatly bundled together and dressed in a terminal cabinet. Provide a maintenance loop behind punch blocks on a mounting bracket.

K. Conductors shall be terminated in the following orders:

1. West Penn #357: 1) Shield; 2) Black; 3) Red; 4) Green; 5) White

2. Superior Essex SEALPIC:

a. Major: 1) White; 2) Red; 3) Black; 4) Yellow; 5) Violet
b. Minor: 1) Blue; 2) Orange; 3) Green; 4) Brown; 5) Slate

3.2 TESTING

A. After installation of the intercommunication system the Contractor shall perform testing of the complete intercommunication system in the presence of the Commissioning agent and shall make adjustments to the pre-installation speaker tap settings to achieve the following performance results:

Area Type	Required Performance Results	Pre-installation Tap Setting
Classroom	75-80 dB	0.5-watts
Hallway	85-95 dB	2.5-watts
Large Rooms (Gymnasium, Cafeteria, MPR)	95-100 dB	7.0-watts
Outside (40-50 feet from speaker)	110-115 dB	15.0-watts
Restrooms	45-55 dB	0.25-watts

B. Performance results listed above shall be measured from the center of the area type for indoor spaces.

END OF SECTION

SECTION 28 1300 - ELECTRONIC ACCESS CONTROL

PART 1 - GENERAL

1.1 SUMMARY

A. The work consists of providing and installing prescribed systems and equipment, in accordance with the Owner's directives and needs. The Contractor shall design, install, and configure systems to provide the exact function described herein and will be held to the operational criteria. Contractor shall be responsible for providing and installing a complete and fully operational system, with the intended features and capabilities, whether or not all required parts, components, systems or accessories are specified in the construction documents. Contractor shall provide all required parts, components, systems, materials and accessories needed for a complete and working system, without additional cost to the owner.

B. Furnish all labor, materials, tools, equipment, and services for all Access Control Equipment, as indicated, in accord with provisions of Contract Documents. Final terminations and system commissioning to be performed by a factory certified technician. Systems and the respective specification sections which are part of this section include but are not limited to the following:
   1. Reader Controller
   2. Reader Interface
   3. Power Supply
   4. Card Readers
   5. Wiring, switches and ancillary equipment

C. Although such work is not specifically indicated, provide and install supplementary or miscellaneous items, appurtenances and devices incidental to, or necessary for, a sound, secure and complete installation.

D. Training on operation and software of the access control system per Section 3.7 of this specification section.

1.2 INTENT OF ACCESS CONTROL SPECIFICATION

A. The following specification shall be considered as coordinated with the general conditions, special conditions and the preamble of this and other related sections. It shall be the Security Contractor's responsibility to furnish all necessary systems and equipment, in accordance with the Owner's directives and needs.

B. Where items aren't definitely or correctly specified and are required for completion of the work, a written statement of such omission, error, or other discrepancy shall be sent to the Architect, prior to date specified for receipt of bids for clarification by addendum; or, furnish such items in the type and quality established by this specification, and appropriate to the service intended.

C. Adjustments to the Contract Sum will not be allowed for omissions not clarified prior to bid opening.

1.3 QUALITY ASSURANCE

A. Requirements of Regulatory Agencies:
   1. Furnish security equipment to comply with the requirements of laws, codes, ordinances, and regulations of the governmental authorities having jurisdiction where such requirements exceed the requirements of the Specifications.
   2. Furnish security equipment to comply with the requirements of American National Standards for Making Buildings and Facilities Accessible to and Usable by Physically Handicapped People (ICC/ANSI A117.1), the governmental authority having jurisdiction and to comply with Americans with Disabilities Act.
   3. System supplier must be certified by Verex, the equipment manufacturer, for installing, supporting and servicing the products to be furnished. Certification shall be submitted on the equipment manufacturer's letterhead.

B. Contractor qualifications:
   1. Company that is trained, authorized, and certified to install the specified products.
   2. Company with a minimum of 5 (five) years system design, engineering supervision, and installation experience in the access control industry.
   3. The contractor will maintain a fully staffed local office within 150 miles of the work site. The service center will be staffed by factory trained technicians and must be adequately equipped to provide emergency phone service within twenty four (24) hours on a twenty-four (24) hour, 365 days per year basis, whether or not the owner purchases a maintenance contract with the contractor.
   4. Within the local service center, the contractor must maintain an inventory of spare parts and other items critical to system operation and as necessary to meet the emergency service requirements.
   5. The contractor must have in-house engineering and project management capability consistent with the requirements of this project. The contractor shall provide a project manager who is actively in the project. This person shall be the same individual throughout the course of the project and shall be the person responsible for the scheduling of the system programming, preparation of the Operation and Maintenance Manuals, Training Programs, documentation and system testing, maintenance of Drawings and the coordination of all subcontract labor. The owner reserves the right to approve the contractor's Project Manager.
   6. The contractor must abide by and adhere to all Drug Free School Zone laws and participate in a drug-free workplace program.

C. Testing Agency: Electrical Components, Devices, and Accessories: Listed and labeled as defined in NFPA 70, Article 100, by a testing agency acceptable to authorities having jurisdiction, and marked for intended use.

D. Pre-Installation Conference: Prior to installation arrange conference between supplier, and related trades to review materials, procedures, and coordinating related work.

E. Sequencing: The work shall be performed in the following sequence, unless directed otherwise by owner's representative:
   1. Installation of all conduit and rough-in boxes
   2. Installation of wiring
   3. Installation of Access Controllers, Modules & Power Supplies
   4. Installation of new field devices and new readers/network locks
   5. Connection to site control & front end equipment.

6. Commissioning of the new system components.
7. End User training

F. The Authorized Dealer will provide pricing for 1 year warranty from date of purchase.

1.4 PROJECT SUMMARY

A. These specifications describe the requirements, performance parameters, and operating considerations for the installation of electronic access control systems.

B. The intent of this project will be to secure perimeter access doors/points using the access control readers and software by Verex.

1.5 WARRANTY

A. All work and system components shall be covered by a one (1) year 'in field' warranty against defects in materials and workmanship, commencing with substantial completion of the project, unless otherwise directed by owner or their representative.

B. During system warranty period, system updates are to be made available to owner at no charge to owner.

C. During warranty period, provide twenty-four (24) hour toll-free technical support.

1.6 SUBMITTALS

A. Under the provisions of this request for proposal, prior to the start of work the contractor shall:
1. Submit copies of the certification of the company and names of staff that will be performing the installation and termination of the installation to provide proof of compliance of this spec.
2. Submit proof from manufacturer of contractor's good standing in manufacturer's program.
3. Submit appropriate cut sheets and samples for all products, hardware and cabling.
4. Shop drawing of equipment connections, point-to-point diagrams, etc. sufficient to describe the operation of the system. Telecommunications Contractor shall include equipment listed by other trades and shall provide at submittal time.

B. Work shall not proceed without the Owner's approval of the submitted items.

C. The telecommunications contractor shall receive approval from the Owners on all substitutions of material. No substituted materials shall be installed except by written approval from the Owner.

D. If a submittal is provided without shop drawings, an immediate "Revise and Re-submit" shall be issued back to Contractor.

PART 2 - PRODUCTS

2.1 MANUFACTURERS

A. Access Control System Hardware/Firmware/Software:
   1. Security Management System (SMS) as manufactured by Verex. (No substitutions per District standard)

2.2 SYSTEM PROGRAMMING

A. The contractor shall furnish and install all hardware, software, devices and components to meet the performance and functional requirements described in these contract documents. Include all items required, whether or not individually specified, to ensure a completely operational integrated Security Protection system. The contractor must complete all database entry (unless directed otherwise by owner or their representative), and provide the owner with training on cardholder entry, as well as all system programming. No additional costs shall be allowed to make the system operational or to meet specifications.

2.3 SYSTEM ARCHITECTURE

A. System Description:
   1. Primary function is to regulate access through specific portals to Secured areas.
   2. Utilize card technology as its primary access device.
   3. Surge Protection Components must be protected from voltage surges originating externally to equipment housing and entering through power, communication, signal, control, or sensing leads. Must also include surge protection for external wiring of each conductor-entry connection to components.
   4. Power: Any special power treatment required, such as filtering or spike elimination that may be required for proper operation and protection of the ACS, shall be provided with the system. Step down power supply with battery backup of at least 4 hours.

2.4 SYSTEM HARDWARE

A. Reader Controllers: Reader Controller as manufactured by Verex
   1. The reader controllers shall be independently programmed, intelligent devices, which shall be able to make decisions and store transactions at the local level. The system shall provide reader controllers for one read head or up to 16 reader capacity, and field configurable by standard system software. Capable of being fully networked into TCP/IP, LAN/WAN network connectivity. Downstream communication shall be done through RS-485. Enclosure to be lockable NEMA rated. Downstream communication via RS-485 connects directly to the following devices as necessary for total system operation:
      a. Reader interface
      b. Input/output board
      c. Monitor module
      d. Relay output module
      e. Scalable for multiple door/closure interfaces
   2. Specifications:

a. The controller shall allow for full control of downloaded Area Access and Credential Database when network communication is lost
b. Enhanced Offline Mode to cache up to 1,000,000 transactions
c. Auto Upload to the CIM once connection is restored
d. Non-volatile memory storage of 20,000 transactions in the event of power loss
e. Prioritized cached transaction uploads so all Alarm transactions are uploaded upon restoration before non-Alarm transactions
f. Up to 16 input device channels
g. Up to 16 supervised or non-supervised inputs
h. Up to 16 SP/DT relays
i. Flashable Firmware
j. 64 MB RAM for ID capability
k. Power requirements 24 VAC @ 14 amps
l. UL Listed for UL294
m. RoHS compliant

B. Readers
1. District standard unless otherwise noted.

PART 3 - EXECUTION

3.1 SYSTEM PROGRAMMING

A. The Contractor shall work with the owner to ensure that the new components will be properly programmed into the new and/or existing system.

B. Coordination required is as follows, unless directed otherwise by owner or their representative;

C. Personal/staff information.

D. Access time for all personal /staff.

E. Definitions of openings for staff access

F. Holiday definition

G. Special access privileges

H. Lock down conditions

3.2 OWNER PERSONNEL TRAINING

A. On Site Operator training: instruct operating staff in proper operation, including hands-on training.

B. Minimum of four (4), man-hours covering the operations for each system installed.

C. Training sessions shall be provided to supervisors, staff utilizing systems and equipment provided under this section, maintenance personnel and any other personnel designated by the owner. Security Contractor should prepare to provide operator training for up to ten (10) personnel.

D. Security contractor shall be prepared to provide training sessions on all work shifts, including day, evening and night shifts.

E. On Site Administrator training: instruct owner-designated security system administrators for each system installed.

F. Minimum of four (4), man-hours of training for each owner-designated individual.

G. Training to cover all administrative and management functions, features and controls for each system.

H. Refresher training: provide a 90-day refresher training session to operators and administrators.

I. Minimum of four (4) hours of training for each owner-designated Operator and/or Administrator.

J. Training shall cover summaries of all operator and administrator training topics and shall include greater detail on subject areas or operations not yet mastered by operators or administrators.

K. Review in detail all information in the operations and maintenance manuals for each system provided.

L. Prior to administering the above training, the contractor(s) shall prepare an outline of the training, identifying the goals and expectations of the course and detailing what students are expected to learn.

M. Training courses shall be videotaped for subsequent training use by the Owner.

END OF SECTION 28 1300

FRESNO UNIFIED SCHOOL DISTRICT
REV DATE: 01/19/11

SECTION 28 16 00 – INTRUSION DETECTION

PART 1 – GENERAL

1.01 APPLICABLE PUBLICATIONS:

A. The publications listed below form a part of this specification to the extent referenced. The publications are referred to the text by the basic designation only.

1. National Fire Protection Association (NFPA) Publication: 2016 California Electrical Code (CEC).
2. State of California: Title 19-California Code of Regulations Title 24-Building Standards.

1.02 RELATED WORK:

A. Section 260000 – Electrical.

1.03 SUBMITTALS AND TRAINING:

A. All submittals shall be made in accordance with Section 013300.

B. The Contractor shall provide two sets of system submittals and Shop Drawings for review and approval within 35 days after date of Award of the Contract. The submission shall consist of five major sections with each section separated with insertable index tabs. The first section shall be the index which shall include the project title and address, name of the firm submitting the proposal and name of the Architect/Engineer. Each page in the submission shall be numbered chronologically and shall be summarized in the index. The second section shall include a copy of the authorized distributor's valid C-7 California State Contractor's license, letter of factory authorization and guaranteed service, list of projects of equal scope and lists of proposed instrumentation to be used by the Contractor. The third section shall contain the comparative Specifications listing, including a complete listing of the characteristics of the equipment to be furnished. The fourth section shall contain an original factory data sheet for every piece of equipment in the Specifications. The fifth section shall contain a wiring designation schedule for each circuit leaving each piece of equipment.

C. Contractor System submittals and Shop Drawings shall include, but not be limited to, the following:

1. A complete list of equipment and materials proposed for the system with catalog cuts, technical data, manufacturer's Specifications and detail drawings.
2. A complete set of detailed scaled drawings of all racks and cabinets with all designations, dimensions, color, operating controls, instrument wiring and schematic diagrams of all circuits.
3. The power loads of the systems shall be calculated on separate sheets and shall be included in the submittal. Also, include a dimensional Shop Drawing of the unit

nameplate. The nameplate shall contain school name, firm address, acceptance data and power load.

4. Drawings shall show interfaces to all equipment furnished or not by other contractors identifying numbers of wires, termination requirements, voltages and other pertinent details. Include front elevations, cabinet dimensions, types of mounting, door barriers, catalog number of locks and finishes of terminal cabinets.

D. Operating and Service Manuals: As-Built Record Drawings:

1. Deliver three copies of operating and servicing manuals. Each complete manual shall be bound in a flexible binder and all data shall be typewritten or drafted.
2. Each manual shall include all instructions necessary for the proper operation and servicing of the systems and shall include complete circuit diagrams of the systems, a wiring destination schedule for each circuit leaving the console and each rack, a schematic diagram of all components, and replacement part numbers. Each manual shall also include the as-built cable site plot drawing and floor plan drawings showing all equipment, devices, cables (both underground and in each building) with the conduit and the as-built coding used on each cable.

1.04 QUALITY ASSURANCE:

A. To qualify as a bidder, the manufacturer's representative shall hold a valid State of California C-7 or C-10 license; shall have completed at least 10 projects of equal scope; and shall be capable of being bonded to assure the District of performance and satisfactory service during the guarantee period.

B. All mechanical, electrical and general information set forth on the respective data sheets for each specified item shall be considered part of these Specifications and binding herein. Any proposed equal items offered shall be substantiated fully to prove equality. The District reserves the right to require a complete sample of any proposed equal item and may, if necessary, request a sample tested by an independent testing laboratory to prove equality. The decision of the District regarding equality of proposed equal items will be final.

C. All equipment and wiring shall be installed by individuals holding a "Voice Data Video Technician" certification from the State of California division of apprenticeship standards.

D. The Contractor shall furnish a letter from the manufacturer of the equipment, not furnished by the District, which certifies that the equipment has been installed according to factory recommended practices and that the system is operating satisfactorily. The Contractor shall also furnish a written unconditional guarantee, guaranteeing all parts and labor for a period of two years after final acceptance of the project by the District.

E. The Contractor shall provide not less than eight hours of instruction of personnel in the operation and maintenance of the systems. This instruction time shall be divided as directed by the District. Contact FUSD Electronics at 559-457-3093 to coordinate.

1.05 SCOPE OF WORK:

A. Furnish and install a complete Intrusion Detection / Access Control system with the performance criteria detailed in this specification. The system shall be inclusive of all necessary functions, monitoring, and control capability as detailed herein and on accompanying Shop drawings, which may includes, but not be limited to:

1. On-site or remote video monitoring
2. Heating, air conditioning, and lighting management
3. Temperature threshold detection and monitoring
4. Humidity threshold detection and monitoring
5. Pressure threshold detection and monitoring
6. Power loss detection and monitoring, generator switching
7. Leak detection and monitoring
8. Carbon Monoxide detection and monitoring
9. Tank level threshold detection and monitoring

B. This specification document provides the requirements for the installation, programming, and configuration of a complete Command Processor Panel. This system shall include, but not be limited to:

1. Control panel
2. System cabinet
3. Power supply
4. Digital Signaling Line Circuits (SLC)
5. Annunciator/keypad bus
6. Batteries
7. Wiring
8. Conduit
9. Associated peripheral devices

1.06 WARRANTY:

A. The entire system shall be guaranteed free of mechanical or electrical defects for a period of two years after final acceptance of the installations. Any material showing mechanical or electrical defects shall be replaced promptly at no expense to the District.

B. The Contractor shall provide a two-year guarantee of the installed systems against defects in material and workmanship. All labor and materials shall be provided at no expense to the District. Guarantee period shall begin from the date of final acceptance by the District.

PART 2 – PRODUCTS

2.01 REFERENCES:

A. The system shall be listed as a Power Limited Device and be listed under the standards in this section. Each system shall be supplied with complete details on all installation criteria necessary to meet all of the listings.

B. Underwriters Laboratories (UL):

1. UL 365 Police Connect Burglar
2. UL 609 Local Burglar
3. UL 1023 Household Burglar Alarm System Units
4. UL 1076 Proprietary Burglar
5. UL 1610 Central Station Burglar Alarm Units
6. UL 1635 Digital Burglar Alarm Communicator System Units
7. UL 864 Control Units for Fire Protective Signaling Systems
8. UL 985 Household Fire Warning
9. UL 294 Access Control System Units

C. California Code of Regulations:

1. Title 24, Part 3 – 2007 California Electrical Code

D. National Fire Protection Association (NFPA):

1. NFPA 70 National Electric Code (NEC)
2. NFPA 72 Local Protective Signaling
3. NFPA 72 Remote Station Protective Signaling
4. NFPA 72 Proprietary Protective Signaling
5. NFPA 72 Household Fire Warning

E. U.S. Government Standards / Listings:

1. DCID 6/9
2. DoD/NIST SCIF Standards

2.02 SYSTEM DESCRIPTION:

A. General:

1. The system areas and zones shall be programmable, and the system shall store, log, display, and transmit specific custom designations for system areas, zones, and user names.
2. The system controller, user interfaces, zone input devices, relay output devices, and the system signal receiving equipment shall be engineered, manufactured, assembled, and must be distributed from a location within the United States of America.

3. The system shall support user interaction by way of a keypad, web browser, system software, key switch, or radio frequency wireless control, using integrated or auxiliary devices provided by the system manufacturer.
4. The system shall support controller zone input connections, system keypads, system zone expansion modules, and wireless zone input modules, and must support zone input connections by way of at least two competitive products. The system shall offer a seamless integrated compatibility with hard-wire and/ or wireless zone expansion equipment for at least 200 wireless zones and/ or a maximum of 574 hardwired zones.
5. The system shall be capable of offering at least five zone expansion buses, each of which can support the connection of up to 15,000 feet of four-wire cable. Zone expansion and keypad data buses that exceed 2,500 feet of cable must include splitter/repeater modules to boost data voltage and maintain data integrity.
6. The system shall provide a seamless capability to provide a minimum of 500 addressable relays, which can be located at any connection location upon a zone expansion bus.
7. System relay outputs shall have the capability of being triggered as a result of a command from the user interface, changes in system status, changes in zone status, or by a programmable schedule.
8. System relay output states shall be programmable for momentary, maintained, pulsed, or must follow the state of an associated system zone input.
9. The system shall be completely programmable either locally from a keypad or remotely through a standard dial-up, and network connections by way of a LAN, WAN, and/or by way of the Internet.
10. The control unit shall be completely programmable remotely using remote annunciators, and/ or using upload/ download software that communicates using SDLC 300 baud, 2400 baud, or IP Addressed data network. On-site programming from a personal computer shall also be permitted.

B. Input/Output Capacity:

1. This system shall be capable of monitoring a maximum of 574 individual zones and controlling a maximum of 502 output relays.
2. The control panel shall have, as an integral part of the assembly, 2 SPDT Form C relays rated at 1 Amp at 30 VDC and four open collector 12 VDC outputs rated at 50mA each. It shall also have the capacity of a maximum of 125 output expander modules with 500 switched ground, open collector outputs, 50mA maximum and 502 auxiliary relays (Form C rated at 1.0 Amp at 30 VDC).
3. The panel shall also provide 100 programmable output schedules, and include an integral bell alarm circuit providing at least 1.5 Amps of steady, pulsed, or temporal bell output. Output type shall be programmable by zone type. Relays and voltage outputs shall be capable of being independently programmed to turn on and/or off at selected times each day.

C. User/Authorization Level Capacity:

1. The system shall be capable of operation by 10,000 unique Personal Identification Number (PIN) codes with each code having one (1) of ninety-nine (99) custom user profiles. This allows for limitation of certain functions to authorized users. The operation of all keypads shall be limited to authorized users.

D.Keypads:

1. The system shall support a maximum of sixteen (16) keypads with alphanumeric display. Each keypad shall be capable of arming and disarming any system area based on a pass code or Proximity key authorization. The keypad alphanumeric display shall provide complete prompt messages during all stages of operation and system programming and display all relevant operating and test data.
2. Communication between the control panel and all keypads and zone expanders shall be multiplexed over a non-shielded multi-conductor cable, as recommended by the manufacturer. This cable shall also provide the power to all keypads, zone expanders, output expanders, and other power consuming detection devices.
3. If at any time a keypad does not detect polling, the alphanumeric display shall indicate "SYSTEM TROUBLE". If at any time two devices are programmed for the same address, the alphanumeric keypad shall display “4 WIRE BUS TROUBLE”. If at any time a keypad detects polling but not for its particular address, the alphanumeric display shall indicate "NON POLLED ADDR". The system shall display all system troubles at selected keypads with distinct alphanumeric messages.
4. The keypad shall include self-test diagnostics enabling the installer to test all keypad functions: display test, key test, zone test, LED test, relay test, tone test, and address test.
5. The keypad shall provide an easy-to-read English text display. The text shall exactly match the text seen in all software reports, keypad displays, and central station reports.
6. The keypad user interface shall be a simple-to-use, menu-driven help system that is completely user friendly.
7. The control panel shall support a keypad interface accessible on the World Wide Web in a browser window. The web-accessible keypad interface shall provide at least five (5) programmable hyperlinks for camera access or other use.
8. The system shall support sub-control keypads with four (4) built-in zones and capable of functioning in the following modes:
    a) Panel monitors all four (4) keypad zones independently with a maximum of 125 keypads attached to the control panel.
    b) Panel assigns one (1) zone to each keypad and monitors all keypad zones as a single zone with a maximum of 500 keypads attached to the control panel.
    c) Stand-alone mode allowing keypad to operate as a self-contained security system independent of the control panel.

E. Zone Configuration:

1. A minimum of 4 Class B ungrounded zones shall be available at each keypad or zone expander on the system. The system shall have the capacity for a maximum of sixteen (16) keypads and a maximum of 125 four (4) zone expanders or 500 single zone expanders. It shall also have the capacity of a maximum of 125 supervised relay output expanders. All Class B zones shall be 2-wire, 22 AWG minimum, supervised by an end-of-line (EOL) device and shall be able to detect open and short conditions in excess of 500ms duration.
2. Each zone shall function in any of the following configurations: Night, Day, Exit, Fire, Supervisory, Emergency, Panic, Auxiliary 1, Auxiliary 2, Fire Verification, Cross Zone, Priority, and Key Switch Arming.
3. The digital SLCs and the annunciator/keypad bus shall be able to operate at a maximum wiring distance of 2500 feet from the control panel on unshielded, non-twisted cable. This distance may be extended to a total of 15,000 feet when bus repeater modules are installed.
4. The system shall have the capability to incorporate up to 200 zone expander POPIT™ points.
5. Each zone shall function in any of the following configurations:

   a) Night
   b) Day
   c) Exit
   d) Fire
   e) Supervisory
   f) Emergency
   g) Panic
   h) Auxilary 1
   i) Auxilary 2
   j) Fire Verification
   k) Cross-Zone
   l) Priority
   m) Arming

F. Communication:

1. The system shall be capable of signaling to as many as 8 remote monitoring station receivers. Seven (7) of the eight (8) paths shall be capable of being assigned as either a “primary” or “backup” path. In such a manor the system shall have multiple primary paths to multiple remote monitoring stations as well as multiple backup paths to multiple monitoring stations.
2. The system shall be capable of signaling to two remote monitoring station receivers, four telephone numbers of 32 digits each using two separate switched telephone network lines such that if two unsuccessful attempts are made on the first line to the first number, the system shall make two attempts on first line to the second number. If these two attempts are unsuccessful, the system shall make two further attempts on

the first line of the first number. After the tenth unsuccessful attempt, dialing shall stop and the alphanumeric keypad shall display trouble. Should another event occur that requires a report to be transmitted, the dialing sequence shall be repeated. The system shall have a programmable option to dial a second set of telephone numbers after the first ten attempts using the same sequence.

3. The system shall be capable of communication using the IBM Synchronous Data Link Control format, and at least two other standard industry formats.
4. The system shall be capable of supporting Network communication with digital dialer backup, existing Ethernet data networks, satellite communication, fiber optic networks, local area networks, wide area networks, cellular communication, and retail data networks.

G. Network Communication:

1. The control panel shall be capable of asynchronous network communication with a retry time between 3 and 15 seconds for a total of one (1) minute. If communication is unsuccessful the control panel shall be capable of attempting backup communication through any of the available communication methods to the same receiver or a backup receiver.
2. The control panel shall employee adaptive communication technology. Adaptive Technology allows a Backup communication path programmed to use Network or Cellular to automatically ADAPT to the faster check-in rate of the Primary path should the Primary path become unavailable, creating a seamless transition for communication of messages. Select Adapt when programming the Checkin option. This allows a system to be fully supervised even if a path fails, while also keeping wireless charges low when the network is good.
3. Network communication between the control panel and the receiver shall be in a proprietary communication format.
4. The control panel shall be capable of supporting Dynamic Host Communication Protocol (DHCP) Internet Protocol (IP) addressing.
5. Underwriters Laboratories (UL) shall list network communication by the control panel for Grade AA High-Line Security.
6. The control panel shall be capable of two-way network communication using standard Ethernet 10BaseT in a LAN, WAN, or Internet configuration.
7. The control panel shall be capable of communication by means of a 128 Bit AES Rijndael Encryption process certified by NIST (National Institute of Standards and Technology) to an SCS-1R receiver with a built-in Encryption Alarm Router.
8. The control panel shall be capable of meeting DCID 6/9 and UL 2050 standards.

H. TCP/IP Network Trapping:

1. The control panel shall be capable of having communication set to Network operation. When a trap is set in Remote Link, the software shall be capable of sending a panel trap message with the panel account number to the SCS-101 installed in an SCS-1R receiver.

2. The receiver SCS-101 shall store the trap and monitor the panel for the next message. When the panel sends its next message, the receiver SCS-101 shall then send a message to the panel to contact Remote Link at the IP address contained in the original trap message.
3. The trap message shall be stored in the receiver SCS-101 for up to four hours. If the trap message is not sent to the panel within the four-hour window, the panel trap message shall be discarded and a new trap message must be sent from Remote Link.
4. The user shall be able to view the trap status in the receiver SCS-101 in Remote Link using the Trap Query function.

2.03 MANUFACTURER:

A. Digital Monitoring Products, Incorporated (DMP)
2500 N. Partnership Boulevard, Springfield, MO 65803
Phone (417) 831-9362. FAX (417) 831-1325. Website: www.dmp.com

B. The manufacturer shall have at least twenty-five (25) years of experience in the role of fire and security control manufacturing, and a proven track record of forward and backward compatibility for a minimum of twenty (20) years for its product's auxiliary devices, including system keypads, annunciation devices, zone expansion modules, and addressable detection devices.

C. The manufacturer must also manufacture receiving equipment that is compatible with standard dial-up telephone lines and network monitoring equipment that is compatible with a LAN, WAN, and the Internet. The receiving equipment shall be capable of receiving all status and alarm messages generated by the system. The receiving equipment shall be capable of updating the panel operating program and the system date and time.

2.04 CONTROL PANEL

A. DMP Command Processor™ Panel (XR500NL-G)

1. The system shall be inclusive of all necessary function, monitoring, and control capability as detailed herein and on accompanying shop drawings.

2.05 COMPONENT REQUIREMENTS

A. Component Enclosure:

1. Housings; power supply enclosures, terminal cabinets, control units, and other component housings, collectively referred to as enclosures shall be so formed and assembled as to be sturdy and rigid. If sheet steel is used in the fabrication of enclosures, it shall be not less than an 18 gauge door with a 20 gauge box frame. Where exposed pins, the hinges shall be of the tight pin type or the ends of hinge pins shall be tack welded to prevent ready removal. Doors having a latch edge length of less than 24 inches shall be provided with a single lock. Where the hinged door latch edge is 24 inches or more in length, doors shall be provided with three-point latching

device with lock; or alternatively with two locks, one located near each end. For SCIF and High Security applications an attack proof enclosure with proper tampers UL listed for use with the XR500/XR500N/XR500E shall be used.

B. Electronic Components

1. All system electronic components shall be solid-state type, mounted on printed circuit boards. Light duty relays and similar switching devices shall be solid-state type or electromechanical.
2. The panel shall have an over current notification LED that lights when devices connected to the Keypad Bus and LX-Bus(es) draw more current than the panel is rated for. When the over current LED lights, the LX-Bus (es) and Keypad bus are shut down.

C. Control Unit:

1. A battery test shall be automatically performed to test the integrity of the standby battery. The test shall disconnect the standby battery from the charging circuit and place a load on the battery. This test shall be performed no more than every 180 seconds.
2. The control unit shall be capable of operating and supervising notification appliance devices as well as addressable initiating detection devices and an integrated supervised dual line digital communicator.
3. Control unit must be “Flash ROM” updatable, and program must be held in non-volatile RAM. The panel shall be able to function while the update is in process.
4. Control unit shall be capable of operating using an optional built in Encrypted Alarm Router for SCIF (Sensitive Compartmented Information Facility) applications that is certified by NIST (National Institute of Standards and Technology) for 128 Bit AES Rijndael Encryption communications.
5. The optional built-in Encrypted Alarm Router shall be capable of compliance with DCID 6/9 and UL 2050 standards.

D. Remote Annunciators:

1. The system shall support a maximum of sixteen (16) supervised remote annunciators with the identical capabilities, functions and display layout. Operation of the remote annunciators shall be limited to authorized users by the use of a code or key.
2. The remote annunciators shall be capable of operating at a maximum wiring distance of 15,000 feet from the control unit on unshielded, non-twisted cable.

E. Control Designations:

1. Controls shall be provided to ensure ease of operation of all specified characteristics. Where applicable, clockwise rotation of controls shall result in an increasing function. Controls, switches, visual signals and indicating devices, input and output connectors, terminals and test points shall be clearly marked or labeled on the hardware to permit quick identification of intended use and location.

F. Test Modes:

1. The system shall include a provision that permits testing from any alphanumeric keypad. The test shall include standby battery, alarm bell or siren, and communication to the central station.
2. The system shall include a provision for an automatic, daily, weekly, thirty (30) day, or up to sixty (60) day communication link test from the control panel installation site to the central station.
3. The system shall include a provision for displaying the internal system power and wiring conditions. Internal monitors shall include the bell circuit, AC power, battery voltage level, charging voltage, panel box tamper, phone trouble line 1, phone trouble line 2, transmit trouble, and network trouble.

G. Serial Interface:

1. The control panel shall be capable of a serial interface to output information to a standard serial printer or serial interface to a communication port on a standard computer. Through control panel programming the system shall include a provision to allow the selection of which reports are to be output.

H. Power Supplies:

1. Power supplies for the control unit shall operate from 120 VAC, supplied at the respective protected areas. Standby batteries shall be supplied to power the system in the event of a utility power failure. Batteries shall be sized to provide 105% capacity for eight hours. Standby batteries shall be sealed lead-acid. Power supplies shall be all Solid State.
2. Controls shall be designed to maintain full battery charge when alternating current is available. Batteries shall be recharged to 85% capacity within 24 hours from battery use. The system shall be automatically transferred to battery power upon loss of alternating current power and return to alternating current power upon restoration. Intrusion alarms shall not be initiated during switch over; a signal shall be initiated upon failure of battery or alternating current power.
3. Approved power supplies shall meet or exceed the following power supply model specifications:

   a) UL Listed DMP 505-12: 12VDC 5 amp with transformer and enclosure.
   b) UL Listed DMP 504-24: 24 VDC 4 amps with transformer and enclosure.

I. Software:

1. The system shall interface with computer software with the capability to fully program the panel by connecting to the panel through:

   a) Direct cable connection interface card
   b) Receiver phone line connection
   c) Standard phone line connection
   d) Ethernet network connection

e) Network connection across the Internet

2. The system shall interface with computer software capable of locking down all controlled doors.
3. The system shall interface with computer software capable of monitoring and logging all events.
4. The system shall interface with computer software capable of exporting reports in the following file formats:

   a) Excel spreadsheet (*.xls)
   b) Rich Text (*.rtf)
   c) Text (*.txt)
   d) Windows Metafile (*.wmf)
   e) Comma-separated (*.csv)
   f) HTML document (*.htm)
   g) QuickReport (*.qrp)

5. The system shall interface with computer software capable of printing custom, filtered reports including:

   a) All Events
   b) Zone Action
   c) Arming/Disarming
   d) Area Late to Close
   e) User Code Changes
   f) Door Access Granted
   g) Door Access Denied
   h) Opening/Closing Schedule Changes
   i) System Monitors
   j) System Events

J. Control Panel Capability:

1. The basic control panel shall provide:

   a) Expansion to a total of at least 10,000 user codes with 99 user profile definitions.
   b) Sixteen (16) independent door/keypad addresses, each with four zones.
   c) Twenty (20) Holiday Dates for custom holiday scheduling by area.
   d) A total door access granted event buffer of at least 10,000 events.
   e) Anti-passback access control selectable by area and user.
   f) Four (4) shift schedules per area.
   g) A total of at least 100 programmable output relay schedules.
   h) Thirty-two (32) individual reporting areas.
   i) Built-in bell and telephone line supervision.

2. The networked control panel shall provide:

   a) All of the above features.

b) Require two-man access code or credentials.
c) Support programming to require the same or different access code entered within a programmed delay time of 1 to 15 minutes after disarming before activating a silent ambush alarm.
d) Support area programming that disables schedule and time-of-day changes while system is armed so that area can only be disarmed during scheduled times.

3. The encrypted control panel shall provide:

a) All of the basic and network features listed above.
b) Built-in Encrypted Alarm Router.
c) Certified operation that meets 128 Bit AES Rijndael Encryption communications.
d) Certified operation that meets SCIF (Sensitive Compartmented Information Facility) application needs.
e) Certified operation that meets NIST (National Institute of Standards and Technology) standards.
f) Certification that encrypted panel is capable of meeting DCID 6/9 standards.
g) Certification that encrypted panel is capable of meeting UL 2050 standards.

2.06 INTEGRATED INTRUSION ALARM AND ACCESS CONTROL OPERATION

A. Access Authority Levels:

1. The system shall be capable of programming access credentials authority levels to check whether the user has access to a specific area and also has the authority to disarm or arm the area. If the user access credential has access and disarm/arm authority the system shall provide the user the option to disarm the area simultaneously upon opening the door, or to open the door and begin an entry delay timer. With the timer option the user then disarms the area using an intrusion control keypad inside the area. If the user only has access authority to the area and the area is in an armed condition, the user is denied access to the area.

B. Door Open Schedule Override:

1. The system shall be capable of programming certain area doors to be scheduled to unlock and lock at specific times of the day or night. The lock/unlock function shall be capable of an override option depending upon the area armed/disarmed status. If the area remains in an armed status at the scheduled unlock time the armed status overrides the unlock schedule ensuring the doors remain locked and armed in situations where the business might open late, close early, is affected by inclement weather, or another emergency.

C. Common Area:

1. The system shall be capable of programming a common area to be armed when the last area in the system is armed and disarmed when the first area in the system is

disarmed. To ensure the common area works properly it shall not have any user codes assigned to the common area. The system shall also be capable of programming multiple common areas.

D. Early Morning Ambush (XR500N and XR500E only):

1. The system shall be capable of programming an area to require two user codes be entered within a programmed number of minutes to prevent an ambush message from being sent to the Central Station Receiver. If both user codes are not entered within the time an ambush message is sent to the central station receiver.
2. Both user codes shall have the authority to disarm the specific area and must be entered at the same keypad or reader. The keypad shall not display any indication that the ambush timer is running.
3. The system shall be capable of programming an output to provide an external indicator that an ambush situation is taking place.

E. Two-Man Rule (XR500N and XR500E only):

1. The system shall be capable of programming an area to require two separate user codes be entered in order to disarm and/or allow access to a specific area. Both required codes shall have at least the same or greater authority level. Both required codes shall be entered within 30 seconds or an alarm shall activate.

F. UL Bank Safe & Vault Operation (XR500N and XR500E only):

1. The system shall be capable of being programmed to only be disarmed during scheduled times regardless of the authority level of any user code or user profile in the system. The schedule and time and date set for this area shall not be capable of being changed while the area is armed. Zones assigned to Bank Safe & Vault areas shall not be able to be bypassed or force armed.

G. Panic Button Summary Test (XR500N and XR500E only):

1. The system shall have the ability to test panic buttons without sending a panic alarm to the Central Station Receiver.
2. The system shall also have the ability to send panic zone test verification and failure results to the Central Station Receiver.
3. During the test, each time a panic zone trips, the display number shall increment and the keypad buzzer sound for two seconds.
4. The number of panic zones tripped shall constantly display until the test ends or no panic zone activity has occurred for 20 minutes.
5. When the Panic Zone Test ends and a zone failed (did not trip) during the test, the keypad shall be able to display the zone name and number and have the buzzer sounds for one second. Additional zone failed zones shall display when a button is pressed.

2.07 FALSE ALARM REDUCTION FEATURES

A. The system shall be capable of providing false alarm reduction features, functions, capabilities, or processes that either require alarms be verified or potential alarms be corrected before a system or zone can be placed into an armed state.

B. Exit Error Alert and Reporting:

1. The panel shall be able to provide an automatic function to prevent a false alarm from occurring if an exit door does not properly close after the system is armed.

C. Entry and Exit Delay Annunciation:

1. When arming, the system shall provide clear annunciation indicators to the user about the need to exit the premises prior to the exit delay time expiring.
2. When disarming, the system shall notify the user the need to disarm the system prior to the entry delay time expiring.

D. Remote Annunciation:

1. The system shall be able to provide entry and exit delay time period notification. This notification can be from DMP keypads, remote annunciators, or bell tests.

E. Abort Reporting:

1. The system shall be capable of sending an Abort report to the central station if the system is disarmed while the alarm is still sounding. The Abort report shall be sent after the alarm report to notify the central station that an authorized user has cancelled the alarm.

F. System Testing:

1. The system shall offer testing features that are simple, quick, and complete and provide the highest measure of safety by ensuring that alarm conditions are detected and communicated to the proper authorities in a timely manner and on a regularly scheduled basis.

G. Ambush Code:

1. The system shall offer ambush codes for those dangerous encounters where the user is instructed to either arm or disarm the system under threat of harm. The duress code shall disarm the system without giving local indication of an alarm that might put the user well-being in jeopardy.

H. Two-Button Panic Feature:

1. The system shall support DMP keypads that provide the option to use only two-button panic codes. The user shall be required to press and hold two designated keys for approximately two seconds before the system generates a panic alarm.

J. Fire Verify Zones:

1. The system shall support Fire Verify zones to help the panel verify the existence of an actual fire condition before it sends an alarm report to the central station. The Fire Verify zone shall require the panel to perform a Sensor Reset whenever a device connected to a Fire Verify zone initiates an alarm. This shall begin a verification period during which the panel waits for a second alarm initiation. If the original zone or any other Fire Verify zone on the panel initiates an alarm within the next 120 seconds, the panel shall recognize this as an actual alarm and send an alarm report to the central station.

K. Cross-Zoning Protection:

1. The system shall support cross-zoning as a means of requiring two device trips to occur within a short period of time before sounding an alarm and sending an alarm report to the central station. Supported device trips shall be from one device that trips two times, or from two devices that each trip once.

L. Swinger Zone Bypassing:

1. The system shall be capable of automatically bypassing a zone if it goes into an alarm or trouble condition a specified number of times within a one-hour period. The panel shall be able to track the number of times the zone trips while armed and compare that against a programmed number. When that number is reached, the panel shall be able to automatically bypass the zone. The panel shall be capable of resetting the zone when the area to which it is assigned disarms, is manually reset from the keypad or remotely, or remains normal for one hour.

M. Recently Armed Report:

1. The system shall be capable sending a System Recently Armed report, along with a zone alarm report, to the central station any time an alarm occurs within five minutes of the system arming. The System Recently Armed report allows the central station operator to follow a "call the subscriber first" procedure instead of immediately dispatching the police to what could be a false alarm.

N. Transmit Delay:

1. The system shall be capable of programming the panel to wait up to 60 seconds before sending burglary alarm reports to the central station. If an alarm is accidental, the user shall be able to disarm the system within the programmed Transmit Delay time. An Abort report shall be sent in place of an alarm report after the system disarms. During the alarm, sirens and panel relay outputs shall not be delayed and shall still provide local condition annunciation.

O. Call Waiting Cancel:

1. The system shall be capable of being programmed to cancel call waiting any time the panel dials the receiver number to send a report.

P. Cancel/Verify:

1. The system shall be capable of sending either a Cancel Report or Verify Report to the Central Station to signify that the end user has Canceled an Alarm or Verified an Alarm condition.

2.08 BURGLARY CONTROL

A. Area System:

1. The system user shall be capable of selectively arming and disarming any one or more of 32 areas within the intrusion detection system based on the user PIN code and/or keypad used. Each of the 574 zones shall be able to be assigned to any of the 32 available areas. The system shall be capable of having up to a sixteen (16) character length name programmed for each area.
2. The system user shall be capable of assigning an opening and closing schedule to all areas or to each of the 32 areas separately. Each area shall be able to arm or disarm automatically by a schedule. The system shall have the capacity for common areas that automatically disarm when any other area disarms and that automatically arm when all others areas arm.
3. The networked system shall have the ability to comply with Bank Safe & Vault application. The networked system shall also have the ability to use a two-man rule for disarming or allowing door access to an area. The system shall have the ability to operate a Common Area application.

B. Zones:

1. The system shall have a minimum of eight (8) grounded burglary zones available from the control panel.

C. Burglary Equipment:

1. Burglary detection equipment shall communicate to the system by way of the control panel loop expansion bus or 900MHz receiver.

2.09 ACCESS CONTROL

A. Keypad:

1. The system shall display a message at any keypad when any system area remains disarmed past the scheduled closing time. The message shall be displayed at one minute past the scheduled closing time. A pre-warn tone shall also begin sounding. If the system is not armed or a schedule extended within ten minutes past the scheduled closing time, the system shall provide the option of sending a Late To Close report to the central station.
2. The keypad shall include a door strike relay capable of sending a report to the central station when activated.
3. The keypad shall be capable of proximity arming and disarming functions.

B. Area Access Control:

1. The system shall be capable of integrating area access control capability where specified into the same control panel with the ability to have up to 10,000 user credentials. User access is limited to custom profiles and/or schedules. Anti-passback shall be available. The networked version shall support a Two-Man Rule feature. The system shall support up to sixteen (16) access doors, connected to the system using a manufacturer-approved interface module.
2. Area door access products shall meet or exceed features offered by the following products:
3. Keypad reader/administration device – DMP Model 7063/7063A, 7073/7073A, 7163, 7173.
4. Wiegand Interface – DMP Model 733, 734.
5. Reader – DMP Model PP-6005B, Model PR-5455, Model MP-5365.
6. Cards or credentials – DMP Model 1326, DMP Model 1306P, DMP Model 1346, DMP Model 1386.

C. Access Control Equipment:

1. Access Control equipment shall communicate to the system by way of the control panel keypad bus.

2.10 COMPILED DETECTION EQUIPMENT LISTING

A. Hard-wired:

1. Hard-wired detection equipment shall communicate to the system by way of the control panel loop expansion bus. The equipment shall have a three (3) year warranty as stated in the current DMP Product Catalog and meet or exceed features offered in the following products:

a. Motion Detector – Optex Model RX-40PI (Wall Mount 40’x40’)
b. Motion Detector – Optex Model CX-702 (Wall Mount 70’x70’ or 150’x8’)
c. Motion Detector – Optex Model KX-08 (360 Ceiling Mount)
d. Motion Detector – Optex Model SX-360Z (360 Ceiling Mount Long Range up to 16’ Ceilings)
e. Glass Break Detector – Honeywell Model FG-1625
f. Door Contact – GE 1078C-N Recessed Contact
g. Door Contact – GE 1038T Surface Mount Contact
h. Zone Expansion Module – DMP Model 714-18T
i. Bus Splitter/Repeater Module – DMP Model 710
j. Output Expansion Module - DMP Model 716
k. Graphic Annunciator Module - DMP Model 717

B. Power Supplies and Transformers:

1. Power supply, transformer, and battery devices shall maintain system operation. The batteries shall be checked and replaced every three to five years. The equipment

shall have a three (3) year warranty as stated in the current DMP Product Catalog and meet or exceed features offered in the following products:

a. Power Supply – DMP Model 505-12, 115 VAC, 12 VDC
b. Power Supply – DMP Model 505-12LX, 115 VAC, 12 VDC
c. Transformer - DMP Model 327, 16.5 VAC 50 VA, Plug-in
d. Transformer - DMP Model 322, 16.5 VAC 56 VA, Wire-in
e. Transformer - DMP Model 323, 16.5 VAC 56 VA, Wire-in

C. Access Control Equipment:

1. Access control equipment shall provide access control functions between the panel and controller door access points. The equipment shall have a three (3) year warranty as stated in the current DMP Product Catalog and meet or exceed features offered in the following products:

a. Interface Module – DMP Model 734, Wiegand
b. Egress Module – DMP Model PB-2 REX Button
c. Reader – DMP Model PP-6005B Proxpoint Plus©
d. Reader – DMP Model MP-5365 Miniprox©
e. Reader – DMP Model MX-5375 Maxi-Prox™
f. Reader – DMP Model TL-5395 Thinkline II™
g. Door Controller – DMP Model 1306P Prox Patch™
h. Door Controller – DMP Model 1306PW Prox Patch™
i. Access Card – DMP Model 1351 ProxPass© Card
j. Access Card – DMP Model 1326 Proxcard II© Card
k. Access Device – DMP Model 1346 Proxkey II™ Keyfob, 1386 Isoprox II©.

2.11 OWNER TO PROVIDE

A. Programming of DMP system

B. One-Line drawing depicting; addressing, parts required, wire required

C. Detailed drawing for parts connections

D. Fresno Unified to purchase and provide the following parts:

1. DMP XR500NL-G
2. DMP 461 Expansion Card Module
3. DMP 481 Expansion Card
4. DMP 7060A Keypad
5. DMP 714-18T Addressing module
6. DMP 716 Relay module
7. DMP 860 Output module
8. DMP 305 Cube Relay

PART 3 - EXECUTION

3.01 INSTALLATION

A. Integration with Access & Security Management Software:

1. Provide all licensing, modules, programming, configuration, graphical backgrounds, etc. as required to integrate with the District's WAN access & security management software and support all utilized features.
2. Provide any available software updates to the access & security management software.

B. Each intrusion device (door/window magnetic switch, glass break sensor, motion sensor, etc.) shall be connected to a dedicated zone. Provide zone expansion modules as needed.

C. Labeling:

1. All wires to be wiretagged labeled at each end of cable
2. All devices to have programmed address on 3/8” (black on white) sticky back label on front of device.

END OF SECTION

FRESNO UNIFIED SCHOOL DISTRICT
REV DATE 02/22/17

SECTION 28 20 00 – ELECTRONIC SURVEILLANCE

PART 1 - GENERAL

1.01 DESCRIPTION:

A. This specification describes the design, installation, testing, and documentation of all necessary elements required to install an HDcctv HD-SDI Security Camera System.

B. The Security Camera System shall consist of HDcctv HD-SDI DVRs and Video Redistribution Servers, which will be monitored 24 hours a day at a remote Central Monitoring Station within FUSD.

C. All camera activity will be recorded via HDcctv HD-SDI Digital Video Recorder (DVR) on-site.

D. All camera control and viewing shall be accessible via the Districts existing data infrastructure.

E. All proposed HDcctv HD-SDI Equipment and Software shall be compatible and interoperable with FUSD existing HDcctv HD-SDI Equipment and Software currently used by FUSD Central Monitoring Station.

F. The proposed HDcctv HD-SDI Security Camera System shall have no recurring costs for software or hardware licensing or other fees.

G. All HDcctv HD-SDI DVRs shall be certified by the Manufacture of the CMS Central Monitoring Software and Site Video Distribution Software to be compatible and supported with current versions of the Manufacture's Software.

H. The FUSD Central Monitoring Station currently uses the Webgate Professional CMS Central Monitoring Software.

I. The Site Video Distribution Software currently uses the Webgate WinRDS Server Software.

J. Related work in Sections:

1. 02010-02910: DIVISION 2-SITE WORK.

2. 16010-16790: DIVISION 16-ELECTRICAL.

3. Other Division Sections as needed.

1.02 SCOPE OF WORK:

A. The Contractor shall configure the system as described and shown.

B. All HDcctv HD-SDI equipment shall conform to EIA 170 specifications.

C. To include all labor, material, and equipment for installation of Security Camera System cabling, cabling pathways, and pan/tilt/zoom power feeds.

D. Contractor shall provide all equipment, labor, supervision, tooling, miscellaneous mounting hardware, consumables, HDcctv HD-SDI Security Camera System cabling, cabling pathways, RS-485 Serial Data cable, and pan/tilt/zoom power feeds and any other necessary items even if not listed in these specifications.

E. Cabling, cabling pathways, and power feeds will be routed in such a way to provide HDcctv HD-SDI cameras and HDcctv HD-SDI camera equipment connectivity while minimizing the visual impact on the school's structure both interior and exterior.

F. FUSD will approve all locations where the HDcctv HD-SDI camera equipment is to be mounted and the corresponding termination point prior to work commencing.

G. This may include locations such as the main office, hallway common areas and targeted high-risk areas.

H. See Section 16790 Table 1, Section 16790 Table 2, and Site Diagrams for list of Schools, location and estimated quantity of HDcctv HD-SDI Cameras, and HDcctv HD-SDI DVRs required.

I. The exact position and placement of HDcctv HD-SDI Cameras, and HDcctv HD-SDI DVRs shall be determined by Site conditions, as designated by FUSD Representative.

J. N/A.

K. Final numbers will be determined by Site needs and other considerations as designated by FUSD Representative.

L. Shall include HDcctv HD-SDI Cameras and HD Spot Monitors for Main Office Areas.

M. Interconnection of all HDcctv HD-SDI Cameras and HDcctv HD-SDI DVRs shall be by Coaxial Cable or Fiber Optical Cable as described in these Specifications, and as Site Conditions determined by designated FUSD Representative require.

N. Salvage, inventory, and return existing Site Security Camera Systems to FUSD.

O. Existing Coaxial Cabling shall not be reused for the new Security Camera System.

1.03 SUBMITTALS:

A. General:

1. Submit the following per Conditions of the Contract and Division Specifications.

   a. Product Data:

      i. Manufacturer's literature and specifications for each component of the system.

   b. Site Survey:

      i. Site Survey shall have complete plot plans of area.
      ii. Internal areas shall be identified on separate sheets.
      iii. All camera, power supplies, Security Enclosures, HDcctv HD-SDI DVRs, Servers, and related equipment locations shall be clearly identified.
      iv. All camera view area zones shall be clearly identified.
      v. HDcctv HD-SDI DVR installation location shall be clearly identified.
      vi. All MDF/IDF cabinets used to connect system shall be clearly identified.
      vii. Any additional relevant information shall be included.

   c. All Site Surveys shall be bound and supplied as follows:

      i. Two (2) hard copies in size "B" (11" x 17") format.
      ii. Two (2) hard copies in size "D" (30" x 42") format.
      iii. One (1) electronic storage media (USB V3.0 stick) with one (1) version each in AutoCAD Lite, PDF, and WebGate Control Center Professional (4.x).
      iv. Larger drawings shall be rolled and secured in storage carriers.

   d. Shop Drawings:

      i. System diagram showing location of all devices.
      ii. Provide complete design calculations showing signal losses, signal gain settings, equipment settings, equipment locations, and related items.
      iii. Provide complete system diagram showing selection of all devices.
      iv. Provide all system diagrams in standard industry format.

2. Contractor shall submit for approval by FUSD the make, model, and performance specifications of all test equipment to be used in adjusting and certifying system parameters.

3. Contractor shall submit for FUSD approval the proposed test set-up and procedure for adjusting and checking system performance.

1.04 QUALITY ASSURANCE:

A. Contractor shall have successful experience in executing projects of this type and scope.

1. Submit with Bid, a list of projects to provide proof of required experience, including the following:

   a. Description of project.

   b. Name, address and phone number of Owner.

   c. Name and phone number of Owner's contact person having knowledge of the project.

   d. Approximate cost of the data cabling and associated electrical work for the project.

2. The Proposal shall include a list of all workmen the contractor proposes to use for the data-cabling portion of this project.

3. This list shall include:

   a. Name of worker.

   b. Worker's resume showing training and experience.

   c. List of contact persons and their telephone numbers.

4. Each worker proposed for work in the cabling portion of this work shall present a Certificate of Completion of Training in Fiber Optic and Security Camera Systems.

   a. Only workers with experience in Fiber Optic installation may perform work in that area.

   b. Only workers with experience in Security Camera Systems may perform work in that area.

5. The District Inspector or Project Manager may ask any or all workers to demonstrate their skill level before performing any work or continuing work.

6. If, in the opinion of the District, any worker is found to be deficient in this area, the Contractor must immediately provide necessary training to remove the deficiency or replace the worker with one having the required skills.

7. The Contractor shall use adequate numbers of skilled workmen who are thoroughly trained and experienced on the necessary crafts and completely familiar with the specified requirements and methods needed for the proper performance of the work.

8. The Contractor must provide a Project Manager who has demonstrated the ability to supervise an HDcctv HD-SDI Security Camera project.

9. The Project Manager must be available to be interviewed by FUSD and/or their representative, and must be deemed acceptable by FUSD and/or their representative.

10. Acceptance will not be unreasonably withheld.

11. The Project Manager must be available to attend meetings as required.

12. The work of this section shall conform to California Code of Regulations, Part 3, and all other applicable codes and standards.

13. Only a qualified Contractor holding licenses required by legally constituted authorities having jurisdiction over the work shall do work.

14. Contractor shall have completed similar projects of equal scope to systems described herein and shall have been engaged in business of supplying and installing specified type of systems for at least five years.

15. Use equipment manufacturers certified contractors.

16. Manufacturer shall warranty availability of spare parts common to proposed system for a period no less than that stipulated within the California Multiple Award Schedule (CMAS) terms and conditions.

17. If no time period is contractually stipulated, the Contractor shall provide a warranty of five years.

18. Contractor shall warranty that all work executed and materials furnished shall be free from defects of material and workmanship for a period of five years from acceptance date of Contract Completion, excluding specific items of work that require a warranty of a greater period as set forth in this Specification.

19. Immediately upon receipt of written notice from the District, the Contractor shall repair or replace, at no expense to the District, any defective material or work that may be discovered before final acceptance of work or within warranty period; any material or work damaged thereby; and adjacent material or work that may be displaced in repair or replacement.

20. Examination of or failure to examine work by the District shall not relieve Contractor from these obligations.

21. Contractor shall have a service organization capable of responding to warranty service requests within 24 hours of receipt of written notification and resolution within five working days.

22. If Contractor fails to repair or replace material or work indicated above within 15 days of receiving written notice, the District, with its own personnel or by Contract, may proceed with repair or replacement and assess cost against Contractor, if Contractor does not respond accordingly.

23. Persons skilled in trade represented by work, and in accordance with all applicable building codes, shall install system in accordance with best trade practice.

24. Contractor shall include in the Material List Submission copies of the manufacturer's certifications that the Contractor is an authorized distributor of the submitted manufacturers' products and has been adequately trained in the installation of those products.

25. This applies to all fiber optic components and fiber optic cable.

26. Contractor shall include in the Material List Submission a list of five projects of similar scope acceptable to the District and shall have a service organization capable of responding to warranty service requests within 24 hours of receipt of written notification and resolution within five working days.

27. Contractor shall include the telephone number of the customer's client contact for each project and a letter signed by a corporate officer, partner, or Owner of the contracting company describing the service capability of the company and stating the company's commitment to maintain that service capability through the warranty period.

B. All work and materials shall be in full accordance with the latest rules and regulations of the following codes, industry standards and references:

1. State of California:

   a. Title 24, Building Standards, State of California.

   b. Occupational Safety and Health Act (OSHA).

   c. Title 8, Electrical Safety, State of California.

   d. Title 19, California Code of Regulations.

2. Telecommunications Industry Association/Electronics Industry Association (TIA/EIA).

   a. ANSI/TIA/EIA-STD-RS455, Standard Test Procedures for Fiber Optic Fibers, Transducers, Connecting and Terminating Devices (latest issue).

   b. Telecommunications Industry Association/Electronic Industry Association (TIA/EIA) Standard 569, Commercial Building Standard for Telecommunications Pathways and Spaces (latest issue).

3. BICSI-Telecommunications Distribution Methods Manual, Volumes #1 and 2 (latest issue).

4. Underwriters Laboratories Inc. (UL): Applicable listings and ratings.

5. UL LAN Cable Certification Level 5.

6. National Electric Code (Articles 770, 800, latest issue).

7. National, State, and Local Occupational Safety and Health Administration (OSHA) building and fire codes.

8. ANSI/TIA/EIA Telecommunications Building Wiring Standards.

9. ANSI/TIA/EIA-568-A, Commercial Building Telecommunications Cabling Standard (latest issue).

10. ANSI/TIA/EIA-568-B-3, Optical Fiber Cabling Components Standard (latest issue).

12. ANSI/TIA/EIA-569-A, Commercial Building Standard for Telecommunications Pathways and Spaces (latest issue).

13. ANSI/TIA/EIA-569-A-1, Commercial Building Standard for Telecommunications Pathways and Spaces Addendum 1 - Surface Raceways (latest issue).

14. ANSI/EIA/TIA-598-A, Optical Fiber Cable Color Coding (latest issue).

15. ANSI/TIA/EIA-606, The Administration Standard for the Telecommunications Infrastructure of Commercial Building (latest issue).

16. ANSI/TIA/EIA-607, Commercial Building Grounding and Bonding Requirements for Telecommunications (latest issue).

17. ANSI/TIA/EIA-758, Customer-Owned Outside Plant Telecommunications Cabling Standard (latest issue).

18. ANSI/TIA/EIA-758-1, Addendum No. 1 to TIA/EIA-758, Customer-Owned Outside Plant Telecommunications Cabling Standard (latest issue).

19. TIA/EIA TSB-72, Centralized Optical Fiber Cabling Guidelines (latest issue).

20. BICSI Telecommunications Distribution Methods Manual (latest issue).

21. FCC Part 68.50.

22. National Electrical Manufacturer’s Association (NEMA).

23. National Fire Protection Association (NFPA), NFPA-70.

24. CCR Part 3 - California Electrical Code.

25. CCR Part 2 - Uniform Building Code.

26. HDcctv Alliance (HDcctv) HDcctv or current)

27. Society of Motion Picture and Television Engineers (SMPTE) SMPTE-292

C. Nothing in the drawings or specifications is to be construed to permit work not conforming to the codes or standards.

D. These codes or standards are to be considered minimum requirements.

E. Should the plans or specifications call for material, methods or construction of a higher standard, the plans or specifications shall govern.

1.05 EXISTING CONDITIONS:

A. Contractor shall be held to have visited the site prior to submitting proposal to determine existing conditions, nature of materials to be encountered and to evaluate other information affecting the work to be performed.

B. Protect and maintain all existing pipe lines, conduits, and structures.

C. Do not interfere with their safe operation.

D. Should damage occur notify the appropriate utility and the District at phone number 559-457-3000.

E. Damage costs are the responsibility of the contractor.

F. Existing Security Camera System shall remain functional until new Security Camera System is fully operational.

G. Existing Coaxial Cabling shall not be reused for the new Security Camera System.

PART 2 – PRODUCTS

2.01 EQUIPMENT

A. Camera RG 6/U 18/2 Coax Wire:

1. Wire shall be RG 6/U 18/2 Composite Coaxial Cable.

2. Cable shall comply with UL 1666 Vertical Shaft Flame Test.

3. Center conductor shall be # 18 AWG solid 1.016 mm Bare Copper Conductor.

4. Twisted Pair Cable Component shall be one (1) pair 18 AWG Bare Copper with Red and Black Polypropylene Insulation Jacket.

5. Dielectric shall be gas-injected FHDPE Foam High Density Polyethylene, with 95% Tinned Copper Braid coverage, PVC jacket.

6. Nominal Attenuation/ 100 feet:

a. 1.476dB at 5MHz.

b. 14.108dB at 400MHz.

c. 23.295dB at 1000MHz.

7. Velocity of Propagation shall be: 82% minimum.

8. Nominal Impedance shall be: 75 Ohms.

9. Nominal cable O.D. shall be: 12.319mm.

10. Cable shall be 100% sweep tested: 1MHz to 1GHz.

11. Minimum Bend Radius/Minor Axis: 69.850mm.

12. Belden, 539945 RG 6/U 18/2 Composite Coaxial Cable meets this requirement.

B. RS-485 Control Wire:

1. RS-485 Control Wire shall terminate to RS-485 16 Port Serial Data Distribution Buss located next to the HDcctv HD-SDI Multi-Video Digital Video Recorder for that camera.

2. Each RS-485 Control Wire shall have no breaks or splices from camera to distribution buss.

3. Each RS-485 Control Wire shall be labeled and numbered correlating to camera.

4. Each RS-485 Control Wire shall be installed on the RS-485 16 Port Serial Data Distribution Buss in sequential number correlating to port number on HDcctv HD-SDI Multi-Video Digital Video Recorder for that camera. (ie number one camera shall be installed on port one of the DVR and its control wire shall be installed on port one of the distribution buss.)

5. HD-SDI PTZ Cameras are not to share RS-485 Control Wires.

6. Standard Category 5e Twisted Pair Cabling meets with this requirement.

C. Fiber Optical Cable:

1. Shall use Multi-mode fiber cable for Ethernet connections.

2. Shall use Single-mode fiber for HD-SDI Video connections.

3. Shall be rated for indoor/outdoor use in both vertical and horizontal applications.

4. Shall meet the requirements of NEC for OFNR cables.

5. Shall comply with Bellcore, FDDI, EIA/TIA-568, and Insulated Cable Engineers Association (ICEA) standards.

6. Shall be constructed using a water blocking technology to inhibit water from affecting the fibers.

7. Shall be reinforced with Aramid yarn and also meet the following additional criteria:

a. Physical specifications:

Multi-mode: Single-mode:

62.5 micrometer core	8.3 micrometer core
125 micrometer cladding	125 micrometer cladding
250 micrometer coating	250 micrometer coating
900 micrometer buffering	900 micrometer buffering
0.275 numeric aperture	0.13 numeric aperture
Graded Index	

7. Fiber Count:

   a. Multi-mode: 6 Fibers
   b. Single-mode: 6 Fibers

8. Shall have Maximum Tensile Load during Installation: 1600 N

9. Shall have Maximum Tensile Load Operating: 525 N

10. Shall have Cable minimum bending radius:

    a. During installation: 20 times the cable diameter
    b. After installation: 10 times the cable diameter

11. Shall have Buffered Fiber minimum bend radius: 0.75 inches

12. Shall have operating temperature: -40 to +85 degrees C

13. Shall Have Wavelength/attenuation:

	Multi-mode:		Single-mode:	
	850 nm	1300 nm	1300 nm	1550 nm
Attenuation	3.0 db/km	1.0 db/km	.5 db/km	.5 db/km
Bandwidth	400 MHz/km		600 MHz/km Nominal	

Zero Dispersion Slope: 0.092 ps/(nm2-km)

14. The following Documents of the latest issue form a part of this specification to the extent specified herein:

    a. ANSI/TIA/EIA-STD-RS-455: Standard Test Procedures for Fiber Optic Fibers, Cables Transducers, Connecting and Terminating Devices.

    b. ANSI/TIA/EIA-STD-RS-359: Standard Colors for Color Identification and Coding.

    c. ANSI/TIA/EIA-STD-598A: Optical Fiber Cable Color Coding.

    d. MIL-STD-202: Test Methods for Electronic and Electrical Equipment.

    e. MIL-HDBK-454: Standard General Requirements for Electronic Equipment.

    f. MIL-STD-810: Environmental Test Methods and Engineering Guidelines.

g. UL Subject 1666: Standard Flame Test for Flame Propagation Height of Electrical and Optical Cable Installed Vertically in Shafts.

h. NFPA 70-1999: National Electric Code Article 770, Optical Fiber Cable.

15. All Fiber Ends shall be terminated in SC Style Connection Ends.

16. All Fiber Ends shall be securely mounted in a FUSD approved Fiber Light Guide Box.

17. All Fiber and Fiber Connections shall be clearly Labeled and Identified.

18. Optical Cable Corporation, DX006DSLA9KR (Single-mode), and DX006DWLS9KR (Multi-mode); meets this requirement.

D. HD-SDI Camera RG 6/U 18/2 Coax Wire BNC Connectors:

1. Shall be designed for RG6 coax cable.

2. Shall have BNC type connector.

3. Shall have permanent 360-degree water-tight seal on coax cable.

4. Shall provide superior pull-out strength of coaxial cable.

5. Shall provide reduced signal ingress and egress.

6. Shall have one-piece design.

7. Shall have advanced design to eliminate loose pins and sleeves.

8. Shall be designed to reduce installation time.

9. Shall have non-blind entry.

10. Shall use professional compression tool specially designed for connector.

11. Belden PPC Double Bubble Universal Compression BNC Connector, DB6U, and Cable Pro Double Bubble Compression Tool, CPLCRBC-BR; meets with this requirement.

E. HDcctv HD-SDI Static Cameras:

1. Shall have no recurring costs for software or hardware licensing or other fees.

2. Shall use 1/2.9 inch Sony CMOS Progressive Image Sensor.

3. Shall have a High Resolution of 1080p, and 720p.

4. Shall have 4-Axis Gimbal Structure for Free Lens Rotation

5. Shall have Smart IR Function 6 High Power IR LED and sensor.

6. Shall have Anti-IR Reflection Technology.
7. Shall have DC Iris, 2.8~12mm, IR Corrective Lens.
8. Shall have True Day & Night (ICR) Filter Function.
9. Shall have motorized Zoom/Focus Control.
10. Shall have Privacy Zone Masking.
11. Shall have Anti-Motion Blur Function.
12. Shall have CVBS Output.
13. Shall have HD-SDI SMPTE 292M Output.
14. Shall have dual video output (CVBS and HD-SDI) with simultaneous operation.
15. Shall have IP68 Weather and Vandal Proof rating.
16. Shall support Extended SDI Technology.
17. Shall be compatible with HD-SDI SMPTE 292M.
18. Shall use Progressive Scan Image Scanning System.
19. Shall have a De-Fog Function.
20. Shall have Total Pixels of: 2000(H) x 1241(V) = 2.482M pixels.
21. Shall have Effective Pixels of: 1944(H) x 1092(V) = 2.122M pixels.
22. Shall have Backlight Compensation using: WDR/BLC/HLC.
23. Shall have x16 Digital Zoom.
24. Shall support Dual Voltage (DC 12V, AC 24V).
25. HDcctv HD-SDI Static Cameras shall be powered by power supply detailed in this Section.
26. Shall meet HDcctv Alliance HDcctv specifications.
27. Clinton Electronics, CE-VX2HDL meets this requirement.
28. Heat resistant Polycarbonate inner case.
29. U.L. Listing

F. HDcctv HD-SDI Pan/Tilt/Zoom Cameras:

1. Shall have no recurring costs for software or hardware licensing or other fees.
2. Shall use 1/3, 2.0 Megapixel Panasonic CMOS progressive Image Sensor.
3. Shall have total Horizontal/Vertical Resolution of 2.48M Pixels.
4. Shall have active Horizontal/Vertical Resolution of 2.12M Pixels.
5. Shall have one CVBS Output of 1Vp-p, 75 ohms.
6. Shall have HD-SDI SMPTE 292M Output.
7. Shall have Focal Length of f=4.3 mm ~129.0 mm.
8. Shall have Aperture Ratio of F1.6 (wide) ~ F4.7 (tele).
9. Shall have 30X Optical, 32X Digital Zoom Function.
10. Shall have Pan/Tilt Speed (Manual): 250°/seconds.
11. Shall have Auto White Balance.
12. Shall have High Light Compensation.
13. Shall have Automatic Iris Control with manual override.
14. Shall have Automatic Gain Control.
15. Shall have Auto Day/Night Function.
16. Shall have Auto WDR Function.
17. Shall have Digital Image Stabilizer.
18. Shall have Twin IR illumination.
19. Shall have 250m IR illumination range.
20. Shall have twin motorized IR Zoom lens for IR intensity and distance adjustment.
21. Shall have HD-SDI SMPTE 292M compatibility.
22. Shall support HD-SDI 1080p30, 1080i60, and 720p60/30 Video Output.
23. Shall have Real Time Clock Battery Backup.
24. Shall have Progressive Scan Image Scanning System.
25. Shall have Pelco-D and Pelco-P protocols.

26. Shall have minimum Illumination of 0.5 lux (Color), 0.1 lux (IR Mode).

27. Shall have Automatic Focus Mode with manual override.

28. Shall have Built-in Wiper System.

29. Shall have Outdoor IP66 Weather-Proof rating.

30. Shall support 21-26VAC 6A.

31. Each HDcctv HD-SDI Pan/Tilt/Zoom Camera shall have an individual power supply used exclusively for that camera.

32. Each HDcctv HD-SDI Pan/Tilt/Zoom Camera shall be powered by dedicated power supply detailed in Section 16790, Part 2, L, 1-13.

33. Shall be Pendant Style, with Wall or Ceiling Mounting Bracket support.

34. OEM, WMK-M308, and appropriate Wall or Ceiling Mount meets this requirement.

G. HDcctv HD-SDI Multi-Video Digital Video Recorder:

1. Shall have HDcctv Alliance HDcctv specifications.

2. Shall have HD-SDI SMPTE 292M compatibility.

3. Shall support Analog and 960H (NTSC/PAL) Analog Input.

4. Shall support HD-SDI HD1080p, HD720p Digital Input.

5. Shall support high-resolutions over 1200TVL at Live/Playback for HD1080p.

6. Shall support dual codec (H.264, JPEG) & Multi Stream.

7. Shall have robust IPFR (Intelligent Power Failure Recovery) DVR File System.

8. Shall have no recurring costs for software or hardware licensing or other fees.

9. Shall be installed with required Security Lockbox as detailed in Section 16790, Part 2, H, 1-13.

10. Shall be installed in Multiple Locations on site.

11. Shall be installed no farther than 200m from furthest HDcctv HD-SDI Camera location.

12. Shall use Composite Coaxial Cable as Described in Section 16790, Part A 1–12 for all HDcctv HD-SDI Static, and HDcctv HD-SDI PTZ Camera Installations.

13. Shall support HDcctv HD-SDI Compatible Static Cameras with RS-485 Serial Data.

14. Shall support HDcctv HD-SDI Compatible PTZ Cameras with RS-485 Serial Data.
15. Shall have Sixteen (16) Multi-Video Camera Inputs
16. Shall have Five (5) Western Digital Purple 6TB Hard Drives (WD60PURX).
17. Shall have RAID Level 1/5/10.
18. Shall have Extended SDI capability.
19. Shall support up to 400m HD-SDI video transmission without repeater.
20. Shall support Fire Alert to DVR, and CMS with flame detection cameras.
21. Shall have Bi-directional Audio Function.
22. Shall have Simultaneous Record and Playback Function.
23. Shall support Ten (10) Monitoring and Two (2) Simultaneous Playback Sessions.
24. Shall have Four (4) Relay Outputs.
25. Shall have Sixteen (16) Dry-contact Inputs.
26. Shall have VGA Output with 1920 x 1080 Resolution.
27. Shall have HDMI Output with 1920 x 1080 Resolution.
28. Shall have BNC Output for CVBS Video.
29. Shall have Recording Speed of 400/480fps Recording and Playback at Full-HD 1080p Resolution.
30. Shall have Recording Pixel Resolution of 1920 x 1080p per channel.
31. Shall have Recording Rate of 30fps per channel.
32. Shall have a Live Play Back Pixel Resolution of 1920 x 1080p per channel.
33. Shall have a Live Play Back Rate of 30fps per channel.
34. Shall have At-the–PC Playback of removed DVR HDD.
35. Shall be installed on Contractor Developed Gigabit Ethernet Network, independent and isolated from site LAN.
36. WebGate, HS1620F-D Penta-brid DVR with Five (5) Western Digital, WD60PURX Purple 6TB Hard Drives meets this requirement.

H. Security Enclosure:

1. All HDcctv HD-SDI DVRs, Video Distribution Servers, RS-485 Serial Data Distribution Buss, Fiber Converters, Ethernet Converters, Audio Amplifiers, Encoders/Decoders, Fiber Optical Cables, Twisted Pair, Coaxial Cables, and other related material shall be installed in wall mounted Security Lockboxes.

2. Shall be constructed of fully welded 16-gauge steel.

3. Shall have dimensions of 23.87” W x 11.34” H x 28.24”.

4. Shall be installed with FUSD Approved Locks.

5. FUSD shall inform contractor, before project begins, type of locks to be used.

6. Shall have internal Rack Rail to support standard 19” mounted equipment.

7. Internal Rack Rail shall have 1/2”, 3/4” 1” and $1^{1/2”}$ Electrical Knockouts and 2” x 4” Knockouts for Cable Pass-through on Back, Bottom, and Sides.

8. Shall come with two (2) $4^{1/2”}$ Fans, and Fan Cover Plate for effective thermal management.

9. Shall have Grommet Material installed on all Cable Pass-thru Openings to protect cable from damage.

10. Shall be installed with Internal Double Duplex 110voltAC 15amp Power Outlets.

11. Shall be installed in accordance to FUSD Master Specifications for Electrical Installations Sections 16010 - 16610.

12. All cabling connections between Cameras/Fiber Converters/Power Supplies/DVRs shall be made in EMT conduit.

13. No exposed cabling is allowed.

14. Middle Atlantic, DLBX Lockbox with DLBX-RR5 Rail Rack meets this requirement.

I. RS-485 16 Port Serial Data Distribution Buss (PTZ only):

1. Shall be installed with every HDcctv HD-SDI DVR.

2. Shall have Two (2) RS-485 Serial Data Input Ports.

3. Shall have Sixteen (16) RS-485 Serial Data Output Ports.

4. Shall have One (1) RS-232 Serial Data Input Port.

5. Shall be powered with External Power Supply.

6. Each HDcctv HD-SDI PTZ Camera shall be connected to RS-485 Serial Data Distribution Buss with Standard CAT 5e Twisted-Pair Cable.

7. All HD-SDI PTZ Cameras that run to the HDcctv HD-SDI DVR shall have the RS-485 Serial Data Inputs connected through this RS-485 Serial Data Distribution Buss.

8. Vitec, VT-DD16 with Standard CAT 5e Twisted-Pair Cabling meets this requirement.

J. HD Spot Monitor:

1. Shall be flat panel 40” 16 x 9 wide screen LED.

2. Shall be installed with wall mounted Monitor mount.

3. Signal shall be feed from appropriate DVR with a continuous run HDMI Cable.

4. Power and Signal feed shall be terminated in appropriate wall boxes.

5. Power and Signal feed shall have corresponding outlets for 110v and HDMI connection.

6. Shall be installed in accordance to FUSD Master Specifications for Electrical Installations Sections 16010 – 16610.

7. Signal feed shall connect to Spot Monitor with a short small diameter HDMI Cable.

8. Final placement of spot monitor will be determined by site needs, site conditions, and approval of FUSD representative.

9. Samsung, UN40EH5000F Wide Screen LED monitor, with Unix CCTV: XA CVT-HDMI SD/HD/3G-SDI to HDMI Converter and appropriate Wall Monitor Mount meets this requirement.

K. Wall Monitor Mount:

1. Shall have a minimum weight load limit of 60 lbs.

2. Shall support VESA 200 X 200; 200 X 100; 100 X 100; and 75 X 75.

3. Shall have integrated Wire Management System.

4. Shall have 3D axis that allows 360-degree motion.

5. Shall support monitors from 15” to 40” in screen size.

6. Sanus, MF215-B1 meets this requirement.

L. Camera Power Supply:

1. Power Supply shall support sixteen (16) 24VAC terminals outputs.

2. Shall deliver a Minimum of 7VA output.

3. Shall be Wall Mounted with Lockable Access Door.

4. Shall be installed with FUSD Approved Locks.

5. FUSD shall inform contractor, before project begins, type of locks to be used.

6. Shall be installed with internal duplex 110VAC 20-amp power outlet. Shall be U.L. Listed

7. Shall be installed in accordance to FUSD Master Specifications for Electrical Installations.

8. All cabling connections between Cameras/Fiber Converters/Power Supplies/DVRs shall be made in EMT conduit.

9. No exposed cabling is allowed.

10. Clinton Electronics, CEAC24V16 meets this requirement.

M. Site Audio Encoder:

1. Shall be installed at all sites that have Swimming Pools.

2. Connection between Encoder and Decoder shall be Fiber Optic Cable, as detailed in Section 16790, Part C 1-15.

3. Shall use standard Fiber Optic Cable to Twisted Pair 1Gig Ethernet Converters.

4. Shall be installed in Security Enclosure as detailed in Section 16790, Part 2, H, 1-13.

5. Shall be connected to Audio Output of the DVR that controls the HDcctv Security Cameras for the Swimming Pool Areas.

6. Shall have the following Audio Input Specifications:
   - RCA connectors, unbalanced, 2k Ohm impedance.
   - Clipping level 5.3 dBu, 4 Vpp.
   - Frequency response (-3dB) 20 -- 20'000 Hz.
   - Signal to Noise Ratio 89dB, THD <0.03%.
   - Stereo crosstalk -89dB.
   - Input signal attenuable by software setting (-3 -- +19.5dB).

7. Shall have RS-232 Serial Interface.

8. Shall have the following Audio Formats Specifications:
   - MP3, encoding/decoding up to 192/320kbps.
   - VBR and CBR support.
   - PCM 16bit @8, 16, 22.05, 24, 32, 44.1, 48 kHz.
   - G.711, uLaw, aLaw (sample rates same as PCM).

9. Shall have aluminum case construction.

10. Barix Instreamer, 2012.9123 with Fiber Optic to Twisted Pair 1Gig Ethernet converter meets this requirement.

N. Site Audio Decoder:

1. Shall be installed at all sites that have Swimming Pools.

2. Connection between Encoder and Decoder shall be Multi-Mode Fiber Optic Cable, as detailed in Section 16790, Part 2, C, 1-15.

3. Shall use Multi-Mode Fiber Optic Cable to Twisted Pair 1Gig Ethernet Converters.

4. Shall be installed in Security Enclosure as detailed in Section 16790, Part 2, H, 1-13.

5. Shall be connected to Site Audio Speaker.

6. Shall have the following Analog Output Specifications:
   - 2 x 25 W (RMS @ 8 Ohm) speaker outputs.
   - 3.5 mm (1/8 inch) headphone jack.
   - S/P DIF out (optical).
   - Output level software controllable.
   - Frequency response (-3 dB) 19 Hz -- 20 kHz.
   - Dynamic range 94 dB.
   - SNR/THD -94 dB, <0.05%).

7. Shall have RS-232 Serial Interface.

8. Shall have the following Audio Formats Specifications:
   - MP3, encoding/decoding up to 192/320kbps.
   - VBR and CBR support.
   - PCM 16bit @8, 16, 22.05, 24, 32, 44.1, 48 kHz.
   - G.711, uLaw, aLaw (sample rates same as PCM).

9. Shall have built-in IR receiver, with IR remote control included.

10. Shall have aluminum case construction.

11. Barix Exstreamer 200, 2005.9055 with Fiber Optic to Twisted Pair 1Gig Ethernet converter meets this requirement.

O. Site Audio Speaker:

1. Shall be installed at all sites that have Swimming Pools.

2. Shall be connected to Site Audio Decoder.

3. Shall use #304 Stainless Steel for Exterior Enclosure.

4. Shall have Output Rating of 30 Watts Nominal/ 50 Watts Peak.

5. Shall have Impedance of 8 Ohms.

6. Shall have Frequency Response of: 500 to 7000 Hz.

7. Shall have High Fidelity Voice Coil.

8. Shall have Heavy Duty 1.8lb Magnet.

9. Shall be rated for Exterior Installation.

10. Elk Products Inc., ELK-1RT meets this requirement.

P. Video Redistribution Servers:

1. Contractor shall supply for each site One (1) Video Redistribution Server, located in the Central MDF Room.

2. Shall be installed Turn-Key Functional on Mini-ITX Form Factor, XeonE3 Processor Based, Industrial Server.

3. Shall have no recurring costs for software or hardware licensing or other fees.

4. Shall have Windows 10 Professional Installed.

5. Shall have Dual Gigabyte Ethernet Ports on Server Board.

6. Shall have 16 Gigabyte Ram memory.

7. Shall have 1TB Solid State Hard Drive (SSD) storage.

8. Shall have Low Profile, Wall Mountable, and Motherboard Case.

9. Shall be installed in Security Enclosure as detailed in Section 16790, Part 2, H, 1-13.

10. Shall have two (2) Gigabit Ethernet LAN Ports.

11. Gigabit Ethernet LAN Ports shall be Physically Separated and Independent of each other.

12. Shall connect to Site HDcctv DVRs through one Independent Gigabit Ethernet LAN Port.

13. Shall connect to Site LAN through second Independent Gigabit Ethernet LAN Port.

14. Shall have 80 1080p/15fps Input Stream Channels.

15. Shall have 80 1080p/15fps Output Stream Channels.

16. Shall have 100 Users Support.

17. Shall have Local Network DVR Auto-Detection Support.

18. Shall have Batch Registration of Auto-Detected DVRs Support.

19. Shall have Batch Registration of Multi Users Support.

20. Shall have Power Adapter with Input 100/240 Volts AC 50-60 Hz, and Output 12V DC 10 Amp (12V, 10A DC).

21. Asus P9D-I Mini-ITX Server board; with Intel XeonE3 Processor, E3v3 E3-1275V3; 16Gig Ram; Samsung 1TB SSD, 840Evo; Windows 10 Professional; Black Habey Low Profile Mountable Mini-ITX Case, EMC-800BL; Diamond AMD Radeon HD 7750 PCIE 1G GDDR5 Video Graphics Card, 60mm x 10mm PWM Fan, 12V DC 10 Amp Power Supply, and WebGate Redistribution Server Software, WinRDS; meets with this requirement.

Q. NTP Servers:

1. Contractor shall supply for each site One (1) NTP Server, located in the Central MDF Room.

2. Shall be installed Turn-Key Functional on Mini-ITX Form Factor, Intel Celeron Processor Based, Industrial Server.

3. Shall have no recurring costs for software or hardware licensing or other fees.

4. Shall have Windows 10 Professional Installed.

5. Shall have Dual Gigabyte Ethernet Ports on Server Board.

6. Gigabit Ethernet LAN Ports shall be Physically Separated and Independent of each other.

7. Shall have 16 Gigabyte Ram 1333MHz / 1600MHz DDR3L SO-DIMM memory.

8. Shall support mSATA SSD and 2.5" HDD SATA 3.0 (6Gb/s).

9. Shall have 1TB Solid State Hard Drive (SSD) storage.

10. Shall have Low Profile, Wall Mountable, and Motherboard Case.

11. All servers shall be powered with 550W battery back-up (UPS). UPS to be mounted inside security enclosure. Minimum 550W meets this requirement.

12. Shall be installed in Security Enclosure as detailed in Section 16790, Part G 1-13.

13. Shall have two (2) Gigabit Ethernet LAN Ports.

14. Shall connect to Site LAN through second Independent Gigabit Ethernet LAN Port.

15. Shall have Intel Celeron Processor J1900 Quad-Core 2M Cache, 2.41 GHz.

16. Shall have one USB 3.0 port.

17. Shall have one HDMI port.

18. Shall have one RS-232 Serial port.

19. Shall have VESA Mount Bracket (75mm x75mm).

20. Shall have Power Adapter with Input 100/240 Volts AC 50-60 Hz, and Output 12V DC 10 Amp (12V, 10A DC).

21. QoTom Q190, Bay Trail Mini PC, Q190-S02; 16Gig Ram; Samsung 1TB SSD, 840Evo; Windows 10 Professional; and 12V DC 10 Amp Power Supply; meets with this requirement.

PART 3 - EXECUTION

3.01 INSTALLATION

Upon receipt of all materials on this job site, but prior to beginning any installation. Contractors shall schedule a pre-installation meeting with FUSD Camera shop to review all materials proposed for use and mounting locations of all components.

A. Installation of RG 6/U 18/2 Coaxial Cable:

1. Wire shall be RG 6/U coaxial cable with two 18-gauge conductors to provide effective transmission over assigned runs.

2. The two 18-gauge cables shall be used for power.

3. All cable & wire runs shall be continuous between components or wire. No splicing of any cable installed under this section is allowed.

4. Shall be connected to HDcctv HD-SDI DVR thru BNC Connection Panel with RG 6 BNC Jumper Wires.

5. See HDcctv HD-SDI Camera and Cable Manufactures minimum specifications for cable distance.

6. At no time shall coaxial cable runs exceed 600 feet.

7. Except as otherwise indicated by FUSD Representative, install wiring in raceway.

8. Conceal raceway, except in unfinished spaces and as indicated by FUSD Representative.

9. All cabling connections between HDcctv HD-SDI Cameras and HDcctv HD-SDI DVRs shall be made in appropriate conduit runs.

10. No exposed cabling is allowed.

11. Install cable without damaging conductors or jacket.

12. Do not bend cable to a smaller radius than minimum recommended by manufacturer.

13. Do not exceed manufacturers recommended pulling tensions.

14. Pull cables simultaneously where more than one is being installed in the same raceway or at the same location.

15. Compound/Lubricant shall be used.

16. Compound/Lubricant used must not damage conductor insulation.

17. Use pulling methods that will not damage cable or raceway, including fish tape, cable, rope, break-a ways, and wire-cable grips.

18. All wire installed on the exterior of FUSD School Sites shall be in galvanized conduit or liquid-tight conduit a minimum of 2” in size.

19. Individual and group cable runs in accessible ceiling spaces shall be open cable runs supported by “J” hooks attached to the building structure.

20. Refer to Fresno Unified Master Specifications, section 16700 3.06-3.18 and Details E2-1 - E2.80 for more information on proper installation requirements.

21. RG 6/U BNC Connector Ends shall be terminated with manufacturer’s approved methods and tools.

22. RG 6/U BNC Connector Ends shall be terminated with uniformed pressure to insure a secure vapor barrier around the diameter of the outer cable.

23. RG 6/U BNC Connector Ends shall be terminated to withstand stress when pulled by hand.

B. RS-485 Control Wire:

1. Each HD-SDI PTZ Camera shall have individual RS-485 Control Wire run with the RG 6/U 18/2 Coax Cable.

2. All cable runs shall be from the cameras to the nearest HDcctv HD-SDI DVR as identified by FUSD.

3. Each RS-485 Control Wire shall have no breaks or splices from camera to distribution buss.

4. Each RS-485 Control Wire shall be labeled and numbered correlating to camera.

5. Each RS-485 Control Wire shall be installed on the RS-485 16 Port Serial Data Distribution Buss in sequential number correlating to port number on HDcctv HD-SDI Multi-Video Digital Video Recorder for that camera. (ie number one camera shall be installed on port one of the DVR and its control wire shall be installed on port one of the distribution buss.)

6. Each HD-SDI PTZ Camera shall have a dedicated RS-485 Control Wire.

7. Cameras are not to share RS-485 Control Wires.

8. At no time shall coaxial cable runs exceed 600 feet.

9. All cabling connections shall be made in appropriate conduit runs.

10. No exposed cabling is allowed.

11. Install cable without damaging conductors or jacket.

12. Do not bend cable to a smaller radius than minimum recommended by manufacturer.

13. Do not exceed manufacturers recommended pulling tensions.

14. Pull cables simultaneously where more than one is being installed in the same raceway or at the same location.

15. Compound/Lubricant shall be used on all cable pulls.

16. Compound/Lubricant used must not damage conductor insulation.

17. Use pulling methods that will not damage cable or raceway, including fish tape, cable, rope, break-a ways, and wire-cable grips.

18. All wire installed on the exterior of FUSD School Sites shall be in galvanized conduit or liquid-tight conduit a minimum of 2” in size.

19. Individual and group cable runs in accessible ceiling spaces shall be open cable runs supported by “J” hooks attached to the building structure.

20. Refer to section 16700 3.06-3.18 and Details E2-1 - E2.80 for more information on proper installation requirements.

C. Installation of Fiber Optical Cable:

1. Fiber Optical Multi-Mode Cable for Ethernet Data shall be used to connect HDcctv HD-SDI DVRs to Video Distribution Server when distance exceeds Twisted-Pair Specifications.

2. Fiber Optical Multi-Mode Cable for Ethernet Data Connections shall be used with FUSD approved 1Gig Ethernet Twisted Pair to Multi-Mode Fiber Optic Transceivers.

3. Fiber Optical Single-Mode Cable for HDcctv HD-SDI Video shall be used to connect HDcctv HD-SDI DVRs to HDcctv HD-SDI Cameras when distance exceeds 200 Meters.

4. Fiber Optical Single-Mode Cable for HDcctv HD-SDI Video shall be used with FUSD approved HDcctv HD-SDI Single-Mode Fiber Optic Transceivers

5. Fiber Optical Cable shall be terminated in FUSD approved Light Guide Boxes.

6. Fiber Optical Cable shall be installed in Security Enclosure.

7. All cable runs shall be from the Site HDcctv HD-SDI DVRs to Site Video Redistribution Server.

8. Except as otherwise indicated by FUSD Representative, install wiring in raceway.

9. Conceal raceway, except in unfinished spaces and as indicated by FUSD Representative.

10. All cabling connections between HDcctv HD-SDI DVRs and Video Redistribution Server shall be made in conduit runs.

11. No exposed cabling is allowed.

12. Install Fiber Optical Cable without damaging conductors or jacket.

13. Do not bend Fiber Optical Cable to a smaller radius than minimum recommended by manufacturer.

14. Do not exceed manufacturers recommended pulling tensions.

15. Pull Fiber Optical Cable simultaneously where more than one is being installed in the same raceway or at the same location.

16. Pulling Compound/Lubricant shall be used.

17. Compound/Lubricant used must not damage conductor insulation.

18. Use pulling methods that will not damage Fiber Optical Cable or raceway, including fish tape, cable, rope, break-a ways, and wire-cable grips.

19. All Fiber Optical Cable installed on the exterior of FUSD School Sites shall be in galvanized conduit or liquid-tight conduit a minimum of 2” in size.

20. Individual and group cable runs in accessible ceiling spaces shall be open cable runs supported by “J” hooks attached to the building structure.

21. Refer to section 16700 3.06-3.18 and Details E2-1 - E2.80 for more information on proper installation requirements.

D. Mounting of HDcctv HD-SDI Static Cameras:

1. All mounting hardware and installation practices shall be approved by FUSD personnel before proceeding with installation.

2. Camera mounting locations shall be between 12’ to 14’ above finished floor. Contractor shall insure that camera locations are not blocked or have the cameras view impaired by any other building components.

3. Mounting of HDcctv HD-SDI Camera Equipment shall be on permanent surfaces only.

4. HDcctv HD-SDI Camera Equipment is NOT to be mounted on removable or non-permanent surfaces such as removable ceiling tiles.

5. Shall be connected to HDcctv HD-SDI DVR thru BNC Distribution Panel using RG 6 Coax Cabling and RG 6 Coax Jumper Cabling.

6. All cabling connections between HDcctv HD-SDI Cameras, Power Supplies, RS-485 Serial Data Distribution Buss, and HDcctv HD-SDI DVRs shall be made in appropriate conduit runs.

7. No exposed cabling is allowed.

8. All HDcctv HD-SDI camera cabling and conduit systems shall be routed so that it is tamper proof.

9. **HDcctv HD-SDI Camera locations are to be approved by FUSD Representative before work is to begin.**

E. Mounting of HDcctv HD-SDI Pan/Tilt/Zoom Cameras:

1. All mounting hardware and installation practices shall be approved by FUSD personnel before proceeding with installation.

2. Mounting locations shall be placed as high as the maximum viewing area allows.

3. Mounting of HDcctv HD-SDI Camera Equipment shall be on permanent surfaces only.

4. HDcctv HD-SDI Camera Equipment is NOT to be mounted on removable or non-permanent surfaces such as removable ceiling tiles.

5. Shall be connected to HDcctv HD-SDI DVR thru BNC Distribution Panel using RG 6 Coax Cabling and RG 6 Coax Jumper Cabling.

6. Shall be connected to RS-485 Serial Data Distribution Buss with Standard CAT 5e Twisted-Pair Cabling.

7. All cabling connections between HDcctv HD-SDI Cameras, Power Supplies, RS-485 Serial Data Distribution Buss, and HDcctv HD-SDI DVRs shall be made in appropriate conduit runs.

8. Shall be installed no further than 200m total distance between HDcctv HD-SDI PTZ Camera and HDcctv HD-SDI DVR.

9. No exposed cabling is allowed.

10. All HDcctv HD-SDI camera cabling and conduit systems shall be routed so that it is tamper proof.

11. **HDcctv HD-SDI Camera locations are to be approved by FUSD Representative before work is to begin.**

F. Installation of HDcctv HD-SDI DVRs:

1. HDcctv HD-SDI DVRs shall be secured in an individual wall mounted Security Enclosures.

2. Shall be installed in multiple locations on each Site.

3. Shall be installed in locations that do not exceed 200m total distance between HDcctv HD-SDI DVR and furthest Camera.

4. Shall be connected to RS-485 Serial Data Distribution Buss with Standard CAT 5e Twisted-Pair Cabling.

5. All cabling connections between HDcctv HD-SDI Cameras and HDcctv HD-SDI DVRs shall be made in appropriate conduit runs.

6. Dedicated 110 volt 20-amp circuit and Power Outlets shall be mounted inside each Security Lockbox and Power Supply.

7. Shall be installed in accordance to FUSD Master Specifications for Electrical Installations Sections 16010 – 16610.

8. No exposed cabling is allowed.

G. Installation of Security Enclosures:

1. All HDcctv HD-SDI DVRs, Video Distribution Servers, RS-485 Serial Data Distribution Buss, Fiber Converters, Ethernet Converters, Audio Amplifiers, Encoders/Decoders, Fiber Optical Cables, Twisted Pair, Coaxial Cables, and other related material shall be installed in wall mounted Security Lockboxes.

2. Shall be installed with FUSD Approved Locks.

3. FUSD shall inform contractor, before project begins, type of locks to be used.

4. Shall be installed with minimum 2” conduit for all camera cables.

5. Number of 2” and larger conduits shall be determined by site conditions.

6. Shall be installed with internal Rack Rail to support standard 19” mounted equipment.

7. Internal Rack Rail shall have 1/2”, 3/4” 1” and $1^{1/2”}$ Electrical Knockouts and 2” x 4” Knockouts for Cable Pass-through on Back, Bottom, and Sides.

8. Shall be installed with two (2) $4^{1/2”}$ Fans, and Fan Cover Plate for effective thermal management.

9. Shall be installed with Grommet Material installed on all Cable Pass-Thru Openings to protect cable from damage.

10. Shall be installed with Dedicated Double Duplex 110voltAC 20-amp Power Outlets within each enclosure.

11. All cabling connections between Cameras/Fiber Converters/Power Supplies/DVRs shall be made in EMT conduit.

12. Shall be installed in accordance to FUSD Master Specifications for Electrical Installations Sections 16010 – 16610 & per FUSD standard drawing “DLBX Lockbox” revised on 11/26/14.

13. Shall be installed with BNC Patch Panel for each Video Feed, for service and testing of video signal.

14. Shall be installed with two (2) Ethernet jacks connected Site LAN.

15. When Two (2) Enclosures are installed in same area, they shall be mounted side by side as diagrammed in Detail 16790-02.

16. See Detail 16790-02 for Layout and Mounting Diagrams.

17. No exposed cabling is allowed.

H. Installation of HD Spot Monitors:

1. Shall be used to monitor single or multiple HDcctv HD-SDI Spot Cameras.

2. Shall be installed as Site conditions require and with approval from FUSD Representative.

3. Shall be installed with HDcctv HD-SDI to HDMI Converter (See Section16790, Part 2, J, 1-9.

4. Shall be installed with wall mounted Monitor mount.

5. Signal shall be feed from appropriate HDcctv HD-SDI Camera HDMI Converter with an appropriate length HDMI Cable.

6. Shall be installed with Duplex 110voltAC 20-amp Power Outlet.

7. Power and Signal feed shall be terminated in appropriate wall boxes.

8. Power and Signal feed shall have corresponding outlets for 110v and HDMI connection.

9. Signal feed shall connect to Spot Monitor with a short, small diameter HDMI Cable.

10. Shall be installed in accordance to FUSD Master Specifications for Electrical Installations Sections 16010 – 16610.

11. Final placement of spot monitor will be determined by site needs, site conditions, and approval of FUSD representative.

12. No exposed cabling is allowed.

I. Mounting of HDcctv HD-SDI Camera Power Supplies:

1. All mounting hardware and installation practices shall be approved by FUSD personnel before proceeding with installation.

2. All cabling connections between HDcctv HD-SDI Cameras/Fiber Converters/Power Supplies/HDcctv HD-SDI DVRs shall be in conduit. Per FUSD Electrical specified run

3. No exposed cabling is allowed.

4. All HDcctv HD-SDI camera cabling and conduit systems shall be routed so that it is tamper proof.

J. Installation of Audio System:

1. Shall be used at sites where one-way communication from the Central Station to site is required.

2. Shall be installed in Security Enclosure.

3. Shall be feed from the site HDcctv HD-SDI DVR audio output.

4. Dedicated and Isolated Fiber Optical Cable with Ethernet Converters shall be used to interconnect Audio Encoder to Audio Decoder.

5. High Temp Power Supplies shall be used with all Audio Equipment.

6. Dedicated 110 volt 20-amp Power Outlets shall be mounted inside each Security Lockbox and Power Supply.

7. Outdoor Speaker shall be installed as close to area intended for coverage as is physically possible.

8. Final placement of Outdoor Speaker will be determined by site needs, site conditions, and approval of FUSD Representative.

9. No exposed cabling is allowed.

K. Installation of Video Redistribution Servers:

1. Each Site shall have one Video Redistribution Server installed in a central location.

2. Video Redistribution Servers shall be installed in a Security Enclosure.

3. Shall be installed with FUSD Approved Locks.

4. FUSD shall inform contractor, before project begins, type of locks to be used.

5. Dedicated and Isolated Fiber Optical Cable with Ethernet Converters shall be used to interconnect Video Redistribution Server to Site HDcctv HD-SDI DVRs.

6. Video Redistribution Servers shall have dedicated twisted pair Category 6 cabling or Isolated Fiber Optical Cable with Ethernet Converters (dependent upon site conditions) connected to local site LAN.

7. Dedicated 110 volt 15-amp Power Outlets shall be mounted inside each Security Lockbox, to supply power to Video Redistribution Server.

8. Shall be installed in accordance to FUSD Master Specifications for Electrical Installations Sections 16010 – 16610.

9. No exposed cabling is allowed.

L. Installation of NTP Servers:

1. Each Site shall have one NTP Server installed in a central location.

2. NTP Servers shall be installed in a Security Enclosure.

3. Shall be installed with FUSD Approved Locks.

4. FUSD shall inform contractor, before project begins, type of locks to be used.

5. NTP Servers shall have dedicated twisted pair Category 6 cabling or Isolated Fiber Optical Cable with Ethernet Converters (dependent upon site conditions) connected to local site LAN.

6. Dedicated 110 volt 20-amp Power Outlets shall be mounted inside each Security Lockbox, to supply power to NTP Server.

7. Shall be installed in accordance to FUSD Master Specifications for Electrical Installations Sections 16010 – 16610.

8. No exposed cabling is allowed.

M. Wiring in Wire Closets and Cabinets:

1. Install conductors parallel to and at right angles to walls, bundle, lace, and train the conductors to terminal points with no excess.

2. Use wire distribution spools at points where cables are fanned or conductors turned.

3. Label each terminal with designations approved by the equipment supplier.

N. HD-SDI Camera, RS-485 Control Wire, RG 6/U 18/2 Coax Cable, and Fiber Optical Cable Labeling:

1. Labels shall be machine printed on appropriately sized vinyl or other approved material.

2. Lettering shall be black and printed on white frosted surface and covered by a minimum of two wraps of clear protective material.

3. One piece label is required.

4. Labels shall be placed on each end of the cable and at other weather-protected places where the cable is visible.

5. Sample labels shall be provided for approval before installation.

6. Label information shall be included on the “as-built” drawings.

7. HD-SDI Camera Labeling:

a. Shall be labeled internal to HDcctv HD-SDI DVR System.

b. Shall be labeled to represent the area being viewed.

8. RS-485 Control Wire Labeling:

a. Shall be labeled indicating “Camera Source” and “Destination” of cable.

b. Label shall read: *FROM Camera X to Room X*.

9. RG 6/U 18/2 Coax Cable Labeling:

a. Shall be labeled indicating “Camera Source” and “Destination” of cable.

b. Label shall read: *FROM Camera X to Room X*.

10. Fiber Cable Labeling:

a. Shall be labeled indicating “Source” and “Destination” of cable.

b. Label shall read: *FROM MDF (Room X) to Room X*.

O. New construction pathway:

1. In new construction, a 2" minimum conduit system terminated to 6" or larger square box with single gang or larger plaster rings minimum must be installed to each of the camera locations that are located on an inside or outside wall.

2. Conduit and square box size hall be determined by site conditions.

3. The conduit system must be stubbed into the inside attic space of the building that will provide a clear pathway to the nearest data closet.

4. All exposed conduit and enclosures shall be painted to match existing wall color schemes.

5. See the following sections for relevant detailed guidelines:

a. 02222: Excavating, Backfilling, Compaction.

b. 16700: Data Cabling and Equipment.

c. 16781: Video Distribution System.

d. 16010: Basic Electrical Requirements.

e. 16050: Basic Electrical Materials.

f. 16450: Grounding.

P. Installation of Security Camera Viewer Software:

1. Security Camera Viewer Software shall be installed on designated Site computer terminals.

2. Contractor shall work with Site Personnel and FUSD Representative to identify all computer terminals that will be used to view Site Security Camera System.

3. Contractor shall develop an inventory list, by site, of all computer terminals to be used with Viewer Software.

4. Inventory List shall include Make, Model, OS Version, Serial Number, DPN Number, and Name of Site Personnel computer terminal is assigned to.

5. All Site Personnel Computer Terminals shall be approved by FUSD Representative before installation of Viewer Software.

6. Inventory list shall be delivered to FUSD Representative in electronic format on USB V3.0 Storage Stick, and bound in printed paper format.

Q. Salvage of Existing Security Camera System Equipment:

1. All existing Security Camera System Equipment shall be salvaged in working order and returned to FUSD.

2. All existing Security Camera System Equipment shall be left functional and in place until new System is fully functional.

3. Contractor shall take care to not damage Equipment when being salvaged.

4. Contractor shall inventory all Equipment salvaged.

5. Contractor shall pack all Equipment in secure protective packaging.

6. Packaging shall be labeled to indicate Contents and Site from which Equipment was salvaged.

7. Contractor shall deliver packaged Equipment to a location designated by FUSD Representative.

3.02 PROJECT FINALIZATION:

A. Coax Cable Testing and Certification:

1. All Coax cable and shall be tested following installation.

2. Testing shall include continuity of coax and 18 gauge wires as needed.

3. Impedance of coax shall be tested to assure compliance of manufacture specification in relation to total footage installed.

4. Use commercially manufactured field tester with hard copy of test results.

5. Three copies (hard copy) of the test results shall be delivered to the F.U.S.D. personnel prior to project acceptance.

6. Mechanical testing of BNC connectors shall be done by apply quick pulling pressure to insure proper seal of connector onto coax cabling.

B. Fiber Optic Cable Testing and Certification:

1. All Fiber Optic Cable shall be tested using an approved Optical Power Meter.

2. Power Meter measurements shall be made from both ends of the cable.

3. Measured results shall be within cable manufacturer's specifications.

4. Cable shall be tested at both 850 nm and 1300 nm for Multi-mode fiber and at 1300 and 1550 nm for Single-mode fiber.

5. Any cable or termination, which does not meet manufacturer's specifications, shall be replaced and retested.

6. Provide three copies (hard copy), bounded, of the test results for Owner's approval before project acceptance.

7. All Power Meter Testing shall be done in the presence of a District appointed Observer.

C. Over-all System Testing:

1. Contractor shall test each camera location utilizing a method which tests the functionality of HDcctv HD-SDI camera, HDcctv HD-SDI DVR recording capability and quality of images captured.

2. The method employed shall use real time images and clearly indicate area of view.

3. Any adjustments needed to equipment will be finalized with this test.

4. District personal will approve all final quality of image and areas of coverage before project will be accepted.

D. All Testing shall be done in the presence of a District appointed Observer.

E. As-Built Drawings:

1. Before project will be accepted, the contractor will provide as-built drawings.

2. Drawings shall be three (3) hard copies in size "B" (11 x 17) format.

3. Finalized form shall also be submitted electronically on an USB V3.0 stick drive in three (3) formats: (1) AutoCAD Lite, (2) PDF, and (3) WebGate Control Center Professional (4.x), and in three (3) hard copies sized "B" (11 x 17).

4. Maps shall show only one level per page of sites that have multiple levels.

5. Maps shall indicate location of cameras, nearest wiring cabinet that HDcctv HD-SDI cameras connect to, and verified area of view for each HDcctv HD-SDI camera.

6. HDcctv HD-SDI Cameras will be clearly labeled and correspond to labeling in DVR system.

7. A sample As-Built Drawing shall be provided as an example of expected finial format.

END OF SECTION

FRESNO UNIFIED SCHOOL DISTRICT
REV DATA: UNK.

SECTION 28 31 00 – FIRE DETECTION AND ALARM

PART 1 – GENERAL

1.01 DESCRIPTION

A. Work Included:

1. The furnishing of all labor, equipment, materials and performance of all operations in connection with the installation of the Fire Alarm System (FAS) as shown on the drawings and as herein specified.

2. The complete installation shall conform to the applicable sections of NFPA 72 2016 Ed., Local Code Requirements, Fresno Fire Prevention Bureau and California Electrical Code (CEC).

3. All equipment, devices and cables shall be listed by Underwriters' Laboratories, Inc. and or approved by Factory Mutual for the purpose of fire alarm systems and shall be listed with the California State Fire Marshal (CSFM).

4. It is the intent of the Contract Documents to provide an installation complete in every respect. In the event that additional details or special construction is required for work indicated or specified in this Section or work specified in other Sections, it shall be the responsibility of the Contractor to provide all material and equipment which is usually furnished with such systems in order to complete the installation, whether mentioned herein or not.

1.02 DESIGN REQUIREMENTS

A. The Fire Detection System shall be responsible for continually supervising and monitoring by zone the following initiating, signaling and monitoring circuits designated as:

1. Manual fire pull stations.

2. Smoke and heat detectors, including those installed under other Sections.

3. Alarm signaling circuits (alarm bells and visual alarm unit).

4. Remote Annunciator.

5. The system controls shall be Underwriters' Laboratory listed for power-limited applications per CEC 760.

B. The (FAS) configurations for the projects shall be as follows:

1. Speakers and strobes shall be used for fire alarm signaling. Class change signaling shall be independent of the fire alarm system.

2. Activation of duct smoke detectors in the Air Handling ducts shall be annunciated at the main Fire Alarm Control Panel.

1.03 DISTRICT APPROVAL

A. All Fire Alarm, Signal and Control Equipment shall be approved by the Fresno Unified School District (FUSD) in addition to other required approvals.

B. Certification: Installation of the Fire Alarm System shall not be started until drawings, including State Fire Marshal listed numbers of all fire alarm components, are submitted to and approved by the State Fire Marshal (DSA). Written certification by the fire alarm equipment distributor or manufacturer shall be submitted to the Architect and the State Fire Marshal stating that the system and its component parts are as "approved and listed" by the State Fire Marshal and that the installation conforms in all respects to the requirements set forth in Article 72, Title 24, California Administrative Code.

C. All equipment described has been established by Fresno Unified School District as the standard for service product in the School District. Fresno Unified School District has standardized on Potter, Mircom, and GE Security EST Fire & Life Safety as the sole manufacturers of its Fire Alarm master equipment to reduce parts required for repair and expansion. We have also chosen this manufacturer because of reduced personal training and high product reliability.

D. All equipment to be supplied under this section shall be 100% solid state in design.

1.04 SUBMITTALS:

A. All submittals shall be made in accordance with Section 01300.

B. Shop Drawings: Show equipment locations, wiring schematics, details, panel's configuration and size and a point-to-point schematic of circuits and zone schedules. Include front elevations, cabinet dimensions, type of mounting, doors, barriers, catalog number of locks, and finishes for all terminal cabinets. Show interfaces to equipment furnished by others, identifying numbers of wires and termination requirements. Responsibility for each end of the interfaces shall be noted.

C. Complete descriptive data indicating Underwriters' Laboratories and California State Fire Marshal listings for all system components.

D. Complete sequence of operations of the system.

E. Complete system wiring diagrams for components connected to the system and interfaces to existing equipment.

F. A copy of any State or Local Fire Alarm System equipment approvals.

G. Provide one copy of acceptance test procedures for review.

H. Provide supplier’s qualifications indicating years in business, service policies, warranty definitions and list of similar installations.

I. Equipment, other than specified, will be considered for approval provided it meets previous Items A through H and the following is submitted in writing by the Electrical Contractor to the Engineer to allow approval at least 14 days before the bid date:

1. Complete lists, descriptions and drawings of materials to be used, including all (CSFM) listing numbers.

2. A complete riser diagram of fire alarm system.

3. A complete list of current drain requirements during normal supervisory conditions, trouble conditions and alarm system.

4. Battery standby calculations showing total standby needed to meet the system requirements as specified.

5. If any attempt is made to substitute that brand of equipment specified it shall be the Contractor's obligation to submit the above data and information to allow the specifying engineer time to consider the equality of the substituted items to that specified. It is the Contractor's responsibility to meet the entire intent of the Specifications. Deviations from the specified items shall be at the risk of the Contractor until the date of final acceptance by the Architect, Engineer and Owner's representative.

6. Approved submittals on substitute equipment shall only allow the Contractor to proceed with installing a substituted item and shall not be considered equal until such time as the Architect, Engineer and the Owner's representative have completely accepted the substituted item. All cost for removal, relocations or replacement of a substituted item shall be at the risk of the Electrical Contractor.

J. Fire Alarm System shall be supplied from a single source and shall be labeled with the manufacturer's name and logo on all system equipment and devices.

1.05 QUALITY ASSURANCE:

A. Shall be done by qualified Contractor holding C-10 and other licenses required by authorities having jurisdiction.

B. Each system shall be installed by an authorized manufacturer's representative with duly authorized local representation who can, upon request, give evidence satisfactory to the Engineer that he maintains a fully equipped service organization stocking the manufacturer's standard parts and capable of furnishing, in the sole judgment of the Engineer, adequate inspections and service to the system. All signal equipment shall be supplied and installed by a licensed and bonded signal contractor holding a valid California State Electrical Contractor's license with the proper endorsements for performing work of this specification.

1.06 WARRANTY:

A. The Contractor shall warrant the completed Fire Alarm System wiring and equipment to be free from inherent mechanical and electrical defects for a period of one year from the date of the completed and certified test or from the date of first beneficial use.

B. Trouble Calls: The Contractor shall guarantee response to a trouble call within 24 hours after the receipt of such a call.

C. The equipment manufacturer shall make available to the Owner a Maintenance Contract Proposal to provide a minimum of two inspections and tests per year in compliance with NFPA 72 guidelines.

1.07 PERFORMANCE:

Furnish and install a complete Fire Alarm System as described herein and as shown on the drawings to be wired, connected, and left in first class operating condition. The system supplied under this specification shall be a microprocessor-based direct wired, multi-priority peer-to-peer networked system. The system shall utilize independently addressed, microprocessor-based smoke detectors, heat detectors, and modules as described in this specification. It shall be complete with all necessary hardware, software and memory specifically tailored for this installation. It shall be possible to permanently modify the software on site by using a plug-in programmer.

1.08 DISCREPANCIES

Discrepancies and/or conflicts noted between drawings and written specifications should be addressed in writing and submitted to the engineer and (FUSD) for clarification.

1.09 SCOPE OF WORK

A. The fire alarm scope of work shall consist of the following minimum requirements.

1. Fire Control Panels and Annunciators.

a. New Fire alarm control panels shall be provided in electrical closet or in fire control room if provided. Additional related remote data gathering panels shall be provided as needed.

b. A new remote LCD annunciator shall be provided at the main administration office. The annunciator shall report activity and control all fire alarm functions in the buildings. All control features shall be disabled if a separate fire control room is provided.

c. All FACP and remote data gathering panels shall complete the "network" between all areas of the campus and building(s) allowing the units report individual zoning information to Fresno Unified's central receiving station. Zoning shall be in compliance with plans and specifications furnished by the engineer and approved by Fresno Unified personnel.

d. Existing FACP shall be removed upon completion and returned to (FUSD).

B. Initiating Devices

1. All initiating devices shall be new addressable devices as specified.

2. Smoke detectors shall be added as follows:

a. All public and private areas and all rooms for 100% full area coverage.

b. All Mechanical, Electrical, Telephone, Elevator, Generator, etc.

c. At each elevator lobby.

d. Each side of doors magnetically held open.

e. Elevator Shafts if required per code.

f. Beam pockets shall be covered as needed in order to meet current code requirements.

3. Manual pull stations shall be added as follows:

   a. Next to the main remote annunciator or FACP in admin office

   b. Pull stations shall be mounted 48 inches above the finished floor, as measured on handle. Pull stations currently mounted at the incorrect height shall be lowered accordingly when replaced.

   c. All surface mount pull stations shall be provided w/ manufacturer's listed back box.

4. Duct Detectors shall be added as follows:

   a. Supply and Return Ducts for Fans 2000 CFM and greater.

   b. Smoke and Smoke/Fire Dampers. Duct Detectors shall be substituted by Area Smoke Detectors if allowable by code.

   c. Remote LED's w/ test stations shall be provided for all duct detectors located above ceilings or out of sight.

   d. The test stations shall be located the shortest possible distance from the duct detector and in a location that is easily visible and accessible.

5. Heat Detectors (135 deg) shall be added as to the following:

   a. Elevator Machine Rooms

   b. Elevator Shafts if required per code.

   c. Kitchens

   d. Trash Rooms

   e. Restrooms

   f. Custodial closets

6. Heat Detectors (194 deg) fixed temperature shall be added at Attic or above ceiling space and outside locations as required by code.

7. Sprinkler tamper and water flow switches shall be individually monitored:

    a. Provide one (1) supervisory module circuit for each sprinkler valve supervisory and water flow switch.

    b. Tamper switches in fire pump room only may be grouped together as allowed per coded.

    c. Existing water flow and tamper switches may need to be re-adjusted by the contractor to meet code. Water flow/Tamper switches unable to be adjusted to meet code shall be repaired/replaced by the owner or provided as an addition to the contract.

C. Notifications Devices:

1. Temporal Speakers shall be added throughout public and private spaces to achieve 15db above ambient as needed to meet current code requirements.

2. Strobes shall be added as follows:

    a. All Corridors, Class Rooms, Restrooms, Parking Garages, Elevator Lobbies and all other Common Areas.

    b. Storage areas as required by code.

    c. Parking Garage covering drive path only;

        i. No more than 50 linear feet apart down the center of the driveway.

        ii. Mounted a maximum distance of 25 feet away from the end of the driveway.

        iii. Minimum intensity shall be 110cd.

    d. Strobes that are required in sleeping areas shall be located within 16 feet of pillow and have a minimum intensity of 110cd. For strobes located less than 24 inches from ceiling the minimum intensity shall be 117cd.

    e. Sized per ADA coverage and NFPA 72.

    f. Combination Horn/Strobes may be used as needed.

    g. Additional strobes shall be added in ADA rooms as needed.

h. Areas having more than 2 strobes in the field of view shall be synchronized.

2. Booster Power Supplies shall be distributed throughout the facility to provide the power necessary for all indicating devices. Power Supplies shall be initiated by Synchronized Signal Modules.

3. Other device/controls shall be added as follows.

a. Primary, Alternate elevator recall and shunt trip shall be required for each elevator.

b. The fire alarm panel shall monitor individual Fire Pump and Emergency Generator “Run” & “Fail” status for each unit. Run & Fail Status shall report as Monitor points.

c. Interface with any door lock\card accesses release circuits. An addressable control relay shall be provided at each lock location obstructing the emergency exit path. Stairwell door locks may have one common control.

d. Interface and provide air-handling systems shutdown control. An addressable control relay shall be provided for each air handler unit.

e. Interface and provide non-managed smoke damper shutdown. Provide addressable control relays at each electrical panel where smoke dampers are powered.

f. Provide and Interface with magnetic door holder release circuits. Provide addressable control relays as required.

g. Magnetic door holders shall be provided as part of this section at elevator lobby doors and all cross-corridor doors and as required per code.

1.10 SEQUENCE OF OPERATIONS

A. General Alarm Operation: Upon alarm activation of any area smoke detector, duct smoke detector, heat detector, manual pull station, sprinkler water flow, the following functions shall automatically occur:

1. The internal audible device shall sound at the control panel or command center.

2. The LCD Display shall indicate all applicable information associated with the alarm condition including zone, device type, device location and time/date.

3. All system activity/events shall be documented on the system printer.

4. Any remote or local annunciator LCD/LED's associated with the alarm zone shall be illuminated.

5. The following notification signals and actions shall occur simultaneously:

   a. A signal shall be sounded on fire floors (zones). The signal shall be a Temporal 3 tone.

   b. Activate visual strobes on the fire floors (zones). The visual strobe shall stop operating when the "Alarm Silence" is pressed.

   c. Transmit signal to the building automation system (if applicable) and/or shutdown all HVAC units serving the floor of alarm.

   d. Transmit signal to the central station with point identification.

   e. Activate automatic smoke control sequences (if applicable).

   f. All stairwell/exit doors shall unlock throughout the building.

   g. All self-closing fire/smoke doors held open shall be released.

   h. All automatic events programmed to the alarm point shall be executed and the associated outputs activated.

B. Elevator Lobby / Equipment Room Detectors: Upon alarm activation of any elevator lobby smoke detector or equipment room detector the following functions shall automatically occur:

1. Perform general alarm sequence above.

2. Elevator Lobby smoke detectors shall recall the elevators to primary floor.

3. Elevator Lobby smoke detectors located on the primary recall floor shall recall the elevator the alternate floor.

4. Equipment room smoke detectors shall recall the elevator to the primary floor.

5. Activation of the Equipment room heat detector shall initiate the shunt trip in the associated elevator equipment room.

C. Supervisory Operation: Upon supervisory activation of any sprinkler valve supervisory switch, fire pump off-normal, clean agent fire suppression system trouble, the following functions shall automatically occur:

1. The internal audible device shall sound at the control panel or command center.

2. The LCD display shall indicate all applicable information associated with the supervisory condition including; zone, device type, device location and time/date.

3. All system activity/events shall be documented on the system printer.

4. Any remote or local annunciator LCD/LED's associated with the supervisory zone shall be illuminated.

5. Transmit signal to the central station with point identification.

D. Trouble Operation: Upon activation of a trouble condition or signal from any device on the system, the following functions shall automatically occur:

1. The internal audible device shall sound at the control panel or command center.

2. The LCD keypad display shall indicate all applicable information associated with the trouble condition including; zone, device type, device location and time/date.

3. All system activity/events shall be documented on the system printer.

4. Any remote or local annunciator LCD/LED's associated with the trouble zone shall be illuminated.

5. Transmit signal to the central station with point identification.

E. Monitor Activation: Upon activation of any device connected to a monitor circuit (fire pump/emergency generator status), the following functions shall automatically occur:

1. The LCD display shall indicate all applicable information associated with the status condition including; zone, device type, device location and time/date.

2. All system activity/events shall be documented on the system printer.

3. Any remote or local annunciator LCD/LED's associated with the status zone shall be illuminated.

1.11 SYSTEM DESIGN PARAMETERS

A. Standby power: The standby power supply shall be an electrical battery with capacity to operate the system under maximum supervisory load for twenty four (24) hours and capable of operating the system for fifteen (15) minutes of evacuation alarm on all devices, operating at maximum load. The system shall include a charging circuit to automatically maintain the electrical charge of the battery. The system shall automatically adjust the charging of the battery to compensate for temperature.

B. Voltage Drop: The point-to-point Ohm’s Law voltage drop calculations of all alarm system circuits shall not exceed 10%.

C. Spare Capacity: The system shall be engineered to accommodate 20% spare capacity on each individual loop, and 20% spare on system power supplies.

D. Circuiting Guidelines

1. Initiating Device Circuits; Where necessary, conventional initiating device circuits (i.e. water flow switches, valve supervisory switches, fire pump functions, etc.) shall be Class B (Style "A" or "B").

2. Notification Appliance Circuits; All notification appliance circuits shall be Class B. The notification circuits shall be power limited. Non-power limited circuits are not acceptable.

3. Signaling Line Circuits: Addressable Analog Devices

   a. The signaling line circuit connecting to addressable/analog devices including, detectors, monitor modules, control modules, isolation modules, intrusion detection modules and notification circuit modules shall be Class B.

   b. Each addressable analog loop shall be circuited so device loading is not to exceed 80% of loop capacity in order to leave for space for future devices.

4. Signaling Line Circuits: Data & Audio for FACP & Annunciator Network; The signaling line circuit connecting network panel/nodes, annunciators, command centers, shall be Class A. The media shall be copper except where fiber optic cable is specified on the drawings.

PART 2 – PRODUCTS

2.01 MANUFACTURER:

Refer to plans.

2.02 GENERAL:

A. All equipment and components shall be the manufacturer's current model. The materials, appliances, equipment and devices shall be tested and listed by a nationally recognized approval agency for use as part of a protected premises (fire alarm) system.

B. The contractor shall provide, from the acceptable manufacturer's current product lines, equipment and components, which comply, with the requirements of these specifications. Equipment or components, which do not provide the performance and features, required by these specifications are not acceptable, regardless of manufacturer.

C. All System components shall be the cataloged products of a single supplier. All products shall be UL listed by the manufacturer for their intended purpose.

D. All control panel assemblies and connected field appliances shall be both designed and manufactured by the same company, and shall be tested and cross-listed as to ensure that a fully functioning system is designed and installed.

2.03 CONDUCTORS

A. The requirement of this section apply to all system conductors, including all signaling line, initiating device, notification appliance, auxiliary function, remote signaling, AC and DC power and grounding/shield drain circuits, and any other wiring installed by the Contractor pursuant to the requirements of these Specifications.

B. All circuits shall be rated power limited in accordance with CEC Article 760 section III.

C. Installed in conduit or enclosed raceway.

D. All new system conductors shall be of the type(s) specified herein.

E. All initiating circuit, signaling line circuit, AC power conductors, shield drain conductors and grounding conductors, shall be solid copper, stranded or bunch tinned (bonded) stranded copper.

F. All signaling line circuits, including all addressable initiating device circuits shall be 18 AWG minimum multi-conductor jacketed twisted cables or twisted shielded or as per manufacturer's requirements.

G. All non-addressable initiating device circuits, 24 VDC auxiliary function circuits shall be 18 AWG minimum or per manufacturer's requirements.

H. Not used.

I. All audible/visual notification appliance circuits shall be 12 AWG minimum twisted pairs or twisted pairs shielded or per manufacturer's requirements.

J. Not used.

K. Not used.

L. Not used.

M. Splices; No splices shall be installed in conduit, Christy boxes or any inaccessible place. All splices shall be made on terminal blocks specifically designed for that purpose in terminal cabinets or locations as specifically approved by the Engineer.

N. All underground conduit runs shall only use stranded type wires.

O. Terminal Barrier Strips; Cinch 142 series barrier strips (minimum 6 points) for Fire Alarm system. Provide minimum two (2) space separation points between types of system cables. Strips shall include provisions for up to four (4) spare termination points. Ensure that system circuits loops are located on adjacent termination points on the barrier strip.

P. Wire terminators to devices and on terminal barrier strips shall be with “spade” type terminal connections (Thomas and Betts Sta-Kon or Engineer approved equivalent). Contractor shall use an approved Thomas and Betts Sta-Kon lugging tool.

Q. All cables shall be labeled with Panduit Label, size MP-150c thru MP-350. The size will depend on the amount of information needed on each label. All labels shall contain information as to the source and the destination of the wire including the location and terminal can numbers.

2.04 RACKS, TERMINALS, CABINETS AND SPECIAL ASSEMBLIES:

A. Wiring shall be neatly bundled, fanned, tagged and laced. Leave minimum three inch horizontal wiring between terminal block connection and fan.

B. Terminate incoming (homerun) cables on left of terminal block; with cables to devices terminated on right side.

2.05 CONDUIT RACEWAY

A. All systems and system components listed to UL864 Control Units for Fire Protective Signaling Systems maybe installed within a common conduit raceway system, in accordance with the manufacture's recommendations. System(s) or system components not listed to the UL864 standard shall utilize a separate conduit raceway system for each of the sub-systems.

B. The requirements of this section apply to all system conduits, raceways, electrical enclosures, junction boxes, pull boxes and device back boxes.

C. All system conduits shall be of the sizes and types specified.

D. All system conduits shall be EMT, 3/4 - inch minimum, except for flexible metallic conduit used for whips to devices only, maximum length 6 feet, 3/4-inch diameter, minimum.

E. All system conduits, which are installed in areas, which may be subject to physical damage or weather, shall be IMC or rigid steel, 3/4 -inch minimum.

F. Conduits shall be sized according to the conductors contained therein. Cross sectional area percentage fill for system conduits shall not exceed 40%.

G. Existing conduit raceway system may be re-used where possible.

H. All fire alarm conduit systems shall be routed and installed to minimize the potential for physical, mechanical or by fire damage, and so as not to interfere with existing building systems, facilities or equipment, and to facilitate service and minimize maintenance.

I. All conduits, except flexible conduit whips to devices, shall be solidly attached to building structural members, ceiling slabs or permanent walls. Conduits shall not be attached to existing conduit, duct work, cable trays, other ceiling equipment, drop ceiling hangers/grids or partition walls, except where necessary to connect to initiating, notification, or auxiliary function devices.

J. All system conduits, junction boxes, pull boxes, terminal cabinets, electrical enclosures and device back boxes shall be readily accessible for inspection, testing, service and maintenance.

K. All penetration of floor slabs and firewalls shall be sleeved (1" conduit minimum) fire stopped in accordance with all local fire codes.

L. All junction box covers shall be painted red.

PART 3 – EXECUTION

1.01 INSTALLATION

A. All equipment and components shall be installed in strict compliance with each manufacturer's recommendations. Consult the manufacturer's installation manuals for all wiring diagrams, schematics, physical equipment sizes, etc. before beginning system installation.

B. The entire system shall be installed in a workmanlike manner, in accordance with approved manufacturer's wiring diagram.

1.02 REQUIREMENTS

A. All new manual pull stations shall be mounted 48 inches above the finished floor, as measured on handle.

B. All new audio/visual devices shall be mounted at a minimum of 80 inches and no more than 96 inches above the finished floor, as measured on strobe center. Devices shall be mounted no less than 6 inches from the ceiling.

C. No area smoke detectors shall be mounted within 36 inches of any HVAC supply, return air register or lighting fixture.

D. No area smoke or heat detector shall be mounted within 12 inches of any wall.

E. All fire alarm devices shall be accessible for periodic maintenance. Should a device location indicated on the Contract Drawings not meet this requirement, it shall be the responsibility of the installing contractor to bring it, in writing, to the attention of the Project Engineer. Failure to bring such issues to the attention of the Project Engineer shall be the exclusive liability of the installing Electrical Contractor.

F. End of Line Resistors shall be furnished as required for mounting as directed by the manufacturer. Devices containing end-of-line resistors shall be appropriately labeled. Devices should be labeled so removal of the device is not required to identify the EOL device. Wear the end of line resistors are not part of the device then they should be located in terminal cans or cabinets as required.

G. All addressable modules shall be mounted within 36 inches of the monitored or controlled point of termination. This shall include, but is not necessarily limited to, fan

shutdown, elevator recall, shunt trip, sprinkler status points, or door release. Label all addressable modules as to their function.

H. All wiring shall be color-coded throughout, to National Electrical Code standards.

I. Power-limited/Non-power-limited CEC wiring standards SHALL BE OBSERVED.

J. Auxiliary relays shall be appropriately labeled to indicate "FIRE ALARM SYSTEM" and their specific function (i.e. FAN S-1 SHUTDOWN).

1.03 TEST & INSPECTION

A. All fire alarm testing shall be in accordance with National Fire Alarm Code, NFPA 72 - 2016, Chapter 7.

B. The system shall be pre-tested and documented prior to the final inspection by the AHJ. The owner shall be notified of the pretest 48 hours in advance and shall witness this test if desired.

C. The pre-test shall include the following:

1. All intelligent analog addressable devices shall be tested for current address, sensitivity, and user defined message.

2. All wiring shall be tested for continuity, shorts, and grounds before the system is activated.

3. Proper operation and execution of all its sequences

D. Upon completion of the new system or an upgrade to an existing system, the contractor shall provide a minimum of two personnel for testing. Testing shall be done in the presence of an assigned Fresno Unified School District employee. The contractor shall provide reasonable notification prior to scheduling of any tests, so that Fresno Unified personnel can be in attendance. At the final test and inspection, a factory-trained representative of the system manufacturer shall demonstrate to the Owner, his representative, and the local fire inspector all its sequence of operations and any additional tests required by the AHJ. In the event the system does not operate properly, the test may be terminated. Corrections shall be made and the testing procedure shall be repeated until it is acceptable to the Owner, his representatives and the fire inspector. If the Fire Marshall Is required to be present during testing, it shall be the contractor's responsibility to notify the fire department having jurisdiction.

1.04 TRAINING:

A. The System Supplier shall schedule and present a minimum of (2) 4 hour segments of documented formalized instruction for the building owner, detailing the proper operation of the installed System. One training segment shall be available at the completion of the project. The second training segment may be required within the warranty period.

B. The instruction shall be presented in an organized and professional manner by a person factory trained in the operation and maintenance of the equipment and who is also thoroughly familiar with the installation.

C. The instruction shall cover the schedule of maintenance required by NFPA 72 and any additional maintenance recommended by the system manufacturer.

D. Instruction shall be made available to the Local Municipal Fire Department if requested by the Local Authority Having Jurisdiction.

1.05 SYSTEM UPGRADES:

A. When upgrading an existing system, the existing fire alarm shall be tested in the presence of a Fresno Unified employee prior to any work being started by a contractor. Upon completion of testing, it shall be the contractor's responsibility to note any discrepancy with the existing system. It will be contractor's responsibility to provide and complete working system, minus any discrepancies noted.

B. When upgrading an existing system, all end of line resistors shall be changed out to meet manufacturer's specifications for each individual fire panel. The contractor shall make a reasonable effort to locate the end of line resistors. If locations cannot be determined Fresno Unified shall provide assistance to the contractor.

C. When specifications call for a zone to be added, the contractor shall provide all equipment and terminations to make a completed working system, including all equipment necessary to annunciate the system to Fresno Unified's central station. It will be the contractor's responsibility to ensure that the equipment has sufficient space to accommodate extra zones.

D. When specifications call for the removal of existing equipment all equipment shall be returned to Fresno Unified School District's Electronics Shop.

END OF SECTION

SECTION 31 11 00 - SITE CLEARING

PART 1 - GENERAL

1.1 RELATED DOCUMENTS

A. Drawings and general provisions of the Contract, including General and Supplementary Conditions and Division 01 Specification Sections, apply to this Section.

1.2 SUMMARY:

A. This Section includes the following:

1. Provide all material, labor, equipment and services necessary to completely clear and demolish all materials, accessories and other related items necessary to complete the Project as indicated by the Contract Documents.

B. RELATED SECTIONS:

1. Contract General Conditions and Division 1, General Requirements
2. Section 31 20 00 – Earthwork: Excavation, Filling, and Grading
3. Section 31 22 22 – Soil Materials
4. Section 31 23 33 – Trench Excavation and Backfill

1.3 SUBMITTALS

(NOT APPLICABLE)

1.4 QUALITY ASSURANCE

A. Regulatory Requirements:

1. In accordance with Specification Section GENERAL REQUIREMENTS, and the following:

a. Materials and equipment used for this project shall comply with the current applicable regulations of the California Air Resources Board [CARB] and the Environmental Protection Agency [EPA].

B. Meetings:

1. Minimum agenda shall be to discuss coordination of upcoming work, review the work progress, discuss field observations, identification of any potential problems which may impede planned progress; corrective measures to regain projected schedule; and maintenance of quality and work standards.
2. Meetings shall include Pre-Clearing and Demolition Meetings.

3. Participants (or designated representative of) invited to attend each of the above meetings shall be as follows:

    a. Contractor.
    b. Owner.
    c. Architect.
    d. Testing Laboratory.
    e. Local Governing Authorities as applicable.
    f. Utility Representatives as applicable.
    g. Owner's Inspector.
    h. Clearing and Demolition Subcontractor.
    i. Other subcontractors, as appropriate (including any accessory subcontractors).

1.5 PROJECT CONDITIONS OR SITE CONDITIONS

A. Dust Control

1. Contractor shall comply with all requirements of the San Joaquin Valley Air Pollution Control District (SJVAPCD) for construction activity related to this project.
2. A Dust Control Plan, as required by the SJVAPCD, may be required for this project. Contractor shall be responsible for preparing said Dust Control Plan, submitting to the SJVAPCD for review and approval, and paying all SJVAPCD review and permitting fees related to the Dust Control Plan.
3. No construction activity related to this project may begin until Contractor has secured an approved Dust Control Plan, if one is required.
4. Contractor shall be solely responsible to implement all requirements of the Dust Control Plan throughout the life of this contract.
5. Should fines or fees be levied against the Project for violations of the Dust Control Plan and/or related SJVAPCD regulations, Contractor shall be responsible to pay all said fines or fees and to implement all mitigation measures required by SJVAPCD in order to bring the construction activity into compliance with SJVAPCD regulations. The costs for any such fines or fees shall be included in the lump sum price bid for work under this contract and no additional payment will be made therefor.

B. Existing Conditions:

1. Examine site and compare it with the drawings and specifications. Thoroughly investigate and verify conditions under which the work is to be performed. No allowance will be made for extra work resulting from negligence or failure to be acquainted with all available information concerning conditions necessary to estimate the difficulty or cost of the work.
2. Conduct work so as not to interfere unnecessarily with adjacent roads, streets, drives, walks or occupied facilities.

    a. Do not close or obstruct streets, walks, or other adjacent occupied or used facilities without permission from Owner and Authorities having jurisdiction.
    b. Provide alternate routes around closed or obstructed traffic ways if required by Authorities having jurisdiction.

3. Locate and identify utilities.

   a. Call a Local Utility Locator Service (USA – "Underground Service Alert" – [800] 227-2600) for the task of locating any applicable utilities in the area where the Project is located.

4. Carefully remove items indicated to be salvaged and store on Owner's premises at the Owner's direction.

PART 2 - PRODUCTS

(NOT APPLICABLE)

PART 3 - EXECUTION

3.1 PREPARATION

A. Coordination:

1. Coordinate work under this specification section with work specified under other sections to ensure proper and adequate interface of work.

B. Protection:

1. Protect and maintain all benchmarks and survey control points from disturbance during clearing and demolition operations.
2. Provide erosion-control measures to prevent soil erosion and discharge of soil-bearing water runoff or airborne dust to adjacent properties.
3. Furnish and install temporary protection/barrier fencing surrounding the limits of demolition.
4. Protect trees, plant growth, and features not specifically designated for removal. Locate and clearly flag trees and vegetation to remain or to be relocated.
5. Protect existing improvements designated to remain from damage during construction.

   a. Restore damaged improvements to their original condition, as acceptable to the Owner.

3.2 CONSTRUCTION

A. Shrub and Weed Removal:

1. Remove weeds and rooted topsoil to a minimum eight (8) inch depth and temporarily stockpile as needed for re-use in finished grading of landscape areas. Remove excess material from the site.
2. Where existing vegetation is to be replaced by new materials, remove contaminated or excess soil from the site and legally dispose of off-site.

B. Existing Site Improvements Removal:

1. Remove existing above and below grade improvements as necessary to facilitate new construction.

   a. Remove concrete slabs, sidewalk, curbs, mow strips, gutters, and fence post footings.

      1) Neatly saw-cut length of existing pavement to remain before removing existing pavement unless existing full-depth joints coincide with line of demolition. Saw-cut faces vertically.

   b. Remove indicated utility improvements within the limits of construction.

      1) Excavate for and disconnect utilities designated to be removed. Seal or cap off underground.
      2) Coordinate removal and/or relocation of utilities with the appropriate utility agencies.

   c. Where existing underground utilities, irrigation pipes, wells, leach fields, or underground tanks are encountered, they must be removed or moved to a point at least 5 feet horizontally outside the proposed building and 3 feet horizontally outside the concrete flatwork or pavement construction areas. All resultant cavities must be backfilled with engineered fill.

C. Existing Utilities to Remain or be Relocated:

1. Do not interrupt utilities serving facilities occupied by Owner or others unless permitted under the following conditions and then only after arranging to provide temporary utility services according to requirements indicated:

   a. Notify Architect and the Owner not less than seven (7) days in advance of proposed utility interruptions.
   b. Arrange to shut off indicated utilities with utility companies and Owner.

D. Disposal:

1. Legally dispose of all debris (surplus soil materials, unsuitable topsoil, obstructions, demolished materials, waste materials, trash, etc.) resulting from clearing, grubbing, demolition and from construction. Disposal of all materials shall be at a location secured by the Contractor off of the Owner's property.

END OF SECTION

SECTION 31 20 00 - EARTHWORK: EXCAVATION, FILLING AND GRADING

PART 1 - GENERAL

1.1 RELATED DOCUMENTS

A. Drawings and general provisions of the Contract, including General and Supplementary Conditions and Division 01 Specification Sections, apply to this Section.

1.2 SUMMARY:

A. This Section includes the following:

1. Excavating soil and other material for surface improvements.
2. Placing fill.
3. Compaction of existing ground and fill.
4. Preparation of subgrade for other improvements.
5. Grading of soil.

B. RELATED SECTIONS

1. Contract General Conditions and Division 1, General Requirements
2. Section 31 11 00 – Site Clearing
3. Section 31 22 22 – Soil Materials
4. Section 31 23 33 – Trench Excavation and Backfill

1.3 REFERENCES

A. ANSI/ASTM D1557 - Test Methods for Moisture-Density Relations of Soils and Soil Aggregate Mixtures Using 10 lb (4.54 Kg) Rammer and 18 inch (457 mm) Drop.

B. Geotechnical Report prepared by RMA GeoScience, Inc., project number 17G-2397-0, dated by November 9, 2018; for reference only, and at the cost of reproduction

1.4 DEFINITIONS

A. Utility: Any buried or above ground pipe, conduit, cable, associate device or appurtenances, or substructure pertaining thereto.

1.5 SUBMITTALS

A. Product Data:
1. Information indicating the source of all import material, the fill material type and where it is to be used, and approval of the District's Inspector of Record for incorporation of import material into the Work.

B. Material Test Reports:
   1. Classification of Soils.
   2. Compaction Characteristics of Soils.
   3. Density and Unit Weight of Soils in Place.
   4. Import material must be approved by District's inspector, Geotechnical Engineer and the California Department of Toxic Substances Control (DTSC) prior to being brought on site.

C. Project Closeout: In accordance with Specification Section PROJECT CLOSEOUT.
   1. Drawings indicating the extent and depth of all engineered fill, and overexcavation and recompaction. This information shall be a part of the Project "As-Built" and Project "Record" Documents in accordance with the Specification Section PROJECT DOCUMENTS.

1.6 QUALITY ASSURANCE

A. Installer:

   1. Qualifications:

      a. Engage an experienced Installer who has successfully completed three (3) projects of similar scope and size to that indicated for this project within the past 5 years.

B. Regulatory Requirements:

   1. In accordance with Specification Section REGULATORY REQUIREMENTS and the following:

      a. CARB — Materials and equipment used for this Project shall comply with the current applicable regulations of the California Air Resources Board [CARB].
      b. CF — City of Fresno, Codes and Ordinances
      c. EPA — Environmental Protection Agency.
      d. CAL/OSHA — Comply with all provisions of the Construction Safety Orders and the General Safety Orders of the California Division of Occupational Safety and Health, as well as all other applicable regulations as they pertain to the protection of workers from the hazard of caving ground excavations.
      e. DTSC — Comply with all requirements of DTSC and California Department of Education regarding soil testing for potential contaminants.

C. Certificates:

   1. Installer's certification that all Earthwork installation meets or exceeds the requirements of this specification.
   2. Contractor's certification (on Contractor's letterhead paper) that the Earthwork materials and installation meets or exceeds the requirements of this specification.

D. Meetings:

1. Pre-Installation: Schedule prior to the start of work.

   a. Coordinate the work with other work being performed.
   b. Identify any potential problems, which may impede planned progress and proper installation of work regarding quality of installation and warranty requirements.

2. Progress: Scheduled by the Contractor during the performance of the work.

   a. Review for proper installation of work progress.
   b. Identify any installation problems and acceptable corrective measures.
   c. Identify any measures to maintain or regain project schedule if necessary.

3. Completion: Scheduled by the Contractor upon proper completion of the work.

   a. Inspect and identify any problems which may impede issuance of warranties or guaranties.
   b. Maintain installed work until the Notice of Substantial Completion has been filed.

1.7 COORDINATION

A. Coordinate work with Owner's personnel.

B. Provide required notification to the Geotechnical Engineer so that a representative from the Owner's Geotechnical Engineering consultant can be present for all excavation, filling and grading operations to test and observe earthwork construction.

C. Verify that the location of existing utilities have been indicated at work site by utility authorities, by Owner, and as specified on the Plans.

1.8 EXISTING CONDITIONS

A. Existing Conditions:

1. Examine the site and verify conditions with the Drawings and Specifications. Contractor shall familiarize himself with existing site conditions and any changes that have occurred at the site since the preparation of the contract documents, and shall be responsible to account for any such changes in the price bid for this work.

2. Thoroughly investigate and verify conditions under which the Work is to be performed.
3. Locate and identify utilities:

   a. Call a Local Utility Locator Service (USA - "Underground Service Alert" – [800] 227-2600) for the task of locating any applicable off-site and on-site utilities in the area where the Project is located.

4. No allowance for Extra Work will be granted resulting from negligence or failure to meet requirements of this Section.

B. Where subsurface work involves more than the normal depth of excavation required for the removal and/or construction of surface improvements (surface improvements such as concrete flatwork, paving, landscaping, signs, etc.), the Engineer will have made a diligent attempt to indicate on the plans the location of all main and trunk line utility facilities which may affect the Work. In many cases, however, the only available information relative to the existing location of said facilities may have been small scale undimensioned plats. The locations of said facilities, therefore, shall be considered approximate only, until exposed by the Contractor.

C. Under similar circumstance, service laterals and appurtenances will have also been shown where information was available as to their location. In many cases, however, the only available information relative to the existing location of said facilities may have been small scale undimensioned plats. The locations of said facilities, therefore, shall be considered approximate only, until exposed by the Contractor.

D. Determine exact location of existing buried utilities by:

1. Marking on ground or pavement surface the alignment and extent of the facilities and the probable location of existing utilities using construction plans and existing surface features.
2. Requesting Underground Service Alert (USA) to indicate location of existing buried facilities (phone 1-800-227-2600). Provide USA a minimum of two (2) working days notice of request for locations, and notify Owner of said request concurrently.
3. Confirm exact location of existing utilities by hand methods of excavation, or by use of vacuum equipment.

E. At proposed work location, expose by hand methods (or vacuum equipment) all existing utilities along the route of the proposed work prior to using any mechanical equipment. If mechanical equipment is allowed at a particular location, it may only be used after the completion by the Contractor of a successful exhaustive search by hand (or vacuum equipment) methods to locate all existing facilities as indicated on the plans, and/or as indicated on the ground by USA or Owner's personnel.

F. Provide Field Engineering to record the location of all utilities encountered. Where locational conflicts exist between existing utilities and the planned location of facilities to be constructed under this Contract, submit detailed information to the Engineer for review and direction.

G. Maintain all existing utility mains and service lines in constant service during construction of the Work.

H. Where service disruptions are allowed, minimize the length of such disruptions by proper scheduling and diligent pursuit of the work, and coordinate the timing of any such disruptions in advance with the District.

1.9 ENVIRONMENTAL REQUIREMENTS

A. Dust control: Perform work in a manner as to minimize the spread of dust and flying particles. Thoroughly moisten all surfaces as required to prevent dust from being a nuisance to the public, neighbors and concurrent performance of other on-site work.

1. All disturbed areas, including storage piles, which are not being actively utilized for

construction purposes, shall be effectively stabilized of dust emissions using water, chemical stabilizer/suppressant, or vegetative ground cover.

2. All land clearing, demolition, grubbing, scraping, excavation, land leveling, grading, and cut and fill activities shall be effectively controlled of fugitive dust emissions utilizing application of water or by pre-soaking.
3. When materials are transported off-site, all material shall be covered, effectively wetted to limit visible dust emissions or at least six inches of freeboard space from the top of the container shall be maintained.
4. All operations shall limit or expeditiously remove the accumulation of mud or dirt from adjacent public streets at least once every 24 hours when operations are occurring. The use of dry rotary brushes is expressly prohibited except where preceded or accompanied by sufficient wetting to limit the visible dust emissions. The use of blower devices is expressly forbidden.
5. Following the addition of materials to, or the removal of materials from, the surface of outdoor storage piles, said piles shall be effectively stabilized of fugitive dust emissions utilizing sufficient water or chemical stabilizer/ suppressant.

    a. Contractor shall comply with all requirements of the San Joaquin Valley Air Pollution Control District (SJVAPCD) for construction activity related to this project.
    b. A Dust Control Plan, as required by the SJVAPCD, may be required for this project. If required, Contractor shall be responsible for preparing said Dust Control Plan, submitting to the SJVAPCD for review and approval, and paying all SJVAPCD review and permitting fees related to the Dust Control Plan.
    c. If a dust control plan is required, no construction activity related to this project may begin until Contractor has secured an approved Dust Control Plan.
    d. Contractor shall be solely responsible to implement all requirements of the Dust Control Plan throughout the life of this contract.
    e. Should fines or fees be levied against the Project for violations of the Dust Control Plan and/or related SJVAPCD regulations, Contractor shall be responsible to pay all said fines or fees and to implement all mitigation measures required by SJVAPCD in order to bring the construction activity into compliance with SJVAPCD regulations. The costs for any such fines or fees shall be included in the lump sum price bid for work under this contract and no additional payment will be made therefore

B. Burning: No burning will be allowed on-site.

C. Rain: Work under this section shall not be started or maintained under threat of rain, unless the work is not affected by the rain.

D. Do not place fill during weather conditions which will alter moisture content of fill materials sufficiently to make compaction to the specified densities difficult or impossible.

E. When reference is made to SWPPP (Storm Water Pollution Prevention Plan), if any within this Project Manual, then comply with all environmental protection requirements included therein.

F. In accordance with EPA, CARB and CF.

G. Protection:

1. Protect cut and fill areas to prevent water running into excavation. Maintain areas free of water. Remove seeping water immediately by pumps. Provide dewatering as necessary.
2. Protect cut slopes from erosion due to precipitation and other sources of runoff.
3. Protect utilities to remain within the construction area and special construction. If utility lines are uncovered (water, electric, sewer, etc.) not shown on the drawings during excavation of site, notify the Architect promptly for its review and action.
4. Do not permit access to undeveloped portions of the site, nor to areas that are outside of the limits of grading.

1.10 PROJECT RECORD DOCUMENTS

A. Submit under provisions of GENERAL CONDITIONS and DIVISION 1, GENERAL REQUIREMENTS.

B. Accurately record actual locations of utilities encountered including depth and horizontal location, as measured from permanent site features.

PART 2 - PRODUCTS

2.1 MATERIALS

A. Fill in Turf or Other Planting Areas: Type S2 or S3 per Division 31 Specification Section SOIL MATERIALS.

B. Fill in Non-planting Areas: Type S1, S2 or S4 per Division 31 Specification Section SOIL MATERIALS.

C. Imported material: Type S3, S4 or S5 per Division 31 Specification Section SOIL MATERIALS.

PART 3 - EXECUTION

3.1 EXAMINATION

A. Verify site conditions.

3.2 PREPARATION

A. Layout of Work:

1. Contractor shall be responsible for all lines and grades. Layout shall be provided by a California registered Land Surveyor or Civil Engineer, at Contractor's expense.
2. Check all bench marks, monuments and property lines and verify locations.
3. Locate and maintain all grade stakes.
4. Monuments moved or displaced during grading operation are to be replaced by a California Registered Civil Engineer or Surveyor, at Contractor’s expense.

B. Locate, identify, and protect existing above and below grade utilities from damage.

C. Protect plant life, lawns, trees, shrubs, and other features not authorized for removal.

D. Protect existing structures, fences, curbs, sidewalks, paving and other improvements to remain from damage from excavation equipment and vehicular traffic.

E. Employ equipment and methods appropriate to the work site.

F. Protect excavated areas from drainage inflow, and provide for drainage of all excavated areas.

G. Comply with all provisions of the Construction Safety Orders and General Safety Orders of the California Division of Industrial Safety, as well as all other applicable regulations as they pertain to the protection of workers from the hazard of caving ground in excavations.

3.3 SITE STRIPPING:

A. Reference is made to Division 31 Specification Section SITE CLEARING.

B. Within the areas of planned surface improvements and structures, the near surface soils containing vegetation, roots, organics, or other objectionable material must be stripped and removed from the site. Upon approval of the Geotechnical Engineer, suitable materials stripped from the site may stockpiled and incorporated into the finish fill for planting areas.

C. All areas to receive surface improvements shall be stripped to remove turf, shrubs, trees and other vegetation, along with associated root systems, concrete, wood, metal, rubbish and other unsuitable debris, and any loose, saturated or unconsolidated soil material. Minimum stripping depth is expected to be 3-inches below existing site grades. Stripping shall continue to the depth required to expose acceptable basement soils that are free from deleterious which are not suitable for Engineered Fill, as required by the Geotechnical Engineer.

D. In areas were the existing AC pavement section is removed, AC grading with a maximum particle size of 3 inches and at least 30 percent passing the #4 sieve can be used as fill material outside of new building areas. Aggregate base can be reclaimed and used as fill material; however it must be segregated from the underlining soil and should not be mixed with AC grinding if placed as fill within the building area.

E. Use of asphalt pavement grindings is not allowed within the root zone of plant areas.

3.4 EXCAVATION

A. Following clearing and stripping operations, excavate planned construction areas as specified in this Section.

B. Within the area of the planned building improvements plus at least 5 feet horizontally beyond the perimeter of these improvements, the subgrade must be over-excavated at least 12 inches below the stripped subgrade surface or at least to the bottom of footings, whichever is lower.

C. Provide additional excavation as required to conform to the lines, grades and cross-sections

shown on the plans.

D. When excavating through tree roots, perform work by hand and cut roots, where authorized, with a saw. Remove all roots ¼" in diameter and greater.

E. Remove excess soil not to be used as fill in the Work from the site. Unless requested by Owner to be deposited at a site designated by Owner on the property, obtain a disposal site and legally dispose of said excess material, all at no additional cost to the Owner.

F. Areas disturbed by demolition must be excavated to expose undisturbed soils.

G. Excavated soils free of deleterious substances (organic matter, demolition debris, tree roots, etc.) and with less than 2% organic content by weight, may be returned to the excavations as Engineered Fill.

3.5 FILLING AND COMPACTING

A. Once clearing, stripping and over-excavation operations are complete, scarify the surface to receive fill material or improvements to a depth of 8-inches, moisture condition to at least optimum moisture content, and compact to a minimum of 90% of maximum dry density based on ASTM Test Method 1557.

B. Place and compact soil to finish subgrade of improvements to be placed thereon, or to finished surface grade where no improvements are to be placed thereon.

C. All fill required shall be placed as Engineered Fill.

D. Imported fill shall be approved by the Geotechnical Engineer prior to placement

E. On-site soils are suitable for re-use as Engineered Fill, providing they are cleansed of excessive organics (less than 2 percent by weight, ASTM D2974), debris, and fragments larger than three (3) inches in maximum dimension and meet the requirements of soil Type S4, Division 31 Specification Section SOIL MATERIALS.

F. Engineered Fill shall be moisture conditioned to at least optimum moisture, placed in uncompacted layers not exceeding eight (8) inches in thickness, and compacted as specified, based on ASTM Test Method D1557.
   1. Non-vegetative surface improvement areas (structures and site concrete improvements) - To a minimum of 90% of maximum dry density in top 12 inches.
   2. Vegetative surface improvement areas (turf and planters) - Below top twelve (12) inches - to a minimum of 90% of maximum dry density. Top twelve (12) inches - 85% of maximum dry density.
   3. Pavement areas: to a minimum 95% of maximum dry density in top twelve (12) inches.

G. Maintain optimum moisture content of fill materials to attain required compaction density.

H. Additional lifts shall not be placed if the previous lift did not meet the required dry density, or if soil conditions are not stable.

I. Conform fill to the lines, grades and cross-sections shown on the plans.

J. Fill materials to conform to Division 31 Specification Section SOIL MATERIALS.

K. Provide, at no additional cost to Owner, imported soil material conforming to the requirements of Division 31 Specification Section SOIL MATERIALS, as needed to attain finished grades of Work.

L. Utilize equipment which will not disturb or damage existing utilities and other improvements.

3.6 PREPARATION OF SUBGRADE FOR SURFACE IMPROVEMENTS

A. Where concrete, asphalt-concrete, aggregate base, or other non-vegetative surface improvements, or a layer of said surface improvements, are to be constructed on the soil surface, prepare the subgrade for said improvements in accordance with this section.

B. Scarify the soil as specified and remove and dispose of (off the project site) all rocks, hardpan chunks or otherwise unsuitable material over 3 inches in size.

C. Thoroughly moisture condition and compact as described above.

D. Prior to commencing construction of surface improvements, pass a test roller of size and weight as approved by the Owner over the subgrade to establish the extent of soft or spongy areas requiring repairs.

E. Conform finished subgrade surface to the lines, grades and cross-sections shown on the plans.

3.7 FINE GRADING

A. Fine grade all finished surfaces to the lines, grades and cross-sections shown on the plans, and to blend to hard surface improvements.

B. Rake and smooth all finished surfaces not to receive hard surface improvements.

C. Use suitable stockpiled or imported topsoil for the top 12-inches of areas to receive landscape improvements.

D. Import topsoil meeting the requirements of Division 31 Specification Section SOIL MATERIALS, as required to complete finish grading.

E. Topsoil may not be used in areas requiring Engineered Fill.

3.8 TOLERANCES

A. Top surface of Subgrade for Non-Vegetative Surface Improvements or Layers thereof: Plus or minus 0.02 foot from planned elevation.

B. Top surface of Subgrade for Vegetative Surface Improvements or for Bare Ground - Plus or minus 0.05 foot of planned elevation, or as required for finish surface to match adjacent improvements or ground.

3.9 FIELD QUALITY CONTROL

A. Field inspection and testing will be performed under provisions of GENERAL CONDITIONS and/or DIVISION 1, GENERAL REQUIREMENTS.

B. Compaction testing will be performed in accordance with ANSI/ASTM D1557.

C. If tests indicate work does not meet specified requirements, recompact, or remove and replace, and retest.

D. All retesting required as a result of failure of initial test will be performed by Owner's testing agency, at the expense of the Contractor.

3.10 PROTECTION

A. Protect graded areas from traffic, freezing, erosion, and all other sources of damage. Keep free of debris and trash.

B. Repair and re-establish grades to specified tolerances where completed or partially completed work becomes eroded, rutted, settled, or where it is damaged by subsequent construction operations or weather.

C. Where settlement occurs prior to acceptance of the work, remove and replace surface improvements, excavate, replace, and re-compact in accordance with these specifications, and restore the surface improvements.

3.11 CLEANING

A. Remove all surplus or unsatisfactory soil material, trash, and debris, and legally dispose of off of the Owner's property.

END OF SECTION

SECTION 31 22 22 - SOIL MATERIALS

PART 1 - GENERAL

1.1 RELATED DOCUMENTS

A. Drawings and general provisions of the Contract, including General and Supplementary Conditions and Division 01 Specification Sections, apply to this Section.

1.2 SUMMARY:

A. SECTION INCLUDES
   1. Excavated (and re-used) materials and imported materials.

1.3 RELATED SECTIONS:
   1. Section 31 20 00 - Earthwork: Excavation, Filling and Grading.
   2. Section 31 23 33 - Trench Excavation and Backfill.

1.4 SUBMITTALS

A. Samples: Submit, in air-tight containers, 10 lb. sample of Type S3, S4 and S5 fill to inspector.

B. Soil Analysis: Submit for Type S3, S4 and S5 soils to be imported.

C. Materials Source: Submit location of imported materials source. Provide materials from same source throughout the work. Change of source requires approval.

D. For imported soil, obtain Geotechnical Engineer and DTSC approval prior to importing.

PART 2 - PRODUCTS

2.1 SOIL MATERIALS

A. Soil Type S1: Excavated and re-used material, graded; free of lumps larger than 3 inches, rocks larger than 2 inches, and debris.

B. Soil Type S2: Excavated and reused material, graded; free of roots, lumps greater than one inch, rocks larger than 1/2 inch, debris, weeds and foreign matter.

C. Soil Type S3: Imported topsoil, friable loam; reasonably free of roots, rocks larger than ½ inch, debris, weeds, and foreign matter.

D. Soil Type S4: Imported borrow, suitable for purposes intended, meeting the following characteristics:

1. Maximum Particle Size: 3”
2. Maximum Organic Content: <2% by weight
3. Plasticity Index: <12
4. Percent Passing ¾” Sieve: 90%-100%
5. Percent Passing #4 Sieve: 60%-100%
6. Percent Passing #200 Sieve: 20%-50%
7. Expansion Index: <20
8. R-Value (in paved areas): >50

a. Soluble Sulfates: <1,000 mg/Kg
b. Soluble Chlorides: <200 mg/Kg
c. Soil Resistivity: >1,000 ohm-cm

9. PH range 6.0-8.5

E. Soil Type S5: Imported sand. Natural river or bank sand (sand equivalent greater than 30), washed; free of silt, clay, loam, friable or soluble materials, and organic matter, with less than 8% by weigh passing the #200 sieve.

2.2 SOURCE QUALITY CONTROL

A. Inspection of imported soil will be performed by the Geotechnical Engineer, at source of import and prior to being delivered to the site.

PART 3 - EXECUTION

3.1 STOCKPILING

A. Stockpile excavated or imported material onsite at location designated by project inspector.

B. Stockpile excavated or imported material in sufficient quantities to meet project schedule and requirements.

3.2 STOCKPILE CLEANUP

A. Remove stockpile, leave area in a clean and neat condition. Grade site surface to prevent free standing surface water.

B. Dispose of excess material off-site.

END OF SECTION

SECTION 31 23 33 - TRENCH EXCAVATION AND BACKFILL

PART 1 - GENERAL

1.1 RELATED DOCUMENTS

A. Drawings and general provisions of the Contract, including General and Supplementary Conditions and Division 01 Specification Sections, apply to this Section.

1.2 SUMMARY:

A. SECTION INCLUDES
1. Excavating trenches, holes and pits for constructing the Work.
2. Backfill and compaction.
3. Providing suitable bedding and backfill material, as specified herein.

B. RELATED SECTIONS
1. Contract General Conditions and Division 1, General Requirements.
2. Section 31 11 00 - Site Clearing
3. Section 31 20 00 - Earthwork: Excavation, Filling and Grading
4. Section 31 22 22 - Soil Materials
5. Section 33 12 00 - Water Utilities
6. Section 33 40 00 - Storm Drainage

1.3 REFERENCES

A. ANSI/ASTM D1557 - Test Methods for Moisture-Density Relations of Soils and Soil-Aggregate Mixtures Using 10 lb (4.54 Kg) Rammer and 18 inch (457 mm) Drop.

B. Geotechnical Report prepared by RMA GeoScience, Inc., project number 17G-2397-0, dated by November 9, 2018; for reference only, and at the cost of reproduction.

1.4 DEFINITIONS

A. Utility: Any buried or above ground pipe, conduit, cable, associate devices or appurtenances, or substructure pertaining hereto.

1.5 QUALITY ASSURANCE

A. Qualifications

1. Installer:

   a. Engage an experienced Installer who has successfully completed three (3) projects of similar scope and size to that indicated for this project within the past 5 years.

B. Regulatory Requirements:

1. In accordance with Specification Section REGULATORY REQUIREMENTS and the following:

a.	CARB	Materials and equipment used for this Project shall comply with the current applicable regulations of the California Air Resources Board [CARB] and the Environmental Protection Agency [EPA].
b.	CF	City of Fresno, Codes and Ordinances
c.	EPA	Environmental Protection Agency.
d.	CAL/OSHA	Comply with all provisions of the Construction Safety Orders and the General Safety Orders of the California Division of Occupational Safety and Health, as well as all other applicable regulations as they pertain to the protection of workers from the hazard of caving ground excavations.

C. Certificates:

1. Installer's certification that all trench backfill installation meets or exceeds the requirements of this specification.
2. Contractor's certification (on Contractor's letterhead paper) that the trench backfill materials and installation meets or exceeds the requirements of this specification.

D. Meetings:

1. Pre-Installation: Schedule prior to the start of work.

   a. Coordinate the work with other work being performed.
   b. Identify any potential problems, which may impede planned progress and proper installation of work regarding quality of installation and warranty requirements.

2. Progress: Scheduled by the Contractor during the performance of the work.

   a. Review for proper installation of work progress.
   b. Identify any installation problems and acceptable corrective measures.
   c. Identify any measures to maintain or regain project schedule if necessary.

3. Completion: Scheduled by the Contractor upon proper completion of the work.

   a. Inspect and identify any problems which may impede issuance of warranties or

guaranties.

4. Maintain installed work until the Notice of Substantial Completion has been filed.

1.6 COORDINATION

A. Coordinate work with Owner's personnel.

B. Verify that the location of existing utilities have been indicated at work site by utility authorities.

1.7 EXISTING UTILITIES

A. Where subsurface work involves more than the normal depth of excavation required for the removal and/or construction of surface improvements (surface improvements such as concrete work, paving, landscaping, signs, etc.), the Engineer will have made a diligent attempt to indicate on the plans the location of all main and trunkline utility facilities which may affect the Work. In many cases, however, the only available information relative to the existing location of said facilities may have been small scale undimensioned plats. The locations of said facilities, therefore, shall be considered approximate only, until exposed by the Contractor.

B. Under circumstance similar to 31 23 33/1.7A, service laterals and appurtenances will have also been shown where information was available as to their location. In many cases, however, the only available information relative to the existing location of said facilities may have been small scale undimensioned plats. The locations of said facilities, therefore, shall be considered approximate only, until exposed by the Contractor.

C. Determine exact location of existing buried utilities by:

1. Marking on ground or pavement surface the alignment and extent of the proposed facilities and the probable location of existing utilities using construction plans and existing surface features.
2. Requesting Underground Service Alert (USA) to indicate location of existing buried facilities (phone 1-800-227-2600). Provide USA a minimum of two (2) working days notice of request for locations, and notify Owner of said request concurrently.
3. Locate exact location of existing utilities by hand methods of excavation, or by use of vacuum equipment.

D. At proposed work location, expose by hand methods (or vacuum equipment) all existing utilities along the route of the proposed work prior to using any mechanical equipment. If mechanical equipment is allowed at a particular location, it may only be used after the completion by the Contractor of a successful exhaustive search by hand (or vacuum equipment) methods to locate all existing facilities as indicated on the plans, and/or as indicated on the ground by USA or Owner's personnel.

E. Provide Field Engineering per Contract General Conditions and Division 1 to record the location of all utilities encountered. Where locational conflicts exist between existing utilities and the planned location of facilities to be constructed under the Contract, submit detailed information to the Owner's Inspector and Engineer for review and direction.

F. Maintain all existing utility mains and service lines in constant service during construction of the Work.

G. Where service disruptions are allowed, minimize the length of such disruptions by proper scheduling and diligent pursuit of the work.

PART 2 - PRODUCTS

2.1 FILL MATERIALS

A. Fill Type S1, S2, S4 and S5, as specified in Division 31 Specification Section SOIL MATERIALS.

2.2 WARNING TAPE

A. 6” wide warning tape shall be installed over all of the pipelines as shown on the details.

PART 3 - EXECUTION

3.1 PREPARATION

A. Protect plant life, lawns, trees, shrubs, and other features not authorized for removal.

B. Protect existing structures, fences, sidewalks, curbs, and other improvements from excavation equipment and vehicular traffic.

C. Maintain and protect above and below grade utilities which are to remain.

D. Comply with all provisions of the Construction Safety Orders and General Safety Orders of the California Division of Industrial Safety, as well as all other applicable regulations as they pertain to the protection of workers from the hazard of caving ground in excavations.

3.2 EXCAVATION

A. Excavate soil required to locate existing utilities and install the work.

B. Use hand methods of excavation to locate existing utilities, and to excavate trenches, pits and holes in congested areas.

C. Employ equipment and methods appropriate to the work site. Small mechanical excavators may be used only in areas where there is sufficient space so as not to damage adjacent improvements, and where the locations of all existing utilities have been determined by hand methods of excavating.

D. Cut trenches just wide enough to enable installation and proper bedding and backfill, and to allow inspection.

E. Do not interfere with 45 degree bearing splay of foundations.

F. Hand trim excavation. Hand trim for bell and spigot pipe joints. Remove loose material.

G. Excavate trenches, pits or holes bottoming in hardpan to a minimum of 6 inches below the grade for the bottom of the pipe and any couplings, and then backfill to the pipe grade with Type S2, S4 or S5 material, thoroughly compacted. No additional payment will be made for such over-excavation and refill.

H. In all trenches or excavation sites where a firm foundation is not encountered, such as soft, spongy, or otherwise unsuitable material, remove the material to a minimum of 12 inches, or to a depth determined by the Engineer, below the bottom of the proposed pipe or structure, and backfill the space with Type S2, S4 or S5 material containing sufficient moisture to allow compaction to 90% relative compaction. No additional payment will be made for such additional excavation or backfill.

I. Excavate trenches to provide the design grade of the facility, or as directed by the Engineer.

J. Stockpile excavated material to be returned to trench adjacent thereto in location which will not be detrimental to existing improvements, or pedestrian or vehicular traffic. Remove from site all unsuitable or excess material not to be used.

K. When excavating through tree roots, perform work by hand and cut roots, where authorized, with a saw.

L. Remove excess soil not used as backfill from the work site. Obtain a disposal site off of the Owner's property and legally dispose of said excess material, all at no additional cost to the Owner.

M. If water is encountered during excavations, provide all dewatering measures necessary to construct improvements shown.

N. Contractor shall make all provisions necessary, including but not limited to, shoring or sloping back trench walls as required to address sandy soils. The cost of these provisions shall be included in the lump sum amount bid for this work and no separate payment will be made therefore.

3.3 PROTECTION OF EXCAVATIONS

A. Provide all shoring and bracing as required and those codified in local, state and federal safety regulations.

B. Prevent water, caving or sloughing ground from entering excavations.

C. Maintain excavations free of water.

3.4 BACKFILLING

A. Provide type S5 pipe bedding as required by Plans and compact to 90% of the maximum dry

density.

B. After installation of pipes and appurtenances and placement of pipe bedding material, backfill trenches and excavations to finished grade, or subgrade in areas to receive surface improvements

C. Backfill trenches above pipe bedding material and to within 24 inches of finish subgrade with Type S1, S2, S4 or S5 soils, except that that top 12 inches shall be type S2, S3, S4 or S5 soils.

D. Employ a placement method that does not disturb or damage existing or proposed pipes or other Utilities or Improvements.

E. Place and compact all soil backfill in continuous layers not exceeding 8 inches in uncompacted thickness.

F. Maintain optimum moisture content of fill materials to attain required compaction density.

G. Backfill final 12-inch thickness to finish subgrade in areas to receive concrete, asphalt-concrete, aggregate base, or other non-vegetative surface improvement, with Type S2, S4 or S5 soils.

H. Backfill final 12-inch thickness to finish subgrade in areas to receive sod, other vegetation, or bare soil, with Type S2 or S3 soils.

I. Compact backfill below the top 12-inches to 90% relative compaction.

J. In areas to receive buildings, structures, or concrete flatwork, compact the top 12-inches to 90% relative compaction.

K. In areas to receive asphalt concrete pavements, compact the top 12-inches to 95% relative compaction.

L. In planting areas, compact the top 12-inches to 85% relative compaction.

3.5 TOLERANCES

A. Top Surface of Backfill under Paved or Concrete Areas: Plus or minus 0.02 feet from required elevations.

B. Top Surface of General Backfilling: As required for finish surface to match adjacent improvements or ground.

3.6 FIELD QUALITY CONTROL

A. Field inspection and testing will be performed under provisions of General Conditions and/or Division 1.

B. Compaction testing will be performed in accordance with ANSI/ASTM D1557.

C. If tests indicate work does not meet specified requirements, recompact, and retest. Retests required due to failure of initial tests shall be paid for by the Contractor.

3.7 PROGRESS AND PROSECUTION

A. Backfill any excavation opened in any day on that same day.

END OF SECTION

SECTION 313100– SOIL TREATMENT

PART 1 - GENERAL

1.1 SUMMARY

A. This Section includes the following:
   1. Provide all material, labor, equipment and services necessary to provide Termite Control and Herbicide, and other related items necessary to complete the Project as indicated by the Contract Documents unless specifically excluded.

B. Related Sections: The following Project Manual Sections contain requirements that relate to this section:
   1. ALL DIVISION 00 SPECIFICATION SECTIONS.
   2. ALL DIVISION 01 SPECIFICATION SECTIONS.
   3. 03 30 00 CAST-IN-PLACE CONCRETE
   4. ALL SPECIFICATION SECTIONS IN THE FACILITY SERVICES SUBGROUP.
   5. ALL SPECIFICATION SECTIONS IN THE SITE AND INFRASTRUCTURE SUBGROUP.

1.2 SUBMITTALS

A. Submit in accordance with Specification Section - SUBMITTAL PROCEDURES:
   1. Product Data for each type of product specified:
      a. Include the EPA Registered Label showing the Active Ingredients and their percentages.
   2. Quality Assurance/Control Submittals:
      a. Certificates:
         1) Indicating compliance with applicable regulations for all products, signed by product manufacturer.
         2) Installers Qualification for products specified.
      b. Manufacturer's written Instructions for each type of product specified:
      c. Test reports:
         1) Soil Treatment application.
   3. Closeout Submittals:
      a. Project Record Documents in accordance with Specification Section - PROJECT DOCUMENTS.
         1) Identify and accurately locate extent of treatment on the Site Plans.
      b. Warranty in accordance with Specification Section - WARRANTIES.
         1) Special Warranty specified within this specification section.

1.3 QUALITY ASSURANCE

A. Qualifications:
   1. Material Qualifications:
      a. All products shall comply with all applicable EPA regulations and standards in the place where the Project is located, and in effect at the time of application.

b. Obtain termite control products from a single manufacturer for each product.

2. Installer Qualifications:
   a. A specialist who is EPA approved and licensed according to regulations of authorities having jurisdiction to apply termiticide and herbicides in the jurisdiction where the project is located.

B. Regulatory Requirements:
1. In accordance with Specification Section - REGULATORY REQUIREMENTS and the following:
   a. CARB Materials and equipment used for this Project shall comply with the current applicable regulations of the California Air Resources Board (CARB) and the Environmental Protection Agency (EPA), in the area where the project is located
   b. EPA Environmental Protection Agency – All Applicable Environmental Protection Regulations and Standards.
   c. USDA United States Department of Agriculture.
   d. All products will comply with the current EPA laws and California Rules and Regulations at the time of application. Should the products listed become unavailable because of changes in the law, submit substitute products in accordance with Section - SUBSTITUTION PROCEDURES for review by the Architect.

C. Meetings:
1. Pre-Installation: Scheduled by the Contractor prior to the start of work.
   a. Coordinate the work with other work being performed.
   b. Identify any potential problems, which may impede planned progress and proper installation of work regarding quality of installation and warranty requirements.
2. Progress: Scheduled by the Contractor during the performance of the work.
   a. Review for proper installation of work progress.
   b. Identify any installation problems and acceptable corrective measures.
   c. Identify any measures to maintain or regain project schedule if necessary.
3. Completion: Scheduled by the Contractor upon proper completion of the work.
   a. Inspect and identify any problems that may impede issuance of warranties or guaranties.
   b. Maintain installed work until the Notice of Substantial Completion has been executed.

1.4 PROJECT CONDITIONS

A. Environmental requirements:
1. To ensure penetration, do not treat soil that is water saturated or frozen. Do not treat soil while precipitation is occurring. Comply with requirements of the EPA-Registered Label and requirements of authorities having jurisdiction.

B. Existing Conditions:
1. Examine site and compare it with the drawings and specifications. Thoroughly investigate and verify conditions under which the work is to be performed. No allowance will be made for extra work resulting from negligence or failure to be acquainted with all available information concerning conditions necessary to estimate the difficulty or cost of the work.

2. Conduct work so as not to interfere unnecessarily with adjacent roads, streets, drives and walks.

1.5 SEQUENCING AND SCHEDULING

A. Coordination:
1. Coordinate soil treatment application with excavating, filling, grading, and concrete operations. Treat soil under footings, grade beams, and ground-supported slabs before construction.

1.6 WARRANTY

A. Contractor's General Warranty:
1. In accordance with Specification Section - WARRANTIES.

B. Manufacturer’s Warranty:
1. Manufacturer's standard form, signed by Applicator and Contractor certifying that termite control work, consisting of applied soil termiticide treatment, will prevent infestation of subterranean termites. If subterranean termite activity or damage is discovered during warranty period, re-treat soil and repair or replace damage caused by termite infestation.
2. In accordance with manufacturer's written standard warranty:
a. Warranty Period Five (5) Years.
1) From the date of Substantial Completion.

C. Installer's Warranty:
1. In accordance with the terms of the Specification Section - WARRANTIES:
a. Warranty period One (1) Year.

PART 2 - PRODUCTS

2.1 MANUFACTURERS

A. Products specified are from companies listed below, or approved equivalent. These products listed herein establish the size, pattern, color range and function selected by the Architect for this Project. Manufacturers listed as acceptable alternative manufacturers must still comply with the requirements of the products listed in order to be approved as an equivalent during the Submittal Process. If the acceptable alternative manufacturers listed are not approved during the Submittal Process due to non-compliance with the written documents, then the Contractor shall submit product specified.
1. Specified termiticide product manufacturer:
a. BAYER CORPORATION "PREMISE 75".
b. BASF CORPORATION "TERMIDOR SC".
c. AMVAC "WISDOM TC FLOWABLE".

B. Products from other manufacturers not listed must submit in accordance with Specification Section - SUBSTITUTION PROCEDURES.

2.2 MATERIALS

A. Termiticide:
1. PREMISE® 75 insecticide in water soluble packets as manufactured by BAYER CORPORATION, delivered in a minimum of a 0.1 percent solution as indicated by the label and in accordance with local environmental regulations, or approved equivalent.
   a. Active Ingredients:
      1) Imidacloprid, 1-((6-Chloro-3-pyridinyl)methyl)-*N*-nitro-2-imidazolidinimine 75.0 percent.
      2) Inert Ingredients: 25.0 percent.
      3) Total: 100.0 percent.
2. TERMIDOR SC Termidicide/Insecticide to use at 0.06 percent - 0.125 percent finished solution. The 0.06 percent should be used in typical control situations.
   a. Active Ingredients:
      1) Fipronil: 5 amino-1-(2,6 dichloro-4-(trifluoromenthyl)(phenyl)-4-((1,R,S)-(trifluoromethyl) sulfinyl)-1-H-pyrazole-3-carbonitrile 9.1 percent.
      2) Inert ingredients 90.9 percent.
3. WISDOM TC Flowable use a 0.06 percent emulsion for subterranean Termites.
   a. Active Ingredients:
      1) Bifenthrin 7.9 percent.
      2) Other ingredients 92.1 percent.

B. Herbicide:
1. Commercial chemical for weed control registered by the EPA and the State of California. Provide granular, liquid, or wettable powder form.

PART 3 - EXECUTION

3.1 EXAMINATION

A. Termiticide:
1. Examine substrates, areas, and conditions, with Applicator present, for compliance with requirements for moisture content of soil, interfaces with earthwork, slab and foundation work, landscaping, and other conditions affecting performance of termite control.
   a. Proceed with application only after unsatisfactory conditions have been corrected.

3.2 PREPARATION

A. General: Comply with the most stringent requirements of authorities having jurisdiction and with manufacturer's written instructions for preparation before beginning application of termite control treatment. Remove all extraneous sources of wood cellulose and other edible materials such as wood debris, tree stumps and roots, stakes, formwork, and construction waste wood from soil within and around foundations.

B. Soil Treatment Preparation: Remove foreign matter and impermeable soil materials that could decrease treatment effectiveness on areas to be treated. Loosen, rake, and level soil to be treated except previously compacted areas under slabs and footings[. Termiticide may be applied before placing compacted fill under slabs if recommended in writing by termiticide manufacturer].
   1. Fit filling hose connected to water source at the site with a backflow preventer, complying with requirements of authorities having jurisdiction.

3.3 APPLICATION

A. General:
   1. General: Comply with the most stringent requirements of authorities having jurisdiction and with manufacturer's EPA-Registered Label for products.

B. Applying Termiticide for Pre-Construction Treatment:
   1. Application: Mix soil treatment termiticide solution to a uniform consistency. Provide quantity required for application at the label volume and rate for the maximum specified concentration of termiticide per the soil conditions present, according to manufacturer's EPA-Registered Label, to the following so that a continuous horizontal and vertical termiticide barrier or treated zone is established around and under building construction. Distribute treatment evenly.
      a. Slabs-on-Grade and Basement Slabs: Under ground-supported slab construction, including footings, building slabs, and attached slabs as an overall treatment. Treat soil materials before concrete footings and slabs are placed.
         1) If the slab-on-grade construction is applied directly over the vapor retarder/barrier, then apply the termiticide just under the vapor retarder/barrier just prior to it's placement. Spray all penetrations on top of the vapor retarder/barrier after it is placed and sealed, and just prior to the placement of the concrete.
         2) If the slab-on-grade construction is applied over a sand layer laid on top of the vapor retarder/barrier, then apply the termiticide directly over the sand layer just prior to the placement of the concrete.
      b. Foundations: Adjacent soil including soil along the entire inside perimeter of foundation walls, along both sides of interior partition walls, around plumbing pipes and electric conduit penetrating the slab, and around interior column footers, piers, and chimney bases; also along the entire outside perimeter, from grade to bottom of footing. Avoid soil washout around footings.
      c. Crawlspaces: Soil under and adjacent to foundations as previously indicated. Treat adjacent areas including around entrance platform, porches, and equipment bases. Apply overall treatment only where attached concrete platform and porches are on fill or ground.
      d. Masonry: Treat voids.
      e. Penetrations: At expansion joints, control joints, and areas where slabs will be penetrated.
   2. Avoid disturbance of treated soil after application. Keep off treated areas until completely dry.
   3. Protect termiticide solution, dispersed in treated soils and fills, from being diluted until ground-supported slabs are installed. Use waterproof barrier according to EPA-Registered Label instructions.
   4. Post warning signs in areas of application.

5. Reapply soil treatment solution to areas disturbed by subsequent excavation, grading, landscaping, or other construction activities following application.

C. Applying Termiticide for Post-Construction Treatment:
1. New construction shall always require Pre-Construction Treatment.
2. Only if the project involves Modernization and Temiticide Treatment is required, follow product label instructions for Post-Construction Treatment.

D. Applying Herbicide Treatment:
1. Extent of Herbicide Application: Soil under all asphaltic concrete paving, including driveways, parking areas, and athletic courts.
2. Application:
   a. Prepare substrate in accordance with manufacturer's written recommendations.
   b. Apply Herbicide Solution over sub-base prior to application of asphaltic concrete.
   c. Apply in form allowed by the EPA label.
   d. Rate of Application: As recommended by the label.
   e. Take all precautions to limit herbicide treatment to areas immediately under paved areas.

3.4 FIELD QUALITY CONTROL

A. Soil Treatment Application Report: After application of soil treatment is completed, submit report for Owner's record information, including the following:
1. Date and time of application.
2. Moisture content of soil before application.
3. Brand name and manufacturer of termiticide.
4. Quantity of undiluted termiticide used.
5. Dilutions, methods, volumes, and rates of application used.
6. Areas of application.
7. Water source for application.

END OF SECTION

SECTION 32 11 26 - AGGREGATE BASE COURSE

PART 1 - GENERAL

1.1 RELATED DOCUMENTS

A. Drawings and general provisions of the Contract, including General and Supplementary Conditions and Division 01 Specification Sections, apply to this Section.

1.2 SUMMARY:

A. This Section includes the following:

1. Provide all material, labor, equipment and services necessary to install aggregate base surfacing as indicated by the Contract Documents.

1.3 RELATED SECTIONS

A. All Division 00 Specification Sections

B. All Division 01 Specification Sections

C. Section 31 20 00 – Earthwork: Excavation, Filling, and Grading.

D. Section 31 23 33 – Trench Excavation and Backfill.

E. Section 32 12 16 – Soil Sterilization.

F. Section 32 12 17 – Asphalt Paving.

1.4 REFERENCES

A. All Division 00 Specification Sections

B. All Division 01 Specification Sections

C. Section 31 11 00 - Site Clearing

D. Section 31 20 00 – Earthwork: Excavation, Filling and Grading

E. Section 31 22 22 – Soils Materials

F. Section 31 23 33 - Trench Excavation and Backfill

G. SSCDOT - Standard Specifications, Department of Transportation, State of California (Caltrans), latest edition, except for references to method of payment, and references to any state furnished materials.

1.5 QUALITY ASSURANCE

A. Provide and install in accordance with SSCDOT.

1.6 SUBMITTALS

A. Submit data sheets from supplier to document compliance with SSCDOT requirements.

B. Certificates of compliance for material.

C. Load tags for delivered material.

1.7 COORDINIATION

A. Coordinate with other work, including subgrade preparation and soil sterilization.

B. Coordinate installation schedule with Owner's use of the premises and with other contractors working at the site.

PART 2 - PRODUCTS

1.1 MATERIALS

A. Aggregate Base: Unless specified otherwise on Plans, Class 2, 3/4 Inch Maximum per Section 26 of SSCDOT.

PART 3 - EXECUTION

1.1 EXAMINATION

A. Verify quantities required.

B. Verify that subgrade has been placed and compacted per Contract Documents

C. Verify gradients and elevations of subgrade are correct.

1.2 INSTALLATION OF AGGREGATE BASE COURSE

A. Install in conformance with SSCDOT Section 26, Aggregate Bases.

B. Thickness - As shown on construction drawings.

C. Spreading and Compacting - In accordance with Section 26, SSCDOT. The relative compaction of each layer of compacted base material shall be not less than 95 percent.

D. The completed surface shall be thoroughly compacted, free from ruts, depressions, and irregularities, true to grade and cross-section.

E. Lines and grades for the installation of aggregate base shall be set by a California licensed Land Surveyor or Civil Engineer, at Contractor's expense.

1.3 TOLERANCES

A. Compacted thickness of aggregate base: Not less than the thickness specified on the Plans.

B. Finished Surface: Within 0.02 foot of planned grade per Section 26, SSCDOT. No more than 50% of the finish surface shall be above or below the specified grade for aggregate base.

1.4 FIELD QUALITY CONTROL

A. Field inspection and testing will be performed by the Owner's inspector, under provisions of Division 01.

1.5 PROTECTION

A. Immediately after placement and compaction, protect surface from mechanical injury.

B. Protect completed surface until surfacing layers are in place.

END OF SECTION

THIS PAGE IS LEFT INTENTIONALLY BLANK

SECTION 32 12 16 - SOIL STERILIZATION

PART 1 - GENERAL

1.1 RELATED DOCUMENTS

A. Drawings and general provisions of the Contract, including General and Supplementary Conditions and Division-1 Specification sections, apply to the work specified in this section.

1.2 SECTION INCLUDES

A. Furnishing and installing soil sterilant under all new crushed stone surfacing (decomposed granite and rock dust).

1.3 RELATED SECTIONS

A. Section 31 20 00 - Earthwork: Excavation, Filling, and Grading

B. Section 31 23 33 - Trench Excavation and Backfill

C. Section 32 11 26 – Aggregate Base Course

D. Section 32 12 17 – Asphalt Paving

E. Drawings and general provisions of Contract, including General and Supplementary Conditions and Division-1 Specifications sections, apply to the work of this section.

1.4 STANDARDS

A. In accordance with the following:

CCR-T21	California Code of Regulations, Title 21 Public Works.
CBC	California Building Code, California Code of Regulations, Title 24, Part 2, CCR-T24.
USDA	United States Department of Agriculture.
EPA	Environmental Protection Agency.
CF	City of Fresno

All applicable Environmental Regulations and Standards.

1.5 QUALITY ASSURANCE

A. Provide licensed operator to apply soil sterilant.

B. All products shall comply with the current EPA laws at time of application. Should the products listed become unavailable because of changes in the law, submit substitute products for review by the Owner.

1.6 SUBMITTALS

A. Submit in accordance with Specification Section SUBMITTAL PROCEDURES.

B. Certificates of application.

C. Certificates of compliance for material.

1.7 COORDINATION

A. Coordinate with other work, including subgrade preparation.

PART 2 - PRODUCTS

2.1 MATERIALS

A. Soil Sterilant: Treflan, weed and grass preventer, or approved equal.

PART 3 - EXECUTION

3.1 EXAMINATION

A. Verify that site is ready for application.

3.2 PREPARATION

A. Identify installation locations.

B. Employ equipment and methods appropriate to the work site.

C. Provide vehicular and traffic controls per Specification Section TEMPORARY FACILITIES AND CONTROLS.

3.3 APPLICATION

A. Thoroughly water soak surface to be treated. Avoid excessive water runoff.

B. Apply sterilant solution over surface to receive pavement or surfacing prior to the start of pavement or surfacing installation.

C. Apply in spray form, at rate as allowable by State of California.

D. Take all precautions to limit soil sterilant solution to areas immediately under proposed pavement or surfacing. Use shields as necessary, and do not apply under windy conditions.

3.4 FIELD QUALITY CONTROL

A. Field inspection will be performed under Specification Section QUALITY REQUIREMENTS.

END OF SECTION

SECTION 32 12 17 - ASPHALT PAVING

PART 1 - GENERAL

1.1 RELATED DOCUMENTS

A. Drawings and general provisions of the Contract, including General and Supplementary Conditions and Division 01 Specification Sections, apply to this Section.

1.2 SUMMARY

A. This Section includes the following:

1. Provide all material, labor, equipment and services necessary to completely install all pavement materials, accessories and other related items as required by the Contract Documents.

1.3 RELATED SECTIONS:

A. All Division 00 Specification Sections

B. All Division 01 Specification Sections

C. Section 31 22 00 - Earthwork: Excavation, Filling, and Grading

D. Section 31 23 33 - Trench Excavation and Backfill

E. Section 32 11 26 - Aggregate Base Course.

F. Section 32 12 16 - Soil Sterilization.

1.4 REFERENCES

A. SSCDOT - Standard Specifications, Department of Transportation, State of California (Caltrans), latest edition, except for references to method of payment, and references to any state furnished materials.

1.5 QUALITY ASSURANCE

A. Perform work in accordance with SSCDOT.

B. Mixing Plant: Conform to SSCDOT.

C. Installation Criteria: Asphalt concrete shall show no evidence of cracking, uneven settlement, improper drainage, or untoward junctions with adjoining or existing surfaces. Work displaying such conditions shall be corrected under the Contractor's guarantee of all work.

1.6 SUBMITTALS

A. Submit under provisions of Division 01.

B. Mix design

C. Certificates of compliance for material.

D. Load tags for delivered material.

1.7 COORDINATION

A. Coordinate with other work, including subgrade preparation, aggregate base placement and soil sterilization.

1.8 ENVIRONMENTAL REQUIREMENTS

A. Do not place asphalt-concrete when atmosphere temperature is less than 50 degrees F, or surface is wet or frozen.

PART 2 - PRODUCTS

2.1 MATERIALS

A. Paint Binder: In accordance with SSCDOT Section 94, Asphaltic Emulsions.

B. Asphalt-Concrete: Type B in accordance with Section 39, SSCDOT, ½ inch or ¾ inch maximum aggregate (medium) as indicated on the Plans. The asphaltic concrete shall be compacted to an average relative compaction of 97 percent, with no single test value being below a relative compaction of 95 percent based on a 50 blow Marshall maximum density. Use asphalt binder performance grade PG 64-10.

C. Seal Coat: Asphalt based seal coat shall be "Guardtop" as manufactured by Western Emulsions Inc, Monarch Beach, California, or approved equivalent.

PART 3 - EXECUTION

3.1 EXAMINATION

A. Verify quantities required. New asphalt-concrete paving is required at all locations shown on the plans, and where existing asphalt-concrete paving to remain is removed or damaged by the Project excavation or related work.

B. Verify that subgrade or base material has been compacted to required relative compaction and is dry.

C. Verify gradients and elevations of base are correct.

D. Verify that subgrade or base material has been sterilized per Section 32 12 16 SOIL STERILIZATION.

3.2 AGGREGATE BASE

A. Where shown on the construction plans, place and compact aggregate base course per Section 32 11 26 AGGREGATE BASE COURSE.

B. Where shown on the construction plans, place asphalt on compacted earth subgrade per Section 31 20 00 EARTHWORK: EXCAVATION, FILLING AND GRADING and Section 31 23 00 TRENCH EXCAVATION AND BACKFILL.

C. A soil sterilant shall be applied over the entire area which is to be paved in accordance with Section 31 12 16 SOIL STERILIZATION

3.3 PREPARATION – PAINT BINDER

A. Apply paint binder to existing asphalt-concrete or concrete surfaces which will be in contact with asphalt-concrete surfacing.

B. Rate of application for all surfaces against which asphalt concrete is to be placed shall be no less than 0.02 and no more than 0.05 gallons per square yard. All vertical concrete surfaces which will be in contact with asphalt concrete surfacing and all areas now in place which will be covered with new surfacing materials and feathering operations shall be coated with a paint binder applied at the rate of 0.05 gallons per square yard.

3.4 INSTALLATION OF ASPHALTIC-CONCRETE

A. Install in conformance with SSCDOT Section 39, Asphalt-Concrete.

B. Thickness - As shown on construction plans. Where thickness exceeds 3 inches, place in no less than 2 layers with top layer no thicker than one inch. Asphaltic concrete shall be laid to the thickness designated on the Plans. The plan thickness is to be considered as a minimum thickness. The Contractor shall lay the asphaltic concrete to a depth required to insure that, after compaction, the in place compacted thickness is equal to or greater than the specified plan thickness.

C. The Contractor shall provide to the Engineer the truck delivery weight tags for the asphaltic concrete material. The quantity delivered shall be equal to or greater than the calculated in place quantity based on the specified thickness and area to be paved as designated on the construction plans and based on a unit density of the asphaltic concrete of 141 pounds per cubic feet.

D. Asphalt type: PG 64-10

E. Compaction Equipment - In accordance with Section 39, SSCDOT. At small difficult areas, equipment may be altered as approved by Engineer.

F. The completed surface shall be thoroughly compacted, free from ruts, depressions, and irregularities and to be true to grade and cross-section.

3.5 TOLERANCES –GENERAL

A. Finished Surface: within 0.02 foot of planned grade.

B. Flatness: Maximum variation of 1/4 inch measured with 10-foot straight edge.

C. Scheduled Compacted Thickness: Not less than specified.

3.6 INSTALLATION OF SEAL COAT

A. Immediately prior to applying the sealer, the surface shall be cleaned of all loose material which might adversely affect bonding of the sealer. Any standard cleaning method such as power sweepers and blowers may be employed.

B. Where cracks in pre-existing pavement exceed 1/2 inch in depth or 1/4 inch in width, or both, they shall be thoroughly cleaned and repaired with asphalt crack filler material before placing the sealer. All cracks between 1/8" and 1/4" in width shall be filled with "Guardtop Crackfiller", as manufactured by Western Emulsions Inc., or approved equivalent, in accordance with the manufacturer's recommendations.

C. Whether or not specifically indicated on the plans, all potholes and badly distorted or depressed areas, except those lying within areas designated for pavement removal and replacement, shall be properly cleaned and repaired by applying a binder coat and hot mix asphalt concrete patch conforming to the requirements of Section 39, SSCDOT, before placing the seal coat. Any vegetation such as soil sterilant approved by the Engineer shall be applied to the area and any required pavement patching shall then be completed.

D. A prime coat of SS-1 asphalt emulsion diluted with water, to 5 parts water to 1 part asphaltic emulsion, shall be applied to all existing (not new) pavement surfaces at a rate of application of 0.05 to 0.10 gallon of diluted primer per square yard.

E. Following the prime coat, two coats of asphalt based seal coat shall be applied. The first coat shall have added to it a silica sand mineral filler which has passed a 50-mesh screen. Apply at a rate of 2 to 3 pounds per 1 gallon of concentrated sealer. When the first coat is dry enough to walk on without picking the material up, a second coat shall be applied without mineral filler. If the manufacturer indicates that the product may be diluted, it may be diluted with no more than 20 percent by volume clean fresh water with the prior approval of the Engineer. The total application rate shall be a minimum of 35 to 45 gallons of undiluted product per 1,000 square feet, as directed by the Engineer. The finished surface shall be smooth and uniform in appearance. If existing depressions are such that aggregate still protrudes after the second coat of asphalt based sealer has been applied, the Contractor shall apply a third coat when so directed by the Engineer.

1. Seal Coat (for new pavement) - a minimum of 20 gallons of undiluted product per 1,000 square feet, as directed by the Engineer.
2. Seal Coat (for existing pavement) - 35 to 40 gallons of undiluted product per 1,000 square feet, as directed by the Engineer.

F. Allow asphalt-concrete to cure 21 days minimum prior to sealing, or as otherwise recommended by the manufacturer.

G. Broom clean asphalt-concrete prior to sealing.

H. Protect sealed surface until it is cured.

3.7 FIELD QUALITY CONTROL

A. Field inspection and testing will be performed under provisions of Division 01.

B. Pavement shall comply with the following:

1. Water shall not be able to accumulate at any point and the surface shall be free to drain to drainage inlets or gutters.
2. The paving contractor shall water flood the surface with the use of a water truck. If, after 30 minutes on a 70 degree F day, “bird baths” are evident in a depth more than 0.01 foot, the paving contractor and the Owner’s representative will determine the best method of correction.
3. A 10 foot straightedge shall be used to check for high spots and ridges. High spots and ridges out of compliance shall be reduced by a remedy determined by the paving contractor and the Owner’s representative.

C. Should a section of the work be not acceptable on the basis of inadequate compaction and/or the mixture becomes loose and broken, mixed with dirt, out of tolerance, or in any other way defective, it shall be repaired or removed and replaced with fresh mixture and immediately compacted to conform to the surrounding area to the satisfaction of the Owner.

3.8 PROTECTION

A. Immediately after placement, protect pavement from mechanical injury.

B. Protect sealed surface until it is cured.

END OF SECTION

THIS PAGE IS LEFT INTENTIONALLY BLANK

SECTION 32 13 13 - SITE CONCRETE IMPROVEMENTS

PART 1 - GENERAL

1.1 RELATED DOCUMENTS

A. Drawings and general provisions of the Contract, including General and Supplementary Conditions and Division 01 Specification Sections, apply to this Section.

1.2 SUMMARY:

A. This Section includes the following:

1. All material, labor, equipment and services necessary to completely install exterior Portland cement flatwork, cast-in-place concrete, and architectural flatwork concrete, accessories and other related items, slabs, ramps and sidewalks and walkways, curb and gutter, mowstrips, and other miscellaneous concrete items of the form and dimensions shown on the plans and necessary to complete the project, and in accordance with the requirements of the Standard Specifications as modified and supplemented by these Special Provisions

2. Drawings and general provisions of Contract, including General and Supplementary Conditions and Division-1 Specifications sections, apply to the work of this section.

B. RELATED SECTIONS:

1. Section 31 20 00 - Earthwork: Excavation, Filling, and Grading

2. Section 32 13 15 - Concrete Reinforcement

1.3 REFERENCES

A. SSCDOT - Standard Specifications, Department of Transportation, State of California (Caltrans), latest edition, except for references to method of payment, and references to any state furnished materials.

B. ACI standards, including but not limited to #304, 305, 306, 308, 309 and 347.

C. ASTM standards, including but not limited to #C-33, C-39, C-94, C-136, C-143, C-150, and C-309.

1.4 SUBMITTALS

A. Submit under provisions of Specification Section SUBMITTALS.

1. Certificates of compliance for materials and mix designs.
2. Load tags for delivered material.
3. Strength testing as required by the approving agency.
4. Integral color sample, where applicable.
5. Application instructions for the architectural finish materials.
6. Accessories and manufacturer's installation specifications.

1.5 QUALITY ASSURANCE

A. Furnish concrete materials conforming with SSCDOT.

B. Perform work in accordance with SSCDOT, unless noted otherwise herein.

PART 2 - PRODUCTS

2.1 MATERIALS

2.2 MIXES

A. Mix Design and Proportions in accordance with SSCDOT:

1. Mix designs with Fly Ash content no greater than 15 percent of the total weight of cementitious materials shall be proportioned by SSCDOT.
2. Provide a maximum of 4 percent air entrainment, unless noted otherwise.
3. Owners Testing laboratory shall review all mix designs before submittal.
4. All concrete shall have the following minimum compressive strengths in accordance with ACI 318 and SSCDOT at 28 days and shall be proportioned within the following limits:.
   a. Site Concrete: Use for exterior concrete slabs on grade including, but not limited to sidewalks, concrete pavement, curbs, gutters, mow strips, utility appurtenances and miscellaneous site improvements.
      1) Strength: 3,000 psi at 28 days
      2) Maximum Aggregate Size: 1-inch
      3) Cement Content: 5.5 sacks/yd minimum
      4) Max Water/Cement Ratio: Per SSCDOT
      5) Admixture Per SSCDOT
   b. Structural: Use for unexposed foundations or footings and retaining walls, unless noted otherwise.
      1) Strength: 4,000 psi at 28 days
      2) Maximum Aggregate Size: 1-inch
      3) Cement Content: 6.5 sacks/yd minimum
      4) Max Water/Cement Ratio: Per SSCDOT
      5) Admixture: Per SSCDOT
   c. Slurry Backfill: Use for backfill of over-excavated trenches, encasement of all penetration, and site utility piping.
      1) Maximum Aggregate Size: 3/8-inch
      2) Cement Content: 2.0 sacks/yd minimum

B. Reinforcement shall comply with relevant portions of Division 32 Specification Section CONCRETE REINFORCEMENT.

PART 3 - EXECUTION

3.1 PREPARATION

A. Subgrade shall conform to the requirements of Division 31 Specification Section EARTHWORK: EXCAVATION, FILLING AND GRADING. The District may elect to verify compacted subgrade elevations by measurement made from adjacent existing improvements or by a template supported by forms.

3.2 GENERAL CONCRETE

A. Concrete placement shall conform to the applicable requirements of Standard Specification Sections 51 and 90. Concrete shall not be placed when the air temperature in the shade at the project site exceeds 95º F or is below 45º F, or when the temperature of the concrete exceeds 85º F.

B. After the concrete has been placed, it shall be struck off to proper section and compacted with a grid of parallel metal bars until a layer of mortar not less than 3/8 inch thick has been brought to the surface. All exposed concrete surfaces shall receive a medium broom finish applied transversely to the line of pedestrian traffic or to the longest dimension of the concrete, as applicable.

C. General concrete surfaces shall be cured by the curing compound method and shall be protected in accordance with the provisions of Subsections 90-1 and 90-2 of the Standard Specifications.

3.3 PROTECTION OF CONCRETE

A. The Contractor shall be responsible for the condition of all concrete work until such time as all work has been completed and is accepted by the District. The Contractor shall limit vehicular travel across concrete until such time as the concrete has achieved strength sufficient that it can support traffic without damage. In no case, however, will vehicles be allowed to travel across new concrete improvements until seven calendar days have passed since the concrete was placed.

3.4 CONCRETE JOINTS

A. Expansion joints and weakened plane joints shall be constructed at the locations shown on the plans or as directed by the Engineer. Where joint locations are not specified on the plans, expansion joints shall be constructed at maximum intervals of 45 feet, and weakened plane joints shall be constructed at maximum intervals of 15 feet.

B. Expansion joints shall be considered as weakened plane joints for the purpose of spacing weakened plane joints. Expansion joints shall be tooled with a 1/4 inch maximum radius edger, and shall be filled with 3/8 inch pre-formed expansion joint filler.

3.5 CONCRETE FINISHES

A. Where concrete is being installed adjacent to or near existing concrete improvements, match the finish of similar concrete surfaces, i.e. new sidewalks shall match existing sidewalks, new curbs shall match existing curbs, etc.

B. Sidewalks and Mowstrips: Medium sweat finish or medium broom finish as required to match existing finishes.

C. Curbs: Trowel smooth and finish with a light brush.

D. Gutters: Medium broom finish

E. Drive approaches and wheelchair ramps: Broom Finish, perpendicular to the direction of travel

3.6 INSTALLATION OF ACCESSORIES

A. Strictly comply with manufacturer's instructions and recommendations and approved details. Securely anchor work to substrate.

3.7 REPAIR AND CLEAN-UP

A. Contractor shall legally remove all trash, debris, containers and excess materials from the site on a periodic basis, and shall keep the work broom clean until Owner’s acceptance.

B. The Contractor shall be held responsible for the repair and/or replacement of new or existing improvements damaged as a result of this work to the satisfaction of the Owner.

C. The Contractor shall provide roll-off bins for wash-out of ready mix concrete trucks and pumpers. Do not allow concrete debris or cement water onto soils scheduled for landscape planting.

END OF SECTION

SECTION 32 13 15 - CONCRETE REINFORCEMENT

PART 1 - GENERAL

1.1 RELATED DOCUMENTS

A. Drawings and general provisions of the Contract, including General and Supplementary Conditions and Division 01 Specification Sections, apply to this Section.

1.2 SUMMARY:

A. This Section includes the following:
   1. Concrete reinforcement

B. RELATED SECTIONS
   1. Section 32 13 13 - Site Concrete Improvements.

1.3 SUBMITTALS

A. Submit in accordance with Specification Section SUBMITTALS and the Contract General Conditions.

   1. Mill test certificates identifying chemical and physical analysis of each load of reinforcing steel delivered. If mill test reports are not available and the quantity of steel for a structure exceeds 5 tons, provide a laboratory test to prove yield strength and bending.
   2. Drawings and placing diagrams for each grade slab including dowels and corner bars.
   3. On the placing diagrams, show all openings for pipelines and architectural features. Include additional reinforcing at openings and corner bar arrangements at intersecting beams, walls, and footings.
   4. Coordinate placing diagrams with the concrete placing schedule.

1.4 PRODUCT DELIVERY

A. Deliver reinforcement to project site in bundles marked with tags indicating bar size and length.

B. Store on wooden supports above ground surface.

PART 2 - PRODUCTS

2.1 BARS

A. Bars shall be deformed billet steel conforming to ASTM A 615, Grade 60. Mixing of steel grades will not be allowed.

2.2 BAR SUPPORTS

A. Bar support shall be concrete or metal chairs, spacers or hangers. Reinforcing bars shall not be supported by forms.

2.3 TIE WIRE

A. Tie wire shall be annealed steel wire of not less than 16-gauge.

PART 3 - EXECUTION

3.1 PLACEMENT

A. Position reinforcement in accordance with the drawings, secure with wire ties or suitable clips at all intersections, and support by an adequate number of concrete or metal chairs, spacers, or metal hangers such that reinforcing bars do not sag more than one quarter of an inch (1/4") between supports. Do not place reinforcement or supports in contact with the forms. Bend tie wires away from the forms in order to provide the specified concrete coverage. To secure reinforcement in position, the Contractor may elect to locate bars additional to those shown on the drawings, but at no additional cost to the Owner.

B. Set reinforcing dowels and anchor bolts in place prior to placing concrete. Do not press them into the concrete after the concrete has been placed.

3.2 SPLICES

A. Splice bars only at locations shown on the drawings. Where splices are not detailed, lap bars 36 bar diameters and 18 inches minimum and stagger adjacent splices 48 bar diameters.

3.3 CLEANING

A. Remove dirt, form oil, excessive rust, cement coating from previous pours, and foreign matter that will reduce bond with concrete.

3.4 PROTECTION DURING CONCRETING

A. Keep reinforcing steel in proper position during concrete placement.

END OF SECTION

SECTION 32 17 23 – PAVEMENT MARKINGS

PART 1 - GENERAL

1.1 SECTION INCLUDES:

A. Furnishing and installing paint parking stall, traffic marking and wording on asphalt-concrete surfaces.

B. Furnishing and installing disabled marking and hatching area on asphalt-concrete pavement.

1.2 RELATED SECTIONS:

A. Section 32 13 13 – Site Concrete Improvements.

B. Drawings and general provisions of Contract, including General and Supplementary Conditions and Division-1 Specifications sections, apply to the work of this section.

1.3 REFERENCES

A. SSCDOT - Standard Specifications, California Department of Transportation (Caltrans), latest edition, except for references to methods of payment and to furnishing of materials by State.

1.4 SUBMITTALS

A. Submit under provisions of Division 1.

B. Certificates of compliance for materials.

1.5 COORDINATION

A. Coordinate work with other work, including associated traffic signing.

B. Commence striping or marking of asphalt-concrete no sooner than 7 days following any sealing of the asphalt-concrete.

PART 2 - PRODUCTS

2.1 MATERIALS

A. Paint: Quick drying, high visibility water soluble acrylic striping paint; Stripe Master, Wikel Mfg. Company, or similar by Sherwin-Williams, J.E. Bauer, or PPG, or approved equal.

B. Paint shall be of color indicated on the construction plans.

PART 3 - EXECUTION

3.1 EXAMINATION

A. Verify that site is ready for application.

3.2 PREPARATION

A. Identify installation locations. Place parking stall striping, traffic marking, wording, disabled symbol and access striping at locations, as shown on construction plans.

B. Thoroughly clean all surfaces to be painted.

C. Employ equipment and methods appropriate to the work site.

D. Provide vehicular and traffic controls per Division 1.

3.3 INSTALLATION

A. Apply paint striping and marking as indicated on the plans.

B. Apply paint uniformly, straight and true, with equipment designed for traffic striping and marking applications.

C. Apply paint striping and marking per Section 84 of SSCDOT, except supply paint conforming to 2.1 A. of this specification.

D. Apply a minimum of 2 separate coats of paint at all striping and marking locations, including asphalt-concrete and concrete surfaces.

E. Paint international symbol of accessibility at the location as shown on the plans.

F. Paint accessible access area striping at the location as shown on the plans.

3.4 FIELD QUALITY CONTROL

A. Field inspection will be performed under provisions of Division 1.

END OF SECTION

SECTION 32 28 52 – PARKING LOT FURNITURE

PART 1 - GENERAL

1.1 SECTION INCLUDES

A. Furnish and install signs, posts and concrete wheelstops

1.2 RELATED SECTIONS:

A. Drawings and general provisions of Contract, including General and Supplementary Conditions and Division-1 Specifications sections, apply to the work of this section.

B. Section 32 12 17 – Asphalt Paving

C. Section 32 13 13 – Site Concrete Improvements.

1.3 REFERENCES

A. SSCDOT - Standard Specifications, California Department of Transportation (Caltrans), latest edition, except for references to methods of payment.

B. CBC – California Building Code, latest edition.

1.4 SUBMITTALS

A. Submit under provisions of Specification Section - SUBMITTAL PROCEDURES.

1.5 COORDINATION

A. Coordinate work with Owner's personnel.

PART 2 - PRODUCTS

2.1 MATERIALS

A. Signs: As per detail drawing.

B. ADA Accessible Signs: As per detail drawing.

C. Sign Posts: 2-inch diameter galvanized iron pipe, A-120, Schedule 40, unless otherwise shown on drawing.

D. Concrete for Sign Footings: Specification Section - SITE CONCRETE IMPROVEMENTS

E. Wheelstop: 3 or 4 feet long pre-cast concrete per detail drawing.

PART 3 - EXECUTION

3.1 EXAMINATION

A. Verify existing and proposed site conditions.

3.2 PREPARATION

A. Identify installation locations.

B. Locate, identify, and protect existing above and below grade utilities from damage.

C. Employ equipment and methods appropriate to the work site.

3.3 INSTALLATION

A. Install all sign posts straight and plumb in concrete footings as shown on plans.

B. Secure all signs to posts with vandal resistant galvanized hardware furnished by the Contractor.

C. Orient direction of all signs as indicated on the plans.

D. Install concrete wheelstops at locations shown on drawings. Anchor each wheelstop with two deformed reinforcing bars driven into the asphalt concrete pavement per detail drawing.

3.4 FIELD QUALITY CONTROL

A. Field inspection will be performed under Division 01.

END OF SECTION

SECTION 323113 – CHAIN LINK

PART 1 - GENERAL

1.1 SUMMARY

A. This Section includes the following:
   1. Provide all material, labor, equipment and services necessary to furnish and install Chain Link Fencing, Gates, Fittings and Accessories necessary to complete the Project as indicated by the Contract Documents.

B. Related Sections: The following Project Manual Sections contain requirements that relate to this section:
   1. ALL DIVISION 00 SPECIFICATION SECTIONS.
   2. ALL DIVISION 01 SPECIFICATION SECTIONS.
   3. 03 30 00 CAST-IN-PLACE CONCRETE
   4. 10 14 53 ROAD AND PARKING SIGNAGE
   5. 31 20 00 EARTHWORK
   6. ALL SPECIFICATION SECTIONS IN THE SITE AND INFRASTRUCTURE SUBGROUP.

1.2 REFERENCES

A. Standards:
   1. In accordance with the following standards:
      a. CLFMI Chain Link Fence Manufacturer's Institute

1.3 SYSTEM DESCRIPTION

A. Fencing Requirements at Preschool and Pre-Kindergarten facilities:
   1. General: Fence installation shall eliminate pinch points and sharp elements.
   2. Cut all bolt threads flush, maximum two threads exposed.
   3. Smooth all rough edges or burrs within fenced play area.
   4. Provide plastic caps over all fence fabric edges and wires.

1.4 SUBMITTALS

A. Submit in accordance with Specification Section - SUBMITTAL PROCEDURES:
   1. Product Data:
      a. Posts, Rails, and Fittings.
      b. Chain link Fabric, Reinforcements, and Attachments.
      c. Gates, Hardware and Fittings.
      d. Privacy Slats.
   2. Shop Drawings:

a. Includes dimension plans, elevations, sections, details, and attachments to other work. Show accessories, hardware, gate operation, operational clearances and footings.
b. Include coordination of the work in this section with that of related work of other sections for proper interface of the completed work.
1) Coordinate and obtain approvals from the work of other related sections prior to submitting to the Architect.
2) Furnish to contractor as noted under Specification Section - CAST-IN-PLACE CONCRETE for installation of:
a) Hook Bolts.
b) Drop Rod Receiver.

3. Quality Assurance:
a. Certificates:
1) Materials Certification.
2) Installer's Certification.

4. Closeout Submittals in accordance with the following:
a. Maintenance Data in accordance with Specification Section - PROJECT CLOSEOUT.
b. Project Record Documents in accordance with Specification Section - PROJECT RECORD Documents.
c. Warranty in accordance with Specification Section - WARRANTIES.

1.5 QUALITY ASSURANCE

A. Qualifications:
1. Manufacturer/Supplier Qualifications:
a. Company operating in the United States, having U.S. Manufacturing facility/facilities, experienced in successfully producing/supplying products similar to that indicated for this Project for a minimum of five (5) years and with sufficient production/supply capacity to produce/supply required units without causing delay in the work.
2. Installer Qualifications:
a. Company with successful experience installing similar projects and products in accordance with ASTM F 567 "Practice for Installation of Chain-Link Fence", and have at least five (5) years of experience.

B. Regulatory Requirements:
1. In accordance with Specification Section - REGULATORY REQUIREMENTS, and the following:
a. CARB Materials and equipment used for this Project shall comply with the current applicable regulations of the California Air Resources Board (CARB)and the Environmental Protection Agency (EPA), in the area where the project is located.
b. CBC General Requirements:
1) All gates within the Path of Travel (POT) shall meet all applicable accessible requirement specifications for doors, as defined by DSA/ACS and CBC Requirements.

C. Certifications:

1. Materials Certification: Complying with current ASTM specifications for all manufacturerer's materials.
2. Installer's Certification: certified in writing by the manufacturer listed herein as qualified to install manufacturer's product (or system) in accordance with manufacturer's warranty requirements.

D. Preinstallation Meeting
1. Conduct meeting at Project Site.
2. Review coordination of work specified in the Section and elsewhere.

1.6 DELIVERY, STORAGE, AND HANDLING

A. Delivery:
1. Deliver fabric, posts, rails, and other manufactured items so as not to be damaged or deformed. Package materials for protection during transportation and handling.
2. Each length of chain-link fabric shall be tightly rolled and firmly tied.
3. Each roll shall carry a tag showing the class of coating, the specified sire size, the mesh size, the length and height of fabric in the roll, ASTM A 392 "Specification for Zinc-Coated Steel Chain-Link Fence Fabric" and the name of mark of the manufacturer.

B. Handling:
1. Unload, and store materials in a manner to prevent bending, warping, twisting, and surface damage.

C. Storage:
1. Stack materials on platforms or pallets, covered with suitable weather tight and ventilated covering to ensure dryness. Do not store materials in contact with other materials that might cause staining, denting, or other surface damage.

1.7 PROJECT CONDITIONS

A. Field Measurements: Verify layout information for chain-link fences, and gates shown on the Drawings in relation to property survey and existing structures. Verify dimensions by field measurements.

1.8 WARRANTY

A. Contractor's General Warranty:
1. In accordance with Specification Section - WARRANTIES.

B. Manufacturer's Warranty:
1. In accordance with manufacturer's written standard warranty
2. Manufacturer's standard form in which manufacturer agrees to repair or replace components of chain-link fences and gates that fail in materials or workmanship within the specified warranty period.
   a. Failures include, but are not limited to, deterioration of metals, metal finishes, and other materials beyond normal weathering.
   b. Installer shall have manufacturers signed Certified Installer Agreement as a rider to the warranty.

c. Warranty Period from date of Substantial Completions: Five (5) Years.

C. Installer's Warranty:
1. In accordance with the terms of the Specification Section - WARRANTIES:
a. Warranty period Five (5) Years.

PART 2 - PRODUCTS

2.1 MATERIALS

A. Fence:
1. Fabric:
a. General: Steel Wire Fabric shall comply with ASTM A 392 "Specification for Zinc-Coated Steel Chain-Link Fence Fabric" and CLFMI Product Manual and with requirements indicated.
1) Steel wire helically wound and interwoven in such a as to provide a continuous mesh without knots or ties.
2) Fabric to be in one-piece heights measured between top and bottom of outer edge of selvage.
b. Wire:
1) Standard: Use 9 gage (0.148 inch) copper bearing steel wire.
2) Exception: Use 11 gage (0.120 inch) copper bearing steel wire at all tennis court enclosures.
c. Mesh Size:
1) Standard: 2 inch mesh.
2) Exception: Use 1-3/4" mesh at all tennis court enclosures.
d. Fabric Selvage: Knuckled at both top and bottom edges.
e. Protective Coating: ASTM A 392 "Specification for Zinc-Coated Steel Chain-Link Fence Fabric", Type II Zinc-Coated, Class 2 - 2.0 oz./sq.ft., galvanized by the hot-dip process after weaving.
1) Quality to withstand 6 one minute immersions per ASTM A 239 "*Standard Test Method for Locating the Thinnest Spot in a Zinc (Galvanized Coating on Iron or Steel Articles by the Preece Test (Copper Sulfate Dip)"*.
f. Strength: Wire in completed fabric after galvanization to have 7,000 pounds per square inch minimum tensile strength.
2. Posts:
a. General: All posts shall be round, seamless or continuously welded, steel pipe complying with ASTM F 1043 "Specification for Strength and Protective Coatings on Steel Industrial Chain Link Fence Framework", Group IA, Table 3, Heavy Industrial Fence Framework, schedule 40 pipe per ASTM F 1083 "Specification for Pipe, Steel, Hot-Dipped Zinc-Coated (Galvanized) Welded, for Fence Structures".
1) Protective Coating: Complying with Type A – Zinc Coated, min. 2.0 oz./sq.ft, per ASTM A 123 "Specification for Zinc (Hot-Dip Galvanized) Coatings on Iron and Steel Products", for exterior coating and interior coating after fabrication.
a) Zinc Coated, min. 4.0 oz./sq.ft, per ASTM A 653 "Specification for Steel Sheet, Zinc-Coated (Galvanized) or Zinc-Iron Alloy Coated (Galvanealed) by the Hot-Dip Process" for rolled-form shapes.
b. Line, and Terminal (end, corner, pull and gate) Posts:

1) 2-3/8 inch O.D. (2.375 inch O.D.) 3.65 pounds per lineal foot.
2) 2-7/8 inch O.D. (2.875 inch O.D.) 5.79 pounds per lineal foot.
3) 3-1/2 inch O.D. (3.50 inch O.D.) 7.58 pounds per lineal foot.
4) 4 inch O.D. (4.00 inch O.D.) 9.12 pounds per lineal foot.
5) 4-1/2 inch O.D. (4.50 inch O.D.) 10.80 pounds per lineal foot.
6) 5-9/16 inch O.D. (5.563 inch O.D.) 14.63 pounds per lineal foot.
7) 6-5/8 inch O.D. (6.625 inch O.D.) 18.99 pounds per lineal foot.
8) 8-5/8 inch O.D. (8.625 inch O.D.) 28.58 pounds per lineal foot.

3. Rails:
   a. General: All rails shall be round, seamless or continuously welded, steel pipe complying with ASTM F 1043 “Specification for Strength and Protective Coatings on Steel Industrial Chain Link Fence Framework”, Group IA, Table 3, Heavy Industrial Fence Framework, schedule 40 pipe per ASTM F 1083 "Specification for Pipe, Steel, Hot-Dipped Zinc-Coated (Galvanized) Welded, for Fence Structures".
      1) Protective Coating: Complying with Type A – Zinc Coated, min. 2.0 oz./sq.ft, per ASTM A 123 "Specification for Zinc (Hot-Dip Galvanized) Coatings on Iron and Steel Products", for exterior coating and interior coating after fabrication.
         a) Zinc Coated, min. 4.0 oz./sq.ft, per ASTM A 653 “Specification for Steel Sheet, Zinc-Coated (Galvanized) or Zinc-Iron Alloy Coated (Galvanealed) by the Hot-Dip Process” for rolled-form shapes.
   b. Top, Horizontal and Bottom Rails:
      1) 1-5/8 inch O.D. (1.625 inch O.D.) 2.27 pounds per lineal foot.
4. Tension Wire:
   a. Metallic Coated Steel Wire: Seven gage (0.177 inch diameter), marcelled tension wire complying with ASTM A 824 "Specification for Metallic-Coated Steel Marcelled Tension Wire for Use With Chain Link Fence".
   b. Metallic Coating: ASTM A 817 "Specification for Metallic-Coated Steel Wire for Chain-Link Fence Fabric and Marcelled Tension Wire", Type II Zinc-Coated, Class 5 – 2.0 oz./sq. ft., galvanized by hot-dip process.
5. Hook Bolts:
   a. 3/8 inch diameter galvanized steel.
6. Tie Wires and Hog Rings:
   a. Nine gage (0.148 inch diameter) galvanized steel wire, complying with ASTM F 626 "Specification for Fence Fittings". Galvanized minimum zinc coating of 1.2 oz/sq. ft.
7. Tension Bars:
   a. 1/4 inch thick x 3/4 inch galvanized bar steel, complying with ASTM F 626 "Specification for Fence Fittings". Galvanized minimum zinc coating of 1.2 oz/sq. ft. by hot-dip process after fabrication.
8. Tension Bands:
   a. 7/8 inch by 3/32 inch thick minimum galvanized band steel complying with ASTM F 626 "Specification for Fence Fittings". Galvanized minimum zinc coating of 1.2 oz/sq. ft. by hot-dip process after fabrication.
9. Truss Rod Assembly:
   a. 3/8 inch diameter galvanized steel truss rod and galvanized turnbuckle for adjustment in compliance with ASTM F 626 "Specification for Fence Fittings". Galvanized minimum zinc coating of 1.2 oz/sq. ft. by hot-dip process after threading.
   b. Assembly capable of withstanding a tension of 2,000 lbs.
10. Fittings:

a. General: In accordance with ASTM F 626 "Specification for Fence Fittings" and shall be hot-dip galvanized with a minimum of minimum of 1.2 oz/sq.ft., of zinc coating of surface area
b. Line and Terminal Post Caps: Fabricated from pressed steel or cast iron.
   1) Caps shall fit snugly over posts and exclude moisture from inside when tubular post are used.
   2) Provide Line Post Cap with loop to receive Tension Wire or Top Rail.
c. Rail and Brace Ends: Fabricated from pressed steel or round steel.
   1) Shall be provided when horizontal rail or brace are required.
d. Top Rail Sleeves: Fabricated from pressed steel or round steel.
   1) Rail sleeve material shall be a minimum of 0.051 inch in thickness and a minimum of 6 inches in length.
   2) Sleeve shall be fabricated to prevent movement along the rail.
e. Rail Clamps: Fabricated from galvanized pressed steel.
   1) Line and Corner Boulevard clamps for connecting intermediate and bottom rails in the fence line-to-line posts.

B. Gates:
1. General: All framing members shall be round, seamless or continuously welded, steel pipe complying with ASTM F 1043 "Specification for Strength and Protective Coatings on Steel Industrial Chain Link Fence Framework", Group IA, Table 3 Heavy Industrial Fence Framework, schedule 40 pipe per ASTM F 1083 "Specification for Pipe, Steel, Hot-Dipped Zinc-Coated (Galvanized) Welded, for Fence Structures".
   a. All frame corners (perimeter and interior) shall be of welded construction.
   b. Frame members shall not be spaced no greater than 8 feet apart vertically and horizontally.
   c. Protective Coating: Complying with Type A – Zinc Coated, min. 2.0 oz./sq.ft, per ASTM A 123 “Specification for Zinc (Hot-Dip Galvanized) Coatings on Iron and Steel Products”, for exterior coating and interior coating, galvanized after fabrication.
      1) Zinc Coated, min. 4.0 oz./sq.ft, per ASTM A 653 "Specification for Steel Sheet, Zinc-Coated (Galvanized) or Zinc-Iron Alloy Coated (Galvanealed) by the Hot-Dip Process" for rolled-form shapes.
      2) Weld joints shall be coated with zinc-rich paint in accordance with ASTM A 780 "Practice for Repair of Damaged and Uncoated Areas of Hot-Dip Galvanized Coatings".
   d. Fabric: Shall be the same as specified for the Fence.
   e. Truss Rod Assembly: Shall be the same as specified for the Fence.
2. Swing Gates:
   a. General: Gate fabrication shall comply with ASTM F 900 "Specification for Industrial and Commercial Swing Gates".
   b. Frame: Galvanized.
      1) 1-7/8 inch O.D. (1.875 inch O.D.) 2.72 pounds per lineal foot.
   c. Hardware:
      1) Hinges:
         a) For man gates: Refer to Specification Section - HARDWARE.
         b) For other gates: Galvanized malleable iron or heavy gage pressed steel post and frame hinges.
      2) Single Leaf Latch: Positive locking gate latch fabricated of 5/16 inch thick by 1-3/4 inch pressed steel, galvanized after fabrication and shall have provision for a padlock.

3) Double Leaf Latch: 5/8 inch diameter galvanized Drop rod arranged to engage the gate stop. Locking devised shall be constructed so the center drop rod cannot be raised when the gate is locked. Latching devices shall have provision for a padlock.
4) Gate Stop: Fabricated from 1 inch diameter galvanized steel pipe and 2 inch galvanized metal washer.
5) Keepers: Fabricated from galvanized malleable steel Gate Holdback and 1-5/8 inch diameter galvanized pipe with post cap.
6) ADA Gate Lock: Rust-proof aluminum/stainless steel lock assembly with latching mechanism, levers (both sides), key lock (lockable from both sides), keepers (latch or stop), post adapters, spacers, chain-link holders, tension bands and fittings as required.
   a) Lock cores per Specification Section – HARDWARE.
7) Exit Door Gate: Galvanized exit door assembly with 16 gage x width as require steel plate, lock box, adjustable receiver bracket, guard and fittings as required.
   a) Surface mounted Panic Bar per Specification Section – HARDWARE.
8) ADA Gate Kick-Plate:
9) 1/4 inch galvanized steel plate, minimum 10" high x width as required.

3. Rolling Gates:
   a. General: Gate fabrication shall comply with ASTM F 1184 “Specification for Industrial and Commercial Slide Gates”.
   b. Frame:
      1) 1-7/8 inch O.D. (1.875 inch O.D.) 2.72 pounds per lineal foot.
   c. Pipe Track and Bracket:
      1) 1-5/8 inch O.D. (1.625 inch O.D.) 2.27 pounds per lineal foot.
         a) Galvanized Pipe Track Bracket and fittings as required.
   d. Roller Assembly: Galvanized rear wheels, bolts, nuts, and bracket
   e. Wheel Assembly: Double wheel carrier, galvanized with "U-Bolts" and eight (8) inch hard rubber wheels and fittings as required.
   f. Steel AngleTrack: 1-1/2" x 1-1/2" x 1/8" galvanized steel with welded 3/8 inch diameter "J-Bolts" at 32 inches on center.
   g. Guide Post: Galvanized.
      1) 2-7/8 inch O.D. (2.875 inch O.D.) 5.79 pounds per lineal feet.

C. Concrete:
   1. Footings: Site Concrete as specified in Specification Section – CAST-IN-PLACE CONCRETE.
   2. Non-shrink, Non-metallic Grout: Premixed, factory-packaged, non-staining, non-corrosive, non-gaseous grout complying with ASTM C 1107 "Specification for Packaged Dry, Hydraulic-Cement Grout (Non-shrink)". Provide grout, recommended in writing by manufacturer, for exterior applications.
   3. Erosion-Resistant Anchoring Cement: Factor-packaged, non-shrink, non-staining, hydraulic-controlled expansion cement formulation for mixing with potable water at Project site to create pourable anchoring, patching, and grouting compound. Provide formulation that is resistant to erosion from water exposure with needing protection by a sealer or waterproof coating and that is recommended in writing by manufacturer, for exterior applications.

D. Accessories:

1. Plastic Caps, sized to fit securely on fence wire fabric, as manufactured by STOCK CAP, or approved equivalent.

PART 3 - EXECUTION

3.1 EXAMINATION

A. Examine areas and conditions, with Installer present, for compliance with requirements for site clearing, earthwork, pavement work, and other conditions affecting performance of the work.
   1. Do not begin installation before final grading is completed unless otherwise permitted by Architect.

B. Proceed with installation only after unsatisfactory conditions have been corrected.

3.2 PREPARATION

A. Layout:
   1. Stake locations of fence lines, and terminal (end, corner, pull and gate) posts. Do not exceed intervals of 500 feet or line of sight between stakes. Indicate locations of utilities, lawn sprinkler system, underground structures, benchmarks, and property monuments.

3.3 INSTALLATION

A. General: Construct and install chain-link fencing in compliance with ASTM F 567 "Practice for Installation of Chain-Link Fence" and more stringent requirements indicated.

B. Posts:
   1. Post Excavation: Drill or hand-excavate holes for posts to diameters and spacings indicated, in firm, undisturbed soil.
   2. Post Setting: Set posts in concrete at indicated spacing into firm, undisturbed soil.
      a. Verify that posts are set plumb, aligned, and at correct height and spacing, and hold in position during setting with concrete or mechanical devices.
      b. Concrete Fill: Place concrete around posts to dimensions indicated and vibrate or tamp for consolidation. Protect aboveground portion of posts from concrete splatter.
         1) Exposed Concrete Footing: Extend 2 inches above grade; shape and smooth to shed water.
         2) Concealed Concrete Footing: Stop 2 inches below bottom of material to allow covering top of footing.
   3. Terminal Posts: Locate terminal end, corner, gate posts, and locate terminal pull posts at changes in horizontal or vertical alignment of 30 degrees or more, unless noted otherwise.
      a. End Corner, Pull and Gate Posts shall be braced and trussed for fabric 6 feet or higher, and for fabric 5 feet or higher at fencing without top rail.
   4. Line Posts: Space line posts uniformly not to exceed 10 feet on center.

C. Rails:

1. Top Rail: Run rail continuously through line post caps, bending to radius for curved runs and terminating into rail end attached to posts or post caps fabricated to receive rail at terminal and gate posts, maintaining plumb position and alignment of fencing. Provide expansion couplings as recommended in writing by fencing manufacturer.
    a. Supply in lengths approximately 20 feet long and splice rail using top rail sleeves minimum 6 inches long.
    b. Secure rail to end, corner, pull and gate terminal posts with a brace band and rail end.
2. Brace Rail: Install brace rails between all end, corner, gate, and pull terminal posts and the first line posts, maintaining plumb position and alignment of fencing. Securely attach to post with fittings.
    a. Locate horizontal braces at mid-height of fabric greater than 72 inches in height, on fences with top rail and at two-third fabric height on fences without top rail.
        1) Spacing of brace rails not to exceed 6 feet on center vertically,
3. Horizontal Rail: Install horizontal rails between all line posts, maintaining plumb position and alignment of fencing. Securely attach to posts with fittings.
    a. Locate horizontal rails at mid-height of fabric 12 foot or higher,
        1) Spacing of horizontal rails not to exceed 12 feet on center vertically,
4. Bottom Rails: Install and secure to posts with fittings.

D. Truss Rod Assembly:
1. Diagonally brace all end, corner, pull and gate terminal posts to adjacent line posts with truss rods and turnbuckles. Install braces at end and gate posts and at both sides of corner and pull posts.
2. Install so posts are plumb when diagonal rod is under proper tension.

E. Tension Wire:
1. Furnish and be responsible for accurate placement of Hook Bolts for installation in mow strip at mid-point between Line Posts.
2. Pull wire taut, without sags, independently and prior to the Fabric, between the terminal Posts and secured to the terminal Post using a brace band. Secure the tension wire to the chain link fabric with a hog rings a 18 inches on center and to each line post with a tie wire, maintain plumb position and alignment of fencing. Install tension wire in locations indicated before stretching fabric. Provide horizontal tension wire at the following locations
    a. Extended along bottom of fence fabric. Install bottom tension wire within 4 inches of bottom of fabric and tie to each post with not less than same diameter and type of wire.
    b. Hook Tension Wire thru Hook Bolts.

F. Fabric:
1. Apply Fabric to outside of enclosing framework. Leave a maximum of 2 inches between finish grade or surface and bottom selvage, unless otherwise indicated. Pull Fabric taut and tie to Posts, Rails, and Tension Wires. Anchor to framework so fabric remains under tension after pulling force is released.

G. Tension or Stretcher Bars: Thread through Fabric and secure to end, corner, pull, and gate Posts with Tension Bands and 5/16 inch diameter carriage bolts at 12 inches on center maximum.

H. Tie Wire and Hog Rings: Use wire of proper length to firmly secure Fabric to line Posts, Rails, Truss Rod Assembly and Tension Wire per ASTM F 626 "Specification for Fence Fittings".
   1. Fasten Fabric to Line Post with Tie Wire at 12 inches on center maximum.
      a. Attach wire at one end to chain-link fabric, wrap wire around post a minimum of 180 degrees, and attach other end to chain-link fabric.
      b. Bend ends of wire to minimize hazard to individuals and clothing
   2. Fasten Fabric to Rails (top, brace, horizontal and bottom) with Tie Wire at 18inches on center maximum.
   3. Fasten Fabric to Tension Wire with Hog Rings, spaced a maximum of 18 inches on center.

I. Gates:
   1. General: Installation of gates and gate posts in compliance with ASTM F 567 "Practice for Installation of Chain-Link Fence".
   2. Gates shall be level, plumb and secure for full operation without interference.
      a. Attach fabric as for fencing.
      b. Attach hardware using tamper-resistant or concealed means.
      c. Furnish and be responsible for accurate placement of ground-set items in concrete mow strips.
      d. Adjust hardware for smooth operation and lubricate where necessary
   3. Swing Gates:
      a. Gates have a bottom clearance of 3inch in the closed position, grade permitting.
      b. Hinge and latch offset opening space from the gate frame to the post shall be no greater that 3 inches in the closed position.
      c. Gate leaf holdbacks shall be installed for single gates 5 feet or greater in width and all double gates, unless noted otherwise.
   4. Rolling Gates: Install gate according to manufacturer's written instructions, aligned and true to fence line and grade
      a. Gates have a bottom clearance of 3inch in the closed position, grade permitting.

J. Fasteners:
   1. All fasteners shall be installed with the smooth side on the secure side of the fence.
      a. All bolts shall be peened over to prevent removal of the nut.
   2.

3.4 ADJUSTMENT

A. Gates: Adjust gates to operate smoothly, easily, and quietly, free of binding, warp, excessive deflection, distortion, nonalignment, misplacement, disruption, or malfunction, throughout entire operational range. Confirm that latches and locks engage accurately and securely without forcing or binding.

B. Lubricate hardware and other moving parts.

3.5 CLEAN UP

A. The area of the fence line shall be left neat and free of any debris caused by the installation of the fence.

END OF SECTION

SECTION 32 33 10 - TACTILE/DETECTABLE WARNING SURFACE TILE

PART 1 - GENERAL

1.1 RELATED DOCUMENTS

A. Drawings and general provisions of the Contract, including General and Supplementary Conditions and Division 01 Specification Sections, apply to this Section

1.2 SECTION INCLUDES

A. Tactile/Detectable Warning Surface Tile where indicated.

1.3 SUBMITTALS

A. Product Data: Submit manufacturer's literature describing products, installation procedures and routine maintenance.

B. Samples for Verification Purposes: Submit two tile samples minimum, 6 inch by 8 inch of kind proposed for use.

C. Shop drawings are required for products specified showing fabrication details; composite structural system; plans of tile placement including joints, and material to be used as well as outlining installation materials and procedure.

D. Material Test Reports: Submit test reports from qualified independent testing laboratory indicating that materials proposed for use are in compliance with requirements and meet the properties indicated. All test reports shall be conducted on Surface Applied tactile tile system as certified by a qualified independent testing laboratory.

E. Maintenance Instructions: Submit copies of manufacturer's specified maintenance practices for each type of tactile tile and accessory as required.

1.4 QUALITY ASSURANCE

A. Provide Surface Applied tactile tiles and accessories as produced by a single manufacturer.

B. Installer's Qualifications: Engage an experienced Installer certified in writing by tactile manufacturer as qualified for installation, who has successfully completed tile installations similar in material, design, and extent to that indicated for Project.

C. Americans with Disabilities Act (ADA): Provide tactile warning surfaces that comply with detectable warnings on walking surfaces section of Americans with Disabilities Act (Title 49 CFR TRANSPORTATION, Part 37.9 STANDARDS FOR ACCESSIBLE TRANSPORTATION FACILITIES, Appendix A, Section 4.29.2 DETECTABLE WARNINGS ON WALKING SURFACES.

D. California Code of Regulations (CCR): Provide only approved DSAAC detectable warning products as provided in the California Code of Regulations (CCR). Title 24, Part 1, Articles 2, 3 and 4 and Part 2, Section 205 definition of "Detectable Warning". Section 11B-406 for "Curb

ramps, blended transitions and islands" and Section 11B-705 for "Detectable warnings and detectable directional texture".

E. Detectable Warning Texture: Division of the State Architect (DSA Access Compliance) approved products shall be used, compliance with CBC Section 11B-705.2, IRs 11B-2, 11B-3 and 11B-4 and the California Accessibility Reference Manual.

1. Truncated Domes: provide raised Detectable Warnings with diameter of 0.9 inch at base tapering to 0.45 inch at top, height of 0.2 inch, with center-to-center spacing of 2.35 inches and corner domes spaced at 0.896 inch from the corner edges of tile. Provide raised truncated domes in a square grid (in-line) pattern.

a. Truncated Dome: shall contrast visually with adjoining surfaces, light-on- dark or dark-on-light. Material used to provide contrast shall be integral part of walking surface. Warning surface shall differ from adjoining surface in resiliency or sound to cane contact.

1.5 DELIVERY, STORAGE AND HANDLING

A. Tiles shall be suitably packaged or crated to prevent damage in shipment or handling. Finished surfaces shall be protected by sturdy wrappings and tile type shall be identified by part number.

B. Tiles shall be delivered to location at building site for storage prior to installation.

1.6 SITE CONDITIONS

A. Environmental Conditions and Protection: Maintain minimum temperature of 40°F in spaces to receive tactile tiles for at least 48 hours prior to installations, during installation, and for not less than 48 hours after installation. Store tactile tile material in spaces where they will be installed for at least 48 hours before beginning installation. Subsequently, maintain minimum temperature of 40°F in areas where work is completed.

B. The use of water for work, cleaning or dust control, etc. shall be contained and controlled and shall not be allowed to come into contact with the passengers or public. Provide barricades or screens to protect passengers or public.

C. Disposal of any liquids or other materials of possible contamination shall be made in accordance with federal state and local laws and ordinances.

D. Cleaning materials shall have code acceptable low VOC solvent content and low flammability if used on the site.

1.7 EXTRA STOCK

A. Deliver extra stock to storage area designated by engineer. Furnish new materials from same manufactured lot as materials installed and enclose in protective packaging with appropriate identification for Surface Applied tactile tiles. Furnish not less than two (2) percent of the supplied materials for each type, color and pattern installed.

1.8 WARRANTY (DETECTABLE WARNINGS AND DIRECTIONAL TEXTURE)

A. Special Warranty: Manufacturer's standard form in which manufacturer agrees to repair or replace components of detectable warnings and directional surface products that fail in materials or workmanship within specified warranty period.

1. Failures include, but are not limited to, the following:
   a. Shape, color fastness, confirmation, sound-on-cane acoustic quality, resilience, and attachment will not degrade significantly.
   b. Degrade significantly means that product maintains at least 90 percent of its approved design characteristics, as determined by the authority having jurisdiction.
2. Warranty Period: Five years from date of Final Completion.
3. Authority: California Building Code Sections 11B-406 and 11B-407, Division of the State Architect Interpretation of Regulations (IR) 11 B-2, 11B-3 11B-4.

PART 2 - PRODUCTS

2.1 MANUFACTURERS

A. Available Manufacturers: Subject to compliance with requirements, manufacturers offering products that may be incorporated in the Work include, but are not limited to, the following:

1. Engineered Plastics Inc., Armor Tile.
2. ADA Solutions, Inc., North Billerica, MA.

B. Detectable Warning Texture: Division of the State Architect (DSA/Access Compliance) approved products shall be used, compliance with CBC Section 11B-705.2, IRs 11B-2, 118-3 and 11B-4 and the California Accessibility Reference Manual.

1. Truncated Domes: provide raised Detectable Warnings with diameter of 0.9 inch at base tapering to 0.45 inch at top, height of 0.2 inch, with center-to-center spacing of 2.35 inches and corner domes spaced at 0.896 inch from the corner edges of tile; Provide raised truncated domes in a square grid (in-line) pattern.
   a. Truncated Dome: shall contrast visually with adjoining surfaces, light-on- dark or dark-on-light. Material used to provide contrast shall be integral part of walking surface. Warning surface shall differ from adjoining surface in resiliency or sound to cane contact.

2. Detectable Warning Texture (Truncated Domes): Plastics/Composites: Armor Tile, ADA Tactile Systems by Engineered Plastics Inc., North Billerica, or equal.

C. The Vitrified Polymer Composite (VPC) Surface Applied Tactile Tile specified is based on Armor-Tile manufactured by Engineered Plastics Inc. Existing engineered and field tested products which are subject to compliance with requirements, may be incorporated in the work and shall meet or exceed the specified test criteria and characteristics.

D. Color: Yellow conforming to Federal Color No. 33538. Color shall be homogeneous throughout the tile.

2.2 MATERIALS

A. Fasteners: Color matched, corrosion resistant, flat head drive anchor: W diameter x 1 3/4" long, or manufacturer's recommended fasteners.

B. Adhesive and Sealant: Manufacturer's standard.

PART 3 - EXECUTION

3.1 INSTALLATION

A. Surface Applied: The following installation instructions shall be used for tactile warning tiles installed at existing concrete surfaces.

1. During all surface preparation and tile installation procedures, ensure adequate safety guidelines are in place and that they are in accordance with the applicable industry and government standards.
2. The application of all tile, adhesives, mechanical fasteners, and caulking shall be in strict accordance with the guidelines set by their respective manufacturers.
3. Ensure that surfaces being prepared and fabricated to receive the tiles are constructed correctly and adequately for tile installation. Review design drawings with the Contractor prior to the construction and refer any and all discrepancies to Engineer.
4. Set the tile true and square to the curb ramp area as detailed in the design drawings, so that its location can be marked on the concrete surface. Use thin permanent marker. Remove tile when done marking its location.
5. The surface to receive the detectable warning surface tile (not recommended for asphalt) is to be mechanically cleaned with diamond cup grinder or shot blaster to remove any dirt or foreign material. This cleaning and roughening of the concrete surface should include at least 4 inches around the perimeter of the area to receive the tile, and also along the cross pattern established by the corresponding areas on the backside of the tile. Those same areas should then be cleaned with a rag soaked in Acetone.
6. Immediately prior to installing the detectable warning surface tile, the concrete surfaces must be inspected to ensure that they are clean, dry, free of voids, curing compounds, projections, loose material, dust, oil, grease, sealers and determined to be structurally sound and cured for minimum of 30 days.
7. Using Acetone, wipe the backside of the tile around the perimeter and along the internal cross pattern, to remove any dirt or dust particles from the area to receive the adhesive.
8. Apply the adhesive on the backside of the tile, following the perimeter and internal cross pattern established by the tile manufacturer. Sufficient adhesive must be placed on the prescribed areas to have full coverage across the 2" width of the adhesive locator. A 3 x 4 foot tile will typically require an entire tube of adhesive.
9. Set the tile true and square to the curb ramp area as detailed in the design drawings.
10. Standing with both feet applying pressure around the molded recess provided in the tile, drill a hole true and straight to a depth of 3W using the recommended diameter bit. Drill through the tile without hammer option until the tile has been successfully penetrated, and then with hammer option to drill into the concrete.
11. Immediately after drilling each hole, and while still applying foot pressure, vacuum, brush or blow away dust and set the mechanical fastener as described below, before moving on to the next hole.
12. Mechanically fasten tiles to the concrete substrate using a hammer to set the fasteners. Ensure the fastener has been placed to full depth in the dome, straight, and flush to the top of dome. Drive the pin of the fastener with the hammer, taking care to avoid any

inadvertent blows to the truncated dome or tile surface. A plastic deadblow or leather hammer is recommended.

13. Working in a sequence that will prevent buckles in the tile, proceed to drill and install all fasteners in the tile's molded recesses.
14. Following the installation of the tiles, the perimeter caulking sealant should be applied. Follow the perimeter caulking sealant manufacturer's recommendations when applying. Tape all perimeter edges of the tile and also tape the adjacent concrete back 1/2" from the tile's perimeter edge. Tool the perimeter caulking with a plastic applicator or spatula to create a straight edge in a cove profile between the tile and adjacent concrete. Remove tape immediately after tooling perimeter caulking sealant.
15. Do not allow foot traffic on installed tiles until the perimeter caulking sealant has cured sufficiently to avoid tracking.
16. If installing adjacent tiles, note the orientation of each tile. Careful attention will reveal that one of the long edges of the tile is different than the other, in regard to the tiny dotted texture. You may also note a larger perimeter margin before the tiny dotted texture pattern begins. Consistent orientation of each Tile is required in order that the truncated domes on adjacent tiles line up with each other.
17. In order to maintain proper spacing between truncated domes on adjacent tiles, the tapered edge should be trimmed off using a continuous rim diamond blade in a circular saw or mini-grinder. The use of a straightedge to guide the cut is advisable. All cuts should be made prior to installation of the tiles.
18. If installing adjacent tiles, care should be taken to leave a 1/8 inch gap between each. If tiles are custom cut to size, and if pre-molded recesses (to receive fasteners) are removed by the cut, then any truncated dome can be center-drilled with a 5 inch through hole, and countersunk with a suitable bit, to receive mechanical fasteners. New holes should be created no closer to the edge of the tile than any of the other perimeter fastener pre-molded recesses. Care should be taken to not countersink too deeply. Fasteners should be flush with the top of the truncated dome when countersunk properly.
19. Adhesive or caulking on the surface of the Tile can be removed with Acetone.

B. Wet Set: The following installation instructions shall be used for tactile warning tiles installed at new concrete surfaces.

1. During all surface preparation and tile installation procedures, ensure adequate safety guidelines are in place and that they are in accordance with the applicable industry and government standards.
2. The application of all tile, adhesives, mechanical fasteners, and caulking shall be in strict accordance with the guidelines set by their respective manufacturers.
3. Ensure that surfaces being prepared and fabricated to receive the tiles are constructed correctly and adequately for tile installation. Review design drawings with the Contractor prior to the construction and refer any and all discrepancies to Engineer.
4. Set the tile true and square to the curb ramp area as detailed in the design drawings.
5. Immediately prior to installing the detectable warning surface tile, the wet concrete surfaces must be inspected to ensure that it is clean and free of debris.
6. Do not remove protective plastic covering on detectable warning tile product until tile is installed and concrete is fully cured.
7. Slowly press the detectable warning tile into the wet concrete until the base of the truncated domes is flush with the adjacent concrete. Do not stand on the tile during installation. Tap the detectable tile with a rubber mallet as required to ensure all edges are flush with concrete. Install anchors into wet concrete as specified per manufacturer's recommendation and ensure that the anchors are flushed with the detectable tile surface.

Provide weight to the detectable tile surface if "floating" occurs after tile placement. All detectable tile edges shall be flush with adjacent concrete.

8. While the concrete is workable, a 1/8" deep troweled edge shall be installed around the tile perimeter. Finish the concrete as required per specifications. Ensure concrete edge do not have any low areas that collect water.
9. Set the tile true and square to the curb ramp area as detailed in the design drawings.
10. If installing adjacent tiles, note the orientation of each tile. Careful attention will reveal that one of the long edges of the tile is different than the other, in regard to the tiny dotted texture. You may also note a larger perimeter margin before the tiny dotted texture pattern begins. Consistent orientation of each Tile is required in order that the truncated domes on adjacent tiles line up with each other.
11. In order to maintain proper spacing between truncated domes on adjacent tiles, the tapered edge should be trimmed off using a continuous rim diamond blade in a circular saw or mini-grinder. The use of a straightedge to guide the cut is advisable. All cuts should be made prior to installation of the tiles.
12. Remove protective plastic sheeting after all post-installation treatments are complete and the concrete has cured.

3.2 CLEANING AND PROTECTING

A. Protect tiles against damage during construction period to comply with tactile tile manufacturer's specification.

B. Protect tiles against damage from rolling loads following installation by covering with plywood or hardwood.

C. Clean tactile tiles not more than four days prior to date scheduled for inspection intended to establish date of substantial completion in each area of project. Clean tactile tile by methods recommended by manufacturer.

END OF SECTION

SECTION 32 84 32 – UNDERGROUND SPRINKLERS

PART 1 - GENERAL

1.1 DESCRIPTION

A. Provide all materials, labor, equipment and services necessary to furnish and install Irrigation System, accessories and other related items necessary to complete the Project as indicated by the Contract Documents unless specifically excluded. The extent of the underground irrigation system is shown on the drawings. Point of Connection (P.O.C). and controller location are shown on the drawings.

1.2 RELATED WORK SPECIFIED ELSEWHERE

32 93 00 - PLANTS

A. Drawings and general provisions of the Contract, including General and Supplemental Conditions and Division 1 Specification Sections, apply to work of this section.

1.3 CODES AND REGULATIONS

A. All work and materials shall be in full accordance with the following codes adopted and amended by the authority having jurisdiction. Nothing in these drawings or specifications is to be construed to permit work not conforming to these codes. The specifications shall govern in the event that the drawings or specifications call for material or methods of construction of higher quality or standard than required by these codes.

1. California Plumbing Code
2. California Administrative Codes:
   a. Title 8, Industrial Relations
   b. Title 19, Public Safety
3. California Electrical Code
4. Standards and Regulations of other agencies or organizations as listed in this specification relating to products or procedures. For example, American Society for Testing and Materials.

1.4 EXPLANATION OF DRAWINGS

A. The intent of the drawings and specifications is to indicate and specify a complete and efficient sprinkler irrigation system ready for use in accordance with the manufacturer's recommendations, and all applicable local codes and ordinances. Contractor shall provide all labor, materials, equipment and services to fully complete the irrigation system as deemed necessary by the Owner. Questions concerning interpretation of irrigation plans and specifications shall be the responsibility of the Landscape Architect.

B. All plot dimensions are approximate. Before proceeding with any work, the Contractor shall carefully check and verify all dimensions and shall report any variations to the Project Inspector and Landscape Architect.

C. Due to the scale of the drawings, it is not possible to indicate all offsets, fittings, etc., which may be required. The Contractor shall carefully investigate the structural and finished conditions affecting all his work, and plan his work accordingly, furnishing such fittings, etc., as may be required to meet such conditions. Drawings are generally diagrammatic and indicative of the work to be installed in the most direct and workmanlike manner, so that conflicts between sprinkler systems, planting, utilities, and architectural features will be avoided. Contractor shall provide and install any and all material, labor and operations necessary to provide a complete fully functional irrigation system as deemed acceptable by the Owner. No additional compensation will be given to the Contractor for work required by the Owner.

D. All work called for on the drawings by notes shall be furnished and installed whether or not specifically mentioned in the specifications.

E. The Contractor shall not willfully install the irrigation facilities as indicated on the drawings when it is obvious in the field that unknown obstructions might not have been considered in the engineering. Such obstructions or differences should be brought to the attention of the Project Inspector.

F. The Contractor shall examine carefully the site of work contemplated and the proposal, plans, specifications, and all other contract documents. It will be assumed that the Contractor has investigated and is satisfied as to the conditions to be encountered, as to the character, quality, and quantity of work to be performed and materials to be furnished, and as to the requirements of the specifications. The Contractor shall take necessary precautions to protect existing site conditions that are to remain. Should damage be incurred, the Contractor shall make the necessary repair or replacement to bring it back to its original condition at his own expense.

G. Prior to cutting into the soil, the Contractor shall coordinate with the Project Inspector locate all cables, conduits, sewers, septic tanks, and other such utilities as are commonly encountered underground and he shall take proper precaution not to damage or disturb such improvements. If a conflict exists between such obstacles, notify the Project Inspector who will consider realignment of the proposed work. The Contractor will proceed in the same manner if a rock layer or any other condition encountered underground makes change advisable. Should utilities not shown on the plans be found during excavations, Contractor shall promptly notify the Project Inspector for instructions as to further action. Failure to do so will make Contractor liable for any and all damage thereto arising from his operations subsequent to discovery of such utilities not shown in plans.

H. The Contractor shall verify the correctness of all finish grades within the work area in order to insure the proper soil coverage (as specified) of the sprinkler system pipes. The Contractor shall verify and be familiar with location and size of the proposed water supply (P.O.C.). He shall make approved type connection and install new work.

I. Within seven (7) working days after start of the irrigation system installation the Contractor shall be responsible for notifying in writing the Landscape Architect of any equipment or methods indicated on the drawings or in the specifications conflict with local codes or capabilities of specified

equipment, are incompatible or an error is apparent prior to installing. In the event the Contractor neglects to do this, he will accept full responsibility for any revisions necessary. No additional compensation will be given to the Contractor for necessary revisions resulting from this event.

1.5 PERMITS AND INSPECTIONS

A. The Contractor shall obtain and pay required fees to any governmental or public agency. Any permits for the installation or construction of any of the work included under this contract, which are required by any of the legally constituted authorities having jurisdiction, shall be obtained and paid for by the Contractor, each at the proper time. He shall also arrange for and pay all costs in connection with any inspections and examination required by these authorities.

B. In all cases, where inspection of the irrigation system work is required and/or where portions of the work are specified to be performed under the direction and/or inspection of the Owner authorized Representative the Contractor shall notify the Owner's Authorized Representative, at least 48 hours in advance of the time when such inspection and/or direction is required. Any necessary re-excavation or alterations to the system needed because of failure of the Contractor to have the required inspection, shall be performed at the Contractor's own expense.

1.6 GUARANTEE

A. Irrigation system shall be guaranteed for one year from date of final acceptance by the Architect.

1.7 OPERATIONS AND MAINTENANCE INSTRUCTIONS/RECORD DOCUMENTS

A. The Contractor shall prepare and deliver to the Owner Representative within ten (10) calendar days prior to completion of the construction, all required and necessary descriptive material in complete detail and sufficient quantity, properly prepared in two individually bound sets of Operating and Maintenance Manuals.

These manuals shall describe the material installed and shall be in sufficient depth to permit operating personnel to understand, operate and maintain all equipment. Spare part lists and related manufacturer identification shall be included for each installed equipment item. Each complete, bound manual shall contain the following information:

1. Index sheet stating Contractor's address and telephone number, duration of guarantee period, and list of equipment, with names and addresses of local manufacturer representatives.
2. The Contractor to issue a "CERTIFICATE OF CONSTRUCTION COMPLIANCE" to the Project Inspector which indicates that all work done, materials and equipment used and installed are in compliance with the approved plans, specifications and all authorized revisions.
3. Complete operating and maintenance instruction on all major equipment.
4. Complete set of manufacturer's literature and specifications of material installed, including parts list.
5. Diagrams for all wiring of controller, controller valves, etc.
6. Initial electrical data on each control valve.
   a. Ohmmeter reading for each valve taken at the controller and valve.
   b. Voltmeter reading for each valve.

B. The contractor shall furnish one set of As-Built drawings, in form of bond copies, as record documents.

1. Label first page of each document, or set of documents, "PROJECT RECORD" in neat large printed letters on lower right hand corner. Record information concurrently with construction progress. Prints for this purpose may be obtained from the Project Inspector. This set of drawings shall be kept on the site and shall be used only as a record set. Do not conceal any work until required information is recorded.

   These drawings shall also serve as work in progress sheets, and the Contractor shall make neat and legible annotations thereon daily as the work progresses, showing the work as actually installed. These drawings shall be available at all times for inspection and shall be kept in a location designated by the Project Inspector.

2. Drawings: Legibly mark to record actual construction:
   a. Horizontal and vertical locations of underground utilities and appurtenances, referenced to permanent surface improvements. Give sufficient horizontal and vertical dimensions to accurately trace route and invert of each concealed line or item. Accurately locate each capped, plugged or stubbed line.
   b. Field changes of dimension and detail.
   c. Changes made by Field Order, by Addenda, or by Change Order.
   d. Details not on original Contract Drawings.
3. Deliver all Record Documents (As-Builts) to Project Inspector. Accompany submittal with transmittal letter in duplicate, containing:
   a. Date.
   b. Project title.
   c. Contractor's name and address.
   d. Title and n umber of each Record Document (As-Built).
   e. Signature of Contractor or his authorized representative.

C. The Contractor shall provide one controller chart for each controller installed. The chart will show the area irrigated by the controller and shall be the maximum size the controller door will allow. The chart may be a reduced drawing of the actual plans. The chart shall be colored with a different color for each station. The chart shall be laminated or covered in a watertight envelope.

D. The Contractor shall provide three (3) copies of laminated, typewritten legible controller programming charts for each individual controller. The chart shall show all stations on controller, run times, start times and program.

1.8 SUBMITTALS

A. Contractor shall submit six (6) copies of complete lists of proposed materials to the Landscape Architect, including manufacturer's name and catalog numbers. No substitution will be allowed without prior written approval by the Landscape Architect.

B. Shop drawings shall follow for all equipment, including dimensions, capacities, and other characteristics as listed in product specifications. Materials and equipment shall not be ordered until given written approval by the Landscape Architect.

C. When specific name brands of equipment and materials are used, they are intended as preferred standards only. This does not imply any right upon the part of the Contractor to furnish other materials unless specifically approved in writing as equal in quality and performance by the Landscape Architect. Decisions by the Landscape Architect shall govern as to what name brands of equipment and materials are equal to those specified on the plans and his decisions shall be final.

It shall be the responsibility of the prospective bidder to furnish proof as to equality of any proposed equipment or material.

D. Approval of any item, alternate or substitute indicates only that the products apparently meet the requirements of the drawings and specifications on the basis of the information or samples submitted.

Manufacturer's warranties shall not relieve the Contractor of his liability under the guarantee. Such warranties shall only supplement the guarantee.

E. Provide three (3) keys for each of the irrigation controllers.

F. Acceptance of any submittals, deliverables, or other work product of the Contractor shall not be construed as assent that contractor has complied, nor in any way relieved the Contractor of, compliances with (i) the applicable standard of care of (ii) applicable statutes, regulations, rules, guidelines, and contract requirements.

1.9 DEFINITIONS

A. Piping: All pipe fittings, valves, and accessories as required for a complete piping system.

B. PVC: Polyvinyl Chloride.

C. Agencies and Organizations:
1. ASTM- American Society for Testing and Materials
2. AWWA- American Water Works Association
3. IAPMO- International Association of Plumbing and Mechanical Officials
4. NEC - National Electrical Code.
5. UL - Underwriter's Laboratories

1.10 REJECTION OF MATERIAL OR WORK

A. The Owner reserves the right to reject any material or work which does not conform to the contract plans, specifications without any written approval from the Landscape Architect. The rejected material or work shall be removed or corrected by the Contractor at no additional cost to the Owner.

PART 2 - PRODUCTS

2.1 PIPING MATERIALS

A. Piping:

1. Pressure pipe/upstream of control valve:
   a. 2 ½" and larger: Bell end 'O' ring gasketed 'Purple Tinted' for non-potable PVC 1120 Class 200, SDR21 high impact pipe (ASTM D2241 & ASTM D1784).

   b. 2" and smaller: Solvent weld bell end 'Purple Tinted' for non-potable PVC 1120 Schedule 40 high impact pipe (ASTM D1785 and ASTM D1784).
2. Lateral line/downstream of control valve:
   a. Solvent weld bell end 'Purple Tinted' for non-potable PVC 1120 Schedule 40 high impact pipe (ASTM D1784 & ASTM D1785).
3. Sleeving under paving:
   a. Solvent weld bell end PVC 1120 Schedule 40 high impact pipe (ASTM D1784 & ASTM D1785).
4. All pipe shall be continuously and permanently marked and conform with the following information:
   Manufacturer's name or trademark, nominal pipe size, schedule and type of pipe, pressure rating in PSI and (NSF) seal of approval. Pipe shall be of improved rigid polyvinyl chloride (PVC) compound manufactured by Cresline-West or approved equal.
5. For connections between mainlines and electric control valves, Schedule 80 PVC ASTM D2464.

B. Fittings:

1. For PVC plastic pipe: white rigid polyvinyl chloride (PVC) Schedule 40 type I and II grade 1, solvent weld socket fittings ASTM D2466 for all lateral line pipe 2 ½" and smaller, gray rigid polyvinyl chloride (PVC) Schedule 80, grade 1, solvent weld socket fittings ASTM D2467 for all lateral line pipe 3" and larger. Ductile Iron deep bell epoxy coated gasketed fittings, AWWA C153, Class 350, Grade 65-45-12, ASTM A-536, push on joints with EPDM gaskets meeting ANSI / AWWA C111 / A21.11 and four (4) cast lugs for joint restraints as manufactured by Leemco, Inc. (909) 422-0088, or approved equivalent, for all mainline pipe. Joint restraints shall be provided at all elbow, tees, bends, etc. Joint restraints shall be Leemco, Inc. (909) 422-0088 epoxy coated LH series joint restraint for IPS pipe, or equivalent. All fittings shall bear the manufacturer's name or trademark, material designation, size, applicable (IPS) schedule, and (NSF) seal of approval.
2. All plastic fittings and connectors shall be injection molded of an improved polyvinyl chloride compound featuring high tensile strength, high chemical resistance and high impact strength in terms of current ASTM standards for such fittings and as manufactured by Lasco Industries, or approved equal. Where threads are required in plastic fittings, these shall be injection molded also.
3. Saddles shall be used for connections between irrigation mainline and electric control valves, quick coupling valves, blow off valves and air release valves. Saddles shall be coated ductile iron with two (2) stainless steel straps. Romac Industries (800) 426-9341, # 202NS or equal.

C. Galvanized pipe and fittings:
1. Galvanized Pipe shall be hot dip galvanized continuous welded, seamless steel pipe SCH 40 conforming to applicable current (ASTM) standards.
2. Galvanized Fittings shall be galvanized malleable iron ground joint SCH 40 conforming to applicable current (ASTM) standards.

D. Solvent Weld Adhesive:

1. All socket type connections shall be joined with primer and PVC solvent cement which shall meet the requirements of ASTM F656 for primer and ASTM D2564, "Standard Specification for Solvent Cements for Polyvinyl Chloride (PVC) Plastic Pipe and Fittings." Solvent cement joints for plastic pipe and fittings will be made as prescribed by manufacturer. The high chemical resistance of the pipe and fitting compounds specified in the foregoing sections makes it mandatory that an aggressive colored primer, which is a true solvent for (PVC) be used in conjunction with a solvent cement designed for the fit of pipe and fittings of each size range specified. A medium bodied solvent cement to be used on pipe joints with interference fits only and not with Schedule 80 fittings. A heavy bodied solvent cement can be used for all classes and schedules of pipe and fittings.

E. Pipe Thread Sealant:

1. A non-hardening all purpose sealant and lubricant similar to Permatex or Lasco pipe thread sealant which is certified by the manufacturer to be harmless to PVC pipe and fittings. Apply sealant to clean male threads, brushing into grooves and to the first three threads of the female threads. A good quality grade of teflon tape recommended by the manufacturer for use with plastics may also be used. Minimum width of tape to be used is 3/4". A minimum of two wraps and a maximum of three wraps to be used.

2.2 VALVES

A. Electric Control Valves: Globe or angle valves operated by low-power solenoid, normally closed, manual flow adjustment. Sizes and types as shown on drawings.

B. Control Wire: Paige P7350 two wire direct burial communication cable with polyethylene jacket, AWG-PE type UL approved for direct burial, minimum size #14 or equivalent.

C. Control Wire Connectors: 3M DBR/Y-6 Direct Bury splice kit, and wire connectors or equivalent.

D. Control Wire Marking: Christy wire marker or equivalent.

E. Control Valve Boxes: Old Castle / Christy concrete control valve box with concrete lid or equivalent.

F. Mainline and Quick Coupler valve boxes: Old Castle / Christy concrete valve box with concrete lid or equivalent.

G. Mainline valve: Nibco cast iron resilient wedge with operating nut or equivalent. Conforming to AWWA C509 Standards.

H. Quick Coupling Valve: Two piece quick coupling valve as shown on plan.

I. Control valve box marking: Stencil on top of lid in black paint with 2" high letters showing controller letter and station number.

2.3 IRRIGATION HEADS

A. Spray Head: Molded plastic body with plastic nozzles. Refer to schedule on drawings. Manufacturer's numbers are listed with description.

B. Rotor Head: Molded plastic and stainless steel construction, Gear driven with memory arc, balanced nozzle sets. Refer to schedule on drawings. Manufacturer's numbers are listed with description.

C. Dripline: Polyethylene tubing with inline emitter. Pre emergent herbicide impregnated self cleaning emitter welded to dripline wall. Refer to schedule on drawings. Manufacturer’s numbers are listed with description.

2.4 CONTROLLER

A. Solid state microcomputer controller, completely automatic in operation, which shall electrically start the sprinkler cycle and program and time the individual stations, capable of accessing weather information and adjusting station run times for current weather conditions. Controller shall utilize two wire communication technology and signal decoders for communication to irrigation control valves. All materials and equipment installed as part of the two wire irrigation controller system shall be from one manufacturer and shall be as recommended / required by the manufacturer of the two wire control system.

Controller shall have attached instruction booklet, integral 24V transformer, clock indicating time of day and day of week, 24V master valve circuit and terminal connection strip. Controller shall be universal remote ready with pre-installed connectors.

2.5 UNIVERSAL REMOTE

A. Remote unit shall be able to have complete control over any solid state or electro/mechanical controllers. Unit shall have a range of one mile from receiver to transmitter located at controller.

B. Remote unit shall be capable of coded FM transmissions which eliminate unwanted interference and works amid buildings or hilly terrain.

2.6 BOOSTER PUMP

A. Provide product as described in Specification Section 32 84 32 irrigation Booster Pump Appendix attached.

2.7 OTHER MATERIALS

A. Materials not specifically indicated but necessary for proper execution of this work shall be of first quality as selected by the Contractor subject to the acceptance of Landscape Architect.

B. All materials appearing in the legend and details of the irrigation drawings are part of this job. Contractor is responsible for installation according to plans and details. The system shall efficiently and uniformly irrigate all areas and perform as required by these plans and specifications.

PART 3 - EXECUTION

3.1 SYSTEM DESIGN

A. Design pressure and flow as indicated on drawings.

B. Contractor shall verify design layout and specifications as specified on drawings and inform the Project Inspector and the Landscape Architect of discrepancies, errors or incompatibility in writing prior to installation of irrigation system. Failure to inform the Project Inspector or Landscape Architect of any discrepancy seven working days prior to beginning system installation will institute the responsibility of corrective action to the Contractor at no expense to the Owner.

3.2 PIPING INSTALLATION

A. General:

1. Any equipment installed by the Contractor and deemed to be for the use of the Owner in various situations (i.e., control valves, control panels, etc.) shall be so installed to be readily accessible and quickly operable. Equipment deemed by the Owner to be inoperable for its intended purpose shall be reinstalled by the Contractor in an operable position before approval will be given. Any changes made by the Contractor shall be done without any additional cost to the Owner.
2. The Contractor shall be responsible for layout of proposed facilities and any minor adjustments required due to differences between site and drawings. Any such deviations in layout shall be within the intent of the original drawings, and without additional costs to the Owner. The Owner will indicate the proposed precise location of the control panels. Head spacing on drawings is diagrammatic. Head spacing and patterns shall be adjusted to provide complete and adequate coverage with a minimum spray on non-planted areas. Where head spacing is not noted, Contractor is to install sprinkler heads evenly along the irrigation area's perimeter. Flush all lines prior to installation of heads.
3. Support piping without strain on joints or fittings and allow for piping expansion and contraction. "Snake" pipe into trench in accordance to manufacturer's recommendations to allow for expansion. Lay on solid sub-base, at uniform depth.

B. The Contractor shall examine all other portions of working drawings and plan trenching and pipe lays so that no conflict will arise between irrigation and any other work. Any corrective action will be the Contractors responsibility at no further expense to the Owner.

C. Excavations:

1. Excavations shall be open vertical construction, sufficiently wide to provide free working space around the work installed and to provide ample space for backfilling and tamping.

   The use of a vibratory plow or methods other than open vertical trenching will not be allowed without the written approval of the District or the Landscape Architect. To obtain such approval, a field test must be performed, at the proposed site, with the equipment to be used in the presence of the Landscape Architect. The field test is to indicate if the proposed site is favorable to the plowing method. Approval for plowing at one location does not allow the use of plowing at another location. Approval for plowing must be obtained for each location

where the use of plowing is proposed. If, at previously approved plowing locations, conditions for plowing become unfavorable as determined by the Project Inspector or Landscape Architect, plowing shall be terminated.

2. Trenches for pipe and equipment shall be cut to required grade lines, and compacted to provide an accurate grade and uniform bearing for the full length of the line.
3. When two pipes are to be placed in the same trench, it is required to maintain a minimum four inch (4") horizontal separation between pipes.
4. Depth of trenches shall be sufficient to provide a minimum cover above the top of the pipe as follows:
   a. 24-inch over main lines.
   b. 18-inch minimum over non-pressure (rotary pop-up) lateral lines.
   c. 12-inch minimum over non-pressure (pop-up spray head) lateral lines.
   d. 24-inch minimum over lines located out in road surface area of paved streets.
5. Maximum cover above the top of the pipe shall not exceed twelve inches (12") greater than the required minimum cover.

D. Assemblies

1. Routing of pressure supply lines as indicated on drawings is diagrammatic. Install lines (and various assemblies) in such a manner as to conform to details on plans.
2. Install all assemblies specified herein according to the respective detail drawings or specifications pertaining to specific items required to complete the work. Perform work according to best standard practice, with prior approval.
3. Install no multiple assemblies on plastic lines. Provide each assembly with its own outlet.
4. All brass pipe and fittings shall be assembled using an approved teflon tape, or equivalent, applied to the male threads only. A minimum of two (2) wraps and a maximum of three (3) wraps of an approved teflon tape will be required.
5. All plastic and galvanized steel threaded pipe and fittings shall be assembled using an approved teflon tape applied to the male threads only. A minimum of two (2) wraps and a maximum of three (3) wraps of an approved teflon tape will be required.
6. No elbows, tees or valves are to be located closer than five (5') feet of each other without prior approval of the Project Inspector.

E. Line Clearance

1. All lines shall have a minimum clearance of four inches (4") from each other, and six inches (6") from lines of other trades. Parallel lines shall not be installed directly over one another.

F. Plastic to Steel Connections

1. At all plastic (PVC) pipe connections, the Contractor shall work the steel connections first. Connections shall always be plastic into steel, never steel into plastic. An approved teflon tape shall be used on all threaded (PVC) to steel, never steel into plastic. An approved teflon tape shall be used on all thread (PVC) to steel pipe joints applied to the male threads only, and light wrench pressure is to be applied. A minimum of two (2) wraps and a maximum of three (3) wraps of an approved 3/4" wide teflon tape will be required.
2. A non-hardening sealant and lubricant similar to Permatex or LASCO pipe sealant may be used in lieu of teflon tape. Apply sealant to clean male

threads brushing into grooves and to the first three threads of the female threads.

G. Plastic Pipe

1. The Contractor shall exercise care in handling, loading, unloading, and storing plastic pipe and fittings. All plastic pipe and fittings shall be stored under a weatherproof roofed structure before using and shall be transported in a vehicle with a bed long enough to allow the length of pipe to lie flat so as not to be subject to undue bending or concentrated external load at any point.
   a. All lumber, rubbish, rubble, concrete and rocks shall be removed from the trenches by the Contractor. Pipe shall have a firm uniform bearing for the entire length of each pipe line to prevent uneven settlement. Wedging or blocking under riser tees shall be done only if specified on the plans. Pad trenches with soil as necessary to provide uniform bearing surfaces.
   b. Where extensive lengths of pipe are installed, snake pipe in trench from side to side to allow for expansion and contraction. One additional foot per one hundred (100) feet of pipe is the minimum allowance for snaking. Never lay pipe when there is water in the trench or when the temperature is 32 degrees F or below.
   c. All changes in direction of pipe shall be made with fittings, not by bending.
   d. Make solvent weld joints with a non-synthetic bristle brush in the following sequence:
      1) Make sure pipe is cut square and all rough edges and burrs are removed. All connecting surfaces are properly cleaned and dry prior to application of pipe primer.
      2) Apply an even coat of colored primer to pipe and fitting prior to application of solvent.
      3) Apply an even coat of solvent to the outside of the pipe, making sure that the coated area is equal to the depth of the fitting socket.
      4) Apply an even light coat of solvent to the inside of the fitting.
      5) Apply a second coat of solvent to the pipe.
      6) Insert the pipe quickly into the fitting and turn pipe approximately one-eighth to one-quarter turn to distribute the solvent and remove air bubbles. Hold the joint for approximately fifteen seconds so the fittings do not push off the pipe.
      7) Using a clean rag, make sure to wipe off all excess solvent to prevent weakening at joint.
      8) Exercise care in going to the next joint so that pipe is not twisted, thereby disturbing the last completed joint.
      9) Allow at least fifteen minutes setup time for each welded joint before moving.
      10) Repairing plastic pipe when damaged shall be done by replacing the damaged portion of pipe.

H. Concrete Thrust Blocks:

1. Concrete anchors or thrust blocks shall be provided on main pipelines at abrupt changes in pipeline grade, changes in horizontal alignment (elbows, tees and crosses), reduction in pipe

size (reducers, reducing tees or crosses), end-line caps or plugs, and in-line valve to absorb any axial thrust of the pipeline. The pipe manufacturer's recommendation for thrust control shall be followed. Thrust blocks must be formed against solid unexcavated earth (undisturbed). Do not enclose entire joint in concrete. Provide a minimum of three (3) cubic feet of 3,500 PSI concrete for each concrete thrust block.

3.3 SPRINKLER HEAD INSTALLATION

A. Head spacing on drawings is diagrammatic. Head spacing and patterns shall be adjusted to provide complete and adequate coverage with a minimum spray on non-planted areas. Flush all lines prior to installation of heads.

B. Rotary pop-up sprinkler heads adjacent to walks or mowstrips shall be set four inches (4") from edge of walk or mowstrips and pop-up spray heads adjacent to walks or mowstrips shall be set one inch (1") minimum/two inches (2") maximum from edge of walk or mowstrips or as noted otherwise on the plans and details. Pop-up spray heads located in shrub / groundcover planting areas shall have the top of the pop-up set one inch (1”) above surrounding finish grade of soil.

C. Upon completion of the installation, the Contractor shall adjust sprinkler heads to properly distribute water flow and shall place entire irrigation system in first-class operating condition.

D. Adjustable sprinkler heads shall be adjusted by fully opening the sprinkler furthest from the control. Adjust sprinkler heads which spray toward buildings in shrub areas so that water spray does not contact side of buildings.

E. Install irrigation heads in accordance with details on plans.

3.4 PIPE DEPTH AND BACKFILL

A. Backfill shall not be placed until the installed system has been inspected and approved by the Project Inspector.

B. Backfill material shall be approved soil. Unsuitable martial, such as pipe remnants and wire including clods and rocks over two inches (2") in size, shall be removed from the premises and disposed of legally at no cost to the Owner. Backfill for first six inches (6") around mainline pipe and control wires shall be native soil.

C. All backfilling shall be done carefully and shall be properly tamped. All soil shall be tamped and puddled to eliminate any voids.

D. Surplus earth remaining after backfilling shall be disposed of as directed by the Project Inspector.

E. Backfilling for all pipe shall be carried out in two basic stages.

1. Stage One Backfilling:

This shall be accomplished as soon as possible after the pipe is laid. A bedding of uniform depth with no voids must be provided along the entire length of the pipe. The bedding dirt should be placed in the trench and tamped into the areas under the pipe, using a suitable tool. Joints should be left exposed until hydrostatic tests are completed. Cover only those portions of the pipe necessary

to prevent movement or damage.

2. Stage Two Backfilling:

This shall be completed after all hydrostatic tests are completed and the piping system has been thoroughly checked for leaks or other defects. Continue to add backfill soil in four inch (4") layers and hand tamp to achieve density similar to adjacent soil. After twelve inches (12") in main line trenches and eight inches (8") in lateral line trenches of hand tamped soil is in place over the pipe and fittings, backfilling can be continued, using light machinery to place dirt in the trenches in six inch (6") layers and to compact the dirt to conform to adjacent soil. Extreme care should be taken to avoid damage to the pipe from machinery that is too heavy.

All trenches shall then be water jetted to assure uniform settling and compaction. Backfilling operations will not be considered complete until the top surface has been graded to conform to the adjacent soil. All rocks uncovered and not used as backfill must be collected and removed from the site.

F. PVC piping and fittings shall not be backfilled during periods of extreme heat or when a sudden lowering of temperature of the pipe may cause separation of joints or fittings.

3.5 CONTROL WIRE

A. Install control wire in PVC conduit. Provide long radius sweep elbows at all turns and control valve boxes. Provide minimum of six inches (6”) separation to irrigation mainline. Minimum cover shall be 24 inches. Seal splice with 3M DBR/Y-6 splice kit. Tag all control wires at control valves and controller with approved control wire markers.

B. Wire size shall be determined by the number of valves operating on a given wire and the distance from the controller to the farthest valve, as specified by the remote control valve manufacturers charts. Splices are not encouraged but allowed. All splice connections must be provided in a valve box.

3.6 ELECTRIC CONTROL VALVES

A. Electric control valves shall be adjusted so the most remote heads operate at the pressure recommended by the head manufacturer. Electric control valves shall be adjusted so a uniform distribution of water is applied by the heads to the planting areas for each individual valve system. The Contractor shall make all necessary connections for operation. Where pressure regulating electric control valves are called for the Contractor shall adjust the valve so a uniform distribution of water is applied by the heads.

B. Valve boxes and lids shall be set to finished grade or as indicated on the Construction Plans. Stencil electric control valve identification numbers on top of valve box with two inch (2") high letters with black paint. Not more than one electric control valve may be installed in each box.

C. Electric control valves shall be connected and aligned to provide the most efficient flow of water to the irrigation heads. Each valve is to be enclosed in the specified valve box. The valve box shall be secured on firm soil clear of valves and wiring connections. Backfill carefully to prevent settlement and subsequent damage.

D. A valve box must be provided at all underground irrigation control wire splice

connections.

3.7 AUTOMATIC CONTROLLER

A. Contractor shall be required to program and schedule the controller to maximize and utilize the design flow indicated. Programming and scheduling shall be compatible with controller on site. It shall be the complete responsibility of the Contractor to ensure that the interface between the water supply and controller provide for a fully functioning, smooth running irrigation system. Contractor shall provide all programming, scheduling of irrigation controller necessary to utilize the design flow indicated.

B. Install controller, pedestal, and accessories per manufacturer's approved details, construction plans and contract requirements.

C. Install automatic controller chart in laminated or watertight plastic envelope inside controller cover showing which valves are connected to which stations on controller.

D. Controller Charts:

1. The Contractor shall provide one controller chart for each controller supplied.
2. The chart shall show the area controlled by the automatic controller and shall be he maximum size that the controller door will allow.
3. The chart may be a reduced drawing of the actual as-built system. However, in the event the controller sequence is not legible when the drawing is reduced, it shall be enlarged to a size that will be readable when reduced.
4. The chart shall be colored with a different color for each station.
5. The chart shall be a permanent bond copy or approved equal and enclosed in a waterproof envelope or laminated.

E. Provide three (3) copies of laminated, typewritten, legible programming charts for each controller. Charts shall show all stations on the controller, run times, start times for each individual program on the controller.

3.8 ELECTRICAL SERVICE

A. Electrical service shall be provided to control panel, as indicated on the plans. All work shall be in conformance to all local ordinances, codes, regulations and power company requirements. All cost for the electrical service is to be the responsibility of the Contractor.

3.9 TESTING

A. General: Unless otherwise directed, tests shall be witnessed by the Project Inspector. Work to be concealed shall not be covered until prescribed tests are made. Should any work be covered before such tests, the Contractor shall, at his expense, uncover, test and repair his work and that of other contractors to original conditions. Leaks and defects shown by tests shall be repaired and entire work re-tested. Tests may be made in sections, however, all connections between sections previously tested and new section must be included in the test.

B. Piping Upstream of Control Valves (Mainline): Maintain 100 PSI water pressure for a

duration of four (4) hours. There shall be no drop in pressure during test except that due to ambient temperature changes (+ 5PSI).

3.10 INSPECTION

A. Inspection of Work:
   1. Installation and operations must be approved by the Project Inspector.
   2. In no event shall the Contractor cover up or otherwise remove from view any work under this contract without prior approval of the Project Inspector. Any work covered prior to inspection shall be opened to view by the Contractor at his expense.

B. General Inspection: Periodic inspections shall be required for basic operations and installations during progression of the project. Such inspections will include but not necessarily be limited to the following items:
   1. Layout and flagging of sprinkler heads and system.
   2. Trenching.
   3. Wire placement.
   4. Partial fill compaction of trenches.
   5. Control valve installation.
   6. Irrigation controller installation and operation.
   7. Mainline sustained pressure check.

C. Coverage Test: When the irrigation system is completed, the Contractor in the presence of the Project Inspector shall perform a coverage test of water afforded in the planting and turf areas. The Contractor shall furnish all materials and labor required to correct any inadequacies of coverage disclosed. The Contractor shall inform the Project Inspector and the Landscape Architect of any deviation from the plan required due to wind, planting, soil, or site conditions that bear on proper coverage. If such corrections or additions are required in the irrigation system, the Contractor shall make all adjustments and corrections without any extra cost to the Owner.

D. Completion: The work will be accepted in writing when the entire project improvements have been completed satisfactorily to the Landscape Architect as stated in Section 32 93 00 Plants Part 3.7. In judging the work, no allowance for deviation from the original plans and specifications will be made unless already approved in writing at proper time. Should it become necessary, due to developed conditions, to occupy any portion of the work before the contract is fully completed, such occupancy shall not constitute acceptance. The Contractor will not be responsible for any damage caused by the Owner's work forces.

E. Submittal of Irrigation Equipment: When the Contractor desires to transfer the required irrigation equipment to the Project Inspector, he must submit along with the equipment an itemized list. The Contractor is solely responsible to obtain a written confirmation by the Project Inspector that all materials received by the Project Inspector matches his material list. Without any written confirmation will mean that no transfer of material has taken place.

3.11 MAINTENANCE

A. Adjustments: Irrigation system shall be maintained and adjusted as required to provide proper coverage throughout the 90 day maintenance period. Irrigation system maintenance shall commence

upon general inspection following irrigation installation, planting operations and general clean-up. Maintenance shall be continued until final acceptance.

B. After the system has been completed, the Contractor shall instruct an authorized representative of the Owner in the operations and maintenance of the system and shall set the desired controller irrigation time for each station.

3.12 GUARANTEE

A. The entire irrigation system shall be guaranteed by the Contractor to give satisfactory service and to the quality of materials equipment and workmanship including settling of backfilled areas below finish grade for a period of one (1) year following the date of the final acceptance of all the work by the Architect. If, within one year from the date of completion and final acceptance of all of the work, any trouble develops resulting from inferior or faulty materials or workmanship or settlement occurs and adjustments in pipes, valves, and heads, sod, or paving to the proper level of the permanent grades, the Contractor, as part of the work under his contract, shall make all adjustments and corrections without extra cost to the Owner, including the complete restoration of all damaged planting, paving, or other improvements of any kind.

B. The Owner reserves the right to make temporary repairs as necessary to keep the irrigation system equipment in operating condition. The exercise of this right by the Owner shall not relieve the Contractor of his responsibilities under the terms of the guarantee as herein specified.

C. Should any operational difficulties in connection with the irrigation system develop within the specified guarantee period which in the opinion of the Owner may be due to inferior material and/or workmanship, said difficulties shall be immediately corrected by the Contractor to the satisfaction of the Owner at no additional cost to the Owner including any and all other damage caused by such defects.

END OF SECTION

SPECIFICATION SECTION 32 8432
IRRIGATION BOOSTER PUMP
APPENDIX

SPECIFICATION SECTION 32 8432
IRRIGATION BOOSTER PUMP
APPENDIX

Watertronics
P.O. Box 530
Hartland, WI 53029
262-367-5000 PH
262-367-5551 FX

WATERTRONICS Rep: Phil Vangene Sales, tel: 925-250-5885, EM: pvangene@gte.net

WATERMAX 9000 SERIES DESIGN PROPOSAL

Booster Variable Speed Pumping System
U. L. Approved Package Pumping System Suitable For Three Phase Power

All Watertronics control panels meet or exceed the Federal Communications Commission (FCC) Standard #15 for emitted and conducted noise

Customer:	Boro L.A, Fresno, CA	**Date:**	October 15, 2018
Attn:	Rich Vaillancour	**Quotation #:**	101518RWE JHES-FUSD
Phone #:	559-266-4367	**Project Name:**	**Addams ES – FUSD**
Fax #:		**Location:**	Fresno, CA
Email:	rich-r_boro-comcast.net	**Quoted By:**	Rock Elgin
		Sales Email:	pvangene@gte.net

STATION PERFORMANCE: 280 **GPM @ 48 PSI boost** **Dynamic Inlet Pressure = 32 PSI**

POWER REQUIREMENT: **Power shall be 480 volt, 3 phase, 60 hertz.**

Note: See Power Supply in the Terms and Conditions Section below for further information.

MODEL DESCRIPTION: **WMBV-9000-2-15-480-3-280-80** (450gpm @ 80psi discharge)

- **Project Scope:** Prefabricated, self-contained, Variable speed, (VFD), **15 HP** horizontal centrifugal pump station with piping, valves, and enclosure. Controls will be an operator interface with software programming written specifically for this project. A formed and reinforced base platform and enclosure with lockable lid contains all manifolding, pumps, motors and control panels (disconnect mounted externally) to provide an integral unit ready for easy installation, anchored to a concrete pad. ***Full load amps = 41. Relay start configuration.*** **(1) 24 vac start relay (installer to provide a 24vac signal to Watertronics supplied pump start relay located in the pump station outer disconnect box).**

Note: This Proposal was formulated to meet the customer supplied design specifications. Watertronics is not responsible for meeting any specifications that were not presented prior to submitting this proposal.

STANDARD CONTROLS & EQUIPMENT INCLUDE:

- External mounted NEMA 3R main disconnect panel
- U.L listed control panel
- Multi-line operator interface display featuring:
  - Flow readout
  - Pressure readout
  - Flow totalizer
  - Elapsed run time display
- Alarm conditions with safety shutdown:
  - Low discharge pressure shutdown
  - High discharge pressure shutdown
  - VFD fault shutdown
  - High pump temperature shutdown
- Overload, single phase, phase imbalance/low voltage protection
- Surge protection for main station and solid state controls

- Variable Frequency Drive pressure regulation
- Stainless steel pressure transducer
- One (1) **25** HP, 3600 RPM horizontal centrifugal pump and EISA compliant ODP motor. Pump to be cast iron with a bronze impeller and mechanical seal.
- Silicone filled pressure gauges with isolation valve on suction and discharge piping
- Station discharge isolation valve
- Full flow by-pass piping with QTY (3) isolation valves inside station enclosure
- Baked and cured two part polyurethane ultraviolet insensitive paint
- Factory certified dynamic run testing of pump station up to full flow and pressure prior to shipment
- One operator and maintenance manual
- Access to Watertronics customer service technical phone support, technicians on call 24/7
- Access to Watertronics factory authorized service technician

ADDITIONAL EQUIPMENT & SERVICES INCLUDED WITH PUMP STATION:

- Forced fan air cooled ventilated **marine grade aluminum** pump station enclosure and **stainless steel** base, **unpainted**, with lockable access cover
- Internal Sound Dampening Material
- 6" Netafim Combination Hydrometer / Normally Open Master Valve
- Optical Isolator for sharing flow sensor
- Dead front external disconnect panel
- Surge protection for main station and solid state controls – mounted **inside** disconnect panel
- Vandal resistant red alarm light
- Input Line Reactor
- 120v 1ph Convenience Receptacle
- Watervision Cloud based remote monitoring w/ 5 year subscription package
- Five year limited warranty on mechanical and electrical components
- Two (2) Site Service Visits w/ in first year (one additional to start-up)

Local Start-Up by Watertronics (one trip - one day)	**Included**
Crane To Off-Load and Set Pump Station	Not Included
Domestic US Freight from Factory to Job Site: FOB Factory	**Included**

Shipment: A firm delivery date will be established and transmitted to purchaser when non-stocked material deliveries are confirmed. If no delays, estimated 5 weeks after receipt of signed submittal and drawing.

DELIVERY AND SET-UP: (installer responsibility)

1. All reasonable efforts will be made to meet the requested delivery date after the receipt of a signed submittal however; Watertronics will not be liable for delays in delivery.
2. Pump station components shipped separately from the station, at the Customer's request, may incur additional freight charges, payable by the Customer.
3. Customer will be responsible for having job site readily accessible for station delivery.
4. Customer will provide the equipment and personnel required to unload and/or set the pump station.
5. Station Set-up, if included, reflect one day on site
6. Customer will be responsible for electrical permit if required.
7. Customer will be responsible for primary electrical hookup to pump station.
8. Customer will be responsible for making all piping connections.
9. Customer will be responsible for building modifications if required for installation.
10. Customer will be responsible for wet well, slab, or concrete work.

START-UP: Contact - PUMP SERVICE NETWORK at Watertronics 262-367-1000

1. Start-up included: one trip - one day on site
2. Purchaser will notify Watertronics two weeks in advance of the desired start-up date.

WARRANTY:

1. Watertronics warrants its pump station products to be free of defects in materials and workmanship for a period of **five (5) years** from the date of startup, but not later than 60 (60) months from the date of invoice, unless modified by customer with the selection of the extended warranty option. Stations deemed delivery complete and invoiced accordingly, at Watertronics' factory and stored there, shall have the warranty period commence as of the invoice date. Should the system require storage before startup after leaving the Watertronics' facility, the system must be stored in a secured, climate controlled environment that will not allow for degradation of the system due to moisture, extreme temperature variations, or human negligence.
2. This warranty is limited to replacing or repairing any defective component supplied by Watertronics at Watertronics' sole discretion and does not apply to equipment that has been damaged, misapplied or has been modified in any way.
3. Any work performed on the pump station must be provided by a Watertronics recognized PSN (Pump Service Network) service provider and documentation of all work performed within the warranty period must be on file at the factory. Any maintenance or repairs done without the pre-authorization of Watertronics, or its recognized service providers shall void this warranty.
4. This warranty does not cover damages under the following conditions, unless otherwise specified in writing: (1) Misapplied or inappropriate incoming power, improper grounding, vandalism, or any incidental damage, consequential damage, or act of God, (2) repairs or replacements made without the pre-authorization of Watertronics, or its recognized service providers, (3) exposure to destructive gaseous or chemical solutions, (4) exposure to water pH levels of less than 6.0 which is typically the result of SO2 burner or sulfuric acid injection, (5) water salinity levels greater than 2000 parts per million, (6) water from a reverse osmosis process plant, (7) unusually high dirt load or abrasives in the water, or (8) pumping water not suitable for turf irrigation.
5. Watertronics will not accept liability for any costs associated with the removal or replacement of equipment in difficult to access locations. This includes, but is not limited to, the use of cranes larger than 15 tons, scuba divers, barges, helicopters, or other unusual means. These extraordinary costs shall be borne by the owner, regardless of the reason necessitating removal of the product from service.
6. THIS WARRANTY IS ABSOLUTELY IN LIEU OF ANY OTHER EXPRESS OR IMPLIED WARRANTIES. THIS INCLUDES ANY IMPLIED WARRANTY OF MERCHANTABILITY OR FITNESS FOR A PARTICULAR PURPOSE, AND OF ANY OTHER OBLIGATION ON THE PART OF WATERTRONICS.
   NO AGENT, EMPLOYEE OR REPRESENTATIVE OF WATERTRONICS HAS ANY AUTHORITY TO BIND WATERTRONICS TO AN AFFIRMATION, REPRESENTATION OR WARRANTY CONCERNING THE PRODUCT SOLD UNDER THIS WARRANTY. THERE ARE NO WARRANTIES WHICH EXTEND BEYOND THE DESCRIPTION ON THE FACE HEREOF.

Proper Storage: Should the system require storage before start up, it must be stored in a secured climate controlled environment that will not allow for degradation of the system due to moisture, extreme temperature variations, or human negligence.

POWER SUPPLY:

1. **The pump station proposed herein is designed for 480 volt, WYE configured or closed delta balanced 3 phase power. The acceptable range of voltage is 455 volts (min) – 495 volts (max). Unless specifically stated under Optional Equipment, open delta, phase converters, or other forms of unbalanced three phase power are not acceptable.**
2. If the supply voltage is not within this acceptable range, the purchaser is responsible for making the necessary corrections. This may include re-tapping or replacing the primary transformer. If the supply voltage is outside the stated range, electrical components such as VFD's, fuses, breakers, overloads, motors, power supplies may intermittently trip or prematurely fail and will not be considered for warranty coverage.
3. The use of generator power is not recommended. If a generator is required as a temporary power supply, the pump station will be covered under Watertronics' limited warranty provided that their "Engine Driven Generator Power Warranty Policy and Operation Guidelines" document is strictly adhered to.
4. Proper electrical grounding of the pump station is a requirement. Station will not operate properly and could pose a health hazard if not properly grounded. Failures of any magnitude due to improper grounding will not be covered under warranty.

CHANGE ORDERS:

1. Change Orders initiated by parties outside of Watertronics, after an order has been entered, may require additional charges to the purchaser regardless of the reason or initiating party. A minimum administrative fee of $ 150.00 will be charged.
   a. Lost engineering and order administration time will be charged to the purchaser at $150.00 per hour.
   b. Purchase orders to vendors perfected by Watertronics made invalid by the Change Order will incur charges against the purchaser equal to any penalties levied against Watertronics. To include, re-stocking charges, lost freight charges or return goods freight charges and any vendor administrative costs.
   c. Watertronics lost manufacturing time will be charged to the purchaser at $100.00 per hour. Additional labor to satisfy the Change Order will be estimated at $100.00 per hour and added to the total Change Order amount.
   d. Materials made unusable or scrapped because of the Change Order will be changed to the purchaser at actual sale value as originally assigned to the job.Replacement materials or goods will be valued as required by the Change Order and be shown in its total.

SECTION 32 93 00 - PLANTS

PART 1 - GENERAL

1.1 DESCRIPTION

A. Provide all material, labor, equipment and services necessary to do all Landscape Work and other related items necessary to complete the Project as indicated by the Contract Documents unless specifically excluded.

B. The landscape work includes, but is not necessarily limited to the following:

1. Fine grading, cross-ripping of compacted soil, soil preparation, topsoil and weed control.
2. Planting and staking as per drawings and specifications.
3. Tree hole boring for all trees on plan.
4. Turf sod and seed.
5. Ninety-day maintenance.
6. Root Barriers.
7. Decomposed Granite Surfacing.
8. Protective Cages

C. All other requirements appear in the following sections: Part 1, Part 2 and Part 3.

1.2 RELATED WORK SPECIFIED ELSEWHERE

32 84 32 – UNDERGROUND SPRINKLERS

A. Drawings and general provisions of the Contract, including General and Supplemental Conditions and Division 1 Specification Sections, apply to work of this section.

1.3 DEFINITIONS

A. The term "approved" shall mean by the Architect, and only in writing.

1.4 QUALITY ASSURANCE

A. Landscape work shall be performed by a single firm specializing in landscape work.

Plant measurements shall be as follows: 36” box size caliper shall be at least two and one half inches (2 ½”) in diameter, measured six inches (6”) from container soil level, 24" box size caliper shall be at least one and one half inches (1-1/2") in diameter, measured six inches (6") from container soil level, 15 gallon size caliper shall be at least three quarters inch (3/4") in diameter measured six inches (6") from container soil level. Where not shown, plants shall be of uniform, standard size, neither overgrown and root bound, nor too recently canned so that the root system is not thoroughly established through can. Pruning shall not be done prior to delivery except by prior approval.

B. Inspection:

1. All landscape work and materials shall comply with applicable Federal, State, County and City regulations. All plant material shall conform to State of California Grading Code of Nursery Stock, No. 1 grade for quality and size and also ISA Standards. Use only nursery grown stock.
2. All plant material shall be subject to inspection upon delivery to the project site by the Owner and Landscape Architect. Approval shall not limit the right of rejection during progress of the work for condition of the root ball, size, variety, latent defects or injuries. Rejected plants shall be removed from the site and replaced immediately by the Landscape Contractor at no additional cost to the Owner.

C. Qualifications of Workmen

1. Employ skilled workmen who are thoroughly trained experienced in landscaping and who are completely familiar with specified requirements and methods needed for proper performance of the work in this section.
2. Provide adequate supervision by a qualified foreman.

D. Soil Fertility Analysis

1. The Contractor shall provide, and pay for, a fertility analysis of the existing soil on the project site after rough grading operations have been completed, but before any top soil is imported and placed on site. The samples shall be collected for the fertility analysis by collecting a minimum of 10 representative samples of the soil throughout the site. Each sample shall be a minimum of .25 cubic foot each, and shall be thoroughly mixed together to prepare a homogenous 2.5 cubic foot sample. A one cubic foot sample shall be submitted to the soil testing laboratory as a representative sample for fertility analysis. The Contractor shall submit to the Landscape Architect for review, the results of the soil testing investigations before proceeding with any soil improvement activities such as fertilizing, and/or adding of amendments.
2. Recommendations for improvement of the soil conditions for plant growth shall be made by the testing laboratory, and at a minimum, shall include the following:
   a. A fertilizer and amendment application program (including macro and micro nutrients).
   b. Treatments to improve soil PH for optimum plant growth.

E. Bidding Allowance

1. The Contractor shall prepare his bid for the project based upon the type and quantities of soil amendment and fertilizer specified herein. The Contractor's bid price shall also include a $8,000.00 bidding allowance for additional work and amendments / fertilizer required by the Owner to be provided for the project after review of the fertility analysis. If the soil analysis reveals that the amendment program is sufficient and does not need altering the Contractor shall credit back the Owner the full bidding allowance. If a minor amendment adjustment is made and the Owner considers the change has a value less than the bidding allowance amount the Contractor shall provide a credit to the Owner for a portion of the bidding allowance in the amount agreed upon by the Contractor and Owner.

1.5 SUBMITTALS

A. Submit six (6) copies of:

1. A complete materials list of all items proposed to be furnished.
2. Certificates of inspection as may be required by government agencies (providing duplicate copies for the Architect).

B. Maintenance Instructions: Submit two (2) copies typewritten instructions recommending

procedures to be established by the Owner for maintenance of landscape work of one full year. Submit prior to 90 day maintenance period. Maintenance instructions shall be a bound manual.

1. Maintenance Instruction shall include the following:
   a. Detailed chart, graph or written description of monthly maintenance procedures for turf, shrubs and trees specific to the types called to be provided.
   b. Description shall include detailed directions for pruning, fertilizing, pest and disease control for shrubs and trees; directions for fertilizing, pest and disease control, mowing, pre-emergent and post-emergent herbicide applications for turf.

C. Soil amendment: Submit one (1) pint sample and analysis of soil amendment and mulch.

D. Samples: When requested by the Owner.

E. Submit invoices from material suppliers for all amendments, fertilizer, seed, plants, mulch and any other materials provided for the landscape installation to the Landscape Architect. Contractor shall submit invoices at any stage of installation as requested by the Landscape Architect.

1.6 AVAILABILITY

A. The Landscape Contractor shall confirm availability of plants, supplies, and materials prior to submitting his landscape bid. Variety substitutions are not desired.

B. If a plant is found not to be available, the Landscape Contractor is to notify the Landscape Architect before bidding. The Landscape Architect will then select a reasonable alternate and inform all those bidding of the availability of the original plant. If a substitute is selected it must be of the same size, value and quality as the original plant. Failure to inform the Landscape Architect of unavailable plants prior to bidding will result in assumption that all plants specified will be provided by the Landscape Contractor at time of installation. No substitution will be allowed after award of contract.

C. Plant size listed on construction documents are minimum acceptable sizes. If plant material specified is not substituted prior to award of contract the minimum specified size shall be provided by the Contractor. If the Contractor can not provide the minimum specified size plant material at the time of installation, the Contractor shall be required to install a larger sized container of the plant specified at no additional cost to the Owner.

1.7 PROJECT CONDITIONS

A. Existing Conditions
   1. The Landscape Contractor is to visit the job site to verify existing conditions including soils, vegetative growth, existing grade, subsurface conditions, drainage, etc. making allowances in his bid for any required work to provide the landscape installation as specified in the construction documents.
   2. The Landscape Contractor shall notify the General Contractor to locate underground lines prior to hole boring or trenching. Do not permit heavy equipment such as trucks, rollers, or tractors to damage utilities. Hand excavate as required to minimize possibility of damage to underground utilities. Maintain grade

stakes set by others until removal is mutually agreed upon by all parties concerned. Prevent damage to temporary risers of underground irrigation system and similar obstructing work located in the landscape areas.

3. If there is a conflict with the utilities and the planting, Contractor shall notify the Owner for instructions as to further action. Failure to do so will make Contractor liable for any and all damages thereto arising from his operation.

B. Environmental Requirements

1. No plants shall be planted in situations that show obvious poor drainage. Such situations shall be corrected by the Landscape Contractor as directed by the Landscape Architect and the Owner. Corrections shall be provided by the Landscape Contractor at no additional cost to the Owner.

C. Protection

1. The Landscape Contractor shall guarantee repair of damage to any part of the premises resulting from leaks, defects in materials, equipment or workmanship. The Landscape Contractor shall be liable for any and all accidents resulting from his work, including open holes and trenches during construction.
2. During landscape work, store materials and equipment where directed. Keep pavements clean and work area in an orderly condition.
3. Protect landscape work from theft, loss, damage and deterioration during storage, installation and maintenance periods. Protect from unauthorized persons (trespassers) as well as from operations by other contractors and tradesmen, and landscape operations. Protect all planted turf and shrub areas from persons as well as operations of other contractors and the Owner. Cost for protection shall be borne by the Contractor. Means of protection such as temporary fencing shall be approved by the Owner.
4. Contractor shall repair or restore damaged work as identified by the Landscape Architect to an acceptable condition. No additional payment will be made to the Contractor for repair of unprotected material.

1.8 INSPECTION

A. Periodic inspections will be made by the, Landscape Architect during the installation for the project. Such inspections will include but not necessarily be limited to:

1. Stockpiled imported soil and soil amendments prior to installation.
2. Weed control operations prior to other portions of work.
3. Placement of plant material at the site prior to planting.
4. Condition of plant material prior to placement.
5. Auguring, digging and preparation of plant pits for trees and shrubs.
6. Planting and staking of trees.
7. Planting of shrubs and ground cover.

B. Any corrective action called for by any of the above listed authorities shall be immediately performed by the Contractor.

1.9 PRODUCT DELIVERY, STORAGE AND HANDLING

A. Plant label shall identify each specie and variety. A label shall be attached to each individual plant or block of identical plants grouped together.

B. Adequately protect plants from sun and wind prior to planting. Do not allow stored plant

material to dry out at any time.

PART 2 - PRODUCTS

2.1 MATERIALS

A. Soil Amendment

1. Turf and Planting Areas: “Harvest Premium” as supplied by Waste Management Fresno, CA (559) 753-0040 or equivalent and conforming to the following:
   a. Derivative material – 50% composted / decomposed, shredded, chipped greenwaste organic matter and 50% composted dairy manure.
   b. Particle size - 3/8".
   c. PH Value - 5.9/6.7.
   d. Macro-nutrients – 1.5% Nitrogen, 0.64% Phosphorus, 1.6% Potassium.
   e. Moisture holding capacity - 4 times by volume.
   f. Composted to provide carbon: nitrogen ratio -11:1 to 13:1 maximum.
   g. Salinity / Cation Exchange -13% / 541%.
2. Turf and Planting Areas: Super Cal 75 gypsum as supplied by Waste Management Fresno, CA (559) 753-0040. Gypsum shall be mined gypsum composed of no less than 75% pure CAS042H20 hydrated calcium sulfate or equivalent.
3. Turf and Planting Areas: Tri-C Enterprises P. O. Box 1367, Chino, CA 91708-1367 (800) 927-3311. Tri-C Humate containing 40% Humic Acid per CDFA testing method derived Leonardite or equivalent.
4. Turf and Planting Areas: Tri-C Enterprises P. O. Box 1367, Chino, CA 91708-1367 (800) 927-3311. Tri-C Endo 120 Mycorrhizae containing 60,000 living propagules of glomus intraradices per one pound, or equivalent.
5. Turf and Planting Areas: Soil Sulfur as supplied by Wilbur / Ellis (559) 442-1220, or equivalent.
6. Turf and Planting Areas: Quantum Growth, Quantum Light and Quantum Revive liquid organic soil amendments as supplied by Agro Natural Sciences, 352 West Bedford, Suite112, Fresno, CA. (866) 571-3277, or equivalent.
7. Turf and Planting Areas: Ferrous Sulfate 20% and Manganese Sulfate 31% as supplied by Wilbur / Ellis (559) 442-1220, or equivalent.

B. Imported Topsoil

1. Clean, friable, sandy loam with no noxious weeds, clods, or other extraneous material.
2. The Owner reserves the right to take samples of imported topsoil have tested at Contractor's expense, and reject topsoil as deemed necessary.
3. Particle size distribution.
   a. Minimum 95% passing a 25.4 mm screen.
   b. Minimum 85% passing a 9.5 mm screen.
   c. Fraction passing a 9.5 mm screen shall contain a minimum of 15%, maximum 40% total stilt and clay.
4. Agricultural Suitability:
   a. Salinity (exec 103) less than 4.0 at 25 degrees centigrade.
   b. Sodium absorption ration (SAR) less than 10.

c. Boron in saturation extract less than 1.0 PPM.

C. Fertilizer

1. Trees and Shrubs:
   a. Fertilizer for all trees and shrubs to be Best-Paks (20-10-5) with Polyon by Simplot Turf (800) 992-6066 or equivalent. The Best-Pak tablets shall be applied at the following rates:

1 Gallon Can	-	1 Paks
5 Gallon Can	-	3 Paks
15 Gallon Can	-	9 Paks
24" Boxes	-	18 Paks
36” Boxes	-	24 Paks

2. Turf:
   a. The pre-plant fertilizer shall be commercial fertilizer Best (12-12-12) or equivalent.
   b. The post-plant fertilizer shall be commercial fertilizer Best Triple Pro (15-15-15) with
   minors or equivalent.

D. Mulch

1. Shredded cedar or redwood bark ‘Gorilla Hair’, free of sticks, dirt, dust and other debris, as provided by Allyn Goodall Trucking (559) 233-4120 or equivalent and accepted by Landscape Architect.
2. Particle size: 3/4” to 1 1/2" in general size.

E. Staking Material

1. 2 inch diameter lodgepole pine, pressure treated, pointed one end.
2. V.I.T. Cinch Tie, 32 inches long, V.I.T. Products, Inc. (619) 673-1760 or equivalent.

F. Plants

1. Plants shall be typical of their species and variety, shall have normal growth habits, well developed branches and be densely foliated, and shall have fibrous root systems. No substitutions will be allowed unless approved in writing by the Landscape Architect.
2. Plants shall be free from defects and injuries including disease, insects, insect eggs and larvae and girdled roots.
3. Quality and size of plants, spread or roots, caliper and size of balls shall be in accordance with ANSI Z60.1-1969, "American Standard for Nursery Stock".
4. Plants shall not be pruned before planting.
5. Plant material must be selected from nurseries that have been inspected by State or Federal Agencies.
6. Plants shall be nursery grown and shall have been transplanted or root pruned at least once in the past three (3) years. Plants shall have been grown under climatic conditions similar to those in the locality of the project.
7. Each bundle of plants shall be properly identified by weatherproof labels securely attached thereto before delivery to the project site. Label shall identify plant by name.
8. Nomenclature shall be in accordance with Hortus III.
9. No plants shall be delivered to the project site, except for required samples, until inspection has been made in the field or at the nursery, or unless specifically authorized in writing by the Landscape Architect.

10. Collected plant material may be used only when approved. Approval shall not limit the right of rejection during work progress for conditions of the root ball, latent defects or injuries.
11. Where shown as "MULTI" provide trees with branching starting close to the ground in the manner of a shrub.
12. Plants are listed on the planting plan as the minimum acceptable sizes. The quantities listed are the Landscape Architect's estimate only. The Landscape Contractor is responsible for all material shown on the plan.

G. Turf Sod / Seed:

1. Sod / Seed shall be fresh and labeled in accordance with U. S. Department of Agriculture Rules and Regulations under the Federal Seed Act.

2. The type one turf shall be ‘Celebration’ hybrid Bermuda grass wide roll sod as supplied by AG Sod (800) 800-8483, no known equal.

3. The type two turf shall be ‘Panam’ hulled seeded blend of varieties of common Bermuda grass as supplied by Barenbrug (800) 547-4101, or equivalent.

H. Tree Trunk Protector:

1. Arbor Guard polyethylene tree guard, (8" min. tall) or equivalent.

I. Root Barrier

1. Deep Root Corporation #UB 24 PANEL, (714) 898-0563 or equivalent.

J. Protective Cages

1. Tensar BX1200 polyethylene Geogrid or equivalent as manufactured by the Tensar Corporation (800) 845-453 and as supplied by Basalite Keystone (800) 350-5866 or equivalent.

K. Decomposed Granite Surfacing:

1. ¼” to fine chipped angular stone. Color to be light gold / beige, “Califonia Gold” as distributed by Rosenbalm Rockery, Inc. (559) 256-3900. Finish depth of material shall be 3” deep after compacting to a minimum of 85%. Submit sample of granite and source for review before purchasing and delivery to the job site.
2. Filter Fabric shall be three (3) ounce weight Spunbond Polypropylene professional landscape fabric as supplied by Fabri Scape (708) 728-7180 or equivalent.

L. Organic “Stabilizer”

1. Organic, non toxic, colorless, odorless organic binder derived from natural sources of Psylium as distributed by Rosenbalm Rockery Inc. (559) 256-3900, and known as “Stabilizer”, or approved equal. “Stabilizer” shall be applied to the decomposed granite areas as designated on the plans which will receive the organic” Stabilizer”.
2. Blend 12 lbs. of “Stabilizer” per ton (2,000 lbs.) of decomposed granite per manufacturer’s recommendations to stabilize subject surfacing to a depth of no less than two (2) inches below finish grade. The decomposed granite areas shown to receive the “Stabilizer” shall be graded, prepared, mixed, wetted, and finished as further recommended by the manufacturer of the stabilizer so that the granite is uniformly hardened and the particles bound tightly together. Decomposed Granite areas shall be uniformly level, compacted and brought to smooth level finish.

Decomposed granite areas which are crusted over and/or loosely compacted will be considered unacceptable by the Owner.

M. Other Materials

1. Materials not specifically indicated, but necessary for proper execution of the work, shall be of first quality as selected by the Contractor subject to approval of Landscape Architect.

2. Deliver packaged materials in containers showing weight, analysis, and name of manufacturer. Protect materials from deterioration during delivery and while stored at the site.

PART 3 - EXECUTION

3.1 INSPECTION

A. Examine the area and conditions under which the work in this section is to be performed. Correct conditions detrimental to the timely and proper completion of the work. Do not proceed until unsatisfactory conditions have been corrected.

3.2 ROUGH GRADING/SOIL COMPACTION

A. Rough grading has been performed by others to the extent of establishing drainage patterns. The Contractor is responsible for placement of topsoil and rough grading required to ensure positive drainage in all turf and planting areas. Rough grading shall accommodate the addition of soil amendments in anticipation of proposed finish grades.

B. During the course of earth work required in the project, compaction of soil in the turf and planting areas will exceed an acceptable density. The Landscape Contractor is required to cross rip and cultivate (break up large clumps and clods) the soil within these areas so the soil is loose and friable. Ripping shall be to a depth of twelve inches (12") and shall be accomplished by approved means and methods as directed by the District. The Landscape Contractor shall review the completed ripping operation with the Landscape Architect to determine compliance. The Contractor shall provide additional work as directed by the after review.

C. Do not work soil when moisture content is so great that excessive compaction will occur, nor when it is so dry that dust will form in air or that clods will not break readily. Apply water, if necessary, to bring soil to an optimum moisture content for tilling and planting. Maintain within 2 percent above or below optimum moisture content for soil type present at all times during the work.

D. The soil shall be cleared of all construction materials, concrete, stones, rocks, roots, wire, sticks, foreign material and similar objects larger than one half inch (1/2") in general size .

E. Spread approved type topsoil over accepted subgrade prior to incorporating amendments. Add topsoil where needed to bring grade to required elevation as referenced on the plans and specifications.

3.3 SOIL PREPARATION

A. Throughout the entire project duration and before commencement of any soil preparation, all existing grasses and weeds on the site shall be killed by application of herbicide. All dead vegetation shall be removed from the site and disposed of in a lawful manner. The Contractor shall use and apply all weed control chemicals in accordance with the manufacturer's recommendations and all local codes and ordinances. The chemicals applied shall be done by a licensed applicator.

B. Amend soil in turf area and planting areas per the following:

1. Turf and Planting Area
   a. Apply "Harvest Premium" at a rate of two (2) tons (4,000 pounds) per 1,000 square feet. Incorporate into soil to a depth of six inches (6") prior to finish grading.
   b. Super Cal 75 gypsum shall be applied at a rate of 200 pounds per 1,000 square feet. Incorporate into soil to a depth of six inches (6") prior to finish grading.
   c. Tri-C Humate shall be applied at a rate of thirty-five (35) pounds per 1,000 square feet. Incorporate into soil to a depth of six inches (6") prior to finish grade.
   d. Tri-C Endo 120 Mycorrhizae shall be applied at a rate of one and one half (1 ½) pounds per 1,000 square feet. Incorporate into soil to a depth of six inches (6") prior to finish grading.
   e. Quantum Light and Quantum Revive shall be applied at a rate of (1) gallon per acre for each product. Apply prior to installing sod, seed and shrubs / ground cover after fine grade is accepted in all turf areas and planting areas.
   f. Soil Sulfur shall be applied at a rate of fifty (50) pounds per acre. Incorporate into soil to a depth of six inches (6") prior to finish grading in new turf areas and planting areas.
   g. Ferrous Sulfate 20% shall be applied at a rate of one hundred (100) pounds per acre. Incorporate into soil to a depth of six inches (6") prior to finish grading in turf areas and planting areas.
   h. Manganese Sulfate 31% shall be applied at a rate of fifty (50) pounds per acre. Incorporate into soil to a depth of six inches (6") prior to finish grading in new turf areas and planting areas.
   i. Pre-plant fertilizer shall be applied at a rate of five (5) pounds per 1,000 square feet. Apply to turf bed only prior to installing seed and after fine grade is accepted.

C. Planting pits, prior to planting trees and shrubs mix 50% native soil and 50% "Harvest Premium" as backfill mix.

D. Pre blended soil amendments will not be accepted. The Contractor shall provide soil amendments in individual containers delivered to the site separately and identified by the manufacturer’s product label.

3.4 FINE GRADING

A. Upon completion of soil preparation, grade all planting and turf areas to smooth and even slope reestablishing drainage patterns. Grading shall eliminate all humps and hollows and promote positive drainage in all planting and turf areas.

B. Tolerance of grade differential shall be plus or minus 0.05 foot from design elevation. The Contractor shall water test all turf and planting areas after the grading operations are completed in the presence of the Landscape Architect. The water test shall consist of applying water to the turf and planting areas to the point where water runs over the soil to show the drainage pattern. Make all corrections to the grading as required by the Landscape Architect and certify that fine grading has re-established drainage patterns. Submit written certification of grade to the Landscape Architect. Certification shall be approved in writing by the Landscape Architect prior to proceeding with planting.

C. During the finish grading process no relative compaction of the soil in turf and planting areas shall exceed 85% relative density. The reserves the right to require the Contractor to test for over compaction. The first test will be paid for by the Owner, all subsequent testing will be paid for by the Contractor.

D. Finish grades shall be one half inch (½") for turf areas, and two inches (2") for planting areas, below all walks and curbs.

3.5 WEED CONTROL

A. The Contractor shall treat all proposed turf and planting areas with a post emergent contact systemic herbicide weed killer at manufacturer's approved rates prior to any commencement of work at the site. Desiccated and dead weed growth shall then be removed from the entire project site by scraping the vegetation growth off of the existing dirt. Dispose of removed vegetation matter lawfully. Disking in of vegetative material is not acceptable.

B. Weed eradication shall be ongoing from first day of project work, throughout the course of the project life and continue until final acceptance of the entire project. The Contractor shall apply a post-emergent systemic herbicide contact weed killer to eradicate all weeds throughout the project life up to and throughout the 90 day maintenance period for all areas of the project site. This includes but is not necessarily limited to open dirt areas, parking lots, concrete paving areas, etc. At no time will weeds be allowed to become established. Contractor shall provide all weed control operations as directed by the District.

3.6 PLANTING

A. Planting Procedures

1. Planting shall be performed by workmen familiar with planting procedures and under the supervision of a qualified foreman. The planting foreman shall be on the job site at all times when planting is in progress.
2. Planting operations shall not occur under unfavorable weather conditions.
3. Large trees shall be planted first. Shrub planting shall be completed before groundcover is planted.
4. Proceed and complete the landscape work as rapidly as portions of the site become available, working within the seasonal limitations for each kind of landscape work required.

5. Cooperate with other contractors and trades working in and adjacent to the landscape work areas. Examine drawings which show the development of the entire site and become familiar with the scope of other work required.

B. Planting Preparation and Operations

1. Planting material shall be provided with adequate protection of root systems and balls from drying winds and sun. Do not bend or bind trees or shrubs in such a manner as to damage bark, break or destroy natural shape. Provide protective covering during delivery.
2. Deliver trees and shrubs after preparations for planting have been completed, and plant immediately .If planting is delayed more than six (6) hours after delivery, set trees and shrubs in shade, protect from weather and mechanical damage and keep roots moist. Do not remove container grown stock from containers until planting time.
3. All planting areas shall be smooth and even. Finish grades shall be established as indicated on the plans. Approval of shall be secured before digging of holes.
4. Place all trees and shrubs in locations shown on the planting plan and obtain written field approval of the before planting or digging planting pits. Inform the seven (7) days prior to placing the plants.
5. Carefully remove all canned stock from containers with tin snips or approved cutter. After removing plant from container, scarify the sides of the rootball to a depth of 1 inch at four to six equally spaced locations around the perimeter of the ball or at 12 inch intervals on sides of boxed materials. Cut and remove circling roots over 3/8 inch diameter.
6. Excavate holes of circular outline with vertical sides for all plants. The vertical sides and bottom of the holes shall be thoroughly scarified to promote union of backfill with existing soils. All trees shall be installed with drainage holes. Prior to drilling drainage holes, Contractor shall “pothole” each tree hole boring location to verify there are no underground obstructions or utilities. The drainage hole shall be drilled with a twenty-four inch (24") diameter auger penetrating soil layers to sand or to a minimum depth of six (6) feet but in no case further than ten (10) feet. Precautions shall be exercised to avoid smooth sides on the holes. Offset augured hole eighteen inches (18") from the center of the planned tree location to avoid settling of tree after planting.
7. The Contractor shall test plant holes for drainage by flooding with water. If the water does not drain out within two (2) hours, excavating shall be carried down as required to achieve such drainage by breaking through the hardpan layer. In no case further than ten feet (10’).
8. Tree and shrub holes shall be at least twice the width and depth of the plant container.
9. Set each plant in the center of the hole, plumb and straight. Set the crown of the plant at one inch (1") above finish grade (after settling). When ½ of the backfill mix has been placed, tamp-in, insert fertilizer and allow no air pockets as remainder of backfill is added.
10. Compact soil around the rootball of all plants and water in thoroughly.
11. Excess soil from plant holes shall be cultivated and raked to a smooth outline.
12. Shrubs and groundcovers shall be installed in relation to walks and paving to allow for future growth without obstructing traffic.
13. All plants shall be set in watering basin which shall be four feet (4’) in diameter and three inches (3") deep for trees and two feet (2') in diameter and three inches (3") deep for shrubs and vines. Remove watering basins at end of maintenance.
14. Ground cover plants shall be planted at the spacing noted on the drawings in a triangular pattern. Not more than one hour shall elapse from the time any groundcover plant is planted until it is watered.

15. Upon completion of planting, the Landscape Contractor shall top dress the entire planting area with three inch (3") mulch and treat area with pre-emergent at a rate recommended by the manufacturer. Contractor shall coordinate application with the Landscape Architect and provide certificates of application to Landscape Architect. Provide one final application of pre-emergent seven (7) days prior to final acceptance.

C. Pruning

1. Prune plants in accordance with established horticultural practice and only when necessary. Shearing of any plants will not be acceptable.

D. Tree Staking:

1. Trees shall be supported by three (3) tree stakes, unless otherwise noted.
2. Stake shall be set firmly in the ground on the northwest side of the plant, and equally space others around tree.
3. Trees shall be tied to upright stakes loosely with Tree Ties (see planting detail).

E. Root Barrier

1. Install root barrier per planting details.

F. Arbor Guard

1. Install Arbor Guard as per manufacturer's recommendation.

G. Protective Cage

1. After tree stakes are set and ties are secured, install polyethylene mesh cage.

2. Cut mesh flush to grid joint to form circular cage, avoid sharp edges and secure circular form with plastic zip tie fasteners at 8" O.C. Fasten cage to tree stake with 2" crown X ¾ " leg staple at 8" O.C.

H. Decomposed Granite Surfacing

1. Place decomposed granite after mixing in “Stabilizer” over compacted subgrade and filter fabric in areas designated on plans. Add light application of water to moisten material and roll to compact to 85% relative density. Provide smooth grade to drain.

I. Turf

1. The area to be planted shall be finish graded to present a smooth and even surface free of humps and hollows and conforming to the grading plans. Immediately prior to planting, the surface of the area to be planted shall be sufficiently loose and friable to receive the turf.

2. The minimum application rate for the Type Two turf shall be eight (8) pounds per 1000 square feet for the ‘Panam’ Bermuda grass.

   The Type One turf sodded grass variety to be planted shall be ‘Celebration’ variety of improved hybrid Bermuda grass.

3. Type Two Turf Seed Planting

All weed control shall have been performed prior to turf application as specified previously in these Specifications.

Hydroseeding is an approved method of planting hybrid Bermuda grass. Hydroseeding is the mixture of a prepared wood mulch, seed, water, mulch binder and fertilizer sprayed through a hose onto a prepared turf bed. The site preparation needed for Hydroseeding is the same as stated previously.

Hydraulic equipment used for the application of the fertilizer, seed and slurry of prepared wood mulch shall be of the "Super Hydroseeded" type. The equipment shall have a built-in agitation system and operating capacity sufficient to agitate, suspend and homogeneously mix a slurry.

The slurry distribution lines shall be large enough to prevent stoppage and shall be equipped with a set of hydraulic spray nozzles which will provide a continuous non-fluctuating discharge. The slurry tank shall have a minimum capacity of 1,000 gallons and shall be mounted on a traveling unit, either self-propelled of drawn by a separate unit, which will place the slurry tank and spray nozzle within sufficient proximity to the areas to be seeded.

The slurry preparation shall take place at the site of work and shall begin by adding water to the tank when the engine is at half throttle. When the water level has reached the height of the agitator shaft, good recirculation shall be established and at this time the seed shall be added. The seed shall be of quality and mixture as previously specified.

The engine throttle shall be opened to full speed when the tank is filled with water. All the pulp mulch shall be added by the time the tank is tow-thirds to three-fourths full. Spraying shall commence immediately when the tank is full.

Application rate of hydroseeding as follows:

Paper Mulch	=	35 lbs/1,000 sq.ft.
Seed	=	as specified
Mulch Binder (Mulch Tackifier)	=	2 lbs/1,000 sq. ft.

4. Turf Sod Planting

Moisten prepared surface immediately prior to laying sod.
Lay sod same day as delivery to prevent deterioration.
Lay sod tight with no open joints visible, and no overlapping; stagger end joints 12 inches minimum as in laying bricks. Do not stretch or overlap sod pieces.
Lay smooth. Place sod so that final grade will match adjacent areas.
Water lightly the sodded areas immediately after installation.
After all sod is laid, roll sodded areas with 300 pound vibrating roller to provide good bond between sod and soil and to remove minor depressions and irregularities. Roller shall not leave any marks on sod. Immediately following installation, the soil should be moistened as much as necessary to keep it squishy wet. Avoid traffic on the new sodded areas until after first mowing.

5. The Contractor shall take note that the District's allowable planting window for Bermuda grass extends from May 1 to August 15 each year. If the contractor is unable to plant the specified Bermuda grass turf variety within the allowable time period, he will then be required to come back the next following year to establish the specified turf variety. All additional costs associated with the call back to establish the specified turf variety shall be borne by the Contractor with no additional compensation. It is the Contractor's responsibility to schedule his work to meet the required planting schedule. This requirement does not affect the Type One turf as it is expected that the Contractor will be able to establish the Type One turf. The type One turf shall be provided overseeded with annual ryegrass in the event the Contractor is unable to install the Type One turf between May 1 and August 15. If the Contractor is unable to establish the specified Type Two turf variety he will then be required to provide and establish an interim stand of turf in all of the Type Two turf areas. The contractor shall provide and plant five (5) pounds per 1,000 square feet of Annual Ryegrass as interim to specified variety in all the turf areas. All costs associated with the Ryegrass establishment shall be borne by the Contractor with no additional compensation.

At the onset of the callback work to establish the specified Type Two Bermuda grass and prior to planting the Bermuda grass, all of the interim stand of annual ryegrass shall be fully eradicated by the use of herbicide as approved by the District. The dead ryegrass shall be removed from all of the turf areas so that the turf area dirt is fully exposed with no vegetative cover. All weeds present shall be eradicated at this time and removed from the project site.

The Contractor shall then proceed with establishing the Bermuda grass seed. Provide a smooth, even, friable turf bed prior to seeding. Fine grade the entire turf areas to ensure that all humps and hollows are eliminated and drainage pattern meets the project grading plans. The Contractor may be required to water test the turf areas for drainage with visual inspection by the District. Eradicate weeds and scarify top one half inch (1/2") of bed in turf areas after fine grading. Bermuda grass seed should then be applied as required in paragraph 32 93 00, 3.06-H of these specifications. The Contractor shall ensure that the specified materials are provided and submit all invoices for materials applied to the Project Inspector. Upon completion of the seeding the Contractor shall begin a ninety (90) calendar day maintenance period as required in Section 32 93 00, 3.09 of these specifications. The Contractor shall continue maintenance of the turf area until accepted by the District.

6. After acceptance by the inspector of the planting operations, the Contractor shall apply water, by means of a gentle spray, to make all planted areas moist, but not flooded.

The areas shall not be watered to the extent of saturating the soil and causing "flotation" or "flowing" of the top surface of the soil. After water has once been applied, no portion of the planted areas shall be allowed to dry out during the entire maintenance period. The Contractor shall be responsible to monitor the site and alter the watering times and frequencies to meet site conditions.

3.7 CLEAN-UP

A. All areas shall be maintained in a neat and orderly condition at all times. All reasonable precautions shall be taken to avoid damage to existing planting and structures.

B. Damaged areas shall be restored to their original condition.

C. After the planting operations are completed, the Landscape Contractor shall remove all trash, excess soil, tree protection barriers, empty containers or any other debris accumulated by the work from the site. All damage caused by the work shall be repaired at the Contractor's expense and the ground shall be left in a neat and orderly condition to the satisfaction of the Landscape Architect.

3.8 GENERAL INSPECTION

A. A general inspection will be held upon conclusion of the planting operations, irrigation system installation and after clean-up has occurred. The Owner shall be informed in writing a minimum of seven (7) working days prior to the time the work is ready for inspection in order to arrange a suitable time and date for such inspection.

B. At the time of inspection, Contractor shall have all planting areas free of weeds and neatly cultivated and top dressed with mulch. All plant basins shall be in good repair. All trees shall be properly staked.

C. Work requiring corrective action or replacement in the judgment of the District shall be performed within five (5) days after the inspection. Corrective work and materials replacement shall be in accordance with the drawings and specifications and shall be made by the Contractor at no cost to the Owner. A subsequent inspection shall then be arranged.

D. If, after the inspection, the Owner is of the opinion that all the work has been performed as per drawings and specifications, the Contractor will be given written notice of substantial completion.

3.9 MAINTENANCE

A. The Contractor shall continuously maintain all areas included in the contract during the progress of the work, through the establishment period and until final acceptance of the work.

Maintenance work includes monitoring the site to control all watering, replanting, fertilizing, mulching, cultivating and mowing necessary to bring the planted areas to a healthy growing condition, and any additional work needed to keep the areas neat, edged and attractive. Any date when the Contractor fails to adequately water, replace unsuitable planted areas and other work determined to be necessary by the District, will NOT be credited as part of the Maintenance Period.

B. The maintenance period shall commence immediately following the first mowing cycle for the type two turf grass and continues for a minimum period of ninety (90) calendar days as specified in these Specifications. No additional payment will be made for additional time necessary for maintenance and plant establishment required by the Owner.

C. During the progress of the maintenance period, the Contractor and the District shall conduct inspections at no less than 30 day intervals to determine that ongoing maintenance activities have been conducted by the Contractor. If in the opinion of the District, ongoing maintenance has not been conducted by the Contractor in a satisfactory manner the maintenance period shall be suspended. The Contractor shall provide remedial work as directed by the District to correct the found deficiencies and schedule another inspection. If after the reinspection the work is deemed acceptable the maintenance period shall resume.

D. The first mowing of turf shall not commence until the grass is generally at least one and one half inches (1-1/2") in height. For the first mowing and all subsequent mowing's for the turf, the mower shall be set to cut at a height of one inch (1"). The turf shall be maintained by mowing and edging at least once every seven (7) calendar days after the initial mowing. The Contractor shall mow the site a minimum of ten (10) times. The turf shall be mowed and edged prior to final inspection.

Between the fifteenth (15th) day and the twentieth (20th) day of the maintenance period the Contractor shall replant the spots or areas in which normal growth of the turf is not evident. The Contractor shall do the following: replant all spots or areas where normal growth is not evident; remove all rocks or other debris that would constitute a hindrance to mowing; repair all damaged done by his operations; fill all depressions and eroded channels with sufficient sandy loam top soil to raise to proper grade, compact lightly and replant the filled areas; and roll all planted and replanted areas with a one hundred twenty-five (125) pound weight roller to compact the soil around the seed and to provide a smooth and even mowing surface.

The Contractor shall fertilize the planted turf area every three weeks with (15-15-15) fertilizer with minors at a rate of 5 lbs. /1,000 sq. ft. The Contractor shall continue the fertilizer application until the planted turf is accepted.

At no time will broadleaf and annual weeds be allowed to become established in the turf. At the earliest time possible the Contractor shall eradicate all weeds in the turf area by application of herbicides and/or mechanical or hand labor means. The Contractor shall not proceed with any weed eradication without the written consent of the District.

E. A final inspection of the turf and planting areas shall be made by the District in the presence of the Contractor at the end of the ninety (90) day maintenance period to determine if the planted areas are well established and healthy throughout the entire site. If the areas are determined by the Owner as being unacceptable, the maintenance period will be extended to such time as the areas are brought up to the acceptable level.

F. All trees, shrubs, ground cover shall be kept at a optimum growing condition by watering, weeding, replanting, fertilizing, cultivating, tree stake repair, spraying for diseases and insects, replace dead or dying materials, pruning as directed, maintaining proper grades of plants, and providing any other reasonable operations of maintenance and protection required for successful completion of the project.

G. The Contractor shall be responsible to replace all loss of plants due to theft, vandalism or any other causes till final acceptance of the work by the District.

3.10 FINAL ACCEPTANCE

A. Final inspection will be made at the end of the maintenance period, provided all deficiencies brought out during that time have been corrected. If these deficiencies have not been corrected by the end of the stated maintenance period, the Contractor shall continue to maintain the project at his own expense beyond the specified time. When all deficiencies have been corrected, the final inspection will be held with the Project Inspector, and Contractor.

B. If, after the final inspection, the owner is of the opinion that the work is acceptable, the Contractor will be given written acceptance of the project.

3.11 WARRANTY AND REPLACEMENT

A. All trees and plants provided under this Contract shall be in good, healthy and flourishing condition one growing year from the date of final acceptance. If deemed necessary for replacements; Quality, species and size of replacements to be determined by the Landscape Architect.

B. Except for loss beyond control of the Landscape Contractor, replacement of trees and plants of comparable quality and size shall be made by the Landscape Contractor. Replacement trees and plants shall be installed and guaranteed as specified for original planting.

C. The Landscape Contractor shall be held responsible for repair of damages resulting from the defects, materials equipment or workmanship during the execution of his contract.

D. All trees, shrubs and groundcover shall be guaranteed for a period of one calendar year after acceptance by the Architect.

END OF SECTION

SECTION 33 12 00 - WATER UTILITIES

PART 1 - GENERAL

1.1 SECTION INCLUDES:

A. Pipe and fittings for on-site domestic piping.

B. Valves and valve boxes.

C. Accessories.

1.2 RELATED SECTIONS

A. Contract General Conditions and Division 1 Specifications.

B. Section 31 11 00 - Site Clearing.

C. Section 31 22 22 - Soil Materials.

D. Section 31 23 33 - Trench Excavation and Backfill.

E. Section 32 13 13 - Site Concrete Improvements.

1.3 REFERENCES

A. ASTM Test Method D1557.

B. ANSI/ASTM D2466 - Polyvinyl Chloride (PVC) Plastic Pipe Fittings, Schedule 40.

C. ANSI/AWWA C110 - Ductile Iron and Grey-Iron Fittings, 3-inch through 48-inch, for Water and Other Liquids.

D. ANSI/AWWA C151 - Ductile-Iron Pipe, Centrifugally Cast in Metal Molds or Sand-Lined Molds, for Water or Other Liquids.

E. ANSI/AWWA C500 - Gate Valves, 3-inch through 48-inch NPS, for Water and Sewage Systems.

F. ANSI/AWWA C900 - Standard for Polyvinyl Chloride (PVC) Pressure Pipe, 4-inch through 12-inch, for Water.

G. ASTM D1785 - Polyvinyl Chloride (PVC) Plastic Pipe, Schedules 40, 80, and Class 200.

H. ASTM D2855 - Making Solvent-Cemented Joints with Polyvinyl Chloride (PVC) Pipe and Fittings.

I. ASTM D3139 - Joints for Plastic Pressure Pipes using Flexible Elastomeric Seals.

1.4 SUBMITTALS

A. Submit in accordance with Specification Section SUBMITTALS and the Contract General Conditions.

B. Product Data: Provide data on pipe materials, pipe fittings, valves and accessories.

C. Manufacturer's Certificate: Certify that products meet or exceed specified requirements.

1.5 PROJECT RECORD DOCUMENTS

A. Submit under provisions of Contract General Conditions and Division 1 Specifications.

B. Accurately record actual locations of piping mains, valves, connections and appurtenances, referenced to permanent surface features.

C. Identify and describe discovery of uncharted utilities or utilities found at locations different than indicated on plans.

1.6 QUALITY ASSURANCE

A. Perform work in accordance with product manufacturer's recommendations and these Contract Documents.

B. Valves: Manufacturer's name and pressure rating marked on valve body.

1.7 DELIVERY, STORAGE AND HANDLING

A. Deliver, store, protect and handle all products required.

PART 2 - PRODUCTS

1.1 WATER PIPE

A. Ductile Iron Pipe (for iron pipe larger than 3 inches in diameter, above ground): ANSI/AWWA C150/A21.50 and ANSI/AWWA C151/A21.51, thickness Class 50, with cement - mortar lining and seal coating per ANSI/AWWA C104/A21.4.

1. Fittings: ANSI/AWWA C110/A21.10, ductile iron.
2. Joints: Flanged.

B. PVC Pipe (for pipe 3 inches and smaller, underground): ASTM D1785, Schedule 40; 1120 high impact.

1. Fittings: ANSI/ASTM D2464, Schedule 80 PVC (Schedule 40 PVC for pipes 1-1/2 inches and smaller).
2. Joints: ASTM D2855, solvent weld.

C. PVC Pipe (for pipe 4 inches and larger, underground): ANSI/AWWA C900 Class 305, 1120 high impact.

1. Fittings: ANSI/AWWA C111, ductile iron.
2. Joints: ASTM D3139 compression gasket ring.

2.2 VALVES - UP TO 2 INCHES (50 MM)

A. Use full port ball valves for 2 inches and smaller and gate valves for 2-1/2 inches and larger size.

B. Brass or Bronze body, non-rising stem, inside screw, single wedge or disc, IPS ends.

2.3 GATE VALVES - 2-1/2 INCHES (63 MM) AND OVER

A. ANSI/AWWA C509, Iron body, bronze trim, non-rising stem with square nut or control handle wheel, resilient single wedge, threaded or flanged.

2.4 VALVE BOXES

A. Precast Reinforced Concrete. Cast iron lid marked for service. Christy No. G5 or approved equal.

2.5 ACCESSORIES

A. Concrete for Thrust Blocks and Valve Box Surface Collars: Concrete type specified in Specification Section SITE CONCRETE IMPROVEMENTS.

B. Valve Boxes and Covers: Christy No. G5 traffic box, or approved equal. Cover marking shall read "Water". A one-piece PVC riser extension shall be provided as necessary to allow unobstructed access to valve operating nut.

C. Solvent Cement and Primer for PVC Pipe and Fittings: Per ASTM F656 and ASTM D2564.

PART 3 - EXECUTION

3.1 EXAMINATION

A. Verify existing conditions. All plot dimensions are approximate. Before proceeding with any work, carefully check and verify all dimensions and report any variations to the Engineer.

B. Due to the scale of the drawings, it is not possible to indicate all offsets, fittings, etc., which may be required. Carefully investigate the structural and finished conditions affecting all work, and plan work accordingly, furnishing such fittings, etc., as may be required to meet such conditions. Unless dimensions are shown, drawings are generally diagrammatic and indicative of the work to be installed in the most direct and workmanlike manner, so that conflicts between water systems, planting, and architectural features will be minimized.

C. Do not install the facilities as indicated on the drawings when it is obvious in the field that unknown obstructions might not have been considered in the engineering. Such obstructions or differences should be brought to the attention of the Engineer before proceeding.

3.2 PREPARATION

A. Prepare for pipe installation by assembling all needed materials.

B. Cover all PVC pipe during storage.

3.3 BEDDING

A. Excavate trench, pit or hole in accordance with Specification Section TRENCH EXCAVATION AND BACKFILL.

B. Where trench or pit has been overexcavated, place bedding material at bottom of excavations, level soil materials in continuous layers not exceeding 8 inches uncompacted depth.

C. Backfill around sides and to a level 6 inches above the top of pipe with bedding sand, tamped in place.

D. Maintain optimum moisture content of bedding material to attain required compaction density.

3.4 INSTALLATION - PIPE AND FITTINGS

A. Install pipe at locations and depths indicated on plans.

B. Install pipe, fittings, and associated materials in accordance with manufacturer's recommendations.

C. Route pipe in straight line, whenever possible. All changes in direction of pipes shall be made with fittings, not by bending.

D. Install pipe to allow for expansion and contraction without stressing pipe or joints.

E. Form and place concrete for thrust blocks at each elbow, tee, angle or other significant change of direction in loose-joint pipe, per detail on plans.

F. Establish elevations of buried piping to ensure not less than 30 inches of cover, except at connections to existing lines, which may be shallower or deeper, or where shown otherwise on plans.

G. When two water pipes are to be installed in same trench, maintain 4-inch horizontal clearance between pipes.

H. Backfill trench or other excavation in accordance with Specification Section TRENCH EXCAVATION AND BACKFILL.

3.5 INSTALLATION - VALVES

A. Set valves on solid bearing.

B. Where valves are installed below finish surface grade, center and plumb valve box and any necessary extensions over valve. Set box cover flush with finished grade.

C. Pour concrete collar around top of valve box per detail on plans.

D. Furnish and install valves and valve boxes in addition to those shown on plans as required for isolation of lines for construction and disinfection, while minimizing disruption of service to buildings, at no additional cost to the Owner.

3.6 INSTALLATION - THREADED CONNECTIONS

A. Assemble all plastic and galvanized steel threaded pipe and fittings using an approved Teflon tape applied to the male threads only. A minimum of two (2) wraps and a maximum of three (3) wraps of an approved Teflon tape will be required.

B. At all plastic (PVC) pipe connections, work the ductile iron connections first. Connections shall always be plastic into steel, never steel into plastic.

C. A non-hardening sealant and lubricant similar to Permatex #51 or LASCO blue pipe sealant may be used in lieu of Teflon tape. Apply sealant to clean male threads brushing into grooves and to the first three threads of the female threads.

3.7 PRESSURE TESTING OF SITE WATER PIPING SYSTEM

A. Pressure test all onsite water piping systems in accordance with AWWA Standard C605, “Underground Installation of Polyvinyl Chloride (PVC) and Molecularly Oriented Polyvinyl Chloride (PVCO) Pressure Pipe and Fittings”. The pressure testing process shall be performed in cooperation with the authority having jurisdiction and witnessed by the Owner’s Inspector. The constructor shall supply an affidavit of compliance to the Owner as required by AWWA Standard 605.

3.8 DISINFECTION OF DOMESTIC WATER PIPING SYSTEM

A. Disinfect all domestic water piping systems in accordance with AWWA Standard C651, "Disinfecting Water Mains", and in accordance with administrative authority. Disinfection process shall be performed in cooperation with health department having jurisdiction and witnessed by the Owner’s Inspector. During procedure, signs shall be posted at each water outlet stating, "Chlorination - Do Not Drink". After disinfection, water samples shall be collected for bacteriological analysis. Certificate of Bacteriological Purity shall be obtained and delivered to the Owner by the Owner’s Inspector.

3.9 FIELD QUALITY CONTROL

A. Field inspection and testing will be performed under provisions of the Contract General Conditions and Division 1 Specifications.

B. Compaction testing of bedding and backfill will be performed in accordance with ANSI/ASTM D1557.

C. If tests indicate work does not meet specified requirements, recompact, or remove and replace, and retest. Any retests required due to failure of initial tests shall be paid for by the Contractor.

END OF SECTION

SECTION 333000 - SITE SEWER SYSTEMS

PART 1 - GENERAL

1.1 SECTION INCLUDES:

A. Sanitary Sewer Pipelines and Fittings

B. Site Accessories

1.2 RELATED SECTIONS

A. Drawings and general provisions of Contract, including General and Supplementary Conditions, Division-1 Specifications sections, apply to the work of this section.

B. Section 31 11 00 - Site Clearing

C. Section 31 20 00 - Earthwork: Excavation, Filling, and Grading

D. Section 32 13 13 - Site Concrete Improvements

E. Section 31 22 22 - Soil Materials

F. Section 31 23 33 - Trench Excavation and Backfill

1.3 QUALITY ASSURANCE

A. Requirements of Regulatory Agencies

1. Safety Regulations: Work shall comply with all Federal, State and Municipal regulations regarding safety, including the requirements of the following:

   a. William-Steiger Occupational Safety & Health Act of 1970.
   b. State of California, California Administrative Code, Title 8 Industrial Relations, Chapter 4, Subchapter 4, "Construction of Safety Orders" and other State and local agencies having jurisdiction.
   c. All trenching work shall conform to Trench Construction Safety Orders of California State Industrial Accident Commission.

1.4 REFERENCES

A. American Water Works Association (AWWA).

B. American Society for Testing and Materials (ASTM):

1. Designation D3034 - Polyvinyl Chloride (PVC) pipe.

C. California Plumbing Code, Latest Edition (CPC).

D. Fresno County Health Department Standards.

1.5 SUBMITTALS

A. Submit under provisions of Specification Section - SUBMITTAL PROCEDURES.

B. Certificates of compliance for material

C. Product Data: Provide data indicating pipe, accessories, and associated equipment to be furnished.

D. Submit manufacturer's data and/or fabrication drawings for Sanitary Sewer Pipelines, Sanitary Sewer Manholes and Sanitary Sewer Fittings, installed under this Section. No items shall be incorporated into the work until submittals are approved by the Engineer.

1.6 COORDINATION

A. Verify location of existing utilities have been indicated at by local utility authorities.

1.7 EXISTING UTILITIES

A. The Engineer has made a diligent attempt to indicate on the plans the location of all main and trunkline utility facilities which may affect the Work. In most cases, however, the only available information relative to the existing location of said facilities was small scale undimensioned plats. The location of said facilities, therefore, shall be considered approximate only, until exposed by the Contractor.

B. Service laterals and appurtenances have also been shown where information was available as to their location. In most cases, however, the only available information relative to the existing location of said facilities was small scale undimensioned plats. The location of said facilities, therefore, shall be considered approximate only, until exposed by the Contractor.

C. At new work location, expose by hand methods all existing utilities along the route of the new work prior to using any mechanical equipment. If mechanical equipment is allowed at a particular location, it may only be used after the completion by the Contractor of a successful exhaustive search by hand methods to locate all existing facilities as indicated on the plans, and as indicated at the work site by local utility authorities.

D. Maintain all existing utility mains and service lines in constant service during construction of the Work.

PART 2 - PRODUCTS

2.1 MATERIALS

A. Sanitary sewer pipelines shall be polyvinyl chloride (PVC) pipe conforming to ASTM Designation 3034, SDR-35, unless otherwise indicated on plans.

B. Sanitary sewer pipelines for pipe less than 4 inches shall be Schedule 40 PVC pipe, ASTM D1785, 1120 high impact, unless otherwise indicated on plans.

C. All sanitary sewer fittings shall be watertight connections using PVC sewer fittings as approved by the California Plumbing Code, or approved equal to be determined by the Civil Engineer.

D. Surface cleanouts to be furnished and installed per plans and Plumbing Codes.

E. Locator Tape: Tape shall be an inert material such as polyethylene plastic with a metallic core, and highly resistant to alkalis, acids, or other chemical components likely to be encountered in soils. The tape shall be bright colors for contrast with the soils with identifying print in black letters. The tape shall be six inches wide and be printed "CAUTION - SEWER LINE BELOW".

PART 3 - EXECUTION

3.1 CLEARING OF WORK SITE FOR SITE IMPROVEMENTS

A. Clear site for improvements per construction drawing demolition plan and in accordance with Specification Section SITE CLEARING.

3.2 TRENCH EXCAVATION

A. Trench excavation and backfilling shall be in accordance with Specification Section TRENCH EXCAVATION AND BACKFILL and construction drawing detail.

3.3 SOIL MATERIALS

A. Excavated materials and imported materials shall meet engineering recommendations in accordance with Specification Section SOIL MATERIALS.

3.4 PIPE INSTALLATION

A. Pipe Laying: Alignment and elevation stakes shall be set at intervals with offsets and cut to the invert of the pipe.

1. Proper facilities shall be provided for stringing and lowering sections of pipe into the trench. The pipe shall be laid carefully to lines and grades given.
2. The grade line shown on the plans indicates the flow line or invert of the pipe and all cuts, unless otherwise indicated, refer to this line.
3. After the trench for pipe has been brought to the proper line and grade, the pipe shall be laid in the following manner.

   a. Pipe laying shall proceed upgrade with the bell ends of bell and spigot pipe placed upstream. Each section of pipe shall be laid to line and grade as herein specified and in such a manner as to form a watertight, concentric joint with the adjoining pipe. The interior of the pipe shall be cleared of all dirt and debris and excess joint sealing material as the work progresses. Pipe shall not be laid when the condition of the trench or weather is unsuitable. All open ends of pipe and fittings shall be adequately and securely closed whenever the work is discontinued for more than one-half hour. If pipe with elliptical or quadrant reinforcement is used, care shall be taken to properly orient the axis.

4. All joint surfaces shall be cleaned before joints are made.

5. The Contractor shall furnish and use, for grade and alignment control, a laser beam system which complies with OSHA requirements. The laser system shall have good visibility when used with suitable target material. The laser system must be of the self-leveling type so that the laser beam is automatically compensated for minute grade disturbances.
6. The laser system must also have an early warning system that instantly warns the pipe layer when the laser is off grade. The laser system is to be provided by the Contractor and shall have a minimum accuracy of ±0.01 foot per one hundred feet (100') on line; and a minimum visible range of one thousand feet (1000'). When conditions are such that this method is impractical, such as on short pipe runs, the Contractor shall have an Engineer on the ground to set grade of each joint of pipe by means of an Engineer's level.

B. Sewer Systems Plugs: Temporary plugs of brick or mortar shall be installed on all sewer projects at points of connection to existing facilities. These plugs shall remain in place until completion of the balling and flushing operation. The plugs, intended to prevent water from the balling and flushing operation, drainage, or any other condition from entering the existing system, shall be installed or removed in the presence of and under the direct supervision of the Engineer. Until the system has been pumped clear of accumulated water, the plugs shall not be removed. This water must not be allowed to enter adjacent sewer or drainage systems.

C. Internal Inspection: Upon completion of construction and prior to final inspection, the Contractor shall clean the entire new pipeline of all dirt and debris. Any dirt or debris in previously existing pipes or ditches in the area, which in the opinion of the Engineer resulted from the new installation, shall also be removed by the Contractor. Sewer pipes shall be cleaned by the controlled balling method. Temporary plugs shall be installed and maintained during cleaning operations at points of connection to existing facilities to prevent water, dirt, and debris from entering the existing facility. Temporary plugs for sewer systems shall also conform to Subsection B, above. Water from the drainage system operations shall be routed through a suitable trap to collect any dirt and debris prior to discharging into any downstream facility. The Contractor shall notify the Architect immediately after completion of the pipe cleaning operations. Cleaning of drainage pipes by the controlled balling method will not be required.

D. As soon as possible after the completion of the pipe cleaning, and prior to final acceptance, the Architect or Engineer may make a visual internal inspection of the new pipeline either manually or with television equipment.

3.5 COORDINATION

A. Coordinate with the campus for the shutdown of the existing sewer system to make new sewer connection. Install sewer pipelines before making tie-in to the existing sewer pipeline. Tie-in work may proceed during the campus non-use of the existing sewer system such as on weekends.

3.6 TESTING OF SANITARY SEWERS

A. After cleaning per Section 3.4-C, each section of sewer constructed shall be tested in accordance with acceptable "Low Pressure Air Test for Sanitary Sewers" methods such as presented in the Journal of Sanitary Engineering, Division ASCE, April 1964, to test the point of effluent disposal. All lines and components shall be leak proof.

3.7 INSPECTION OF SANITARY SEWERS

A. System components shall be properly identified as to the manufacturer.

3.8 CLEAN-UP

A. Remove from the site all rubbish, debris, etc. in a lawful manner, resulting from work in this Section. The clean-up shall include the replacement and repair of any damaged or disturbed property.

END OF SECTION

THIS PAGE IS LEFT INTENTIONALLY BLANK

SECTION 334000 - STORM DRAINAGE

PART 1 - GENERAL

1.1 RELATED DOCUMENTS

A. Drawings and general provisions of the Contract, including General and Supplementary Conditions and Division 01 Specification Sections, apply to this Section.

1.2 SUMMARY:

A. This section includes the following:

1. Provide all materials, labor, equipment and services necessary to furnish and install Storm Drainage System, accessories and other related items necessary to complete the Project as indicated by the Contract Documents unless specifically excluded.

B. RELATED SECTIONS:

1. Drawings and general provisions of Contract, including General and Supplementary Conditions and Divisions 00 and 01 sections, apply to this work.
2. Section 31 22 22 – Soil Materials
3. Section 31 23 33 – Trench Excavation and Backfilling.
4. Section 32 13 13 – Site Concrete Improvements.

1.3 REFERENCES

A. ANSI/ASTM C76 - Reinforced Concrete Culvert, Storm Drain and Sewer Pipe.

B. ANSI/ASTM C443 - Joints for Circular Concrete Sewer and Culvert Pipe, Using Rubber Gaskets.

C. ANSI/ASTM C478 - Precast Reinforced Concrete Manhole Sections.

D. ASTM D1557.

1.4 DEFINITIONS

A. Bedding: Fill placed under, around, beside and directly over pipe, prior to subsequent backfill operations.

B. Utility: Any buried or above ground pipe, conduit, cable, associate device or appurtenances, or substructure pertaining thereto.

1.5 SUBMITTALS

A. Submit under provisions of Division 01.

B. Certificates of compliance for material.

C. Product Data: Provide data indicating pipe, accessories, and associated equipment to be furnished.

D. Submit manufacturer's data and/or fabrication drawings for all pipes, and appurtenances installed under this Section. No items shall be incorporated into the work until submittals are approved by the Architect/Engineer.

1.6 COORDINATION

A. Coordinate work with Owner’s personnel.

B. Verify that the location of existing utilities have been indicated at work site by utility authorities and Owner’s personnel.

C. Coordinate work with other project work.

1.7 EXISTING UTILITIES

A. The Engineer has made a diligent attempt to indicate on the plans the location of all main and trunkline utility facilities which may affect the Work. In most cases, however, the only available information relative to the existing location of said facilities was small scale undimensioned plats. The location of said facilities, therefore, shall be considered approximate only, until exposed by the Contractor.

B. Service laterals and appurtenances have also been shown where information was available as to their location. In most cases, however, the only available information relative to the existing location of said facilities was small scale undimensioned plats. The location of said facilities, therefore, shall be considered approximate only, until exposed by the Contractor.

C. At new work location, expose by hand methods all existing utilities along the route of the new work prior to using any mechanical equipment. If mechanical equipment is allowed at a particular location, it may only be used after the completion by the Contractor of a successful exhaustive search by hand methods to locate all existing facilities as indicated on the plans, and as indicated at the work site by Owner’s personnel.

D. Maintain all existing utility mains and service lines in constant service during construction of the Work.

1.8 PROJECT RECORD DOCUMENTS

A. Submit under provisions of Division 01.

B. Accurately record actual locations of utilities encountered.

PART 2 - PRODUCTS

1.1 MATERIALS

A. Reinforced Concrete Pipe for pipe larger than fifteen (15) inches: ANSI/ASTM C76, Class 3, with rubber gasket joints per ANSI/ASTM C443.

B. Storm drainage sewer pipeline shall be polyvinyl chloride (PVC) pipe for storm sewer conforming to ASTM designation 3034, SDR 35 for pipe fifteen (15) inches or less.

C. Storm drainage pipeline shall be polyvinyl chloride (PVC) pipe for storm sewer conforming to ANSI/AWWA Schedule 40 for pipe three (3) inches or less.

D. Poured in Place Concrete: Per Section 321313 – Site Concrete Improvements.

E. Mortar: Composed of one part, by weight, portland cement (Type II low alkali per ASTM C150), 2 parts, by weight, sand, and water.

F. Manhole Frames, Covers and Grates: Cast Iron per ASTM A48, Class 25.

G. Soil Fill for Concrete Pipe Bedding Envelope: Backfill or Sandfill per Section 312222 and Section 312300.

H. Concrete collar shall be constructed as per detailed drawing.

I. Cleanout shall be constructed as per detail drawing.

J. All metallic pipe, fittings and appurtenances in contact with soil shall be coated or wrapped with an approved material, as required to protect it from corrosive soil.

K. Locator Tape: Tape shall be an inert material such as polyethylene plastic with a metallic core, and highly resistant to alkalis, acids, or other chemical components likely to be encountered in soils. The tape shall be bright colors for contrast with the soils with identifying print in black letters. The tape shall be six inches wide and be printed “CAUTION – STORM SEWER LINE BELOW”.

PART 3 - EXECUTION

1.1 EXAMINATION

A. Verify site conditions.

1.2 PREPARATION

A. Identify location of proposed storm drainage facilities to be constructed. Expose connection points to existing system.

B. Locate, identify, and protect existing above and below grade utilities from damage.

C. Protect plant life, lawns, trees, shrubs, and other features not authorized for removal.

D. Protect existing structures and other improvements to remain from damage from excavation equipment and vehicular traffic.

E. Employ equipment and methods appropriate to the work site.

F. Protect excavated areas from drainage inflow, and provide drainage to all excavated areas. Dewater existing drainage basins and existing drainage pipeline systems as necessary to accomplish the work.

G. Comply with safety requirements as they pertain to excavations, per Section 312300.

H. Remove all interfering surface and subsurface improvements authorized for removal.

1.2 EXCAVATION

A. Excavate soil required to locate existing utilities and install the work.

B. Excavate trenches and pits per Section 312333.

C. Excavate trenches and pits to allow installation and construction of the storm drainage facilities to the alignment, grades, depths and cross-sections as indicated on the construction plans.

D. Excavate trench to depth which is 4-inches below the outside bottom of the pipe barrel to be placed therein.

E. Cut trenches just wide enough to allow the installation of the pipe and pipe bedding as indicated on the plans. Minimize trench width above the pipe.

F. Provide protection to public per Division 01.

1.3 INSTALLATION AND BEDDING OF STORM DRAIN PIPE

A. Install the pipe and fittings to the lines and grades shown on the construction plans.

B. Install pipe and fittings in accordance with the manufacturer's recommendations, and these specifications.

C. Unless otherwise approved by the Engineer, lay all pipe upgrade from structure to structure, with bell or socket ends of pipe upgrade.

D. Excavate suitable bell (or socket) holes in the bedding material, so that the bells do not bear on the subgrade or bedding. Provide uniform bearing of pipe barrel on bedding material.

E. Ensure that all joints are properly "homed" and are watertight.

F. Bed concrete pipe in backfill or sandfill soil envelope, and compact to a minimum of 90% relative compaction. Place and compact the bedding material under, around and over the pipe, filling the trench cavity and extending from the bottom of the trench (4-inches below the outside bottom of the pipe barrel) to a level 6-inches above the outside top of the pipe barrel.

1.4 INSTALLATION OF STORM DRAINAGE STRUCTURES AND APPURTANCANCES

A. Install storm drainage structures as indicated on the construction plans, in accordance with the manufacturer's recommendations, and as specified herein.

B. Construct poured-in-place concrete per Section 321313.

C. Key top of poured-in-place concrete bases for structures to receive the tongue of precast riser sections.

D. Construct cleanout, outfall structure per detail drawing.

1.5 BACKFILLING TO FINISHED GRADE AND FINISHED GRADING

A. Place and compact backfill per Section 312333/3.4.

B. Conform finished surface to the lines, grades and cross-sections shown on the plans, or as otherwise directed by the Inspector.

C. In areas to receive paving or a significant thickness of sealing material, temporarily set manhole frame and cover below finish grade, then return after final surfacing and/or pavement sealing and bring manhole frame and cover to final grade, as shown on the plans.

D. Fine grade all finished soil surfaces disturbed to the lines, grades and cross-sections shown on the plans.

E. Rake and smooth all finished dirt surfaces.

1.6 TOLERANCES

A. Pipe laying tolerances:

1. Above grade: Not to exceed 1/4-inch above planned grade.
2. Below grade: Not to exceed 1/2-inch below planned grade.
3. Alignment: Not to exceed 2-inches from planned alignment, if gradual and regular over a distance of 20-feet.

B. Structure finish grade tolerance: Within 1/4-inch of planned grade, but must match adjacent improvements.

1.7 FIELD QUALITY CONTROL

A. Field inspection and testing will be performed under provisions of Division 01.

B. Compaction testing of bedding and backfill will be performed in accordance with ASTM D 1557.

C. If tests indicate work does not meet specified requirements, recompact, or remove and replace, and retest at no additional cost to Owner.

END OF SECTION

APPENDIX "B": INTERIOR COLOR SCHEDULE

PENDING OWNER APPROVAL

SCHEDULES:

INTERIOR COLOR SCHEDULE 1	**Building L**	**Administration**
	Building M	**Kindergarten**
	Building N	**Classroom**
INTERIOR COLOR SCHEDULE 2	**Building B**	**Classroom Infill**
	Building P	**Portables (Existing)**

DRAWINGS:

ID-101	**Floor Pattern & Color Locations**
ID-201	**Accent Paint Locations**

APPENDIX "B": INTERIOR COLOR SCHEDULE

PENDING OWNER APPROVAL

SCHEDULE 1 - Buildings L, M, N

MATERIAL	MANUFACTURER	REF #	DESCRIPTION
MODULAR CASEWORK			
Plastic Laminate			
Countertop/Splash			
PL1 @ Bldg L	Wilsonart		TBD
PL2 @ Bldgs M, N	Wilsonart	4651-60	Navy Legacy
Base Cabinet	Wilsonart	7909-60	Fusion Maple
Tall Cabinet	Wilsonart	7909-60	Fusion Maple
Door	Wilsonart	7909-60	Fusion Maple
Drawer	Wilsonart	7909-60	Fusion Maple
Face Panel	Wilsonart	7909-60	Fusion Maple
End Panel	Wilsonart	7909-60	Fusion Maple
Back Panel	Wilsonart	7909-60	Fusion Maple
Edge Banding	Wilsonart	7909-60	Fusion Maple
POLISHED CONCRETE			
Color 1	Bomanite		Natural
RESILIENT SHEET			
Sheet Vinyl	Armstrong	88717	Corlon; Color: Otter Gray
Note: Weld rod to match			
RESILIENT BASE AND ACCESSORIES			
Rubber Base			
Color 1	Burke	217	Charcoal
Unless Otherwise Noted			
Transition Mouldings	Burke	217	Charcoal
RESINOUS FLOORING			
Resinous Floor	Sherwin Williams	Ceramic Carpet #400	336 - Charcoal
CARPET			
Carpet (Broadloom)			
BL-1	Tandus	3026 - 23512	Aftermath II, Color: Tapestry
Unless Otherwise Noted			
BL-2	Tandus	02875 -18548	Plexus Color IV, Great Lakes
Refer to attached drawing ID-101.			
Walk-Off			
WO-1	Tandus	02578 - 19100	Abrasive Action Color: Charcoal

APPENDIX "B": INTERIOR COLOR SCHEDULE

PENDING OWNER APPROVAL

SCHEDULE 1 - Buildings L, M, N

MATERIAL	MANUFACTURER	REF #	DESCRIPTION
WALLCOVERINGS			
Fiberglass Reinforced Panels	Nudo		Khaki
Vinyl Covered Tackboard			
Color 1	Chatfield Clarke		Off-White
Note: @ Bldgs M & N only			
Color 2	Koroseal	621-81	Muratone, Color: Aqua
Note: @ Bldg L Admin only.			
PAINT			
Gypsum Board			
Color 1	ICI		Match District standard Swiss Coffee
Unless otherwise noted.			
Color 2	ICI		Match building standard 'Blue'
Refer to attached drawing ID-201.			
Metal Doors/Frames			
Metal Doors	ICI		Match building standard 'Blue'
Metal Frames	ICI		Match existing buidling standard Swiss Coffee
Unless Otherwise Noted.			
Exception: Bldg L - Double entry door/frame 101a to be Bldg Standard Blue at exterior and interior face.			
Steel and Fabrications			
Roof hatch and ladder	ICI		Match District Standard Swiss Coffee
ROUGH CARPENTRY			
Plywood Panels	ICI		Match District Standard Swiss Coffee
MISCELLANEOUS SPECIALTIES			
Vertical Blinds	Louverdrape		To be selected from manufacturers full range of colors
Toilet Partitions	Scranton		Black Paisley
VISUAL DISPLAY BOARDS			
Liquid Markerboard	Claridge		White
IDENTIFYING DEVICES			
Signage	Gravograph		To be selected from manufacturers full range of colors

APPENDIX "B": INTERIOR COLOR SCHEDULE

PENDING OWNER APPROVAL

SCHEDULE 1 - Buildings L, M, N

MATERIAL	MANUFACTURER	REF #	DESCRIPTION

GENERAL NOTES

1. The intent of this schedule is to clarify and detail the color and patterns of finishes. All information regarding construction conditions, casework, framing and ceiling details, etc. shall be per Architectural plans, unless otherwise noted.
2. Interior Color Schedule to be used in conjunction with Architecural plans and Specifications.
3. Paint colors listed on Interior Color Schedule are for color reference only. Refer to Architectural Specifications and Finish Schedules for information regarding paint systems.
4. Change of paint color to occur on an inside corner, unless otherwise noted.
5. All gypsum board surfaces to be painted Color 1, unless otherwise noted.
6. All vision light frames in doors to match color of hollow metal door frames.
7. All access doors and frames to be painted to match color of adjacent surface. If access doors and frames occur on vinyl covered tackboard, paint to be Color 1.
8. All miscellaneous exposed to view metal and mechanical equipment, louvers, receiving a field finish to be painted to match color of adjacent surface.
9. All interior ladders and ladder assemblies receiving a field finish to be painted to match color of adjacent surface.
10. All exposed to view sheet metal to match color of adjacent material. If adjacent material is vinyl covered tackboard paint to be Color 1.
11. All accent paint, changes in paint color and extent of paint and accent paint to be verified by Darden Architects at job site prior to commencement of work.
12. Samples and site mock-up of each polished concrete color (Color1) must be provided to, and approved by Darden Architects prior to commencement of work.
13. Not used
14. All polished concrete to be Color 1, unless otherwise noted.
15. All Steel and Fab to be painted to match adjacent color, unless otherwise noted.
16. All modular casework edgebanding to match adjacent plastic laminate.
17 All gyp board ceilings to be Color 1, unless otherwise noted.
18. Paint colors listed for metal frames and doors are for ***interior*** locations and ***interior*** face of frames and doors only. Refer to *Exterior* Color Schedule for *exterior* face of doors and frames.
19. Verify all District standard paint colors and formulas with Owner prior to submittals.
    Match District Standard paint Swiss Coffee to newly painted Room P37 (Preschool Portable).

APPENDIX "B": INTERIOR COLOR SCHEDULE

PENDING OWNER APPROVAL

SCHEDULE 2 - Buildings B, P

MATERIAL	MANUFACTURER	REF #	DESCRIPTION
MODULAR CASEWORK			
Plastic Laminate			
Counter Top	Wilsonart	4651-60	Navy Legacy
Base Cabinet	Wilsonart	7909-60	Fusion Maple
Tall Cabinet	Wilsonart	7909-60	Fusion Maple
RESILIENT BASE AND ACCESSORIES			
Rubber Base			
Color 1	Burke	217	Charcoal
Transition Moulding	Burke	217	Charcoal
CARPET			
Carpet (Broadloom)			
BL-1	Tandus	3026 - 23512	Aftermath II, Color: Tapestry
Unless Otherwise Noted			
Walk-Off			
WO-1	Tandus	02578 - 19100	Abrasive Action, Color: Charcoal
WALLCOVERINGS			
Vinyl Covered Tackboard			
Color 1	Chatfield Clarke		Off-White
PAINT			
Gypsum Board			
Color 1	ICI		Match existing District standard Swiss Coffee
Unless otherwise noted.			
Metal Doors/Frames			
Metal Doors	ICI		Match existing building standard "Blue"
Metal Frames	ICI		Match existing buidling standard Swiss Coffee
Unless Otherwise Noted			
MISCELLANEOUS SPECIALTIES			
Vertical Blinds	Louverdrape		To be selected from manufacturers full range of colors
VISUAL DISPLAY BOARDS			
Liquid Markerboard	Claridge		White

APPENDIX "B": INTERIOR COLOR SCHEDULE

PENDING OWNER APPROVAL

SCHEDULE 2 - Buildings B, P

MATERIAL	MANUFACTURER	REF #	DESCRIPTION
IDENTIFYING DEVICES			
Signage	Gravograph	To be selected from manufacturers full range of colors	

GENERAL NOTES

1. The intent of this schedule is to clarify and detail the color and patterns of finishes. All information regarding construction conditions, casework, framing and ceiling details, etc. shall be per Architectural plans, unless otherwise noted.
2. Interior Color Schedule to be used in conjunction with Architecural plans and Specifications.
3. Paint colors listed on Interior Color Schedule are for color reference only. Refer to Architectural Specifications and Finish Schedules for information regarding paint systems.
4. Paint colors listed for metal frames and doors are for ***interior*** face of frames and doors only. Refer to *Exterior* Color Schedule for *exterior* face of doors and frames.
5. In classroom locations where patching occurs at tackboard, Match existing tackboard texture. All new and existing tackboard panels to be painted for consistent appearance.
6. Verify all District standard paint colors and formulas with Owner prior to submittals.
   Match District Standard paint Swiss Coffee to newly painted Room P37 (Preschool Portable).

2 101 South Copy

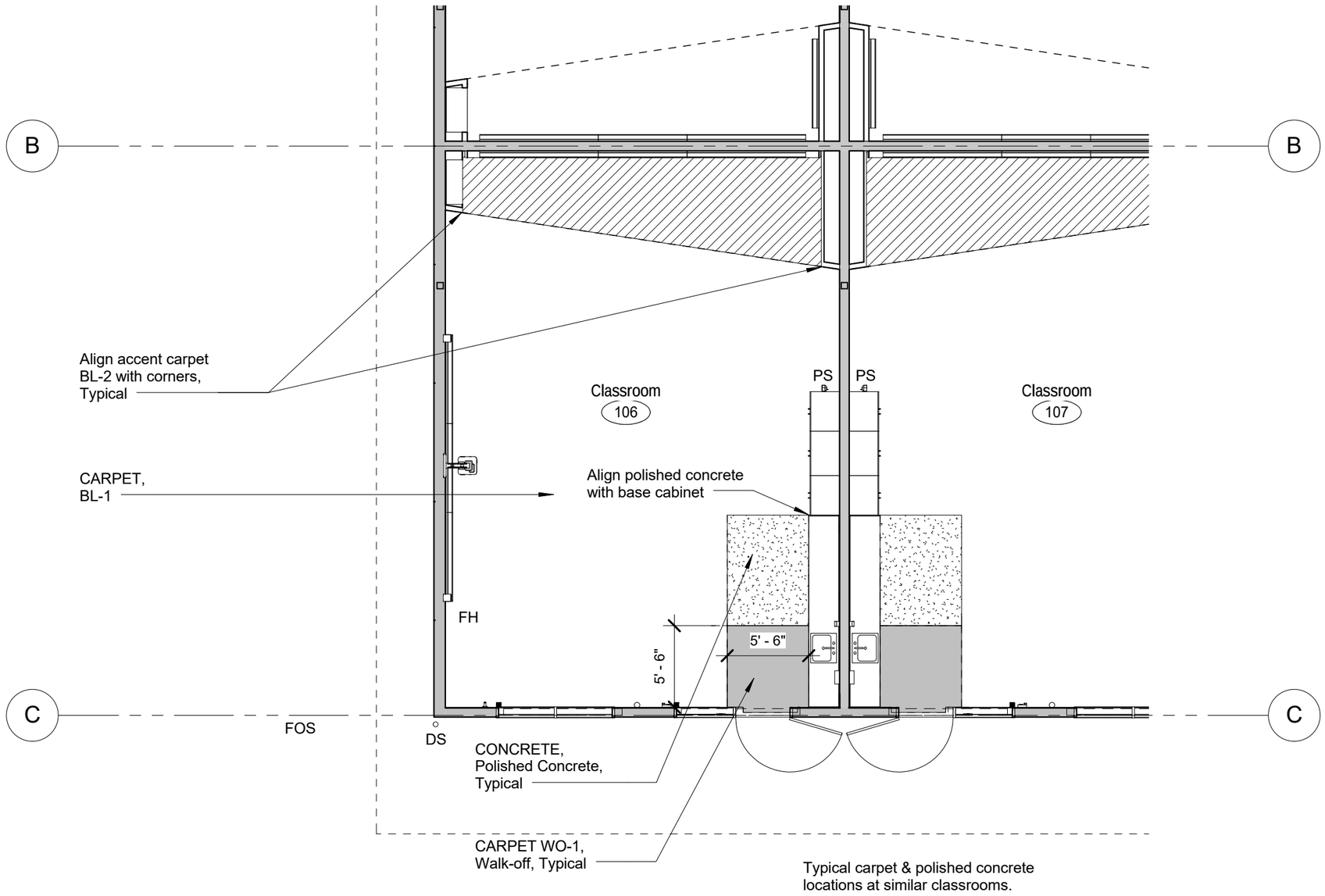

DSA File No: DSA File
OSHPD No: OSHPD 7220

Floor Pattern & Color Locations

Building N- 10-Classroom Building

Addams Elementary School New Building and Modernization

Fresno Unified School District

4774 East Yale Avenue Fresno, CA

darden architects

ARCHITECTURE • PLANNING • INTERIORS

Edwin S. Darden Jr. AIA • Martin E. Dietz AIA CCS • Edwin C. Goodwin AIA
Robert L. Petithomme AIA • Grant E. Dodson AIA • DeDe Darnell ASID
Antonio J. Avila AIA • Michael K. Fennacy AIA • Michael J. Nelson
Sean P. Mendoza AIA • Leslie Rau IIDA • Martin A. Ilic • Gerardo Padron

6790 N. West Avenue • Fresno, California 93711 • 559 448-8051 • Fax 559 446-1765

Designed By Designer	Project Number: 1725
Drawn By: Author	Scale: 1/8" = 1'-0"
Checked By: Checker	
Reviewed By Approver	ID-101
Date: 02/18/19	

3/29/2019 5:05:31 PM
D:\Revit_SS_local files\1725_Addams_ES_New_Classroom_sharis.rvt

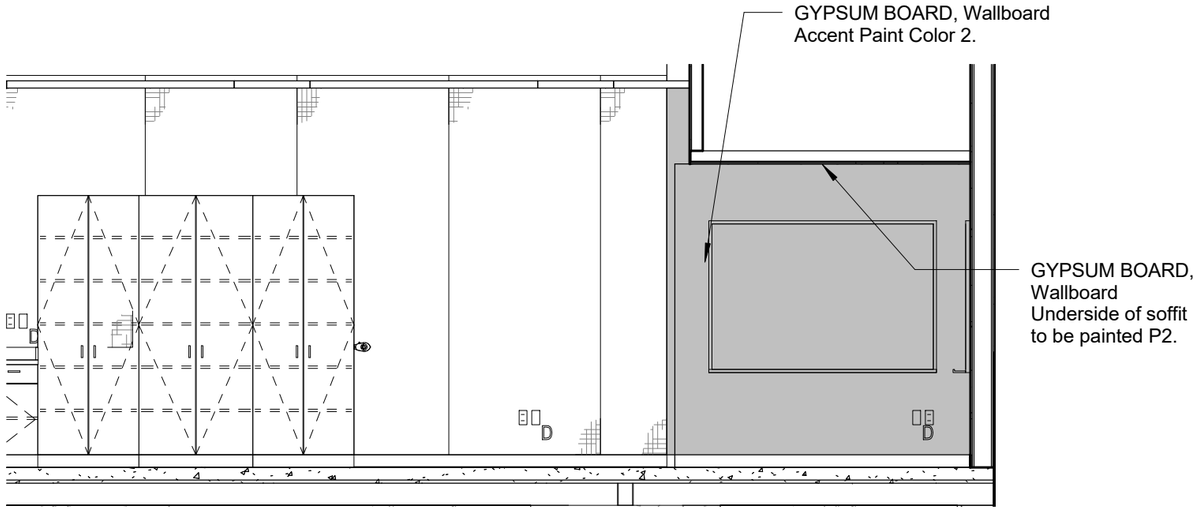

EAST

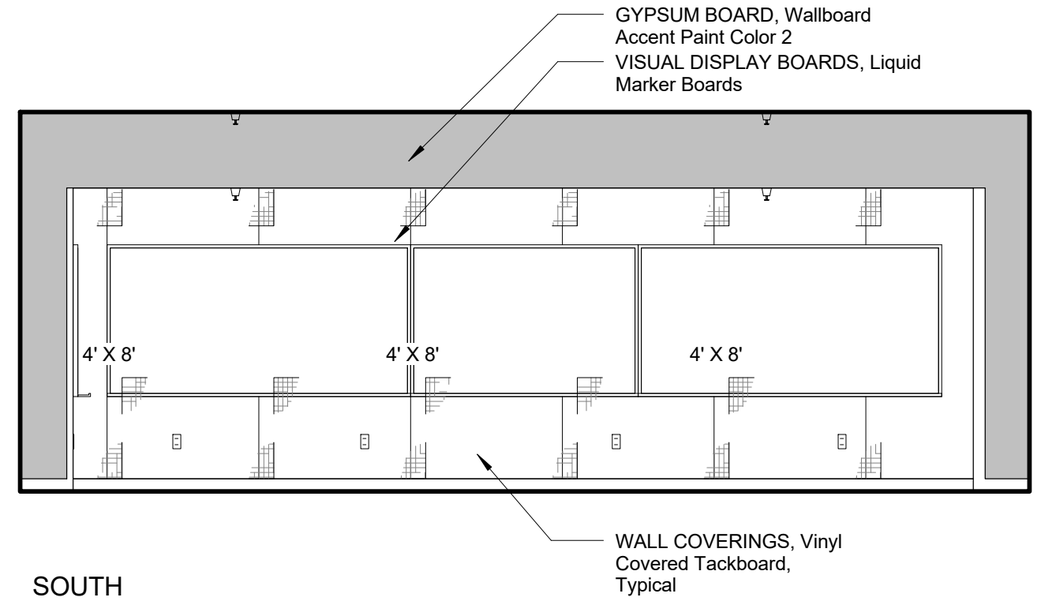

SOUTH

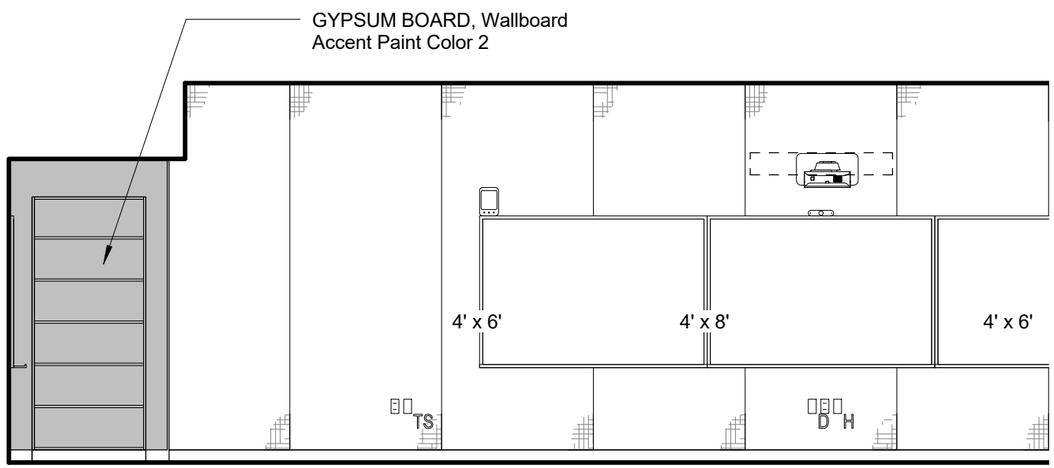

WEST

101 Classroom (Cont.)

Typical accent paint location at all classrooms with similar conditions.

DSA File No: DSA File
OSHPD No: OSHPD 220

Accent Paint Locations

Building N- 10-Classroom Building

Addams Elementary School New Building and Modernization

Fresno Unified School District

4774 East Yale Avenue Fresno, CA

darden architects

ARCHITECTURE • PLANNING • INTERIORS

Edwin S. Darden Jr. AIA • Martin E. Dietz AIA CCS • Edwin C. Goodwin AIA
Robert L. Petithomme AIA • Grant E. Dodson AIA • DeDe Darnell ASID
Antonio J. Avila AIA • Michael K. Fennacy AIA • Michael J. Nelson
Sean P. Mendoza AIA • Leslie Rau IIDA • Martin A. Ilic • Gerardo Padron

6790 N. West Avenue • Fresno, California 93711 • 559 448-8051 • Fax 559 446-1765

Designed By Designer	Project Number: 1725
Drawn By: Author	Scale: 1/4" = 1'-0"
Checked By: Checker	Copyright 2017 Darden Architects
Reviewed By Approver	ID-201
Date: 02/18/19	

APPENDIX "C": EXTERIOR COLOR SCHEDULE

PENDING OWNER APPROVAL

SCHEDULES:

EXTERIOR COLOR SCHEDULE 1	**Building L**	**Administration**
	Building M	**Kindergarten**
	Building N	**Classroom**
EXTERIOR COLOR SCHEDULE 2	**Building B**	**Classroom Infill**
	Building P	**Portables (Existing)**

Project: ***Adams Elementary School - 10 Classroom & Kindergarten Buildings*** ***Darden Project #1725***
Client: ***Fresno Unified School District***
Location: ***Fresno, CA***

APPENDIX "C": EXTERIOR COLOR SCHEDULE

PENDING OWNER APPROVAL

SCHEDULE 1 - Buildings L, M, N

MATERIAL	MANUFACTURER	REF #	DESCRIPTION
CAST-IN-PLACE			
Concrete Color			Clear
CEMENT PLASTER			
Cement Plaster			
PC-1	ICI		Match existing building standard
Refer to Architectural Exterior Elevations for location of colors.			
PAINT			
Steel and Fabrications		`	
Downspouts:			
MC-1	ICI		Match existing building standard color PC-1
Gutters:			
MC-2	ICI		Match existing building standard Blue
Sheet Metal			
Fascia Trim, Parapet Caps			
MC-2	ICI		Match existing building standard Blue
Metal Doors / Frames			
Metal Doors:			
DC-1	ICI		Match existing building standard Blue
Metal Frames:			
MC-2	ICI		Match existing building standard Blue
LOUVERS			
Louvers			

GENERAL NOTES:

1. Paint colors listed on Exterior Color Schedule are for color reference only. Refer to Architectural Specifications and Finish Schedules for type.

APPENDIX "C": EXTERIOR COLOR SCHEDULE

PENDING OWNER APPROVAL

SCHEDULE 1 - Buildings L, M, N

MATERIAL	MANUFACTURER	REF #	DESCRIPTION

2. Change of color is to occur at control joints or an inside corner, unless otherwise noted.
3. Cement plaster accessories shall match primary color of adjacent material, unless otherwise noted. Cement plaster vents to remain unfinished.
4. Mechanical grille/louvers with factory baked enamel finish shall match primary color of adjacent surface, unless otherwise noted. Louvers located in doors shall match door color.
5. All miscellaneous visual architectural sheet metal and steel fabrications including, but not limited to, mechanical/ plumbing/ electrical equipment shall match color of adjacent material, unless otherwise noted.
6. Soffits shall match color of outer face wall, unless otherwise noted.
7. Paint colors listed for metal frames and doors are for ***exterior*** face of frames/doors only. Refer to *Interio*r Color Schedule for interior locations and *Interio*r face of doors and frames.
8. Verify all District standard paint colors and formulas with Owner prior to submittals.

APPENDIX "C": EXTERIOR COLOR SCHEDULE

PENDING OWNER APPROVAL

SCHEDULE 2 - Buildings B, P

MATERIAL	MANUFACTURER	REF #	DESCRIPTION
CAST-IN-PLACE			
Concrete Color			Clear
CEMENT PLASTER			
Cement Plaster			
PC-1	ICI		Match existing building standard
PC-2	ICI		Match existing building standard Blue
Refer to Architectural Exterior Elevations for locations of colors.			
PAINT			
Steel and Fabrications			
Downspouts:			
MC-1	ICI		Match existing building standard color PC-1
Gutters:			
MC-2	ICI		Match existing building standard Blue
Wood Trim			
WD-2	ICI		Match existing building standard Blue
Sheet Metal			
Fascia Trim, Parapet Caps			
MC-2	ICI		Match existing building standard Blue
Metal Doors / Frames			
Metal Doors:			
DC-1	ICI		Match existing building standard Blue
Metal Frames:			
MC-2	ICI		Match existing building standard Blue

APPENDIX "C": EXTERIOR COLOR SCHEDULE

PENDING OWNER APPROVAL

SCHEDULE 2 - Buildings B, P

MATERIAL	MANUFACTURER	REF #	DESCRIPTION

GENERAL NOTES:

1. Paint colors listed on Exterior Color Schedule are for color reference only. Refer to Architectural Specifications and Finish Schedules for type.
2. Change of color is to occur at control joints or an inside corner, unless otherwise noted.
3. Cement plaster accessories shall match primary color of adjacent material, unless otherwise noted.
4. Mechanical grille/louvers with factory baked enamel finish shall match primary color of adjacent surface, unless otherwise noted.
5. All miscellaneous visual architectural sheet metal and steel fabrications including, but not limited to, mechanical/ plumbing/ electrical equipment shall match color of adjacent material, unless otherwise noted.
6. Soffits shall match color of outer face wall, unless otherwise noted.
7. Paint colors listed for metal frames and doors are for ***exterior*** face of frames/doors only. Refer to *Interio* r Color Schedule for *Interio* r face of doors and frames.
8. Verify all District standard paint colors and formulas with Owner prior to submittals.

FACS
Forensic Analytical Consulting Services

November 16, 2018

Limited Asbestos and Lead Survey Report

Addams Elementary School
2117 W. McKinley Ave.
Fresno, CA 93728

Prepared for:

Cecilia Castillo
Fresno Unified School District
4600 N. Brawley Ave.
Fresno, CA 93722
559-457-6117 |
cecilia.castillo@fresnounified.org

Prepared By:

Joseph M. Vuglia, CAC, I/RA
Forensic Analytical Consulting Services
371 E. Bullard Avenue, Suite 109
Fresno, CA 93710
559-436-0277 | jvuglia@forensicanalytical.com

FACS Project #PJ39403

Contents

List of Acronyms

ACCM	Asbestos Containing Construction Material
ACM	Asbestos Containing Material
AHERA	Asbestos Hazard Emergency Response Act
AIHA	American Industrial Hygiene Association
CAC	California - Certified Asbestos Consultant
Cal/OSHA	California Occupational Safety and Health Association
CCR	Code of California Regulations
CFR	Code of Federal Regulation
DOSH	Department of Occupational Safety and Health
ELAP	Environmental Laboratory Accreditation Program
EPA	Environmental Protection Agency (EPA)
FACS	Forensic Analytical Consulting Services, Inc.
FALI	Forensic Analytical Laboratories, Inc.
ND	None Detected
NESHAP	National Emissions Standard Hazardous Air Pollutants
NIOSH	National Institute for Occupational Safety and Health
NIST	National Institute of Science and Technology
NVLAP	National Voluntary Laboratory Accreditation Program
PLM	Polarized Light Microscopy
TEM	Transmission Electron Microscopy
TTLC	Total Threshold Limit Concentration

Executive Summary

Hazard Management Services, a division of Forensic Analytical Consulting Services, Inc. (FACS) was retained by the Fresno Unified School District to perform a limited asbestos and lead paint survey of building materials in Building B and several portable classroom structures at Addams Elementary School, located at 2117 W. McKinley Avenue in Fresno, California. The survey was limited to suspect asbestos-containing materials and lead-containing paints or coatings which may be disturbed during renovation of Building B and relocation or demolition of 22 portable classrooms. A summary list of suspect asbestos-containing materials which were identified and sampled is included in Appendix A of this report. A table reporting lead-containing paints or coatings which were identified and tested is included in Appendix B of this report. The survey was performed between November 1 and November 5, 2018.

Asbestos

No asbestos-containing materials were identified at Building B.

The following materials were identified as asbestos-containing at portable structures:

- Exterior sealant at the seam between the metal framing and the wood wall panels at the sides of PCR 378, PCR 423, PCR 542, PCR 560, PCR 649, and PCR 650.
- Exterior sealant at the vertical seam between the metal framing separating building segments at the front and back sides of PCR 375, PCR 542, PCR 560, PCR 649, and PCR 650.
- Mastic dabs at fastening bolts on the roofs of PCR 375, PCR 542, PCR 560, PCR 649, PCR 650, and PCR L16 (approximately 500 bolts per roof)

Any suspect materials not included in this inspection must be assumed to be asbestos-containing materials until tested and proven not to contain asbestos.

Lead

Lead-based paints or coatings have lead content at or above 1.00 mg/cm^2, 5,000 parts per million, or 0.5% by weight. The following paints or coatings were identified as lead-based:

- Tan paint at wood window frames and sills at the exterior of Building B (7.60 – 8.10 mg/cm^2)
- Tan paint at metal windows at the exterior of Building B (4.00 mg/cm^2)

In addition to the lead-based paints or coatings listed above, several components in restroom areas have lead content above the lead-based threshold:

- Porcelain sink in Men's Restroom at Building B (11.00 mg/cm^2)

Lead was also detected in several other paints, coatings, or components at concentrations lower than lead-based. Detectable concentrations of lead were identified for the following items:

- Porcelain toilet in Men's and Nurse Restroom at Building B
- White paint at wood window components in Men's Restroom at Building B
- 6" Off-white ceramic wall tile in Nurse Restroom in Building B
- Brown paint at metal door frames at PCR 649 and PCR 650
- White and blue paint at metal doors at PCR 649 and PCR 650
- Tan paint at metal overhangs at PCR 649 and PCR 650
- Tan paint at metal downspouts at PCR 649 and PCR 650
- Blue paint at metal gutters and roof flashing at PCR 649 and PCR 650
- Blue paint at wood window trim at PCR 649 and PCR 650

- Blue paint at metal gutters and roof flashing at PCR 716
- White paint at metal doors at PCR 378 and PCR 423
- Brown paint at metal door frames at PCR 542
- Porcelain sinks and toilet at PCR 542
- Blue paint at metal doors at PCR L16
- Tan paint at wood walls at PCR L16
- Tan and blue paints at metal overhang at PCR L16
- Brown paint at metal doors at PCR L16
- White paint at metal doors and door frames at PCR L16
- Porcelain sink and toilet at PCR L16
- Blue paint at wood window trim at PCR 736, PCR 737, PCR 738, and PCR 739
- Tan paint at metal overhangs at PCR 736, PCR 737, PCR 738, and PCR 739
- Tan paint at metal HVAC housings at PCR 736, PCR 737, PCR 738, and PCR 739
- Tan paint at metal HVAC housing at PCR 375
- Tan paint at metal HVAC housing at PCR 560
- Tan paint at metal downspouts at PCR 560
- Tan paint at metal HVAC housing at PCR 940

Any untested paints or coatings not included in this inspection, or paints or coatings with unconfirmed 0.00 mg/cm^2 XRF test readings must be assumed to contain lead until tested and proven not to contain lead. 12 bulk paint chip samples were collected during the site assessment to verify XRF testing result; the following paints or coatings were found to not contain lead above the reporting limit for the samples analyzed, which can be considered “lead-free”:

- Blue paint at metal handrails
- Tan paint at wood exterior walls at PCR 375
- Blue paint at wood window trim at PCR 875
- Blue paint at wood door trim at PCR 1528
- Blue paint at metal door at PCR 1178
- Blue paint at metal door frames at PCR 649 and PCR 650
- Tan paint at metal downspouts at PCR 716
- Tan paint at wood exterior walls at PCR 316
- Tan paint at wood exterior walls at PCR 378
- Tan paint at exterior metal building frame and wood wall panels at PCR 542

FACS recommends that the results of this report be incorporated into any renovation plans provided for this project for informational purposes.

Introduction

Hazard Management Services, a division of Forensic Analytical Consulting Services, Inc. (FACS) was retained by the Fresno Unified School District to perform a limited asbestos and lead paint survey of building materials in Building B and several portable classroom structures at Addams Elementary School, located at 2117 W. McKinley Avenue in Fresno, California. The survey was limited to suspect asbestos-containing materials and lead-containing paints or coatings which may be disturbed during renovation of Building B and relocation or demolition of 22 portable classrooms. A summary list of suspect asbestos-containing materials which were identified and sampled is included in Appendix A of this report. A table reporting lead-containing paints or coatings which were identified and tested is included in Appendix B of this report. The survey was performed between November 1 and November 5, 2018.

Scope of Work

The purpose of this survey was to identify all asbestos-containing materials (ACMs) and lead-containing paints or coatings which may be disturbed as part of the renovation project impacting the administration areas at Building B, and relocation or demolition of portable classroom and restroom structures. The visual inspection, bulk sampling, XRF testing, and survey documentation were performed by Fred Tarazon and Jacob Sharp. Mr. Tarazon and Mr. Sharp are Department of Occupational Safety and Health (DOSH) Certified Site Surveillance Technicians (CSST # 16-5738 and CSST #16-5815), and California Department of Public Health (CDPH) Certified Lead Sampling Technicians (ST #27399 and ST #28717) working under the direction of Joseph Vuglia. Mr. Vuglia is a DOSH Certified Asbestos Consultant (CAC #13-5005) and CDPH Certified Lead Inspector / Risk Assessor (I/RA #22314), as required by California regulations. The scope of the survey and the services provided by FACS included:

- Review of architectural drawings showing extent of work in specified areas;
- Performing a visual inspection of the project areas to identify accessible suspect asbestos-containing materials (ACMs) that will be disturbed during the renovation project;
- Collection of bulk samples for asbestos analysis by polarized light microscopy (PLM);
- Testing of paints and coatings using an XRF analyzer to determine lead content;
- Ensuring the technical quality of all work by using Asbestos Hazard Emergency Response Act (AHERA) accredited Inspectors;
- Ensuring the technical quality of all work by using CDPH certified Lead Sampling Technicians and Inspector/Risk Assessors;
- Consolidating data and findings into a report format.

Site Characterization

Addams Elementary School is a typical school site located in Fresno, California. Permanent buildings are single-story, wood-framed structures on concrete with stucco walls and wood roof decks with asphalt shingle roofing. Portable classrooms and restroom structures are typical portable structures comprised of metal-framed building segments with wood wall panels, wood floor substrates, and foamed-over metal roofs. The construction history of permanent building was unknown to the inspectors; construction history of portable structures was determined by examining manufacturer's tags on the structures and the District's portable classroom inventory list. The survey was limited to materials being disturbed at the

Building B areas as depicted on architectural drawings provided by the District, and interior and exterior materials at the designated 22 portable structures being relocated or demolished.

Suspect asbestos-containing materials observed in the Building B survey areas include the following:

- Concrete
- Vinyl floor tile and mastic
- Carpet and glue
- Ceramic tile grout
- Vinyl baseboards and mastic
- Tackboard and glue
- Fiber reinforced panels and glue
- Drywall walls and ceilings
- Plaster
- False ceiling panels
- Sealant at porcelain fixtures
- Sink undercoating
- Stucco
- Window putty

Suspect asbestos-containing materials observed in the portable structures include the following:

- Carpet and glue
- Vinyl sheet flooring and mastic
- Vinyl baseboards and mastic
- Tackboard and glue
- Fiber reinforced panels and glue
- Drywall walls
- False ceiling panels
- Sealant at porcelain fixtures
- Sink undercoating
- Exterior sealants
- Roof mastic

Materials suspect for containing lead include all paints and coatings on project area surfaces, and also ceramic floor and wall tile, and porcelain items including drinking fountains, sinks, toilets, and urinals.

Survey Methods

Document Review

Architectural drawings produced and provided by Darden Architects were reviewed prior to conducting the survey to ascertain the extent of work involved in the Building B project areas. Reference documents, including the District's portable classroom inventory list, were reviewed to determined manufacturers and construction dates of portable structures; portable classroom information was verified on site during the survey.

Visual Inspection

Accessible building materials were visually inspected using the methods presented in the Federal AHERA regulations (40 CFR, Part 763). AHERA is required to be used for inspections of K-12 schools and is generally accepted as the industry standard for all ACM inspections regardless of structure or

facility type. Suspect ACMs were also physically assessed for friability, condition and possible disturbance factors.

All specified areas were accessible during this inspection. Other interior materials and exterior materials found in other areas at this site are not expected to be disturbed by the planned renovation and were not included in this survey.

Asbestos Inspection

Bulk Sample Collection

Bulk samples of identified homogeneous materials were collected in building areas that may be impacted by the planned renovation/demolition activities. Samples were collected of each separate homogeneous area (material). A homogeneous area (material) is defined as a surfacing material, thermal system insulation, or miscellaneous material that is uniform in use, color and texture. Examples of homogeneous areas could include:

Vinyl floor tiles
False ceiling panels
Drywall with joint compound
Vinyl sheet flooring

The specific number of samples collected was determined by using the methods required by the Federal AHERA regulations (40 CFR, Part 763.86) as noted below:

1) For Surfacing Material:
   1,000 ft^2 or less - collect 3 samples
   1,001 to 5,000 ft^2 - collect 5 samples
   5,001 ft^2 or greater - collect 7 samples

2) For Thermal System Insulation:
   “In a randomly distributed manner” - collect 3 samples
   6 linear feet of patching or less - collect 1 sample
   Cementitious pipe fittings - “In a manner sufficient to determine”

3) For all Miscellaneous Material:
   Collect samples "In a manner sufficient to determine whether material is ACM (asbestos-containing material) or not ACM..."

The suspect ACMs were sampled using a knife, chisel, scraper, drill or other similar coring device suitable to the type of material sampled to cut through its entire thickness and to ensure that a cross-section of the material was obtained. The material was then placed in an appropriately labeled container that was sealed and submitted to Forensic Analytical Laboratories, Inc. for analysis. A unique sample number (e.g. PJ39403-01A) was assigned to each sample.

Bulk samples will be retained by the laboratory for one month unless otherwise instructed. After this period, the samples will be disposed of appropriately.

Bulk Sample Analysis

A total of one hundred and sixty-five (165) bulk samples were collected during this survey. Bulk samples were analyzed by Forensic Analytical Laboratories, Inc. (FALI) in Hayward, California. FALI is accredited by the California Department of Public Health (CDPH) Environmental Laboratory Accreditation Program (ELAP) and the National Institute of Science and Technology's (NIST) National Voluntary Laboratory

Accreditation Program (NVLAP). FALI participates in the National Institute for Occupational Safety and Health (NIOSH) Proficiency Analytical Testing Program and has substantial experience in the analysis of asbestos.

All samples were analyzed using Polarized Light Microscopy with Dispersion Staining (PLM/DS) techniques in accordance with the methodology approved by the U.S. Environmental Protection Agency (EPA). The percentage of asbestos present in the samples was determined on the basis of a visual area estimation. The EPA defines asbestos-containing materials (ACM) as any material containing more than one percent (1%) asbestos as determined using the method specified in Appendix A, Subpart F, 40 CFR Part 763, Section 1, Polarized Light Microscopy (PLM). 40 CFR Part 763 identifies the lower limit of reliable quantification for asbestos using the PLM method as approximately one percent (1%) by volume. Regulations in California (CAL/OSHA Title 8 CCR 1529) define asbestos-containing construction materials (ACCM) as those materials having asbestos content of greater than one tenth of one percent (> 0.1%). Therefore, for the purpose of this survey, any amount of asbestos detected will be considered positive. In addition to the percentages, the types of asbestos minerals are also reported. The PLM method is the standard method used to analyze asbestos bulk samples.

When "None Detected" (ND) appears in the laboratory results, it should be interpreted as meaning asbestos was not observed in the sample material.

Lead Inspection

The client-defined lead inspection was conducted in accordance with the CDPH Lead-Related Construction Program and modeled upon the sampling protocol described in “Chapter 7: Lead Based Paint Inspection” of the HUD Guidelines for the Evaluation and Control of Lead-Based Paint Hazards in Housing (1997 Revision.)

Cal/OSHA, in Title 8 California Code of Regulations (CCR) Section 1532.1, Lead in Construction Standard which implements California Labor Code 8716-6717, regulates all construction work were an employee may be occupationally exposed to lead. Paint or materials with any detectable level of lead is considered lead-containing by Cal/OSHA.

For purposes of this report, materials containing lead shall be defined as materials that XRF testing has determined contain a lead content at or above 0.01 mg/cm^2, or 0.00 mg/cm^2 readings which have not been confirmed with laboratory analysis of bulk samples.

Construction work impacting materials with detectable levels of lead is subject to Cal/OSHA requirements. Construction activities, sometimes referred to as trigger tasks, impacting materials containing any amount of lead require an initial exposure assessment. Trigger tasks are defined in Cal/OSHA 1532.1, section (d) (2) and include but are not limited to such tasks as: manual demolition, manual scraping, manual sanding, lead burning, abrasive blasting, welding, cutting, and torch burning.

<u>XRF Testing Methodology</u>

Surfaces and components were surveyed for lead content utilizing a portable X-ray fluorescence (XRF) analyzer, Niton Model 300 XLp, serial number 22263. The XRF analyzer contains a radioactive cadmium source which bombards tested surfaces with X-rays and gamma rays. This external energy source excites any lead atoms within the tested paint or coating, causing their atoms to emit X-ray photons with a characteristic energy profile. The instrument analyzes the emitted energy to identify and quantify the amount of lead in the tested paint or coating, with lead content reported in milligrams per square centimeter.

Testing combinations of homogeneous components in one area are representative of similar components found in other areas. During this survey, the inspectors visually identified the painted or

coated component to test, an XRF reading was collected, and the reading was documented in the XRF data table contained in Appendix B. For each test reading, the data table identifies the room equivalent/space designation, the tested component name, the substrate material, the sample location, paint/coating color, condition assessment, and the XRF result expressed as lead content by weight in milligrams per square centimeter.

Findings and Recommendations

FACS' survey was limited to building materials associated with the specified restrooms. The following results were found regarding asbestos-containing materials and lead-containing paints, coatings or components in these restrooms:

Asbestos

None of the suspect materials identified in the Building B project areas included in this survey were found to be asbestos-containing materials.

The following materials have been identified as asbestos-containing at portable classroom and restroom structures:

- Exterior sealant at the seam between the metal framing and the wood wall panels at the sides of PCR 378, PCR 423, PCR 542, PCR 560, PCR 649, and PCR 650.
- Exterior sealant at the vertical seam between the metal framing separating building segments at the front and back sides of PCR 375, PCR 542, PCR 560, PCR 649, and PCR 650.
- Mastic dabs at fastening bolts on the roofs of PCR 375, PCR 542, PCR 560, PCR 649, PCR 650, and PCR L16 (approximately 500 bolts per roof)

Demolitions or renovations impacting building materials included in this inspection are regulated by the EPA National Emission Standards for Hazardous Air Pollutants (NESHAP). In order to comply with NESHAP, an asbestos notification must be submitted to the San Joaquin Valley Air Pollution Control District (SJVAPCD), along with renovation/demolition permit release and a copy of this survey.

If any concealed suspect materials are discovered or if any other suspect materials are present which were not included in this report, they must be presumed to be asbestos-containing materials until such time as they are tested and proven not to contain asbestos.

Asbestos-containing materials identified at portable structures which will be impacted by renovation work or demolition of the structures must be removed by a contractor with the proper Contractor State Licensing Board license for the work to be performed and Division of Occupational Safety and Health registration for asbestos work. For portable structures being relocated, only the asbestos-containing materials to be disturbed during separation of building segments need be removed. Workers impacting asbestos must have the required training and AHERA-accreditation as an asbestos worker or supervisor, with at least one worker trained and accredited as a supervisor.

Lead

Detectable concentrations of lead were identified in several of the paints, coatings and components which will be impacted during the project, and this project is thus regulated by Cal/OSHA (8 CCR 1532.1). Some paints, coatings or components in project areas were found to have high concentrations of lead, above the 1.00 mg/cm^2 lead-based threshold.

A contractor who has employees that may be occupationally exposed to lead during this project must perform an initial determination regarding worker exposures to lead, which may be based on personal air monitoring at the start of the project, prior employee monitoring from the past 12 months under workplace conditions closely resembling the current project, or objective data demonstrating that exposures will not exceed the Cal/OSHA action level (30 micrograms per cubic meter of air). It is the contractor's responsibility to conduct their initial determination and comply with any relevant Cal/OSHA requirements.

Workers disturbing lead during this project must have lead awareness or action level training depending on the initial exposure determination and lead-safe work practices must be used. Disturbance of lead-containing paints or coatings must be performed within a contained area to prevent the spread and build-up of lead dust in order to comply with CDPH requirements. HEPA vacuums, dustless tools or shrouds, and/or intact removal of components should be employed to minimize lead dust generation and properly cleanup work areas following disturbance to lead-containing materials during this project. Waste generated during disturbance to lead-containing materials must be profiled in a hazardous waste determination to ascertain proper disposal requirements.

If the initial determination or initial exposure monitoring shows that workers impacting lead can be expected to be or are shown to be exposed to lead above the Cal/OSHA permissible exposure level (50 micrograms per cubic meter of air) workers and supervisors must have the requisite training and CDPH lead worker or supervisor certification.

EPA Renovation, Repair and Painting Rule

The EPA's Renovation, Repair, and Painting (RRP) rule applies to disturbance of lead-based paints at child-occupied facilities constructed before 1978. In the context of the RRP rule, child-occupied facility is defined as visited by the same child under the age of 6 on two or more days per week for at least 3 hours per visit with a cumulative annual total of 60 hours. Lead-based paint was identified at Building B window components. Building B was constructed in 1948, and the site is an elementary school which has the potential for this structure to be classified as a child-occupied facility. It is FACS recommendation to treat the removal of the windows, as referenced on the supplied architectural drawings, as covered under the RRP rule.

The RRP rule requires that contracting firms must have EPA RRP firm certification. RRP firm certification is required for the general contractor, regardless of whether their workers disturb the lead-based paint, and the sub-contractors(s) who will perform the actual lead-based paint disturbance. In addition, the lead-based paint disturbance must be supervised by a worker with training and certification under the RRP rule as a Certified Renovator; other workers disturbing lead-based paint need informal training regarding the RRP rule and its requirements, which the Certified Renovator can provide. The RRP rule also requires containment of lead work areas, lead-safe work practices, and proper clean-up following the work, including cleaning verification wipe sampling.

Limitations

This investigation is limited to the conditions and practices observed and information made available to FACS. The methods, conclusions and recommendations provided are based on FACS' judgment, expertise and the standard of practice for professional service. They are subject to the limitations and variability inherent in the methodology employed. As with all environmental investigations, this investigation is limited to the defined scope and does not purport to set forth all hazards, nor indicate that other hazards do not exist.

Please do not hesitate to contact our office at 559-436-0277 with any questions or concerns. Thank you for the opportunity to assist Fresno Unified School District with promoting worker, staff and student safety and a healthy environment.

Respectfully,
FORENSIC ANALYTICAL

Joseph M. Vuglia
Project Manager, Fresno
Cal/OSHA CAC #13-5005
CDPH I/RA, M #22314

Reviewed by:
FORENSIC ANALYTICAL

Chris Chipponeri
Director, HMS
Cal/OSHA CAC #10-4633
CDPH I/RA #20476

Appendix A

Asbestos Sampling Summary, Asbestos Bulk Sample Chain of Custody and Laboratory Results Report

Asbestos Survey Summary (Lab Report # B268328) Addams Elementary School, 2117 W. McKinley Ave., Fresno, California Survey Date: November 1-5, 2018						
Sample Numbers	**Material Description**	**Location(s) of Material**	**Material Number**	**Asbestos Content (percent)**	**Asbestos NESHAP Category**	**Approximate Quantity**
01A	16" Vinyl floor tile (white & blue) & mastic	Building B: Administration, Nurse	1	None detected in tile None detected in mastic	N/A	N/A
02A	6" Vinyl baseboard (off-white) & mastic	Building B: Administration	2	None detected in baseboard None detected in mastic	N/A	N/A
03A	Tackboard & glue	Building B: Administration, Principal, Vice-Principal 1, Vice-Principal 2, Home School	3	None detected in tackboard None detected in glue	N/A	N/A
04A	2'x2' False ceiling panel (small fissure & pinhole)	Building B: Administration, Principal, Vice-Principal 1, Vice-Principal 2, Work Room, Hallway, Home School	4	None detected in ceiling panel None detected in paint	N/A	N/A
05A, 05B	Carpet (grey/blue) & mastic, with floor filler	Building B: Administration, Principal, Vice-Principal 1, Vice-Principal 2, Home School, Work Area, Hallway, Storage	5	None detected in carpet None detected in glue None detected in floor filler	N/A	N/A
06A	4" Carpet baseboard (grey/blue)	Building B: Administration, Vice-Principal 2, Home School, Storage	6	None detected in carpet	N/A	N/A
07A	8" Carpet baseboard (grey/blue) & mastic	Building B: Principal, Vice-Principal 1, Work Area, Hallway	7	None detected in carpet None detected in mastic None detected in paint	N/A	N/A
08A, 08B	Drywall (smooth)	Building B: Administration, Principal, Vice-Principal 1, Vice-Principal 2, Home School, Storage	8	None detected in drywall None detected in joint compound None detected in tape None detected in texture None detected in paint	N/A	N/A

Asbestos Survey Summary (Lab Report # B268328) Addams Elementary School, 2117 W. McKinley Ave., Fresno, California Survey Date: November 1-5, 2018						
Sample Numbers	**Material Description**	**Location(s) of Material**	**Material Number**	**Asbestos Content (percent)**	**Asbestos NESHAP Category**	**Approximate Quantity**
09A, 09B, 09C	Plaster (sanded)	Building B: Nurse, Hallway, Storage, Work Room, Unisex Restroom, Women's Restroom	9	None detected in plaster None detected in paint	N/A	N/A
10A	Concrete	Building B: Unisex Restroom, Women's Restroom	10	None detected in concrete	N/A	N/A
11A	Fiber reinforced panel & glue	Building B: Nurse Restroom, Unisex Restroom, Women's Restroom	11	None detected in panel None detected in glue	N/A	N/A
12A, 12B	Drywall (smooth)	Building B: Unisex Restroom, Women's Restroom	12	None detected in drywall None detected in joint compound None detected in paint	N/A	N/A
13A	Sealant (white) at sink	Building B: Unisex Restroom	13	None detected in sealant	N/A	N/A
14A	Grout at toilet	Building B: Unisex Restroom	14	None detected in grout	N/A	N/A
15A	Sealant (white) at sink	Building B: Nurse Restroom, Women's Restroom	15	None detected in sealant	N/A	N/A
16A	Sealant (white) at toilet	Building B: Nurse Restroom, Women's Restroom	16	None detected in sealant	N/A	N/A
17A, 17B, 17C	Plaster (smooth)	Building B: Nurse, Nurse Restroom, Work Area	17	None detected in drywall None detected in plaster None detected in paint	N/A	N/A
18A	4" Vinyl baseboard (cream) & mastic	Building B: Nurse	18	None detected in baseboard None detected in mastic	N/A	N/A
19A	2" Ceramic floor tile (grey) grout	Building B: Nurse Restroom	19	None detected in grout	N/A	N/A
20A	4" Ceramic wall tile (beige) grout	Building B: Nurse Restroom	20	None detected in grout	N/A	N/A

Asbestos Survey Summary (Lab Report # B268328) Addams Elementary School, 2117 W. McKinley Ave., Fresno, California Survey Date: November 1-5, 2018						
Sample Numbers	**Material Description**	**Location(s) of Material**	**Material Number**	**Asbestos Content (percent)**	**Asbestos NESHAP Category**	**Approximate Quantity**
21A	Sink undercoating (black)	Building B: Hallway	21	None detected in coating	N/A	N/A
22A	Stucco	Building B: Exterior	22	None detected in grey stucco None detected in white stucco None detected in paint	N/A	N/A
23A	Window Putty	Building B: Exterior	23	None detected in putty None detected in paint	N/A	N/A
24A	Carpet (brown) & glue	PCR 736, PCR 737, PCR 738, PCR 739	24	None detected in carpet None detected in glue	N/A	N/A
25A	4” Vinyl baseboard (brown) & mastic	PCR 736, PCR 737, PCR 738, PCR 739	25	None detected in baseboard None detected in mastic	N/A	N/A
26A, 26B	Tackboard & glue on drywall	PCR 736, PCR 737, PCR 738, PCR 739	26	None detected in drywall None detected in tackboard None detected in glue	N/A	N/A
27A	2’x4’ False ceiling panel (fiberglass)	PCR 736, PCR 737, PCR 738, PCR 739	27	None detected in fiberglass panel None detected in vinyl cover	N/A	N/A
28A	Carpet (purple) & glue	PCR 940	28	None detected in carpet None detected in glue	N/A	N/A
29A	4” Vinyl baseboard (green) & mastic	PCR 940	29	None detected in baseboard None detected in mastic	N/A	N/A
30A, 30B	Tackboard & glue on drywall	PCR 940	30	None detected in drywall None detected in tackboard None detected in glue	N/A	N/A
31A	2’x4’ False ceiling panel (fiberglass)	PCR 940	31	None detected in fiberglass panel None detected in vinyl cover	N/A	N/A
32A	Sink undercoating (black)	PCR 940	32	None detected in coating	N/A	N/A
33A	Carpet (purple) & glue	PCR 560	33	None detected in carpet None detected in glue	N/A	N/A
34A	4” Vinyl baseboard (green) & mastic	PCR 560	34	None detected in baseboard None detected in mastic	N/A	N/A
35A, 35B	Tackboard & glue on drywall	PCR 560	35	None detected in drywall None detected in tackboard None detected in glue	N/A	N/A

Asbestos Survey Summary (Lab Report # B268328) Addams Elementary School, 2117 W. McKinley Ave., Fresno, California Survey Date: November 1-5, 2018						
Sample Numbers	**Material Description**	**Location(s) of Material**	**Material Number**	**Asbestos Content (percent)**	**Asbestos NESHAP Category**	**Approximate Quantity**
36A	2'x4' False ceiling panel (fiberglass)	PCR 560	36	None detected in fiberglass panel None detected in vinyl cover	N/A	N/A
37A	Sink undercoating (black)	PCR 560	37	None detected in coating	N/A	N/A
38A	Carpet (purple) & glue	PCR 375	38	None detected in carpet None detected in glue	N/A	N/A
39A	4" Vinyl baseboard (green) & mastic	PCR 375	39	None detected in baseboard None detected in mastic	N/A	N/A
40A, 40B	Tackboard & glue on drywall	PCR 375	40	None detected in drywall None detected in tackboard None detected in glue	N/A	N/A
41A	2'x4' False ceiling panel (fissure & pinhole)	PCR 375	41	None detected in ceiling panel None detected in paint	N/A	N/A
42A	Sink undercoating (black)	PCR 375	42	None detected in coating	N/A	N/A
43A	Carpet (purple) & glue	PCR 875	43	None detected in carpet None detected in glue	N/A	N/A
44A	4" Vinyl baseboard (green) & mastic	PCR 875	44	None detected in baseboard None detected in mastic	N/A	N/A
45A, 45B	Tackboard & glue on drywall	PCR 875	45	None detected in drywall None detected in tackboard None detected in glue	N/A	N/A
46A	2'x4' False ceiling panel (fiberglass)	PCR 875	46	None detected in fiberglass panel None detected in vinyl cover	N/A	N/A
47A	Sink undercoating (black)	PCR 875	47	None detected in coating	N/A	N/A
48A	Vinyl sheet flooring (blue pebble) & mastic	PCR 1528: Men's Restroom, Women's Restroom	48	None detected in vinyl None detected in fibrous backing None detected in backing layer None detected in mastic	N/A	N/A
49A	6" Vinyl baseboard (black) & mastic	PCR 1528: Men's Restroom, Women's Restroom	49	None detected in baseboard None detected in mastic	N/A	N/A

Asbestos Survey Summary (Lab Report # B268328) Addams Elementary School, 2117 W. McKinley Ave., Fresno, California Survey Date: November 1-5, 2018						
Sample Numbers	**Material Description**	**Location(s) of Material**	**Material Number**	**Asbestos Content (percent)**	**Asbestos NESHAP Category**	**Approximate Quantity**
50A, 50B	Fiber reinforced panel & glue on drywall	PCR 1528: Men's Restroom, Women's Restroom	50	None detected in drywall None detected in panel None detected in glue	N/A	N/A
51A	2'x4' False ceiling panel (microdots)	PCR 1528: Men's Restroom, Women's Restroom	51	None detected in ceiling panel None detected in paint	N/A	N/A
52A	Sealant (white, at sinks, toilets, urinals)	PCR 1528: Men's Restroom, Women's Restroom	52	None detected in sealant	N/A	N/A
53A	Carpet (grey) & glue	PCR 1176, PCR 1177, PCR 1178, PCR 1179, PCR 1180	53	None detected in carpet None detected in glue	N/A	N/A
54A	4" Vinyl baseboard (grey) & mastic	PCR 1176, PCR 1177, PCR 1178, PCR 1179, PCR 1180	54	None detected in baseboard None detected in mastic	N/A	N/A
55A, 55B	Tackboard & glue on drywall	PCR 1176, PCR 1177, PCR 1178, PCR 1179, PCR 1180	55	None detected in drywall None detected in tackboard None detected in glue	N/A	N/A
56A	2'x4' False ceiling panel (fiberglass)	PCR 1176, PCR 1177, PCR 1178, PCR 1179, PCR 1180	56	None detected in fiberglass panel None detected in vinyl cover	N/A	N/A
57A	Sink undercoating (black)	PCR 1176, PCR 1177, PCR 1178, PCR 1179, PCR 1180	57	None detected in coating	N/A	N/A
58A	Carpet (brown) & glue	PCR 716	58	None detected in carpet None detected in glue	N/A	N/A
59A	4" Vinyl baseboard (brown) & mastic	PCR 716	59	None detected in baseboard None detected in mastic	N/A	N/A
60A, 60B	Tackboard & glue on drywall	PCR 716	60	None detected in drywall None detected in tackboard None detected in glue	N/A	N/A
61A	2'x4' False ceiling panel (fiberglass)	PCR 716	61	None detected in fiberglass panel None detected in vinyl cover	N/A	N/A

Asbestos Survey Summary (Lab Report # B268328) Addams Elementary School, 2117 W. McKinley Ave., Fresno, California Survey Date: November 1-5, 2018						
Sample Numbers	**Material Description**	**Location(s) of Material**	**Material Number**	**Asbestos Content (percent)**	**Asbestos NESHAP Category**	**Approximate Quantity**
62A	Sink undercoating (black)	PCR 716	62	None detected in coating	N/A	N/A
63A	Carpet (brown) & glue	PCR 649, PCR 650	63	None detected in carpet None detected in glue	N/A	N/A
64A	4" Vinyl baseboard (brown) & mastic	PCR 649, PCR 650	64	None detected in baseboard None detected in mastic	N/A	N/A
65A	Tackboard & glue on drywall	PCR 649, PCR 650	65	None detected in drywall None detected in tackboard None detected in glue	N/A	N/A
66A	2'x4' False ceiling panel (fiberglass)	PCR 649, PCR 650	66	None detected in fiberglass panel None detected in vinyl cover	N/A	N/A
67A	Sink undercoating (black)	PCR 649, PCR 650	67	None detected in coating	N/A	N/A
68A	Carpet (green) & glue	PCR 316	68	None detected in carpet None detected in glue None detected in floor filler	N/A	N/A
69A	4" Vinyl baseboard (green) & mastic	PCR 316	69	None detected in baseboard None detected in mastic	N/A	N/A
70A	Tackboard & glue on drywall	PCR 316	70	None detected in drywall None detected in tackboard None detected in glue	N/A	N/A
71A	2'x4' False ceiling panel (heavy texture)	PCR 316	71	None detected in ceiling panel None detected in paint	N/A	N/A
72A	Sink undercoating (black)	PCR 316	72	None detected in coating	N/A	N/A
73A	Carpet (green) & glue	PCR 378	73	None detected in carpet None detected in glue	N/A	N/A
74A	4" Vinyl baseboard (green) & mastic	PCR 378	74	None detected in baseboard None detected in mastic	N/A	N/A
75A, 75B	Tackboard & glue on drywall	PCR 378, PCR 423	75	None detected in drywall None detected in tackboard None detected in glue	N/A	N/A
76A	2'x4' False ceiling panel (heavy texture)	PCR 378, PCR 423	76	None detected in fiberglass panel None detected in vinyl cover	N/A	N/A
77A	Sink undercoating (black)	PCR 378, PCR 423	77	None detected in coating	N/A	N/A

Asbestos Survey Summary (Lab Report # B268328) Addams Elementary School, 2117 W. McKinley Ave., Fresno, California Survey Date: November 1-5, 2018						
Sample Numbers	**Material Description**	**Location(s) of Material**	**Material Number**	**Asbestos Content (percent)**	**Asbestos NESHAP Category**	**Approximate Quantity**
78A	Carpet (brown) & mastic	PCR 423	78	None detected in carpet None detected in glue	N/A	N/A
79A	4" Vinyl baseboard (brown) & mastic	PCR 423	79	None detected in baseboard None detected in mastic	N/A	N/A
80A	Sink undercoating (black)	PCR 736, PCR 737, PCR 738, PCR 739	80	None detected in coating	N/A	N/A
81A	2'x4' False ceiling panel (fissure & pinhole)	PCR 875	81	None detected in ceiling panel None detected in paint	N/A	N/A
82A	Sealant (white, at sinks, toilets, urinals)	PCR 542: Restroom	82	None detected in sealant	N/A	N/A
83A	Carpet (grey) & mastic	PCR 542: Classroom	83	None detected in carpet None detected in glue	N/A	N/A
84A	4" Vinyl baseboard (grey) & mastic	PCR 542: Classroom, Closet	84	None detected in baseboard None detected in mastic	N/A	N/A
85A, 85B	Tackboard on drywall	PCR 542: Classroom, Closet	85	None detected in drywall None detected in tackboard	N/A	N/A
86A	2'x4' False ceiling panel (fiberglass)	PCR 542: Classroom, Restroom, Closet	86	None detected in ceiling panel None detected in paint	N/A	N/A
87A	Vinyl sheet flooring (blue pebble) & mastic	PCR 542: Classroom, Restroom	87	None detected in vinyl None detected in backing layer None detected in mastic	N/A	N/A
88A	6" Vinyl baseboard (grey) & mastic	PCR 542: Classroom, Restroom	88	None detected in baseboard None detected in mastic	N/A	N/A
89A, 89B	Fiber reinforced panel & glue on drywall	PCR 542: Classroom	89	None detected in drywall None detected in panel None detected in glue	N/A	N/A
90A	Vinyl sheet flooring (cream pebble) & mastic	PCR 542: Classroom	90	None detected in vinyl None detected in backing layer None detected in mastic	N/A	N/A
91A	Carpet (grey) & mastic	PCR L16: Classroom	91	None detected in carpet None detected in glue	N/A	N/A
92A	4" Vinyl baseboard (blue) & mastic	PCR L16: Classroom	92	None detected in baseboard None detected in mastic	N/A	N/A

Asbestos Survey Summary (Lab Report # B268328) Addams Elementary School, 2117 W. McKinley Ave., Fresno, California Survey Date: November 1-5, 2018						
Sample Numbers	**Material Description**	**Location(s) of Material**	**Material Number**	**Asbestos Content (percent)**	**Asbestos NESHAP Category**	**Approximate Quantity**
93A, 93B	Tackboard	PCR L16: Classroom	93	None detected in tackboard None detected in paint	N/A	N/A
94A	2'x4' False ceiling panel (fiberglass)	PCR L16: Classroom	94	None detected in fiberglass panel None detected in vinyl cover	N/A	N/A
95A	Sink undercoating (black)	PCR L16: Classroom	95	None detected in coating	N/A	N/A
96A	Vinyl sheet flooring (cream) & mastic	PCR L16: Restroom	96	None detected in vinyl None detected in backing layer None detected in mastic None detected in floor filler	N/A	N/A
97A	6" Vinyl baseboard (blue) & mastic	PCR L16: Restroom	97	None detected in baseboard None detected in mastic	N/A	N/A
98A, 98B	Fiber reinforced panel & glue on drywall	PCR L16: Restroom	98	None detected in drywall None detected in panel None detected in glue	N/A	N/A
99A	2'x4' False ceiling panel	PCR L16: Restroom	99	None detected in ceiling panel None detected in paint	N/A	N/A
100A	Sealant (white, at sinks, toilets, urinals)	PCR L16: Restroom	100	None detected in sealant None detected in paint	N/A	N/A
101A	Sealant seam at frame/wall panel)	PCR 316: Exterior	101	None detected in sealant None detected in paint	N/A	N/A
102A	Sealant (vertical frame segment seam)	PCR 316: Exterior	102	None detected in sealant None detected in paint	N/A	N/A
103A	Sealant (seam at frame/wall panel)	PCR 649: Exterior PCR 650: Exterior	103	2% Chrysotile in sealant None detected in paint	Category II, non-friable	680 LF
104A	Sealant (vertical frame segment seam)	PCR 649: Exterior PCR 650: Exterior	104	2% Chrysotile in sealant None detected in paint	Category II, non-friable	40 LF
105A	Sealant (seam at frame/wall panel)	PCR 716: Exterior	105	None detected in sealant None detected in paint	N/A	N/A
106A	Sealant (vertical frame segment seam)	PCR 716: Exterior	106	None detected in sealant None detected in paint	N/A	N/A

Asbestos Survey Summary (Lab Report # B268328) Addams Elementary School, 2117 W. McKinley Ave., Fresno, California Survey Date: November 1-5, 2018						
Sample Numbers	**Material Description**	**Location(s) of Material**	**Material Number**	**Asbestos Content (percent)**	**Asbestos NESHAP Category**	**Approximate Quantity**
107A	Sealant (seam at frame/wall panel)	PCR 1176: Exterior PCR 1177: Exterior PCR 1178: Exterior PCR 1179: Exterior PCR 1180: Exterior	107	None detected in sealant	N/A	N/A
108A	Sealant (horizontal seam at ground/frame)	PCR 1176: Exterior PCR 1177: Exterior PCR 1178: Exterior PCR 1179: Exterior PCR 1180: Exterior	108	None detected in sealant None detected in paint	N/A	N/A
109A	Sealant (behind door & window trim)	PCR 1528: Exterior	109	None detected in sealant None detected in paint	N/A	N/A
110A	Sealant (seam at frame/wall panel)	PCR 875: Exterior	110	None detected in sealant None detected in paint	N/A	N/A
111A	Sealant (vertical frame segment seam)	PCR 875: Exterior	111	None detected in sealant None detected in paint	N/A	N/A
112A	Sealant (seam at frame/wall panel)	PCR 736: Exterior PCR 737: Exterior PCR 738: Exterior PCR 739: Exterior	112	None detected in sealant None detected in paint	N/A	N/A
113A	Sealant (vertical frame segment seam)	PCR 739: Exterior	113	None detected in sealant None detected in paint	N/A	N/A
114A	Sealant (seam at frame/wall panel)	PCR 560: Exterior	114	2% Chrysotile in sealant None detected in paint	Category II, non-friable	340 LF
115A	Sealant (vertical frame segment seam)	PCR 560: Exterior	115	2% Chrysotile in sealant None detected in paint	Category II, non-friable	20 LF
116A	Sealant (seam at frame/wall panel)	PCR 940: Exterior	116	None detected in sealant None detected in paint	N/A	N/A
117A	Sealant (vertical frame segment seam)	PCR 940: Exterior	117	None detected in sealant None detected in paint	N/A	N/A
118A	Sealant (seam at frame/wall panel)	PCR 375: Exterior	118	None detected in sealant None detected in paint	N/A	N/A
119A	Sealant (vertical frame segment seam)	PCR 375: Exterior	119	2% Chrysotile in sealant None detected in paint	Category II, non-friable	20 LF

Asbestos Survey Summary (Lab Report # B268328) Addams Elementary School, 2117 W. McKinley Ave., Fresno, California Survey Date: November 1-5, 2018						
Sample Numbers	**Material Description**	**Location(s) of Material**	**Material Number**	**Asbestos Content (percent)**	**Asbestos NESHAP Category**	**Approximate Quantity**
120A	Sealant (seam at frame/wall panel)	PCR 378: Exterior PCR 423: Exterior	120	2% Chrysotile in sealant None detected in paint	Category II, non-friable	680 LF
121A	Sealant (vertical frame segment seam)	PCR 378: Exterior PCR 423: Exterior	121	None detected in sealant None detected in paint	N/A	N/A
122A	Sealant (seam at frame/wall panel)	PCR 542: Exterior	122	2% Chrysotile in sealant None detected in paint	Category II, non-friable	680 LF
123A, 123B	Sealant (vertical frame segment seam)	PCR 542: Exterior	123	2% Chrysotile in sealant None detected in paint	Category II, non-friable	20 LF
124A	Paint (textured)	PCR L16: Exterior	124	None detected in texture None detected in paint	N/A	N/A
125A	Sealant (horizontal seam at frame/ground)	PCR L16: Exterior	125	None detected in sealant None detected in paint	N/A	N/A
126A	Sealant (seam at frame/wall panel)	PCR L16: Exterior	126	None detected in sealant None detected in paint	N/A	N/A
127A	Sealant (vertical frame segment seam)	PCR L16: Exterior	127	None detected in sealant None detected in paint	N/A	N/A
128A	Sealant (behind door & window trim)	PCR L16: Exterior	128	None detected in sealant None detected in paint	N/A	N/A
129A	Fibrous wall coating	PCR L16: Exterior	129	None detected in coating None detected in paint	N/A	N/A
130A	Mastic (at roof perimeter)	PCR 316: Roof	130	None detected in mastic	N/A	N/A
131A	Fibrous repair cloth	PCR 316: Roof	131	None detected in repair cloth	N/A	N/A
132A	Mastic (at roof bolts)	PCR 649: Roof PCR 650: Roof	132	2% Chrysotile in mastic None detected in paint	Category I, non-friable	24 ft^2
133A	Mastic (at roof bolts)	PCR 716: Roof	133	None detected in mastic None detected in paint	N/A	N/A
134A	Mastic (at roof bolts)	PCR 1176: Roof PCR 1177: Roof PCR 1178: Roof PCR 1179: Roof PCR 1180: Roof	134	None detected in mastic None detected in paint	N/A	N/A

Asbestos Survey Summary (Lab Report # B268328) Addams Elementary School, 2117 W. McKinley Ave., Fresno, California Survey Date: November 1-5, 2018						
Sample Numbers	**Material Description**	**Location(s) of Material**	**Material Number**	**Asbestos Content (percent)**	**Asbestos NESHAP Category**	**Approximate Quantity**
135A	Mastic (at roof bolts)	PCR 1528: Roof	135	None detected in mastic None detected in paint	N/A	N/A
136A	Mastic (at roof bolts)	PCR 875: Roof	136	None detected in mastic None detected in foam None detected in paint	N/A	N/A
137A	Mastic (at roof bolts)	PCR 736: Roof PCR 737: Roof PCR 738: Roof PCR 739: Roof	137	None detected in mastic None detected in foam None detected in paint	N/A	N/A
138A	Mastic (at roof bolts)	PCR 560: Roof	138	2% Chrysotile in mastic None detected in foam None detected in paint	Category I, non-friable	12 ft^2
139A	Mastic (at roof bolts)	PCR 940: Roof	139	None detected in mastic None detected in foam None detected in paint	N/A	N/A
140A	Mastic (at roof bolts)	PCR 375: Roof	140	2% Chrysotile in mastic None detected in paint	Category I, non-friable	12 ft^2
141A	Mastic (at roof bolts)	PCR 375: Roof	141	None detected in mastic None detected in paint	N/A	N/A
142A	Mastic (at roof bolts)	PCR 378: Roof PCR 423: Roof	142	None detected in mastic None detected in foam None detected in paint	N/A	N/A
143A	Mastic (at roof bolts)	PCR 542: Roof	143	2% Chrysotile in mastic None detected in paint	Category I, non-friable	12 ft^2
144A	Mastic (at roof bolts)	PCR L16: Roof	144	2% Chrysotile in mastic None detected in foam None detected in paint	Category I, non-friable	12 ft^2

FACS

SAMPLING DATA FORM & CHAIN OF CUSTODY

CLIENT: **FR09 FACS Fresno** **FRESNO UNIFIED SCHOOL DISTRICT**	**Sampled by: Jacob Sharp and Eric Farnsworth**	**Sample Date: 11-01-18-11-02-18**
Site/Bldg.: FRESNO UNIFIED SCHOOL DISTRICT Addams Elementary School 2117 W. McKinley Ave Fresno CA 93728	**Turnaround Time:** 48 hr **Analysis: PLM Standard**	
FACS Proj. No.: PJ39403	**Special Instructions** E-mail results to E-mail results to jvuglia@forensicanalytical.com and dpyle@forensicanalytical.com	

HA#	Homogeneous Material Description (incl. color, texture, phase of construction)	Quant. in SF (LF for small pipe only)	Friable/ Cat. I/ Cat. II	Condition (good, fair, poor)	Sample Number	Sample Location	Lab Result (when rcvd)
01	16" Vinyl Floor Tile (white with blue specks) with mastic				PJ39403 -01A	Building B: Admin – south side west end	
02	6" Vinyl Baseboard (off-white) with mastic				PJ39403 -02A	Building B: Admin – north side west end	
03	Tackboard over Drywall				PJ39403 -03A	Building B: Admin – west side center above FCP's	
04	2' X 2' False Ceiling Panel (small fissure pinhole)				PJ39403 -04A	Building B: Hallway- east side south end	
05	Carpet (gray/blue) and mastic				PJ39403 -05A	Building B: Home School – south side west end	
05	Carpet (gray/blue) and mastic with filler				PJ39403 -05B	Building B: Work Area – south side east end	
06	4" Carpet (gray/blue) Baseboard and mastic				PJ39403 -06A	Building B: Storage – south side west end	
07	8" Carpet (gray/blue) Baseboard and mastic				PJ39403 -07A	Building B: Work Area – east side south end	
08	Drywall (Smooth) with Tape and Joint Compound				PJ39403 -08A	Building B: Storage – north side east end	

DW = Drywall JC = Joint Compound WT = Wall Texture VFT = Vinyl Floor Tile VSF = Vinyl Sheet Flooring BB = Baseboard BBM = Baseboard Mastic CM = Carpet Mastic ACT = Acoustic Ceiling Tile ACS = Sprayed-on Acoustical Ceiling Material FP = Fireproofing PI = Pipe Insulation PFI = Pipe fitting insulation WP = Plaster CP = Ceiling Plaster ES = Exterior Stucco

Relinquished by: **Date & Time** 15:00 11/06/18	**Relinquished by:** **Date & Time:**	**Relinquished by:** **Date & Time:**
Received by: **Date & Time**	**Received by:** **Date & Time**	**Relinquished by:** **Date & Time:**

11am RECEIVED NOV 07 2018

FACS

SAMPLING DATA FORM & CHAIN OF CUSTODY

CLIENT: **FR09 FACS Fresno** **FRESNO UNIFIED SCHOOL DISTRICT**	**Sampled by: Jacob Sharp and Eric Farnsworth**	**Sample Date: 11-01-18-11-02-18**
Site/Bldg.: FRESNO UNIFIED SCHOOL DISTRICT Addams Elementary School 2117 W. McKinley Ave Fresno CA 93728	**Turnaround Time:** 48 hr **Analysis: PLM Standard**	
FACS Proj. No.: PJ39403	**Special Instructions** E-mail results to E-mail results to jvuglia@forensicanalytical.com and dpyle@forensicanalytical.com	

HA#	Homogeneous Material Description (incl. color, texture, phase of construction)	Quant. in SF (LF for small pipe only)	Friable/ Cat. I/ Cat. II	Condition (good, fair, poor)	Sample Number	Sample Location	Lab Result (when rcvd)
08	Drywall (Smooth) without Tape and Joint Compound				PJ39403 -08B	Building B: Storage – north side east end	
09	Plaster (Sanded) on the Ceiling				PJ39403 -09A	Building B: Storage – north side east end	
09	Plaster (Sanded) on the Wall				PJ39403 -09B	Building B: Storage – south side west end	
09	Plaster (Sanded) on the Wall				PJ39403 -09C	Building B: Hallway – north side east end	
10	Concrete (blue/green) (Sanded)				PJ39403 -10A	Building B: Unisex Restroom – south side east end	
11	Fiber Reinforced Panels and glue over Drywall				PJ39403 -11A	Building B: Nurse's Restroom – north side west end	
12	Drywall (Smooth) with tape and joint compound				PJ39403 -12A	Building B: Unisex Restroom – south side west end	
12	Drywall (Smooth) without tape and joint compound				PJ39403 -12B	Building B: Unisex Restroom – south side west end	
13	Sealant (white) on sink				PJ39403 -13A	Building B: Unisex Restroom – east side south end	

DW = Drywall JC = Joint Compound WT = Wall Texture VFT = Vinyl Floor Tile VSF = Vinyl Sheet Flooring BB = Baseboard BBM = Baseboard Mastic CM = Carpet Mastic ACT = Acoustic Ceiling Tile ACS = Sprayed-on Acoustical Ceiling Material FP = Fireproofing PI = Pipe Insulation PFI = Pipe fitting insulation WP = Plaster CP = Ceiling Plaster ES = Exterior Stucco

Relinquished by: JSharp **Date & Time** 15:00 11/06/18	**Relinquished by:** **Date & Time:**	**Relinquished by:** **Date & Time:**
Received by: **Date & Time**	**Received by:** **Date & Time**	**Relinquished by:** **Date & Time:**

RECEIVED NOV 07 2018

FACS

SAMPLING DATA FORM & CHAIN OF CUSTODY

CLIENT: **FR09 FACS Fresno** **FRESNO UNIFIED SCHOOL DISTRICT**	**Sampled by: Jacob Sharp and Eric Farnsworth**	**Sample Date: 11-01-18-11-02-18**
Site/Bldg.: FRESNO UNIFIED SCHOOL DISTRICT Addams Elementary School 2117 W. McKinley Ave Fresno CA 93728	**Turnaround Time:** 48 hr **Analysis: PLM Standard**	
FACS Proj. No.: PJ39403	**Special Instructions** E-mail results to E-mail results to jvuglia@forensicanalytical.com and dpyle@forensicanalytical.com	

HA#	Homogeneous Material Description (incl. color, texture, phase of construction)	Quant. in SF (LF for small pipe only)	Friable/ Cat. I/ Cat. II	Condition (good, fair, poor)	Sample Number	Sample Location	Lab Result (when rcvd)
14	Grout (gray) at Toilet Base				PJ39403 -14A	Building B: Unisex Restroom – east side north end at toilet	
15	Sealant (white) on Sink				PJ39403 -15A	Building B: Women's Restroom – south side center	
16	Sealant (white) on Toilet				PJ39403 -16A	Building B: Women's Restroom – north side center	
17	Plaster (Smooth) on the Wall				PJ39403 -17A	Building B: Work Area – east side south end	
17	Plaster (Smooth) on the Ceiling				PJ39403 -17B	Building B: Nurse's Restroom – west side north end	
17	Plaster (Smooth) on the Wall				PJ39403 -17C	Building B: Nurse's Restroom – west side north end	
18	4" Vinyl Baseboard (Cream) and mastic				PJ39403 -18A	Building B: Nurse's Office – south side west end	
19	2" Ceramic Tile (Gray) and Grout				PJ39403 -19A	Building B: Nurse's Restroom – center of room	
20	6" Ceramic Tile (Beige) and Grout				PJ39403 -20A	Building B: Nurse's Restroom – east side south end	

DW = Drywall JC = Joint Compound WT = Wall Texture VFT = Vinyl Floor Tile VSF = Vinyl Sheet Flooring BB = Baseboard BBM = Baseboard Mastic CM = Carpet Mastic ACT = Acoustic Ceiling Tile ACS = Sprayed-on Acoustical Ceiling Material FP = Fireproofing PI = Pipe Insulation PFI = Pipe fitting insulation WP = Plaster CP = Ceiling Plaster ES = Exterior Stucco

Relinquished by: JSharp **Date & Time** 15:00 11/06/18	**Relinquished by:** **Date & Time:**	**Relinquished by:** **Date & Time:**
Received by: **Date & Time**	**Received by:** **Date & Time**	**Relinquished by:** **Date & Time:**

RECEIVED NOV 07 2018

FACS

SAMPLING DATA FORM & CHAIN OF CUSTODY

CLIENT: FR09 FACS Fresno **FRESNO UNIFIED SCHOOL DISTRICT**	**Sampled by: Jacob Sharp and Eric Farnsworth**	**Sample Date: 11-01-18-11-02-18**
Site/Bldg.: FRESNO UNIFIED SCHOOL DISTRICT Addams Elementary School 2117 W. McKinley Ave Fresno CA 93728	**Turnaround Time:** 48 hr **Analysis: PLM Standard**	
FACS Proj. No.: PJ39403	**Special Instructions** E-mail results to E-mail results to jvuglia@forensicanalytical.com and dpyle@forensicanalytical.com	

HA#	Homogeneous Material Description (incl. color, texture, phase of construction)	Quant. in SF (LF for small pipe only)	Friable/ Cat. I/ Cat. II	Condition (good, fair, poor)	Sample Number	Sample Location	Lab Result (when rcvd)
21	Sink Undercoating (black)				PJ39403 -21A	Building B: Hallway – south side east end	
22	Exterior Stucco				PJ39403 -22A	Building B: Exterior – south side west end at entry to office	
23	Window Putty				PJ39403 -23A	Building B: Exterior – north side east end near front entrance	
24	Carpet (Brown) and mastic				PJ39403 -24A	PCR 736: north side west end	
25	4" Vinyl Baseboard (Brown) and mastic				PJ39403 -25A	PCR 736: north side west end	
26	Tackboard and glue over drywall with tape and joint				PJ39403 -26A	PCR 736: north side west end	
26	Tackboard and glue over drywall without tape and joint				PJ39403 -26B	PCR 736: west side north end	
27	2' X 4' False Ceiling Panel (Fiberglass)				PJ39403 -27A	PCR 736: north side west end	
28	Carpet (Purple Multi) and mastic				PJ39403 -28A	PCR 940: north side west end	

DW = Drywall JC = Joint Compound WT = Wall Texture VFT = Vinyl Floor Tile VSF = Vinyl Sheet Flooring BB = Baseboard BBM = Baseboard Mastic CM = Carpet Mastic ACT = Acoustic Ceiling Tile ACS = Sprayed-on Acoustical Ceiling Material FP = Fireproofing PI = Pipe Insulation PFI = Pipe fitting insulation WP = Plaster CP = Ceiling Plaster ES = Exterior Stucco

Relinquished by: [signature] **Date & Time** 15:00 11/06/18	**Relinquished by:** **Date & Time:**	**Relinquished by:** **Date & Time:**
Received by: **Date & Time**	**Received by:** **Date & Time**	**Relinquished by:** **Date & Time:**

RECEIVED NOV 07 2018

FACS

SAMPLING DATA FORM & CHAIN OF CUSTODY

CLIENT: **FR09 FACS Fresno** **FRESNO UNIFIED SCHOOL DISTRICT**	**Sampled by: Jacob Sharp and Eric Farnsworth**	**Sample Date: 11-01-18-11-02-18**
Site/Bldg.: FRESNO UNIFIED SCHOOL DISTRICT Addams Elementary School 2117 W. McKinley Ave Fresno CA 93728	**Turnaround Time:** 48 hr **Analysis: PLM Standard**	
FACS Proj. No.: PJ39403	**Special Instructions** E-mail results to E-mail results to jvuglia@forensicanalytical.com and dpyle@forensicanalytical.com	

HA#	Homogeneous Material Description (incl. color, texture, phase of construction)	Quant. in SF (LF for small pipe only)	Friable/ Cat. I/ Cat. II	Condition (good, fair, poor)	Sample Number	Sample Location	Lab Result (when rcvd)
29	4" Vinyl Baseboard (Green) and mastic				PJ39403 -29A	PCR 940: north side west end	
30	Tackboard and glue over drywall with tape and joint				PJ39403 -30A	PCR 940: west side north end	
30	Tackboard and glue over drywall without tape and joint				PJ39403 -30B	PCR 940: west side north end	
31	2' X 4' False Ceiling Panel (Fiberglass)				PJ39403 -31A	PCR 940: west side center	
32	Sink Undercoating (black)				PJ39403 -32A	PCR 940: south side west end	
33	Carpet (Purple Multi) and mastic				PJ39403 -33A	PCR 560: north side west end	
34	4" Vinyl Baseboard (Green) and mastic				PJ39403 -34A	PCR 560: north side west end	
35	Tackboard and glue over drywall with tape and joint				PJ39403 -35A	PCR 560: north side west end	
35	Tackboard and glue over drywall without tape and joint				PJ39403 -35B	PCR 560: north side west end	

DW = Drywall JC = Joint Compound WT = Wall Texture VFT = Vinyl Floor Tile VSF = Vinyl Sheet Flooring BB = Baseboard BBM = Baseboard Mastic CM = Carpet Mastic ACT = Acoustic Ceiling Tile ACS = Sprayed-on Acoustical Ceiling Material FP = Fireproofing PI = Pipe Insulation PFI = Pipe fitting insulation WP = Plaster CP = Ceiling Plaster ES = Exterior Stucco

Relinquished by: JSlap **Date & Time** 1500 11/06/18	**Relinquished by:** **Date & Time:**	**Relinquished by:** **Date & Time:**
Received by: **Date & Time**	**Received by:** **Date & Time**	**Relinquished by:** **Date & Time:**

RECEIVED NOV 07 2018

FACS

SAMPLING DATA FORM & CHAIN OF CUSTODY

CLIENT: **FR09 FACS Fresno** **FRESNO UNIFIED SCHOOL DISTRICT**	**Sampled by: Jacob Sharp and Eric Farnsworth**	**Sample Date: 11-01-18-11-02-18**
Site/Bldg.: FRESNO UNIFIED SCHOOL DISTRICT Addams Elementary School 2117 W. McKinley Ave Fresno CA 93728	**Turnaround Time: 48 hr** **Analysis: PLM Standard**	
FACS Proj. No.: PJ39403	**Special Instructions** E-mail results to E-mail results to jvuglia@forensicanalytical.com and dpyle@forensicanalytical.com	

HA#	Homogeneous Material Description (incl. color, texture, phase of construction)	Quant. in SF (LF for small pipe only)	Friable/ Cat. I/ Cat. II	Condition (good, fair, poor)	Sample Number	Sample Location	Lab Result (when rcvd)
36	2' X 4' False Ceiling Panel (Fiberglass)				PJ39403 -36A	PCR 560: north side west end	
37	Sink Undercoating (black)				PJ39403 -37A	PCR 560: south side west end	
38	Carpet (Purple Multi) and mastic				PJ39403 -38A	Classroom 34 (DSA57883): west side north end	
39	4" Vinyl Baseboard (green) and mastic				PJ39403 -39A	Classroom 34 (DSA57883): north side center	
40	Tackboard and glue over drywall with tape and joint				PJ39403 -40A	Classroom 34 (DSA57883): north east corner	
40	Tackboard and glue over drywall without tape and joint				PJ39403 -40B	Classroom 34 (DSA57883): east side north end	
41	2' X 4' False Ceiling Panel (Fissure Pinhole)				PJ39403 -41A	Classroom 34 (DSA57883): north side west end above door	
42	Sink Undercoating (black)				PJ39403 -42A	Classroom 34 (DSA57883): south side west end	
43	Carpet (Purple Multi) and mastic				PJ39403 -43A	PCR 875: east side north end	

DW = Drywall JC = Joint Compound WT = Wall Texture VFT = Vinyl Floor Tile VSF = Vinyl Sheet Flooring BB = Baseboard BBM = Baseboard Mastic CM = Carpet Mastic ACT = Acoustic Ceiling Tile ACS = Sprayed-on Acoustical Ceiling Material FP = Fireproofing PI = Pipe Insulation PFI = Pipe fitting insulation WP = Plaster CP = Ceiling Plaster ES = Exterior Stucco

Relinquished by: **Date & Time** 15:00 11/06/18	**Relinquished by:** **Date & Time:**	**Relinquished by:** **Date & Time:**
Received by: **Date & Time**	**Received by:** **Date & Time**	**Relinquished by:** **Date & Time:**

RECEIVED NOV 07 2018

FACS

SAMPLING DATA FORM & CHAIN OF CUSTODY

CLIENT: **FR09 FACS Fresno** **FRESNO UNIFIED SCHOOL DISTRICT**	**Sampled by: Jacob Sharp and Eric Farnsworth**	**Sample Date: 11-01-18-11-02-18**
Site/Bldg.: FRESNO UNIFIED SCHOOL DISTRICT Addams Elementary School 2117 W. McKinley Ave Fresno CA 93728	**Turnaround Time: 48 hr** **Analysis: PLM Standard**	
FACS Proj. No.: PJ39403	**Special Instructions** E-mail results to E-mail results to jvuglia@forensicanalytical.com and dpyle@forensicanalytical.com	

HA#	Homogeneous Material Description (incl. color, texture, phase of construction)	Quant. in SF (LF for small pipe only)	Friable/ Cat. I/ Cat. II	Condition (good, fair, poor)	Sample Number	Sample Location	Lab Result (when rcvd)
44	4" Vinyl Baseboard (green) and mastic				PJ39403 -44A	PCR 875: west side south end	
45	Tackboard and glue over drywall with tape and joint				PJ39403 -45A	PCR 875: north side west end	
45	Tackboard and glue over drywall without tape and joint				PJ39403 -45B	PCR 875: west side north end	
46	2' X 4' False Ceiling Panel (Fiberglass)				PJ39403 -46A	PCR 875: north side west end	
47	Sink Undercoating (black)				PJ39403 -47A	PCR 875: South side west end	
48	Linoleum (blue pebble) and mastic				PJ39403 -48A	Portable restroom: Men's Restroom – east side south end	
49	6" Vinyl Baseboard (black) and mastic				PJ39403 -49A	Portable restroom: Men's Restroom – east side south end	
50	Fiber Reinforced Panel and Glue over Drywall with tape and joint				PJ39403 -50A	Portable restroom: Men's Restroom – east side north end	
50	Fiber Reinforced Panel and Glue over Drywall without tape and joint				PJ39403 -50B	Portable restroom: Men's Restroom – east side north end	

DW = Drywall JC = Joint Compound WT = Wall Texture VFT = Vinyl Floor Tile VSF = Vinyl Sheet Flooring BB = Baseboard BBM = Baseboard Mastic CM = Carpet Mastic ACT = Acoustic Ceiling Tile ACS = Sprayed-on Acoustical Ceiling Material FP = Fireproofing PI = Pipe Insulation PFI = Pipe fitting insulation WP = Plaster CP = Ceiling Plaster ES = Exterior Stucco

Relinquished by: [signature] **Date & Time** 15:00 11/06/18	**Relinquished by:** **Date & Time:**	**Relinquished by:** **Date & Time:**
Received by: **Date & Time**	**Received by:** **Date & Time**	**Relinquished by:** **Date & Time:**

RECEIVED NOV 07 2018

FACS

SAMPLING DATA FORM & CHAIN OF CUSTODY

CLIENT: **FR09 FACS Fresno** **FRESNO UNIFIED SCHOOL DISTRICT**	**Sampled by: Jacob Sharp and Eric Farnsworth**	**Sample Date: 11-01-18-11-02-18**
Site/Bldg.: FRESNO UNIFIED SCHOOL DISTRICT Addams Elementary School 2117 W. McKinley Ave Fresno CA 93728	**Turnaround Time: 48 hr** **Analysis: PLM Standard**	
FACS Proj. No.: PJ39403	**Special Instructions** E-mail results to E-mail results to jvuglia@forensicanalytical.com and dpyle@forensicanalytical.com	

HA#	Homogeneous Material Description (incl. color, texture, phase of construction)	Quant. in SF (LF for small pipe only)	Friable/ Cat. I/ Cat. II	Condition (good, fair, poor)	Sample Number	Sample Location	Lab Result (when rcvd)
51	2' X 4" False Ceiling Panel (micro dot)				PJ39403 -51A	Portable restroom: Men's Restroom – east side north end	
52	Sealant (white) on sink				PJ39403 -52A	Portable restroom: Women's Restroom – west side south end	
53	Carpet (Gray) and mastic				PJ39403 -53A	Portable 1178: north side west end	
54	4" Vinyl Baseboard (gray) and mastic				PJ39403 -54A	Portable 1178: north side west end	
55	Tackboard and glue over drywall with tape and joint				PJ39403 -55A	Portable 1178: north side west end	
55	Tackboard and glue over drywall without tape and joint				PJ39403 -55B	Portable 1178: west side north end	
56	2' X 4' False Ceiling Panel (Fiberglass)				PJ39403 -56A	Portable 1178: north side west end	
57	Sink Undercoating (black)				PJ39403 -57A	Portable 1178: south side west end	
58	Carpet (brown) and mastic				PJ39403 -58A	PCR 716: south side east end	

DW = Drywall JC = Joint Compound WT = Wall Texture VFT = Vinyl Floor Tile VSF = Vinyl Sheet Flooring BB = Baseboard BBM = Baseboard Mastic CM = Carpet Mastic ACT = Acoustic Ceiling Tile ACS = Sprayed-on Acoustical Ceiling Material FP = Fireproofing PI = Pipe Insulation PFI = Pipe fitting insulation WP = Plaster CP = Ceiling Plaster ES = Exterior Stucco

Relinquished by: [signature] **Date & Time** 15:00 11/06/18	**Relinquished by:** **Date & Time:**	**Relinquished by:** **Date & Time:**
Received by: **Date & Time**	**Received by:** **Date & Time**	**Relinquished by:** **Date & Time:**

RECEIVED NOV 07 2018 [signature]

FACS

SAMPLING DATA FORM & CHAIN OF CUSTODY

CLIENT: **FR09 FACS Fresno** **FRESNO UNIFIED SCHOOL DISTRICT**	**Sampled by: Jacob Sharp and Eric Farnsworth**	**Sample Date: 11-01-18-11-02-18**
Site/Bldg.: FRESNO UNIFIED SCHOOL DISTRICT Addams Elementary School 2117 W. McKinley Ave Fresno CA 93728	**Turnaround Time: 48 hr** **Analysis: PLM Standard**	
FACS Proj. No.: PJ39403	**Special Instructions** E-mail results to E-mail results to jvuglia@forensicanalytical.com and dpyle@forensicanalytical.com	

HA#	Homogeneous Material Description (incl. color, texture, phase of construction)	Quant. in SF (LF for small pipe only)	Friable/ Cat. I/ Cat. II	Condition (good, fair, poor)	Sample Number	Sample Location	Lab Result (when rcvd)
59	4" Vinyl Baseboard (brown) and mastic				PJ39403 -59A	PCR 716: south side east end	
60	Tackboard and glue over drywall with tape and joint				PJ39403 -60A	PCR 716: south side east end	
60	Tackboard and glue over drywall without tape and joint				PJ39403 -60B	PCR 716: east side south end	
61	2' X 4' False Ceiling Panel (Fiberglass)				PJ39403 -61A	PCR 716: south side east end	
62	Sink Undercoating (black)				PJ39403 -62A	PCR 716: north side east end	
63	Carpet (brown) and mastic				PJ39403 -63A	PCR 650: south side east end	
64	4" Vinyl Baseboard (brown) and mastic				PJ39403 -64A	PCR 650: south side east end	
65	Tackboard and glue over drywall without tape and joint				PJ39403 -65A	PCR 650: south side east end	
66	2' X 4' False Ceiling Panel (Fiberglass)				PJ39403 -66A	PCR 650: south side east end	

DW = Drywall JC = Joint Compound WT = Wall Texture VFT = Vinyl Floor Tile VSF = Vinyl Sheet Flooring BB = Baseboard BBM = Baseboard Mastic CM = Carpet Mastic ACT = Acoustic Ceiling Tile ACS = Sprayed-on Acoustical Ceiling Material FP = Fireproofing PI = Pipe Insulation PFI = Pipe fitting insulation WP = Plaster CP = Ceiling Plaster ES = Exterior Stucco

Relinquished by: **Date & Time** 1500 11/06/18	**Relinquished by:** **Date & Time:**	**Relinquished by:** **Date & Time:**
Received by: **Date & Time**	**Received by:** **Date & Time**	**Relinquished by:** **Date & Time:**

RECEIVED NOV 07 2018

FACS

SAMPLING DATA FORM & CHAIN OF CUSTODY

CLIENT: **FR09 FACS Fresno** **FRESNO UNIFIED SCHOOL DISTRICT**	**Sampled by: Jacob Sharp and Eric Farnsworth**	**Sample Date: 11-01-18-11-02-18**
Site/Bldg.: FRESNO UNIFIED SCHOOL DISTRICT Addams Elementary School 2117 W. McKinley Ave Fresno CA 93728	**Turnaround Time: 48 hr** **Analysis: PLM Standard**	
FACS Proj. No.: PJ39403	**Special Instructions** E-mail results to E-mail results to jvuglia@forensicanalytical.com and dpyle@forensicanalytical.com	

HA#	Homogeneous Material Description (incl. color, texture, phase of construction)	Quant. in SF (LF for small pipe only)	Friable/ Cat. I/ Cat. II	Condition (good, fair, poor)	Sample Number	Sample Location	Lab Result (when rcvd)
67	Sink undercoating (black)				PJ39403 -67A	PCR 650: north side east end	
68	Carpet (green) and mastic				PJ39403 -68A	PCR 316: north side east end	
69	4" Vinyl Baseboard (green) and mastic				PJ39403 -69A	PCR 316: north side east end	
70	Tackboard and glue over drywall without tape and joint				PJ39403 -70A	PCR 316: north side east end	
71	2' X 4' False Ceiling Panel (Heavy Texture)				PJ39403 -71A	PCR 316: north side east end	
72	Sink Undercoating				PJ39403 -72A	PCR 316: south side east end	
73	Carpet (green) and mastic				PJ39403 -73A	PCR 378: north side east end	
74	4" Vinyl Baseboard (green) and mastic				PJ39403 -74A	PCR 378: north side east end	
75	Tackboard and glue over drywall with tape and joint				PJ39403 -75A	PCR 378: north side west end	

DW = Drywall JC = Joint Compound WT = Wall Texture VFT = Vinyl Floor Tile VSF = Vinyl Sheet Flooring BB = Baseboard BBM = Baseboard Mastic CM = Carpet Mastic ACT = Acoustic Ceiling Tile ACS = Sprayed-on Acoustical Ceiling Material FP = Fireproofing PI = Pipe Insulation PFI = Pipe fitting insulation WP = Plaster CP = Ceiling Plaster ES = Exterior Stucco

Relinquished by: [signature] **Date & Time** 15:00 11/06/18	**Relinquished by:** **Date & Time:**	**Relinquished by:** **Date & Time:**
Received by: **Date & Time**	**Received by:** **Date & Time**	**Relinquished by:** **Date & Time:**

RECEIVED NOV 07 2018

FACS

SAMPLING DATA FORM & CHAIN OF CUSTODY

CLIENT: **FR09 FACS Fresno** **FRESNO UNIFIED SCHOOL DISTRICT**	**Sampled by: Jacob Sharp and Eric Farnsworth**	**Sample Date: 11-01-18-11-02-18**
Site/Bldg.: FRESNO UNIFIED SCHOOL DISTRICT Addams Elementary School 2117 W. McKinley Ave Fresno CA 93728	**Turnaround Time: 48 hr** **Analysis: PLM Standard**	
FACS Proj. No.: PJ39403	**Special Instructions** E-mail results to E-mail results to jvuglia@forensicanalytical.com and dpyle@forensicanalytical.com	

HA#	Homogeneous Material Description (incl. color, texture, phase of construction)	Quant. in SF (LF for small pipe only)	Friable/ Cat. I/ Cat. II	Condition (good, fair, poor)	Sample Number	Sample Location	Lab Result (when rcvd)
75	Tackboard and glue over drywall without tape and joint				PJ39403 -75B	PCR 378: north side west end	
76	2' X 4' False Ceiling Panel (Heavy Texture)				PJ39403 -76A	PCR 378: north side west end	
77	Sink Undercoating				PJ39403 -77A	PCR 378: south side west end	
78	Carpet (brown) and mastic				PJ39403 -78A	PCR 423: north side west end	
79	4" Vinyl Baseboard (brown) and mastic				PJ39403 -79A	PCR 423: north side west end	
80	Sink undercoating (black)				PJ39403 -80A	PCR 736: south side west end	
81	2' X 4' False Ceiling Panel (medium fissure pinhole)				PJ39403 -81A	PCR 875: north side west end	
82	Sealant (white) on Sink				PJ39403 -82A	TK1 (PCR 542): Restroom – west side north end	
83	Carpet (gray multi) and mastic				PJ39403 -83A	TK1 (PCR 542): Classroom – west side north end	

DW = Drywall JC = Joint Compound WT = Wall Texture VFT = Vinyl Floor Tile VSF = Vinyl Sheet Flooring BB = Baseboard BBM = Baseboard Mastic CM = Carpet Mastic ACT = Acoustic Ceiling Tile ACS = Sprayed-on Acoustical Ceiling Material FP = Fireproofing PI = Pipe Insulation PFI = Pipe fitting insulation WP = Plaster CP = Ceiling Plaster ES = Exterior Stucco

Relinquished by: **Date & Time** 15:00 11/06/18	**Relinquished by:** **Date & Time:**	**Relinquished by:** **Date & Time:**
Received by: **Date & Time**	**Received by:** **Date & Time**	**Relinquished by:** **Date & Time:**

RECEIVED NOV 07 2018

FACS

SAMPLING DATA FORM & CHAIN OF CUSTODY

CLIENT: **FR09 FACS Fresno** **FRESNO UNIFIED SCHOOL DISTRICT**	**Sampled by: Jacob Sharp and Eric Farnsworth**	**Sample Date: 11-01-18-11-02-18**
Site/Bldg.: FRESNO UNIFIED SCHOOL DISTRICT Addams Elementary School 2117 W. McKinley Ave Fresno CA 93728	**Turnaround Time: 48 hr** **Analysis: PLM Standard**	
FACS Proj. No.: PJ39403	**Special Instructions** E-mail results to E-mail results to jvuglia@forensicanalytical.com and dpyle@forensicanalytical.com	

HA#	Homogeneous Material Description (incl. color, texture, phase of construction)	Quant. in SF (LF for small pipe only)	Friable/ Cat. I/ Cat. II	Condition (good, fair, poor)	Sample Number	Sample Location	Lab Result (when rcvd)
84	4" Vinyl Baseboard (gray) and mastic				PJ39403 -84A	TK1 (PCR 542): Classroom –west side north end	
85	Tackboard and glue over drywall with tape and joint				PJ39403 -85A	TK1 (PCR 542): Classroom – west side north end	
85	Tackboard and glue over drywall without tape and joint				PJ39403 -85B	TK1 (PCR 542): Classroom –north side west end	
86	2' X 4' False Ceiling Panel (fiberglass)				PJ39403 -86A	TK1 (PCR 542): Classroom – west side north end	
87	Linoleum (blue/pebble) and mastic				PJ39403 -84A	TK1 (PCR 542): Classroom – south side east end under sink	
88	6" Vinyl Baseboard (gray) and mastic				PJ39403 -88A	TK1 (PCR 542): Classroom – south side east end	
89	Fiber Reinforced Panel and Glue over drywall with tape and joint				PJ39403 -89A	TK1 (PCR 542): Restroom – north side west end	
89	Fiber Reinforced Panel and Glue over drywall without tape and joint				PJ39403 -89B	TK1 (PCR 542): Restroom –north side west end	
90	Linoleum (cream pebble) and mastic				PJ39403 -90A	TK1 (PCR 542): Closet – east end center	

DW = Drywall JC = Joint Compound WT = Wall Texture VFT = Vinyl Floor Tile VSF = Vinyl Sheet Flooring BB = Baseboard BBM = Baseboard Mastic CM = Carpet Mastic ACT = Acoustic Ceiling Tile ACS = Sprayed-on Acoustical Ceiling Material FP = Fireproofing PI = Pipe Insulation PFI = Pipe fitting insulation WP = Plaster CP = Ceiling Plaster ES = Exterior Stucco

Relinquished by: [signature] **Date & Time** 1500 11/06/18	**Relinquished by:** **Date & Time:**	**Relinquished by:** **Date & Time:**
Received by: **Date & Time**	**Received by:** **Date & Time**	**Relinquished by:** **Date & Time:**

RECEIVED NOV 07 2018

FACS

SAMPLING DATA FORM & CHAIN OF CUSTODY

CLIENT: **FR09 FACS Fresno** **FRESNO UNIFIED SCHOOL DISTRICT**	**Sampled by: Jacob Sharp and Eric Farnsworth**	**Sample Date: 11-01-18-11-02-18**
Site/Bldg.: FRESNO UNIFIED SCHOOL DISTRICT Addams Elementary School 2117 W. McKinley Ave Fresno CA 93728	**Turnaround Time: 48 hr** **Analysis: PLM Standard**	
FACS Proj. No.: PJ39403	**Special Instructions** E-mail results to E-mail results to jvuglia@forensicanalytical.com and dpyle@forensicanalytical.com	

HA#	Homogeneous Material Description (incl. color, texture, phase of construction)	Quant. in SF (LF for small pipe only)	Friable/ Cat. I/ Cat. II	Condition (good, fair, poor)	Sample Number	Sample Location	Lab Result (when rcvd)
91	Carpet (gray multi) and mastic				PJ39403 -91A	TK2 (DSA27146): Classroom – north side east end	
92	4" Vinyl Baseboard (blue) and glue				PJ39403 -92A	TK2 (DSA27146): Classroom – north side center	
93	Tackboard and glue over drywall with tape and joint				PJ39403 -93A	TK2 (DSA27146): Classroom -northwest corner	
93	Tackboard and glue over drywall without tape and joint				PJ39403 -93B	TK2 (DSA27146): Classroom – north side west end	
94	2' X 4' False Ceiling Panel (fiberglass)				PJ39403 -94A	TK2 (DSA27146): Classroom – north side east end	
95	Sink Undercoating (black)				PJ39403 -95A	TK2 (DSA27146): Classroom – north side center	
96	Linoleum (cream) and mastic				PJ39403 -96A	TK2 (DSA27146): Restroom – north side east end near entry	
97	6" Vinyl Baseboard (blue) and mastic				PJ39403 -97A	TK2 (DSA27146): Restroom – north side east end at entry	
98	Fiber Reinforced Panel and Glue over drywall with tape and joint				PJ39403 -98A	TK2 (DSA27146): Restroom – northeast corner	

DW = Drywall JC = Joint Compound WT = Wall Texture VFT = Vinyl Floor Tile VSF = Vinyl Sheet Flooring BB = Baseboard BBM = Baseboard Mastic CM = Carpet Mastic ACT = Acoustic Ceiling Tile ACS = Sprayed-on Acoustical Ceiling Material FP = Fireproofing PI = Pipe Insulation PFI = Pipe fitting insulation WP = Plaster CP = Ceiling Plaster ES = Exterior Stucco

Relinquished by: [signature] **Date & Time** 15:00 11/06/18	**Relinquished by:** **Date & Time:**	**Relinquished by:** **Date & Time:**
Received by: **Date & Time**	**Received by:** **Date & Time**	**Relinquished by:** **Date & Time:**

RECEIVED NOV 07 2018

FACS

SAMPLING DATA FORM & CHAIN OF CUSTODY

CLIENT: **FR09 FACS Fresno** **FRESNO UNIFIED SCHOOL DISTRICT**	**Sampled by: Jacob Sharp and Eric Farnsworth**	**Sample Date: 11-01-18-11-02-18**
Site/Bldg.: FRESNO UNIFIED SCHOOL DISTRICT Addams Elementary School 2117 W. McKinley Ave Fresno CA 93728	**Turnaround Time: 48 hr** **Analysis: PLM Standard**	
FACS Proj. No.: PJ39403	**Special Instructions** E-mail results to E-mail results to jvuglia@forensicanalytical.com and dpyle@forensicanalytical.com	

HA#	Homogeneous Material Description (incl. color, texture, phase of construction)	Quant. in SF (LF for small pipe only)	Friable/ Cat. I/ Cat. II	Condition (good, fair, poor)	Sample Number	Sample Location	Lab Result (when rcvd)
98	Fiber Reinforced Panel and Glue over drywall with tape and joint				PJ39403 -98B	TK2 (DSA27146): Restroom – north side east end	
99	2' X 4' False Ceiling Panel				PJ39403 -99A	TK2 (DSA27146): Restroom – center of room at damage	
100	Sealant (white) on toilet				PJ39403 -100A	TK2 (DSA27146): Restroom – west side south end at corner	
101	Bottom sealant				PJ39403 -101A	PCR 316: Exterior – north side center	
102	Building Frame Sealant				PJ39403 -102A	PCR 316: Exterior – north side center	
103	Bottom sealant				PJ39403 -103A	PCR 650: Exterior – south side center	
104	Building Frame Sealant				PJ39403 -104A	PCR 650: Exterior – south side center	
105	Bottom sealant				PJ39403 -105A	PCR 716: Exterior – south side center	
106	Building Frame Sealant				PJ39403 -106A	PCR 716: Exterior – south side center	

DW = Drywall JC = Joint Compound WT = Wall Texture VFT = Vinyl Floor Tile VSF = Vinyl Sheet Flooring BB = Baseboard BBM = Baseboard Mastic CM = Carpet Mastic ACT = Acoustic Ceiling Tile ACS = Sprayed-on Acoustical Ceiling Material FP = Fireproofing PI = Pipe Insulation PFI = Pipe fitting insulation WP = Plaster CP = Ceiling Plaster ES = Exterior Stucco

Relinquished by: [signature] **Date & Time** 15:00 11/06/18	**Relinquished by:** **Date & Time:**	**Relinquished by:** **Date & Time:**
Received by: **Date & Time**	**Received by:** **Date & Time**	**Relinquished by:** **Date & Time:**

RECEIVED NOV 07 2018

FACS

SAMPLING DATA FORM & CHAIN OF CUSTODY

CLIENT: **FR09 FACS Fresno** **FRESNO UNIFIED SCHOOL DISTRICT**	**Sampled by: Jacob Sharp and Eric Farnsworth**	**Sample Date: 11-01-18-11-02-18**
Site/Bldg.: FRESNO UNIFIED SCHOOL DISTRICT Addams Elementary School 2117 W. McKinley Ave Fresno CA 93728	**Turnaround Time: 48 hr** **Analysis: PLM Standard**	
FACS Proj. No.: PJ39403	**Special Instructions** E-mail results to E-mail results to jvuglia@forensicanalytical.com and dpyle@forensicanalytical.com	

HA#	Homogeneous Material Description (incl. color, texture, phase of construction)	Quant. in SF (LF for small pipe only)	Friable/ Cat. I/ Cat. II	Condition (good, fair, poor)	Sample Number	Sample Location	Lab Result (when rcvd)
107	Bottom sealant				PJ39403 -107A	PCR 1178: Exterior – west side center	
108	Bottom sealant on concrete				PJ39403 -108A	PCR 1178: Exterior – west side center	
109	Sealant behind door trim				PJ39403 -109A	Portable Restroom – Exterior – south side west end	
110	Bottom sealant				PJ39403 -110A	PCR 875: Exterior – north side center	
111	Building Frame sealant				PJ39403 -111A	PCR 875: Exterior – north side center	
112	Bottom sealant				PJ39403 -112A	PCR 739: Exterior – east side north end	
113	Building Frame sealant				PJ39403 -113A	PCR 739: Exterior – north side center	
114	Bottom sealant				PJ39403 -114A	PCR 560: Exterior – south side east end	
115	Building Frame sealant				PJ39403 -115A	PCR 560: Exterior – north side center	

DW = Drywall JC = Joint Compound WT = Wall Texture VFT = Vinyl Floor Tile VSF = Vinyl Sheet Flooring BB = Baseboard BBM = Baseboard Mastic CM = Carpet Mastic ACT = Acoustic Ceiling Tile ACS = Sprayed-on Acoustical Ceiling Material FP = Fireproofing PI = Pipe Insulation PFI = Pipe fitting insulation WP = Plaster CP = Ceiling Plaster ES = Exterior Stucco

Relinquished by: JSharp **Date & Time** 15:00 11/06/18	**Relinquished by:** **Date & Time:**	**Relinquished by:** **Date & Time:**
Received by: **Date & Time**	**Received by:** **Date & Time**	**Relinquished by:** **Date & Time:**

RECEIVED NOV 07 2018

FACS

SAMPLING DATA FORM & CHAIN OF CUSTODY

CLIENT: **FR09 FACS Fresno** **FRESNO UNIFIED SCHOOL DISTRICT**	**Sampled by: Jacob Sharp and Eric Farnsworth**	**Sample Date: 11-01-18-11-02-18**
Site/Bldg.: FRESNO UNIFIED SCHOOL DISTRICT Addams Elementary School 2117 W. McKinley Ave Fresno CA 93728	**Turnaround Time: 48 hr** **Analysis: PLM Standard**	
FACS Proj. No.: PJ39403	**Special Instructions** E-mail results to E-mail results to jvuglia@forensicanalytical.com and dpyle@forensicanalytical.com	

HA#	Homogeneous Material Description (incl. color, texture, phase of construction)	Quant. in SF (LF for small pipe only)	Friable/ Cat. I/ Cat. II	Condition (good, fair, poor)	Sample Number	Sample Location	Lab Result (when rcvd)
116	Bottom sealant				PJ39403 -116A	PCR 940: Exterior – east side north end	
117	Building Frame sealant				PJ39403 -117A	PCR 940: Exterior – north side center	
118	Bottom sealant				PJ39403 -118A	Classroom 34 (DSA57883): Exterior – north side center	
119	Building Frame sealant				PJ39403 -119A	Classroom 34 (DSA57883): Exterior – north side center	
120	Bottom sealant				PJ39403 -120A	PCR 423: Exterior – north side center	
121	Building Frame sealant				PJ39403 -121A	PCR 423: Exterior – north side center	
122	Bottom sealant				PJ39403 -122A	TK1 (PCR 542): Exterior – south side center	
123	Building Frame sealant				PJ39403 -123A	TK1 (PCR 542): Exterior – west side south end	
123	Building Frame sealant				PJ39403 -123B	TK1 (PCR 542): Exterior – west side north end	

DW = Drywall JC = Joint Compound WT = Wall Texture VFT = Vinyl Floor Tile VSF = Vinyl Sheet Flooring BB = Baseboard BBM = Baseboard Mastic CM = Carpet Mastic ACT = Acoustic Ceiling Tile ACS = Sprayed-on Acoustical Ceiling Material FP = Fireproofing PI = Pipe Insulation PFI = Pipe fitting insulation WP = Plaster CP = Ceiling Plaster ES = Exterior Stucco

Relinquished by: [signature] **Date & Time** 1500 11/06/18	**Relinquished by:** **Date & Time:**	**Relinquished by:** **Date & Time:**
Received by: **Date & Time**	**Received by:** **Date & Time**	**Relinquished by:** **Date & Time:**

RECEIVED NOV 07 2018

FACS

SAMPLING DATA FORM & CHAIN OF CUSTODY

CLIENT: **FR09 FACS Fresno** **FRESNO UNIFIED SCHOOL DISTRICT**	**Sampled by: Jacob Sharp and Eric Farnsworth**	**Sample Date: 11-01-18-11-02-18**
Site/Bldg.: FRESNO UNIFIED SCHOOL DISTRICT Addams Elementary School 2117 W. McKinley Ave Fresno CA 93728	**Turnaround Time: 48 hr** **Analysis: PLM Standard**	
FACS Proj. No.: PJ39403	**Special Instructions** E-mail results to E-mail results to jvuglia@forensicanalytical.com and dpyle@forensicanalytical.com	

HA#	Homogeneous Material Description (incl. color, texture, phase of construction)	Quant. in SF (LF for small pipe only)	Friable/ Cat. I/ Cat. II	Condition (good, fair, poor)	Sample Number	Sample Location	Lab Result (when rcvd)
124	Paint Texture				PJ39403 -124A	TK2 (DSA27146): Exterior – north side center	
125	Bottom sealant				PJ39403 -125A	TK2 (DSA27146): Exterior – south side center	
126	Side Building Frame sealant				PJ39403 -126A	TK2 (DSA27146): Exterior – west side north end	
127	Building Frame sealant				PJ39403 -127A	TK2 (DSA27146): Exterior – north side center	
128	Window sealant				PJ39403 -128A	TK2 (DSA27146): Exterior – north side west end	
129	Fibrous Material on Wall				PJ39403 -129A	TK2 (DSA27146): Exterior – south side center	
130	Edge Mastic				PJ39403 -130A	PCR 316: Exterior – north side west end	
131	Repair Cloth Fibrous Material				PJ39403 -131A	PCR 316: Exterior – east side south end	
132	Edge Mastic				PJ39403 -132A	PCR 650: Exterior – south side east end	

DW = Drywall JC = Joint Compound WT = Wall Texture VFT = Vinyl Floor Tile VSF = Vinyl Sheet Flooring BB = Baseboard BBM = Baseboard Mastic CM = Carpet Mastic ACT = Acoustic Ceiling Tile ACS = Sprayed-on Acoustical Ceiling Material FP = Fireproofing PI = Pipe Insulation PFI = Pipe fitting insulation WP = Plaster CP = Ceiling Plaster ES = Exterior Stucco

Relinquished by: J Sloan **Date & Time** 1500 11/06/18	**Relinquished by:** **Date & Time:**	**Relinquished by:** **Date & Time:**
Received by: **Date & Time**	**Received by:** **Date & Time**	**Relinquished by:** **Date & Time:**

RECEIVED NOV 07 2018

FACS

SAMPLING DATA FORM & CHAIN OF CUSTODY

CLIENT: **FR09 FACS Fresno** **FRESNO UNIFIED SCHOOL DISTRICT**	**Sampled by: Jacob Sharp and Eric Farnsworth**	**Sample Date: 11-01-18-11-02-18**
Site/Bldg.: FRESNO UNIFIED SCHOOL DISTRICT Addams Elementary School 2117 W. McKinley Ave Fresno CA 93728	**Turnaround Time: 48 hr** **Analysis: PLM Standard**	
FACS Proj. No.: PJ39403	**Special Instructions** E-mail results to E-mail results to jvuglia@forensicanalytical.com and dpyle@forensicanalytical.com	

HA#	Homogeneous Material Description (incl. color, texture, phase of construction)	Quant. in SF (LF for small pipe only)	Friable/ Cat. I/ Cat. II	Condition (good, fair, poor)	Sample Number	Sample Location	Lab Result (when rcvd)
133	Edge Mastic				PJ39403 -133A	PCR 716: Exterior – north side east end	
134	Edge Mastic				PJ39403 -134A	PCR 1178: Exterior – north side east end	
135	Edge Mastic				PJ39403 -135A	Portable restrooms: Exterior –west side center	
136	Edge Mastic				PJ39403 -136A	PCR 875: Exterior – south side center	
137	Edge Mastic				PJ39403 -137A	PCR 737: Exterior – south side east end	
138	Edge Mastic				PJ39403 -138A	PCR 650: Exterior – north side west end	
139	Edge Mastic				PJ39403 -139A	PCR 940: Exterior – north side east end	
140	Edge Mastic				PJ39403 -140A	Classroom 34 (DSA57883): Exterior – south side east end	
141	Bolt Mastic				PJ39403 -141A	Classroom 34 (DSA57883): Exterior – south side center	

DW = Drywall JC = Joint Compound WT = Wall Texture VFT = Vinyl Floor Tile VSF = Vinyl Sheet Flooring BB = Baseboard BBM = Baseboard Mastic CM = Carpet Mastic ACT = Acoustic Ceiling Tile ACS = Sprayed-on Acoustical Ceiling Material FP = Fireproofing PI = Pipe Insulation PFI = Pipe fitting insulation WP = Plaster CP = Ceiling Plaster ES = Exterior Stucco

Relinquished by: **Date & Time** 15:00 11/06/18	**Relinquished by:** **Date & Time:**	**Relinquished by:** **Date & Time:**
Received by: **Date & Time**	**Received by:** **Date & Time**	**Relinquished by:** **Date & Time:**

RECEIVED NOV 07 2018

FACS

SAMPLING DATA FORM & CHAIN OF CUSTODY

CLIENT: FR09 FACS Fresno **FRESNO UNIFIED SCHOOL DISTRICT**	**Sampled by: Jacob Sharp and Eric Farnsworth**	**Sample Date: 11-01-18-11-02-18**
Site/Bldg.: FRESNO UNIFIED SCHOOL DISTRICT Addams Elementary School 2117 W. McKinley Ave Fresno CA 93728	**Turnaround Time: 48 hr** **Analysis: PLM Standard**	
FACS Proj. No.: PJ39403	**Special Instructions** E-mail results to E-mail results to jvuglia@forensicanalytical.com and dpyle@forensicanalytical.com	

HA#	Homogeneous Material Description (incl. color, texture, phase of construction)	Quant. in SF (LF for small pipe only)	Friable/ Cat. I/ Cat. II	Condition (good, fair, poor)	Sample Number	Sample Location	Lab Result (when rcvd)
142	Edge Mastic				PJ39403 -142A	PCR 423: Exterior – south side east end	
143	Edge Mastic				PJ39403 -143A	TK1 (PCR 542): Exterior – west side south end	
144	Edge Mastic				PJ39403 -144A	TK2 (DSA27146): Exterior – north side south end	

DW = Drywall JC = Joint Compound WT = Wall Texture VFT = Vinyl Floor Tile VSF = Vinyl Sheet Flooring BB = Baseboard BBM = Baseboard Mastic CM = Carpet Mastic ACT = Acoustic Ceiling Tile ACS = Sprayed-on Acoustical Ceiling Material FP = Fireproofing PI = Pipe Insulation PFI = Pipe fitting insulation WP = Plaster CP = Ceiling Plaster ES = Exterior Stucco

Relinquished by: **Date & Time** 15:00 11/06/18	**Relinquished by:** **Date & Time:**	**Relinquished by:** **Date & Time:**
Received by: **Date & Time**	**Received by:** **Date & Time**	**Relinquished by:** **Date & Time:**

RECEIVED NOV 07 2018

Forensic Analytical LABORATORIES

Final Report

Bulk Asbestos Analysis

(EPA Method 40CFR, Part 763, Appendix E to Subpart E and EPA 600/R-93-116, Visual Area Estimation)

FACS - Fresno
Joseph Vuglia
21228 Cabot Blvd.

Hayward, CA 94545

Client ID: FR09
Report Number: B268328
Date Received: 11/07/18
Date Analyzed: 11/08/18
Date Printed: 11/09/18
First Reported: 11/09/18

Job ID/Site: PJ39403; FRESNO UNIFIED SCHOOL DISTRICT Addams Elementary School
2117 W. McKinley Ave Fresno CA 93728
Date(s) Collected:

FALI Job ID: FR09
Total Samples Submitted: 165
Total Samples Analyzed: 165

Sample ID	Lab Number	Asbestos Type	Percent in Layer	Asbestos Type	Percent in Layer	Asbestos Type	Percent in Layer
PJ39403-01A	12094207						
Layer: White Tile			**ND**				
Layer: Yellow Mastic			**ND**				
Total Composite Values of Fibrous Components:		**Asbestos (ND)**					
Cellulose (Trace)							
PJ39403-02A	12094208						
Layer: White Baseboard			**ND**				
Layer: White Mastic			**ND**				
Total Composite Values of Fibrous Components:		**Asbestos (ND)**					
PJ39403-03A	12094209						
Layer: Tan Fibrous Material			**ND**				
Layer: White Semi-Fibrous Material			**ND**				
Total Composite Values of Fibrous Components:		**Asbestos (ND)**					
Cellulose (95 %) Synthetic (3 %)							
PJ39403-04A	12094210						
Layer: Beige Fibrous Material			**ND**				
Layer: Paint			**ND**				
Total Composite Values of Fibrous Components:		**Asbestos (ND)**					
Cellulose (75 %) Fibrous Glass (5 %)							
PJ39403-05A	12094211						
Layer: Grey Carpet			**ND**				
Layer: Yellow Mastic			**ND**				
Total Composite Values of Fibrous Components:		**Asbestos (ND)**					
Cellulose (Trace) Synthetic (85 %)							
PJ39403-05B	12094212						
Layer: Grey Carpet			**ND**				
Layer: Yellow Mastic			**ND**				
Layer: Grey Cementitious Material			**ND**				
Total Composite Values of Fibrous Components:		**Asbestos (ND)**					
Cellulose (Trace) Synthetic (65 %)							

3777 Depot Road, Suite 409, Hayward, CA 94545 / Telephone: (510) 887-8828 (800) 827-FASI / Fax: (510) 887-4218

Report Number: B268328
Client Name: FACS - Fresno **Date Printed:** 11/09/18

Sample ID	Lab Number	Asbestos Type	Percent in Layer	Asbestos Type	Percent in Layer	Asbestos Type	Percent in Layer
PJ39403-06A	12094213						
Layer: Grey Carpet			**ND**				
Total Composite Values of Fibrous Components:		**Asbestos (ND)**					
PJ39403-07A	12094214						
Layer: Grey Carpet			**ND**				
Layer: White Mastic			**ND**				
Layer: Paint			**ND**				
Total Composite Values of Fibrous Components:		**Asbestos (ND)**					
Cellulose (Trace) Synthetic (85 %)							
PJ39403-08A	12094215						
Layer: White Drywall			**ND**				
Layer: White Joint Compound			**ND**				
Layer: White Tape			**ND**				
Layer: White Joint Compound			**ND**				
Layer: Paint			**ND**				
Total Composite Values of Fibrous Components:		**Asbestos (ND)**					
Cellulose (20 %) Fibrous Glass (10 %)							
PJ39403-08B	12094216						
Layer: White Drywall			**ND**				
Layer: White Joint Compound			**ND**				
Layer: Paint			**ND**				
Total Composite Values of Fibrous Components:		**Asbestos (ND)**					
Cellulose (20 %) Fibrous Glass (10 %)							
PJ39403-09A	12094217						
Layer: White Plaster			**ND**				
Layer: Paint			**ND**				
Total Composite Values of Fibrous Components:		**Asbestos (ND)**					
Cellulose (Trace)							
PJ39403-09B	12094218						
Layer: White Plaster			**ND**				
Layer: Paint			**ND**				
Total Composite Values of Fibrous Components:		**Asbestos (ND)**					
Cellulose (Trace)							
PJ39403-09C	12094219						
Layer: White Plaster			**ND**				
Layer: Paint			**ND**				
Total Composite Values of Fibrous Components:		**Asbestos (ND)**					
Cellulose (Trace)							
PJ39403-10A	12094220						
Layer: Blue Non-Fibrous Material			**ND**				
Total Composite Values of Fibrous Components:		**Asbestos (ND)**					

3777 Depot Road, Suite 409, Hayward, CA 94545 / Telephone: (510) 887-8828 (800) 827-FASI / Fax: (510) 887-4218

Report Number: B268328
Client Name: FACS - Fresno **Date Printed:** 11/09/18

Sample ID	Lab Number	Asbestos Type	Percent in Layer	Asbestos Type	Percent in Layer	Asbestos Type	Percent in Layer
PJ39403-11A	12094221						
Layer: White Semi-Fibrous Material			**ND**				
Layer: Grey Cementitious Material			**ND**				
Total Composite Values of Fibrous Components:		**Asbestos (ND)**					
Fibrous Glass (20 %)							
PJ39403-12A	12094222						
Layer: White Drywall			**ND**				
Layer: White Joint Compound			**ND**				
Layer: Paint			**ND**				
Total Composite Values of Fibrous Components:		**Asbestos (ND)**					
Cellulose (20 %) Fibrous Glass (10 %)							
PJ39403-12B	12094223						
Layer: White Drywall			**ND**				
Layer: White Joint Compound			**ND**				
Layer: Paint			**ND**				
Total Composite Values of Fibrous Components:		**Asbestos (ND)**					
Cellulose (20 %) Fibrous Glass (10 %)							
PJ39403-13A	12094224						
Layer: White Non-Fibrous Material			**ND**				
Total Composite Values of Fibrous Components:		**Asbestos (ND)**					
PJ39403-14A	12094225						
Layer: Blue Grout			**ND**				
Total Composite Values of Fibrous Components:		**Asbestos (ND)**					
PJ39403-15A	12094226						
Layer: White Non-Fibrous Material			**ND**				
Total Composite Values of Fibrous Components:		**Asbestos (ND)**					
PJ39403-16A	12094227						
Layer: White Non-Fibrous Material			**ND**				
Total Composite Values of Fibrous Components:		**Asbestos (ND)**					
PJ39403-17A	12094228						
Layer: Tan Drywall			**ND**				
Layer: White Plaster			**ND**				
Layer: Paint			**ND**				
Total Composite Values of Fibrous Components:		**Asbestos (ND)**					
Cellulose (20 %) Fibrous Glass (10 %)							

3777 Depot Road, Suite 409, Hayward, CA 94545 / Telephone: (510) 887-8828 (800) 827-FASI / Fax: (510) 887-4218

Report Number: B268328
Client Name: FACS - Fresno **Date Printed:** 11/09/18

Sample ID	Lab Number	Asbestos Type	Percent in Layer	Asbestos Type	Percent in Layer	Asbestos Type	Percent in Layer
PJ39403-17B	12094229						
Layer: Off-White Plaster			**ND**				
Layer: White Plaster			**ND**				
Layer: Paint			**ND**				
Total Composite Values of Fibrous Components:		**Asbestos (ND)**					
Cellulose (Trace)							
PJ39403-17C	12094230						
Layer: Tan Drywall			**ND**				
Layer: White Plaster			**ND**				
Layer: Paint			**ND**				
Total Composite Values of Fibrous Components:		**Asbestos (ND)**					
Cellulose (20 %) Fibrous Glass (10 %)							
PJ39403-18A	12094231						
Layer: Beige Baseboard			**ND**				
Layer: White Mastic			**ND**				
Total Composite Values of Fibrous Components:		**Asbestos (ND)**					
PJ39403-19A	12094232						
Layer: White Grout			**ND**				
Total Composite Values of Fibrous Components:		**Asbestos (ND)**					
PJ39403-20A	12094233						
Layer: White Grout			**ND**				
Total Composite Values of Fibrous Components:		**Asbestos (ND)**					
PJ39403-21A	12094234						
Layer: Black Coating			**ND**				
Total Composite Values of Fibrous Components:		**Asbestos (ND)**					
PJ39403-22A	12094235						
Layer: Grey Cementitious Material			**ND**				
Layer: White Cementitious Material			**ND**				
Layer: Paint			**ND**				
Total Composite Values of Fibrous Components:		**Asbestos (ND)**					
Cellulose (Trace)							
PJ39403-23A	12094236						
Layer: Grey Putty			**ND**				
Layer: Paint			**ND**				
Total Composite Values of Fibrous Components:		**Asbestos (ND)**					
Cellulose (Trace)							

3777 Depot Road, Suite 409, Hayward, CA 94545 / Telephone: (510) 887-8828 (800) 827-FASI / Fax: (510) 887-4218

Sample ID	Lab Number	Asbestos Type	Percent in Layer	Asbestos Type	Percent in Layer	Asbestos Type	Percent in Layer
PJ39403-24A	12094237						
Layer: Brown Carpet			**ND**				
Layer: Yellow Mastic			**ND**				
Total Composite Values of Fibrous Components:		**Asbestos (ND)**					
Cellulose (Trace) Synthetic (85 %)							
PJ39403-25A	12094238						
Layer: Brown Baseboard			**ND**				
Layer: White Mastic			**ND**				
Total Composite Values of Fibrous Components:		**Asbestos (ND)**					
PJ39403-26A	12094239						
Layer: White Drywall			**ND**				
Layer: Tan Fibrous Material			**ND**				
Layer: Beige Semi-Fibrous Material			**ND**				
Total Composite Values of Fibrous Components:		**Asbestos (ND)**					
Cellulose (75 %) Synthetic (3 %)							
PJ39403-26B	12094240						
Layer: White Drywall			**ND**				
Layer: Tan Fibrous Material			**ND**				
Layer: Beige Semi-Fibrous Material			**ND**				
Total Composite Values of Fibrous Components:		**Asbestos (ND)**					
Cellulose (75 %) Synthetic (3 %)							
PJ39403-27A	12094241						
Layer: Yellow Fibrous Material			**ND**				
Layer: White Non-Fibrous Material			**ND**				
Total Composite Values of Fibrous Components:		**Asbestos (ND)**					
Fibrous Glass (Trace)							
PJ39403-28A	12094242						
Layer: Blue Carpet			**ND**				
Layer: Yellow Mastic			**ND**				
Total Composite Values of Fibrous Components:		**Asbestos (ND)**					
Cellulose (Trace) Synthetic (85 %)							
PJ39403-29A	12094243						
Layer: Green Baseboard			**ND**				
Layer: White Mastic			**ND**				
Layer: White Semi-Fibrous Material			**ND**				
Total Composite Values of Fibrous Components:		**Asbestos (ND)**					
Synthetic (2 %)							
PJ39403-30A	12094244						
Layer: White Drywall			**ND**				
Layer: Tan Fibrous Material			**ND**				
Layer: Beige Semi-Fibrous Material			**ND**				
Total Composite Values of Fibrous Components:		**Asbestos (ND)**					
Cellulose (75 %) Synthetic (3 %)							

3777 Depot Road, Suite 409, Hayward, CA 94545 / Telephone: (510) 887-8828 (800) 827-FASI / Fax: (510) 887-4218

Report Number: B268328
Client Name: FACS - Fresno **Date Printed:** 11/09/18

Sample ID	Lab Number	Asbestos Type	Percent in Layer	Asbestos Type	Percent in Layer	Asbestos Type	Percent in Layer
PJ39403-30B	12094245						
Layer: White Drywall			**ND**				
Layer: Tan Fibrous Material			**ND**				
Layer: Beige Semi-Fibrous Material			**ND**				
Total Composite Values of Fibrous Components: Cellulose (75 %) Synthetic (3 %)		**Asbestos (ND)**					
PJ39403-31A	12094246						
Layer: Yellow Fibrous Material			**ND**				
Layer: White Non-Fibrous Material			**ND**				
Total Composite Values of Fibrous Components: Fibrous Glass (95 %)		**Asbestos (ND)**					
PJ39403-32A	12094247						
Layer: Black Coating			**ND**				
Total Composite Values of Fibrous Components:		**Asbestos (ND)**					
PJ39403-33A	12094248						
Layer: Blue Carpet			**ND**				
Layer: Yellow Mastic			**ND**				
Total Composite Values of Fibrous Components: Cellulose (Trace) Synthetic (85 %)		**Asbestos (ND)**					
PJ39403-34A	12094249						
Layer: Green Baseboard			**ND**				
Layer: White Mastic			**ND**				
Layer: White Semi-Fibrous Material			**ND**				
Total Composite Values of Fibrous Components: Synthetic (3 %)		**Asbestos (ND)**					
PJ39403-35A	12094250						
Layer: White Drywall			**ND**				
Layer: Tan Fibrous Material			**ND**				
Layer: Beige Semi-Fibrous Material			**ND**				
Total Composite Values of Fibrous Components: Cellulose (75 %) Synthetic (3 %)		**Asbestos (ND)**					
PJ39403-35B	12094251						
Layer: White Drywall			**ND**				
Layer: Tan Fibrous Material			**ND**				
Layer: Beige Semi-Fibrous Material			**ND**				
Total Composite Values of Fibrous Components: Cellulose (75 %) Synthetic (3 %)		**Asbestos (ND)**					
PJ39403-36A	12094252						
Layer: Yellow Fibrous Material			**ND**				
Layer: White Non-Fibrous Material			**ND**				
Total Composite Values of Fibrous Components: Fibrous Glass (95 %)		**Asbestos (ND)**					

3777 Depot Road, Suite 409, Hayward, CA 94545 / Telephone: (510) 887-8828 (800) 827-FASI / Fax: (510) 887-4218

Report Number: B268328
Client Name: FACS - Fresno **Date Printed:** 11/09/18

Sample ID	Lab Number	Asbestos Type	Percent in Layer	Asbestos Type	Percent in Layer	Asbestos Type	Percent in Layer
PJ39403-37A	12094253						
Layer: Black Coating			**ND**				
Total Composite Values of Fibrous Components:		**Asbestos (ND)**					
PJ39403-38A	12094254						
Layer: Blue Carpet			**ND**				
Layer: Yellow Mastic			**ND**				
Total Composite Values of Fibrous Components:		**Asbestos (ND)**					
Cellulose (Trace) Synthetic (85 %)							
PJ39403-39A	12094255						
Layer: Green Baseboard			**ND**				
Layer: White Mastic			**ND**				
Total Composite Values of Fibrous Components:		**Asbestos (ND)**					
PJ39403-40A	12094256						
Layer: White Drywall			**ND**				
Layer: Tan Fibrous Material			**ND**				
Layer: Beige Semi-Fibrous Material			**ND**				
Total Composite Values of Fibrous Components:		**Asbestos (ND)**					
Cellulose (75 %) Synthetic (3 %)							
PJ39403-40B	12094257						
Layer: Tan Fibrous Material			**ND**				
Layer: Beige Semi-Fibrous Material			**ND**				
Total Composite Values of Fibrous Components:		**Asbestos (ND)**					
Cellulose (95 %) Synthetic (3 %)							
PJ39403-41A	12094258						
Layer: Beige Fibrous Material			**ND**				
Layer: Paint			**ND**				
Total Composite Values of Fibrous Components:		**Asbestos (ND)**					
Cellulose (35 %) Fibrous Glass (45 %)							
PJ39403-42A	12094259						
Layer: Black Coating			**ND**				
Total Composite Values of Fibrous Components:		**Asbestos (ND)**					
PJ39403-43A	12094260						
Layer: Blue Carpet			**ND**				
Layer: Yellow Mastic			**ND**				
Total Composite Values of Fibrous Components:		**Asbestos (ND)**					
Cellulose (Trace) Synthetic (85 %)							
PJ39403-44A	12094261						
Layer: Green Baseboard			**ND**				
Layer: White Mastic			**ND**				
Total Composite Values of Fibrous Components:		**Asbestos (ND)**					

3777 Depot Road, Suite 409, Hayward, CA 94545 / Telephone: (510) 887-8828 (800) 827-FASI / Fax: (510) 887-4218

Report Number: B268328
Client Name: FACS - Fresno **Date Printed:** 11/09/18

Sample ID	Lab Number	Asbestos Type	Percent in Layer	Asbestos Type	Percent in Layer	Asbestos Type	Percent in Layer
PJ39403-45A	12094262						
Layer: White Drywall			**ND**				
Layer: Tan Fibrous Material			**ND**				
Layer: Beige Semi-Fibrous Material			**ND**				
Total Composite Values of Fibrous Components:		**Asbestos (ND)**					
Cellulose (75 %) Synthetic (3 %)							
PJ39403-45B	12094263						
Layer: White Drywall			**ND**				
Layer: Tan Fibrous Material			**ND**				
Layer: Beige Semi-Fibrous Material			**ND**				
Total Composite Values of Fibrous Components:		**Asbestos (ND)**					
Cellulose (75 %) Synthetic (3 %)							
PJ39403-46A	12094264						
Layer: Yellow Fibrous Material			**ND**				
Layer: White Non-Fibrous Material			**ND**				
Total Composite Values of Fibrous Components:		**Asbestos (ND)**					
Fibrous Glass (95 %)							
PJ39403-47A	12094265						
Layer: Black Coating			**ND**				
Total Composite Values of Fibrous Components:		**Asbestos (ND)**					
PJ39403-48A	12094266						
Layer: White Sheet Flooring			**ND**				
Layer: Fibrous Backing			**ND**				
Layer: Grey Non-Fibrous Material			**ND**				
Layer: Clear Mastic			**ND**				
Total Composite Values of Fibrous Components:		**Asbestos (ND)**					
Cellulose (20 %) Fibrous Glass (5 %) Synthetic (10 %)							
PJ39403-49A	12094267						
Layer: Black Baseboard			**ND**				
Layer: White Mastic			**ND**				
Total Composite Values of Fibrous Components:		**Asbestos (ND)**					
PJ39403-50A	12094268						
Layer: White Drywall			**ND**				
Layer: White Non-Fibrous Material			**ND**				
Layer: Paint			**ND**				
Total Composite Values of Fibrous Components:		**Asbestos (ND)**					
Cellulose (20 %) Fibrous Glass (5 %)							

3777 Depot Road, Suite 409, Hayward, CA 94545 / Telephone: (510) 887-8828 (800) 827-FASI / Fax: (510) 887-4218

Sample ID	Lab Number	Asbestos Type	Percent in Layer	Asbestos Type	Percent in Layer	Asbestos Type	Percent in Layer
PJ39403-50B	12094269						
Layer: White Drywall			**ND**				
Layer: White Non-Fibrous Material			**ND**				
Layer: Paint			**ND**				
Total Composite Values of Fibrous Components:		**Asbestos (ND)**					
Cellulose (20 %) Fibrous Glass (5 %)							
PJ39403-51A	12094270						
Layer: White Drywall			**ND**				
Layer: White Non-Fibrous Material			**ND**				
Total Composite Values of Fibrous Components:		**Asbestos (ND)**					
Cellulose (20 %)							
PJ39403-52A	12094271						
Layer: White Non-Fibrous Material			**ND**				
Total Composite Values of Fibrous Components:		**Asbestos (ND)**					
PJ39403-53A	12094272						
Layer: Grey Carpet			**ND**				
Layer: Yellow Mastic			**ND**				
Total Composite Values of Fibrous Components:		**Asbestos (ND)**					
Cellulose (Trace) Synthetic (85 %)							
PJ39403-54A	12094273						
Layer: Grey Baseboard			**ND**				
Layer: White Mastic			**ND**				
Total Composite Values of Fibrous Components:		**Asbestos (ND)**					
PJ39403-55A	12094274						
Layer: White Drywall			**ND**				
Layer: Brown Fibrous Material			**ND**				
Total Composite Values of Fibrous Components:		**Asbestos (ND)**					
Cellulose (50 %) Fibrous Glass (5 %)							
PJ39403-55B	12094275						
Layer: White Drywall			**ND**				
Layer: Tan Fibrous Material			**ND**				
Layer: Beige Semi-Fibrous Material			**ND**				
Total Composite Values of Fibrous Components:		**Asbestos (ND)**					
Cellulose (75 %) Fibrous Glass (3 %) Synthetic (3 %)							
PJ39403-56A	12094276						
Layer: White Drywall			**ND**				
Layer: Yellow Fibrous Material			**ND**				
Total Composite Values of Fibrous Components:		**Asbestos (ND)**					
Fibrous Glass (25 %)							

3777 Depot Road, Suite 409, Hayward, CA 94545 / Telephone: (510) 887-8828 (800) 827-FASI / Fax: (510) 887-4218

Report Number: B268328
Client Name: FACS - Fresno **Date Printed:** 11/09/18

Sample ID	Lab Number	Asbestos Type	Percent in Layer	Asbestos Type	Percent in Layer	Asbestos Type	Percent in Layer
PJ39403-57A	12094277						
Layer: Black Coating			**ND**				
Total Composite Values of Fibrous Components:		**Asbestos (ND)**					
PJ39403-58A	12094278						
Layer: Brown Carpet			**ND**				
Layer: Yellow Mastic			**ND**				
Total Composite Values of Fibrous Components:		**Asbestos (ND)**					
Cellulose (Trace) Synthetic (85 %)							
PJ39403-59A	12094279						
Layer: Brown Baseboard			**ND**				
Layer: White Mastic			**ND**				
Layer: White Semi-Fibrous Material			**ND**				
Total Composite Values of Fibrous Components:		**Asbestos (ND)**					
Synthetic (2 %)							
PJ39403-60A	12094280						
Layer: White Drywall			**ND**				
Layer: Tan Fibrous Material			**ND**				
Layer: Beige Semi-Fibrous Material			**ND**				
Total Composite Values of Fibrous Components:		**Asbestos (ND)**					
Cellulose (75 %) Synthetic (3 %)							
PJ39403-60B	12094281						
Layer: White Drywall			**ND**				
Layer: Tan Fibrous Material			**ND**				
Layer: Beige Semi-Fibrous Material			**ND**				
Total Composite Values of Fibrous Components:		**Asbestos (ND)**					
Cellulose (75 %) Synthetic (3 %)							
PJ39403-61A	12094282						
Layer: Yellow Fibrous Material			**ND**				
Layer: White Non-Fibrous Material			**ND**				
Total Composite Values of Fibrous Components:		**Asbestos (ND)**					
Fibrous Glass (95 %)							
PJ39403-62A	12094283						
Layer: Black Coating			**ND**				
Total Composite Values of Fibrous Components:		**Asbestos (ND)**					
PJ39403-63A	12094284						
Layer: Brown Carpet			**ND**				
Layer: Yellow Mastic			**ND**				
Total Composite Values of Fibrous Components:		**Asbestos (ND)**					
Cellulose (Trace) Synthetic (85 %)							

3777 Depot Road, Suite 409, Hayward, CA 94545 / Telephone: (510) 887-8828 (800) 827-FASI / Fax: (510) 887-4218

Sample ID	Lab Number	Asbestos Type	Percent in Layer	Asbestos Type	Percent in Layer	Asbestos Type	Percent in Layer
PJ39403-64A	12094285						
Layer: Brown Baseboard			**ND**				
Layer: White Mastic			**ND**				
Total Composite Values of Fibrous Components:		**Asbestos (ND)**					
PJ39403-65A	12094286						
Layer: White Drywall			**ND**				
Layer: Tan Fibrous Material			**ND**				
Layer: Beige Semi-Fibrous Material			**ND**				
Total Composite Values of Fibrous Components:		**Asbestos (ND)**					
Cellulose (75 %) Synthetic (3 %)							
PJ39403-66A	12094287						
Layer: Yellow Fibrous Material			**ND**				
Layer: White Non-Fibrous Material			**ND**				
Total Composite Values of Fibrous Components:		**Asbestos (ND)**					
Fibrous Glass (95 %)							
PJ39403-67A	12094288						
Layer: Black Coating			**ND**				
Total Composite Values of Fibrous Components:		**Asbestos (ND)**					
PJ39403-68A	12094289						
Layer: Green Carpet			**ND**				
Layer: Clear Mastic			**ND**				
Layer: Grey Non-Fibrous Material			**ND**				
Total Composite Values of Fibrous Components:		**Asbestos (ND)**					
Cellulose (Trace) Synthetic (85 %)							
PJ39403-69A	12094290						
Layer: Green Baseboard			**ND**				
Layer: White Mastic			**ND**				
Layer: White Semi-Fibrous Material			**ND**				
Total Composite Values of Fibrous Components:		**Asbestos (ND)**					
Synthetic (3 %)							
PJ39403-70A	12094291						
Layer: White Drywall			**ND**				
Layer: Tan Fibrous Material			**ND**				
Layer: Beige Semi-Fibrous Material			**ND**				
Total Composite Values of Fibrous Components:		**Asbestos (ND)**					
Cellulose (75 %) Fibrous Glass (5 %) Synthetic (3 %)							
PJ39403-71A	12094292						
Layer: Beige Fibrous Material			**ND**				
Layer: Paint			**ND**				
Total Composite Values of Fibrous Components:		**Asbestos (ND)**					
Cellulose (35 %) Fibrous Glass (45 %)							

3777 Depot Road, Suite 409, Hayward, CA 94545 / Telephone: (510) 887-8828 (800) 827-FASI / Fax: (510) 887-4218

Report Number: B268328
Client Name: FACS - Fresno **Date Printed:** 11/09/18

Sample ID	Lab Number	Asbestos Type	Percent in Layer	Asbestos Type	Percent in Layer	Asbestos Type	Percent in Layer
PJ39403-72A	12094293						
Layer: Black Coating			**ND**				
Total Composite Values of Fibrous Components:		**Asbestos (ND)**					
PJ39403-73A	12094294						
Layer: Green Carpet			**ND**				
Layer: Yellow Mastic			**ND**				
Total Composite Values of Fibrous Components:		**Asbestos (ND)**					
Cellulose (Trace) Synthetic (85 %)							
PJ39403-74A	12094295						
Layer: Green Baseboard			**ND**				
Layer: White Mastic			**ND**				
Total Composite Values of Fibrous Components:		**Asbestos (ND)**					
PJ39403-75A	12094296						
Layer: White Drywall			**ND**				
Layer: Tan Fibrous Material			**ND**				
Layer: Beige Semi-Fibrous Material			**ND**				
Total Composite Values of Fibrous Components:		**Asbestos (ND)**					
Cellulose (75 %) Synthetic (3 %)							
PJ39403-75B	12094297						
Layer: White Drywall			**ND**				
Layer: Tan Fibrous Material			**ND**				
Layer: Beige Semi-Fibrous Material			**ND**				
Total Composite Values of Fibrous Components:		**Asbestos (ND)**					
Cellulose (75 %) Synthetic (3 %)							
PJ39403-76A	12094298						
Layer: Yellow Fibrous Material			**ND**				
Layer: White Non-Fibrous Material			**ND**				
Total Composite Values of Fibrous Components:		**Asbestos (ND)**					
Fibrous Glass (95 %)							
PJ39403-77A	12094299						
Layer: Black Coating			**ND**				
Total Composite Values of Fibrous Components:		**Asbestos (ND)**					
PJ39403-78A	12094300						
Layer: Brown Carpet			**ND**				
Layer: White Mastic			**ND**				
Total Composite Values of Fibrous Components:		**Asbestos (ND)**					
Cellulose (Trace) Synthetic (85 %)							

3777 Depot Road, Suite 409, Hayward, CA 94545 / Telephone: (510) 887-8828 (800) 827-FASI / Fax: (510) 887-4218

Report Number: B268328
Client Name: FACS - Fresno **Date Printed:** 11/09/18

Sample ID	Lab Number	Asbestos Type	Percent in Layer	Asbestos Type	Percent in Layer	Asbestos Type	Percent in Layer
PJ39403-79A	12094301						
Layer: Brown Baseboard			**ND**				
Layer: White Mastic			**ND**				
Total Composite Values of Fibrous Components:		**Asbestos (ND)**					
PJ39403-80A	12094302						
Layer: Black Coating			**ND**				
Total Composite Values of Fibrous Components:		**Asbestos (ND)**					
PJ39403-81A	12094303						
Layer: Beige Fibrous Material			**ND**				
Layer: Paint			**ND**				
Total Composite Values of Fibrous Components:		**Asbestos (ND)**					
Cellulose (80 %)							
PJ39403-82A	12094304						
Layer: White Non-Fibrous Material			**ND**				
Total Composite Values of Fibrous Components:		**Asbestos (ND)**					
PJ39403-83A	12094305						
Layer: Grey Carpet			**ND**				
Layer: Yellow Mastic			**ND**				
Total Composite Values of Fibrous Components:		**Asbestos (ND)**					
Cellulose (Trace) Synthetic (85 %)							
PJ39403-84A	12094306						
Layer: Grey Baseboard			**ND**				
Layer: White Mastic			**ND**				
Layer: White Semi-Fibrous Material			**ND**				
Total Composite Values of Fibrous Components:		**Asbestos (ND)**					
Synthetic (2 %)							
PJ39403-85A	12094307						
Layer: White Drywall			**ND**				
Layer: Tan Fibrous Material			**ND**				
Total Composite Values of Fibrous Components:		**Asbestos (ND)**					
Cellulose (70 %) Fibrous Glass (10 %)							
PJ39403-85B	12094308						
Layer: Tan Fibrous Material			**ND**				
Total Composite Values of Fibrous Components:		**Asbestos (ND)**					
Cellulose (99 %)							
PJ39403-86A	12094309						
Layer: Beige Fibrous Material			**ND**				
Layer: Paint			**ND**				
Total Composite Values of Fibrous Components:		**Asbestos (ND)**					
Cellulose (35 %) Fibrous Glass (45 %)							

3777 Depot Road, Suite 409, Hayward, CA 94545 / Telephone: (510) 887-8828 (800) 827-FASI / Fax: (510) 887-4218

Sample ID	Lab Number	Asbestos Type	Percent in Layer	Asbestos Type	Percent in Layer	Asbestos Type	Percent in Layer
PJ39403-87A	12094310						
Layer: Grey Sheet Flooring			**ND**				
Layer: Fibrous Backing			**ND**				
Layer: Yellow Mastic			**ND**				
Total Composite Values of Fibrous Components:		**Asbestos (ND)**					
Cellulose (Trace) Synthetic (80 %)							
PJ39403-88A	12094311						
Layer: Grey Non-Fibrous Material			**ND**				
Layer: Off-White Mastic			**ND**				
Total Composite Values of Fibrous Components:		**Asbestos (ND)**					
Cellulose (Trace)							
PJ39403-89A	12094312						
Layer: White Semi-Fibrous Material			**ND**				
Layer: Off-White Non-Fibrous Material			**ND**				
Total Composite Values of Fibrous Components:		**Asbestos (ND)**					
Cellulose (Trace) Fibrous Glass (5 %)							
PJ39403-89B	12094313						
Layer: Off-White Non-Fibrous Material			**ND**				
Layer: Yellow Mastic			**ND**				
Layer: White Drywall			**ND**				
Total Composite Values of Fibrous Components:		**Asbestos (ND)**					
Cellulose (20 %) Fibrous Glass (10 %)							
PJ39403-90A	12094314						
Layer: Off-White Sheet Flooring			**ND**				
Layer: Fibrous Backing			**ND**				
Layer: Yellow Mastic			**ND**				
Total Composite Values of Fibrous Components:		**Asbestos (ND)**					
Cellulose (20 %) Fibrous Glass (5 %) Synthetic (10 %)							
PJ39403-91A	12094315						
Layer: Grey Carpet			**ND**				
Layer: Off-White Mastic			**ND**				
Total Composite Values of Fibrous Components:		**Asbestos (ND)**					
Cellulose (Trace) Synthetic (85 %)							
PJ39403-92A	12094316						
Layer: Blue Non-Fibrous Material			**ND**				
Layer: Off-White Mastic			**ND**				
Total Composite Values of Fibrous Components:		**Asbestos (ND)**					
Cellulose (Trace)							
PJ39403-93A	12094317						
Layer: Tan Fibrous Material			**ND**				
Layer: Paint			**ND**				
Total Composite Values of Fibrous Components:		**Asbestos (ND)**					
Cellulose (95 %)							

3777 Depot Road, Suite 409, Hayward, CA 94545 / Telephone: (510) 887-8828 (800) 827-FASI / Fax: (510) 887-4218

Report Number: B268328
Client Name: FACS - Fresno **Date Printed:** 11/09/18

Sample ID	Lab Number	Asbestos Type	Percent in Layer	Asbestos Type	Percent in Layer	Asbestos Type	Percent in Layer
PJ39403-93B	12094318						
Layer: Tan Fibrous Material			**ND**				
Total Composite Values of Fibrous Components: Cellulose (99 %)		**Asbestos (ND)**					
PJ39403-94A	12094319						
Layer: Yellow Fibrous Material			**ND**				
Layer: Paint			**ND**				
Total Composite Values of Fibrous Components: Cellulose (Trace) Fibrous Glass (99 %)		**Asbestos (ND)**					
PJ39403-95A	12094320						
Layer: Black Non-Fibrous Material			**ND**				
Total Composite Values of Fibrous Components: Cellulose (Trace)		**Asbestos (ND)**					
PJ39403-96A	12094321						
Layer: Grey Sheet Flooring			**ND**				
Layer: Fibrous Backing			**ND**				
Layer: Yellow Mastic			**ND**				
Layer: Grey Non-Fibrous Material			**ND**				
Total Composite Values of Fibrous Components: Cellulose (Trace) Synthetic (80 %)		**Asbestos (ND)**					
PJ39403-97A	12094322						
Layer: Blue Non-Fibrous Material			**ND**				
Layer: Off-White Mastic			**ND**				
Total Composite Values of Fibrous Components: Cellulose (Trace)		**Asbestos (ND)**					
PJ39403-98A	12094323						
Layer: Tan Fibrous Material			**ND**				
Layer: Off-White Mastic			**ND**				
Layer: White Non-Fibrous Material			**ND**				
Total Composite Values of Fibrous Components: Cellulose (70 %)		**Asbestos (ND)**					
PJ39403-98B	12094324						
Layer: Tan Fibrous Material			**ND**				
Layer: Grey Mastic			**ND**				
Layer: White Non-Fibrous Material			**ND**				
Total Composite Values of Fibrous Components: Cellulose (70 %)		**Asbestos (ND)**					
PJ39403-99A	12094325						
Layer: Tan Fibrous Material			**ND**				
Layer: Paint			**ND**				
Total Composite Values of Fibrous Components: Cellulose (95 %)		**Asbestos (ND)**					

3777 Depot Road, Suite 409, Hayward, CA 94545 / Telephone: (510) 887-8828 (800) 827-FASI / Fax: (510) 887-4218

Report Number: B268328
Client Name: FACS - Fresno **Date Printed:** 11/09/18

Sample ID	Lab Number	Asbestos Type	Percent in Layer	Asbestos Type	Percent in Layer	Asbestos Type	Percent in Layer
PJ39403-100A	12094326						
Layer: White Non-Fibrous Material			**ND**				
Layer: Paint			**ND**				
Total Composite Values of Fibrous Components: Cellulose (Trace)		**Asbestos (ND)**					
PJ39403-101A	12094327						
Layer: Grey Non-Fibrous Material			**ND**				
Layer: Paint			**ND**				
Total Composite Values of Fibrous Components: Cellulose (Trace)		**Asbestos (ND)**					
PJ39403-102A	12094328						
Layer: Brown Non-Fibrous Material			**ND**				
Layer: Paint			**ND**				
Total Composite Values of Fibrous Components: Cellulose (Trace)		**Asbestos (ND)**					
PJ39403-103A	12094329						
Layer: Grey Non-Fibrous Material		Chrysotile	**2 %**				
Layer: Paint			**ND**				
Total Composite Values of Fibrous Components: Cellulose (Trace)		**Asbestos (2%)**					
PJ39403-104A	12094330						
Layer: Grey Non-Fibrous Material		Chrysotile	**2 %**				
Layer: Paint			**ND**				
Total Composite Values of Fibrous Components: Cellulose (Trace)		**Asbestos (2%)**					
PJ39403-105A	12094331						
Layer: Grey Non-Fibrous Material			**ND**				
Layer: Paint			**ND**				
Total Composite Values of Fibrous Components: Cellulose (Trace)		**Asbestos (ND)**					
PJ39403-106A	12094332						
Layer: Grey Non-Fibrous Material			**ND**				
Layer: Paint			**ND**				
Total Composite Values of Fibrous Components: Cellulose (Trace)		**Asbestos (ND)**					
PJ39403-107A	12094333						
Layer: White Non-Fibrous Material			**ND**				
Total Composite Values of Fibrous Components: Cellulose (Trace)		**Asbestos (ND)**					
PJ39403-108A	12094334						
Layer: Grey Non-Fibrous Material			**ND**				
Layer: Paint			**ND**				
Total Composite Values of Fibrous Components: Cellulose (Trace)		**Asbestos (ND)**					

3777 Depot Road, Suite 409, Hayward, CA 94545 / Telephone: (510) 887-8828 (800) 827-FASI / Fax: (510) 887-4218

Report Number: B268328
Client Name: FACS - Fresno **Date Printed:** 11/09/18

Sample ID	Lab Number	Asbestos Type	Percent in Layer	Asbestos Type	Percent in Layer	Asbestos Type	Percent in Layer
PJ39403-109A	12094335						
Layer: Grey Non-Fibrous Material			**ND**				
Layer: Paint			**ND**				
Total Composite Values of Fibrous Components: Cellulose (Trace)		**Asbestos (ND)**					
PJ39403-110A	12094336						
Layer: Grey Non-Fibrous Material			**ND**				
Layer: Paint			**ND**				
Total Composite Values of Fibrous Components: Cellulose (Trace)		**Asbestos (ND)**					
PJ39403-111A	12094337						
Layer: Grey Non-Fibrous Material			**ND**				
Layer: Paint			**ND**				
Total Composite Values of Fibrous Components: Cellulose (Trace)		**Asbestos (ND)**					
PJ39403-112A	12094338						
Layer: White Non-Fibrous Material			**ND**				
Layer: Paint			**ND**				
Total Composite Values of Fibrous Components: Cellulose (Trace)		**Asbestos (ND)**					
PJ39403-113A	12094339						
Layer: Grey Non-Fibrous Material			**ND**				
Layer: Paint			**ND**				
Total Composite Values of Fibrous Components: Cellulose (Trace)		**Asbestos (ND)**					
PJ39403-114A	12094340						
Layer: Grey Non-Fibrous Material		Chrysotile	**2 %**				
Layer: Paint			**ND**				
Total Composite Values of Fibrous Components: Cellulose (Trace)		**Asbestos (2%)**					
PJ39403-115A	12094341						
Layer: Grey Non-Fibrous Material		Chrysotile	**2 %**				
Layer: Paint			**ND**				
Total Composite Values of Fibrous Components: Cellulose (Trace)		**Asbestos (2%)**					
PJ39403-116A	12094342						
Layer: Grey Non-Fibrous Material			**ND**				
Layer: Paint			**ND**				
Total Composite Values of Fibrous Components: Cellulose (Trace)		**Asbestos (ND)**					

3777 Depot Road, Suite 409, Hayward, CA 94545 / Telephone: (510) 887-8828 (800) 827-FASI / Fax: (510) 887-4218

Report Number: B268328
Client Name: FACS - Fresno **Date Printed:** 11/09/18

Sample ID	Lab Number	Asbestos Type	Percent in Layer	Asbestos Type	Percent in Layer	Asbestos Type	Percent in Layer
PJ39403-117A	12094343						
Layer: Grey Non-Fibrous Material			**ND**				
Layer: Paint			**ND**				
Total Composite Values of Fibrous Components: Cellulose (Trace)		**Asbestos (ND)**					
PJ39403-118A	12094344						
Layer: Grey Non-Fibrous Material			**ND**				
Layer: Paint			**ND**				
Total Composite Values of Fibrous Components: Cellulose (Trace)		**Asbestos (ND)**					
PJ39403-119A	12094345						
Layer: Grey Non-Fibrous Material		Chrysotile	**2 %**				
Layer: Paint			**ND**				
Total Composite Values of Fibrous Components: Cellulose (Trace)		**Asbestos (2%)**					
PJ39403-120A	12094346						
Layer: Grey Non-Fibrous Material		Chrysotile	**2 %**				
Layer: Paint			**ND**				
Total Composite Values of Fibrous Components: Cellulose (Trace)		**Asbestos (2%)**					
PJ39403-121A	12094347						
Layer: Brown Non-Fibrous Material			**ND**				
Layer: Paint			**ND**				
Total Composite Values of Fibrous Components: Cellulose (Trace)		**Asbestos (ND)**					
PJ39403-122A	12094348						
Layer: Grey Non-Fibrous Material		Chrysotile	**2 %**				
Layer: Paint			**ND**				
Total Composite Values of Fibrous Components: Cellulose (Trace)		**Asbestos (2%)**					
PJ39403-123A	12094349						
Layer: Grey Non-Fibrous Material		Chrysotile	**2 %**				
Layer: Paint			**ND**				
Total Composite Values of Fibrous Components: Cellulose (Trace)		**Asbestos (2%)**					
PJ39403-123B	12094350						
Layer: Grey Non-Fibrous Material		Chrysotile	**2 %**				
Layer: Paint			**ND**				
Total Composite Values of Fibrous Components: Cellulose (Trace)		**Asbestos (2%)**					

3777 Depot Road, Suite 409, Hayward, CA 94545 / Telephone: (510) 887-8828 (800) 827-FASI / Fax: (510) 887-4218

Report Number: B268328
Client Name: FACS - Fresno **Date Printed:** 11/09/18

Sample ID	Lab Number	Asbestos Type	Percent in Layer	Asbestos Type	Percent in Layer	Asbestos Type	Percent in Layer
PJ39403-124A	12094351						
Layer: Tan Fibrous Material			**ND**				
Layer: Paint			**ND**				
Total Composite Values of Fibrous Components: Cellulose (95 %)		**Asbestos (ND)**					
PJ39403-125A	12094352						
Layer: Grey Non-Fibrous Material			**ND**				
Layer: Paint			**ND**				
Total Composite Values of Fibrous Components: Cellulose (Trace)		**Asbestos (ND)**					
PJ39403-126A	12094353						
Layer: Grey Non-Fibrous Material			**ND**				
Layer: Paint			**ND**				
Total Composite Values of Fibrous Components: Cellulose (Trace)		**Asbestos (ND)**					
PJ39403-127A	12094354						
Layer: Grey Non-Fibrous Material			**ND**				
Layer: Paint			**ND**				
Total Composite Values of Fibrous Components: Cellulose (Trace)		**Asbestos (ND)**					
PJ39403-128A	12094355						
Layer: Grey Non-Fibrous Material			**ND**				
Layer: Paint			**ND**				
Total Composite Values of Fibrous Components: Cellulose (Trace)		**Asbestos (ND)**					
PJ39403-129A	12094356						
Layer: Tan Fibrous Material			**ND**				
Layer: Paint			**ND**				
Total Composite Values of Fibrous Components: Cellulose (95 %)		**Asbestos (ND)**					
PJ39403-130A	12094357						
Layer: Grey Mastic			**ND**				
Total Composite Values of Fibrous Components: Cellulose (Trace)		**Asbestos (ND)**					
PJ39403-131A	12094358						
Layer: White Non-Fibrous Material			**ND**				
Layer: White Fibrous Material			**ND**				
Layer: Grey Non-Fibrous Material			**ND**				
Total Composite Values of Fibrous Components: Cellulose (Trace) Synthetic (30 %)		**Asbestos (ND)**					

3777 Depot Road, Suite 409, Hayward, CA 94545 / Telephone: (510) 887-8828 (800) 827-FASI / Fax: (510) 887-4218

Report Number: B268328
Client Name: FACS - Fresno **Date Printed:** 11/09/18

Sample ID	Lab Number	Asbestos Type	Percent in Layer	Asbestos Type	Percent in Layer	Asbestos Type	Percent in Layer
PJ39403-132A	12094359						
Layer: Grey Mastic		Chrysotile	**2 %**				
Layer: Paint			**ND**				
Total Composite Values of Fibrous Components: Cellulose (Trace)		**Asbestos (2%)**					
PJ39403-133A	12094360						
Layer: Grey Mastic			**ND**				
Layer: Paint			**ND**				
Total Composite Values of Fibrous Components: Cellulose (Trace)		**Asbestos (ND)**					
PJ39403-134A	12094361						
Layer: Grey Mastic			**ND**				
Layer: Paint			**ND**				
Total Composite Values of Fibrous Components: Cellulose (Trace)		**Asbestos (ND)**					
PJ39403-135A	12094362						
Layer: Grey Mastic			**ND**				
Layer: Paint			**ND**				
Total Composite Values of Fibrous Components: Cellulose (Trace)		**Asbestos (ND)**					
PJ39403-136A	12094363						
Layer: Grey Mastic			**ND**				
Layer: Yellow Foam			**ND**				
Layer: Paint			**ND**				
Total Composite Values of Fibrous Components: Cellulose (Trace)		**Asbestos (ND)**					
PJ39403-137A	12094364						
Layer: Grey Mastic			**ND**				
Layer: Yellow Foam			**ND**				
Layer: Paint			**ND**				
Total Composite Values of Fibrous Components: Cellulose (Trace)		**Asbestos (ND)**					
PJ39403-138A	12094365						
Layer: Grey Mastic		Chrysotile	**2 %**				
Layer: Yellow Foam			**ND**				
Layer: Paint			**ND**				
Total Composite Values of Fibrous Components: Cellulose (Trace)		**Asbestos (Trace)**					
PJ39403-139A	12094366						
Layer: Grey Mastic			**ND**				
Layer: Yellow Foam			**ND**				
Layer: Paint			**ND**				
Total Composite Values of Fibrous Components: Cellulose (Trace)		**Asbestos (ND)**					

3777 Depot Road, Suite 409, Hayward, CA 94545 / Telephone: (510) 887-8828 (800) 827-FASI / Fax: (510) 887-4218

Report Number: B268328
Client Name: FACS - Fresno **Date Printed:** 11/09/18

Sample ID	Lab Number	Asbestos Type	Percent in Layer	Asbestos Type	Percent in Layer	Asbestos Type	Percent in Layer
PJ39403-140A	12094367						
Layer: Grey Mastic		Chrysotile	**2 %**				
Layer: Paint			**ND**				
Total Composite Values of Fibrous Components: Cellulose (Trace)		**Asbestos (2%)**					
PJ39403-141A	12094368						
Layer: Brown Mastic			**ND**				
Layer: Paint			**ND**				
Total Composite Values of Fibrous Components: Cellulose (Trace)		**Asbestos (ND)**					
PJ39403-142A	12094369						
Layer: Grey Mastic			**ND**				
Layer: Yellow Foam			**ND**				
Layer: Paint			**ND**				
Total Composite Values of Fibrous Components: Cellulose (Trace)		**Asbestos (ND)**					
PJ39403-143A	12094370						
Layer: Grey Mastic		Chrysotile	**2 %**				
Layer: Paint			**ND**				
Total Composite Values of Fibrous Components: Cellulose (Trace)		**Asbestos (2%)**					
PJ39403-144A	12094371						
Layer: Off-White Mastic		Chrysotile	**2 %**				
Layer: Yellow Foam			**ND**				
Layer: Paint			**ND**				
Total Composite Values of Fibrous Components: Cellulose (Trace)		**Asbestos (Trace)**					

Tad Thrower

Tad Thrower, Laboratory Supervisor, Hayward Laboratory

Note: Limit of Quantification ('LOQ') = 1%. 'Trace' denotes the presence of asbestos below the LOQ. 'ND' = 'None Detected'.

3777 Depot Road, Suite 409, Hayward, CA 94545 / Telephone: (510) 887-8828 (800) 827-FASI / Fax: (510) 887-4218

Appendix B

XRF Lead Testing Data, Chain of Custody, Lead Bulk Sample Chain of Custody, Laboratory Results Report and CDPH Form 8552

Hazard Management Services

A Division of Forensic Analytical Consulting Services

A Division of FACS

Fresno Unified School District

Addams Elementary School

Building B & Portables

Lead Based Paint Survey By XRF

November 1, 2018

SURVEY BY

HAZARD MANAGEMENT SERVICES
A DIVISION OF
FORENSIC ANALYTICAL CONSULTING SERVICES
371 E BULLARD AVE., SUITE 109
FRESNO, CA 93710
(559) 436-0277

Hazard Management Services

A Division of Forensic Analytical Consulting Services

A Division of FACS

Fresno Unified School District

Addams Elementary School

Building B & Portables

Lead Based Paint Survey By XRF

REVIEWED BY

Joseph Vuglia

CDPH CERTIFIED LEAD INSPECTOR/ASSESSOR
CERT. #IA-22314 EXPIRATION 8-10-19

LEAD-BASED PAINT (LBP) INSPECTION AND SAMPLE PROTOCOL

The lead-based paint survey at this site was conducted using the following inspection and sampling protocol:

DEFINITION OF LEAD-BASED PAINT

EPA/HUD/DHS: Paint which contains at least 1.0 mg/cm^2, 5000 parts per million, or 0.5% by weight of lead.

OSHA/Cal/OSHA: Lead containing paint which contains any detectable lead.

Cal/OSHA requires notification if over 100 sq. ft. of lead-based paint (1.0 mg/cm^2 or higher) or presumed LBP (untested paint) is disturbed.

CONSTRUCTION YEARS

The building construction years were provided by FUSD, were listed on manufacturer's tags (portables), or were unknown to the inspector.

The condition of the paint was classified as follows:

INTACT: Paint is in good condition, with no chips, abrasions or delamination.

FAIR: Paint is reasonably intact, with minor chips and slight abrasions.

POOR: Paint is chipped, scraped, delaminated, or peeling.

EQUIPMENT AND CALIBRATION

Lead-based paint determination was performed using a Niton X-Ray Fluorescence (XRF) detector. Verification of calibration was performed prior to, and immediately following testing.

DISCLAIMER

Hazard Management Services, Inc. (HMS, Inc.) has made every effort to sample every non-intact paint type and substrate within the structures at this site. If a painted surface that will be disturbed is not intact, and the paint is not listed in this report, the paint must be assumed to contain lead.

Hazard Management Services
A Division of Forensic Analytical Consulting Services

SURVEY FOR LEAD BASED PAINT
Fresno Unified School District

A Division of FACS

Site Name:	Addams Elementary School								**Date:**	November 1, 2018
Address:	2117 W. McKinley Ave., Fresno, CA 93728								**HMS Job #:**	Pj39403
Start Time:	9:20	**Calibration:**	**1.04 =**	1.0	**1.04 =**	0.9	**1.04 =**	0.9	**Technician:**	Jacob Sharp - 28717
End Time:	12:20	**Calibration:**	**1.04 =**	0.9	**1.04 =**	1.0	**1.04 =**	0.8	**Inspector/Assessor:**	Joseph M Vuglia - 22314
Niton XLP 300 22263		**See Lead-Based Paint Inspections, Sampling Protocol, & Definition of Lead-Based Paint on Page 1**							**Condition Codes: I = Intact, F = Fair, P = Poor**	

No.	Sample Location	Component	Substrate	Color	Condition	XRF Result (mg/cm2)
1.	**Building B – Interior (Built Date Unknown)**					
2.	Administration - South Side West End	Door	Metal	White	I	0.00
3.	Administration - South Side West End	Window Frame	Metal	White	I	0.00
4.	Administration - East Side North End	Window Frame	Metal	White	I	0.00
5.	Hallway - North Side West End	Wall	Plaster	Cream	I	0.00
6.	Hallway - South Side West End At Vice Principal 2	Door Frame	Metal	White	I	0.00
7.	Hallway - South Side West End At Vice Principal 2	Door	Wood	Varnish	I	0.00
8.	Hallway - South Side West End At Vice Principal 2	Door Window	Metal	White	I	0.00
9.	Hallway - North Side Center	Door	Metal	White	I	0.00
10.	Restroom Foyer - North Side East End	Wall	Drywall	White	I	0.00
11.	Work Room - East Side Center	Wall	Concrete	White	I	0.00
12.	Men's Restroom - East Side Center	Wall	Drywall	White	I	0.00
13.	Men's Restroom - East Side Center	Wall	Fiber Reinf. Panel	White	I	0.00
14.	Men's Restroom - East Side	Sink	Porcelain	White	I	**11.00**
15.	Men's Restroom - East Side	Toilet	Porcelain	White	I	0.01
16.	Men's Restroom - North Side	Window Sill	Wood	White	I	0.08
17.	Men's Restroom - North Side	Window Frame	Wood	White	I	0.18
18.	Men's Restroom - North Side	Window	Wood	White	I	0.17

Hazard Management Services
A Division of Forensic Analytical Consulting Services

SURVEY FOR LEAD BASED PAINT
Fresno Unified School District

A Division of FACS

Site Name:	Addams Elementary School								**Date:**	November 1, 2018
Address:	2117 W. McKinley Ave., Fresno, CA 93728								**HMS Job #:**	Pj39403
Start Time:	9:20	**Calibration:**	**1.04 =**	1.0	**1.04 =**	0.9	**1.04 =**	0.9	**Technician:**	Jacob Sharp - 28717
End Time:	12:20	**Calibration:**	**1.04 =**	0.9	**1.04 =**	1.0	**1.04 =**	0.8	**Inspector/Assessor:**	Joseph M Vuglia - 22314
Niton XLP 300 22263		**See Lead-Based Paint Inspections, Sampling Protocol, & Definition of Lead-Based Paint on Page 1**							**Condition Codes: I = Intact, F = Fair, P = Poor**	

No.	Sample Location	Component	Substrate	Color	Condition	XRF Result (mg/cm2)
19.	**Building B – Interior (Continued)**					
20.	Men's Restroom - North Side Center	Floor	Epoxy	Blue	I	0.00
21.	Nurse Restroom – At Center	Floor	Ceramic Tile - 2"	Gray	I	0.00
22.	Nurse Restroom - East Side Center	Wall	Ceramic Tile - 6"	Cream	I	0.01
23.	Nurse Restroom - East Side Center	Wall	Plaster	Off-White	I	0.00
24.	Nurse Restroom - East Side Center	Wall	Fiber Reinf. Panel	White	I	0.00
25.	Nurse Restroom - North Side	Sink	Porcelain	White	I	0.00
26.	Nurse Restroom - South Side	Toilet	Porcelain	White	I	0.01
27.	**Building B – Exterior**					
28.	South Side West End	Door	Metal	Blue	I	0.00
29.	South Side West End	Door Frame	Metal	Blue	I	0.00
30.	South Side West End	Wall	Stucco	Tan	I	0.00
31.	South Side West End	Window	Wood	Tan	I	0.00
32.	South Side West End	Window Screen	Metal	Tan	I	0.00
33.	North Side Center	Window Lite	Metal	Blue	I	0.00
34.	North Side Center	Window	Metal	Tan	I	**4.00**
35.	North Side Center	Window Sill	Wood	Tan	I	**8.10**
36.	North Side Center	Window Frame	Wood	Tan	I	**7.60**

Hazard Management Services
A Division of Forensic Analytical Consulting Services

SURVEY FOR LEAD BASED PAINT
Fresno Unified School District

A Division of FACS

Site Name:	Addams Elementary School								**Date:**	November 1, 2018
Address:	2117 W. McKinley Ave., Fresno, CA 93728								**HMS Job #:**	Pj39403
Start Time:	9:20	**Calibration:**	**1.04 =**	1.0	**1.04 =**	0.9	**1.04 =**	0.9	**Technician:**	Jacob Sharp - 28717
End Time:	12:20	**Calibration:**	**1.04 =**	0.9	**1.04 =**	1.0	**1.04 =**	0.8	**Inspector/Assessor:**	Joseph M Vuglia - 22314
Niton XLP 300 22263		**See Lead-Based Paint Inspections, Sampling Protocol, & Definition of Lead-Based Paint on Page 1**							**Condition Codes: I = Intact, F = Fair, P = Poor**	

No.	Sample Location	Component	Substrate	Color	Condition	XRF Result (mg/cm2)
37.	**PCR 650 (with PCR 649) - Interior (1988)**					
38.	South Side East End	Door Frame	Metal	Brown	I	0.02
39.	South Side East End	Door	Metal	White	I	0.01
40.	South Side East Of Center	Wall	Tackboard	Beige	I	0.00
41.	**PCR 650 (with PCR 649) - Exterior**					
42.	South Side East End	Door	Metal	Blue	I	0.02
43.	South Side East End	Door Frame	Metal	Blue	I	0.01
44.	South Side East End	Wall	Wood	Tan	I	0.00
45.	South Side East End	Building Frame	Metal	Tan	I	0.00
46.	South Side East End	Downspout	Metal	Tan	I	0.08
47.	South Side East End	Overhang	Metal	Tan	I	0.08
48.	South Side East End	Gutter	Metal	Blue	I	0.02
49.	South Side East End	Roof Flashing	Metal	Blue	I	0.02
50.	South Side West End	Window Trim	Wood	Blue	I	0.04
51.	North Side Center	HVAC Cabinet	Metal	Tan	I	0.00
52.	**PCR 1178 (with PCR 1176, 1177, 1179, 1180) – Exterior (1998)**					
53.	North Side West End	Door	Metal	Blue	I	0.00
54.	North Side West End	Door Frame	Metal	Blue	I	0.00

Hazard Management Services
A Division of Forensic Analytical Consulting Services

SURVEY FOR LEAD BASED PAINT
Fresno Unified School District

A Division of FACS

Site Name:	Addams Elementary School								**Date:**	November 1, 2018
Address:	2117 W. McKinley Ave., Fresno, CA 93728								**HMS Job #:**	Pj39403
Start Time:	9:20	**Calibration:**	**1.04 =**	1.0	**1.04 =**	0.9	**1.04 =**	0.9	**Technician:**	Jacob Sharp - 28717
End Time:	12:20	**Calibration:**	**1.04 =**	0.9	**1.04 =**	1.0	**1.04 =**	0.8	**Inspector/Assessor:**	Joseph M Vuglia - 22314
Niton XLP 300 22263		**See Lead-Based Paint Inspections, Sampling Protocol, & Definition of Lead-Based Paint on Page 1**							**Condition Codes: I = Intact, F = Fair, P = Poor**	

No.	Sample Location	Component	Substrate	Color	Condition	XRF Result (mg/cm2)
55.	**PCR 1178 (with PCR 1176, 1177, 1179, 1180) – Exterior (Cont.)**					
56.	North Side West End	Door Trim	Wood	Blue	I	0.00
57.	North Side West End	Wall	Wood	Tan	I	0.00
58.	North Side West End	Building Frame	Metal	Tan	I	0.00
59.	North Side East End	Window Frame	Wood	Blue	I	0.00
60.	East Side Center	Wall	Wood	Black	I	0.00
61.	East Side Center	Wall	Wood	Brown	I	0.00
62.	East Side Center	Wall	Wood	Blue	I	0.00
63.	East Side Center	Wall	Wood	Teal	I	0.00
64.	East Side Center	Wall	Wood	White	I	0.00
65.	East Side Center	Wall	Wood	Pink	I	0.00
66.	East Side Center	Wall	Wood	Green	I	0.00
67.	East Side Center	Wall	Wood	Gold	I	0.00
68.	North Side East End	Overhang	Metal	Tan	I	0.00
69.	North Side East End	Roof Flashing	Metal	Blue	I	0.00
70.	South Side East End	Downspout	Metal	Tan	I	0.00
71.	South Side Center	HVAC Cabinet	Metal	Tan	I	0.00
72.						

Hazard Management Services
A Division of Forensic Analytical Consulting Services

SURVEY FOR LEAD BASED PAINT
Fresno Unified School District

A Division of FACS

Site Name:	Addams Elementary School								**Date:**	November 1, 2018
Address:	2117 W. McKinley Ave., Fresno, CA 93728								**HMS Job #:**	Pj39403
Start Time:	9:20	**Calibration:**	**1.04 =**	1.0	**1.04 =**	0.9	**1.04 =**	0.9	**Technician:**	Jacob Sharp - 28717
End Time:	12:20	**Calibration:**	**1.04 =**	0.9	**1.04 =**	1.0	**1.04 =**	0.8	**Inspector/Assessor:**	Joseph M Vuglia - 22314
Niton XLP 300 22263		**See Lead-Based Paint Inspections, Sampling Protocol, & Definition of Lead-Based Paint on Page 1**							**Condition Codes: I = Intact, F = Fair, P = Poor**	

No.	Sample Location	Component	Substrate	Color	Condition	XRF Result (mg/cm2)
73.	**PCR 1176 - Exterior (1998)**					
74.	North Side West East	Door Frame	Metal	Brown	I	0.00
75.	North Side West End	Door	Metal	White	I	0.00
76.	North Side West End	Window Frame	Wood	White	I	0.00
77.	**PCR 716 – Interior (1989)**					
78.	South Side East End	Door Frame	Metal	Brown	I	0.00
79.	South Side East End	Door	Metal	Black	I	0.00
80.	South Side East OF Center	Wall	Tackboard	Beige	I	0.00
81.	**PCR 716 – Exterior**					
82.	South Side East End	Door	Metal	Blue	I	0.00
83.	South Side East End	Door Frame	Metal	Blue	I	0.00
84.	South Side East End	Wall	Wood	Tan	I	0.00
85.	South Side East End	Downspout	Metal	Tan	I	0.00
86.	South Side West End	Window Frame	Wood	Blue	I	0.00
87.	South Side West End	Window Screen	Metal	Black	I	0.00
88.	South Side East End	Handrail	Metal	Blue	I	0.00
89.	South Side East End	Overhang	Metal	Tan	I	0.00
90.	South Side East End	Gutter	Metal	Blue	I	0.01

Hazard Management Services
A Division of Forensic Analytical Consulting Services

SURVEY FOR LEAD BASED PAINT
Fresno Unified School District

A Division of FACS

Site Name:	Addams Elementary School								**Date:**	November 1, 2018
Address:	2117 W. McKinley Ave., Fresno, CA 93728								**HMS Job #:**	Pj39403
Start Time:	9:20	**Calibration:**	**1.04 =**	1.0	**1.04 =**	0.9	**1.04 =**	0.9	**Technician:**	Jacob Sharp - 28717
End Time:	12:20	**Calibration:**	**1.04 =**	0.9	**1.04 =**	1.0	**1.04 =**	0.8	**Inspector/Assessor:**	Joseph M Vuglia - 22314
Niton XLP 300 22263		**See Lead-Based Paint Inspections, Sampling Protocol, & Definition of Lead-Based Paint on Page 1**							**Condition Codes: I = Intact, F = Fair, P = Poor**	

No.	Sample Location	Component	Substrate	Color	Condition	XRF Result (mg/cm2)
91.	**PCR 716 – Exterior (Continued)**					
92.	South Side East End	Roof Flashing	Metal	Blue	I	0.01
93.	North Side Center	HVAC Unit	Metal	Tan	I	0.00
94.	**PCR 316 – Interior (1985)**					
95.	North Side East End	Door	Metal	White	I	0.00
96.	North Side East End	Door Frame	Metal	Brown	I	0.00
97.	North side East Of Center	Wall	Tackboard	Beige	I	0.00
98.	**PCR 316 – Exterior**					
99.	North Side East End	Door	Metal	Blue	I	0.00
100.	North Side East End	Door Frame	Metal	Blue	I	0.00
101.	North Side West End	Wall	Wood	Tan	I	0.00
102.	North Side West End	Downspout	Metal	Tan	I	0.00
103.	North Side West End	Overhang	Metal	Tan	I	0.00
104.	North Side West End	Gutter	Metal	Blue	I	0.00
105.	North Side West End	HVAC Unit	Metal	Tan	I	0.00
106.	North Side West End	Building Frame	Metal	Tan	I	0.00
107.	North Side West End	Window Trim	Wood	Blue	I	0.00
108.	North Side East End	Door Trim	Wood	Blue	I	0.00

Hazard Management Services
A Division of Forensic Analytical Consulting Services

SURVEY FOR LEAD BASED PAINT
Fresno Unified School District

A Division of FACS

Site Name:	Addams Elementary School								**Date:**	November 1, 2018
Address:	2117 W. McKinley Ave., Fresno, CA 93728								**HMS Job #:**	Pj39403
Start Time:	9:20	**Calibration:**	**1.04 =**	1.0	**1.04 =**	0.9	**1.04 =**	0.9	**Technician:**	Jacob Sharp - 28717
End Time:	12:20	**Calibration:**	**1.04 =**	0.9	**1.04 =**	1.0	**1.04 =**	0.8	**Inspector/Assessor:**	Joseph M Vuglia - 22314
Niton XLP 300 22263		**See Lead-Based Paint Inspections, Sampling Protocol, & Definition of Lead-Based Paint on Page 1**							**Condition Codes: I = Intact, F = Fair, P = Poor**	

No.	Sample Location	Component	Substrate	Color	Condition	XRF Result (mg/cm2)
109.	**PCR 378 (with PCR 423) - Interior (1986)**					
110.	North Side East End	Door	Metal	White	I	0.03
111.	North Side East End	Door Frame	Metal	Brown	I	0.00
112.	**PCR 378 (with PCR 423) - Exterior**					
113.	North Side East End	Door	Metal	Blue	I	0.00
114.	North Side East End	Door Frame	Metal	Blue	I	0.00
115.	North Side East End	Wall	Wood	Tan	I	0.00
116.	North Side East End	Building Frame	Metal	Tan	I	0.00
117.	North Side East End	Overhang	Metal	Tan	I	0.00
118.	North Side East End	Gutter	Metal	Blue	I	0.00
119.	North Side East End	Downspout	Metal	Tan	I	0.00
120.	North Side West End	Window Trim	Wood	Blue	I	0.00
121.	**PCR 542 - Interior (1987)**					
122.	East Side North End	Door	Metal	White	I	0.00
123.	East Side North End	Door Frame	Metal	Brown	I	0.01
124.	South Side Center at Restroom	Door	Metal	White	I	0.00
125.	South Side Center at Restroom	Door Frame	Metal	White	I	0.00

Site Name:	Addams Elementary School								**Date:**	November 1, 2018
Address:	2117 W. McKinley Ave., Fresno, CA 93728								**HMS Job #:**	Pj39403
Start Time:	9:20	**Calibration:**	**1.04 =**	1.0	**1.04 =**	0.9	**1.04 =**	0.9	**Technician:**	Jacob Sharp - 28717
End Time:	12:20	**Calibration:**	**1.04 =**	0.9	**1.04 =**	1.0	**1.04 =**	0.8	**Inspector/Assessor:**	Joseph M Vuglia - 22314
Niton XLP 300 22263		**See Lead-Based Paint Inspections, Sampling Protocol, & Definition of Lead-Based Paint on Page 1**							**Condition Codes: I = Intact, F = Fair, P = Poor**	

No.	Sample Location	Component	Substrate	Color	Condition	XRF Result (mg/cm2)
126.	**PCR 542 - Interior (Continued)**					
127.	West Side Center in Restroom	Wall	FRP	Cream	I	0.00
128.	West Side Center in Restroom	Sink	Porcelain	White	I	0.01
129.	West Side Center in Restroom	Toilet	Porcelain	White	I	0.02
130.	East Side South End at Wet Area	Sink	Porcelain	White	I	0.09
131.	**PCR 542 - Exterior**					
132.	West Side North End	Door	Metal	Blue	I	0.00
133.	West Side North End	Door Frame	Metal	Blue	I	0.00
134.	West Side North End	Wall	Wood	Tan	I	0.00
135.	West Side North End	Building Frame	Metal	Tan	I	0.00
136.	West Side South End	Building Frame	Metal	Tan	I	0.00
137.	West Side North End	Overhang	Metal	Tan	I	0.00
138.	West Side North End	Gutter	Metal	Blue	I	0.00
139.	West Side North End	Downspout	Metal	Tan	I	0.00
140.	West Side South End	Window Trim	Wood	Blue	I	0.00
141.	East Side Center	HVAC Unit	Metal	Tan	I	0.00
142.	**PCR L16 - Interior (1965)**					
143.	Classroom - North Side West End	Door	Metal	Brown	I	0.02

Site Name:	Addams Elementary School								**Date:**	November 1, 2018
Address:	2117 W. McKinley Ave., Fresno, CA 93728								**HMS Job #:**	Pj39403
Start Time:	9:20	**Calibration:**	**1.04 =**	1.0	**1.04 =**	0.9	**1.04 =**	0.9	**Technician:**	Jacob Sharp - 28717
End Time:	12:20	**Calibration:**	**1.04 =**	0.9	**1.04 =**	1.0	**1.04 =**	0.8	**Inspector/Assessor:**	Joseph M Vuglia - 22314
Niton XLP 300 22263		**See Lead-Based Paint Inspections, Sampling Protocol, & Definition of Lead-Based Paint on Page 1**							**Condition Codes: I = Intact, F = Fair, P = Poor**	

No.	Sample Location	Component	Substrate	Color	Condition	XRF Result (mg/cm2)
144.	**PCR L16 - Interior (Continued)**					
145.	Classroom - North Side West End	Door Frame	Metal	White	I	0.04
146.	Restroom - South Side West End	Door	Metal	White	I	0.17
147.	Restroom - South Side West End	Door Frame	Metal	White	I	0.02
148.	Restroom - East Side Center	Sink	Porcelain	White	I	0.10
149.	Restroom - West Side Center	Toilet	Porcelain	White	I	0.23
150.	**PCR L16 - Exterior**					
151.	North Side Center	Door	Metal	Blue	I	0.07
152.	North Side Center	Door Frame	Metal	Blue	I	0.00
153.	North Side Center	Wall	Wood	Tan	I	0.08
154.	North Side Center	Building Frame	Metal	Tan	I	0.00
155.	North Side Center	Overhang	Metal	Tan	I	0.30
156.	North Side Center	Overhang Lite	Metal	Blue	I	0.30
157.	North Side Center	Downspout	Metal	Tan	I	0.00
158.	North Side Center	Window Lite	Metal	Tan	I	0.00
159.	**PCR 739 (with PCR 736, 737, 738) - Interior (1989)**					
160.	North Side East End	Door	Metal	White	I	0.00
161.	North Side East End	Door Frame	Metal	Brown	I	0.00

Hazard Management Services
A Division of Forensic Analytical Consulting Services

SURVEY FOR LEAD BASED PAINT
Fresno Unified School District

A Division of FACS

Site Name:	Addams Elementary School								**Date:**	November 1, 2018
Address:	2117 W. McKinley Ave., Fresno, CA 93728								**HMS Job #:**	Pj39403
Start Time:	9:20	**Calibration:**	**1.04 =**	1.0	**1.04 =**	0.9	**1.04 =**	0.9	**Technician:**	Jacob Sharp - 28717
End Time:	12:20	**Calibration:**	**1.04 =**	0.9	**1.04 =**	1.0	**1.04 =**	0.8	**Inspector/Assessor:**	Joseph M Vuglia - 22314
Niton XLP 300 22263		**See Lead-Based Paint Inspections, Sampling Protocol, & Definition of Lead-Based Paint on Page 1**							**Condition Codes: I = Intact, F = Fair, P = Poor**	

No.	Sample Location	Component	Substrate	Color	Condition	XRF Result (mg/cm2)
162.	**PCR 739 (with PCR 736, 737, 738) - Exterior**					
163.	North Side East End	Wall	Wood	Tan	I	0.00
164.	North Side East End	Building Frame	Metal	Tan	I	0.00
165.	North Side East End	Door	Metal	Blue	I	0.00
166.	North Side East End	Door Frame	Metal	Blue	I	0.00
167.	North Side East End	Handrail	Metal	Blue	I	0.00
168.	North Side West End	Window Trim	Wood	Blue	I	0.01
169.	North Side East End	Overhang	Metal	Tan	I	0.02
170.	North Side East End	Gutter	Metal	Blue	I	0.00
171.	North Side East End	Downspout	Metal	Tan	I	0.00
172.	South Side Center	HVAC Unit	Metal	Tan	I	0.01
173.	**PCR 875 - Interior (1990)**					
174.	North Side West End	Door	Metal	White	I	0.00
175.	North Side West End	Door Frame	Metal	Brown	I	0.00
176.	**PCR 875 - Exterior**					
177.	North Side West End	Door	Metal	Blue	I	0.00
178.	North Side West End	Door Frame	Metal	Blue	I	0.00
179.	North Side West End	Wall	Wood	Tan	I	0.00

Hazard Management Services
A Division of Forensic Analytical Consulting Services

SURVEY FOR LEAD BASED PAINT
Fresno Unified School District

A Division of FACS

Site Name:	Addams Elementary School								**Date:**	November 1, 2018
Address:	2117 W. McKinley Ave., Fresno, CA 93728								**HMS Job #:**	Pj39403
Start Time:	9:20	**Calibration:**	**1.04 =**	1.0	**1.04 =**	0.9	**1.04 =**	0.9	**Technician:**	Jacob Sharp - 28717
End Time:	12:20	**Calibration:**	**1.04 =**	0.9	**1.04 =**	1.0	**1.04 =**	0.8	**Inspector/Assessor:**	Joseph M Vuglia - 22314
Niton XLP 300 22263		**See Lead-Based Paint Inspections, Sampling Protocol, & Definition of Lead-Based Paint on Page 1**							**Condition Codes: I = Intact, F = Fair, P = Poor**	

No.	Sample Location	Component	Substrate	Color	Condition	XRF Result (mg/cm2)
180.	**PCR 875 – Exterior (Continued)**					
181.	North Side West End	Building Frame	Metal	Tan	I	0.00
182.	North Side East End	Window Trim	Wood	Blue	I	0.00
183.	North Side West End	Handrail	Metal	Blue	I	0.00
184.	North Side West End	Gutter	Metal	Blue	I	0.00
185.	North Side West End	Downspout	Metal	Tan	I	0.00
186.	**PCR 375 - Interior (1986)**					
187.	North Side East End	Door	Metal	White	I	0.00
188.	North Side East End	Door Frame	Metal	Brown	I	0.00
189.	**PCR 375 - Exterior**					
190.	North Side East End	Door	Metal	Blue	I	0.00
191.	North Side East End	Door Frame	Metal	Blue	I	0.00
192.	North Side East End	Wall	Wood	Tan	I	0.00
193.	North Side East End	Building Frame	Metal	Tan	I	0.00
194.	North Side West End	Window Trim	Wood	Blue	I	0.00
195.	North Side East End	Handrail	Metal	Blue	I	0.00
196.	North Side East End	Gutter	Metal	Blue	I	0.00
197.	North Side East End	Downspout	Metal	Tan	I	0.00

Site Name:	Addams Elementary School								**Date:**	November 1, 2018
Address:	2117 W. McKinley Ave., Fresno, CA 93728								**HMS Job #:**	Pj39403
Start Time:	9:20	**Calibration:**	**1.04 =**	1.0	**1.04 =**	0.9	**1.04 =**	0.9	**Technician:**	Jacob Sharp - 28717
End Time:	12:20	**Calibration:**	**1.04 =**	0.9	**1.04 =**	1.0	**1.04 =**	0.8	**Inspector/Assessor:**	Joseph M Vuglia - 22314
Niton XLP 300 22263		**See Lead-Based Paint Inspections, Sampling Protocol, & Definition of Lead-Based Paint on Page 1**							**Condition Codes: I = Intact, F = Fair, P = Poor**	

No.	Sample Location	Component	Substrate	Color	Condition	XRF Result (mg/cm2)
198.	**PCR 375 – Exterior (Continued)**					
199.	South Side Center	HVAC Unit	Metal	Tan	I	0.01
200.	**PCR 560 - Interior (1987)**					
201.	North Side West End	Door	Metal	White	I	0.00
202.	North Side West End	Door Frame	Metal	Brown	I	0.00
203.	**PCR 560 - Exterior**					
204.	North Side West End	Door	Metal	Blue	I	0.00
205.	North Side West End	Door Frame	Metal	Blue	I	0.00
206.	North Side West End	Wall	Wood	Tan	I	0.00
207.	North Side West End	Building Frame	Metal	Tan	I	0.00
208.	North Side East End	Window Trim	Wood	Blue	I	0.00
209.	North Side West End	Gutter	Metal	Blue	I	0.00
210.	North Side West End	Downspout	Metal	Tan	I	0.00
211.	South Side Center	HVAC Unit	Metal	Tan	I	0.01
212.	**PCR 940 - Interior (1991)**					
213.	North Side West End	Door	Metal	White	I	0.00
214.	North Side West End	Door Frame	Metal	Brown	I	0.00

Hazard Management Services
A Division of Forensic Analytical Consulting Services

SURVEY FOR LEAD BASED PAINT
Fresno Unified School District

A Division of FACS

Site Name:	Addams Elementary School								**Date:**	November 1, 2018
Address:	2117 W. McKinley Ave., Fresno, CA 93728								**HMS Job #:**	Pj39403
Start Time:	9:20	**Calibration:**	**1.04 =**	1.0	**1.04 =**	0.9	**1.04 =**	0.9	**Technician:**	Jacob Sharp - 28717
End Time:	12:20	**Calibration:**	**1.04 =**	0.9	**1.04 =**	1.0	**1.04 =**	0.8	**Inspector/Assessor:**	Joseph M Vuglia - 22314
Niton XLP 300 22263		**See Lead-Based Paint Inspections, Sampling Protocol, & Definition of Lead-Based Paint on Page 1**							**Condition Codes: I = Intact, F = Fair, P = Poor**	

No.	Sample Location	Component	Substrate	Color	Condition	XRF Result (mg/cm2)
215.	**PCR 940 - Exterior**					
216.	North Side West End	Door	Metal	Blue	I	0.00
217.	North Side West End	Door Frame	Metal	Blue	I	0.00
218.	North Side West End	Wall	Wood	Tan	I	0.00
219.	North Side West End	Building Frame	Metal	Tan	I	0.00
220.	North Side East End	Window Trim	Wood	Blue	I	0.00
221.	North Side East End	Handrail	Metal	Blue	I	0.00
222.	North Side West End	Gutter	Metal	Blue	I	0.00
223.	North Side West End	Downspout	Metal	Tan	I	0.00
224.	South Side Center	HVAC Unit	Metal	Tan	I	0.01
225.	**PCR 1528 (Restrooms) - Interior (2007)**					
226.	East Side Center at Women's Restroom	Door	Metal	Green	I	0.00
227.	East Side Center at Women's Restroom	Door Frame	Metal	Green	I	0.00
228.	East Side Center at Women's Restroom	Wall	FRP	White	I	0.00
229.	West Side Center at Women's Restroom	Sink	Porcelain	White	I	0.00
230.	West Side Center at Women's Restroom	Toilet	Porcelain	White	I	0.00
231.	West Side Center at Women's Restroom	Partition	Plastic	Brown	I	0.00
232.						

Hazard Management Services
A Division of Forensic Analytical Consulting Services

SURVEY FOR LEAD BASED PAINT
Fresno Unified School District

A Division of FACS

Site Name:	Addams Elementary School								**Date:**	November 1, 2018
Address:	2117 W. McKinley Ave., Fresno, CA 93728								**HMS Job #:**	Pj39403
Start Time:	9:20	**Calibration:**	**1.04 =**	1.0	**1.04 =**	0.9	**1.04 =**	0.9	**Technician:**	Jacob Sharp - 28717
End Time:	12:20	**Calibration:**	**1.04 =**	0.9	**1.04 =**	1.0	**1.04 =**	0.8	**Inspector/Assessor:**	Joseph M Vuglia - 22314
Niton XLP 300 22263		**See Lead-Based Paint Inspections, Sampling Protocol, & Definition of Lead-Based Paint on Page 1**							**Condition Codes: I = Intact, F = Fair, P = Poor**	

No.	Sample Location	Component	Substrate	Color	Condition	XRF Result (mg/cm2)
233.	**PCR 1528 (Restrooms) - Exterior**					
234.	East Side Center at Women's Restroom	Door	Metal	Blue	I	0.00
235.	East Side Center at Women's Restroom	Door Frame	Metal	Blue	I	0.00
236.	East Side Center at Women's Restroom	Wall	Wood	Tan	I	0.00
237.	South Side West End	Door Trim	Wood	Blue	I	0.00
238.	North Side Center	Overhang	Metal	Tan	I	0.00
239.	North Side West End	Downspout	Metal	Tan	I	0.00
240.	North Side West End	Gutter	Metal	Blue	I	0.00
241.						

FACS

PAINT CHIP SAMPLE REQUEST FORM

Client:	**FR09 FACS Fresno** **FRESNO UNIFIED SCHOOL DISTRICT**	Sampled by: **Jacob Sharp** PM: **Joseph Vuglia** Date: **11/05/18**	
Contact:	**Joseph Vuglia** Phone: **(559) 436-0277**	Special Instructions:	E-mail results to E-mail results to jvuglia@forensicanalytical.com and dpyle@forensicanalytical.com
Site:	**FRESNO UNIFIED SCHOOL DISTRICT** **Addams Elementary School**	Turnaround Time:	1-Day / 2-Day / 3-Day **X** / 5-Day / Other / Due Date and Time: **Standard**
Client No.:	**C23033** **FACS Job #: PJ39403**	Analysis:	Flame AA (Pb)

Sample Number	Sample Location	Component	Color	Substrate	Condition
PJ39403-01pb	PCR 940: Exterior – north side east end	Handrail	Blue	Metal	Fair
PJ39403-02pb	PCR 560: Exterior – north side west end	Downspout	Tan	Metal	Intact
PJ39403-03pb	Classroom 34 (DSA57883): Exterior – south side west end	Wall	Tan	Wood	Fair
PJ39403-04pb	PCR 875: Exterior - south side east end	Window trim	Blue	Wood	Intact
PJ39403-05pb	Portable Restroom: Exterior – south side west end	Door trim	Blue	Wood	Fair
PJ39403-06pb	PCR 1178: Exterior – north side east end	Door	Blue	Metal	Intact
PJ39403-07pb	PCR 650: Exterior – south side west end	Door Frame	Blue	Metal	Intact
PJ39403-08pb	PCR 716: Exterior – south side east end	Downspout	Tan	Metal	Fair

Substrate: wood metal concrete plaster drywall brick

Shipped via: Fed Ex

Relinquished by:	*Date & Time:* 11/5/18 11:00	*Received by:*	*Date & Time:* Condition Acceptable ☐ Yes ☐ No
Relinquished by:	*Date & Time:*	*Received by:*	*Date & Time:* Condition Acceptable ☐ Yes ☐ No

RECEIVED NOV 07 2018

FACS

PAINT CHIP SAMPLE REQUEST FORM

Client:	**FR09 FACS Fresno** **FRESNO UNIFIED SCHOOL DISTRICT**	Sampled by: **Jacob Sharp** PM: **Joseph Vuglia** Date: **11/05/18**	
Contact:	**Joseph Vuglia** Phone: **(559) 436-0277**	Special Instructions:	E-mail results to E-mail results to jvuglia@forensicanalytical.com and dpyle@forensicanalytical.com
Site:	**FRESNO UNIFIED SCHOOL DISTRICT** **Addams Elementary School**	Turnaround Time:	1-Day / 2-Day / 3-Day **X** / 5-Day / Other / Due Date and Time: **Standard**
Client No.:	**C23033** **FACS Job #:** **PJ39403**	Analysis:	Flame AA (Pb)

Sample Number	Sample Location	Component	Color	Substrate	Condition
PJ39403-09pb	PCR 316: Exterior – north side west end	Wall	Tan	Wood	Intact
PJ39403-10pb	PCR 378: Exterior – north side east end	Wall	Tan	Wood	Fair
PJ39403-11pb	PCR 542 (TK1): Exterior – south side west end	Building Frame	Tan	Metal	Fair
PJ39403-12pb	Tk2 (DSA 27146): Exterior – south side center	Wall	Tan	Wood	Fair

Substrate: wood metal concrete plaster drywall brick

Shipped via: Fed Ex

Relinquished by:	*Date & Time:* 11/5/18 11:00	*Received by:*	*Date & Time:* Condition Acceptable ☐ Yes ☐ No
Relinquished by:	*Date & Time:*	*Received by:*	*Date & Time:* Condition Acceptable ☐ Yes ☐ No

RECEIVED NOV 07 2018

Forensic Analytical LABORATORIES

Final Report

Metals Analysis of Paints

(AIHA-LAP, LLC Accreditation, Lab ID #101762)

FACS - Fresno
Joseph Vuglia
21228 Cabot Blvd.

Hayward, CA 94545

Client ID: FR09
Report Number: M204643
Date Received: 11/07/18
Date Analyzed: 11/12/18
Date Printed: 11/12/18
First Reported: 11/12/18

Job ID / Site: PJ39403; FRESNO UNIFIED SCHOOL DISTRICT Addams Elementary School 2117 W. McKinley Ave Fresno CA 93728

FALI Job ID: FR09

Date(s) Collected: 11/5/18

Total Samples Submitted: 12
Total Samples Analyzed: 12

Sample Number	Lab Number	Analyte	Result	Result Units	Reporting Limit*	Method Reference
PJ39403-01PB	30818894	Pb	< 0.007	wt%	0.007	EPA 3050B/7000B
PJ39403-02PB	30818895	Pb	0.015	wt%	0.006	EPA 3050B/7000B
PJ39403-03PB	30818896	Pb	< 0.007	wt%	0.007	EPA 3050B/7000B
PJ39403-04PB	30818897	Pb	< 0.007	wt%	0.007	EPA 3050B/7000B
PJ39403-05PB	30818898	Pb	< 0.009	wt%	0.009	EPA 3050B/7000B
PJ39403-06PB	30818899	Pb	< 0.02	wt%	0.02	EPA 3050B/7000B
PJ39403-07PB	30818900	Pb	< 0.03	wt%	0.03	EPA 3050B/7000B
Comment:	Sample submission below 0.1 grams.					
PJ39403-08PB	30818901	Pb	< 0.007	wt%	0.007	EPA 3050B/7000B
PJ39403-09PB	30818902	Pb	< 0.008	wt%	0.008	EPA 3050B/7000B
PJ39403-10PB	30818903	Pb	< 0.007	wt%	0.007	EPA 3050B/7000B
PJ39403-11PB	30818904	Pb	< 0.006	wt%	0.006	EPA 3050B/7000B
PJ39403-12PB	30818905	Pb	< 0.007	wt%	0.007	EPA 3050B/7000B

* The Reporting Limit represents the lowest amount of analyte that the laboratory can confidently detect in the sample, and is not a regulatory level. The Units for the Reporting Limit are the same as the Units for the Final Results.

Daniele Siu

Daniele Siu, Laboratory Supervisor, Hayward Laboratory

3777 Depot Road, Suite 409, Hayward, CA 94545 / Telephone: (510) 887-8828 (800) 827-FASI / Fax: (510) 887-4218

LEAD HAZARD EVALUATION REPORT

Section 1 — Date of Lead Hazard Evaluation November 5, 2018

Section 2 — Type of Lead Hazard Evaluation (Check one box only)

☐ Lead Inspection ☐ Risk assessment ☐ Clearance Inspection ☑ Other (specify) Client Defined

Section 3 — Structure Where Lead Hazard Evaluation Was Conducted

Address [number, street, apartment (if applicable)]	City	County	Zip Code
Addams ES: 2117 W McKinley Ave	Fresno	Fresno	93728

Construction date (year) of structure	Type of structure	Children living in structure?
1948	☐ Multi-unit building ☑ School or daycare ☐ Single family dwelling ☐ Other_____	☐ Yes ☑ No ☐ Don't Know

Section 4 — Owner of Structure (if business/agency, list contact person)

Name	Telephone number
Fresno Unified School District - ATTN Cecilia Castillo	559-457-6117

Address [number, street, apartment (if applicable)]	City	State	Zip Code
4600 N Brawley Ave	Fresno	CA	93722

Section 5 — Results of Lead Hazard Evaluation (check all that apply)

☐ No lead-based paint detected ☑ Intact lead-based paint detected ☐ Deteriorated lead-based paint detected

☑ No lead hazards detected ☐ Lead-contaminated dust found ☐ Lead-contaminated soil found ☐ Other_____

Section 6 — Individual Conducting Lead Hazard Evaluation

Name	Telephone number
Joseph M Vuglia	559-436-0277

Address [number, street, apartment (if applicable)]	City	State	Zip Code
371 E Bullard Ave Ste 109	Fresno	CA	93710

CDPH certification number	Signature	Date
22314	Joseph M Vuglia	11-16-18

Name and CDPH certification number of any other individuals conducting sampling or testing (if applicable)

Fred Tarazon - Sample Tech 27399, Jacob Sharp - Sample Tech 28717

Section 7 — Attachments

A. A foundation diagram or sketch of the structure indicating the specifc locations of each lead hazard or presence of lead-based paint;
B. Each testing method, device, and sampling procedure used;
C. All data collected, including quality control data, laboratory results, including laboratory name, address, and phone number.

First copy and attachments retained by inspector

Second copy and attachments retained by owner

Third copy only (no attachments) mailed or faxed to:

California Department of Public Health
Childhood Lead Poisoning Prevention Branch Reports
850 Marina Bay Parkway, Building P, Third Floor
Richmond, CA 94804-6403
Fax: (510) 620-5656

Appendix C

Sample Location Drawing

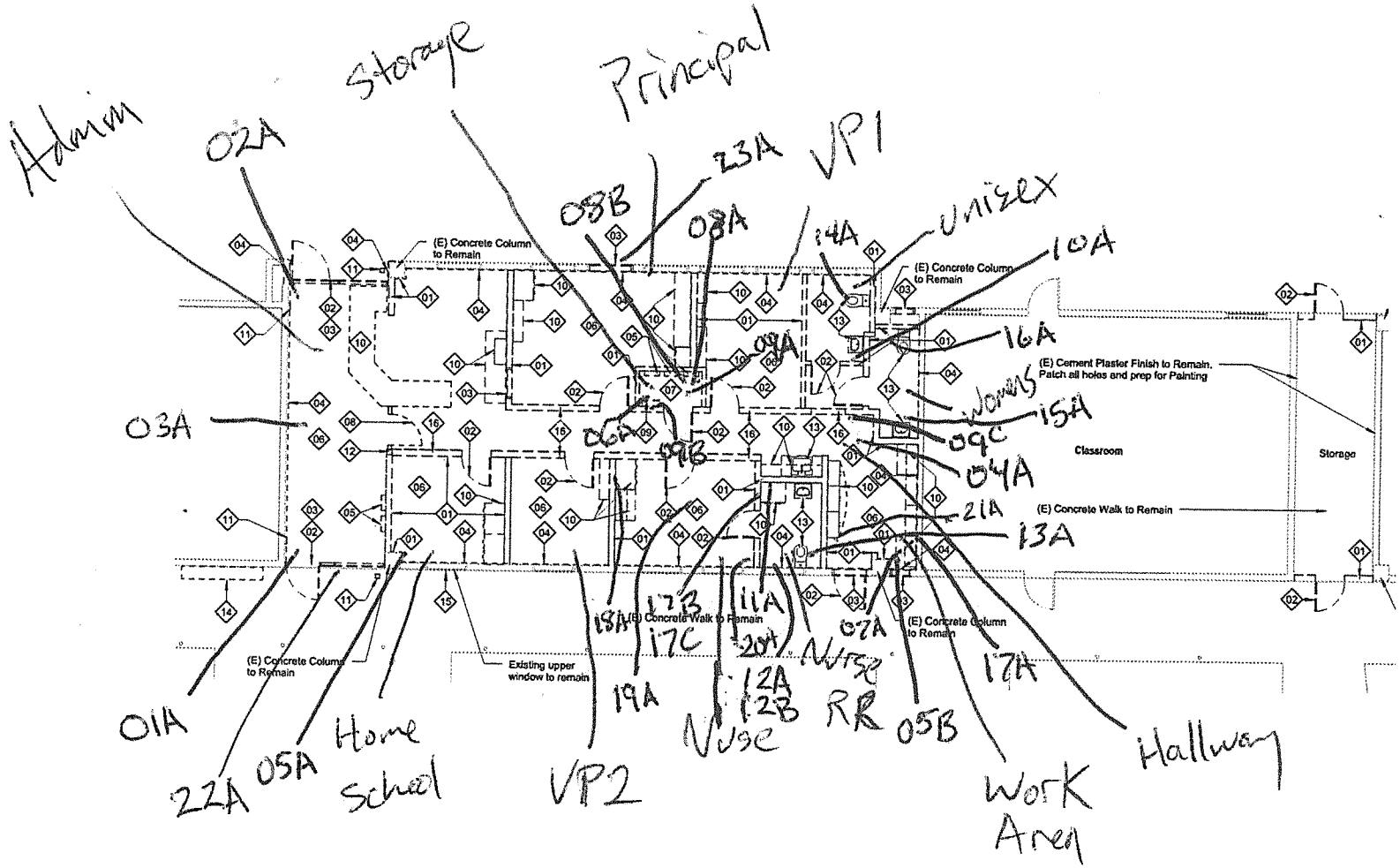
Admin
02A
Storage
Principal
23A
VP1
08B
08A
14A
Unisex
10A
(E) Concrete Column to Remain
(E) Concrete Column to Remain
16A
09A
(E) Cement Plaster Finish to Remain. Patch all holes and prep for Painting
Windows
15A
03A
06A
19B
09C
04A
Classroom
Storage
21A
(E) Concrete Walk to Remain
13A
12B
11A
18A
(E) Concrete Walk to Remain
17C
20A
07A
(E) Concrete Column to Remain
17A
(E) Concrete Column to Remain
Existing upper window to remain
19A
12A
12B
Nurse
RR
05B
01A
22A
05A
Home School
VP2
Nurse
Work Area
Hallway

Fresno Unified School District

ADDAMS ELEMENTARY SCHOOL

2117 W. MCKINLEY

FRESNO, CALIFORNIA 93728

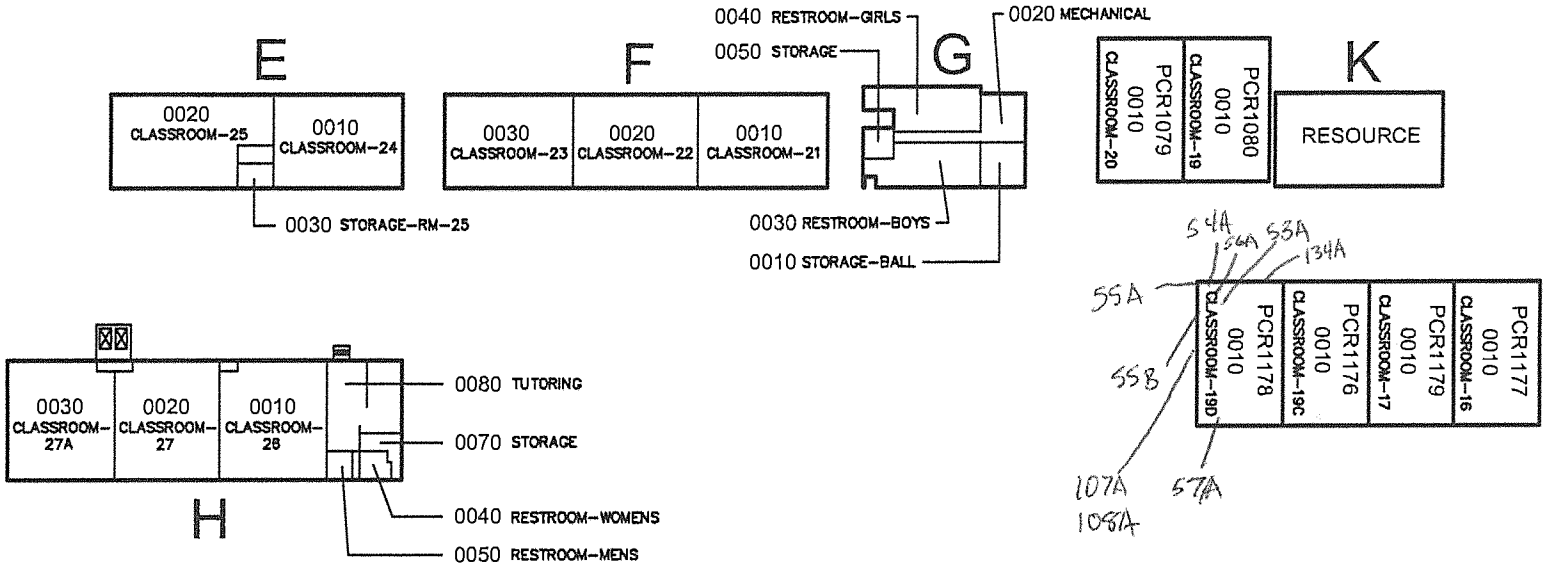

NORTH

KEY FOR BUILDINGS E, F, G, H & K

ROOM IDENTIFICATION

LEGEND

A — BUILDING CODE

ROOM CODE — 0030

DESCRIPTION — RESTROOM-BOYS

PAGE 3 OF 5

REVISION DATE: 02-20-07

PROPERTY # 005

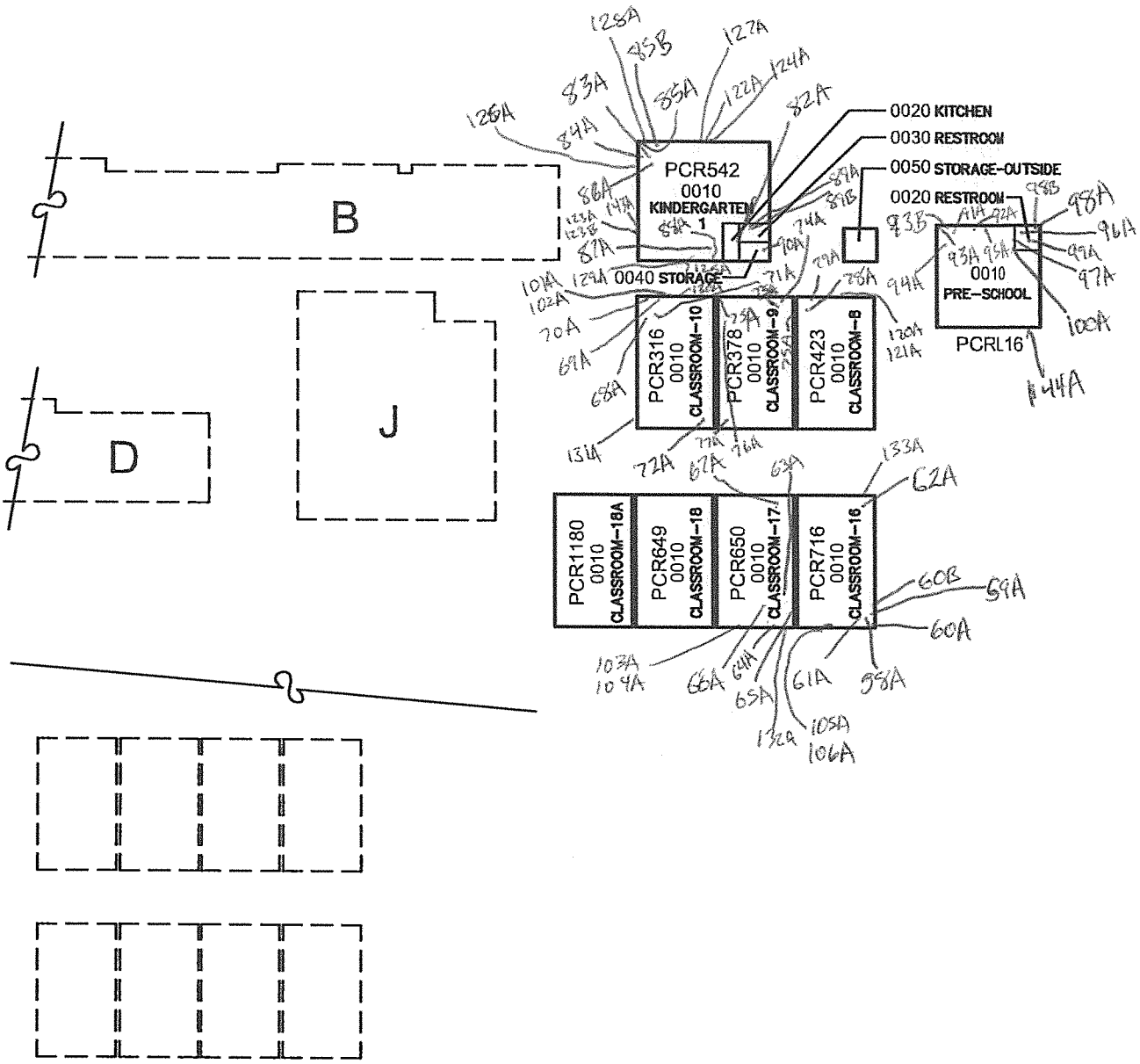

NORTH

KEY FOR PORTABLES

ROOM IDENTIFICATION

LEGEND

A — BUILDING CODE

ROOM CODE — 0030

DESCRIPTION — RESTROOM--BOYS

Fresno Unified School District	ADDAMS ELEMENTARY SCHOOL	PAGE 4 OF 5
	2117 W. MCKINLEY	REVISION DATE 08-20-07
	FRESNO, CALIFORNIA 93728	PROPERTY # 005

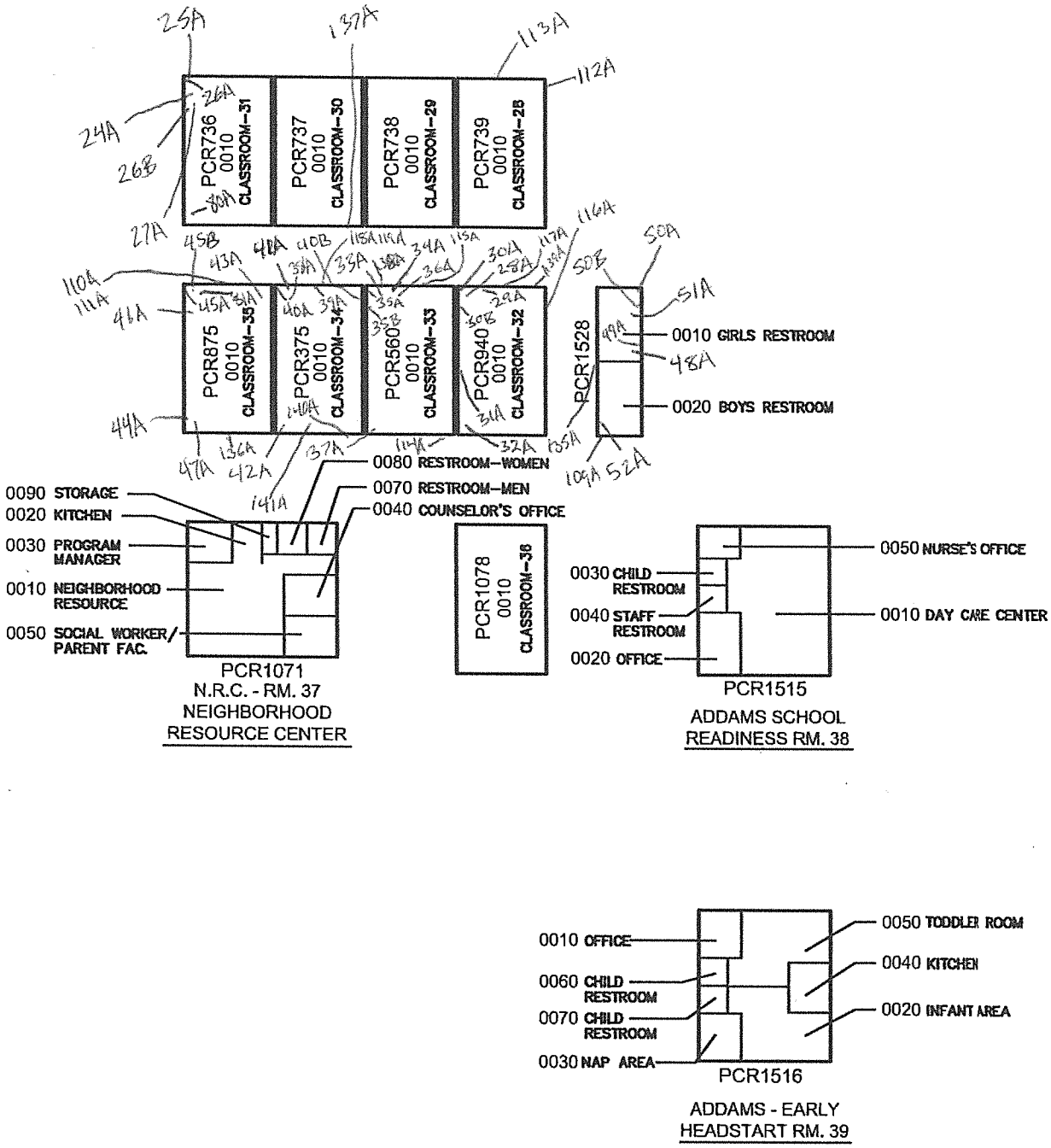

NORTH

KEY FOR PORTABLES

ROOM IDENTIFICATION

LEGEND

BUILDING CODE — A

ROOM CODE — 0030

DESCRIPTION — RESTROOM-BOYS

Fresno Unified School District

ADDAMS ELEMENTARY SCHOOL	PAGE 5 OF 1
2117 W. MCKINLEY	REVISION DATE: 06-28-07
FRESNO, CALIFORNIA 93728	PROPERTY # 035

Appendix D

Certifications of Personnel and Laboratories

Hazard Management Services, Inc.

This is to confirm that

Fred Tarazon

Has attended the four-hour

AHERA Refresher Course for Asbestos Inspectors

And has completed the requisite training and passed the exam for asbestos accreditation under TSCA Title II

September 11, 2018

Certificate Number: HMSBIR473

Valid Until: September 11, 2019

Cal/OSHA Approval Number: CA-025-06

HMS

Michael C. Sharp - AHERA Training Director
Hazard Management Services, Inc.
207 McHenry Ave. Modesto, CA 95354
(209) 551-2000

STATE OF CALIFORNIA
Edmund G. Brown, Jr. *Governor*

DEPARTMENT OF INDUSTRIAL RELATIONS
Division of Occupational Safety and Health
Asbestos Unit
2424 Arden Way, Suite 495
Sacramento, CA 95825-2417
(916) 574-2993 Office (916) 483-0572 Fax
http://www.dir.ca.gov/dirdatabases.html actu@dir.ca.gov

607225738T 413

Hazard Management Services, Inc.
Fadrique Tarazon
371 E. Bullard Ave., #109
Fresno CA 93710

July 09, 2018

Dear Certified Asbestos Consultant or Technician:

Enclosed is your certification card. **To maintain your certification, you must abide by the rules printed on the back of the certification card.**

Your certification is valid for a period of one year. If you wish to renew your certification, you must apply for renewal at least 60 days before the expiration date shown on your card. [8 CCR 341.15(h)(1)].

Please hold and do not send copies of your required AHERA refresher renewal certificates to our office until you apply for renewal of your certification.

Certificates must be kept current if you are actively working as a CAC or CSST. The grace period is only for those who are not actively working as an asbestos consultant or site surveillance technician.

Please contact our office at the above address, fax number or email; of any changes in your contact/mailing information within 15 days of the change.

Sincerely,

Jeff Ferrell
Senior Safety Engineer

Attachment: Certification Card

cc: File


State of California
Division of Occupational Safety and Health
Certified Site Surveillance Technician
Fadrique Tarazon
Name
Certification No. 16-5738
Expires on 08/17/19
This certification was issued by the Division of Occupational Safety and Health as authorized by Sections 7180 et seq. of the Business and Professions Code.


State of California Department of Public Health
Lead-Related Construction Certificate
Certificate Type
Expiration Date
Sampling Technician
12/23/2018
Fadrique Tarazon
ID #: 27399

Hazard Management Services, Inc.

This is to confirm that

Jacob Sharp

Has attended the four-hour

AHERA Refresher Course for Asbestos Inspectors

And has completed the requisite training and passed the exam for asbestos accreditation under TSCA Title II

September 11, 2018

Certificate Number: HMSBIR471

Valid Until: September 11, 2019

Cal/OSHA Approval Number: CA-025-06

HMS

Michael C. Sharp - AHERA Training Director
Hazard Management Services, Inc.
207 McHenry Ave. Modesto, CA 95354
(209) 551-2000

STATE OF CALIFORNIA

Edmund G. Brown, Jr. *Governor*

DEPARTMENT OF INDUSTRIAL RELATIONS
Division of Occupational Safety and Health
Asbestos Unit
2424 Arden Way, Suite 495
Sacramento, CA 95825-2417
(916) 574-2993 Office (916) 483-0572 Fax
http://www.dir.ca.gov/dirdatabases.html actu@dir.ca.gov

611025815T 416

Hazard Management Services, Inc.
Jacob M Sharp
207 McHenry Ave
Modesto CA 95354

September 11, 2018

Dear Certified Asbestos Consultant or Technician:

Enclosed is your certification card. **To maintain your certification, you must abide by the rules printed on the back of the certification card.**

Your certification is valid for a period of one year. If you wish to renew your certification, you must apply for renewal at least 60 days before the expiration date shown on your card. [8 CCR 341.15(h)(1)].

Please hold and do not send copies of your required AHERA refresher renewal certificates to our office until you apply for renewal of your certification.

Certificates must be kept current if you are actively working as a CAC or CSST. The grace period is only for those who are not actively working as an asbestos consultant or site surveillance technician.

Please contact our office at the above address, fax number or email; of any changes in your contact/mailing information within 15 days of the change.

Sincerely,

Jeff Ferrell
Senior Safety Engineer

Attachment: Certification Card

cc: File


State of California Department of Public Health
Lead-Related Construction Certificate
Certificate Type
Expiration Date
Sampling Technician
03/04/2019
Jacob M. Sharp
ID #: 28717

Hazard Management Services, Inc.

This is to confirm that

Joe Vuglia

Has attended the four-hour

AHERA Refresher Course for Asbestos Inspectors

And has completed the requisite training and passed the exam for asbestos accreditation under TSCA Title II

September 11, 2018

Certificate Number: HMSBIR474

Valid Until: September 11, 2019

Cal/OSHA Approval Number: CA-025-06

HMS

Michael C. Sharp - AHERA Training Director
Hazard Management Services, Inc.
207 McHenry Ave. Modesto, CA 95354
(209) 551-2000

STATE OF CALIFORNIA Edmund G. Brown, Jr. *Governor*

DEPARTMENT OF INDUSTRIAL RELATIONS
Division of Occupational Safety and Health
Asbestos Unit
2424 Arden Way, Suite 495
Sacramento, CA 95825-2417
(916) 574-2993 Office (916) 483-0572 Fax
http://www.dir.ca.gov/dirdatabases.html actu@dir.ca.gov

302255005C **372**

Hazard Management Services Inc.
Joseph M Vuglia
371 E. Bullard Ave. #109
Fresno CA 93710

January 19, 2018

Dear Certified Asbestos Consultant or Technician:

Enclosed is your certification card. **To maintain your certification, you must abide by the rules printed on the back of the certification card.**

Your certification is valid for a period of one year. If you wish to renew your certification, you must apply for renewal at least 60 days before the expiration date shown on your card. [8 CCR 341.15(h)(1)].

Please hold and do not send copies of your required AHERA refresher renewal certificates to our office until you apply for renewal of your certification.

Certificates must be kept current if you are actively working as a CAC or CSST. The grace period is only for those who are not actively working as an asbestos consultant or site surveillance technician.

Please contact our office at the above address, fax number or email; of any changes in your contact/mailing information within 15 days of the change.

Sincerely,

Jeff Ferrell
Senior Safety Engineer

Attachment: Certification Card

cc: File

Renewal – Card Attached (Revised 10/24/2012)

State of California Department of Public Health

Lead-Related Construction Certificate

Certificate Type	Expiration Date
Inspector/Assessor	08/10/2019
Project Monitor	08/10/2019

Joseph M. Vuglia

ID #: 22314

National Voluntary Laboratory Accreditation Program

SCOPE OF ACCREDITATION TO ISO/IEC 17025:2005

Forensic Analytical Laboratories, Inc.
3777 Depot Road, Suite 409
Hayward, CA 94545-2761
Mr. Steven Takahashi
Phone: 310-294-4365 Fax: 310-764-1136
Email: stakahashi@falaboratories.com
http://www.falaboratories.com

ASBESTOS FIBER ANALYSIS — NVLAP LAB CODE 101459-0

Bulk Asbestos Analysis

Code	*Description*
18/A01	EPA -- Appendix E to Subpart E of Part 763 -- Interim Method of the Determination of Asbestos in Bulk Insulation Samples
18/A03	EPA 600/R-93/116: Method for the Determination of Asbestos in Bulk Building Materials

Airborne Asbestos Analysis

Code	*Description*
18/A02	U.S. EPA's "Interim Transmission Electron Microscopy Analytical Methods-Mandatory and Nonmandatory-and Mandatory Section to Determine Completion of Response Actions" as found in 40 CFR, Part 763, Subpart E, Appendix A.

For the National Voluntary Laboratory Accreditation Program

United States Department of Commerce
National Institute of Standards and Technology

NVLAP®

Certificate of Accreditation to ISO/IEC 17025:2005

NVLAP LAB CODE: 101459-0

Forensic Analytical Laboratories, Inc.

Hayward, CA

is accredited by the National Voluntary Laboratory Accreditation Program for specific services, listed on the Scope of Accreditation, for:

Asbestos Fiber Analysis

This laboratory is accredited in accordance with the recognized International Standard ISO/IEC 17025:2005. This accreditation demonstrates technical competence for a defined scope and the operation of a laboratory quality management system (refer to joint ISO-ILAC-IAF Communique dated January 2009).

2017-07-01 through 2018-06-30

Effective Dates

DEPARTMENT OF COMMERCE ★ UNITED STATES OF AMERICA ★

For the National Voluntary Laboratory Accreditation Program

October 31, 2016

Laboratory ID: 101762

Steve Takahashi
Forensic Analytical Laboratories, Inc.
3777 Depot Road, Suite 409
Hayward, CA 94545

Dear Mr. Takahashi:

Congratulations! The AIHA Laboratory Accreditation Programs (AIHA-LAP), LLC's Analytical Accreditation Board (AAB) has approved Forensic Analytical Laboratories, Inc. as an accredited Industrial Hygiene, Environmental Lead, Environmental Microbiology and Unique Scopes laboratory.

Accreditation documentation includes the IHLAP, ELLAP, EMLAP and Unique Scope accreditation certificate, scope of accreditation document and a copy of the current AIHA-LAP, LLC license agreement (if your completed agreement is not on file at AIHA-LAP, LLC). The accreditation symbol has been designed for use by all AIHA-LAP, LLC accredited laboratories. If your laboratory chooses to use the symbol in its advertising the laboratory's accreditation, you must complete and return the AIHA-LAP, LLC license agreement to a Laboratory Accreditation Specialist. Once submitted, an electronic copy of the accreditation symbol will be sent to you. Please inform us if your laboratory does not wish to use the symbol in advertising.

Laboratory accreditation shall be maintained by continued compliance with IHLAP, ELLAP, EMLAP and Unique Scope requirements *(see Policy Modules 2B, 2C, 2D, 2E and 6)*, which includes proficient participation in AIHA-LAP, LLC approved proficiency testing, demonstration of competency, or round robin program as indicated on the AIHA-LAP "Approved PT and Round Robin" webpage, its associated Scope/PT table, and as required in Policy Module 6, for all Fields of Testing (FoTs) for which the laboratory is accredited. An accredited laboratory that wishes to expand into a new FoT must submit an updated accreditation application to AIHA-LAP, LLC for review by the AAB.

Any changes in ownership, laboratory location, personnel, FoTs/Methods, or significant procedural changes shall be reported to AIHA-LAP, LLC in writing within twenty (20) business days of the change.

The accreditation certificate is the property of AIHA-LAP, LLC and must be returned to us should your laboratory withdraw or be removed from the IHLAP, ELLAP, EMLAP and Unique Scope.

Again, congratulations. If you have any questions, please contact Lauren Schnack, Senior Specialist, Quality and Accreditation, at (703) 846-0716.

Sincerely,

Cheryl O. Morton

Cheryl O. Morton
Managing Director
AIHA Laboratory Accreditation Programs, LLC

AIHA Laboratory Accreditation Programs, LLC

acknowledges that

Forensic Analytical Laboratories, Inc.

3777 Depot Road, Suite 409, Hayward, CA 94545

Laboratory ID: 101762

along with all premises from which key activities are performed, as listed above, has fulfilled the requirements of the AIHA Laboratory Accreditation Programs (AIHA-LAP), LLC accreditation to the ISO/IEC 17025:2005 international standard, *General Requirements for the Competence of Testing and Calibration Laboratories* in the following:

LABORATORY ACCREDITATION PROGRAMS

✓	**INDUSTRIAL HYGIENE**	Accreditation Expires: October 01, 2018
✓	**ENVIRONMENTAL LEAD**	Accreditation Expires: October 01, 2018
✓	**ENVIRONMENTAL MICROBIOLOGY**	Accreditation Expires: October 01, 2018
☐	**FOOD**	Accreditation Expires:
✓	**UNIQUE SCOPES**	Accreditation Expires: October 01, 2018

Specific Field(s) of Testing (FoT)/Method(s) within each Accreditation Program for which the above named laboratory maintains accreditation is outlined on the attached **Scope of Accreditation**. Continued accreditation is contingent upon successful on-going compliance with ISO/IEC 17025:2005 and AIHA-LAP, LLC requirements. This certificate is not valid without the attached **Scope of Accreditation**. Please review the AIHA-LAP, LLC website (www.aihaaccreditedlabs.org) for the most current Scope.

William Walsh, CIH
Chairperson, Analytical Accreditation Board

Cheryl O. Morton
Managing Director, AIHA Laboratory Accreditation Programs, LLC

Revision 15: 03/30/2016

Date Issued: 10/31/2016

AIHA Laboratory Accreditation Programs, LLC

SCOPE OF ACCREDITATION

Forensic Analytical Laboratories, Inc.
3777 Depot Road, Suite 409, Hayward, CA 94545

Laboratory ID: **101762**
Issue Date: 10/31/2016

The laboratory is approved for those specific field(s) of testing/methods listed in the table below. Clients are urged to verify the laboratory's current accreditation status for the particular field(s) of testing/Methods, since these can change due to proficiency status, suspension and/or withdrawal of accreditation.

Industrial Hygiene Laboratory Accreditation Program (IHLAP)

Initial Accreditation Date: 03/01/1990

IHLAP Scope Category	**Field of Testing (FoT)** (FoTs cover all relevant IH matrices)	**Technology sub-type/ Detector**	**Published Reference Method/Title of In-house Method**	**Method Description or Analyte** *(for internal methods only)*
Chromatography Core	Ion Chromatography (IC)		NIOSH 7903	
			OSHA ID 215	
Spectrometry Core	Atomic Absorption	CVAA	NIOSH 6009	
			OSHA ID-140	
			OSHA ID-145	
		FAA	NIOSH 7082	
			OSHA ID-121	
		GFAA	NIOSH 7105	
	Inductively-Coupled Plasma	ICP/AES	NIOSH 7303	
			OSHA ID 125G (Modified)	
	UV/VIS (Colorimetric)		NIOSH 7600	
	Infrared		ASTM D7948	
			NIOSH 7603	
Asbestos/Fiber Microscopy Core	Polarized Light Microscopy (PLM)		EPA/600/M4-82-020, 1982	
			EPA/600/R-93/116, July 1993	
	Phase Contrast Microscopy (PCM)		NIOSH 7400	E-700
	Transmission Electron Microscopy (TEM)		EPA 600/R-93/116	SOP TEM 301
			EPA 600/R-93/116	SOP TEM 300
			EPA 600/R-93/116	SOP TEM 302
			EPA 600/R-93/116	SOP TEM 303
			EPA AHERA - 40 CFR Part 763	EPA AHERA Method (40 CFR 763, Subpart E, Appendix A, Mandatory Method

IHLAP Scope Category	Field of Testing (FoT) (FoTs cover all relevant IH matrices)	Technology sub-type/ Detector	Published Reference Method/Title of In-house Method	Method Description or Analyte *(for internal methods only)*
Asbestos/Fiber Microscopy Core	Transmission Electron Microscopy (TEM)		NIOSH 7402	
			Yamate Level 1	
			Yamate Level 2	
Miscellaneous Core	Gravimetric		NIOSH 0500 (Modified)	
			NIOSH 0600 (Modified)	

A complete listing of currently accredited Industrial Hygiene laboratories is available on the AIHA-LAP, LLC website at: http://www.aihaaccreditedlabs.org

CALIFORNIA
Water Boards
STATE WATER RESOURCES CONTROL BOARD
REGIONAL WATER QUALITY CONTROL BOARDS

CALIFORNIA STATE

ENVIRONMENTAL LABORATORY ACCREDITATION PROGRAM

CERTIFICATE OF ENVIRONMENTAL ACCREDITATION

Is hereby granted to

Forensic Analytical Laboratories, Inc.

Hayward Laboratory

3777 Depot Road, Suite 409

Hayward, CA 94545

Scope of the certificate is limited to the
"Fields of Testing"
which accompany this Certificate.

Continued accredited status depends on successful completion of on-site inspection, proficiency testing studies, and payment of applicable fees.

This Certificate is granted in accordance with provisions of
Section 100825, et seq. of the Health and Safety Code.

Certificate No.: **1202**

Expiration Date: **5/31/2019**

Effective Date: **6/1/2017**

Sacramento, California
subject to forfeiture or revocation

Christine Sotelo, Chief
Environmental Laboratory Accreditation Program

CALIFORNIA STATE
ENVIRONMENTAL LABORATORY ACCREDITATION PROGRAM
Accredited Fields of Testing

Forensic Analytical Laboratories, Inc.
Hayward Laboratory
3777 Depot Road, Suite 409
Hayward, CA 94545
Phone: (510) 887-8828

Certificate No. **1202**
Expiration Date **5/31/2019**

Field of Testing: 101 - Microbiology of Drinking Water

101.050	001	Total Coliform P/A	SM9223B (Colilert)
101.050	002	E. coli P/A	SM9223B (Colilert)

Field of Testing: 103 - Toxic Chemical Elements of Drinking Water

103.040	010	Lead	SM3113B
103.130	001	Aluminum	EPA 200.7
103.130	003	Barium	EPA 200.7
103.130	004	Beryllium	EPA 200.7
103.130	005	Cadmium	EPA 200.7
103.130	007	Chromium	EPA 200.7
103.130	008	Copper	EPA 200.7
103.130	009	Iron	EPA 200.7
103.130	011	Manganese	EPA 200.7
103.130	012	Nickel	EPA 200.7
103.130	015	Silver	EPA 200.7
103.130	017	Zinc	EPA 200.7
103.160	001	Mercury	EPA 245.1
103.300	001	Asbestos	EPA 100.1
103.301	001	Asbestos	EPA 100.2

Field of Testing: 107 - Microbiology of Wastewater

107.242	001	Enterococci	Enterolert
107.245	001	E. coli (Enumeration)	SM9223B (Colilert 18)

Field of Testing: 109 - Toxic Chemical Elements of Wastewater

109.010	001	Aluminum	EPA 200.7
109.010	002	Antimony	EPA 200.7
109.010	003	Arsenic	EPA 200.7
109.010	004	Barium	EPA 200.7
109.010	005	Beryllium	EPA 200.7
109.010	007	Cadmium	EPA 200.7
109.010	009	Chromium	EPA 200.7
109.010	010	Cobalt	EPA 200.7
109.010	011	Copper	EPA 200.7
109.010	012	Iron	EPA 200.7
109.010	013	Lead	EPA 200.7
109.010	015	Manganese	EPA 200.7
109.010	016	Molybdenum	EPA 200.7
109.010	017	Nickel	EPA 200.7
109.010	019	Selenium	EPA 200.7

As of 11/27/2017 , this list supersedes all previous lists for this certificate number.
Customers: Please verify the current accreditation standing with the State.

109.010	021	Silver	EPA 200.7
109.010	024	Tin	EPA 200.7
109.010	026	Vanadium	EPA 200.7
109.010	027	Zinc	EPA 200.7
109.190	001	Mercury	EPA 245.1
109.370	010	Lead	SM3111B-1999

Field of Testing: 114 - Inorganic Chemistry of Hazardous Waste

114.010	001	Antimony	EPA 6010B
114.010	002	Arsenic	EPA 6010B
114.010	003	Barium	EPA 6010B
114.010	004	Beryllium	EPA 6010B
114.010	005	Cadmium	EPA 6010B
114.010	006	Chromium	EPA 6010B
114.010	007	Cobalt	EPA 6010B
114.010	008	Copper	EPA 6010B
114.010	009	Lead	EPA 6010B
114.010	010	Molybdenum	EPA 6010B
114.010	011	Nickel	EPA 6010B
114.010	012	Selenium	EPA 6010B
114.010	013	Silver	EPA 6010B
114.010	014	Thallium	EPA 6010B
114.010	015	Vanadium	EPA 6010B
114.010	016	Zinc	EPA 6010B
114.130	001	Lead	EPA 7420
114.141	001	Mercury	EPA 7471A
114.240	001	Corrosivity - pH Determination	EPA 9040B
114.241	001	Corrosivity - pH Determination	EPA 9045C

Field of Testing: 115 - Extraction Test of Hazardous Waste

115.021	001	TCLP Inorganics	EPA 1311
115.030	001	Waste Extraction Test (WET)	CCR Chapter11, Article 5, Appendix II

Field of Testing: 121 - Bulk Asbestos Analysis of Hazardous Waste

121.010	001	Bulk Asbestos	EPA 600/M4-82-020

Field of Testing: 126 - Microbiology of Recreational Water

126.050	001	Total Coliform (Enumeration)	SM9223B (Colilert/Quanti-Tray)
126.080	001	Enterococci	Enterolert

AIHA Laboratory Accreditation Programs, LLC

SCOPE OF ACCREDITATION

Forensic Analytical Laboratories, Inc.
3777 Depot Road, Suite 409, Hayward, CA 94545

Laboratory ID: **101762**
Issue Date: 10/31/2016

The laboratory is approved for those specific field(s) of testing/methods listed in the table below. Clients are urged to verify the laboratory's current accreditation status for the particular field(s) of testing/Methods, since these can change due to proficiency status, suspension and/or withdrawal of accreditation.

The EPA recognizes the AIHA-LAP, LLC ELLAP program as meeting the requirements of the National Lead Laboratory Accreditation Program (NLLAP) established under Title X of the Residential Lead-Based Paint Hazard Reduction Act of 1992 and includes paint, soil and dust wipe analysis. Air and composited wipes analyses are not included as part of the NLLAP.

Environmental Lead Laboratory Accreditation Program (ELLAP)

Initial Accreditation Date: 06/26/1995

Field of Testing (FoT)	Technology sub-type/ Detector	Method	Method Description (*for internal methods only*)
Paint		EPA SW-846 3050B	
		EPA SW-846 7000B	
Soil		EPA SW-846 3050B	
		EPA SW-846 7000B	
Settled Dust by Wipe		NIOSH 7082	
		NIOSH 9100	
		OSHA ID-105 Modified	
Airborne Dust		NIOSH 7082	
		NIOSH 7105	
		NIOSH 7303	

A complete listing of currently accredited Environmental Lead laboratories is available on the AIHA-LAP, LLC website at: http://www.aihaaccreditedlabs.org

AIHA Laboratory Accreditation Programs, LLC

SCOPE OF ACCREDITATION

Forensic Analytical Laboratories, Inc.
3777 Depot Road, Suite 409, Hayward, CA 94545

Laboratory ID: **101762**
Issue Date: 10/31/2016

The laboratory is approved for those specific field(s) of testing/methods listed in the table below. Clients are urged to verify the laboratory's current accreditation status for the particular field(s) of testing/Methods, since these can change due to proficiency status, suspension and/or withdrawal of accreditation.

Environmental Microbiology Laboratory Accreditation Program (EMLAP)

Initial Accreditation Date: 11/01/2003

EMLAP Category	Field of Testing (FoT)	Method	Method Description (*for internal methods only*)
Fungal	Air - Culturable	SOP IAQ 100	Analysis of Viable Air Samples for Identification of Fungal Mycota
	Bulk - Culturable	SOP IAQ 103	Analysis of Viable Bulk Samples for Identification of Fungal Mycota
	Surface - Culturable	SOP IAQ 103	Analysis of Viable Bulk Samples for Identification of Fungal Mycota
	Air - Direct Examination	SOP IAQ 101	Analysis of Non-Viable Air Samples for Identification of Fungal Mycota
	Bulk - Direct Examination	SOP IAQ 102	Analysis of Non-Viable Bulk Samples for Identification of Fungal Mycota
	Surface - Direct Examination	SOP IAQ 102	Analysis of Non-Viable Bulk Samples for Identification of Fungal Mycota
Bacterial	Legionella	SOP IAQ 214	Recovery of Legionellae from Swab Samples

A complete listing of currently accredited Environmental Microbiology laboratories is available on the AIHA-LAP, LLC website at: http://www.aihaaccreditedlabs.org

AIHA Laboratory Accreditation Programs, LLC

SCOPE OF ACCREDITATION

Forensic Analytical Laboratories, Inc.
3777 Depot Road, Suite 409, Hayward, CA 94545

Laboratory ID: **101762**
Issue Date: 10/31/2016

The laboratory is approved for those specific field(s) of testing/methods listed in the table below. Clients are urged to verify the laboratory's current accreditation status for the particular field(s) of testing/Methods, since these can change due to proficiency status, suspension and/or withdrawal of accreditation.

Unique Scopes Laboratory Accreditation Program (Unique Scopes)

Initial Accreditation Date: 05/01/2014

Unique Scope Category	Field of Testing (FoT)	Method	Method Description *(for internal methods only)*
Consumer Product Testing	Lead in Paint and Other Similar Surface Coatings	16 C.F.R 1303 CPSC-CH-E1001.08.1	MET 214
		16 C.F.R 1303 CPSC-CH-E1002.08.1	MET 215
		16 C.F.R 1303 CPSC-CH-E1003-09	MET 213

A complete listing of currently accredited Unique Scope laboratories is available on the AIHA-LAP, LLC website at: http://www.aihaaccreditedlabs.org

Right People

Right Perspective

Right Now

www.forensicanalytical.com