KERN HIGH SCHOOL DISTRICT

Business Services Department
Richard J. Ruiz, Director

5801 Sundale Avenue
Bakersfield, California 93309-2924
(661) 827-3122
FAX (661) 827-3309

ADDENDUM NO. ONE

DATE: May 24, 2023

BID TITLE: **Bid No. 5571 – Highland High School: 50-Meter Pool and Aquatics Center**

BID DATE: ~~Wednesday, May 31, at 2:00 p.m.~~ **Friday, June 2, 2023, at 2:00 p.m.**

Notice to all contractors submitting bids for the above-referenced item:

1. **GENERAL INFORMATION / CLARIFICATIONS**
   Please see attached information provided by the Architect.

2. **All other terms, conditions and specifications are to remain the same.**

Approved:

Jenny Hannah Brown
Director, Facilities Planning

Michael Zulfa, Ed.D.,
Associate Superintendent, Business

Please sign below and **return this page with bid** to acknowledge receipt of this addendum.

Signature

Company Name

Print

Date

Title

addendum

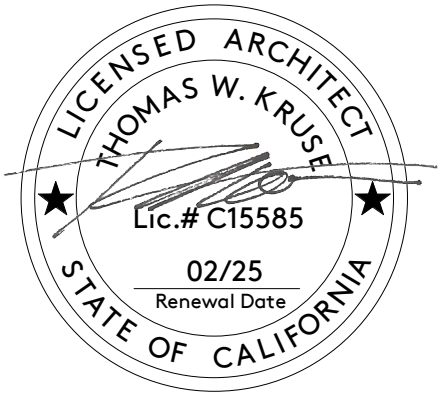

ADDENDUM NO: 01

DATE: May 24, 2023
PROJECT No.: KHSD 2201
DSA No.: A 03-122664, FILE 15-H3

DISTRICT: KERN HIGH SCHOOL DISTRICT
PROJECT: HIGHLAND HIGH SCHOOL – 50M POOL & AQUATICS CENTER
PROJECT ADDRESS: 2900 ROYAL SCOTS WAY, BAKERSFIELD, CA 93306

NOTICE TO BIDDERS

This Addendum forms a part of the Contract and modifies the original bidding documents. It is intended that all work affected by the following modifications shall conform with related provisions and general conditions of the Contract of the original drawings and specifications. Modify the following items wherever appearing in any drawings or sections of the specifications. Acknowledge receipt of ADDENDUM NO. 01 (ONE) in the space provided on the Bid Form. Failure to do so may subject to disqualification.

REVISIONS TO THE PROCUREMENT AND CONTRACTING DOCUMENTS

ITEM No. 001 NOTICE TO CONTRACTORS CALLING FOR BIDS

A. REPLACE form in its entirety.
   1. REVISE 'BID DEADLINE'.
   2. REVISE 'INSURANCE REQUIREMENTS'

See attachment: NOTICE TO CONTRACTORS CALLING FOR BIDS ADD-01 (ONE)

ITEM No. 002 CERTIFICATE OF ATTENDANCE AT MANDATORY JOB WALK

A. REPLACE form in its entirety.

See attachment:
CERTIFICATE OF ATTENDANCE AT MANDATORY JOB WALK ADD-01 (ONE)

REVISIONS TO THE PROJECT MANUAL

ITEM No. 003 PROJECT MANUAL

A. REPLACE the Project Manual in its entirety with DSA approved version.
   1. No content revisions have been made due to the DSA approval process.

See attachment: A03-122664_SPC_A

pjhm·architects
OC/// 24461 Ridge Route Drive #100 • Laguna Hills CA 92653 P/// 949-496-6191
SD/// 804 Pier View Way #103 • Oceanside CA 92054 P/// 760-730-5527
PJHM.COM

addendum

REVISIONS TO THE DRAWINGS

ITEM No. 004 DRAWINGS

A. REPLACE Drawings in its entirety with DSA approved version.
   1. Revisions due to DSA approval process have been clouded and identified with a delta '1'. Revisions occur on the following sheets:
      a. C-0 SITE DEMOLITION PLAN
      b. C-4 GRADING PLAN – ADDITIONAL VIEWS
      c. A-0.2 BUILDING ANALYSIS
      d. A-1.0 SITE PLAN
      e. A-1.2 SITE PLAN – ENLARGED
      f. A-1.4 SITE DETAILS – FENCES & GATES
      g. A-3.2 FLOOR PLAN
      h. A-4.2 REFLECTED CEILING PLAN
      i. A-7.3 BUIDLING SECTIONS
      j. A-8.6 WALL SECTIONS
      k. A-9.1 INTERIOR ELEVATIONS
      l. A-11.0 FINISH SCHEDULE
      m. A-14.0 ACCESSIBILITY DETAILS

See attachment: A03-122664_DWG_A

GENERAL INFORMATION/CLARIFICATIONS

ITEM No. 005 DSA-103-19: LISTING OF STRUCTURAL TESTS & SPECIAL INSPECTIONS, 2019 CBC

A. AVAILABLE INFORMATION: This project contains a DSA-103-19.

See attachment: A03-122664_DSA-103_A

ITEM No. 006 GEO-HAZARDS REPORT

A. AVAILABLE INFORMATION: This project contains a Geo-Hazards Report.

See attachment: 03-122664_Geo-Hazards Report (Dated October 2022)

ITEM No. 007 GEOTECHNICAL INVESTIGATION APPROVAL LETTER

A. AVAILABLE INFORMATION: This project contains a Geotechnical Investigation approval letter.

See attachment: 03-122664_Getechnical Approval Letter

ITEM No. 008 EXISTING SITE UTILTIY MAP

A. AVAILABLE INFORMATION: This project contains an existing site Utility Map.

See attachment: 03-122664_Utility Map

ITEM No. 009 PRE-BID REQUEST FOR INFORMATION (RFI) RESPONSES

A. AVAILABLE INFORMATION: This project contains Pre-Bid RFI's. Responses have been provided.

See attachment: 03-122664_Pre-Bid RFI Responses ADD-01

END OF ADDENDUM

pjhm·architects
OC///24461 Ridge Route Drive #100 • Laguna Hills CA 92653 P///949-496-6191
SD///804 Pier View Way #103 • Oceanside CA 92054 P///760-730-5527
PJHM.COM

KERN HIGH SCHOOL DISTRICT

02-NOTICE TO CONTRACTORS CALLING FOR BIDS

ADDENDUM NO. ONE

1. OWNER: Kern High School District

2. PROJECT IDENTIFICATION NAME: BID NO. 5571 – HIGHLAND HIGH SCHOOL: 50-METER POOL & AQUATICS CENTER

3. PROJECT LOCATION: HIGHLAND HIGH SCHOOL
2900 ROYAL SCOTS WAY
BAKERSFIELD, CA 93306

4. PROJECT DESCRIPTION: New plaster competition pool with covered concrete bleachers, masonry buildings housing locker rooms, classroom, restrooms, and pump house. Project also includes sports & egress lighting.

This project is anticipated to start on approximately July 3, 2023, and will have a duration of Four Hundred Twenty-Eight (428) calendar days for completion.

5. BID DEADLINE: Bids are due on ~~**WEDNESDAY, MAY 31, 2023, at 2:**00PM~~ **FRIDAY, JUNE 2, 2023, at 2:00 p.m.** or at any other date or time as set by Addendum.

6. PLACE OF BID RECEIPT: Kern High School District (OWNER)
Conference Room "A"
5801 Sundale Avenue
Bakersfield, CA 93309

7. METHOD OF BID RECEIPT: Personal delivery, courier, or mailed via United States Postal Service to above address:

Richard J. Ruiz, Director
KERN HIGH SCHOOL DISTRICT
Business Services Department
5801 Sundale Avenue
Bakersfield, CA 93309

8. PLANS ARE AVAILABLE AT: (Hard Copy and CD's) Kern High School District (OWNER)
Business Services Department
5801 Sundale Avenue
Bakersfield, CA 93309
(661) 827-3122

OR DOWNLOAD PDF: http://www.kernhigh.org/apps/pages/businessservices

9. SEALED BID MARKING: BID NO. 5571 – HIGHLAND HIGH SCHOOL: 50-METER POOL & AQUATICS CENTER

10. ALTERNATES: If alternate bids are called for, the contract will be awarded to the lowest

responsive and responsible bidder on the basis indicated below:

☒ (a) The lowest bid shall be the lowest bid price on the base contract without consideration of the prices on the additive or deductive items.

☐ (b) The lowest bid shall be the lowest total of the combined bid prices on the base contract and alternates [identify alternate bid items by number or description] ____ _____.

☐ (c) The lowest bid shall be the lowest total of the bid prices on the base contract and alternates [identify alternate bid items by number or description] _____, taken in order, up to a maximum amount to be publicly disclosed before the first bid is opened.

☐ (d) The lowest bid shall be determined in a manner that prevents any information that would identify any of the bidders or proposed subcontractors or suppliers from being revealed to the public entity before the ranking of all bidders from lowest to highest has been determined.

☐ (e) Not applicable to this project, as no alternates are requested.

11. ***MANDATORY*** **JOB WALK AND PRE-BID MEETING:**

MANDATORY **JOB WALK AND PRE-BID MEETING:**
Meet at: HIGHLAND HIGH SCHOOL NEAR THE STADIUM ENTRY (Just off Claymore Street)

Tuesday, May 16, 2023 10:00a.m.
Date Time

Location: 2900 Royal Scots Way, Bakersfield, CA 93306

A job walk or pre-bid meeting is **required** on this project. Attendance at the entire job walk or meeting is **mandatory** and failure to attend the entire job walk or entire meeting will result in your bid being rejected as non-responsive. Contact OWNER for details on required job walks, bid meetings, and related documentation.

12. PLAN DEPOSIT REQUIRED: **Initial Set: $0.00** **Additional sets: $100.00 per set**

13. This project ☒ **requires** ☐ does not require prequalification pursuant to Public Contract Code section 20111.6 of all general contractors and all mechanical, electrical and plumbing subcontractors (C-4, C-7, C-10, C-16, C-20, C-34, C-36, C-38, C-42, C-43, and C53) (see Section 14 of the Instructions to Bidders, and other bid package documents, for details). If required, a prequalification package may be obtained by downloading the necessary forms from www.kernhigh.org.

14. This is a prevailing wage project. OWNER has ascertained the general prevailing rate of per diem wages in the locality in which this work is to be performed for each craft or type of worker needed to execute this contract. These rates are on file at OWNER'S office, and a copy may be obtained upon request, or at www.dir.ca.gov. A copy of these rates shall be posted at the job site.

It shall be mandatory upon the contractor to whom the contract is awarded (CONTRACTOR), and upon any subcontractor, to pay not less than the specified rates to all workers employed by them in the execution of the contract.

15. The contract to be awarded on this project includes provisions for assessment of liquidated damages pursuant to Government Code Section 53069.85 and Public Contract Code section 7203 in the amount of **$2,000.00 per calendar day**.

16. A Payment Bond for contracts over $25,000 and a Performance Bond for all contracts will be required prior to commencement of work. These bonds shall be in the amounts and form called for in the Contract Documents.

17. Pursuant to the provisions of Public Contract Code Section 22300, CONTRACTOR may substitute certain securities for any funds withheld by OWNER to ensure CONTRACTOR'S performance under the contract. At the request and expense of CONTRACTOR, securities equivalent to any amount withheld shall be deposited, at the discretion of OWNER, with either OWNER or a state or federally chartered bank as the escrow agent, who shall then pay any funds otherwise subject to retention to CONTRACTOR. Upon satisfactory completion of the contract, the securities shall be returned to CONTRACTOR.

    Securities eligible for investment shall include those listed in Government Code Section 16430, bank and savings and loan certificates of deposit, interest bearing demand deposit accounts, standby letters of credit, or any other security mutually agreed to by CONTRACTOR and OWNER. CONTRACTOR shall be the beneficial owner of any securities substituted for funds withheld and shall receive any interest on them. The escrow agreement shall be in the form indicated in the Contract Documents.

18. To perform the work required by this Notice, CONTRACTOR must possess a valid and active contractor's license of the following classification: ____B____.

19. This Project is subject to the requirements of Subchapter 4.5 of Chapter 8 of Title 8 of the California Code of Regulations for compliance monitoring and enforcement by the DIR. Contractor and all subcontractors must furnish certified payroll records to the Department of Industrial Relations' Division of Labor Standards Enforcement (DSLE) [specify weekly, bi-weekly, or monthly] using the eCPR system. To enroll or obtain additional information and assistance, go to DIR eCPR website at https://www.dir.ca.gov/Public-Works/Certified-Payroll-Reporting.html.

    Public works projects shall be subject to compliance monitoring and enforcement by the Department of Industrial Relations. A contractor or subcontractor shall not be qualified to submit a bid or to be listed in a bid proposal subject to the requirements of Public Contract Code section 4104 unless currently registered and qualified under Labor Code section 1725.5 to perform public work as defined by Division 2, Part 7, Chapter 1 (§§1720 et seq.) of the Labor Code. A contractor or subcontractor shall not be qualified to enter into, or engage in the performance of, any contract of public work (as defined by Division 2, Part 7, Chapter 1 (§§1720 et seq.) of the Labor Code) unless currently registered and qualified under Labor Code section 1725.5 to perform public work.

    The following notice is given as required by Labor Code Section 1771.5(b)(1): CONTRACTOR and any subcontractors are required to review and comply with the provisions of the California Labor Code, Part 7, Chapter 1, beginning with Section 1720, as more fully

discussed in the Contract Documents. These sections contain specific requirements concerning, for example, determination and payment of prevailing wages, retention, inspection, and auditing payroll records, use of apprentices, payment of overtime compensation, securing workers' compensation insurance, and various criminal penalties or fines which may be imposed for violations of the requirements of the chapter. Submission of a bid constitutes CONTRACTOR'S representation that CONTRACTOR has thoroughly reviewed these requirements.

20. This project ☐ has ☒ has not been found to be substantially complex and to require a retention greater than 5%. As such, the OWNER ☐ will ☒ will not retain more than 5% of the amount of any progress payments.

21. Insurance Requirements: CONTRACTOR shall provide the following insurance coverages, which shall remain in full force and effect during the Project. Bidders are referred to Article 58 of the General Conditions for more detailed information.

☒ **Workers' Compensation**
☒ **Comprehensive General Liability**
☐ **Requirement A - $1,000,000 per Occurrence, $2,000,000 Aggregate**
☒ ~~**Requirement B - $2,000,000 per Occurrence, $4,000,000 Aggregate**~~
☒ **Requirement C - $5,000,000 per Occurrence, $10,000,000 Aggregate**
☐ **Excess/Umbrella Coverage $5,000,000.00 per Occurrence, $10,000,000 Aggregate**

☒ **CONTRACTOR shall require its subcontractors, if any, to take out and maintain commercial liability insurance with policy limits not less than $1,000,000 per occurrence and $2,000,000 aggregate per project on bodily injury and property damage.**

☒ **Comprehensive Auto Liability**

☒ **Course of Construction/Builder's Risk**

Approved:
KERN HIGH SCHOOL DISTRICT
Business Services Department

By: _____
Jenny Hannah Brown
Director, Facilities Planning

GOVERNING BOARD

By: _____
Mike Zulfa, Ed.D.
Associate Superintendent, Business

KERN HIGH SCHOOL DISTRICT

11-CERTIFICATE OF ATTENDANCE AT MANDATORY JOB WALK

ADDENDUM NO. ONE

On contracts including a mandatory job walk, this form must be submitted with the bid or bidder may be declared "non-responsive".

BID NO. 5571 - HIGHLAND HIGH SCHOOL: 50-METER POOL AND AQUATICS CENTER

It is the District's intention to provide all contractors with equal access to information regarding this contract. Further, the District has issued plans and specifications to the Contractor and has allowed the Contractor the opportunity to inspect the site with knowledgeable personnel at the job walk. Therefore, it is understood that the District may declare the bid non-responsive for any of the following conditions:

1. If Contractor, or a representative, attends the entire mandatory job walk but fails to complete and submit this form.

2. If Contractor, or a representative, fails to attend the entire mandatory job walk and fails to complete and submit this form; or

3. If Contractor, or a representative, fails to attend the entire mandatory job walk but certifies that he/she was in attendance. *[NOTE: This may also lead to a determination that Contractor is non-responsible.]*

Please check one of the following:

___ I, or my representative, attended the entire mandatory job walk.

OR

___ I, or my representative, did not attend the entire mandatory job walk.

I hereby certify under penalty of the perjury laws of the State of California that the foregoing is true and correct.

Executed at _____, California, on _____, 2023.

Firm Name _____

By _____

Printed Name _____

Title _____

PROJECT MANUAL

HIGHLAND HIGH SCHOOL
50M POOL & AQUATICS CENTER
A03-122664

KERN HIGH SCHOOL DISTRICT

pjhm architects

PROJECT TITLE SHEET
01 01 01

HIGHLAND HIGH SCHOOL
50M POOL & AQUATICS CENTER
A03-122664



CIVIL

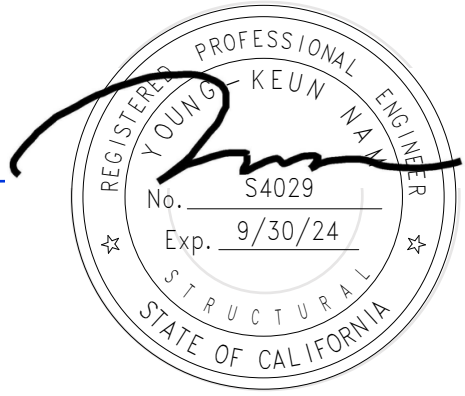

STRUCTURAL



MECHANICAL



LANDSCAPE



FIRE PROTECTION

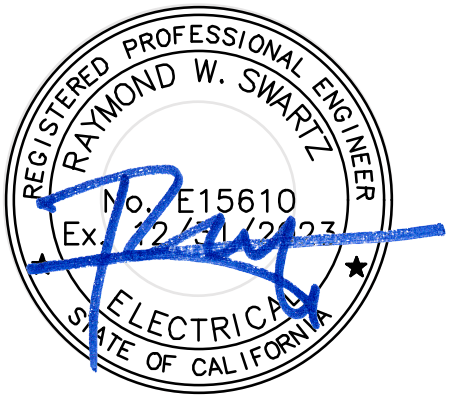

ELECTRICAL

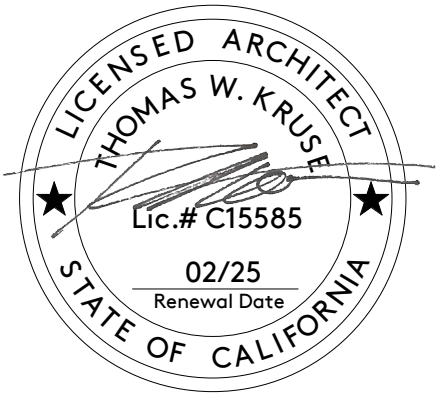

ARCHITECT



AQUATICS



MUSCO LIGHTING

IDENTIFICATION STAMP
DIV. OF THE STATE ARCHITECT

APP: 03-122664 INC:

REVIEWED FOR

SS ☑ FLS ☑ ACS ☑

DATE: 05/12/2023

SEALS PAGE
00 01 07 - 1

SECTION 00 01 10
TABLE OF CONTENTS

01 01 01	PROJECT TITLE SHEET
00 01 07	SEALS PAGE
00 01 10	TABLE OF CONTENTS
DIVISION 01	**GENERAL REQUIREMENTS**
01 11 00	SUMMARY OF WORK
01 20 00	PRICE AND PAYMENT PROCEDURES
01 21 00	ALLOWANCES
01 23 00	ALTERNATES
01 25 00	SUBSTITUTION PROCEDURES
01 31 00	PROJECT MANAGEMENT AND COORDINATION
01 32 16	CONSTRUCTION PROGRESS SCHEDULE
01 33 00	SUBMITTAL PROCEDURES
01 42 19	REFERENCE STANDARDS
01 45 00	QUALITY CONTROL
01 52 00	CONSTRUCTION FACILITIES
01 57 00	TEMPORARY CONTROLS
01 60 00	PRODUCT REQUIREMENTS
01 74 00	CLEANING AND WASTE MANAGEMENT
01 77 00	CLOSEOUT PROCEDURES
01 78 30	WARRANTIES AND BONDS
DIVISION 03	**CONCRETE**
03 10 00	CONCRETE FORMING AND ACCESSORIES
03 20 00	CONCRETE REINFORCING
03 24 00	SYNTHETIC FIBER REINFORCEMENT
03 30 00	CAST-IN-PLACE CONCRETE
03 35 42	POLISHED CONCRETE FINISHING
03 83 00	TEMPORARY SURFACE PROTECTION
DIVISION 04	**MASONRY**
04 22 00	CONCRETE UNIT MASONRY
DIVISION 05	**METALS**
05 05 13	SHOP-APPLIED METAL FINISHES
05 12 00	STRUCTURAL STEEL FRAMING
05 31 00	STEEL DECKING
05 40 00	COLD-FORMED METAL FRAMING
05 50 00	METAL FABRICATIONS
05 73 00	DECORATIVE METAL RAILINGS
DIVISION 06	**WOODS, PLASTICS, AND COMPOSITES**
06 10 00	ROUGH CARPENTRY
06 16 43	GYPSUM SHEATHING

DIVISION 07 THERMAL AND MOISTURE PROTECTION
07 13 26 SELF-ADHERING SHEET WATERPROOFING
07 16 16 CRYSTALLINE WATERPROOFING
07 19 00 WATER REPELLENTS
07 21 00 BATT INSULATION
07 21 16 ROOF BOARD INSULATION
07 25 00 WATER-RESISTIVE BARRIERS
07 26 16 BELOW-GRADE VAPOR RETARDERS
07 50 01 GYPSUM ROOF BOARDS
07 54 00 THERMOPLASTIC MEMBRANE ROOFING
07 62 00 SHEET METAL FLASHING AND TRIM
07 65 10 FLUID APPLIED FLASHING MEMBRANE
07 65 26 SELF-ADHERING SHEET FLASHING
07 72 00 ROOF ACCESSORIES
07 84 43 JOINT FIRESTOPPING
07 92 00 JOINT SEALANTS

DIVISION 08 OPENINGS
08 11 13 HOLLOW METAL DOORS AND FRAMES
08 16 13 FIBERGLASS DOORS AND FRAMES
08 31 00 ACCESS DOORS AND PANELS
08 51 13 ALUMINUM WINDOWS
08 71 00 DOOR HARDWARE
08 80 00 GLAZING

DIVISION 09 FINISHES
09 24 00 PORTLAND CEMENT PLASTER
09 29 00 GYPSUM BOARD
09 30 00 TILING
09 51 13 ACOUSTICAL CEILINGS
09 53 00 ACOUSTICAL CEILING SUSPENSION ASSEMBLIES
09 65 13 RESILIENT BASE AND ACCESSORIES
09 67 72 RESINOUS FLOORING
09 72 00 PRESENTATION DRY ERASE WALLCOVERING
09 91 13 EXTERIOR PAINTING
09 91 23 INTERIOR PAINTING
09 96 56 EPOXY COATINGS
09 97 13 STEEL COATINGS

DIVISION 10 SPECIALTIES
10 11 16 MARKERBOARDS
10 14 67 TACTILE SIGNAGE
10 21 13 TOILET COMPARTMENTS
10 26 13 CORNER GUARDS
10 28 00 TOILET, BATH, AND LAUNDRY ACCESSORIES
10 44 16 FIRE EXTINGUISHERS AND CABINETS
10 51 13 METAL LOCKERS

DIVISION 12 FURNISHINGS
12 21 23 ROLL-DOWN BLINDS
12 36 16 STAINLESS STEEL COUNTERTOPS
12 36 19 BUTCHER BLOCK BENCH TOPS

DIVISION 13 SPECIAL CONSTRUCTION
13 11 00 SWIMMING POOL GENERAL REQUIREMENTS
13 11 01 SWIMMING POOL EXCAVATION
13 11 02 SWIMMING POOL CONCRETE
13 11 03 SWIMMING POOL SHOTCRETE
13 11 04 SWIMMING POOL CERAMIC TILE
13 11 05 SWIMMING POOL PLASTER
13 11 06 SWIMMING POOL EQUIPMENT
13 11 07 SWIMMING POOL MECHANICAL
13 11 08 SWIMMING POOL ELECTRICAL

DIVISION 21 FIRE SUPPRESSION
21 11 00 FACILITY FIRE-SUPPRESSION WATER-SERVICE PIPING
21 13 13 WET-PIPE FIRE SPRINKLER SYSTEMS

DIVISION 22 PLUMBING
22 05 00 GENERAL PLUMBING REQUIREMENTS
22 05 10 GENERAL PLUMBING MATERIALS
22 40 00 PLUMBING FIXTURES
22 70 00 PLUMBING SYSTEMS

DIVISION 23 HEATING, VENTILATING, AND AIR CONDITIONING (HVAC)
23 05 00 GENERAL MECHANICAL REQUIREMENTS
23 05 10 GENERAL MECHANICAL MATERIALS
23 05 93 HVAC AIR BALANCING
23 09 23 DIRECT DIGITAL CONTROLS
23 31 00 AIR DISTRIBUTION
23 34 00 EXHAUST SYSTEM
23 34 39 HIGH VOLUME LOW SPEED PROPELLER FANS
23 70 00 HVAC SYSTEMS

DIVISION 26 ELECTRICAL
26 10 00 GENERAL ELECTRICAL SPECIFICATIONS

DIVISION 27 COMMUNICATIONS
27 10 00 STRUCTURED CABLING SYSTEM
27 41 00 AUDIOVISUAL SYSTEMS
27 50 00 PUBLIC ADDRESS AND PAGING

DIVISION 28 ELECTRONIC SAFETY AND SECURITY
28 16 00 INTRUSION ALARM SYSTEM
28 31 11 FIRE ALARM AND VOICE EVACUATION SYSTEM

DIVISION 31 EARTHWORK
31 10 00 SITE CLEARING
31 20 00 EARTH MOVING
31 23 26 BASE COURSE

DIVISION 32 EXTERIOR IMPROVEMENTS
32 12 16 ASPHALT PAVING
32 12 36 SEAL COATS
32 13 13 CONCRETE PAVING
32 17 23 PAVEMENT MARKINGS
32 31 13 CHAIN LINK FENCES AND GATES
32 84 00 IRRIGATION SYSTEMS
32 93 00 PLANTING
32 94 00 TREE PROTECTION AND TRIMMING

DIVISION 33 UTILITIES
33 11 00 WATER UTILITY DISTRIBUTION PIPING
33 30 00 SANITARY SEWERAGE UTILITIES
33 40 00 STORM DRAINAGE UTILITIES

END OF SECTION

SECTION 01 11 00
SUMMARY OF WORK

PART 1 GENERAL

1.01 SUMMARY
- A. Section Includes
  - 1. Summary of Work
- B. Products Supplied But Not Installed Under This Section
- C. Products Installed But Not Supplied Under This Section
- D. Related Sections
- E. Allowances
- F. Unit Prices
- G. Measurement Procedures
- H. Payment Procedures
- I. Alternates

1.02 REFERENCES
- A. Work of the Contract can be summarized by references to the Contract, Agreement, General Conditions, Special Conditions, Supplemental Conditions, Specification, Drawings, Addenda and modifications to the contract documents issued subsequent to the initial printing of this project manual and including, but not necessarily limited to, printed material referenced by any of these. It is recognized that work of the contract is also unavoidably affected or influenced by governing regulations, natural phenomenon including weather conditions and other forces outside the contract documents.

1.03 DEFINITIONS

1.04 SYSTEM DESCRIPTIONS
- A. Design Requirements, Performance Requirements
  - 1. Provide quality workmanship for the related work indicated and specified herein, meeting the quality standards of the trades affected by the scope of work per these contract documents.
- B. Project/Work Identification
  - 1. DEMOLITION OF:
    - (E) SITE WORK
  - 2. ALTERATION OF:
    - (E) PARKING LOT 'C' - ACCESSIBLE PARKING UPGRADES, FIRE LANE ROUTE
  - 3. CONSTRUCTION OF:
    - (N) 50M OUTDOOR POOL, POOL DECK
    - (N) BUILDING 'A' - POOL LOCKER ROOMS, RESTROOMS
    - (N) BUILDING 'B' - POOL CLASSROOM, TIERED SEATING, RESTROOMS
    - (N) BUILDING 'C' - POOL PUMP HOUSE
    - (N) PASSENGER DROP-OFF & LOADING ZONE
    - (N) ILLUMINATED SAFE-DISPERSAL AREA
    - (N) SITE IMPROVEMENTS

1.05 SUBMITTALS

1.06 QUALITY ASSURANCE
- A. Qualifications
- B. Regulatory Requirements
  1. The contract documents indicate the intended occupancy and utilization of the buildings and its individual systems and facilities, compliance with governing regulations is intended and required for the work and for the owner's occupancy and utilization.
- C. Certifications
- D. Field Samples
- E. Mock-ups
- F. Pre-installation Meetings

1.07 DELIVERY, STORAGE, AND HANDLING
1.08 PROJECT CONDITIONS
1.09 SEQUENCING
1.10 SCHEDULING
1.11 WARRANTY
1.12 SYSTEM STARTUP
1.13 OWNER'S INSTRUCTIONS
1.14 COMMISSIONING
1.15 MAINTENANCE

PART 2 PRODUCTS

NOT APPLICABLE

PART 3 EXECUTION
NOT APPLICABLE

END OF SECTION

SECTION 01 20 00
PRICE AND PAYMENT PROCEDURES

PART 1 GENERAL

1.01 SUMMARY
- A. Section Includes
  1. Payment Procedures
  2. Schedule of Values
- B. Products Supplied But Not Installed Under This Section
- C. Products Installed But Not Supplied Under This Section
- D. Related Sections
  1 01 21 00 Allowances
  2. 01 23 00 Alternates
  3. 01 32 16 Construction Progress Schedule
  4. 01 77 00 Closeout Procedures
- E. Allowances
- F. Unit Prices
- G. Measurement Procedures
- H. Payment Procedures
- I. Alternates

1.02 REFERENCES
1.03 DEFINITIONS
1.04 SYSTEM DESCRIPTIONS
1.05 SUBMITTALS
- A. Product Data
- B. Shop Drawings
- C. Samples
- D. Quality Assurance/Control Submittals
  1. Schedule of Values
     a. Submit a Preliminary Schedule of Values to the ARCHITECT and OWNER for review and approval within 5 calendar days after the date of OWNER issued Notice of Intent to Award (N.O.I.). Submit a PDF copy in Microsoft Excel spreadsheet format. AIA Document G703-1992 will not be accepted.
        1. Preliminary Schedule of Values to include all trades, General Conditions, General Contractor's Overhead and Profit, and bonds and insurance for each site.
        2. Review and approval of Preliminary Schedule of Values by the ARCHITECT and OWNER shall be required prior to award of the construction contract.
     b. Submit a Final Schedule of Values to the ARCHITECT for review and approval within 15 calendar days after the date of OWNER-CONTRACTOR Agreement. Submit a PDF copy in Microsoft Excel spreadsheet format. AIA Document G703-1992 will not be accepted.
     c. In the Schedule of Values, the Contract Sum shall be broken down into specific elements of the Work, as follows, coded in accordance with the OWNER'S coding structure.
        1. General Contractor's Overhead and Profit
        2. Site Mobilization
        3. Bonds and Insurance

4. Field Supervision
5. Project Close-Out (Section of General Requirements)
6. Other General Conditions and General Requirements
7. Demolition each item/element itemized.
8. Site Clearing and Preparation
9. Site Earthwork
10. Site Improvements (Paving, etc.)
11. Site Utilities
12. Landscape Irrigation
13. Landscape Planting
14. Each CSI Format Division 2 through 48
15. HVAC Work
16. Plumbing
17. Fire Protection Sprinklers
18. Electrical Power and Lighting
19. Electrical Site Lighting
20. Fire Alarm and Smoke Detection Systems
21. Electrical Communications and Security Systems
22. Project Allowance

d. On projects of more than one building, provide separate schedules for each building.

e. The percent-complete values from the approved cost-loaded Construction Progress Schedule shall provide the basis for each Application for Payment. Before each Application, update the Progress Schedule with all approved Change Orders.

2. Application For Payment

a. Payment Application Forms: Use OWNER provided forms for the Application for Payment.

b. Submit Application for Payment to the ARCHITECT (four (4) signed original copies of each certified application). All copies shall be complete, including the updated Schedule of Values and Construction Progress Schedule, releases and similar attachments. Transmit each copy with a transmittal form listing attachments and recording appropriate information related to the application, in a manner acceptable to ARCHITECT.

c. Each certified Application for Payment shall be consistent with previous applications and payments as reviewed by ARCHITECT and paid for by OWNER.

d. Payment Application Times: The period of Work covered by each Application for Payment is based on the payment date for each progress payment as specified in the General Conditions. The period covered by each Application for Payment is the previous month.

e. Initial Application for Payment: Administrative actions and submittals that must precede or coincide with the first certified Application for Payment include, but are not limited to, the following:

1. Certified Schedule of Values or Cost-Loaded Schedule
2. Performance and payment bonds
3. List of principal suppliers and fabricators

4. Worker Compensation certificates
5. Auto Insurance
6. Hazardous Material Insurance Certificates
7. Construction Progress Schedule
8. Submittal Schedule
9. Emergency Contact List
10. Copies of authorizations and licenses from governing authorities for performance of the Work

f. Application for Payment at Substantial Completion: Following OWNER issuance of the certificate of Substantial Completion, submit an Application for Payment together with the following:
1. Occupancy permits and similar approvals by authorities having legal jurisdiction over the Work
2. Removal of temporary facilities and services
3. Testing, adjusting and balance records
4. Removal of surplus materials, rubbish, and similar elements
5. Meter readings
6. Start-up performance reports
7. OWNER training and orientations
8. Change-over information related to OWNER occupancy, use, operation, and maintenance
9. Final cleaning
10. Ensure that incomplete Work is not accepted and will be completed without undue delay
11. Advice on shifting insurance coverage
12. List of defective Work, recognized as exceptions to certificate of Substantial Completion
13. Change of door locks to OWNER system

g. Final Payment Application: Administrative actions and submittals that must precede or coincide with submittal of the final Application for Payment include, but are not limited to, the following:
1. Completion of Contract Closeout requirements
2. Project record and other closeout documents
3. Completion of final punch list items
4. Delivery of extra materials, products and or stock
5. Identification of unsettled claims
6. Proof that taxes, fees, and similar obligations are paid
7. Evidence of payment and release of liens
8. Operating and maintenance instruction manuals
9. Consent of surety to final payment
10. Waivers and releases
11. Warranties, guarantees and maintenance agreements

h. Retention
1. Retention will be released no sooner than 35 days and not later than 60 days after Notice of Completion has been recorded with the County Recorder's Office.

E. Closeout Submittals

1.06 QUALITY ASSURANCE
1.07 DELIVERY, STORAGE, AND HANDLING
1.08 PROJECT CONDITIONS
1.09 SEQUENCING
1.10 SCHEDULING
1.11 WARRANTY
1.12 SYSTEM STARTUP
1.13 OWNER'S INSTRUCTIONS
1.14 COMMISSIONING
1.15 MAINTENANCE

PART 2 PRODUCTS

NOT APPLICABLE

PART 3 EXECUTION

NOT APPLICABLE

END OF SECTION

SECTION 01 21 00
ALLOWANCES

PART 1 GENERAL

1.01 SUMMARY
- A. Section Includes
  1. Submission Procedures
  2. Change Procedures
  3. Schedule of Allowances
- B. Products Supplied But Not Installed Under This Section
- C. Products Installed But Not Supplied Under This Section
- D. Related Sections
- E. Allowances
  1. Add monetary value of scheduled allowances to base bid price.
  2. Change Order Items which occur during the course of construction shall be deducted from the allowance set forth for each CONTRACTOR.
  3. Change Items will be processed as described in the General Conditions of the Contract and will be included in a formal Change Order. All Change Orders must be signed by the ARCHITECT, OWNER and CONTRACTOR prior to fabrication or use.
  4. Any portion of the allowance remaining at the end of the project shall be deducted from the contract via Change Order.
  5. For schedule of allowances, see section 3.15.
- F. Unit Prices
- G. Measurement Procedures
- H. Payment Procedures
- I. Alternates

1.02 REFERENCES
1.03 DEFINITIONS
1.04 SYSTEM DESCRIPTIONS
1.05 SUBMITTALS
1.06 QUALITY ASSURANCE
1.07 DELIVERY, STORAGE, AND HANDLING
1.08 PROJECT CONDITIONS
1.09 SEQUENCING
1.10 SCHEDULING
1.11 WARRANTY
1.12 SYSTEM STARTUP
1.13 OWNER'S INSTRUCTIONS
1.14 COMMISSIONING
1.15 MAINTENANCE

PART 2 PRODUCTS

NOT APPLICABLE

PART 3 EXECUTION

3.01 INSTALLERS
3.02 EXAMINATION
3.03 PREPARATION
3.04 ERECTION
3.05 INSTALLATION
3.06 APPLICATION
3.07 CONSTRUCTION
3.08 REPAIR/RESTORATION
3.09 RE-INSTALLATION
3.10 FIELD QUALITY CONTROL
3.11 ADJUSTING
3.12 CLEANING
3.13 DEMONSTRATION
3,14 PROTECTION
3.15 SCHEDULES

A. DISTRICT-CONTROLLED ALLOWANCE FOR UNFORESEEN CONDITIONS ("UNFORESEEN CONDITIONS ALLOWANCE"):

Contractor shall include within its Bid an allowance amount of:

ZERO ($0)

This Unforeseen Conditions Allowance shall be controlled by the District, and any allowance amounts can only be used as directed & approved by the District. The Unforeseen Conditions Allowance may include costs as allocated in the District's sole and absolute discretion related to the Project. Contractor shall include a line item within its Schedule of Values (SOV) for the Unforeseen Conditions Allowance. Any funds remaining in the Unforeseen Conditions Allowance at the completion of the Project shall remain unspent and be credited to the District in full – and will be deducted, via change order, from the Contractor's contract amount.

END OF SECTION

SECTION 01 23 00
ALTERNATES

PART 1 GENERAL

1.01 SUMMARY
- A. Section Includes
  1. Submission Procedures
  2. Documentation of changes to Contract Sum/Price and Contract Time
- B. Products Supplied But Not Installed Under This Section
- C. Products Installed But Not Supplied Under This Section
- D. Related Sections
- E. Allowances
- F. Unit Prices
- G. Measurement Procedures
- H. Payment Procedures
- I. Alternates
  1. Indicate variation of Bid Price for Alternates described below and list in the Proposal any supplement to it, which requests a "difference" in Bid Price by [adding to] or [deducting from] the base bid price.
  2. Coordinate related work and modify surrounding work to integrate the Work of each Alternate.
  3. Alternates quoted in the Proposal will be reviewed and accepted or rejected as stated in the Information for Bidders. Accepted Alternates will be identified in the Notice of Award.
  4. Once the responsible Bidder has been selected, the OWNER may determine to add to or deduct from the Contract any of the additive or deductive items in accordance with the Information for Bidders.
  5. For schedule of alternates, see section 3.15.

1.02 REFERENCES
1.03 DEFINITIONS
1.04 SYSTEM DESCRIPTIONS
1.05 SUBMITTALS
1.06 QUALITY ASSURANCE
1.07 DELIVERY, STORAGE, AND HANDLING
1.08 PROJECT CONDITIONS
1.09 SEQUENCING
1.10 SCHEDULING
1.11 WARRANTY
1.12 SYSTEM STARTUP
1.13 OWNER'S INSTRUCTIONS
1.14 COMMISSIONING
1.15 MAINTENANCE

PART 2 PRODUCTS

NOT APPLICABLE

PART 3 EXECUTION

3.15 SCHEDULES

A. Alternate Bid No. 1 – Elimination of High-Volume Low-Speed (HVLS) Propeller Fans
   1. Base Bid Condition: Provide as detailed/specified.
   2. Alternate Bid Condition: Eliminate HVLS Propeller Fans

      Alternate bid condition not applicable to:
      a. Installation of signal pathways for HVLS fans
      b. Installation of power pathways for HVLS fans
      c. Installation of structural steel members supporting HVLS Propeller Fans

END OF SECTION

SECTION 01 25 00
SUBSTITUTION PROCEDURES

PART 1 GENERAL

1.01 SUMMARY
- A. Section Includes
  1. Provide, install, and finish of products specified under options and conditions for substitutions stated in this section of specifications and as needed for a complete, proper, and operable installation.
- B. Products Supplied But Not Installed Under This Section
- C. Products Installed But Not Supplied Under This Section
- D. Related Sections
- E. Allowances
- F. Unit Prices
- G. Measurement Procedures
- H. Payment Procedures
- I. Alternates

1.02 REFERENCES

1.03 DEFINITIONS

1.04 SYSTEM DESCRIPTIONS
- A. Products List
  1. Submit six (6) copies of complete list of major products and systems which are proposed for installation. Include Substitution Request Form attached to the end of this specification. Digital submissions may be accepted at ARCHITECT'S discretion.
  2. Tabulate products and systems by specifications section number and title.
  3. For products and systems specified only by reference standards, list for each such product or system:
     a. Name and address of manufacturer or fabricator.
     b. Trade name.
     c. Model or catalog designation, including date.
     d. Manufacturer's or fabricator's data and literature on: Reference standards, performance test data, certifications.
- B. Specified Options
  1. For products specified only by reference standard, select product meeting that standard, by any manufacturer.
  2. For products specified by naming several products or manufacturers, select any one (1) of the products or manufacturers named.
  3. For products specified by naming one (1) or more products or manufacturers and stating "or equal", submit a request for substitutions for any product or manufacturer which is not specifically named, but only after submitting bid on specified products and systems.

C. Submission of Data Substantiating a Request for a Substitution of "An Equal Item"

1. A substitution request must be submitted to the OWNER not later than seven (7) days prior to the Bid Deadline specified in the Notice Inviting Bids. The OWNER will not consider any substitution request received thereafter, except to the extent provided in the General Conditions. Concurrently with submitting a substitution request, the Bidder must provide all information required pursuant to the General Conditions to substantiate the request. The OWNER shall not be required to make a determination in regard to any substitution request and/or substantiating information prior to award of the Contract. If the OWNER gives a Notice of Award for the Contract to a Bidder, but subsequently disapproves a substitution proposed by that Bidder, the Bidder must provide the Specified Item in accordance with the Contract Documents and at no additional cost to the OWNER.
2. It is the intent of the OWNER and ARCHITECT to have this project constructed with materials, products and systems originally designed and specified into project. This opportunity to request substitutions is not for the convenience of bidders or CONTRACTORS to submit bids for materials, products and systems which may be more familiar to them, or having a lesser cost.
3. Submit separate request for each substitution item. Support each request with an explanation for the request, and include:
    a. Complete data substantiating compliance of proposed substitutions with requirements stated in contract documents:
        1. Product identification, including manufacturer's name and address.
        2. Manufacturer's literature; identify: Product description, reference standards, performance and test data.
        3. Samples, as applicable.
        4. Name and address of similar projects on which product has been used, and date of each installation, as well as servicing agency and installer.
    b. Itemized comparison of the proposed substitution with products specified, listing significant variations.
    c. Data relating to changes in the construction schedule.
    d. Any effect of substitution on separate contracts.
    e. Any effect of substitution on in-place construction or other materials and systems to be installed.
    f. Accurate cost data comparing proposed substitution with product specified.
    g. Designation of required license fees or royalties.
    h. Designation of availability of maintenance services and sources of replacement materials.
4. Substitutions will not be considered for acceptance when:
    a. Lesser material cost is the sole reason for request.
    b. They are indicated or implied on shop drawings or product data submittals without formal request.
    c. Acceptance may require revision of contract documents.

5. Substitute products shall not be ordered or installed without written acceptance and authorization of OWNER and ARCHITECT.
6. Substitutions shall be approved by OWNER and ARCHITECT prior to fabrication or use.
7. Only the OWNER and ARCHITECT will determine the acceptability of proposed substitutions.

D. Representations
1. In making a legitimate, authorized formal request for substitution, represent that:
a. A thorough investigation has transpired concerning the proposed product, and it has been determined that it is equal to or superior in all respects to that specified.
b. The same warranties or bonds and guarantees will be provided as for that specified.
c. Installation of the accepted substitution will be coordinated into the work; and such changes to in-place work, ordered materials and products, or other work to be in progress prior to installation of the requested substitutions, will be performed without any additional cost to OWNER.

E. Duties
1. Requests for substitutions must be expeditiously forwarded for consideration per the requirements of the General Conditions.
2. Notification of decisions concerning acceptance or rejection will be in writing, and are final without need for clarification.

1.05 SUBMITTALS
1.06 QUALITY ASSURANCE
1.07 DELIVERY, STORAGE, AND HANDLING
1.08 PROJECT CONDITIONS
1.09 SEQUENCING
1.10 SCHEDULING
1.11 WARRANTY
1.12 SYSTEM STARTUP
1.13 OWNER'S INSTRUCTIONS
1.14 COMMISSIONING
1.15 MAINTENANCE

PART 2 PRODUCTS

NOT APPLICABLE

PART 3 EXECUTION

NOT APPLICABLE

SUBSTITUTION REQUEST FORM

Date: _____

Attn: _____

PJHM Architects, Inc.
24461 Ridge Route Drive, Suite 100
Laguna Hills, CA 92653

Architect's Project No.: _____

Project: _____

Permit/Application No.: _____

The undersigned requests consideration of the following substitution:

Specified Item: _____

(Drawing Sheet/Detail No., Specification Section, Description, etc.)

_____

_____

_____

_____

Proposed Substitution:

_____

_____

_____

_____

Statement of Cause:

_____

_____

_____

_____

Special Note: Modifications to any language contained in this document is unacceptable. If modifications are made, the entire substitution package will be returned without review.

We have attached the following submittal checklist for your use, verify all items are included with your substitution request submittal.

- ❑ Substitution request has been submitted not later than seven (7) days prior to the bid deadline specified in the Notice Inviting Bids.

  Notice Inviting Bids Date:_____Substitution Request Date:_____

- ❑ Product description, specifications, drawings, photographs, performance and test data adequate for evaluation of the requests with applicable portions of the data clearly identified, manufacturer's literature, samples, names and address of the manufacturer's representative have all been provided.

- ❑ Complete documentation of all regulatory approvals required by the Contract Documents for the proposed substitution.

- ❑ Itemized comparison/analysis of proposed substitution with that of the specified product.

- ❑ Detailed cost summary of the change, if any, to the Contract Sum.

- ❑ Evaluation of the effect of the proposed substitution on the construction schedule and impact on completion date.

- ❑ Description of changes to the Contract Documents which proposed substitution will require for its proper installation.

- ❑ Manufacturer's Warranty comparison between the specified manufacturer and the proposed manufacturer.

The undersigned states that the following paragraphs, unless modified on the attachments, are correct:

A. The proposed substitution does not affect dimensions shown on the Drawings.

B. The undersigned will pay all costs for changes to the building design, including engineering design, detailing and construction costs, and LAHJ review/approval fees caused by the requested substitution.

C. The proposed substitution will have no adverse affect on other trades or specified warranty requirements.

D. Maintenance and service parts will be locally available for the proposed substitution.

The undersigned further states that the function, appearance and quality of the proposed substitution are equivalent or superior to the specified item.

Submitted By:

Name: _____ Signature: _____

Firm/Company: _____

Address: _____

Telephone: _____ Date: _____

Approved by (ARCHITECT):

Approved by (OWNER):

Name: _____ Name: _____

Signature: _____ Signature: _____

Date: _____ Date: _____

(ARCHITECT to include submittal approval stamp)

END OF SECTION

SECTION 01 31 00
PROJECT MANAGEMENT AND COORDINATION

PART 1 GENERAL

1.01 SUMMARY
- A. Section Includes
  1. Coordination.
  2. Field engineering.
  3. Pre-construction conference.
  4. Progress meetings.
  5. Pre-installation conferences.
- B. Products Supplied But Not Installed Under This Section
- C. Products Installed But Not Supplied Under This Section
- D. Related Sections
- E. Allowances
- F. Unit Prices
- G. Measurement Procedures
- H. Payment Procedures
- I. Alternates

1.02 REFERENCES

1.03 DEFINITIONS

1.04 SYSTEM DESCRIPTIONS
- A. Coordination
  1. Coordinate scheduling, submittals, and work of the various sections of the specifications to assure efficient and orderly sequence of installation of interdependent construction elements with provisions for accommodating items installed later.
  2. Prior to commencement of a particular type or kind of work, examine relevant information, Contract Documents and subsequent data issued to the project.
  3. Verify that utility requirement characteristics of operating equipment are compatible with building utilities. Coordinate work of various sections having interdependent responsibilities for installing, connecting to and placing in service, such equipment.
  4. Coordinate space requirements and installation of mechanical and electrical work, which are indicated diagrammatically on drawings. Follow routing shown for pipes, ducts and conduit, as closely as practicable; place runs parallel with line of building. Utilize spaces efficiently to maximize accessibility for other installations, for maintenance and for repairs.
  5. In finished areas, except as otherwise indicated, conceal pipes, ducts and wiring within the construction. Coordinate locations of fixtures and outlets with finish elements.
  6. In locations where several elements of mechanical and electrical work must be sequenced and positioned with precision in order to fit into available space, prepare coordination drawings showing the actual conditions required for the installation. Prepare coordination drawings prior to purchasing, fabricating or installing of the elements required to be coordinated.

7. Closing up of walls, roofs, concealed spaces, partitions, or furred spaces, backfilling and other covering up operations shall not proceed until all enclosed or covered work and inspections have been completed. Verify before proceeding.
8. Coordinate completion and clean up of work of separate sections in preparation for substantial completion (and for portions of work designated for OWNER'S full and/or partial occupancy).
9. After OWNER'S occupancy of premises, coordinate access to site for correction of defective work and work not in accordance with Contract Documents to minimize disruption of OWNER'S activities.
10. Coordinate all utility company work in accordance with the General Conditions.

B. Field Engineering (If applicable to project scope)
1. CONTRACTOR shall employ a Land Surveyor, registered in the State of California and acceptable to the ARCHITECT.
2. Control datum for survey is that established by OWNER provided survey. CONTRACTOR is to locate and protect survey control and reference points.

C. Pre-Construction Conference
1. OWNER shall schedule a conference immediately after receipt of fully executed Contract Documents prior to project mobilization.
2. Mandatory Attendance: OWNER, ARCHITECT, CONTRACTORS and CONTRACTOR'S Job Superintendent.
3. Optional Attendance: ARCHITECT'S consultants, subcontractors and utility company representatives.
4. OWNER will preside at conference. ARCHITECT shall record meeting minutes and distribute copies through the OWNER.
5. Agenda:
   a. Execution of OWNER-CONTRACTOR Agreement.
   b. Issue Notice to Proceed.
   c. Submission of executed bonds and insurance certificates.
   d. Distribution of Contract Documents.
   e. Submission of list of subcontractors, list of products, schedule of values, project schedule, and submittal schedule.
   f. Designation of responsible personnel representing the parties.
   g. Procedures and processing of field decision, submittals, substitutions, applications for payments, proposal request, change orders and contract closeout procedures.
   h. Scheduling.

D. Job Start Meeting
1. After the OWNER awards the contract, and prior to the commencement of the work, a mandatory Job Start meeting (Pre-Job conference) shall be conducted by the OWNER with the CONTRACTOR and those subcontractors listed in its bid documents.

E. Progress Meetings
1. ARCHITECT will schedule and administer meetings throughout progress of the work at bi-monthly (Every two weeks) intervals or more frequently if needed.
2. ARCHITECT will make arrangements for meetings, prepare agenda and preside at meetings. ARCHITECT will record minutes (Field Reports) and distribute copies.

3. Attendance required: OWNER, ARCHITECT, and CONTRACTOR. CONTRACTOR'S attendance is mandatory.
4. Minimum Agenda Items
    a. Review minutes of previous meetings (Field Reports).
    b. Review work progress.
    c. Field observations, problems, and decisions.
    d. Identification of problems which impede planned progress.
    e. Review of submittals, schedule, and status of submittals.
    f. Review of off-site fabrication and delivery schedules.
    g. Maintenance of progress schedule.
    h. Corrective measures to regain projected schedules.
    i. Planned progress during succeeding work period.
    j. Coordination of projected progress.
    k. Maintenance of quality and work standards.
    l. Effect of proposed changes on progress schedule and coordination.
    m. Other business relating to work.

F. Pre-Installation Conference
1. When required in individual specification sections, convene a pre-installation conference prior to commencing work of the section.
2. Require attendance of parties directly affecting, or affected by, work of the specific section.
3. Notify ARCHITECT through OWNER at least five (5) days in advance of meeting date.
4. CONTRACTOR shall prepare agenda, preside at conference, record minutes and distribute copies within two (2) days after conference to participants
5. Review conditions of installation, preparation and installation procedures and coordination with related work.

1.05 SUBMITTALS
1.06 QUALITY ASSURANCE
1.07 DELIVERY, STORAGE, AND HANDLING
1.08 PROJECT CONDITIONS
1.09 SEQUENCING
1.10 SCHEDULING
1.11 WARRANTY
1.12 SYSTEM STARTUP
1.13 OWNER'S INSTRUCTIONS
1.14 COMMISSIONING
1.15 MAINTENANCE

PART 2 PRODUCTS

NOT APPLICABLE

PART 3 EXECUTION

NOT APPLICABLE

END OF SECTION

SECTION 01 32 16
CONSTRUCTION PROGRESS SCHEDULE

PART 1 GENERAL

1.01 SUMMARY
- A. Section Includes
  - 1. Construction Progress Schedule Procedures
- B. Products Supplied But Not Installed Under This Section
- C. Products Installed But Not Supplied Under This Section
- D. Related Sections
  - A. 01 11 00 Summary of Work
  - B. 01 20 00 Price and Payment Procedures
  - C. 01 25 00 Substitution Procedures
  - D. 01 31 00 Project Management and Coordination
  - E. 01 33 00 Submittal Procedures
  - F. 01 77 00 Closeout Procedures
- E. Allowances
- F. Unit Prices
- G. Measurement Procedures
- H. Payment Procedures
- I. Alternates

1.02 REFERENCES

1.03 DEFINITIONS

1.04 SYSTEM DESCRIPTIONS

1.05 SUBMITTALS
- A. Schedule Submittals
  - 1. CONTRACTOR shall submit Construction Progress Schedules as follows:
    - a. Preliminary Schedule: Submit a preliminary Baseline Schedule within fourteen days after Notice of Award. OWNER will review the Preliminary Schedule and return comments within ten workdays.
    - b. Initial Schedule: Revise the preliminary Schedule and resubmit within ten days, to provide the Project's Baseline Schedule.
    - c. Weekly Schedule Update: While retaining the Baseline Schedule, revise copies to show actual construction progress to date, and submit at scheduled weekly dates, or as otherwise required by the OWNER.
    - d. In the event that the progress of the Work or the sequencing of the activities of the Work differs significantly from that indicated in the Baseline Schedule, the Contractor shall submit a Recovery Schedule to the OWNER, demonstrating the CONTRACTOR'S plan to recover lost time, achieve all contractual milestones, and complete the work within the contract time. Appropriate recovery actions include, but are not limited to, assignments of additional labor or equipment, shift or overtime work, expediting of submittals or deliveries, overlapping of activities, or sequencing changes to increase activity concurrence. An accompanying narrative shall describe the cause of the problems and the

actions planned by the Contractor to recover the schedule. The OWNER will review the Recovery Schedule and provide comments, leading to approval of the schedule.

e. With each Application for Payment.

1.06 QUALITY ASSURANCE

1.07 DELIVERY, STORAGE, AND HANDLING

1.08 PROJECT CONDITIONS

1.09 SEQUENCING

1.10 SCHEDULING

A. Form and Content of Schedules

1. Schedule shall be in the form of a computer-generated Critical Path Method (CPM) or Gantt format showing all construction activities required to complete the Work of the Project within the Contract Time and any OWNER-defined Milestones.
2. CONTRACTOR shall utilize an established standard, centralized, Internet-based scheduling program.
3. Schedule shall include but not be limited to the following:
   a. Complete sequence, with start and completion dates, of each and every activity of construction or element of the construction process.
   b. Phases of construction, with start and completion Milestones, as well as any other Milestones defined by the OWNER.
   c. Critical submittals, including OWNER and ARCHITECT review and approval periods, including 15 workdays for the first submittal (10 days for resubmittal), 21 days when the ARCHITECT'S consultants must review, and 30 days for review of submittals of Structural Steel, Door Hardware, and Hollow Metal Doors and Frames.
   d. Procurement, manufacture and/or fabrication; testing and delivery to the Project site of special long-lead-time material and equipment.
   e. Operational start-up, test and balance, performance testing, and training of operators for systems and equipment; for Substantial Completion and for Final Completion.
   f. Temporary facilities; construction of mock-ups, prototypes and/or samples; punch list; interfaces with Separate Work Contracts; and regulatory agency approvals and permits required for performance of the Work.
   g. Deferred Approvals, allowing a minimum of ninety (90) days for all Deferred Approval items.
   h. OWNER interfaces and Owner-Furnished equipment, either installed by CONTRACTOR (O.F.C.I.) or by OWNER (O.F.O.I.).
   i. Decision dates for products specified by allowances, selection of finishes, and other ARCHITECT- or OWNER-furnished schedules or decisions.
4. Schedule shall be updated periodically as specified to show progress of each activity and all changes since the previous submission, including:
   a. Major changes in scope.

b. Activities modified since previous updating.
c. Revised projections due to changes.
d. Other identifiable changes.

B. Schedule Requirements

1. Schedule shall represent CONTRACTOR'S plan to complete the Work within the Milestones and/or Contract Time. However:
   a. A schedule extending beyond the Milestones and/or Contract Time will not be acceptable.
   b. A schedule indicating Work completed in less than the Milestones and/or Contract Time will not be acceptable. CONTRACTOR shall indicate any available float.
   c. A schedule found unacceptable by the OWNER shall be revised by CONTRACTOR and resubmitted within five (5) days.
2. Schedule shall be in sufficient detail to assure adequate planning and execution of Work, including but not limited to:
   a. Start and completion of all items of Work and their major components, and all designated dates identified as Milestones by OWNER.
   b. Construction activity durations shall be limited to no more than two reporting periods, with exception of fabrication and procurement activities, unless approved otherwise by OWNER. Activity durations shall be total of actual workdays to perform and complete that activity and shall not include consideration of weather impact on the activity.
   c. Activities for procurement, delivery, and installation of equipment, materials and other supplies, including time for submittals, reviews and re-submittals. Include decision dates for selection of finishes.
   d. Time for fabrication and delivery of manufactured products for the Work, showing interdependence of procurement and construction activities.
   e. Identify each activity with applicable CSI Specification Division number, and coordinate with the CONTRACTOR'S approved "Schedule of Values." Include adequate breakdown of activities for the Mechanical and Electrical elements of the work, to enable accurate monitoring and to assure full coordination with OWNER'S operating personnel.
   f. Each activity shall be capable of being cost and resource-loaded with the resulting cost total equal to the Contract Amount
   g. Activities shall include all associated interface activities contained within the Contract Documents including, but not limited to, OWNER maintenance-and-operations activities
   h. Each activity shall be defined to permit reasonable monitoring and evaluation of progress in performance of the Work.
3. Notwithstanding acceptance of the Schedule, failure to identify and/or include any element of the Contract into the Schedule shall not release CONTRACTOR from obligation of completing all required Work in accordance with the Contract Completion Date or any Milestones.

4. Submittal of the Schedule shall constitute CONTRACTOR'S confirmation that the Schedule meets the requirements of the Contract Documents, and the Work will be executed in the sequence indicated in the Schedule.
5. If CONTRACTOR fails to comply with the specified requirements, OWNER reserves the right to engage an independent scheduling consultant and/or provide its own expertise to fulfill these requirements and shall be entitled to recover by assessment all incurred costs for the services from the CONTRACTOR.
6. Submittal of any Schedule is subject to review and acceptance by ARCHITECT and OWNER. OWNER retains the right to withhold progress payments in whole or part until CONTRACTOR submits a Schedule acceptable to OWNER.

1.11 WARRANTY
1.12 SYSTEM STARTUP
1.13 OWNER'S INSTRUCTIONS
1.14 COMMISSIONING
1.15 MAINTENANCE

PART 2 PRODUCTS

NOT APPLICABLE

PART 3 EXECUTION

NOT APPLICABLE

END OF SECTION

SECTION 01 33 00
SUBMITTAL PROCEDURES

PART 1 GENERAL

1.01 SUMMARY
- A. Section Includes
  1. Submittal General Procedures and Minimum Requirements
  2. Submittal Documents

1.02 REFERENCES
1.03 DEFINITIONS
1.04 SYSTEM DESCRIPTIONS
1.05 SUBMITTALS
- A. General Procedures and Minimum Requirements
  1. Submit a Schedule of Submittals
     a. Submit a Schedule of Submittals including a list of submittals organized by CSI specification section number and title, along with required Contractor submission dates and review duration. The schedule shall allow sufficient time for review by the Architect and its consultants. Coordinate and incorporate submittal schedule into the construction progress schedule.
  3. Schedule submissions appropriately to avoid conflict with product lead times, and far enough in advance of scheduled installation dates to provide sufficient review time and possible resubmittals.
  4. Submit Complete and Coordinated Submittals
     a. All submittals will undergo intake review for completeness, coordination, and correct digital formatting prior to initial review.
     b. When a submittal is deemed complete and coordinated for review, the Architect will make (1) one initial review and (1) one follow-up review.
     c. When a submittal is deemed incomplete, Contractor must correct deficiencies and resubmit prior to Architect's initial review or follow-up review.
     d. Unless otherwise specifically authorized by Architect in writing, partial submittals will be deemed incomplete. Transmit all submittals in groups corresponding to the Section of the Specifications or other portion of the Contract Documents.
  5. Submittal Reviews Requiring Additional Professional Services of the Architect
     a. The Owner shall be entitled to reimbursement from the Contractor for any and all cost of such additional services.
     b. Submittal reviews requiring additional professional services of the Architect include, but are not limited to:
        1. Submittal reviews beyond the initial review and follow-up review.
        2. Excessive re-submittal attempts due to incompleteness, mis-coordination, incorrect digital formatting.

3. Expedited submittal reviews (When requested by Contractor)
4. Submittals out-of-sequence or not in conformance with the approved Schedule of Submittals.

6. Contractor Must Identify Deviations from Contract Requirements
   a. If Product Data, Shop Drawing, Sample, Deferred Approval or other submittal required pursuant to the Contract Documents does not conform in every respect with all requirements of the Specifications and other Contract Documents (including, without limitation, any qualification of, modification of, or other deviation from such requirements), such deviation must be expressly identified and explained in detail in the submittal, noted in the accompanying transmittal letter, and identified by "clouding" or "highlighting" on the submittal.
7. All Digital Submission Required
   a. Submit Product Data, Shop Drawings, Deferred Submittals, Calculations, Reports, or other submittal required in a comprehensive digital submittal document. Document shall be formatted as a Portable Document Format (PDF) with file extension (.pdf). Compressed files with extensions (.zip, .rar, .tar) will not be accepted.
   b. Material samples and color sensitive submittals shall be photographed and included in the digital submittal document. Additionally, all material samples and color sensitive submittal content shall be physically transmitted by postal service or other courier service to the Architect's office for review and approval. This process shall be appropriately timed and coordinated by the Contractor for efficient review. Review time shall not commence until all submittal components have been received by the Architect.
   c. All submittals shall be digitally bookmarked by individual components within the PDF (i.e. Product Data, Shop Drawings, Calculations, Color Charts, Photos, etc.) and be coordinated with the Table of Contents.
   d. Submittal file naming shall be sequentially numbered, corresponding to the Section of the Specifications or other portion of the Contract Documents.
      (e.g., 07 92 00 Joint Sealants)
   e. Re-submittals shall include original submission number followed by the resubmittal attempt number
      (e.g., 07 92 00 R1 Joint Sealants)
   f. Example Bookmark format:

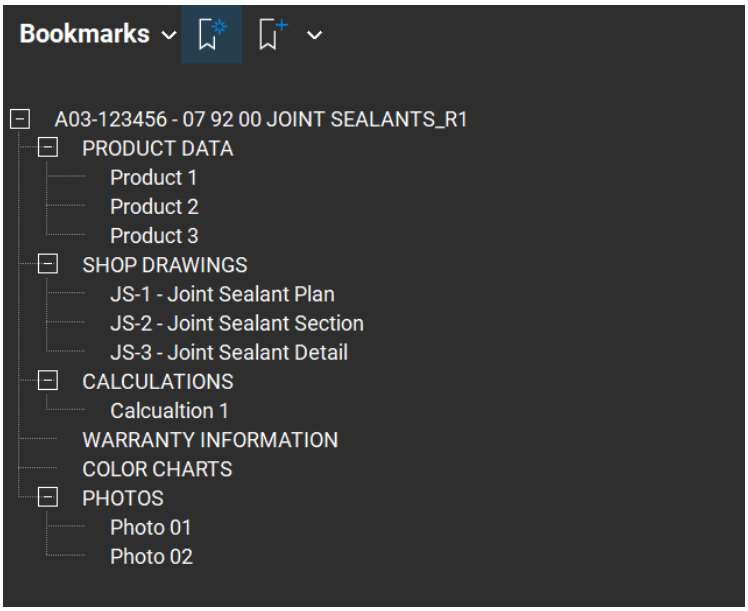

g. All content shall be flattened, all layers deleted, and file size reduced/optimized for efficient transmittal and review.

B. Submittal Documents

1. Transmittal
   a. All submittals must include a transmittal.
2. Cover Sheet
   a. All submittals must include a cover sheet.
   b. Cover sheet shall include the following minimum content:
      1. DSA application number
      2. Project name
      3. Submittal number, title, and version corresponding to the Section of the Specifications or other portion of the Contract Documents.
      4. Submittal date
      5. Contractor name and contact information.
      6. Subcontractor name and contact information for Work described or illustrated in the submittal
   c. Document Format: 8.5-inch x 11-inch – Portrait Orientation
3. Review Stamp Sheet
   a. Architect's Review Stamp
      1. All submittals must include a 4-inch (horizontal) x 5-inch (vertical) blank space for Architect review stamp on submittal stamp sheet.
      2. All submittals must include a 4-inch (horizontal) x 5-inch (vertical) blank space for Architect's Consultant review stamp on submittal stamp sheet.
      3. All submittals must include a 4-inch (horizontal) x 5-inch (vertical) blank space for Architect's Consultant review stamp on submittal stamp sheet.
   b. Contractor's Review and Approval of Submittal Certification

1. All submittals must include a 4-inch (horizontal) x 5-inch (vertical) space for Contractor's certification statement stamp on submittal stamp sheet.
2. Contractor's certification stamp shall state:

PROJECT: HIGHLAND HIGH SCHOOL – 50M POOL AND AQUATICS CENTER
ARCHITECT: PJHM ARCHITECTS, INC.
OWNER: KERN HIGH SCHOOL DISTRICT
CONTRACTOR:

The Contractor has reviewed the submittal and certifies the following:

"CONTRACTOR has reviewed and approved not only the field dimensions but the construction criteria and has also made written notation regarding any information in the (submittal) shop drawings that does not conform to the Contract Documents. This shop drawing has been coordinated with all other shop drawings received to date by CONTRACTOR and this duty of coordination has not been delegated to subcontractors, material suppliers, the Architect, or the engineers on this Project.

SUBMITTAL NO.:

CONTRACTOR REVIEWER'S SIGNATURE:
DATE REVIEWED BY CONTRACTOR:

c. Document Format: 8.5-inch x 11-inch – Portrait Orientation

4. Table of Contents
   a. All submittals shall include a Table of Contents
   b. Table of Contents shall match bookmark format.
   c. Document Format: 8.5-inch x 11-inch – Portrait Orientation
5. Product Data
   a. Identify applicable products, models, options, and other pertinent data. Supplement manufacturer's standard data to provide information unique to the Project.
   b. Submit only one product when multiple acceptable products are listed in the specification section.
   c. Document Format: 8.5-inch x 11-inch – Portrait Orientation
6. Shop Drawings
   a. Submit newly prepared information drawn to accurate scale. Highlight, cloud, or otherwise indicate deviations from the Contract Documents.
   b. DO NOT REPRODUCE CONTRACT DOCUMENTS OR COPY STANDARD INFORMATION AND SUMBIT AS SHOP DRAWINGS.
   c. Standard information prepared without specific reference to the Project will not be approved as Shop Drawings.
   c. When submitting details in Shop Drawings, indicate the corresponding detail and sheet number of the Contract Drawings.
   d. Include fabrication and installation drawings, setting diagrams, schedules, patterns, templates, and similar drawings with the following details:
      1. Dimensions
      2. Identification of products and materials

3. Compliance with specified standards
4. Notation of coordination requirements
5. Notation of dimensions established by field measurement

e. The Architect will review Shop Drawings with reasonable promptness, but only for general conformance to the design concept of the project and with the information given in the Contract Documents. The Architect's favorable review of a separate item shall not indicate acceptance of an assembly in which the item functions.

f. Shop Drawing submittal to the Architect shall be made by Contractor only, submissions by subcontractors or suppliers will not be accepted.

g. The Architect's Shop Drawing review shall not relieve the Contractor of responsibility to for any deviation from the requirements of the Contract Documents unless the Contractor has informed the Architect in writing of such deviation at the time of submission and the Architect provides written acceptance to the specific deviation, nor shall the Architect's favorable review relieve the Contractor from responsibility for errors or omissions in the Shop Drawings.

h. No portion of the work requiring Shop Drawings shall commence until the Shop Drawings have been returned with a favorable review by the Architect.

i. Document Format: 100% scale, minimum 8.5-inch x 11-inch, maximum 30-inch x 42-inch.

7. Samples

a. Submit samples to illustrate functional and aesthetic characteristics of the product with integral parts and attachment devices. Coordinate samples submittals with interfacing work.

b. Submit samples of finishes from the full range of manufacturer's standard colors, textures, and patterns for Architect's selection. Submit custom selections where identified.

c. Submit a minimum of five (5) samples or as specified in individual sections of the specifications. Four (4) submitted samples will be retained by the Architect. Additionally, submit photos of samples and include them in the digital submittal package.

d. Reviewed samples may not be incorporated into the Work.

e. Selection or rejection of samples will be made by the Architect in writing only.

f. Document Format (Photos of Samples for digital component of submittal): 8.5-inch x 11-inch – Portrait Orientation

8. Quality Assurance and Quality Control Submittals

A. Design Data, Test Reports, Certificates, Manufacturers' Instructions, Manufacturers' Field Reports, and Qualification Statements.

1. When specified in individual specification sections, submit manufacturers' instructions for delivery,

storage assembly, installation, start-up, adjusting and finishing.

2. Identify conflicts between manufacturers' instructions and Contract Documents.
3. When specified in individual specification sections, submit manufacturers' certificate to Architect for review.
4. Indicate material or product conforms to or exceeds specified requirements. Submit supporting reference dates, affidavits, and certifications as appropriate.
5. Certificates may be recent or previous test results on material or product but must be acceptable to Architect.
6. Document Format: 8.5-inch x 11-inch – Portrait Orientation

1.06 QUALITY ASSURANCE
1.07 DELIVERY, STORAGE, AND HANDLING
1.08 PROJECT CONDITIONS
1.09 SEQUENCING
1.10 SCHEDULING
1.11 WARRANTY
1.12 SYSTEM STARTUP
1.13 OWNER'S INSTRUCTIONS
1.14 COMMISSIONING
1.15 MAINTENANCE

PART 2 PRODUCTS

NOT APPLICABLE

PART 3 EXECUTION

NOT APPLICABLE

END OF SECTION

SECTION 01 42 19
REFERENCE STANDARDS

PART 1 GENERAL

1.01 SUMMARY

A. Section Includes
   1. Definitions
   2. Specifications Format and Content
   3. Industry Standards
   4. Code and Standards
   5. Governing regulations/authorities

B. Products Supplied But Not Installed Under This Section

C. Products Installed But Not Supplied Under This Section

D. Related Sections

E. Allowances

F. Unit Prices

G. Measurement Procedures

H. Payment Procedures

I. Alternates

1.02 REFERENCES

The standards are referenced in these specifications by acronyms which are listed below with the full name of the sponsoring organization and the address from which copies may be obtained.

AA Aluminum Association
900 19th Street NW, Suite 300
Washington, DC 20006
www.aluminum.org

AABC Associated Air Balance Council
1518 "K" Street, NW, Suite 503
Washington, DC 20005
www.aabchq.com

AAMA American Architectural Manufacturers Association
1827 Walden Office Square, Suite 104
Schaumburg, IL 60173-4268
www.aamanet.org

AASHTO American Association of State Highway and Transportation Officials
444 North Capitol Street, Suite 249
Washington, DC 20001
www.aashto.org

AATCC American Association of Textile Chemists and Colorists
P.O. Box 12215
One Davis Drive
Research Triangle Park, NC 27709-2215
www.aatcc.org

ACI American Concrete Institute
P.O. Box 9094
Farmington Hills, MI 48333-9094
www.aci-int.org

ACPA American Concrete Pipe Association
222 West Las Colinas Blvd., Suite 641
Irving, TX 75039-5423
www.concrete-pipe.org

ADC Air Diffusion Council
104 South Michigan Avenue, Suite 1500
Chicago, IL 60603

AF&PA American Forest and Paper Association
1111 19th Street, NW, Suite 800
Washington, DC 20036
www.afandpa.org

AGA American Gas Association
400 North Capitol Street N.W.
Washington, D.C. 20001
www.aga.com

AHA American Hardboard Association
1210 West Northwest Hwy
Palatine, IL 60067-1897
www.hardboard.org

AHAM Association of Home Appliance Manufacturers
1111 19th Street NW, #402
Washington, DC 20036
www.aham.org

AI Asphalt Institute
Research Park Drive
P.O. Box 14052
Lexington, KY 40512-4052
www.asphaltinstitute.org

AIA The American Institute of Architects
1735 New York Avenue, NW
Washington, DC 20006-5292
www.e-architect.com

AISC American Institute of Steel Construction
One East Wacker Drive, Suite 3100
Chicago, IL 60601-2001
www.aisc.org

AISI American Iron and Steel Institute
P.O. Box 4321
Chestertown, MD 21690
www.steel.org

AITC American Institute of Timber Construction
7012 South Revere Parkway, Suite 140
Englewood, CO 80112
www.aitc-glulam.org

ALCA Associated Landscape Contractors of America
12200 Sunrise Valley Drive, Suite 150
Reston, VA 20191
www.alca.org

ALI Associated Laboratories, Inc.
P.O. Box 152837
1323 Wall Street
Dallas, TX 75315

ALSC American Lumber Standards Committee
P.O. Box 210
Germantown, MD 20875

AMCA Air Movement and Control Association
International, Inc.
30 West University Drive
Arlington Heights, IL 60004-1893
www.amca.org

ANLA American Nursery and Landscape Association
1250 "I" Street, NW, Suite 500
Washington, DC 20005-3922
www.anla.org

ANSI American National Standards Institute
11 West 42nd Street, 13th Floor
New York, NY 10036-8002
www.ansi.org

APA APA-The Engineered Wood Association
2130 Barret Park Drive, Suite 102
Kennesaw, GA 30144-3681
www.apawood.org

APA Architectural Precast Association
6710 Winkler Road, Suite 8
Fort Myers, FL 33919
www.archprecast.org

ARI Air Conditioning and Refrigeration Institute
4301 Fairfax Drive, Suite 425
Arlington, VA 22203
www.ari.org

ARMA Asphalt Roofing Manufacturers Association
1156-15th Street, NW, Suite 900
Washington, DC 20005
www.asphaltroofing.org

ASA Acoustical Society of America
500 Sunnyside Blvd.
Woodbury, NY 11797
www.acoustics.org

ASCE American Society of Civil Engineers
World Headquarters (703) 295-6300
1801 Alexander Bell Drive
Reston, VA 20190-4400
www.asce.org

ASHRAE American Society of Heating, Refrigerating and Air Conditioning Engineers
1791 Tullie Circle, NE
Atlanta, GA 30329-2305
www.ashrae.org

ASLA American Society of Landscape Architects
4401 Connecticut Avenue, NW, Fifth Floor
Washington, DC 20008-2369
www.asla.org

ASME ASME International
Three Park Avenue
New York, NY 10016-5990
www.asme.org

ASPE American Society of Plumbing Engineers
3617 Thousand Oaks Blvd., Suite 210
Westlake, CA 91362-3649

ASQC American Society for Quality
611 East Wisconsin Avenue
Milwaukee, WI 53201-3005
www.asq.org

ASSE American Society of Sanitary Engineers
28901 Clemens Road
Westlake, OH 44145
www.asse-plumbing.org

ASTM American Society for Testing and Materials
100 Barr Harbor Drive
West Conshohocken, PA 19428-2959
www.astm.org

AWCI Association of the Wall and Ceiling Industries - International
307 East Annandale Road, Suite 200
Falls Church, VA 22042-2433
www.awci.org

AWI Architectural Woodwork Institute
1952 Isaac Newton Square
Reston, VA 20190
www.awinet.org

AWPA American Wood-Preservers' Association
3246 Fall Creek Highway, Suite 1900
Granbury, TX 76049-7979

AWS American Welding Society
550 NW LeJeune Road
Miami, FL 33126
www.amweld.org

AWWA American Water Works Association
6666 West Quincy Avenue
Denver, CO 80235
www.awwa.org

BHMA Builders' Hardware Manufacturers Association
355 Lexington Avenue, 17th Floor
New York, NY 10017-6603

BIA Brick Institute of America
11490 Commerce Park Drive
Reston, VA 22091-1525
www.bia.org

CE Corps of Engineers (U.S. Department of the Army)
20 Massachusetts Avenue, NW
Washington, DC 20314
CRD standards are available from:

U.S. Army Corps of Engineers
Waterways Experiment Station
Technical Report Distribution Section
Services Branch, TIC
3909 Halls Ferry Road
Vicksburg, MS 39180-6199

CBM Certified Ballast Manufacturers Association
1422 Euclid Avenue, Suite 402
Cleveland, OH 44115-2094

CCC Carpet Cushion Council
P.O. Box 546
Riverside, CT 06878-0546
www.carpetcushion.org

CDA Copper Development Association
260 Madison Avenue, 16th Floor
New York, NY 10016-2401
www.copper.org

CGA Compressed Gas Association
1725 Jefferson Davis Highway, Suite 1004
Arlington, VA 22202-4102
www.cganet.com

CISCA Ceilings & Interior Systems Construction Association
1500 Lincoln Highway, Suite 202
St. Charles, IL 60174
www.cisca.org

CISPI Cast Iron Soil Pipe Institute
5959 Shallowford Road, Suite 419
Chattanooga, TN 37421
www.cispi.org

CLFMI Chain Link Fence Manufacturers Institute
10015 Old Columbia Road, #B-215
Columbia, MD 21046
www.chainlinkinfo.org

CPSC Consumer Product Safety Commission
East West Towers
4330 East-West Highway
Bethesda, MD 20814

CPPA Corrugated Polyethylene Pipe Association
432 North Superior Street
Toledo, OH 43604

CRA California Redwood Association
405 Enfrente Drive, Suite 200
Novato, CA 94949
www.calredwood.org

CRI Carpet and Rug Institute
310 South Holiday Avenue
Dalton, GA 30722-2048
www.carpet-rug.com

CRSI Concrete Reinforcing Steel Institute
933 North Plum Grove Road
Schaumburg, IL 60173-4758
www.crsi.org

CSSB Cedar Shake and Shingle Bureau
515 116th Avenue, NE, Suite 275
Bellevue, WA 98004-5294
www.cedarbureau.org

CTI Ceramic Tile Institute of America
12061 West Jefferson Blvd.
Culver City, CA 90230-6219
www.ceramic-tile.com

DHI Door and Hardware Institute
14170 Newbrook Drive
Chantilly, VA 20151-2223
www.dhi.org

DIPRA Ductile Iron Pipe Research Association
245 Riverchase Parkway East, Suite O
Birmingham, AL 35244
www.dipra.org

DOC Department of Commerce
5285 Port Royal Road
Springfield, VA 22161

DOT Department of Transportation
400 Seventh Street, SW
Washington, DC 20590

EIMA EIFS Industry Members Association
402 North Fourth Street, Suite 102
Yakima, WA 98901-2470
www.eifsfacts.com

EJMA Expansion Joint Manufacturers Association
25 North Broadway
Tarrytown, NY 10591-3201
www.ejma.org

EPA Environmental Protection Agency
401 "M" Street, SW
Washington, DC 20460
www.epa.gov

FCICA Floor Covering Installation Contractors Association
7439 Millwood Drive
West Bloomfield, MI 48322-1234
www.fcica.com

FM Factory Mutual
1151 Boston-Providence Turnpike
P.O. Box 9102
Norwood, MA 02062-9102
www.fmglobal.com

FCCHR Foundation for Cross-Connection Control and Hydraulic Research
University of Southern California
KAP-200 University Park MC-2531
Los Angeles, CA 90089-25319

FS Federal Standards
(Available from GSA)
470 East L'Enfant Plaza, SW, Suite 8100
Washington, DC 20407

FTI Facing Tile Institute
% Stark Ceramics
P.O. Box 8880
Canton, OH 44711

GA Gypsum Association
810 First Street NE, Suite 510
Washington, DC 20002
www.gypsum.org

GANA Glass Association of North America
3310 SW Harrison Street
Topeka, KS 66611-2279
www.glasswebsite.com/gana

HMA Hardwood Manufacturers Association
400 Penn Center Blvd., Suite 530
Pittsburgh, PA 15235-5605
www.hardwood.org

HPVA Hardwood Plywood and Veneer Association
1825 Michael Farraday Drive
P.O. Box 2789
Reston, VA 20195
www.hpva.org

IEEE Institute of Electrical and Electronic Engineers
445 Hoes Lane (212) 705-7900
Piscataway, NJ 08855-1331
www.standards.ieee.org

IESNA Illuminating Engineering Society of North America
120 Wall Street, 17th Floor
New York, NY 10005-4001
www.iesna.org

ILI Indiana Limestone Institute of America
Stone City Bank Building, Suite 400
Bedford, IN 47421
www.iliai.com

ITS Intertek Testing Services
P.O. Box 2040
3933 US Route 11
Cortland, NY 13045-7902
www.itsglobal.com

KCMA Kitchen Cabinet Manufacturers Association
1899 Preston White Drive
Reston, VA 22091-4326
www.kcma.org

LMA Laminating Materials Association
116 Lawrence Street
Hillsdale, NJ 07642-2730
www.lma.org

MBMA Metal Building Manufacturer's Association
1300 Sumner Avenue
Cleveland, OH 44115-2851
www.mbma.org

MCAA Mechanical Contractors Association of America
1385 Piccard Drive
Rockville, MD 20850-4329
www.mcaa.org

MFMA Maple Flooring Manufacturers Association
60 Revere Drive, Suite 500
Northbrook, IL 60062
www.maplefloor.org

MIA Marble Institute of America
33505 State Street
Farmington, MI 48335
www.marble-institute.com

MIA Masonry Institute of America
2550 Beverly Blvd.
Los Angeles, CA 90057
www.masonryinstitute.org

ML/SFA Metal Lath/Steel Framing Association
(A Division of the NAAMM)
8 South Michigan Avenue, Suite 1000
Chicago, IL 60603

MSS Manufacturers Standardization Society for the Valve and Fittings Industry
127 Park Street, NE
Vienna, VA 22180-4602
www.mss-hq.com

NAA National Arborist Association
P.O. Box 1094 (603) 673-3311
Amherst, NH 03031-1094
www.natlarb.com

NAAMM National Association of Architectural
Metal Manufacturers
8 South Michigan Avenue, Suite 1000
Chicago, IL 60603
www.naamm.org

NAIMA North American Insulation Manufacturers Association
44 Canal Center Plaza, Suite 310
Alexandria, VA 22314
www.naima.org

NAPA National Asphalt Pavement Association
NAPA Building
5100 Forbes Blvd.
Lanham, MD 20706-4413

NBGQA National Building Granite Quarries Association
1220 "L" Street, NW #100-167
Washington, DC 20005
www.nbgqa.com

NCMA National Concrete Masonry Association
2302 Horse Pen Road
Herndon, VA 20171-3499
www.ncma.org

NCPI National Clay Pipe Institute
P.O. Box 759
253-80 Center Street
Lake Geneva, WI 53147
www.ncpi.org

NCRPM National Council on Radiation Protection
and Measurements
7910 Woodmont Ave., Suite 800
Bethesda, MD 20814-3095
www.ncrp.com

NCSPA National Corrugated Steel Pipe Association
1255 23rd Street, NW, Suite 850
Washington, DC 20037
www.ncspa.org

NEBB National Environmental Balancing Bureau
8575 Grovemont Circle
Gaithersburg, MD 20877-4121
www.nebb.org

NECA National Electrical Contractors Association
3 Bethesda Metro Center, Suite 1100
Bethesda, MD 20814-5372
www.necanet.org

NEI National Elevator Industry
185 Bridge Plaza North, Suite 310
Fort Lee, NJ 07024

NEMA National Electrical Manufacturers' Association
1300 North 17th Street, Suite 1847
Rosslyn, VA 22209
www.nema.org

NFPA National Fire Protection Association
One Batterymarch Park
P.O. Box 9101
Quincy, MA 02269-9101
www.nfpa.org

NHLA National Hardwood Lumber Association
P.O. Box 34518
Memphis, TN 38184-0518
www.natlhardwood.org

NIA National Insulation Association
99 Canal Center Plaza, Suite 222
Alexandria, VA 22314
www.insulation.org

NOFMA National Oak Flooring Manufacturers Association
P.O. Box 3009
Memphis, TN 38173-0009
www.nofma.org

NPA National Particleboard Association
18928 Premiere Court
Gaithersburg, MD 20879-1569
www.pbmdf.com

NPCA National Paint and Coatings Association
1500 Rhode Island Avenue, NW
Washington, DC 20005-5597
www.paint.org

NRCA National Roofing Contractors Association
P.O. Box 809261
Chicago, IL 60680-9261
www.roofonline.org

NRMCA National Ready Mixed Concrete Association
900 Spring Street
Silver Spring, MD 20910
www.nrmca.org

NSA National Stone, Sand and Gravel Association
2101 Wilson Blvd.
Arlington, VA 22201
www.nssga.org

NSF NSF International
P.O. Box 130140
Ann Arbor, MI 48113-0140
www.nsf.org

NSSEA National School Supply and Equipment Association
8300 Colesville Road, Suite 250
Silver Spring, MD 20910
www.nssea.org

NTMA National Terrazzo and Mosaic Association
3166 Des Plaines Avenue, Suite 121
Des Plaines, IL 60018
www.ntma.com

NUSIG National Uniform Seismic Installation Guidelines
12 Lahoma Court
Alamo, CA 94526

NWWDA The Window and Door Manufacturer's Door Association
1400 East Touhy Avenue, Suite 470
Des Plaines, IL 60018
www.wdma.org

OSHA Occupational Safety and Health Administration
(U.S. Department of Labor)
200 Constitution Avenue, NW
Washington, DC 20210

PCA Portland Cement Association
5420 Old Orchard Road
Skokie, IL 60077-1083
www.portcement.org

PCI Precast/Prestressed Concrete Institute
175 W. Jackson Blvd.
Chicago, IL 60604
www.pci.org

PDCA Painting and Decorating Contractors of America
3913 Old Lee Highway, Suite 33-B
Fairfax, VA 22030
www.pdca.com

PDI Plumbing and Drainage Institute
45 Bristol Drive (508) 230-3516
South Easton, MA 02375
www.pdionline.org

PEI Porcelain Enamel Institute
4004 Hillsboro Pike, Suite 224-B
Nashville, TN 37215
www.porcelainenamel.com

RFCI Resilient Floor Covering Institute
401 East Jefferson #102
Rockville, MD 20850
www.rfci.com

RIS Redwood Inspection Service
c/o California Redwood Association
405 Enfrente Drive, Suite 200
Novato, CA 94949-7206
www.calredwood.org

SDI Steel Deck Institute
P.O. Box 25
Fox River Grove, IL 60012
www.sdi.org

SDI Steel Door Institute
30200 Detroit Road
Cleveland, OH 44145-1967
www.steeldoor.org

SIGMA Sealed Insulating Glass Manufacturers Association
401 N. Michigan Avenue
Chicago, IL 60611-4267

SJI Steel Joist Institute
3127 Tenth Avenue, North Ext.
Myrtle Beach, SC 29577-6760
www.steeljoist.org

SMA Stucco Manufacturers Association
14006 Ventura Blvd.
Sherman Oaks, CA 91403

SMACNA Sheet Metal and Air Conditioning Contractors
National Association, Inc.
4201 Lafayette Center Drive
Chantilly, VA 20151-1209
www.smacna.org

SPI Society of the Plastics Industry, Inc.
Spray Polyurethane Division
1801 "K" Street, NW, Suite 600K
Washington, DC 20006
www.socplas.org

SPIB Southern Pine Inspection Bureau
4709 Scenic Highway
Pensacola, FL 32504-9094
www.spib.org

SPRI (Formerly: Single Ply Roofing Institute)
200 Reservoir Street, Suite 309A
Needham, MA 02494
www.spri.org

SSPC The Society for Protective Coatings
40 24th Street, Sixth Floor
Pittsburgh, PA 15222-4656
www.sspc.org

SWI Steel Window Institute
c/o Thomas Associates, Inc.
1300 Sumner Avenue
Cleveland, OH 44115-2851
www.steelwindows.com

TCA Tile Council of America
100 Clemson Research Blvd.
Anderson, SC 29625
www.tileusa.com

TPI Truss Plate Institute
583 D'Onofrio Drive, Suite 200
Madison, WI 53719

TPI Turfgrass Producers International
1855-A Hicks Road
Rolling Meadows, IL 60008
www.turfgrasssod.org

UL Underwriters Laboratories, Inc.
333 Pfingston Road
Northbrook, IL 60062
www.ul.com

UNI Uni-Bell PVC Pipe Association
2655 Villa Creek Drive, Suite 155
Dallas, TX 75234
www.uni-bell.org

USDA U.S. Department of Agriculture
14th Street and Independence Avenue, SW
Washington, DC 20250

USPS U.S. Postal Service
475 L'Enfant Plaza, SW
Washington, DC 20260-0010

WA Wallcoverings Association
401 North Michigan Avenue
Chicago, IL 60611-4267
www.wallcoverings.org

WCLIB West Coast Lumber Inspection Bureau
P.O. Box 23145
Portland, OR 97281-3145
www.wclib.org

WCMA Window Covering Manufacturers Association
355 Lexington Avenue, 17th Floor
New York, NY 10017-6603

WIC Woodwork Institute of California
P.O. Box 980247
West Sacramento, CA 95798-0247
www.wicnet.org

WLPDIA Western Lath/Plaster/Drywall Industries Association
8635 Navajo Road
San Diego, CA 92119

WMMPA Wood Molding & Millwork Producers Association
507 First Street
Woodland, CA 95695
www.wmmpa.com

WRI Wire Reinforcement Institute
P.O. Box 450
Findlay, OH 45839-0450
www.wirereinforcementinstitute.org

WWPA Western Wood Products Association - Yeon Building
522 S.W. Fifth Avenue, #500
Portland, OR 97204-2122
www.wwpa.org

1.03 DEFINITIONS

A. Regulations: Includes laws, ordinances, statutes and lawful orders issued by authorities having jurisdiction, as well as rules, conventions and agreements within the construction industry that control performance of the work.

1.04 SYSTEM DESCRIPTIONS

A. Specification Format and Content

1. Specifications are organized into Divisions and Sections based on the Construction Specifications Institute's 2004 Masterformat numbering system.
2. The sections are placed in the Project Manual in numeric sequence; however, this sequence is not complete, and the Table of Contents of the specifications must be consulted to determine the total listing of sections.
3. The section title is not intended to limit the meaning or content of the section, nor is it to be fully descriptive of the requirements specified therein.
4. The organization of the specifications shall not control the division of the work among subcontractors or establish the extent of work to be performed by any trade.
5. Specifications use certain conventions regarding style of language and the intended meaning of certain terms, words and phrases when used in particular situations or circumstances. These conventions are:
    1. Language used in Specifications and other Contract Documents is abbreviated. Words and meanings shall be interpreted as appropriate. Words that are implied, but not stated, shall be interpolated as the sense requires. Singular words shall be interpreted as plural and plural words interpreted as singular where applicable to maintain the context of the Contract Document indicated.
    2. Imperative and streamlined language is generally used in the Specifications. Requirements expressed in the imperative mood are to be performed by the CONTRACTOR. Subjective language is used for clarity to describe responsibilities that must be fulfilled indirectly by the CONTRACTOR, or by others when so noted.
    3. The words "shall be" are implied wherever a colon (:) is used within a sentence or phrase.

B. Codes and Standards

1. Latest edition of pertaining ordinances, laws, rules, codes, regulations, standards and others of public agencies having jurisdiction of the work are intended wherever reference is made in either the singular or plural to Code or Building Code except as otherwise specified, including but not limited to latest edition of those in the following listing.
2. Partial List of Applicable Codes
    a. 2022 California Administrative Code, C.C.R., Title 24, Part 1
    b. 2019 California Building Code, C.C.R., Title 24, Part 2, Volumes 1 and 2 (Based on the 2018 International Building Code)

c. 2019 California Electrical Code,
C.C.R., Title 24, Part 3
(Based on the 2017 NFPA 70, National Electrical Code)
d. 2019 California Mechanical Code,
C.C.R., Title 24, Part 4
(Based on the 2018 Uniform Mechanical Code)
e. 2019 California Plumbing Code,
C.C.R., Title 24, Part 5
(Based on the 2018 Uniform Plumbing Code)
f. 2019 California Energy Code,
C.C.R., Title 24, Part 6
g. 2019 California Historical Building Code,
C.C.R., Title 24, Part 8
h. 2019 California Fire Code,
C.C.R., Title 24, Part 9
(Based on the 2018 International Fire Code)
i. 2019 California Existing Building Code,
C.C.R., Title 24, Part 10
j. 2019 California Green Building Standards Code,
C.C.R, Title 24, Part 11
k. 2019 California Referenced Standards Code,
C.C.R., Title 24, Part 12
l. ASME A17.1 – Safety Code for Elevators & Escalators, 2016 Ed.

3. Partial List of Applicable Standards
a. NFPA 13 Automatic Sprinkler Systems, 2016 Ed.
b. NFPA 14 Standpipe Systems, 2016 Ed.
c. NFPA 17 Dry Chemical Extinguishing Systems, 2017 Ed.
d. NFPA 17A Wet Chemical Extinguishing Systems, 2017 Ed.
e. NFPA 20 Stationary Pumps, 2016 Ed.
f. NFPA 22 Water Tanks For Private Fire Protection, 2013 Ed.
g. NFPA 24 Private Fire Service Mains, 2016 Ed.
h. NFPA 72 National Fire Alarm and Signaling Code, 2016 Ed.
i. NFPA 80 Fire Doors and Other Opening Protectives, 2016 Ed.
j. NFPA 92 Standard for Smoke Control Systems, 2015 Edition
k. NFPA 253 Critical Radiant Flux of Floor Covering Systems, 2015 Ed.
l. NFPA 2001 Clean Agent Fire Extinguishing Systems, 2015 Ed.
m. ICC 300 ICC Standards on Bleachers, Folding and Telescoping Seating and Grand Stands, 2012 Ed.
n. UL 300 Fire Testing of Fire Extinguishing Systems for Protection Of Restaurant Cooking Areas
o. UL 464 Audible Signal Appliances
p. UL 521 Heat Detectors for Fire Protective Signaling Systems

4. A copy of C.C.R. Title 24, 2016 Part 1-5 must be kept on site during construction.
5. All addenda and construction change documents must be signed by the ARCHITECT.

C. Industry Standards
1. Except where Contract Documents include more stringent requirements, applicable construction industry standards shall apply as if bound into the Contract Documents to the extent referenced. Such standards are made part of Contract Documents by reference.

2. Conform to reference standard by date of issue current on date for receiving bids except when a specific date is indicated.
3. Where compliance with two (2) or more standards is specified and where standards may establish different or conflicting requirements for quantities or quality levels, the more stringent, higher quality and greater quantity of work shall apply.
4. The quantity or quality level shown or specified shall be the minimum provided or performed. Indicated numeric values are minimum or maximum, as appropriate, for the context of the requirements.
5. Each entity engaged in construction of the work is required to be familiar with industry standards applicable to its construction activity.
6. Copies of applicable standards are not bound with the Contract Documents. Where copies of standards are needed to perform a required activity, CONTRACTOR shall obtain copies directly from publication source.
7. Trade association's names and titles of general standards are frequently abbreviated. Where such abbreviations are used in the Specifications or other Contract Documents, they shall mean the recognized trade association, standards-generating organization, authority having jurisdiction or other entity applicable to the content of the text provision. Refer to the "Encyclopedia of Associations", published by Gale Research Co., available in most libraries. A partial list is included at the end of this section.
8. Refer to individual specification sections and related drawings for names and abbreviations of trade associations and standards applicable to specific portions of the work.
9. The contractual relationship of the parties to the Contract shall not be altered from the Contract Documents by mention or inference otherwise in any reference document.

1.05 SUBMITTALS
1.06 QUALITY ASSURANCE
1.07 DELIVERY, STORAGE, AND HANDLING
1.08 PROJECT CONDITIONS
1.09 SEQUENCING
1.10 SCHEDULING
1.11 WARRANTY
1.12 SYSTEM STARTUP
1.13 OWNER'S INSTRUCTIONS
1.14 COMMISSIONING
1.15 MAINTENANCE

PART 2 PRODUCTS

NOT APPLICABLE

PART 3 EXECUTION

NOT APPLICABLE

END OF SECTION

SECTION 01 45 00
QUALITY CONTROL

PART 1 GENERAL

1.01 SUMMARY
- A. Section Includes
  1. Quality assurance and control of installation.
  2. Certifications
  3. Field samples.
  4. Mock-up.
  5. Manufacturers' field services and reports.
- B. Products Supplied But Not Installed Under This Section
- C. Products Installed But Not Supplied Under This Section
- D. Related Sections
- E. Allowances
- F. Unit Prices
- G. Measurement Procedures
- H. Payment Procedures
- I. Alternates

1.02 REFERENCES
1.03 DEFINITIONS
1.04 SYSTEM DESCRIPTIONS
1.05 SUBMITTALS
1.06 QUALITY ASSURANCE
- A. Qualifications
  1. Monitor quality control over suppliers, manufacturers, products, services, site conditions and workmanship to produce work of specified quality.
  2. Comply fully with manufacturers' instructions including each step in sequence.
  3. Should manufacturers' instructions conflict with Contract Documents, request clarification from ARCHITECT before proceeding.
  4. Comply with specified standards as a minimum quality for the Work except when more stringent tolerances, codes or specified requirements indicate higher standards or more precise workmanship.
  5. Perform work by persons qualified to produce workmanship of specified quality.
  6. Where experience minimums for workmen, applicators, companies or manufacturers are required in individual sections, written certification and documentation substantiating such minimums shall be submitted and approved by the ARCHITECT, when requested.
  7. Secure products in place with positive anchorage devices designed and sized to withstand stresses, vibration, physical distortion or disfigurement.
- B. Regulatory Requirements
  1. All work pertaining to and all materials supplied for executing and completing this Contract shall comply with provisions specified in

the Contract Documents and with all applicable laws, regulations and ordinances governing Work.

2. All work pertaining to and all materials supplied for executing and completing this Contract shall comply with the provisions outlined in the List of Required Structural Tests & Special Inspection, DSA form 103.
    a. Structural tests and special inspections noted on this form are those that will be performed by the Geotechnical Engineer of Record, Laboratory of Record, or Special Inspector.
    b. The actual complete test and inspection program must be performed as detailed on the DSA approved documents.
    c. The appendix at the bottom of this form identifies work NOT subject to DSA requirements for special inspection or structural testing. The project inspector is responsible for providing inspection of all facets of construction, including but not limited to, special inspections not listed on this form such as structural wood framing, high-load wood diaphragms, cold-formed steel framing, anchorage of non-structural components, etc., per Title 24, Part 2, Chapter 17A.
3. Stop Work and Order to Comply (In accordance with DSA IR A-13)
    a. The Division of the State Architect (DSA) may issue a Request for District/Owner to Stop Work, a Stop Work Order or an Order to Comply, when either of the following occurs:
        1. Construction proceeds without DSA approved construction documents.
        2. Construction proceeds without a DSA certified project inspector specifically approved by DSA for the project.
        3. To correct work that is not in compliance with approved documents and ensure that non-compliant construction is not concealed by subsequent work.
        4. Any other circumstances where DSA determines that construction work is not being performed in accordance with applicable rules and regulations, and would compromise the structural integrity of the building, thereby endangering the public safety.
4. All work pertaining to and all materials supplied for executing and completing this Contract shall comply with the provisions outlined in the Project Inspector and Assistant Inspector Duties and Performance, DSA IR A-8.

C. Certifications
   1. Manufacturers' Field Services and Reports
      a. When specified in individual specification sections, require material or Product suppliers or manufacturers to provide qualified staff personnel to observe site conditions, conditions of surfaces and installation, quality of workmanship, start-up of equipment, test, adjust and balance of equipment and as applicable and to initiate instructions when necessary.
      b. Manufacturer's Representatives shall report observations and site decisions or instructions given to applicators or installers that are supplemental or contrary to manufacturers' written instructions.
      c. Submit report of observation to ARCHITECT for review.

D. Field Samples
   1. Install field samples at the site as required by individual specifications sections for review by ARCHITECT.
   2. Accepted samples represent a quality level for the Work.
   3. Where field sample is specified in individual sections to be removed, clear area after field sample has been accepted by ARCHITECT and is no longer required for reference.

E. Mock-ups
   1. Tests will be performed under provisions identified in this section.
   2. Assemble and erect specified items with specified attachment and anchorage devices, flashings, seals and finishes.
   3. Where mock-up is specified in individual sections to be removed, clear area after mock-up has been accepted by ARCHITECT and is no longer required for reference.

F. Pre-installation Meetings
   1. When specified in individual specification sections, require material or Product suppliers or manufacturers to provide qualified staff personnel to attend meetings regarding installation of specified Work.

1.07 DELIVERY, STORAGE, AND HANDLING
1.08 PROJECT CONDITIONS
1.09 SEQUENCING
1.10 SCHEDULING
1.11 WARRANTY
1.12 SYSTEM STARTUP
1.13 OWNER'S INSTRUCTIONS
1.14 COMMISSIONING
1.15 MAINTENANCE

PART 2 PRODUCTS

NOT APPLICABLE

PART 3 EXECUTION

NOT APPLICABLE

END OF SECTION

SECTION 01 52 00
CONSTRUCTION FACILITIES

PART 1 GENERAL

1.01 SUMMARY
- A. Section Includes
  - 1. Furnishing and Installing:
    - a. Temporary Water
    - b. Temporary Sanitary Facilities
    - c. Fences and Barricades
    - d. Construction Equipment
    - e. Storage
    - f. Temporary Job Office
    - g. Temporary Electrical
    - h. Temporary Lighting
    - i. Temporary Heat
    - j. Temporary Ventilation
    - k. Barriers
    - l. Noise Control
    - m. Pollution Control
    - n. Exterior Enclosures
    - o. Access Roads
    - p. Progress Cleaning
    - q. Fire Protection
- B. Products Supplied But Not Installed Under This Section
- C. Products Installed But Not Supplied Under This Section
- D. Related Sections
- E. Allowances
- F. Unit Prices
- G. Measurement Procedures
- H. Payment Procedures
- I. Alternates

1.02 REFERENCES
1.03 DEFINITIONS
1.04 SYSTEM DESCRIPTIONS
1.05 SUBMITTALS
1.06 QUALITY ASSURANCE
1.07 DELIVERY, STORAGE, AND HANDLING
1.08 PROJECT CONDITIONS
- A. Regulatory Requirements
  - 1. Comply with governing regulations and utility company regulations and recommendations.
  - 2. Comply with pollution and environmental protection regulations for use of water and energy, for discharge of waste and storm drainage from Project Site and for control of dust, air pollution and noise.
  - 3. Temporary construction shall conform to requirements of State, County and Local authorities and underwriters which pertain to operation, health, safety and fire hazard. CONTRACTOR shall furnish and install items necessary for conformance with such

requirements, whether or not called for under the separate divisions of these specifications.

B. Temporary Water
   1. The CONTRACTOR shall provide construction water at the closest existing fire hydrant as approved by the local jurisdiction. CONTRACTOR supplied point of connection shall include applicable temporary meter and backflow devices. CONTRACTORS requiring construction water shall provide all labor and materials (including cut and patch) to distribute.

C. Temporary Sanitary Facilities
   1. CONTRACTOR will provide and maintain the required temporary chemical type toilet facilities and enclosures.
   2. Existing campus facilities shall not be used.

D. Fences and Barricades
   1. After completion of site grading and before start of Work on the project site, CONTRACTOR may install a six (6) foot high temporary chain link fence with locked entrance gates to substantially enclose the entire project site. Any activities scheduled to commence prior to the installation of fencing will be temporarily fenced by CONTRACTOR requiring same.
   2. The CONTRACTOR requiring same shall construct and maintain planking, barricades, lights and warning signs as indicated as required by Local authorities and State safety ordinances and as necessary for the protection of the public.

E. Construction Equipment
   1. CONTRACTOR shall erect, equip and maintain construction equipment in strict accordance with applicable statues, laws, ordinances and regulations of authority having jurisdiction.
   2. CONTRACTOR shall provide, maintain and move upon completion of the Work all temporary rigging, scaffolding, hoisting equipment, rubbish chutes, ramps, stairs, runways, platforms, ladders, railings and other temporary construction as required for all work hereunder.

F. Storage
   1. Operations of the CONTRACTOR, including storage of materials, shall be confined to areas approved by OWNER. CONTRACTOR shall be liable for damage caused by him/her during such use of property of the OWNER or other parties. CONTRACTOR shall save the OWNER along with their respective officers, employees and agents, and the ARCHITECT and his employees, free and harmless from liability of any nature or kind arising from any use, trespass or damage occasioned by his operations on premises of third persons. Storage facilities shall provide protection of products from excessive cold, heat, moisture, humidity or physical abuse as specified in the respective sections for the products stored. Each CONTRACTOR requiring same shall provide their own temporary storage and security for same.
   2. Staging areas will be under the supervision of the CONTRACTOR. Materials shall be placed and relocated as necessary for the progress of the project.

G. Temporary Job Office
   1. Should any CONTRACTOR require office space, the CONTRACTOR requiring office space shall provide.

H. Temporary Electrical
   1. The CONTRACTOR shall provide minimum temporary power as follows:
      a. One (1) 200 amp single phase service.
      b. A 50 amp sub-panel mounted on a post will not be more than 50 feet away from each building pad.
      c. Each sub-panel shall be equipped with two (2) 110 volt receptacles, one (1) 220 volt receptacle and one (1) 50 amp twist-lock pigtail.
   2. All welding will be done with self-contained gas-powered units.

I. Temporary Lighting
   1. The CONTRACTOR shall be responsible for providing and maintaining all temporary lighting as required to safely access and perform their work.

J. Temporary Heat
   1. Temporary heat will be supplied and maintained by the CONTRACTOR.
   2. Do not use permanent equipment for temporary heating purposes unless specifically noted otherwise in the contract documents.

K. Temporary Ventilation
   1. The CONTRACTOR shall ventilate enclosed areas to assist cure of materials, dissipate humidity and to prevent accumulation of dust, fumes, vapors or gases as the above may be generated by them.

L. Barriers
   1. Provide barriers to prevent unauthorized entry to construction areas and to protect existing facilities and adjacent properties from damage from construction operations.
   2. Provide barricades and covered walkways required by governing authorities for public rights-of-way and for public access to existing building.
   3. Provided protection for plant life and trees designated to remain and for soft and hardscape areas adjacent to work, replace damaged materials as directed by the ARCHITECT.
   4. Protect non-owned vehicular traffic, stored materials, site and structures from damage.
   5. Construction workers shall not interact or communicate with students or staff except in emergency or safety related situations. (Post a sign to this effect at entry.)

M. Noise Control
   1. The CONTRACTOR shall ensure that all construction equipment utilized includes noise-reduction features (e.g., mufflers and engine shrouds) that are no less effective than those originally installed by the manufacturer of such equipment.
   2. The CONTRACTOR shall review and be knowledgeable of any CEQA documentation for this project restricting or limiting noise, and implement any and all scheduling or mitigation methods necessary to conform with the CEQA documents. This includes any Mitigated Negative or Negative Declaration instrument the OWNER has produced.
   3. The CONTRACTOR shall review and be knowledgeable of any federal, state or local agency requirements for noise restrictions and adhere to the policies outlined by the applicable laws and codes.

N. Pollution Control
1. Provide methods, means and facilities to prevent contamination of soil, water and atmosphere from discharge of noxious, toxic substances and pollutants produced by construction operations.

O. Exterior Enclosures
1. Provide temporary weather-tight closure of exterior openings to accommodate acceptable working conditions and protection for materials, to allow for temporary heating and maintenance or required ambient temperatures identified in individual specification Sections and to prevent entry of unauthorized persons. Provide access doors with self-closing hardware and locks.

P Access Roads
1. Provide and maintain access to fire hydrants, free of obstructions.
2. Existing on-site roads may be used for construction traffic at the discretion of the OWNER. Any damage to on-site roads shall be repaired at no cost to the OWNER.
3. The CONTRACTOR may not park or drive on concrete walks or in the buildings at any time.

Q. Progress Cleaning
1. Maintain areas free of waste materials, debris and rubbish. Maintain site in a clean and orderly condition.
2. The CONTRACTOR shall remove debris and rubbish from pipe chases, plenums, attics, crawl spaces and other closed or remote spaces prior to the space being enclosed.
3. The CONTRACTOR shall broom and vacuum clean interior areas prior to start of surface finishing and continue cleaning to eliminate dust.
4. The CONTRACTOR shall remove waste materials, debris and rubbish from site periodically and dispose off-site.

R. Fire Protection
1. Fire protection during construction shall be provided in accordance with CFC, Chapter 33.

1.09 SEQUENCING
1.10 SCHEDULING
1.11 WARRANTY
1.12 SYSTEM STARTUP
1.13 OWNER'S INSTRUCTIONS
1.14 COMMISSIONING
1.15 MAINTENANCE

PART 2 PRODUCTS

NOT APPLICABLE

PART 3 EXECUTION

NOT APPLICABLE

END OF SECTION

SECTION 01 57 00
TEMPORARY CONTROLS

PART 1 GENERAL

1.01 SUMMARY
- A. Section Includes
  1. Water Control
  2. Dust Control
  3. Erosion and Sediment Control
  4. Noise Control
  5. Pollution Control
- B. Products Supplied But Not Installed Under This Section
- C. Products Installed But Not Supplied Under This Section
- D. Related Sections
- E. Allowances
- F. Unit Prices
- G. Measurement Procedures
- H. Payment Procedures
- I. Alternates

1.02 REFERENCES
1.03 DEFINITIONS
1.04 SYSTEM DESCRIPTIONS
1.05 SUBMITTALS
1.06 QUALITY ASSURANCE
1.07 DELIVERY, STORAGE, AND HANDLING
1.08 PROJECT CONDITIONS
- A. Project Environmental Requirements
  1. Water Control
     a. Do not permit surface or subsurface water or other liquids to accumulate in or about the premises and vicinity thereof. Should such conditions be encountered or develop, control the water or other liquid and suitably dispose of it by means of temporary pumps, piping, drainage lines, troughs, ditches, dams or other methods as approved by the ARCHITECT and/or the authority having jurisdiction.
  2. Dust Control
     a. Conduct earthwork operations in a manner to prevent windblown dust and dirt from interfering with the progress of the Work, the OWNER'S activities and the existing occupied structures in the areas immediately adjacent as well as adjacent properties.
     b. Periodically water construction areas as required to minimize accumulation of dust and dirt.
     c. Water spray or cover with tarpaulins truck loads of soil to additionally minimize generation of dust and dirt from construction operations.
     d. Prevent dust and dirt from accumulating on walks, roadways, parking areas and from washing into sewer and storm drain lines.
  3. Erosion and Sediment Control

a. Plan and execute construction by methods to control surface drainage from cuts and fills from borrow and waste disposal areas. Prevent erosion and sedimentation.
b. Minimize amount of bare soil exposed at one time.
c. Provide temporary measures such as berms, dikes and drains to prevent water flow over adjacent properties or City rights-of-way.
e. Construct fill and waste areas by selective placement to avoid erosive surface silts or clays.
f. Periodically inspect earthwork to detect evidence of erosion and sedimentation; promptly apply corrective measures.

4. Noise Control
   a. Avoid excessive noise where adjacent operations may be detrimentally affected.
5. Pollution Control
   a. Provide methods, means and facilities to prevent contamination of soil, water and atmosphere from discharge of noxious, toxic substances and pollutants produced by construction operations.
   b. Burning of refuse, debris or other materials will not be permitted on the Site.
   c. Comply with regulatory requirements and anti-pollution ordinances during the course of construction and disposal operations.
6. Removal
   a. Remove all temporary control measures in accordance with regulatory requirements at the completion of construction.

B. Existing Conditions

1.09 SEQUENCING
1.10 SCHEDULING
1.11 WARRANTY
1.12 SYSTEM STARTUP
1.13 OWNER'S INSTRUCTIONS
1.14 COMMISSIONING
1.15 MAINTENANCE

PART 2 PRODUCTS

NOT APPLICABLE

PART 3 EXECUTION

NOT APPLICABLE

END OF SECTION

SECTION 01 60 00
PRODUCT REQUIREMENTS

PART 1 GENERAL

1.01 SUMMARY
- A. Section Includes
  1. Products
  2. Transportation and Handling
  3. Storage and Protection
- B. Products Supplied But Not Installed Under This Section
- C. Products Installed But Not Supplied Under This Section
- D. Related Sections
- E. Allowances
- F. Unit Prices
- G. Measurement Procedures
- H. Payment Procedures
- I. Alternates

1.02 REFERENCES

1.03 DEFINITIONS

1.04 SYSTEM DESCRIPTIONS
- A. Products
  1. Products: Means new material, machinery, components, equipment, fixtures and systems forming the Work. Does not include machinery and equipment used for preparation, fabrication, conveying and erection of the Work. Products may also include existing materials or components required for reuse.
  2. Do not use materials and equipment removed from existing premises, except as specifically permitted by the Contract Documents.
  3. Provide interchangeable components of the same manufacturer for similar components.
  4. The ARCHITECT may reject as non-complying such material and products that do not bear identification satisfactory to the ARCHITECT as to manufacturer, grade, quality and other pertinent.
  5. In event of damage, promptly make replacements and repairs to the approval of the ARCHITECT and at no additional cost to the OWNER.
  6. Additional time required to secure replacements and to make repairs will not be considered by the ARCHITECT to justify an extension in the Contract Time of Completion.

1.05 SUBMITTALS

1.06 QUALITY ASSURANCE

1.07 DELIVERY, STORAGE, AND HANDLING
- A. Packing, Shipping, Handling, and Unloading
  1. Transport and handle products in accordance with manufacturer's instructions.
  2. Provide equipment and personnel to handle products by methods to prevent soiling, disfigurement or damage.

B. Acceptance at Site
   1. Promptly inspect shipments to assure that products comply with requirements, quantities are correct and products are undamaged.

C. Storage and Protection
   1. Store and protect products in accordance with manufacturer's instructions, with seals and labels intact and legible. Store sensitive products in weather-tight, climate controlled enclosures.
   2. For exterior storage of fabricated products, place on sloped supports, above ground and protect as necessary to prevent deterioration or damage to the product.
   3. When approved by the OWNER, provide off-site storage and protection in a bonded warehouse approved by OWNER when site does not permit on-site storage or protection at no cost to the OWNER.
   4. Cover products subject to deterioration with impervious sheet covering. Provide ventilation to avoid condensation.
   5. Store loose granular materials on solid flat surfaces in a well-drained area. Prevent mixing with foreign matter.
   6. Provide equipment and personnel to store products by methods to prevent soiling, disfigurement or damage.
   7. Arrange storage of products to permit access for inspection. Periodically inspect to assure products are undamaged and are maintained under specified conditions.

D. Waste Management and Disposal

1.08 PROJECT CONDITIONS
1.09 SEQUENCING
1.10 SCHEDULING
1.11 WARRANTY
1.12 SYSTEM STARTUP
1.13 OWNER'S INSTRUCTIONS
1.14 COMMISSIONING
1.15 MAINTENANCE

PART 2 PRODUCTS

NOT APPLICABLE

PART 3 EXECUTION

NOT APPLICABLE

END OF SECTION

SECTION 01 74 00
CLEANING AND WASTE MANAGEMENT

PART 1 GENERAL

1.01 SUMMARY
- A. Section Includes
  1. Provide throughout the construction period, maintain the buildings and site in a standard of cleanliness as described in the section.
- B. Products Supplied But Not Installed Under This Section
- C. Products Installed But Not Supplied Under This Section
- D. Related Sections
- E. Allowances
- F. Unit Prices
- G. Measurement Procedures
- H. Payment Procedures
- I. Alternates

1.02 REFERENCES
1.03 DEFINITIONS
1.04 SYSTEM DESCRIPTIONS
- A. Conduct daily inspection, and more often if necessary, to verify that requirements for cleanliness are being met.
- B. In addition to the standards described in this section, comply with pertinent requirements of governmental agencies having jurisdiction.

1.05 SUBMITTALS
1.06 QUALITY ASSURANCE
1.07 DELIVERY, STORAGE, AND HANDLING
1.08 PROJECT CONDITIONS
1.09 SEQUENCING
1.10 SCHEDULING
1.11 WARRANTY
1.12 SYSTEM STARTUP
1.13 OWNER'S INSTRUCTIONS
1.14 COMMISSIONING
1.15 MAINTENANCE

PART 2 PRODUCTS

NOT APPLICABLE

PART 3 EXECUTION

3.01 INSTALLERS
3.02 EXAMINATION
3.03 PREPARATION
3.04 ERECTION
3.05 INSTALLATION
3.06 APPLICATION
3.07 CONSTRUCTION
3.08 REPAIR/RESTORATION
3.09 RE-INSTALLATION

3.10 FIELD QUALITY CONTROL

3.11 ADJUSTING

3.12 CLEANING

A. Cleaning of Materials and Equipment

1. Provide required personnel, equipment, and materials needed to maintain the specified standard of cleanliness.

B. Compatibility

1. Use only the cleaning materials and equipment which are compatible with the surface being cleaned, as recommended by the manufacturer of the material.

C. Progress Cleaning

1. Retain stored items in an orderly arrangement allowing maximum access, not impeding traffic or drainage, and providing required protection of materials.
2. So not allow accumulation of scrap, debris, waste material, and other items not required for construction of this work.
3. At least twice each month, and more often if necessary, completely remove all scrap, debris, and waste material from the job site.
4. Provide adequate storage for all items awaiting removal from the job site, observing requirements for fire protection and protection of the ecology.
5. Site
   a. Clean daily, and more often if necessary, inspect the site and pick up all scrap, debris, and waste material. Remove such items to the place designated for their storage.
   b. Weekly, and more often if necessary, inspect all arrangements of materials stored on the site. Restack, tidy, or otherwise service arrangements as needed.
   c. Maintain the site in a neat and orderly condition at all times.
6. Structures
   a. Weekly, and more often if necessary, inspect the structures and pick up all scrap, debris, and waste material. Remove such items to the place designated for their storage.
   b. Weekly, and more often if necessary, sweep interior spaces clean. "Clean" for the purpose of this subparagraph, shall be interpreted as meaning free from dust and other material capable of being removed by use of reasonable effort and a hand-held broom.
   c. As required preparatory to installation of succeeding materials, clean the structures or pertinent portions hereof to the degree of cleanliness recommended by the manufacturer of the succeeding material, using equipment and materials required to achieve the necessary cleanliness.
   d. Following the installation of finish floor materials, clean the finish floor daily (and more often if necessary) at all times while work is being performed in the space in which finish materials are installed. "Clean" for the purpose of this subparagraph, shall be interpreted as meaning free from foreign material which, in the opinion of the ARCHITECT, may be injurious to the finish floor material.

D. Final Cleaning

1. "Clean" for the purpose of this article, and except as may be specifically provided otherwise, shall be interpreted as meaning the level of cleanliness generally provided by skilled cleaners using commercial quality building maintenance equipment and materials.
2. Prior to completion of the work, remove from the job site all tools, surplus materials, equipment, scrap, debris, and waste.
3. Site
    a. Broom clean paved areas on the site and public paved areas adjacent to the site.
    b. Completely remove resultant debris.
4. Structures
    a. Exterior
        1. Visually inspect exterior surfaces and remove all traces of soil, waste materials, smudges, and other foreign matter.
        2. Remove all traces of splashed materials from adjacent surfaces.
        3. If necessary to achieve a uniform degree of cleanliness, hose down the exterior of the structure.
        4. In the event of stubborn stains not removable with water, the architect may require light sandblasting or other cleaning at no additional cost to the OWNER.
    b. Interior
        1. Visually inspect interior surfaces and remove all traces of soil, waste materials, smudges, and other foreign matter.
        2. Remove all traces of splashed material from adjacent surfaces.
        3. Remove paint droppings, spots, stains, and dirt from finished surfaces.
    c. Glass
        1. Clean inside and outside.
    d. Polished surfaces
        1. To surfaces requiring routine application of buffed polish, apply the polish recommended by the manufacturer of the material being polished.
    e. Schedule final cleaning as approved by the architect to enable the OWNER to accept a completely clean work.

E. Cleaning During Owner's Occupancy
1. Should the OWNER occupy the work or any portion hereof prior to its completion by the contractor and acceptance by the OWNER, responsibilities for interim and final cleaning shall be as determined by the ARCHITECT in accordance with the General Conditions of the contract.

3.13 DEMONSTRATION
3.14 PROTECTION
3.15 SCHEDULES

END OF SECTION

SECTION 01 77 00
CLOSEOUT PROCEDURES

PART 1 GENERAL

1.01 SUMMARY
- A. Section Includes
  1. Closeout procedures
  2. Adjusting
  3. Project record documents
  4. Operation and maintenance data
  5. Warranties and Guarantees
  6. Spare parts and maintenance materials
  7. Instructions to OWNER'S personnel
- B. Products Supplied But Not Installed Under This Section
- C. Products Installed But Not Supplied Under This Section
- D. Related Sections
  1. 01 20 00 Price and Payment Procedures
  2. 01 32 16 Construction Progress Schedule
- E. Allowances
- F. Unit Prices
- G. Measurement Procedures
- H. Payment Procedures
- I. Alternates

1.02 REFERENCES

1.03 DEFINITIONS

1.04 SYSTEM DESCRIPTIONS
- A. Closeout Procedures
  1. Partial Occupancy and Substantial Completion:
     - a. Conform to General Conditions for Closeout Procedures.
     - b. Prepare a list of items to be completed or corrected, aka 'Punch List'. List may be developed by areas, when approved by the ARCHITECT.
     - c. Within a reasonable time after receipt of the list, the ARCHITECT will inspect to determine status of completion.
     - d. Should the ARCHITECT determine that Work is not substantially complete:
       1. The ARCHITECT will promptly notify the OWNER and CONTRACTOR in writing, giving the reasons for his determination.
       2. CONTRACTOR shall remedy the deficiencies and notify the ARCHITECT when Work is ready for re-inspection.
       3. The ARCHITECT will re-inspect the Work.
     - e. When the ARCHITECT concurs that work is substantially complete:
       1. The ARCHITECT will prepare a "Certificate of Substantial Completion" on AIA Form G704, accompanied by the CONTRACTOR'S list of items to be completed or corrected as verified by the ARCHITECT.

2. The ARCHITECT will submit the Certificate to the OWNER and to the CONTRACTOR for their written acceptance of the responsibilities assigned to them in the Certificate.

2. Final Completion:
   a. Prepare and submit a notice that Work is ready for final inspection and acceptance.
   b. Verify the Work is complete.
   c. Certify that:
      1. Work has been inspected by all governing agencies and is in compliance with Contract Documents.
      2. Work has been inspected for compliance with the Contract Documents.
      3. Work has been completed in accordance with the Contract Documents.
      4. Equipment and systems have been tested as required and are operational.
      5. Work is completed and ready for final inspection.
   d. The ARCHITECT will make an inspection to verify status of completion.
   e. Should the ARCHITECT determine the Work is incomplete or defective:
      1. The ARCHITECT will promptly notify the OWNER and CONTRACTOR in writing, listing incomplete or defective work.
      2. CONTRACTOR shall remedy the deficiencies promptly and notify the ARCHITECT when ready for re-inspection.
   f. When the ARCHITECT determines the Work is acceptable under the Contract Documents, he will request the CONTRACTOR to make closeout submittals.
3. Closeout submittals include, but are not necessarily limited to:
   a. Project Record Documents.
   b. Operation and maintenance data for items so listed in pertinent Sections of these Specifications and for other items when so approved by the ARCHITECT.
   c. Warranties and Guarantees.
   d. Keys and keying schedule.
   e. Spare parts, materials, extra stock to be turned over to the OWNER.
   f. Evidence of payment and release of liens.
   g. List of subcontractors, service organizations and principal vendors, including names, addresses and telephone numbers, where they may be contacted for emergency service at all times, including nights, weekends and holidays.
4. Final Payment:
   a. Submit a Final Payment Request, showing all adjustments to the Contract Sum.
   b. Retention will be released no sooner than thirty-five (35) days and not later than sixty (60) days after Notice of Completion has been recorded with the County Recorder's Office.

1.05 SUBMITTALS

A. Product Data
B. Shop Drawings
C. Samples
D. Quality Assurance/Control Submittals
E. Closeout Submittals
   1. Project Record Documents
      a. OWNER will provide one (1) set of drawings and one (1) copy of the Project Manual for use during construction to record changes made during construction manually. CONTRACTORS installing underground utilities shall provide electronic as-built documentation.
      b. Record in concise and neat manner and on a weekly basis all actual revisions to the work:
         1. Changes made on the Drawings, including Clarification Drawings.
         2. Changes made to the Specifications.
         3. Changes made by Addenda.
         4. Changes made by Change Directive.
         5. Change Orders or other authorized Modifications to the Contract.
         6. Revisions made to shop drawings, product data and samples.
      c. Store Record Documents separate from documents used for construction. Replace soiled or illegible documents.
      d. Record information concurrent with construction progress.
      e. Specifications: Legibly mark and record at each Product section description of actual Products installed, including the following:
         1. Manufacturer's name, trade name, product model and number and supplier.
         2. Authorized product substitutions or alternates utilized.
         3. Changes made by Addenda and Modifications.
      f. Record Documents and Shop Drawings: Legibly mark each item to record actual construction including:
         1. Measured depths of foundations in relation to finish first floor datum.
         2. Measured horizontal and vertical locations of underground utilities and appurtenances, referenced to permanent surface improvements. Identify drains and sewers by invert elevation.
         3. Measured locations of internal utilities and appurtenances concealed in construction, referenced to visible and accessible features of the Work. Identify ducts, dampers, valves, access doors and control equipment wiring.
         4. Field changes of dimension and detail.
         5. Details not on original Drawings.
      g. The OWNER will require the preparation of a final reproducible "RECORD SET" of drawings that incorporate all changes made during the construction process to include

incorporation of all change orders, addenda, field orders and "As Installed" conditions noted on the CONTRACTOR prepared record documents. The preparation and printing cost of the "RECORD SET" is part of the contract.

2. Operation And Maintenance Data
   a. Submit three (3) sets prior to final inspection, bound in 8½ x 11 inch text pages, in binders with durable covers, tabbed by specification section and/or other organizing heading.
   b. Deliver to OWNER, itemized and inventoried on transmittal.
3. Warranties and Guarantees
   a. Submit three (3) wet-signed originals separate from Operation and Maintenance data.
   b. Manufacturer's warranties and guarantees notwithstanding, warrant entire Work against defects in materials and workmanship for twelve (12) months from date of Substantial Completion. Warranties and guarantees between CONTRACTOR and manufacturers and CONTRACTOR and suppliers shall not affect warranties or guarantees between CONTRACTOR and OWNER.
   c. Execute and assemble documents from subcontractors, suppliers and manufacturers.
   d. For items of Work delayed beyond date of Substantial Completion, provide updated submittal within ten (10) days after acceptance, listing date of acceptance as start of warranty period.
   e. Deliver to OWNER, itemized and inventoried on transmittal.
4. Underground Wet Utility Video
   a. Upon completion of the storm drain system, the CONTRACTOR shall fully flush the storm drain system and confirm proper functionality. Additionally, the CONTRACTOR shall provide all services necessary to electronically view and record (video) the improvements to the storm drain system. The CONTRACTOR shall turn-over two (2) copies of the documented review (DVD or media of the OWNER'S choice) of the storm drain system at the completion of the project.
   b. Upon completion of the sewer system, the CONTRACTOR shall fully flush the sewer system and confirm proper functionality. Additionally, the CONTRACTOR shall provide all services necessary to electronically view and record (video) the improvements to the sewer system at all interior clean outs and main lines and all exterior building P.O.C./cleanout out to the public system P.O.C. The CONTRACTOR shall turn-over two (2) copies of the documented review (DVD or media of the OWNER'S choice) of the sewer system at the completion of the project.
   c. Deliver to OWNER, itemized and inventoried on transmittal.
5. Instructions to OWNER'S Personnel
   a. Instruct the OWNER'S personnel in proper operation and maintenance of all systems, equipment and similar items, which were provided as part of the work. Provide maintenance and inspection schedules that conform to manufacturer's recommendations.

b. CONTRACTOR shall provide a schedule to the OWNER for approval for each of the instruction periods required.
    1. Organize the instruction sessions into group sizes and schedule the elapsed time for instruction in a manner to provide complete coverage of the subject matter. Video each session and provide OWNER with two (2) copies on DVD.
c. Instruction sessions will be held in a OWNER designated area on the project site and at OWNER'S convenience. Amount of time required for each session shall be as specified in individual sections.
d. Instructors shall be qualified by the product manufacturer in the subject matter presented at each session.
    1. Submit names of instructors and qualifications to the ARCHITECT and OWNER for approval thirty (30) days prior to each scheduled session.
    2. Substitution of instructors will not be permitted without prior approval of ARCHITECT or OWNER.

1.06 QUALITY ASSURANCE
1.07 DELIVERY, STORAGE, AND HANDLING
1.08 PROJECT CONDITIONS
1.09 SEQUENCING
1.10 SCHEDULING
1.11 WARRANTY
1.12 SYSTEM STARTUP
1.13 OWNER'S INSTRUCTIONS
1.14 COMMISSIONING
1.15 MAINTENANCE
    A. Extra Materials
        1. Provide products, spare parts, maintenance and extra materials in quantities specified in individual specification Sections.
    B. Maintenance Service

PART 2 PRODUCTS

NOT APPLICABLE

PART 3 EXECUTION

NOT APPLICABLE

END OF SECTION

SECTION 01 78 30
WARRANTIES AND BONDS

PART 1 GENERAL

1.01 SUMMARY
- A. Section Includes
  1. Preparation and submittal
  2. Time and schedule of submittals
  3. Guarantee Form
  4. Contractor's Certificate Regarding Asbestos Material Form
- B. Products Supplied But Not Installed Under This Section
- C. Products Installed But Not Supplied Under This Section
- D. Related Sections
- E. Allowances
- F. Unit Prices
- G. Measurement Procedures
- H. Payment Procedures
- I. Alternates

1.02 REFERENCES

1.03 DEFINITIONS

1.04 SYSTEM DESCRIPTIONS

1.05 SUBMITTALS
- A. Form of Submittals
  1. Bind in commercial quality, 8½ x 11 inch, three-ring side binders with hardback, cleanable, plastic covers.
  2. Label cover of each binder with typed or printed title WARRANTIES AND BONDS, with title of Project; name, address and telephone number of CONTRACTOR and equipment supplier; and name of responsible principal.
  3. Table of Contents: Neatly typed, in the sequence of the Table of Contents of the Project Manual, with each item identified with the number and title of the specification section in which specified and the name of the product or work item.
  4. Separate each warranty or bond with index tab sheets keyed to the Table of Contents listing. Provide full information, using separate typed sheets as necessary. List subcontractor, supplier and manufacturer, with name, address and telephone number of responsible principal.
- B. Preparation of Submittals
  1. Obtain warranties and bonds, executed in duplicate by responsible Subcontractors, suppliers and manufacturers, within ten (10) days after completion of the applicable item or work. Except for items put into use with OWNER'S permission, leave date of beginning of time of warranty until the Date of Substantial Completion is determined.
  2. Verify that documents are in proper form, contain full information and are notarized.
  3. Co-execute submittals when required.
  4. Retain warranties and bonds until time specified for submittal.

C. Time of Submittals

1. For equipment or component parts of equipment put into service during construction with OWNER'S permission, submit documents within ten (10) days after acceptance.
2. Make other submittals within ten (10) days after Date of Substantial Completion, prior to final Application for Payment.
3. For items of Work when acceptance is delayed beyond Date of Substantial Completion, submit within ten (10) days after acceptance, listing the date of acceptance as the beginning of the warranty period.

1.06 QUALITY ASSURANCE
1.07 DELIVERY, STORAGE, AND HANDLING
1.08 PROJECT CONDITIONS
1.09 SEQUENCING
1.10 SCHEDULING
1.11 WARRANTY
1.12 SYSTEM STARTUP
1.13 OWNER'S INSTRUCTIONS
1.14 COMMISSIONING
1.15 MAINTENANCE

PART 2 PRODUCTS

NOT APPLICABLE

PART 3 EXECUTION

NOT APPLICABLE

GUARANTEE

We hereby guarantee that the

_____, (Item/Equipment)

which we have installed for

_____ (Owner)

at

_____, (Project name)

has been performed in accordance with the requirements of the Contract Documents and that the work as installed will fulfill the requirements of the Contract Documents.

The undersigned agrees to repair or replace any or all of such work that may prove to be defective in workmanship or material together with any other adjacent work which may be displaced in connection with such replacement within a minimum period of ONE (1) YEAR from the date of acceptance of the above-mentioned project by

_____, (Owner) ordinary wear and tear and unusual abuse or neglect excepted.

In the event of the undersigned's failure to comply with the above mentioned conditions within a reasonable period of time, as determined by the OWNER, but not later than ten (10) working days after being notified in writing by the OWNER, the undersigned authorizes the OWNER to proceed to have said defects repaired and made good at the expense of the undersigned, which will pay the costs and charges therefore upon demand.

_____ (Contractor)

_____ (Signed)

_____ (Printed Name)

Representatives to be contacted for service subject to terms of contract.

_____(Name)

_____(Address)

_____(Email)

_____(Phone Number)

CONTRACTOR'S CERTIFICATE
REGARDING ASBESTOS MATERIAL

This form is to be submitted at the time final billing is provided.

> "I certify that all the materials and supplies installed under this contract are free of asbestos-containing materials."

_____(Name of Contract)

_____(Date)

_____(Official Name of CONTRACTOR)

_____(By)

_____(Title)

_____(Signature)

END OF SECTION

SECTION 03 10 00
CONCRETE FORMING AND ACCESSORIES

PART 1 GENERAL

1.01 SUMMARY
- A. Section Includes
  - 1. Formwork for cast-in-place concrete including:
    - a. Earthen Forms
    - b. Wood Forms
    - c. Form Lumber
    - d. Form Accessories
- B. Products Supplied But Not Installed Under This Section
- C. Products Installed But Not Supplied Under This Section
- D. Related Sections
  - 1. 03 30 00 Cast-In-Place Concrete
  - 2. 32 13 13 Concrete Paving
- E. Allowances
- F. Unit Prices
- G. Measurement Procedures
- H. Payment Procedures
- I. Alternates

1.02 REFERENCES
- A. C.C.R., Title 24, Part 2
- B. ACI 318-14 Building Code Requirements for Structural Concrete
- C. ACI 347R-14 Guide to Formwork for Concrete
- D. APA Publication V345 Design/Construction Guide: Concrete Forming
- E. WWPA Technical Guide

1.03 DEFINITIONS
- A. ACI: American Concrete Institute
- B. WWPA: Western Wood Products Association

1.04 SYSTEM DESCRIPTIONS
- A. Design Requirements, Performance Requirements
  - 1. All work shall conform to ACI 318-14 standards.
  - 2. All work shall conform to ACI 347R-14 standards.
  - 3. All work shall conform to structural specifications and details.
  - 4. Forms and falsework shall adequately support live and dead loads, including equipment, concrete drops, pressures of foundations, etc.
  - 5. Design of formwork for structural stability and sufficiency is the sole responsibility of the workers and contractors.

1.05 SUBMITTALS
- A. Product Data
  - 1. Submit manufacturer’s product data for materials and accessories specified.
- B. Shop Drawings
  - 1. Submit detailed structural calculations and drawings approved and signed by a California registered Civil Engineer where the height of the falsework or vertical shoring, as measured from the top of the sills to the soffit of the superstructure exceeds 14 feet, or where

individual horizontal span lengths exceed 16 feet, or where provision for vehicular traffic through falsework or shoring occurs. For all other falsework and shoring submit layout signed by California registered Civil Engineer, manufacturer's authorized representative or a licensed contractor experienced in the usage and erection of falsework and vertical shoring. A copy of the plans and calculations shall be available at the jobsite at all times.

3. Submit detailed drawings indicating locations of forms, construction and expansion joints, embedded items, and accessories.

C. Samples

D. Quality Assurance/Control Submittals

1. Design Data, Test Reports, Certificates, Manufacturers' Instructions, Manufacturers' Field Reports, Qualification Statements

E. Closeout Submittals

1.06 QUALITY ASSURANCE

A. Qualifications

B. Regulatory Requirements

1. C.C.R., Title 24, Part 2, Chapter 19A
2. C.C.R., Title 8, Division 1, Chapter 4

C. Certifications

1. All engineered wood product forms shall bear the APA trademark.

D. Field Samples

E. Mock-ups

F. Pre-installation Meetings

1.07 DELIVERY, STORAGE, AND HANDLING

A. Packing, Shipping, Handling, and Unloading

1. Deliver materials to site with labels clearly identifying product name and manufacturer.
2. Handle tube forms per manufacturer's instructions. Do not drop forms.

B. Acceptance at Site

C. Storage and Protection

1. Store all materials to prevent damage and permit access to materials for inspection and identification.
2. Store tube forms in accordance with manufacturer's instructions

D. Waste Management and Disposal

1.08 PROJECT CONDITIONS

A. Project Environmental Requirements

B. Existing Conditions

1.09 SEQUENCING

1.10 SCHEDULING

1.11 WARRANTY

1.12 SYSTEM STARTUP

1.13 OWNER'S INSTRUCTIONS

1.14 COMMISSIONING

1.15 MAINTENANCE

PART 2 PRODUCTS

2.01 MANUFACTURERS
- A. Tube Forms
  1. Sonoco, 1 North Second Street, Hartsville, South Carolina, 29550
  2. Ceme-Tube, 579 Schommer Dr., Hudson, WI 54016
- A. Releasing Agents
  1. W.R. Meadows, Inc., P.O. Box 338, Hampshire, IL 60140
  2. Nox-Crete, 1444 S 20th St., Omaha, NE 68108

2.02 EXISTING PRODUCTS

2.03 MATERIALS
- A. Concrete Formwork
  1. Earthen Forms
     a. Provide earthen forms as indicated on drawings only for footings where the soil is firm and stable and the concrete will not be exposed, and as approved or directed.
     b. Cut earthen forms square, neat and accurate to size.
     c. Maintain clean bottoms of excavations.
  2. Wood Forms
     a. Provide sound, undamaged, and clean forms per APA standards:
        1. APA Plyform Class 1
        2. B-B Exterior Type
        3. High Density overlaid surface on one side
        4. Not mill oiled
        5. 3/4-inch thick for exposed locations, min. 5/8-inch thick for unexposed locations.
     b. Provide additional treatment of release agent if forms are not fresh.
     c. Form sheathing shall meet the requirements of Voluntary Product Standard, PS 1-09.
  3. Form Lumber
     a. Provide sound, undamaged, lumber for forming, studding, and bracing per WWPA standards:
        1. Species: Douglas Fir-Larch
        2. Grade: No.1 or better
  4. Tube Forms
     a. Provide sound, undamaged, seamless forms in one-piece lengths.
        1. (Sonoco) Sonotube Finish Free
        2. (Chem-Tube) Standard Ceme-Tube

2.04 MANUFACTURED UNITS

2.05 EQUIPMENT

2.06 COMPONENTS

2.07 ACCESSORIES
- A. Form Fasteners
  1. Provide nails, spikes, lag bolts, through-bolts and anchorages required, of sufficient strength, length and character to maintain formwork during pouring operations.
- B. Form Ties

1. Prefabricated rod, flat band, wire, internally threaded disconnecting type, not leaving metal within 1 1/2-inch of concrete surface.

C. Releasing Agents
1. Provide colorless mineral oil type form coating, non-grain raising and non-staining type, ,
a. (W.R. Meadows) Duogard –VOC Compliant Form Release Agent
b. (Nox-Crete) Nox-Crete Form Coating

D. Forming Chamfers and Rustications
1. Provide rigid foam plastic, metal formers, or pre-cut wood profiles in sizes as detailed on drawings.

E. Keyed Construction Joints
1. Provide galvanized steel or extruded plastic tongue and groove type, knock-out holes at 6 inches on centers.

F. Dovetail Anchor Slots
1. Provide minimum 24 gauge galvanized steel foam filled type, with release tape sealed slots, bent tab anchors, securable to formwork.

G. Anchors and Hangers
1. Proved anchors which do not leave exposed metal at surface.

2.08 MIXES
2.09 FABRICATION
2.10 FINISHES
2.11 SOURCE QUALITY CONTROL

PART 3 EXECUTION

3.01 INSTALLERS
3.02 EXAMINATION

A. Site Verification of Conditions
1. Prior to commencing work, examine the work of others and verify that such work has been properly completed and installed to allow for proper installation of all materials and methods required of this section.
2. Examine forms in accordance with C.C.R., Title 24, Part 2, Section **1705A.3, and Table 1705A.3**.
3. Do not begin erection until unacceptable conditions have been corrected.

3.03 PREPARATION
3.04 ERECTION
3.05 INSTALLATION

A. Tube Form Erection
1. Place and brace tube forms in accordance with manufacturer's instructions. Forms must be secured at the base and at the top of the form. Additional mid-point bracing may be required for column heights in excess of 12 feet
2. Erect forms at locations and to elevations as indicated on the Drawings.
3. Erect column forms plumb. Bracing must be adequate to maintain plumb of column form throughout pouring and curing of concrete.
4. Avoid damaging interior surface and coating of forms.

5. Waterproof and reinforce openings cut into forms.
6. Do not use forms that are out-of-round, deformed, damaged, or contain defects that could impair concrete surface.
7. Protect forms from rain and snow if work is delayed and forms have been positioned for placing concrete.
8. Place waterproof sheeting over top of forms to prevent damage to interior surface by rain or snow.
9. Do not allow forms to stand in water or snow before placing concrete.

B. Tube Form Concrete Placement
1. Do not place concrete if column forms are wet.
2. Apply form release coating to interior surface.
3. Place concrete at pour rate in accordance with manufacturer's instructions.
4. Do not touch interior surface of forms with vibrator.
5. Do not vibrate concrete from exterior of forms.

C. Tube Form Removal
1. Remove column forms in accordance with manufacturer's instructions.
2. Adhesion of Concrete to Form increases over time. If removal of the form is required, remove as soon as operations will not damage concrete, a minimum of 24 hours and a maximum of 5 days after placing concrete is recommended.
3. Prevent damage to concrete from form removal.

3.06 APPLICATION

3.07 CONSTRUCTION

A. Forming
1. Earthen forms
a. Foundation concrete may be placed directly into neat excavations provided the foundation trench walls are stable as determined by the Structural Engineer of record, subject to the approval of the Division of the State Architect.
b. The minimum formwork shown on the drawings is mandatory to insure clean excavations immediately prior to and curing the placing of concrete.
c. Trench earthen forms at least two inches wider than footing widths shown on drawings.
d. Construct wood edge strips at each side of trench at top to secure reinforcing and prevent trench from caving. Form sides of footings where earth caves.
e. Tamp form and clean all debris and loose materials in earthen forms before depositing concrete.
2. Design forms and shoring to resist all anticipated loads.
3. Verify accuracy of lines, levels, and centers.
4. Construct formwork and appurtenances to meet design and code requirements. Construct of sound materials, of correct shape and dimensions, mortar tight and of sufficient strength to prevent sagging, buckling, movement and failures. Provide adequate shores of wood or metal to safely carry imposed loads and adjustable to prevent displacements during the work.
5. Plywood shall be installed with horizontal joints level, vertical joints plumb, aligned, and with joints watertight.

6. Back joints by studs or solid blocking, and fill where necessary for smoothness. Reused plywood shall be thoroughly cleaned, damaged edges or surfaces repaired and both sides and edges oiled with colorless form oil. Nail plywood along edges, and to intermediate supports, with common wire nails spaced as necessary to maintain alignment and prevent warping.
7. Set reinforcing accurately and ensure secure placement.
8. Maintain tolerances of ACI 347R-14 guidelines for surface class:
   a. Class A – Use for all concrete surfaces exposed or concealed.
9. Assist in setting and placing block outs and sleeves for materials and products to be embedded in and passing through concrete. Comply with C.C.R., Title 24 , Part 2, Section 1903A and ACI 318 Chapter 6.
10. Provide ports and openings to facilitate inspection and cleaning.
11. Set screeds and establish levels for tops of concrete for finish surfaces. Shape surfaces as indicated on drawings.
12. Screed supports for concrete over waterproof membranes or vapor retarders should be of a cradle, pad, or base type, which will not puncture membrane.
13. Wet formwork prior to placing concrete and keep wet during concrete curing process.

B. Form Removal
1. Do not remove formwork, shoring, and bracing until such time as masonry and concrete has gained sufficient strength to carry its own weight, and construction and design loads, which are liable to be imposed upon it. Verify strengths by compressive strength test results.
2. Loosen forms carefully. Do not wedge pry bars, hammers or other tools against masonry and concrete surfaces.
3. Comply with ACI 318-14, Section 26.11.2.
4. The following are minimum times for forms and shoring to remain in place prior to removal:
   a. Footings and grade beams - 5 days.
   b. Walls and columns - 14 days.
   c. Beam sides - 10 days.
   d. Beam and slab soffits - 14 days.
5. Cut nails and form ties off flush and leave all surfaces smooth and clean.

3.08 REPAIR/RESTORATION
3.09 RE-INSTALLATION
3.10 FIELD QUALITY CONTROL

A. Site Tests, Inspection
1. Inspect wood forms in accordance with C.C.R., Title 24, Part 2, Section **1705A.3, and Table 1705A.3**.

3.11 ADJUSTING
3.12 CLEANING
3.13 DEMONSTRATION
3.14 PROTECTION
3.15 SCHEDULES

END OF SECTION

SECTION 03 20 00
CONCRETE REINFORCING

PART 1 GENERAL

1.01 SUMMARY
- A. Section Includes
  1. Reinforcing bars
  2. Welded Wire Fabric
  3. Chairs and Spacers
  4. Erection of reinforcing
  5. Minimum requirements for concrete coverage
- B. Products Supplied But Not Installed Under This Section
- C. Products Installed But Not Supplied Under This Section
- D. Related Sections
  1. 03 10 00 Concrete Forming and Accessories
  2. 03 30 00 Cast-In-Place Concrete
  3. 04 22 00 Concrete Unit Masonry
  4. 32 13 13 Concrete Paving
- E. Allowances
- F. Unit Prices
- G. Measurement Procedures
- H. Payment Procedures
- I. Alternates

1.02 REFERENCES
- A. C.C.R., Title 24, Part 2, Chapter 19A and applicable sections, 2019 edition
- B. Concrete Reinforcing Steel Institute (CRSI) "Manual of Standard Practice"
- C. ACI 315 Details and Detailing of Concrete Reinforcement
- D. ACI 318 Building Code Requirements for Structural Concrete
- E. ACI SP-66: ACI Detailing Manual
- F. AWS D1.4 Structural Welding Code – Reinforcing Steel
- G. ASTM A1064 Standard Specification for Carbon-Steel Wire and Welded Wire Reinforcement, Plain and Deformed, for Concrete
- H. ASTM A615 Standard Specification for Deformed and Plan Carbon-Steel Bars for Concrete Reinforcement
- I. ASTM A706 Standard Specification for Deformed and Plan Low-Alloy Steel Bars for Concrete Reinforcement

1.03 DEFINITIONS

1.04 SYSTEM DESCRIPTIONS
- A. Design Requirements, Performance Requirements
  1. Perform reinforcing work in strict conformance to the Concrete Reinforcing Steel Institute (CRSI) "Manual of Standard Practice"

1.05 SUBMITTALS
- A. Product Data
- B. Shop Drawings
  1. Submit shop drawings in accordance with ACI 315 Details and Detailing of Concrete Reinforcement.
- C. Samples
- D. Quality Assurance/Control Submittals

1. Design Data, Test Reports, Certificates, Manufacturers' Instructions, Manufacturers' Field Reports, Qualification Statements

E. Closeout Submittals
1. Submit as-built drawings indicating exact locations of reinforcing.

1.06 QUALITY ASSURANCE
A. Qualifications
1. All shop and fielding welding of reinforcing bars shall be performed by welding operators certified by the American Welding Society (AWS).

B. Regulatory Requirements
1. Fabrication and placement of reinforcing shall be in accordance with:
a. C.C.R., Title 24, Part 2, Chapter 19A.
b. Concrete Reinforcing Steel Institute (CRSI) "Manual of Standard Practice", current edition.
c. AWS D1.4 Structural Welding Code – Reinforcing Steel
d. ACI 318 Building Code Requirements for Structural Concrete
e. ACI 315 Details and Detailing of Concrete Reinforcement

C. Certifications
D. Field Samples
E. Mock-ups
F. Pre-installation Meetings

1.07 DELIVERY, STORAGE, AND HANDLING
A. Packing, Shipping, Handling, and Unloading
B. Acceptance at Site
C. Storage and Protection
1. Do not allow reinforcing materials to have direct contact with the ground.
2. Cover materials adequately to prevent rusting and contact with materials or construction injurious to proper bonding.

D. Waste Management and Disposal

1.08 PROJECT CONDITIONS
1.09 SEQUENCING
1.10 SCHEDULING
1.11 WARRANTY
1.12 SYSTEM STARTUP
1.13 OWNER'S INSTRUCTIONS
1.14 COMMISSIONING
1.15 MAINTENANCE

PART 2 PRODUCTS

2.01 MANUFACTURERS
2.02 EXISTING PRODUCTS
2.03 MATERIALS
A. Reinforcing Bars (All bars shall be deformed)
1. All bars except those to be welded
a. ASTM A615, Grade 60 unless otherwise noted.

2. All bars to be welded
   a. ASTM A706, Grade 60 unless otherwise noted.
3. Ties and Stirrups
   a. ASTM A615, Grade 60 unless otherwise noted.
4. Welded Wire Fabric
   a. ASTM A1064

2.04 MANUFACTURED UNITS
2.05 EQUIPMENT
2.06 COMPONENTS
2.07 ACCESSORIES
A. Chairs and Spacers
1. Shall be plastic when resting on exposed surfaces
2. Shall be shaped for strength and support for reinforcing.

2.08 MIXES
2.09 FABRICATION
A. Fabricate in accordance with details shown.
B. Accurately bend, cut and place bars as shown on drawings. Bend bars cold; heating of bars is not permissible. Do not bend or straighten bars in any manner that will injure materials. Details for reinforcement shall comply with ACI 318-14, chapter 25 and section 26.6.3.
C. Welding: All welded reinforcing steel shall be ASTM A706. Perform welding, where shown or approved, by the direct electric arc process in accordance with AWS D1.4 using low hydrogen electrodes as indicated on drawings. Preheat 6 inches each side of joint. Protect joints from drafts during cooling process; accelerated cooling is prohibited. Do not tack weld bars. Clean metal surfaces to be welded of all loose scale and foreign materials. Clean welds each time electrode is changed, and chip burned edges before placing welds. When wire brushed, completed welds must exhibit uniform section, smooth welded metal, feather edges without undercuts or overlays, freedom from porosity and clinkers, and good fusion and penetration into the base metal. Cut out welds or parts of welds found defective, with chisel, and replace with proper welding. Comply with Title 24, Section 1903A.8.
1. Employ only experienced AWS certified welding operators.
2. Prequalification of welds are to be in accordance with code and carbon equivalent of reinforcing not exceeding 0.75.

2.10 FINISHES
2.11 SOURCE QUALITY CONTROL
A. Tests, Inspection
1. Comply with C.C.R., Title 24, Part 2, Sections 1903A and **1910A.2**, 2019 edition
2. Where samples are taken from bundles as delivered from the mill, with the bundles identified as to heat number, and provided the mill analyses accompany the report, then one tensile test and one bend test shall be made from a specimen from each 10 tons or fraction, of each size of reinforcing steel.
3. Where positive identification of the heat number cannot be made or where random samples are to be taken, then one series of tests shall be made from each 2-1/2 tons or fraction, of each size of reinforcing steel.

4. Comply with Title 24, Part 2, C.C.R., **2019** CBC, Chapter **17A** & Section 1910A.2.

B. Verification of Performance

PART 3 EXECUTION

3.01 INSTALLERS

3.02 EXAMINATION

A. Site Verification of Conditions

1. Prior to commencing work of this section, inspect work of others and verify that such work has been properly completed and installed to allow for proper installation of all materials and methods required of this section.

3.03 PREPARATION

3.04 ERECTION

A. Placing

1. Reinforcement shall be placed in accordance with the Concrete Reinforcing Steel Institute (CRSI) "Manual of Standard Practice."
2. Each reinforcing bar shall be wired to a cross bar at a maximum spacing of 24-inches on center. Point ends of wire ties away from forms.
3. Provide all accessories necessary to support reinforcing in positions shown on the drawings. Do not use wood or brick to support reinforcing.
4. Where longitudinal reinforcing bars are placed in 2 or more layers, bars in the upper layers shall be placed directly above bars in the bottom layer.

B. Splices and Laps

1. Only splice reinforcing where shown or noted. Splices at other locations must be approved by the structural engineer of record and DSA.
2. Splices in continuous reinforcement as used in walls, wall footings, etc., shall have a Class 'B' lab (1'-6" min.) and the splices in adjacent bars shall be not less than 5'-0" apart.
3. Vertical wall bars shall be spliced at or near floor lines.
4. Bars may be wired together at splices or laps except for top reinforcing of beams and slabs or where specifically detailed to be separated.
5. Welded wire fabric shall be lapped 12-inches minimum.

C. Embedded Elements

1. All dowels, anchor bolts, and other hardware to be set in concrete shall be tied in place prior to placement of concrete.
2. No wet setting, stabbing, rodding, or other movement of embedding items shall be performed during placement of concrete.

D. Bending

1. Bend reinforcing bars cold.
2. All bends within stirrups, hoops, and cross-ties shall engage a longitudinal bar. Provide No. 4 spacer bar where a longitudinal bar is not specifically detailed.

E. Steel shall be kept clean and free of rust

F. Dowels between footings and walls or columns shall be the same grade, size, and spacing as the main reinforcing unless noted otherwise.

G. All bars shall be marked so their identification can be made when the final in place inspection is made.

3.05 INSTALLATION

3.06 APPLICATION

3.07 CONSTRUCTION

A. Concrete Coverage

1. Maintain minimum concrete cover from face of concrete to edge of all reinforcement as follows:

Condition	Cover
Cast against and permanently exposed to earth	3-inches
Formed and exposed to earth or weather:	
- **#6 bars and larger**	2-inches
- **#5 bars and smaller**	1 ½-inch
Unexposed raised slabs and wall faces:	
- **#11 bars and smaller**	¾-inch
Unexposed columns and beams	1 ½-inch
Slabs on grade:	
- **From bottom of slab**	2-inches
- **From top of slab**	1 ½-inch
Other concrete not exposed to weather earth:	
- **#11 bars and smaller**	¾-inch

3.08 REPAIR/RESTORATION

3.09 RE-INSTALLATION

A. Defective Work

1. The following reinforcing work will be considered defective and may be ordered by Owner to be removed and replaced at no additional expense to Owner.
   a. Bars with kinks or bends not shown on drawings.
   b. Bars injured due to bending or straightening.
   c. Bars heated for bending.
   d. Reinforcement not placed in accordance with drawings or specifications.
   e. Rusty or oily reinforcement.
   f. Re-bent bars.

3.10 FIELD QUALITY CONTROL

A. Site Tests, Inspection

1. Inspection of welding shall be done by a special inspector approved by the Division of State Architect and paid for by the Owner.
2. 48 hours prior to pouring concrete, notify the Architect, Structural Engineer, Project Inspector, and the Division of the State Architect that reinforcing is ready for inspection.
3. Secure approvals by testing laboratory and Inspector of Record (IOR) before concrete operations are commenced.

B. Manufacturers' Field Services

3.11 ADJUSTING

3.12 CLEANING

3.13 DEMONSTRATION
3.14 PROTECTION
3.15 SCHEDULES

END OF SECTION

SECTION 03 24 00
SYNTHETIC FIBER REINFORCEMENT

PART 1 GENERAL

1.01 SUMMARY
- A. Section Includes
  - 1. Monofilament PVA fibers used as admixtures to concrete
- B. Products Supplied But Not Installed Under This Section
- C. Products Installed But Not Supplied Under This Section
- D. Related Sections
  - 1. 32 13 13 Concrete Paving
- E. Allowances
- F. Unit Prices
- G. Measurement Procedures
- H. Payment Procedures
- I. Alternates

1.02 REFERENCES
- A. ASTM C 94 - Standard Specification for Ready-Mixed Concrete.
- B. ASTM C 1116 - Standard Specification for Fiber-Reinforced Concrete and Shotcrete.

1.03 DEFINITIONS

1.04 SYSTEM DESCRIPTIONS

1.05 SUBMITTALS
- A. Product Data
  - 1. Submit manufacturer's product data, application rate, and mixing instructions.
- B. Shop Drawings
- C. Samples
  - 1. Submit manufacturer's sample of synthetic fiber reinforcement
- D. Quality Assurance/Control Submittals
- E. Closeout Submittals

1.06 QUALITY ASSURANCE
- A. Qualifications
  - 1. Synthetic fiber reinforcement manufactured in ISO 9001:2000 certified facility.
  - 2. Minimum 10-year satisfactory performance history of specified synthetic fiber reinforcement.
- B. Regulatory Requirements
  - 1. Synthetic Fiber Reinforcement shall not be a substitute for steel reinforcement where steel reinforcement is specified.
- C. Certifications
- D. Field Samples
- E. Mock-ups
- F. Pre-installation Meetings

1.07 DELIVERY, STORAGE, AND HANDLING
- A. Packing, Shipping, Handling, and Unloading
  1. Deliver synthetic fiber reinforcement in manufacturer's original, unopened, undamaged containers and packaging, with labels clearly identifying product name, unique identification number, code approvals, directions for use, manufacturer, and weight of fibers.
- B. Acceptance at Site
- C. Storage and Protection
  1. Store synthetic fiber reinforcement in clean, dry area indoors in accordance with manufacturer's instructions.
  2. Keep packaging sealed until ready for use.
  3. Protect synthetic fiber reinforcement during handling to prevent contamination.
- D. Waste Management and Disposal

1.08 PROJECT CONDITIONS
1.09 SEQUENCING
1.10 SCHEDULING
1.11 WARRANTY
1.12 SYSTEM STARTUP
1.13 OWNER'S INSTRUCTIONS
1.14 COMMISSIONING
1.15 MAINTENANCE

PART 2 PRODUCTS

2.01 MANUFACTURERS
- A. Nycon , 300 Ben Fairless Drive, Fairless Hills, PA 19030 or equal.

2.02 EXISTING PRODUCTS
2.03 MATERIALS
- A. (Nycon) PVA RSC15

2.04 MANUFACTURED UNITS
2.05 EQUIPMENT
2.06 COMPONENTS
2.07 ACCESSORIES
2.08 MIXES
2.09 FABRICATION
2.10 FINISHES
2.11 SOURCE QUALITY CONTROL

PART 3 EXECUTION

3.01 INSTALLERS
3.02 EXAMINATION
3.03 PREPARATION
3.04 ERECTION
3.05 INSTALLATION
- A. Add synthetic fiber reinforcement to concrete mixture in accordance with manufacturer's instructions and/or recommendations.

3.06 APPLICATION
3.07 CONSTRUCTION
3.08 REPAIR/RESTORATION
3.09 RE-INSTALLATION
3.10 FIELD QUALITY CONTROL
3.11 ADJUSTING
3.12 CLEANING
3.13 DEMONSTRATION
3.14 PROTECTION
3.15 SCHEDULES

END OF SECTION

SECTION 03 30 00
CAST-IN-PLACE CONCRETE

PART 1 GENERAL

1.01 SUMMARY
- A. Section Includes
  1. Cast-In-Place Concrete
- B. Products Supplied But Not Installed Under This Section
- C. Products Installed But Not Supplied Under This Section
- D. Related Sections
  1. 03 10 00 Concrete Forming and Accessories
  2. 03 20 00 Concrete Reinforcing
  3. 03 83 00 Temporary Surface Protection
  4. 07 19 00 Water Repellents
  5. 07 26 16 Below-Grade Vapor Retarders
  6. 07 92 00 Joint Sealants
- E. Allowances
- F. Unit Prices
- G. Measurement Procedures
- H. Payment Procedures
- I. Alternates

1.02 REFERENCES
- A. ACI 117 (Latest Edition): Specification for Tolerances for Concrete Construction and Materials
- B. ACI 211.1 (Latest Edition): Standard Practice for Selecting Proportions for Normal, Heavyweight, and Mass Concrete
- C. ACI 301 (Latest Edition): Specifications for Structural Concrete
- D. ACI 302.1R (Latest Edition): Guide to Concrete Floor and Slab Construction
- E. ACI 302.2R (Latest Edition): Guide for Concrete Slabs that Receive Moisture-Sensitive Flooring Materials
- F. ACI 305.1 (Latest Edition): Specification for Hot Weather Concreting
- G. ACI 306.1 (Latest Edition): Standard Specification for Cold Weather Concreting
- H. ACI 309R (Latest Edition): Guide for Consolidation of Concrete
- I. ACI 318-14: Building Code Requirements for Structural Concrete and Commentary
- J. ACI 360R: Guide to Concrete Floor and Slab Construction
- K. ASTM C 150 – Latest Edition, Standard Specification for Portland Cement
- L. C.C.R., Title 24, Part 2, 2019 CBC Chapters 17A Special Inspections and Tests
- M. C.C.R., Title 24, Part 2, 2019 CBC Chapters 19A Concrete

1.03 DEFINITIONS

1.04 SYSTEM DESCRIPTIONS
- A. Design Requirements, Performance Requirements
  1. Concrete shall meet the design criteria as indicated on the structural drawings.
  2. Concrete shall be mixed, placed, and cured in accordance with Referenced Standards (1.02 References) and project specifications.
  3. The slab-on-grade is not designed to support traffic from cranes or other heavy construction vehicles. Contractor shall repair or replace damaged concrete slabs.

1.05 SUBMITTALS

A. Product Data
   1. Submit manufacturer's product data for admixtures used.
   2. Submit manufacturer's product data for chemical curing compounds used.

B. Shop Drawings
   1. Submit concrete control and construction joint drawings and details.
   2. Submit drawings indicating locations of reinforcing embedded items, and interfacing with other work.

C. Samples
   1. Not required

D. Quality Assurance/Control Submittals
   1. Design Data, Test Reports, Certificates, Manufacturers' Instructions, Manufacturers' Field Reports, Qualification Statements
      a. All mix designs, reports, qualifications shall indicate concrete production facility.
      b. All mix designs, reports, qualifications shall be stamped and signed by a State of California Registered Professional Civil Engineer
      c. Submit the following for each mix design specified:
         1. Statement of Mix Design for Concrete
         2. Indicate cementitious materials, aggregates, and admixtures.
         3. Aggregate gradations.
         4. Compressive Report
         5. Shrinkage Report
         6. Mix Design Qualification
      d. Submit the material standards conformances:
         1. Portland Cement: ASTM C150
         2. Normal Weight Concrete Aggregates: ASTM C33
         3. Light Weight Concrete Aggregates: ASTM C330
         4. Curing Materials: ASTM C171
         5. Water: ASTM C1602

E. Closeout Submittals
   1. Not required.

1.06 QUALITY ASSURANCE

A. Qualifications
   1. Provide adequate numbers of skilled personnel who are thoroughly trained and experienced in the necessary crafts and completely familiar with the specified requirements and methods needed for proper performance of the Work of this Section.

B. Regulatory Requirements
   1. Concrete shall be designed and constructed in accordance with the requirements of ACI 318, CBC Chapter 19A, and project specifications.
   2. Concrete shall be tested and inspected per project specific DSA Statement of Structural Tests and Special Inspections.

C. Certifications

D. Field Samples

1. Provide on-site sample panels approximately 5-feet x 5-feet for each specified finish. Construct additional panels as may be necessary to gain acceptance of finishes desired. After rejection of any panel, remove from site immediately. Accepted and reviewed panel is to be left in place at site for project duration as a project standard.

E. Mock-ups

F. Pre-installation Meetings

1. The pre-installation meeting shall include the following representatives: Owner's Representative, Contractor, Architect, Construction Manager, and any other individuals requested by the Owner or Architect.
2. The pre-installation meeting shall follow ACI 302.1R requirements and recommendations for agenda items outlined in section 1.1.2 Preconstruction meeting.

1.07 DELIVERY, STORAGE, AND HANDLING

A. Packing, Shipping, Handling, and Unloading

1. Not Applicable

B. Acceptance at Site

1. Not Applicable

C. Storage and Protection

1. Storage of materials shall be in accordance with ACI 318, 26.5.1.1

D. Waste Management and Disposal

1. Comply with Local, State, and Federal Laws.

1.08 PROJECT CONDITIONS

1.09 SEQUENCING

1.10 SCHEDULING

1.11 WARRANTY

1.12 SYSTEM STARTUP

1.13 OWNER'S INSTRUCTIONS

1.14 COMMISSIONING

1.15 MAINTENANCE

PART 2 PRODUCTS

2.01 MANUFACTURERS

A. Finishing Materials

1. CTS Cement Manufacturing Corp., 12442 Knott St., Garden Grove, CA 92841, or equal.

2.02 EXISTING PRODUCTS

2.03 MATERIALS

A. Base Course

1. Sand, see Section 31 23 26 Base Course
2. Gravel, see Section 31 23 26 Base Course

B. Reinforcement

1. See Section 03 20 00 Concrete Reinforcing

C. Cement

1. ASTM C150 - Portland Cement, Type II per ACI 318
2. ASTM C150- Portland Cement, Type II (LWC only)

D. Aggregates

1. Aggregates found to be potentially reactive shall not be used.
2. Normal Weight Concrete (NWC): ASTM C33
3. Light Weight Concrete (LWC): ASTM C330

E. Water
1. Water used in mixing, curing, and cleaning concrete shall conform to ASTM C1602.

F. Chemical Admixtures
1. Use as required and only with the written acceptance of the Architect or Structural Engineer.
2. Admixtures shall be in accordance with ACI 318, 26.4.1.4.1
3. Coloring Admixtures shall be in conformance with ASTM C979
   a. Job-proportioning or job-mixing of material for monolithic colored surfaces is not permitted.
   b. Shall be lime-proof and contain no calcium chloride.
   c. Color: As selected by Architect.

G. Concrete Curing Materials
1. Wet Burlap
   a. New burlap: AASHTO M182, ASTM C171
2. Plastic Film, Waterproof Paper, Combination Polyethylene/burlap Sheets
   a. Moisture loss of no more than 0.055 g/cm^3 in 72 hours per ASTM C156.
   b. Waterproof paper shall conform to ASTM C171.
3. Spray-Applied Membrane Curing Compounds
   a. Conform to ASTM C 309, clear, dissipating type.
   b. Moisture loss of no more than 0.55 kg/m^2 in 72 hours at curing compound coverage of 200 sq. ft. per gal. per ASTM C156.
   c. For integrally colored concrete, curing compound shall pigmented to match coloring admixture.

2.04 MANUFACTURED UNITS

2.05 EQUIPMENT

2.06 COMPONENTS

2.07 ACCESSORIES

A. Forming and Accessories
1. See Section 03 10 00 Concrete Forming and Accessories

B. Temporary Surface Protection
1. See Section 03 83 00 Temporary Surface Protection

C. Joint Materials
1. See Section 07 92 00 Joint Sealants

D. Below-Grade Vapor Retarders
1. See Section 07 26 16 Below-Grade Vapor Retarders

E. Below and Above Grade Waterproofing
1. See Section 07 13 26 Self-Adhering Sheet Waterproofing

2.08 MIXES

A. General
1. Concrete Mixing Operations shall conform to ASTM C94
2. Aggregate
   a. Use the largest maximum aggregate size for the conditions. Reference ACI 211.1 (Latest Edition) for aggregate gradation.

3. Water
a. Slab-On-Grade Construction
1. Total water per yard: 285 Lbs.
b. Foundation Construction
1. Total water per yard: 300 Lbs.

B. Compressive Strength
1. Provide concrete mixes which will yield the minimum 28-day compressive strengths required and shown on drawings.

C. Slump
1. Provide concrete mixes which will meet the required slump(s) as indicated on the drawings.

D. Design Mix: Mix design shall be in accordance with se ACI 318, 26.4.3.1

2.09 FABRICATION

2.10 FINISHES

A. Finishing Materials
1. Sacking
a. (CTS) Wunderfixx Concrete Smoothing Compound
2. Water Repellents
a. See Section 07 19 00 Water Repellents

2.11 SOURCE QUALITY CONTROL

A. Tests, Inspection
1. Concrete shall be tested and inspected per project specific DSA Statement of Structural Tests and Special Inspections.

B. Verification of Performance

PART 3 EXECUTION

3.01 INSTALLERS

3.02 EXAMINATION

A. Evaluation and Acceptance of Concrete
1. In accordance with ACI 318, 26.12

3.03 PREPARATION

A. Preparation of equipment and place of deposit
1. In accordance with ACI 318, 26.5, 26.6, 26.11

3.04 ERECTION

3.05 INSTALLATION

A. Below-Grade Vapor Retarders
1. See Section 07 26 16 Below-Grade Vapor Retarders

3.06 APPLICATION

3.07 CONSTRUCTION

A. Formwork
1. In accordance with ACI 318, 26.11
2. See Section 03 10 00 Concrete Forming and Accessories

B. Mixing
1. In accordance with ACI 318, 26.5

C. Conveying
1. In accordance with ACI 318, 26.5

D. Depositing
   1. In accordance with ACI 318, 26.5
E. Curing
   1. In accordance with ACI 318, 26.5.3
   2. Slabs-On-Grade: Ponding or Immersion Method
      a. In accordance with ACI 308.1, Section 4 for a minimum of (168) consecutive hours.
      b. Immediately after concrete placement, prior to commencement of ponding, continuously keep concrete in moist condition, maintain specified concrete temperatures, and protect concrete from mechanical injury for the duration of the initial and final curing periods.
      c. Start ponding on the concrete surface as soon as possible without marring the surface. Ponding shall commence no later than 12 hours after initial placement of concrete.
      c. Replace water lost due to evaporation or leakage at a rate sufficient to maintain the pond. The pond shall maintain a minimum depth of 2-inches of water at all times during the curing process. Any deviations will require a reset of curing time (168 hours).
      d. Protect the concrete slab from damaging mechanical disturbances during the curing period (168 hours). Protect finished surfaces from damage by construction equipment, materials or methods, and from damage caused by application of curing procedures, or by running water.
   3. Suspended Slabs: Moisture Retention Method
      a. In accordance with ACI 308.1,
F. Cold Weather Requirements
   1. In accordance with ACI 318, 26.5.4
G. Hot Weather Requirements
   1. In accordance with ACI 318, 26.5.5
H. Tolerances
   1. Floor Flatness and Levelness

Slabs On Grade (In accordance with ACI 302.1R-15 Table 10.15.3a)

FLOOR FINISH	COMPOSITE FLATNESS (F_F)	COMPOSITE LEVELNESS (F_L)
Epoxy Coatings, Thick Set Tile,	20	15
Carpet	25	20
Thin set Tile, Sheet Flooring, Resinous Flooring, Wood Flooring, Burnished/Polished Concrete	35	25

Suspended Slabs (In accordance with ACI 302.1R-15 Table 10.15.3b)

FLOOR FINISH	COMPOSITE FLATNESS (F_F)	COMPOSITE LEVELNESS (F_L)
Epoxy Coatings, Thick Set Tile	20	N/A
Carpet	25	N/A
Thin set Tile,	30	N/A

Sheet Flooring, Resinous Flooring, Wood Flooring, Burnished/Polished Concrete		

I. Formwork Removal
   1. In accordance with ACI 318, 26.11.2.1
J. Embedment's
   1. In accordance with ACI 318, 20.7, 26.8
K. Construction Joints
   1. In accordance with ACI 318, 26.5.6
   2. In accordance with Construction Documents.
L. Finishing
   1. Sacking
      a. In accordance with manufactures installation procedures.
   2. Water Repellents
      a. See section 07 19 00 Water Repellents

3.08 REPAIR/RESTORATION
3.09 RE-INSTALLATION
3.10 FIELD QUALITY CONTROL
A. Site Tests, Inspection
   1. Concrete shall be tested and inspected per project specific DSA Statement of Structural Tests and Special Inspections.
B. Manufacturers' Field Services

3.11 ADJUSTING
3.12 CLEANING
3.13 DEMONSTRATION
3.14 PROTECTION
A. Temporary Surface Protection
   1. See Section 03 83 00 Temporary Surface Protection

3.15 SCHEDULES
A. Finishing
   1. Sacking
      a. Typical all vertical surfaces exposed to view.
   2. Water Repellents
      a. Typical all walls, all exterior surfaces

END OF SECTION

SECTION 03 35 42
POLISHED CONCRETE FINISHING

PART 1 GENERAL

1.01 SUMMARY
- A. Section Includes
  1. Liquid hardeners to protect horizontal concrete surfaces
  2. Liquid protective sealer to protect horizontal concrete surfaces
  3. Concrete polishing
- B. Products Supplied But Not Installed Under This Section
- C. Products Installed But Not Supplied Under This Section
- D. Related Sections
  1. 03 30 00 Cast-In-Place Concrete
  2. 03 83 00 Temporary Surface Protection
- E. Allowances
- F. Unit Prices
- G. Measurement Procedures
- H. Payment Procedures
- I. Alternates

1.02 REFERENCES
- A. ASTM C 1028 Standard Test Method for Determining the Static Coefficient of Friction of Ceramic Tile and Other Like Surfaces by the Horizontal Dynamometer Pull Meter Method.
- B. ASTM D 3278 Standard Test Method for Flash Point of Liquids by Small Scale Closed Cup Apparatus.
- C. ASTM D 3363-05 Standard Test Method for Film Hardness by Pencil Test.
- D. ASTM E 430 Standard Test Method for Measurement of Gloss of High-Gloss Surfaces by Abridged Goniophotometry.
- E. ASTM-C779, Standard Test Method for Abrasion Resistance of Horizontal Concrete Surfaces
- F. ASTM G23-81, Ultraviolet Light & Water Spray
- G. ASTM C805, Impact Strength
- H. ACI 302. 1R-15, Guide to Concrete Floor and Slab Construction
- I. RILEM Test Method -Test No. 11.4 Measurement of Water Absorption Under Low Pressure.

1.03 DEFINITIONS

1.04 SYSTEM DESCRIPTIONS
- A. Design Requirements, Performance Requirements
  1. Meets or exceeds ADA coefficient of friction of 0.60 for accessible routes and 0.80 for ramps tested in accordance with ASTM C 1028.
  2. Degree of Reflectiveness as per horizontal test area tested in accordance with ASTM E 430.
  3. Degree of Hardness as per horizontal test area tested in accordance with ASTM D 3363-05.
  4. Measure of Water Absorption as per horizontal test area tested in accordance with Rilem Test Method – Test No. 11.4

1.05 SUBMITTALS

A. Product Data
   1. Submit manufacturers' product data sheets on all products to be used for the work.
B. Shop Drawings
C. Samples
D. Quality Assurance/Control Submittals
   1. Design Data, Test Reports, Certificates, Manufacturers' Instructions, Manufacturers' Field Reports, Qualification Statements
      a. Submit written description for protection of surrounding areas, surface preparation, application, and final cleaning.
      b. Submit manufacturers' approved applicators certification, job specific, with installers name and company listed.
      c. Submit manufacturers' recommended installation procedures
      d. Submit manufacturers' technical data sheet indicating descriptive data, curing time, and application requirements.
      e. Submit certified test reports, prepared by an independent testing laboratory, confirming compliance with specified performance criteria.
E. Closeout Submittals

1.06 QUALITY ASSURANCE

A. Qualifications
   1. Applicator shall be a product manufacturers certified installer, thoroughly trained and experienced in the application process.
   2. Applicator shall be familiar with the specified requirements and the methods needed for proper performance of work of this section.
   3. Applicator must have availability of proper equipment to perform work within scope of this project on a timely basis.
   4. Applicator should have successfully performed a minimum of 5 projects of at least 5000 square feet each.
B. Regulatory Requirements
   1. Portland cement concrete paving shall be stable firm, and slip resistant and shall comply with **CBC Section 11B-302.1**
C. Certifications
   1. Product must meet the Scientific Certification System's (SCS) Indoor Advantage Gold certification standard for VOC criteria.
   2. Product must be a registered product with NSF International.
D. Field Samples
E. Mock-ups
   1. Provide a mock-up area that demonstrates surface preparation, control and expansion joints, and concrete floor finish system to establish acceptance by Owner and Architect and set standard for remainder of application;
   2. Sample shall show gloss, slip resistance, and hardness.
   3. Sample area shall be a minimum of 7-feet by 7-feet in area.
   4. Applicator shall not proceed with work until mock-up is approved in writing by Owner and Architect.
   5. Maintain approved test area during construction in an undisturbed condition for judging the completed work.

F. Pre-installation Meetings
   1. Convene a pre-construction meeting before the start of work on new concrete slabs and start of application of concrete finish system. Attendees shall include Owner, Architect, and Installer.

1.07 DELIVERY, STORAGE, AND HANDLING
A. Packing, Shipping, Handling, and Unloading
   1. Deliver materials in original containers, with seals unbroken, bearing manufacturers' labels indicating brand name and directions for storage.
   2. Dispense product from factory sealed containers.
   3. Do not stack pallets more than three high.
B. Acceptance at Site
C. Storage and Protection
   1. Store and handle materials in accordance with manufacturer's written instructions.
   2. Store containers upright in a cool, dry, well, ventilated place, out of the sun with temperature between 40 and 100 degrees F.
   3. Protect from freezing
   4. Store away from all other chemicals and potential sources contamination.
   5. Keep lights, fire, sparks, and heat away from containers.
D. Waste Management and Disposal

1.08 PROJECT CONDITIONS
A. Project Environmental Requirements
   1. Comply with manufacturer's written instructions for substrate temperature and moisture content, ambient temperature and humidity, ventilation, and other conditions affecting topping performance.
   2. Concrete must be cured a minimum of 28 days or as directed by the manufacturer before application of product. Early application of product prior to 28 days is acceptable if approved in writing by manufacturer.
   3. Application of product shall take place prior to installation of equipment, thus providing a complete, uninhibited concrete slab for application.
   4. Do not apply product when surface and air temperature are below 40 degrees F or above 95 degrees F unless otherwise indicated by manufacturer's written instructions.
   5. Do not apply when surface and air temperatures are not expected to remain above 40 degrees F for a minimum of 8 hours after application, unless otherwise indicated by manufacturer's written instructions.
   6. Do not apply under windy conditions such that the concrete surface treatment may be blown to surfaces not intended.
   7. Do not apply to frozen substrate. Allow adequate time for substrate to thaw, if freezing conditions exist before application.
   8. Do not apply earlier than 24 hours after rain or if rain is predicted for a period of 8 hours after application, unless otherwise indicated by manufacturer's written instructions.
   9. Provide ventilation during coating evaporation stage in confined or enclosed areas in accordance with manufacturer's instructions.

B. Existing Conditions

1.09 SEQUENCING
1.10 SCHEDULING
1.11 WARRANTY
1.12 SYSTEM STARTUP
1.13 OWNER'S INSTRUCTIONS
1.14 COMMISSIONING
1.15 MAINTENANCE

PART 2 PRODUCTS

2.01 MANUFACTURERS
A. Prosoco, Inc., 3741 Greenway Circle, Lawrence, KS 66046, or equal.

2.02 EXISTING PRODUCTS
2.03 MATERIALS
A. Sealer/Hardener/Densifier
1. (Prosoco) Consolideck LS
B. Protective Sealer
1. (Prosoco) Consolideck PolishGuard

2.04 MANUFACTURED UNITS
2.05 EQUIPMENT
2.06 COMPONENTS
2.07 ACCESSORIES
A. Surface Cleaner
1. (Prosoco) Consolideck LS Klean

2.08 MIXES
2.09 FABRICATION
2.10 FINISHES
2.11 SOURCE QUALITY CONTROL

PART 3 EXECUTION

3.01 INSTALLERS
3.02 EXAMINATION
A. Site Verification of Conditions
1. Examine substrate for conditions affecting performance of finish. Correct conditions detrimental to timely and proper work. Do not proceed until unsatisfactory conditions are corrected.
2. Verify that concrete slab meets finish and surface profile requirements in Section 03 30 00 Cast-In-Place Concrete.
3. Follow manufacturer's instructions for examination and testing of substrates.
4. Verify by examination that concrete surfaces are acceptable to receive the specified products. Notify the Architect if surfaces are not acceptable to receive the specified products.

3.03 PREPARATION

A. Protection

1. Protect surrounding areas prior to application. If accidentally misapplied to adjacent surfaces, flush with water immediately before material dries.

B. Surface Preparation

1. Prior to application, verify that floor surfaces are free of construction latents.
2. Clean dirt, dust, oil, grease and other contaminants from surfaces that interfere with penetration or performance of specified product.
3. Use appropriate concrete cleaners approved by the concrete surface treatment manufacturer where necessary.
4. Rinse thoroughly using pressure water spray to remove cleaner residues.
5. Allow surfaces to dry completely before application of product.
6. Repair, patch and fill cracks, voids, defects and damaged areas in surface as approved by the Architect. Allow repair materials to cure completely before application of product.
7. Apply specified sealants and caulking and allow complete curing before application of Sealer/Hardener/Densifier product.

3.04 ERECTION

3.05 INSTALLATION

3.06 APPLICATION

A. Sequences of Operation

1. Minimum 28-day concrete cure period.
2. Wash and clean concrete slab with surface cleaner.
3. Polishing.
   a. A concrete grinding machine with planetary heads/counter rotating must be used to the greatest extent possible.
   b. Starting grit level to be determined based on floor levelness and desired amount of coarse aggregate exposure as determined by the approved mock-up.
   c. Perform each pass perpendicular to the other pass North/South/then East/ est. Multiple passes may be needed.
   d. If course aggregate is de-seeded by polishing process, patch/repair damaged area and repolish.
4. Wash and clean concrete slab with surface cleaner.
5. Apply sealer/hardener/densifier to concrete slab at rate of 300 – 400 sq ft per gallon.
6. Polish concrete with a minimum 2000 rpm head speed burnisher.
7. Wash and clean concrete slab with surface cleaner.
8. Apply sealer/hardener/densifier to concrete slab at a rate of 600 – 800 sq ft per gallon.
9. Apply two coats of protective sealer at a rate of 1000 – 1500 sq ft per gallon with microfiber pad.
10. Polish concrete with a minimum 2000 rpm head speed burnisher.

B. Application of Materials

1. Apply products to substrates in accordance with manufacturer's instructions, and application procedures.
2. Apply to clean, dry, and properly prepared surfaces.

3. Clean surface with an auto-scrubber using surface cleaner to remove all surface dust and debris before applying sealer/hardener/densifier.
4. Remove and dispose of all waste from the process, either dry or wet and cleaning in accordance with all environmental regulations.
5. Apply products by 'High Volume Low Pressure' (HVLP) spray using a 0.5 gpm. nozzle.
6. Do not dilute or alter products. Apply as packaged.
7. Do not apply to painted surfaces.
8. Allow applied material to remain on the surface for approximately 10-15 minutes for chemical reaction. If material is spotted on surface move applied material around with a micro fiber pad to achieve uniform coverage. Do not apply additional material.

3.07 CONSTRUCTION
3.08 REPAIR/RESTORATION
3.09 RE-INSTALLATION
3.10 FIELD QUALITY CONTROL
3.11 ADJUSTING
3.12 CLEANING
3.13 DEMONSTRATION
3.14 PROTECTION

A. Close off areas to traffic during floor application and after application, for time period recommended in writing by manufacturer.
B. Polished floors shall be protected with temporary surface protection. See Section 03 83 00 Temporary Surface Protection.

3.15 SCHEDULES

END OF SECTION

SECTION 03 83 00
TEMPORARY SURFACE PROTECTION

PART 1 GENERAL

1.01 SUMMARY
- A. Section Includes
  - 1. Temporary surface protection over the following substrates:
    - a. Floor finishes installed during construction activities.
- B. Products Supplied But Not Installed Under This Section
- C. Products Installed But Not Supplied Under This Section
- D. Related Sections
  - 1. 03 30 00 Cast-In-Place Concrete
- E. Allowances
- F. Unit Prices
- G. Measurement Procedures
- H. Payment Procedures
- I. Alternates

1.02 REFERENCES

1.03 DEFINITIONS

1.04 SYSTEM DESCRIPTIONS

1.05 SUBMITTALS
- A. Product Data
  - 1. Submit manufacturer's data sheets for each product specified
- B. Shop Drawings
- C. Samples
  - 1. Submit representative sample of each product specified
- D. Quality Assurance/Control Submittals
  - 1. Design Data, Test Reports, Certificates, Manufacturers' Instructions, Manufacturers' Field Reports, Qualification Statements
- E. Closeout Submittals

1.06 QUALITY ASSURANCE
- A. Qualifications
  - 1. Provide products manufactured by a company with a minimum of 5 years successful experience manufacturing similar products.
- B. Regulatory Requirements
- C. Certifications
- D. Field Samples
- E. Mock-ups
- F. Pre-installation Meetings

1.07 DELIVERY, STORAGE, AND HANDLING
- A. Packing, Shipping, Handling, and Unloading
  - 1. Deliver, store, and handle materials and products in compliance with manufacturer's instructions and recommendations.
- B. Acceptance at Site
- C. Storage and Protection
  - 1. Protect from damage.
- D. Waste Management and Disposal

1.08 PROJECT CONDITIONS
1.09 SEQUENCING
1.10 SCHEDULING
1.11 WARRANTY
1.12 SYSTEM STARTUP
1.13 OWNER'S INSTRUCTIONS
1.14 COMMISSIONING
1.15 MAINTENANCE

PART 2 PRODUCTS

2.01 MANUFACTURERS
- A. Skudo USA, Inc., 2330 Alberta Dr. Unit 200, Dallas, TX 75229 or Equal.
- B. Ram Board, Inc., 27460 Avenue Scott, Valencia, CA 91355 or Equal.

2.02 EXISTING PRODUCTS
2.03 MATERIALS
- A. Liquid Applied System
  - 1. (Skudo) Skudo HT
- B. Non-Liquid Applied System
  - 1. (Ram Board) Ram Board, 46 Mil Thick

2.04 MANUFACTURED UNITS
2.05 EQUIPMENT
2.06 COMPONENTS
2.07 ACCESSORIES
- A. Liquid Applied System
  - 1. Primer: Skudo water-based base coat
- B. Non-Liquid Applied System
  - 1. Tape: Ram Board Vapor-Cure Tape

2.08 MIXES
2.09 FABRICATION
2.10 FINISHES
2.11 SOURCE QUALITY CONTROL

PART 3 EXECUTION

3.01 INSTALLERS
3.02 EXAMINATION
- A. Site Verification of Conditions
  - 1. Liquid Applied System
    - a. Fresh concrete must have a maximum pH of 10 which, which usually requires a 7-day cure, prior to the application of the product.

3.03 PREPARATION
- A. Protection
- B. Surface Preparation
  - 1. Prepare substrates using the methods recommended by the manufacturer for achieving the best result for the substrate under the project conditions.

2. Do not proceed with installation until substrates have been properly prepared.
3. Commencement of installation constitutes acceptance of conditions.

3.04 ERECTION
3.05 INSTALLATION
3.06 APPLICATION
A. Liquid Applied System
1. Install products in strict conformance with manufacturer's installation recommendations including the following:
a. Apply primer using roller of airless sprayer at a rate of 160 to 200 square feet per gallon.
b. Roll out protection mat over primer while primer is still wet.

3.07 CONSTRUCTION
3.08 REPAIR/RESTORATION
3.09 RE-INSTALLATION
3.10 FIELD QUALITY CONTROL
3.11 ADJUSTING
3.12 CLEANING
3.13 DEMONSTRATION
3.14 PROTECTION
3.15 SCHEDULES

END OF SECTION

SECTION 04 22 00
CONCRETE UNIT MASONRY

PART 1 GENERAL

1.01 SUMMARY

A. Section Includes
   1. Concrete Masonry Units (CMU)
   2. Mortar
   3. Grout
   4. Admixtures
   5. Reinforcement and Metal Accessories
   6. Flashing Materials (Embedded)
   7. Miscellaneous Masonry Accessories

B. Products Supplied But Not Installed Under This Section

C. Products Installed But Not Supplied Under This Section

D. Related Sections
   1. 07 19 00 Water Repellents
   2. 09 91 13 Exterior Painting

E. Allowances

F. Unit Prices

G. Measurement Procedures

H. Payment Procedures

I. Alternates

1.02 REFERENCES

A. TMS 602-16: Specification for Masonry Structures

B. TMS 402-16: Building Code Requirements for Masonry Structures and Commentary.

C. ASTM A36/A36M: Standard Specification for Carbon Structural Steel

D. ASTM A82/A82M: Standard Specification for Steel Wire, Plain, for Concrete Reinforcement

E. ASTM A153/A153M: Standard Specification for Zinc Coating (Hot-Dip) on Iron and Steel Hardware

F. ASTM A185/A185M: Standard Specification for Steel Welded Wire Reinforcement, Plain, for Concrete

G. ASTM A307: Specification for Carbon Steel Bolts and Studs, 60,000 psi Tensile Strength

H. ASTM A615/A615M: Standard Specification for Deformed and Plain Carbon-Steel Bars for Concrete Reinforcement

I. ASTM A641/A641M: Standard Specification for Zinc-Coated (Galvanized) Carbon Steel Wire

J. ASTM A653/A653M: Standard Specification for Steel Sheet, Zinc-Coated (Galvanized) or Zinc-Iron Alloy-Coated (Galvanealed) by the Hot-Dip Process

K. ASTM A884/A884M: Standard Specification for Epoxy-Coated Steel Wire and Welded Wire Fabric for Reinforcement

L. ASTM A899 Standard Specification for Steel Wire Epoxy-Coated

M. ASTM A951/A951M: Standard Specification for Masonry Joint Reinforcement

N. ASTM A1008/A1008M: Standard Specification for Steel, Sheet, Cold-Rolled, Carbon, Structural, High-Strength Low-Alloy, High-Strength Low-Alloy with Improved Formability, Solution Hardened, and Bake Hardenable.

O. ASTM C90 Standard Specification for Loadbearing Concrete Masonry Units

P. ASTM C140/C140M: Standard Test Method for Sampling and Testing Concrete Masonry Units.
Q. ASTM C150/C150M: Standard Specification for Portland Cement
R. ASTM C270: Standard Specification for Mortar for Unit Masonry
S. ASTM C476: Standard Specification for Grout for Unit Masonry
T. ASTM C1019: Standard Test Method for Sampling and Testing Grout
U. ASTM C1586: Standard Guide for Quality Assurance of Mortars
V. ASTM C1714/C1714M: Standard Specification for Preblended Dry Mortar Mix for Unit Masonry.
W. ASTM D2000: Classification System for Rubber Products in Automotive Applications.
X. ASTM D2287: Standard Specification for Nonrigid Vinyl Chloride Polymer and Copolymer Molding and Extrusion Compounds

1.03 DEFINITIONS

1.04 SYSTEM DESCRIPTIONS

A. Design Requirements, Performance Requirements
1. Provide materials to achieve the net compressive strength of concrete unit masonry equal to or greater than 2000 psi f'm or as indicated on structural drawings. Structural drawings take precedence.
2. Concrete unit masonry shall conform to ASTM C90 medium weight.

1.05 SUBMITTALS

A. General
B. Product Data
1. Submit manufacturer's product data sheet for each product used.
C. Shop Drawings
D. Samples
1. Submit samples for verification for the following:
a. Each type and color of concrete masonry units used.
a. Each type and color of mortar used.
E. Quality Assurance/Control Submittals
1. Design Data, Test Reports, Certificates, Manufacturers' Instructions, Manufacturers' Field Reports, Qualification Statements
a. Submit Mix Design Test Reports for the following:
1. Preblended Mortar: In conformance with ASTM C270
2. Conventional Grout: In conformance with ASTM C476
b. Submit material certificates for each of the following certifying compliance:
1. Concrete masonry units
2. Steel reinforcing bars
3. Anchor, ties, fasteners, and metal accessories.
4. Preformed control joint gaskets.
F. Closeout Submittals

1.06 QUALITY ASSURANCE

A. Qualifications
1. Preconstruction Testing
a. Owner will select a qualified independent testing agency to perform preconstruction testing indicated below.

b. The compressive strength of masonry shall be determined based on the strength of the unit and type of mortar specified (Unit Strength Method) per **CBC 2105A and Section 1.4B.2.b of TMS 602-16/ACI 530.1-16/ASCE 6-16.**
c. Concrete Masonry Units: Test per ASTM C140.
d. Grout: Test per ASTM C1019

B. Regulatory Requirements
C. Certifications
D. Field Samples
E. Mock-ups
1. Construct and approximate 5'-4" wide by 5'-4" high panel for representation of completed masonry, joint tooling, design details, and workmanship. All specified units shall be incorporated into mock-up.
2. Mock-up shall be removable and not part of the final product.
3. Mock-up approval by Architect shall be required prior to commencement of Concrete Unit Masonry Work.

F. Pre-installation Meetings
1. Conduct conference at project site prior to start of Work in this section.

1.07 DELIVERY, STORAGE, AND HANDLING
A. Packing, Shipping, Handling, and Unloading
B. Acceptance at Site
C. Storage and Protection
1. All materials of this section shall be protected to maintain quality and physical requirements.
2. All masonry units shall be stored on the jobsite so that they are protected from rain, stored off-ground and kept clean from contamination. Prevent units from being otherwise wetted.
3. Store preblended mixes in manufacturer's original, unopened, undamaged containers with identification labels intact, covered and protected from weather.

D. Waste Management and Disposal

1.08 PROJECT CONDITIONS
A. Project Environmental Requirements
1. General
a. Cover top of unfinished masonry work to protect it from weather.
2. Cold-Weather Procedures
a. When ambient temperatures falls below 40 degrees F or the temperature of masonry units is below 40 degrees F, wet or frozen units shall not be laid.
b. Implement cold weather construction procedures in accordance with TMS 602/ACI 530.1/ASCE 6 Article 1.8C.
3. Hot-Weather Procedures
a. When ambient temperatures exceeds 100 degrees F, or exceeds 90 degrees F with a wind velocity greater than 8 mph, implement hot weather construction procedures in accordance with TMS 602/ACI 530.1/ASCE 6 Article 1.8D.

B. Existing Conditions

1.09 SEQUENCING
1.10 SCHEDULING
1.11 WARRANTY
1.12 SYSTEM STARTUP
1.13 OWNER'S INSTRUCTIONS
1.14 COMMISSIONING
1.15 MAINTENANCE

PART 2 PRODUCTS

2.01 MANUFACTURERS
- A. Concrete Masonry Units
  1. ORCO Block & Hardscape, 11100 Beach Blvd., Stanton, CA 90680, or Equal.
  2. Angelus Block Company Inc., 14515 Whittram St., Fontana, CA 92335.
- B. Preblended Mortar and Grout
  1. ORCO Blended Products, 27347 Third Street, Highland, CA 92346, or Equal.
  2. E-Z Mix, Inc., 3355 Industrial Drive, Bloomington, CA 92316
- C. Admixtures
  1. R-Crete Inc., P.O. Box 80286, Rancho Santa Margarita, CA 92679, or Equal.
  2. E-Z Mix, Inc., 3355 Industrial Drive, Bloomington, CA 92316
  3. Sika Corporation, 201 Polito Ave., NJ 07071

2.02 EXISTING PRODUCTS
2.03 MATERIALS
- A. Preblended Mortar: ASTM C270, Type M
  1. (ORCO) OPB Masonry Mortar
     a. Color: As selected by Architect from standard and special-order selections.
  2. (E-Z Mix) Spec Mix Masonry Mortar
- B. Grout: ASTM C476
  1. (ORCO) OPB Masonry Grout 70/30 3000 psi
  2. (E-Z Mix) PMP Spec Concrete 3000
     a. Aggregate proportions shall comply with admixture manufacturer requirements.
     b. Grout shall contain an expanding, water reducing, retarding admixture listed in paragraph D.
     c. Grout shall not contain fly ash.
     d. Grout slump shall be designed to 8" maximum, or less as required by admixture manufacturer.
- C. Water: Potable
- D. Admixtures: Grout shall contain grout-aid as specified below. The use of any other admixture shall not be permitted unless approved by the Structural Engineer of Record and DSA.
  1. (R-Crete) R-Grout Aid (GA213)
  2. (E-Z Mix) Pre-Mix Products Grout Additive
  3. (Sika) Grout-Aid
- E. Reinforcement and Metal Accessories
  1. General

a. Metal reinforcement and accessories shall conform to TMS 602/ACI 530.1/ASCE 6 Article 2.4

2. Steel Reinforcing Bars: ASTM A615/A615M, Grade 60
3. Masonry Joint Reinforcement: ASTM A951/A951M
   a. Maximum spacing of cross wires in ladder-type and points of connection of cross wires of truss-type joint reinforcement shall be 16-inches.
4. Anchors, Ties, and Accessories:
   a. Plate and bent-bar anchors: ASTM A36/A36M
   b. Sheet metal anchors and ties: ASTM A1008/A1008M
   c. Wire mesh ties: ASTM A185/A185M
   d. Wire ties and anchors: ASTM A82/A82M
   e. Headed bolt anchors: ASTM A307, Grade A
5. Coatings for Corrosion Protection
   a. Mill galvanized coatings
      1. Joint reinforcement: ASTM A641, 0.1 oz/ft2
      2. Sheet metal anchors and ties: ASTM A653, 1.50 oz/ft2
   b. Hot-dipped galvanized coatings
      1. Joint reinforcement, wire ties, and wire anchors: ASTM A153, 1.50 oz/ft2
      2. Sheet metal anchors and ties: ASTM A153, Class B
   c. Epoxy coatings
      1. Joint reinforcement: ASTM A884, Class A, Type 1, > 7 mils.
      2. Wire ties and anchors: ASTM A899, Class C, 20 mils.
      3. Sheet metal anchors and ties: 20 mils per manufacturer's specification.

2.04 MANUFACTURED UNITS

A. Concrete Masonry Units: ASTM C90
   1. Weight Classification: Medium Weight
   2. Size: 8"x 8"x16", All Lintel Blocks 8"x8"x8"
   3. Color: Special Order Color
   4. Texture: Precision
   5. Score: 11-Score (Side Units and Sides/Ends Units)

B. Concrete Masonry Units: ASTM C90
   1. Weight Classification: Medium Weight
   2. Size: 8"x 8"x16", All Lintel Blocks 8"x8"x8"
   3. Color: Special Order Color
   4. Texture: Precision
   5. Score: None

C. Concrete Masonry Caps: ASTM C90
   1. Weight Classification: Mediumweight
   2. Size: 8"x4"x16" Solid Beveled Cap
   3. Color: Special Order Color
   4. Texture: Precision
   5. Score: n/a

2.05 EQUIPMENT

2.06 COMPONENTS

2.07 ACCESSORIES

A. Joint Gaskets

1. Rubber Preformed Control Joint Gaskets: ASTM D2000, Designation M2AA-805
2. PVC Preformed Control Joints Gaskets: ASTM D2287, Type PVC

2.08 MIXES
A. Mortar
1. Mix preblended factory mix per manufacturer's instructions.
B. Conventional Grout
1. Mix grout to a consistency that has a slump between 8 and 11-inches per TMS 602/ACI 530.1/ASCE 6 Article 2.6B, or per admixture manufacturer's requirements.

2.09 FABRICATION
A. Shop Assembly
1. Fabricate reinforcement per TMS 602/ACI 530.1/ASCE 6 Article 2.7 A.

2.10 FINISHES
A. Finishing Materials
1. Water Repellents
a. See Section 07 19 00 Water Repellents
2. Exterior Painting
a. See Section 09 91 13 Exterior Panting

2.11 SOURCE QUALITY CONTROL

PART 3 EXECUTION

3.01 INSTALLERS
3.02 EXAMINATION
A. Site Verification of Conditions
1. Prior to the start of masonry installation, verify all conditions pertinent to the performance of work in this Section are acceptable.
2. Verify foundations are constructed with tolerances conforming to requirements of ACI 117.
3. Verify the reinforcing dowels are positioned in accordance with project drawings.
4. Masonry work shall not proceed until unsatisfactory conditions have been addressed.

3.03 PREPARATION
A. Protection
B. Surface Preparation
1. Clean reinforcement and shanks of anchor bolts by removing mud, oil, or other materials that will adversely affect bond to mortar or grout.
2. Reinforcement with rust and/or mil scale is acceptable provided attributes of a cleaned sample are in accordance with the applicable ASTM specification.
3. Prior to laying masonry, remove laitance, loose aggregate, and any other material that would prevent mortar from bonding to the foundation.
4. Do not wet units before laying, unless otherwise required. Wet cutting is permitted.

5. Cut units as required to fit; use motor-driven masonry saw. Install cut units with cut surfaces concealed as much as possible.

3.04 ERECTION

3.05 INSTALLATION

A. Masonry Units

1. Unit Selection
   a. Select and arrange units for exposed masonry to produce a uniform blend of colors and textures.
   b. Mix units from several pallets or cubes as they are placed.
2. Construction Tolerances
   a. Comply with tolerances in TMS 602/ACI 530.1/ASCE 6, Article 3.3F.
   b. All units shall be laid true, level, plumb, and in accordance with the drawings.
3. Construct grout spaces free of mortar dropping, debris, and any material deleterious to grouting.
4. Ensure all vertical cells to be grouted are aligned and unobstructed openings for grout are provided in accordance with project drawings.
5. Clean-Outs
   a. Construct cleanouts in the bottom course of masonry for each grout pour when the grout pour height exceeds 5-feet 4-inches.
   b. Create cleanout by cutting off entire face shell of unit. Replace face shell after inspection and before grouting.
   c. Brace cleanout closure to resist grout pressure.
   d. Space cleanouts horizontally a maximum 32-inches on center.
6. Unit Pattern
   a. Exposed masonry shall be laid in running bond pattern unless otherwise indicated on drawings.
   b. Concealed masonry shall be laid in running bond pattern unless otherwise indicated on drawings.
   c. Brace masonry during construction to assure stability. Contractor is responsible for designing, providing, and installing temporary bracing.

B. Mortar Bedding and Jointing

1. Place mortar in accordance with TMS 602/ACI 530.1/ASCE 6 Article 3.3 B.
2. Initial bed joint shall not be less than ¼-inch nor more than ¾-inch.
3. All head and bed joints, except Initial bed joints, shall be a nominal 3/8-inch thick, unless otherwise noted.
4. Thickness of bed joints shall not exceed 5/8-inch.
5. Lay units with head and bed joints filled with mortar for the thickness of the face shell.
6. Remove mortar protrusions extending ½-inch or more into cells to be grouted.
7. Fully mortar webs in all courses of piers, columns, and pilasters, in the starting course on foundations, and when necessary to confine grout.

8. All mortar joints on exposed walls shall be concave, unless otherwise indicated, and struck to produce a dense, slightly concave surface well bonded to the surface of the masonry unit.
    a. Exceptions:
        1. Mortar joints at units to receive ceramic tile shall be struct flush.
        2. Mortar joints at scored units shall be struct flush and follow score flutes salient and reentrant corners.
9. Remove and re-lay in fresh mortar any unit that has been disturbed to the extent the initial bond is broken.

C. Embedded Items and Accessories
1. Construct control joints as detailed in the drawings as masonry progresses.
2. Install preformed control-joint gaskets designed to fit standard sash block.
3. Construct chases as masonry units are laid.
4. Install pipes and conduits passing though masonry walls as units are laid.
5. Install and secure connectors, flashing, weep holes, weep vents, nailing blocks, and other accessories as required.

D. Installation of Reinforcing Steel, Wall Ties, and Anchors
1. Install reinforcing steel, wall ties, and anchors in accordance with T MS 602/ACI 530.1/ASCE 6 Article 3.4.
2. Place reinforcement as detailed on the drawings.
    a. Support and fasten reinforcement to prevent displacement beyond specified tolerances during construction and grouting operations.
    b. Maintain clear distances between reinforcement and any face of masonry unit or formed surface, but not less than ½-inch for course grout.
    c. Completely embed reinforcing bars in grout.
    d. Embed joint reinforcement with minimum 5/8-inch cover to faces exposed to weather or earth, and ½-inch elsewhere.
    e. Provide minimum 6-inch lap splices and ensure that all ends of longitudinal wires are embedded in mortar at laps.
    f. Tolerances for placement of reinforcing bars in walls and flexural elements shall be +/- ½-inch when the distance from the centerline of reinforcing bars to the opposite face of masonry, d, is equal to 8-inches or less +/- 1 ¼-inch for d greater than 24-inches.
    g. Foundation dowels that interfere with unit webs are permitted to be bent to a maximum of 1-inch horizontally for every 6-inches of vertical height.
3. Install wall ties as detailed on the drawings and in accordance with TMS 602/ACI 530.1/ASCE 6 Article 3.4 C.
4. Install anchor bolts ties as detailed on the drawings and in accordance with TMS 602/ACI 530.1/ASCE 6 Article 3.4 D.
    a. Embed headed and bent-bar anchor bolts in grout.
    b. Maintain clear distance between anchor bolts and any face of masonry unit or formed surface of at least ½-inch.

c. Maintain a clear distance between parallel anchor bolts not less the diameter of the anchor bolt, nor less than 1-inch.

E. Grouting
1. Comply with grout placement requirements in TMS 602/ACI 530.1/ASCE 6 Article 3.5.
2. Fill all cells with grout.
3. Place gout within 90 min. from introducing water in the mixture and prior to initial set.
4. Discard field-mixed grout does not meet specified slump without adding water after initial mixing.
5. For transit-mixed grout:
   a. Addition of water is permitted at time of initial discharge to adjust consistency to a slump between 8 and 11-inches.
   b. Discard transit-mixed grout that does not meet specified slump without adding water, other than as allowed in initial discharge adjustment.
   c. Transit-mixed grout may be used beyond the time limit as long as it meets the specified slump.
6. Grout pour height
   a. Do not exceed maximum gout pour height as given in TMS 602/ACI 530.1/ASCE 6 Table 7, or as otherwise specified.
7. Grout lift height:
   a. Maximum grout lifts shall not exceed 8-feet
8. Grout consolidation:
   a. Consolidate grout pours 12-inches or less by mechanical vibration.
   b. Consolidate grout pours exceeding 12-inches by mechanical vibration and reconsolidate after initial water loss and settlement has occurred.
   c. Shaking or rodding rebar is not allowed.
9. Grout Keys
   a. Required between grout pours, or between lifts when the previous lift is permitted to set prior to placement of the subsequent lift.
   b. Form grout key by terminating the grout a minimum of 1 ½-inch below a mortar joint.
   c. Do not form grout keys within beams.
   d. At beams or lintels laid with closed bottom units, terminate the grout pour at the bottom of the beam or lintel without forming a grout key.
10. Pointing and Cleaning
   a. Point and tool holes in mortar joints to produce a uniform, tight joint.
   b. Minimize any mortar or grout stains on the wall. Immediately remove any staining or soiling that occurs.
   c. For precision or textured units, except as noted below, clean masonry by dry brushing before tooling joints
   d. For burnished, glazed, or pre-finished concrete masonry units, immediately remove any green mortar smears or soiling with a damp sponge.

F. Control Joints
1. Provide vertical control joints in CMU walls as shown on plan.

2. Unless otherwise noted, vertical joints shall occur at 24-foot on-center spacing maximum along wall length, at floor or roof joints, wall height changes, and 24-inchs minimum past one side of openings greater than 6-feet wide.

G. Finishing
1. Water-Repellents
a. See Section 07 19 00 Water Repellents
2. Exterior Painting
a. See Section 09 91 13 Exterior Painting

3.06 APPLICATION
3.07 CONSTRUCTION
3.08 REPAIR/RESTORATION
3.09 RE-INSTALLATION
3.10 FIELD QUALITY CONTROL
A. Site Tests, Inspection
1. Inspection tasks and frequency shall be performed in accordance with the Statement of Special Inspections CBC Section 1704A.3 and DSA Form 103.
2. Tests
a. Unless indicated otherwise, perform one set of tests for each 5000 sq. ft. of wall area or portion thereof.
b. Concrete Masonry Units: Test per ASTM C140
c. Mortar and Grout Test: At the beginning of work, sample mortar and grout at one-week intervals per **CBC Section 2105A.3.**
1. Mortar: ASTM C1586
2. Grout: Test per ASTM C1019
3. Masonry Core Test:
a. Core and test per **CBC Section 2105A.4** from locations selected by the Architect.
1. Minimum (2) cores for each 5,000 square feet of masonry wall area, or portion thereof.
B. Manufacturers' Field Services

3.11 ADJUSTING
3.12 CLEANING
A. Final Cleaning
1. After mortar is thoroughly set and cured, clean exposed masonry surfaces of stains, efflorescence, mortar or grout droppings, and debris as follows:
a. Clean exposed CMU walls with a light sandblast. All non-masonry work near the area to be sandblasted shall be covered or protected before the sandblasting starts. Care shall be taken to avoid contamination to areas that are not to be sandblasted.
b. Burnished, glazed, or pre-finished concrete masonry units shall be protected from sandblast operations.
2. At completion of masonry work, remove all scaffolding and equipment used during construction, and remove all debris, refuse, and surplus masonry material from the site.

3.13 DEMONSTRATION

3.14 PROTECTION

3.15 SCHEDULES

A. Finishing

1. Water Repellents

a. Typical all walls, all exterior surfaces

B. Concrete Masonry Units

1. Location: Exterior (Exposed Faces to View)

a. Color: Special Order Color

b. Texture: Precision

c. Score: 11-Score (Vertical)

2. Location: Below Grade, Interior Walls

a. Color: Special Order Color

b. Texture: Precision

c. Score: None

END OF SECTION

SECTION 05 05 13
SHOP-APPLIED METAL FINISHES

PART 1 GENERAL

1.01 SUMMARY
- A. Section Includes
  1. Shop-Applied PVDF Finishes for metal work
  2. Shop-Applied Anodized Finishes for metal work
  3. Shop-Applied Powder Coat Finishes for metal work.
- B. Products Supplied But Not Installed Under This Section
- C. Products Installed But Not Supplied Under This Section
- D. Related Sections
  1. 05 12 00 Structural Steel Framing
  2. 05 50 00 Metal Fabrications
  3. 07 62 00 Sheet Metal Flashing and Trim
- E. Allowances
- F. Unit Prices
- G. Measurement Procedures
- H. Payment Procedures
- I. Alternates

1.02 REFERENCES
- A. AAMA 611 - Voluntary Specification for Anodized Architectural Aluminum.
- B. AAMA 2604 - Voluntary Specification, Performance Requirements and Test Procedures for High Performance Organic Coatings on Architectural Extrusions and Panels.
- C. AAMA 2605 - Voluntary Specification, Performance Requirements and Test Procedures for Superior Performing Organic Coatings on Architectural Extrusions and Panels.
- D. ASTM B449 - Standard Specification for Chromates on Aluminum.
- E. ASTM D1730 - Standard Practices for Preparation of Aluminum and Aluminum-Alloy Surfaces for Painting.
- F. ASTM D2244 - Standard Practice for Calculation of Color Tolerances and Color Differences from Instrumentally Measured Color Coordinates.
- G. ASTM D4214 - Standard Test Methods for Evaluating the Degree of Chalking of Exterior Paint Films.

1.03 DEFINITIONS

1.04 SYSTEM DESCRIPTIONS

1.05 SUBMITTALS
- A. General
- B. Product Data
  1. Submit manufacturer’s descriptive data and test results for specified finishes.
  2. Submit manufacturer’s RAL color wheel for custom color selection.
- C. Shop Drawings
- D. Samples
  1. Submit Samples minimum size 2“x 3-1/2” coating samples showing selected colors on aluminum backing.
- E. Quality Assurance/Control Submittals

1. Design Data, Test Reports, Certificates, Manufacturers' Instructions, Manufacturers' Field Reports, Qualification Statements
    a. Submit manufacturer's certification that finishes applied on Project components comply with referenced AAMA standards.

F. Closeout Submittals
1. Submit manufacturer's maintenance data information regarding touch-up, cleaning, and maintenance of finishes.

1.06 QUALITY ASSURANCE

A. Qualifications
1. Applicator shall be certified by AAMA and listed on AAMA Verified Components List.

B. Regulatory Requirements
1. Applicator - PVDF-Based Finishes:
    a. Use regenerative thermal oxidizer to destroy VOC's.
    b. Utilize chrome-based five-stage pretreatment system applied in accordance with AAMA and ASTM standards.
    c. Possess in-house blending capabilities, allowing for only specific amount of paint needed for each project.
    d. Utilize automated rotary atomization spray bell application providing uniform coverage with manual spray reinforcement for coverage in areas unreachable by automation.
    e. Employ skilled professional field service division to repair warranty or application issues arising at Project site.
    f. Utilize documented quality control protocol in accordance with AAMA 2605 test procedures.
    g. Apply AAMA 2605 compatible water-based air-dry system.
2. Applicator - Anodize Finishes:
    a. Offer both caustic (traditional) and eco-friendly (acid) etching technologies.
    b. Utilize fully automated, computer-controlled process lines for consistency throughout Project.
    c. Utilize documented quality control protocol in accordance with AAMA 611 test procedures :

C. Certifications

D. Field Samples

E. Mock-ups

F. Pre-installation Meetings

1.07 DELIVERY, STORAGE, AND HANDLING

A. Packing, Shipping, Handling, and Unloading
1. Apply manufacturer's standard protective coverings to finished surfaces.
2. Deliver, store, and handle finished components in manner to prevent damage to finishes.
3. Furnish touch-up paint along with each material shipment.

B. Acceptance at Site

C. Storage and Protection

D. Waste Management and Disposal

1.08 PROJECT CONDITIONS
1.09 SEQUENCING
1.10 SCHEDULING
1.11 WARRANTY
- A. Furnish manufacturer's 10-year warranty providing coverage that PVDF coatings:
  1. Will not chip, crack or peel (lose adhesion) but this does not include minute fracturing which may occur in proper fabrication of building parts.
  2. Will not chalk in excess of ASTM D4214 Number 8 rating, determined by procedure outlines in ASTM D4214.
- B. Furnish applicator's 10-year warranty providing coverage that anodized coatings:
  1. Will resist cracking, crazing, flaking, and blistering if forming and welding are completed prior to finishing; post-forming or welding voids warranty.
  2. Will not chalk in excess of ASTM D4214 Number 8 rating, determined by procedure outlined in ASTM D-4214.
  3. Will not change color more than five Delta-E Hunter units (square root of the sum of square Delta L, Delta a, and Delta b) as determined by ASTM D2244, Method 6.3. Fading or color changes may not be uniform if surfaces are not equally exposed to sun and elements.

1.12 SYSTEM STARTUP
1.13 OWNER'S INSTRUCTIONS
1.14 COMMISSIONING
1.15 MAINTENANCE

PART 2 PRODUCTS

2.01 MANUFACTURERS
2.02 EXISTING PRODUCTS
2.03 MATERIALS
2.04 MANUFACTURED UNITS
2.05 EQUIPMENT
2.06 COMPONENTS
2.07 ACCESSORIES
2.08 MIXES
2.09 FABRICATION
2.10 FINISHES
- A. Shop Priming, Shop Finishing
  1. PVDF-Based Coating
     a. AAMA 2605, fluoropolymer finish containing minimum 70 percent PVDF resins, two coat system, custom RAL color as selected by Architect.
  2. Anodize Finish
     a. AAMA 611, Architectural Class I anodized to 0.0007-inch minimum thickness, color to selected by Architect from the following colors: clear, champagne, light bronze, medium bronze, dark bronze, extra dark bronze, black, copper.

3. Powder Coat Finishes
   a. AAMA 2604, modified polyester resins, custom RAL color as selected by Architect.

2.11 SOURCE QUALITY CONTROL

PART 3 EXECUTION

3.01 INSTALLERS
3.02 EXAMINATION
3.03 PREPARATION
3.04 ERECTION
3.05 INSTALLATION
3.06 APPLICATION
3.07 CONSTRUCTION
3.08 REPAIR/RESTORATION
3.09 RE-INSTALLATION
3.10 FIELD QUALITY CONTROL
3.11 ADJUSTING
   A. Touch up minor scratches and abrasions in finishes in accordance with finish manufacturer's instructions; replace components having damage that cannot be successfully touched up.

3.12 CLEANING
   A. Clean finished surfaces after installation in accordance with finish manufacturer's instructions.

3.13 DEMONSTRATION
3.14 PROTECTION
3.15 SCHEDULES

END OF SECTION

SECTION 05 12 00

STRUCTURAL STEEL FRAMING

PART 1 - GENERAL

1.01 SUMMARY

A. Provide structural framing members, complete with required bracing, weld washers, nuts, shims, anchor bolts, and baseplates.

B. Shop Priming/Painting

1.02 RELATED WORK SPECIFIED IN OTHER SECTIONS

1.03 CODES AND STANDARDS

A. Refer to the following for information regarding materials and installation methods necessary:

1. American Society for Testing and Materials - Specifications A36, A53-B, A153, A570, A307, A370 and A500, A501 (also listed on **Structural Drawings)** A446, A611, A572 and A992.

2. American Institute of Steel Construction, **Steel Construction Manual, 15th Edition.**

3. American Welding Society - AWS D1.1 **–15** and AWS D1.8-16 Seismic Supplement

4. Steel Structures Painting Council.

5. Title 24, Part 2, C.C.R., **2019** C.B.C.

6. AISC 341-16 Seismic Design Manual.

1.04 SUBMITTALS

A. Shop drawings and product data shall be submitted in compliance with the pertinent provisions of the General Conditions and Section 01 33 00.

B. Submit shop and erection drawings prior to fabrication. Prepare erection drawings by State registered structural engineer. Show welded connections, lengths of welds, profiles, sizes, spacing and locations of all members, attachments, anchorages, framed openings size and type of fasteners, cambers and land loads. Contractor is responsible for dimensions on shop drawings.

1. Splices and deviations: Splices will be permitted only where and as shown on drawings. Deviations from design drawings are to be handled by Construction Change Document (CCD) and require

approval of the structural engineer and the Division of the State Architect.

C. Erection and bracing plan and procedure: Refer to Section 1710, Title 8, CCR. Employ a state licensed civil engineer to prepare erection and bracing plan and erection procedure for structural steel including columns, beams, and girders, who will be responsible for compliance. Follow plan and procedure exactly. Keep a copy at project site.

1.05 TESTS AND INSPECTIONS

A. If structural steel can be identified by heat or melt numbers and is accompanied by mill analysis and test reports **per Section 2203A.1**, testing shall be in accordance with **Section 2213A**, Title 24. Identified stock shall be tested also.

B. If structural steel cannot be identified or its source is questionable, all steel must be tested for tension and bending for each shape and size.

C. Furnish test specimens from steel fabricator and take them under the direction of the Testing Agency. Machine each test specimen by Testing Agency to dimensions required by ASTM A370.

D. Have Testing Agency pick up test specimens and make required tests.

E. Costs of tests of identified stock will be paid for by Owner, unless tests fail to comply with the specifications, in which case Owner will back-charge the contractor.

F. Complete a SIX-sided inspection of all steel. Owner will pay for such inspection unless structural steel is not fabricated within twenty-five miles of the project site, in which case Owner will back-charge the contractor.

G. After fabrication and inspection, costs associated with re-inspection of defective or replaced materials will not be the responsibility of the Owner.

H. Provide all labor, equipment and facilities necessary for moving and handling materials to be inspected.

I. Cost for supervision by a registered inspector of all welding operations, including inspection for quality, penetration, and conformity of drawings, and a report verifying that welding is adequate and was done in conformity of all project requirements will be paid for by Owner. Sections **1701A.4 and 1705A.2.5,** Title 24, CBC.

1. Visually inspect all welds and inspect grouting of column base plates.

J. Comply with **Sections 2213A.1 and 2213A.2**, Title 24.

K. Shop fabrication inspections per **Section 1704A.2.5.**

1.06 PROJECT CONDITIONS

A. Verify measurements, lines, grades, locations and details at project site. Conform to existing actual field conditions.

PART 2 - PRODUCTS

2.01 MATERIALS AND COMPONENTS

A. Structural Steel Members: Type for general construction, weldable steel, conforming to requirements of ASTM A36, A36/A572, or A992 as per plans, and as required, shop primed or galvanized where left exposed to elements of weather. Title 24, **2203A.1 and 2205A**.

B. Structural Pipe: Provide ASTM A53, (Type E or S) or A501.

C. Tube Steel: Provide ASTM A500 Grade B Type, Fy=46 ksi.

D. Cast Steel: Provide in accordance with A27.

E. Machine Bolts: ASTM A307

F. High strength bolts: **ASTM A325 or ASTM A490.**

G. Comply with Title 24, Section **2205A**.

H. Anchor Rods: As specified on drawings.

2.02 LIGHT STRUCTURAL STEEL

A. Standard Specifications for Flat-Rolled Carbon Steel Sheets of Structural Quality, ASTM A570 or A611, A446

B. Standard Specifications for Hot-Formed Welded and Seamless Carbon Steel Structural Tubing, ASTM A36 and A501, or Cold Formed Tubing, ASTM A500, Grade B

2.03 WELDING ELECTRODES

A. Steel: Conform to **AWS D1.1-15** & Section **2204A.1**, Title 24, Classification E70 series as required for rigid frames the electrodes shall meet Charpy V-notch 20 ft. lbs. At minus 20 **degrees** F. For welding of 'LFRS', electrodes must meet Charpy V-Notch toughness of 40 ft-lb at 70 degrees F.

B. Stainless Steel: Conform to **ANSI/AWS A5.9 &ASME SFA 5.9 ER 316LSi.** E309L Electrodes, AISC Design Guide 27 Section 9.2, Table 9-1

2.04 GALVANIZING

A. Provide hot-dip galvanizing in accordance with ASTM A123 - Standard Specification for Zinc (Hot-Dip Galvanized) Coatings on Iron and Steel Products.

B. Cold galvanizing: See Section 09 97 13 Steel Coatings.

2.05 PRIMER

A. Shop Applied Primer:

1. Tnemec Series 94-H20 Hydro-Zinc, Aromatic Urethane-Zinc Rich.

2.06 OTHER MATERIALS

A. Provide other materials, not specifically described or indicated but required for a complete and proper installation, as selected by Contractor subject to acceptance by Engineer.

PART 3 - EXECUTION

3.01 SURFACE CONDITIONS

A. Prior to commencing work of this section, inspect the work of others and verify that such work has been properly completed and installed to allow for proper installation of all materials and methods required of this section.

3.02 FABRICATION AND ERECTION

A. Fabricate and assemble work with skilled personnel using sizes and weights shown. Connections are to be as detailed, unless approved otherwise beforehand. Allow no splices except where shown.

1. Ultrasonic material inspection - ultrasonically test column materials thicker than 1-1/2 inch for laminations within 1 foot (6 inches either side) of a direct groove weld from girder flange connections and column splices.

2. Rigid frames: Fabrication welding and erection of rigid frames.

a) The fabricator shall provide fabrication/erection inspector to oversee the fabrication, welding and erection of the rigid frames. This inspector is in addition to the District's verification inspector.

b) A welding procedure specification, prepared in accordance with AWS requirements, shall be submitted to the project structural engineer and project inspector.

B. Drilling, Punching and Reaming: Hole burning to make or enlarge previous holes is not allowed. Prepare required holes in structural steel members for attachment or passage or work of other trades. Where allowed, steel may be punched 1/16 inch larger than the nominal diameter of the bolt when thickness of the steel is equal to or less than the diameter of the bolt plus 1/8 inch. Where the steel is thicker than the diameter of the bolt plus 1/8 inch, the holes must be drilled or sub-punched and reamed. Diameter of the sub-punched holes, and the drill for sub-drilled holes, is to be 1/16 inch

smaller than the nominal diameter of bolt to be installed. Precisely locate finished holes to ensure passage of all bolts through steel assemblies without drifting. Enlarge holes only by reaming. Poor matching of holes is cause for rejection of work.

C. Welding: Perform welding by the electric shielded arc process. Cut out defective welds with a chisel. Clamp or hold materials securely in position for welding. Upon completion, remove slag and clean welds for inspections and painting. All groove and multi-pass welds are required to be continuously inspected. Welding shall conform to T-24, **2204A.1**.

1. Storage and care of electrodes - Ensure that coatings of low hydrogen type electrodes are thoroughly dry when used. Use electrodes taken from hermetically sealed packages within 4 hours of the time the package is opened. Electrodes not used within this time period, and electrodes which have been exposed more than one hour to air having a relative humidity of 75 percent or greater, are to be dried for at least 2 hours at 200 to 250 degrees F. before used, or are to be reconditioned according to manufacturer's printed recommendations. Electrodes dried or reconditioned which are not used within 4 hours after drying is completed are to be re-dried before use. Electrodes of any classifications that have been wet are not to be used under any conditions.

2. Preparation - Clean surfaces to be welded, or paint, grease, scale, and foreign matter. Clean welds each time electrode is changed. Chip entire area of hand-guided and controlled flame cut edges before welds are deposited. In general, surfaces made by automatic or mechanically guided and controlled equipment need not be ground or chipped before welded.

3. Procedures - During assembling and welding, hold components of a built-up member with sufficient clamps or other adequate means to keep parts straight and in close contact. Do no welding in wind until adequate protective screening has been set up. Cut out defective welds or parts of welds with chisel or air arc and replace.

4. Characteristics of welds - After being deposited, brush welds and ensure they exhibit uniform section, smoothness of weld metal, feather edges without undercuts or overlays, and freedom from porosity and clinkers. Ensure through visual inspection at edges and ends of fillet welds there is good fusion and penetration into base metal.

D. Bolting

1. Common bolts - make connections with common bolts only where indicated. (ASTM A307 Bolt.)

2. High strength steel bolting - where structural joints are made using high strength bolts, hardened washers, and nuts tightened to a high tension, the materials, method of installation and tension control, types of wrenches to be used, and inspection methods are

to conform to specifications for structural jointing using ASTM F3125, Grade A325 or Grade A490 bolts established by the Research Council on Riveted and Bolted Structural Joints of the Engineering Foundation and the following requirement:

a. Provide high strength bolts with a suitable identifying mark placed on top of the head before leaving factory.

b. Do tightening of nuts with properly calibrated wrenches or turn of nut method; the minimum bolt tension for the size of bolt used is to be in accordance with tables listed in the above standards and as required by AISC in the presence of the special inspector.

c. Check calibrated wrenches individually for accuracy at least once daily for actual condition of application.

d. Mark bolts that have been completely tightened with identifying symbol.

e. Install hardened washers in accordance with AISC specifications.

f. Ensure that contact bearing surfaces and threads of bolted parts are free of scale, slag, and burrs which could prevent solid seating of parts.

g. Bolt lengths are to be grip plus 1-1/4 inch.

3. Load indicator washers - provide as manufactured/licensed by Cooper and Turner, or Bethlehem Steel. They may be used for field installation of high-strength bolts. These washers may not be substituted for any required washer, but may be used in conjunction with required washers. Tightening is to be in accordance with these specifications using high strength bolts. After sufficient bolts in a joint are snugged to draw the members into close contact, tightening should progress from the most rigid part to the free edges until the load indicators on all bolts are closed to the required gap of 0.015 inches under bolt heads or 0.005 inches under the load indicator at half of the gaps or as required per manufacturer. To prevent over tightening and damage to the bolts, do not completely close the gap.

4. For alternatives to load indicator washers, see structural drawings.

E. Erection

1. Erect structural steel by professional riggers, using proper hoists and equipment, carefully planned and laid out so that cutting will not be necessary. Erect the work plumb, square and true to line. Provide temporary bracing and guys where necessary to provide for loads and stresses to which the structure may be subjected, including those due to erection equipment and its operation, and

leave in place as long as necessary to safeguard all parts of the work.

2. Temporary connections - securely bolt work to maintain the steel in proper position while bolting and welding is being performed. Align, plumb and level all work prior to welding and final bolting.

3. Set column base plates in exact position as to alignment, level and elevation and support on steel wedges or equivalent until grout has properly set. Center of each base is to be true to the column center within 1/16 inch and adjusted to its elevation to 1/32 inch. Exactly level plates on both axis.

4. Sequence - carry out the erection of steel in the proper sequence with the work of others. Frame, bed and anchor to concrete and related work in accordance with detailed drawings and setting diagrams.

5. Erection tolerance in accordance with AISC's "Code of Standard Practice for Steel Buildings and Bridges."

6. Perform erection with suitable equipment, of adequate capacity and design with due regard for personnel and public safety and as not to deflect or stress members beyond reasonable limits. Maintain erection and temporary bracing plan at project site in accordance with Title 8, CAC.

7. Damaged members - during erection, straighten or replace members which are bent, twisted or damaged as directed. If heating is required in straightening, perform heating by methods which ensure uniform temperatures throughout entire member. When directed, remove members which are not damaged to an extent impairing their appearance, strength or serviceability and replace with new members at no additional cost to Owner and must have DSA approval.

8. Anchor bolts - provide with setting drawings and instructions. Verify position of bolts prior to delivery of steel; report errors or deviation for adjustment.

9. Erection of frame moment connections of a 325 bolt, erection sequence: 1. Bolts finger tight; 2. Welding; 3. Full bolt installation test by calibrated wrench, wrench calibrated at job site per Section **2204A.2**, Title 24.

F. Erection Bracing: Provide erection bracing immediately upon erection of members and leave in place until all members are braced by balance of building.

G. Protection of Floors and Temporary Flooring:

1. Exercise caution to protect floor surfaces and adjacent work from damages. Do not overload floors. Provide only pneumatic tired

mobile equipment for moving steel. Do not place steel members directly on concrete floors; use pads, or timbers, or other materials for cushioning.

2. Provide necessary planking, scaffolding and temporary flooring in connection with erection of steel or support of erection machinery as part of the work. Conform use of temporary floors or steel deck to governing codes and regulations.

3. Temporarily tack weld steel deck to supports where used as a working platform. Distribute concentrated loading from welding machines or other heavy machinery by planking or other equivalent means. Replace steel deck damaged by using as working platform at no additional cost to Owner.

H. Shop Priming:
1. General
a. All steel members shall be shop primed.
1. Exceptions:
a. When Steel is embedded in concrete of grouted masonry.
b. When steel is hot-dipped galvanized.
c. When steel is stainless steel.
d. When steel is scheduled to receive shop applied finishes, such as PVDF Coatings, powder coatings, etc.
2. Shop Priming
a. Surface Preparation: All members shall be clean, dry, and free of oil, grease, and other contaminants. All members surfaces shall achieve a minimum SSPC-SP3 Power Tool Cleaning.
b. Coverage Rates: Film thickness shall be a minimum of 2.5 Mils dry film thickness.
c. Field Touch Ups: As required, coverage rates to match shop applied application.
3. Application Schedule
a. All steel members: Tnemec Series 94-H20 Hydro-Zinc

3.03 TEST AND INSPECTION

A. Tests of Structural and Cold Formed Steel - **1705A.2**

B. Welding – **1705A.2.5**

C. H.S. Bolts –table 1705A.2.1 and **2213A.1**

D. End Welded Studs – **1705A.2 and 2213A.2**

E. Shop Fab – 1704A.2.5 and **1705A.2**

3.04 CLEANING

A. Clean site after work of this section.

B. Remove weld splatters

C. Use galvanizing repair coating specified, then re-prime areas of materials damaged during installation and other construction activities and leave in condition for subsequent finish painting or application of additional finish materials provided by others.

END OF SECTION

SECTION 05 31 00
STEEL DECKING

PART 1 GENERAL

1.01 SUMMARY
- A. Section Includes
  - 1. Steel Decking
- B. Products Supplied But Not Installed Under This Section
- C. Products Installed But Not Supplied Under This Section
- D. Related Sections
  - 1. 05 12 00 Structural Steel Framing
- E. Allowances
- F. Unit Prices
- G. Measurement Procedures
- H. Payment Procedures
- I. Alternates

1.02 REFERENCES

1.03 DEFINITIONS

1.04 SYSTEM DESCRIPTIONS
- A. Design Requirements, Performance Requirements
  - 1. Steel deck panels used as a component of horizontal or sloped floor and roof systems supporting vertical loads, in-plane diaphragm shears, and in-plane axial loads.

1.05 SUBMITTALS
- A. General
- B. Product Data
  - 1. Submit manufacturer's product data for each product specified.
- C. Shop Drawings
  - 1. Submit shop and erection drawings prior to fabrication. Prepare erection drawings by State registered structural engineer. Show welded connections, lengths of welds, profiles, sizes, spacing and locations of all members, attachments, anchorages, framed openings size and type of fasteners, and land loads. Contractor is responsible for dimensions on shop drawings.
- D. Samples
- E. Quality Assurance/Control Submittals
  - 1. Design Data, Test Reports, Certificates, Manufacturers' Instructions, Manufacturers' Field Reports, Qualification Statements

1.06 QUALITY ASSURANCE

1.07 DELIVERY, STORAGE, AND HANDLING

1.08 PROJECT CONDITIONS

1.09 SEQUENCING

1.10 SCHEDULING

1.11 WARRANTY

1.12 SYSTEM STARTUP

1.13 OWNER'S INSTRUCTIONS

1.14 COMMISSIONING

1.15 MAINTENANCE

PART 2 PRODUCTS

2.01 MANUFACTURERS
- A. Verco Decking, Inc., 4340 North 42nd Ave., Phoenix, AZ, 85019, or Equal.

2.02 EXISTING PRODUCTS

2.03 MATERIALS
- A. Steel Decking
  - 1. (Verco) Type 2.0 D, IAPMO UES ER-0423
    - a. Height: As indicated on Structural Drawings
    - b. Gauge: As indicated on Structural Drawings
    - c. Acoustical Perforations: No
    - d. Acoustical Spacers: No
    - e. Fiberglass Acoustical Insulation: No

2.04 MANUFACTURED UNITS

2.05 EQUIPMENT

2.06 COMPONENTS

2.07 ACCESSORIES

2.08 MIXES

2.09 FABRICATION

2.10 FINISHES
- A. Shop Priming, Shop Finishing
  - 1. Steel Decking: Shop Prime White over Galvanized coating, G90.

2.11 SOURCE QUALITY CONTROL

PART 3 EXECUTION

3.01 INSTALLERS

3.02 EXAMINATION

3.03 PREPARATION

3.04 ERECTION

3.05 INSTALLATION
- A. Install in accordance with IAPMO UES Evaluation Report Numbers listed for each deck specified.
- B. Install in accordance with Structural Drawings.

3.06 APPLICATION

3.07 CONSTRUCTION

3.08 REPAIR/RESTORATION

3.09 RE-INSTALLATION

3.10 FIELD QUALITY CONTROL

3.11 ADJUSTING

3.12 CLEANING

3.13 DEMONSTRATION

3.14 PROTECTION

3.15 SCHEDULES

END OF SECTION

SECTION 05 40 00
COLD-FORMED METAL FRAMING

PART 1 GENERAL

1.01 SUMMARY
- A. Section Includes
  1. Steel Studs
  2. Suspension/Furring Materials
  3. Miscellaneous Furring
  4. Fasteners
- B. Products Supplied But Not Installed Under This Section
- C. Products Installed But Not Supplied Under This Section
- D. Related Sections
  1. 09 97 13 Steel Coatings
- E. Allowances
- F. Unit Prices
- G. Measurement Procedures
- H. Payment Procedures
- I. Alternates

1.02 REFERENCES
- A. Steel Stud Manufacturers Association (SSMA) Product Technical Guide, Current Edition.
- B. AISI S100-16: North American Specification for the Design of Cold-Formed Steel Structural Members
- C. ICC ESR 3064-P: SSMA Cold-Formed Steel Framing
- D. ASTM A1003/A1003M: Standard Specification for Steel Sheet, Carbon, Metallic and Nonmetallic Coated for Cold-Formed Framing Members
- E. ASTM A653/A653M: Standard Specification for Steel Sheet, Zinc-Coated (Galvanized) or Zinc-Iron Alloy-Coated (Galvannealed) by the Hot-Dip Process.
- F. ASTM C1007: Standard Specification for Installation of Load Bearing (Transverse and Axial) Steel Studs and Related Accessories.

1.03 DEFINITIONS

1.04 SYSTEM DESCRIPTIONS
- A. Design Requirements, Performance Requirements
  1. Design, Fabrication, and Erection of Cold-Formed Steel Framing shall conform to the specifications and standard of the American Iron and Steel Institute (AISI) S1000-16 North American Specification for the Design of Cold-Formed Steel Structural Members.
  2. All S,T,U,F profiles shall be SSMA listed in ICC ESR 3064-P.

1.05 SUBMITTALS
- A. General
- B. Product Data
  1. Submit product data for each item proposed for installation.
- C. Shop Drawings
  1. Submit drawings showing framing, connection details, accessories, and anchorage. Indicate location of assemblies, size, and spacing of framing components.

D. Samples
E. Quality Assurance/Control Submittals
F. Closeout Submittals

1.06 QUALITY ASSURANCE
A. Qualifications
1. Manufactures shall be current /members of the Steel Stud Manufacturer's Association (SSMA).
B. Regulatory Requirements
C. Certifications
D. Field Samples
E. Mock-ups
F. Pre-installation Meetings

1.07 DELIVERY, STORAGE, AND HANDLING
A. Packing, Shipping, Handling, and Unloading
1. Deliver all components to the job site in manufacturer's unopened containers or bundles, fully identified with name, brand, type, and grade.
B. Acceptance at Site
1. Items delivered in broken, bent, damaged, rusted, or unlabeled conditions will be rejected and removed from the site.
C. Storage and Protection
1. Store and protect all materials from exposure to weather and damage.
2. All components shall be stored off ground, covered, and in well ventilated spaces.
D. Waste Management and Disposal

1.08 PROJECT CONDITIONS
1.09 SEQUENCING
1.10 SCHEDULING
1.11 WARRANTY
1.12 SYSTEM STARTUP
1.13 OWNER'S INSTRUCTIONS
1.14 COMMISSIONING
1.15 MAINTENANCE

PART 2 PRODUCTS

2.01 MANUFACTURERS
A. Profiles (S,T,U,F) and Standard Accessories
1. United Metal Products, 234 N. Sherman Ave, Corona, CA 92882, or Equal.
2. Consolidated Fabricators, Corp., 8584 Mulberry Street, Fontana, CA 92335
B. Special Connection Accessories (Where Indicated On Drawings)
1. CEMCO, 13191 Crossroads Pkwy, North Ste. 325, City of Industry, CA 91746, or Equal.
2. ClarkDietrich Building Systems, 9050 Centre Pointe Drive, Suite 400, West Chester, OH 45069

2.02 EXISTING PRODUCTS

2.03 MATERIALS
- A. Material Specifications
  - 1. Nonstructural Products
    - a. ASTM A1003 Grade 33,Fy=33 ksi, unless noted otherwise.
  - 2. Structural Products
    - a. ASTM A1003 Grade 33, Fy=33 ksi, 18 Gauge. (43 mils) or thinner, unless noted otherwise.
    - b. ASTM A1003 Grade 50, Fy=50 ksi, 16 Gauge (54 mils) or thicker, unless noted otherwise.
- B. Fasteners
  - 1. Sheet Metal Screws (SMS)
    - a. ASTM C1513, self-drilling and tapping type with pancake framer head type for #10 SMS and smaller and hex washer head type for #12 and #14 SMS unless noted otherwise.

2.04 MANUFACTURED UNITS
2.05 EQUIPMENT
2.06 COMPONENTS
2.07 ACCESSORIES
2.08 MIXES
2.09 FABRICATION
2.10 FINISHES
- A. Shop Priming, Shop Finishing
  - 1. All products: ASTM A653/A653M G60 Coating, unless otherwise noted.

2.11 SOURCE QUALITY CONTROL

PART 3 EXECUTION

3.01 INSTALLERS
3.02 EXAMINATION
- A. Site Verification of Conditions
  - 1. Prior to start of installation, review area of potential interference and conflicts and coordinate layout and support provisions for interfacing work.

3.03 PREPARATION
3.04 ERECTION
- A. General
  - 1. All load bearing cold-formed metal framing shall be installed per ASTM C1007.
  - 2. All cold-formed metal framing shall be erected plumb and true to line.
  - 3. Install all necessary accessories for proper installation.
  - 4. Provide a minimum of three studs at corners of walls. Align studs to provide anchoring surface for attachment of interior and exterior substrates.
  - 5. Install studs squarely in top and bottom runner track with frim abutment against track webs.
- B. Bracing
  - 1. Temporary bracing shall be installed and left in place until other means is provided to adequately brace the structure.

2. All cold-formed steel framing shall be braced as required by Section D3 of the AISI Specification.

C. Fastening
1. Cold-formed steel studs and tracks shall be attached with sheet metal screws with sizes called out on the details. Penetrations of screws through joined material shall not be less than three exposed threads.
2. Screws shall be installed and tightened in accordance with screw manufacturer's recommendations.
3. Fasten stud flanges to both bottom and top runner tracks.
4. Anchor top and bottom runner track to roof structure overhead and to floor structure below.
5. Wire tying of framing members is not permitted.

D. Punching
1. Cold-formed stud members shall be unpunched where used for the following:
   a. Headers and sills of openings
   b. Built-up box and back-to-back sections
2. Punch-outs shall be located in the center of the web with a minimum spacing of 24-inches o.c., have maximum width of half the member depth or 2 ½-inch, whichever is less, and a maximum length of 4 ½-inch.
3. The minimum distance between the end of the member and the near edge of the punch-out shall be 12-inch.

3.05 INSTALLATION
3.06 APPLICATION
3.07 CONSTRUCTION
3.08 REPAIR/RESTORATION

A. Touch-up field abrasions and welds with cold galvanizing. See Section 09 97 13 Steel Coatings.

3.09 RE-INSTALLATION
3.10 FIELD QUALITY CONTROL
3.11 ADJUSTING
3.12 CLEANING

A. The contractor of this work shall keep the area clean of the debris resulting from execution and completion of work per this section.

3.13 DEMONSTRATION
3.14 PROTECTION
3.15 SCHEDULES

END OF SECTION

SECTION 05 50 00
METAL FABRICATIONS

PART 1 GENERAL

1.01 SUMMARY

A. Section Includes
   1. Miscellaneous metal fabrications including but not limited to:
      a. Angles
      b. Plates
      c. Sheet goods
      d. Fencing and gates
      e. Steel handrails
      f. Steel guardrails

B. Products Supplied But Not Installed Under This Section

C. Products Installed But Not Supplied Under This Section

D. Related Sections
   1. 05 05 13 Shop-Applied Metal Finishes
   2. 05 12 00 Structural Steel Framing
   3. 09 91 13 Exterior Painting
   4. 09 91 23 Interior Painting
   5. 09 97 13 Steel Coatings

E. Allowances

F. Unit Prices

G. Measurement Procedures

H. Payment Procedures

I. Alternates

1.02 REFERENCES

A. AISC Manual of Steel Construction, Latest Edition

B. ASTM A36: Standard Specification for Carbon Structural Steel

C. ASTM A53: Standard Specification for Pipe, Steel, Black and Hot-Dipped, Zinc-Coated Welded and Seamless

D. ASTM A108: Standard Specification for Steel Bar, Carbon and Alloy, Cold-Finished

E. ASTM A123: Standard Specification for Zinc (Hot-Dip Galvanized) Coatings on Iron and Steel Products

F. ASTM A307: Standard Specification for Carbon Steel Bolts, Studs, and Threaded Rod 60000 PSI Tensile Strength

G. ASTM A475: Standard Specification for Zinc-Coated Wire Strand

H. ASTM A500: Standard Specification for Cold-Formed Welded and Seamless Carbon Steel Structural Tubing in Rounds and Shapes

I. ASTM A501: Standard Specification for Hot-Formed Welded and Seamless Carbon Steel Structural Tubing

J. ASTM A513: Standard Specification for Electric-Resistance-Welded Carbon and Alloy Steel Mechanical Tubing

K. ASTM A563: Standard Specification for Carbon and Alloy Steel Nuts

L. ASTM A569: Standard Specification for Steel, Carbon, (0.15 Maximum, Percent), Hot-Rolled Sheet and Strip Commercial Quality

M. ASTM A653: Standard Specification for Steel Sheet, Zinc-Coated (Galvanized) or Zinc-Iron Alloy-Coated (Galvannealed) by the Hot-Dip Process

N. ASTM A992: Standard Specification for Structural Shapes

O. ASTM A1008: Standard Specification for Steel, Sheet, Cold-Rolled, Carbon, Structural, High-Strength Low-Alloy with Improved Formability, Solution Hardened, and Bake Hardenable
P. ASTM A1011: Standard Specification for Steel, Sheet and Strip, Hot-Rolled, Carbon, Structural, High-Strength Low-Alloy, High-Strength Low-Alloy with Improved Formability, and Ultra-High Strength
Q. ASTM F1554: Standard Specification for Anchor Bolts, Steel, 36, 55, and 105-ksi Yield Strength
R. ASTM A312: Standard Specification for Seamless, Welded, and Heavy Cold Worked Austenitic Stainless Steel Pipes
S. ASTM A314: Standard Specification for Stainless Steel Billets and Bars for Forging
T. ASTM A480: Standard Specification for General Requirements for Flat-Rolled Stainless and Heat-Resisting Steel Plate, Sheet and Strip
U. ASTM A554: Standard Specification for Welded Stainless Steel Mechanical Tubing
V. ASTM B108: Standard Specification for Aluminum-Alloy Permanent Mold Castings
W. ASTM B209: Standard Specification for Aluminum and Aluminum-Alloy Sheet and Plate
X. ASTM B221: Standard Specification for Aluminum and Aluminum-Alloy Extruded Bars, Rods, Wire, Profiles, and Tubes
Y. SSOC-PA 1, Shop, Field, and Maintenance Painting of Steel
Z. AWS D1.1 Structural Welding - Steel

1.03 DEFINITIONS
A. AISC: American Institute of Steel Construction
B. SSPC: The Society for Protective Coatings
C. AWS: American Welding Society

1.04 SYSTEM DESCRIPTIONS
A. Design Requirements, Performance Requirements
1. Design, fabrication, and erection of steel shall conform to the specifications and standards of the AISC, as contained in the latest edition of the “AISC Manual of Steel Construction.”

1.05 SUBMITTALS
A. General
B. Product Data
1. Submit product data for manufactured items.
2. Submit product data for primers and finishes.
C. Shop Drawings
1. Submit fabrication shop drawings for all metal fabrications. Shop drawings to indicate materials, dimensions, anchoring and terminations.
D. Samples
1. Where other than mill finishes are specified, provide samples of specified finish.
E. Quality Assurance/Control Submittals
1. Design Data, Test Reports, Certificates, Manufacturers’ Instructions, Manufacturers’ Field Reports, Qualification Statements
F. Closeout Submittals

1.06 QUALITY ASSURANCE

A. Qualifications
   1. All metal fabrications shall meet the material/grade as specified.
   2. All welders shall have evidence of passing the AWS standard qualification tests and shall be certified for the work they are performing.

B. Regulatory Requirements
   1. Top of gripping surfaces of handrails shall be 34″ minimum and 38″ maximum vertically above walking surfaces, stair nosing, and ramp surfaces. Handrails shall be at a consistent height above such surfaces.
   2. Clearance between handrail gripping surfaces and adjacent surfaces shall be 1-1/2″ minimum. Handrail may be located in a recess if the recess is 3″ maximum deep and 18″ minimum clear above the top of the handrail.
   3. Handrail gripping surfaces shall be continuous along their length and shall not be obstructed along their tops or sides. The bottoms of handrail gripping surfaces shall not be obstructed for more than 20% of their length. Where provided, horizontal projections shall occur 1-1/2″ minimum below the bottom of the handrail gripping surfaces.
   4. Handrail gripping surfaces with a circular cross section shall have an outside diameter of 1-1/4″ minimum and 2″ maximum.
   5. Handrail gripping surfaces with a non-circular cross section shall have an outside dimension of 4″ minimum and 6-1/4″ maximum, and a cross-sectional dimension of 2-1/4″ maximum.
   6. Handrail gripping surfaces and any surfaces adjacent to them shall be free of sharp or abrasive elements and shall have rounded edges.
   7. Handrails shall not rotate within their fittings.
   8. Handrails gripping surfaces shall extend beyond and in the same direction of stair flights and ramp runs in accordance with **CBC Section 11B-505.10**. Such extensions are not required for continuous handrails at the inside turn of switchback or dogleg stairs and ramps.
   9. The orientation of at least one handrail shall be in the direction of the stair run, perpendicular to the direction of the stair noising, and shall not reduce the minimum required width of the stair. **CBC Section 11B-505.2.1.**
   10. A 2″ minimum high curb or a barrier shall be provided to prevent the passage of a 4″ diameter sphere rolling off the sides of a ramp surface. Such a curb or a barrier shall be continuous and uninterrupted along the length of the ramp. **CBC Section 11B-405.9.2.**

C. Certifications

D. Field Samples

E. Mock-ups

F. Pre-installation Meetings

1.07 DELIVERY, STORAGE, AND HANDLING

A. Packing, Shipping, Handling, and Unloading

B. Acceptance at Site

C. Storage and Protection

1. Store metal fabrications items above grade on platforms, skids, or other supports.

D. Waste Management and Disposal

1.08 PROJECT CONDITIONS
1.09 SEQUENCING
1.10 SCHEDULING
1.11 WARRANTY
1.12 SYSTEM STARTUP
1.13 OWNER'S INSTRUCTIONS
1.14 COMMISSIONING
1.15 MAINTENANCE

PART 2 PRODUCTS

2.01 MANUFACTURERS

A. Shop Primer

1. See Section 05 12 00 Structural Steel Framing

2.02 EXISTING PRODUCTS
2.03 MATERIALS

A. Steel

1. Plates: ASTM A36
2. Bars: ASTM A36
3. Bars (Cold-Finished): ASTM A108
4. Tubing (Hot-Formed Welded and Seamless): ASTM A501
5. Tubing (Cold-Formed Welded and Seamless): ASTM A500, Grade B
6. Tubing (Mechanical): ASTM A513
7. Sheets (Hot-Rolled): ASTM A1011, A569
8. Sheets (Cold-Rolled): ASTM A1008
9. Sheets (Galvanized): ASTM A653, G90
10. Pipes: ASTM A500, Grade B, Sched. 40 unless noted otherwise
11. Bolts, Studs, Threaded Rods: ASTM A307
12. Nuts: ASTM A563
13. Wire Strand: ASTM A475, Min. Common grade, Class B zinc coating

B. Stainless Steel Alloy, Type 302/304

1. Sheet: ASTM A480
2. Pipe: ASTM A312
3. Mechanical Tube: ASTM A554
4. Bars: ASTM A314

C. Aluminum, 6061-T4 alloy

1. Extruded Bars: ASTM B221
2. Extruded Rods: ASTM B221
3. Extruded Wire: ASTM B221
4. Extruded Profiles: ASTM B221
5. Extruded Tubes: ASTM B221, 6063-T6 alloy
6. Sheets: ASTM B209
7. Plates: ASTM B209
8. Castings: ASTM B108, 214 alloy

2.04 MANUFACTURED UNITS
2.05 EQUIPMENT
2.06 COMPONENTS

2.07 ACCESSORIES

2.08 MIXES

2.09 FABRICATION

A. General

1. Fabrication of steel shall conform to the specifications and standards of the AISC, as contained in the latest edition of the "AISC Manual of Steel Construction."
2. All connections not show shall be submitted on the shop drawings for review prior to fabrication.
3. Verify actual filed dimensions prior to any fabrication.
4. Fabricate items with joints neatly fitted and properly secured.
5. Fit and shop assemble in largest practical sections for delivery to site.
6. Make exposed joints flush butt type hairline joints where mechanically fastened.
7. Supply components required for proper anchorage of metal fabrications. Fabricate anchorage and related components of same material and finish as metal fabrication, unless otherwise specified or shown.

B. Exposed Mechanical Fastenings

1. Flush countersunk screws or bolts unobtrusively located, consistent with design of structure, except where specifically noted otherwise.

C. Welding

1. Perform shop welding in accordance with AWS D1.1.
2. Exposed welds shall comply with AISC Code of Standard Practice, Section 10

2.10 FINISHES

A. General

1. All steel fabrications shall be shop primed.
   a. Do not shop prime finishes to be hot-dip galvanized coated.
   b. Do not shop prime finishes to be PVDF coated
   c. Do not shop prime weathering steel.
   d. Do not shop prime surfaces in direct contact with concrete or other cementations materials.
   e. Do not shop prime surfaces requiring field welding.
2. Shop prime in two coats.
3. All shop coating/painting of steel shall comply with SSPC-PA-1.
4. All field coating/painting of steel shall comply with SSPC-PA-1.
5. Thoroughly clean surfaces of rust, scale, grease and foreign matter prior to prime painting/coating and galvanizing.

B. Shop Priming, Shop Finishing

1. Shop Primer
   a. See Section 05 12 00 Structural Steel Framing
2. Hot-Dip Galvanizing: ASTM A123
3. PVDF Coatings: See Section 05 05 13 Shop-Applied Metal Finishes
4. Anodizing: See Section 05 05 13 Shop-Applied Metal Finishes

C. Field Finishing

1. Field Primer (Touch Ups)- See Shop Primer
2. Exterior Paint: See Section 09 91 13 Exterior Painting
3. Interior Paint: See Section 09 91 23 Interior Painting
4. Field Galvanizing: See Section 09 97 13 Steel Coatings

2.11 SOURCE QUALITY CONTROL
- A. Tests, Inspection
  - 1. Shop Welding
    - a. Welds are to be inspected by a qualified special inspector.
    - b. Inspections will be paid for by Owner.
- B. Verification of Performance

PART 3 EXECUTION

3.01 INSTALLERS
3.02 EXAMINATION
- A. Site Verification of Conditions
  - 1. Examine surfaces and work in place by others and verify that such work is in conditions appropriate to receive work of this section. Do not apply or install work of this section until unsatisfactory work of others is in a condition which will ensure the correct installation of materials and products of this section.

3.03 PREPARATION
3.04 ERECTION
3.05 INSTALLATION
- A. All metal fabrications shall be installed plumb, true to line, square and level, accurately fitted and free from distortion and defects.
- B. Temporary bracing shall be installed and shall be left in place until other means is provided to adequately brace the fabrication.
- C. Obtain approval of Architect prior to site cutting or making adjustments which are not part of intended work or are not shown on shop drawings.
- D. Make provisions for erection stresses by temporary bracing. Keep work in alignment.
- E. Replace items damaged during installation.
- F. Perform field welding in accordance with AWS D1.1.
- G. After installation, touch-up field welds and scratched and damaged paint, or coated surfaces. Use primer consistent with shop finish.
- H. Supply and assist with setting all items requiring to be cast into concrete, or embedded in masonry, complete with necessary setting templates.

3.06 APPLICATION
3.07 CONSTRUCTION
3.08 REPAIR/RESTORATION
3.09 RE-INSTALLATION
3.10 FIELD QUALITY CONTROL
- A. Site Tests, Inspection
  - 1. Field Welding
    - a. Welds are to be inspected by a qualified special inspector.
    - b. Inspections will be paid for by Owner.
- B. Manufacturers' Field Services

3.11 ADJUSTING
3.12 CLEANING
3.13 DEMONSTRATION
3.14 PROTECTION
3.15 SCHEDULES

END OF SECTION

SECTION 05 73 00
DECORATIVE METAL RAILINGS

PART 1 GENERAL

1.01 SUMMARY
- A. Section Includes
  - 1. Post Mounted Stainless Steel Handrail System
- B. Products Supplied But Not Installed Under This Section
- C. Products Installed But Not Supplied Under This Section
- D. Related Sections
- E. Allowances
- F. Unit Prices
- G. Measurement Procedures
- H. Payment Procedures
- I. Alternates

1.02 REFERENCES
- A. American National Standards Institute (ANSI)Z97.1 - Safety Performance Specifications and Methods of Test for Safety Glazing Material Used in Buildings.
- B. ASTM A240/A240M – Standard Specification for Chromium and Chromium-Nickel Stainless Steel Plate, Sheet, and Strip for Pressure Vessels and for General Applications.
- C. ASTM A554 - Standard Specification for Welded Stainless Steel Mechanical Tubing.
- D. ASTM E985 - Standard Specification for Permanent Metal Railing Systems and Rails for Buildings.
- E. National Association of Architectural Metal Manufacturers (NAAMM) AMP 503 - Finishes for Stainless Steel.

1.03 DEFINITIONS

1.04 SYSTEM DESCRIPTIONS
- A. Design Requirements, Performance Requirements
  - 1. Design railings to conform to Building Code requirements.
  - 2. Design railings to withstand following minimum loads:
    - a. 50 pounds per linear foot applied in any direction at top, transferred via attachments and supports to building structure.
    - b. Concentrated 200-pound load applied in any direction at any point along top, transferred via attachments and supports to building structure.
    - c. Uniform and concentrated loads do not need to be applied simultaneously.
  - 3. Fabricate railings in accordance with ASTM E985.

1.05 SUBMITTALS
- A. General
- B. Product Data
  - 1. Manufacturer’s descriptive data including system description, components, and finishes.

C. Shop Drawings
   1. Show railing locations, component dimensions, fabrication and assembly details, and attachments.
D. Samples
   1. Post: Minimum 18-inch tall railing system samples showing post assembly, including base plate.
   2. Rail: Minimum 12-inch long railing system samples showing hand rail, including fittings.
E. Quality Assurance/Control Submittals
   1. Design Data, Test Reports, Certificates, Manufacturers' Instructions, Manufacturers' Field Reports, Qualification Statements
F. Closeout Submittals

1.06 QUALITY ASSURANCE
A. Qualifications
   1. Installer Qualifications: Minimum 2-years documented experience in work of this Section.
   2. Engineering
      a. System components: Pre-engineered, designed by licensed Professional Structural Engineer.
      b. Attachments to building structure: Designed by Professional Structural Engineer licensed in State of California.
   3. Perform Work in accordance with ASTM E985.
B. Regulatory Requirements
   1. Top of gripping surfaces of handrails shall be 34″ minimum and 38″ maximum vertically above walking surfaces, stair nosing, and ramp surfaces. Handrails shall be at a consistent height above such surfaces.
   2. Clearance between handrail gripping surfaces and adjacent surfaces shall be 1-1/2″ minimum. Handrail may be located in a recess if the recess is 3″ maximum deep and 18″ minimum clear above the top of the handrail.
   3. Handrail gripping surfaces shall be continuous along their length and shall not be obstructed along their tops or sides. The bottoms of handrail gripping surfaces shall not be obstructed for more than 20% of their length. Where provided, horizontal projections shall occur 1-1/2″ minimum below the bottom of the handrail gripping surfaces.
   4. Handrail gripping surfaces with a circular cross section shall have an outside diameter of 1-1/4″ minimum and 2″ maximum.
   5. Handrail gripping surfaces with a non-circular cross section shall have an outside dimension of 4″ minimum and 6-1/4″ maximum, and a cross-sectional dimension of 2-1/4″ maximum.
   6. Handrail gripping surfaces and any surfaces adjacent to them shall be free of sharp or abrasive elements and shall have rounded edges.
   7. Handrails shall not rotate within their fittings.
   8. Handrails gripping surfaces shall extend beyond and in the same direction of stair flights and ramp runs in accordance with **CBC Section 11B-505.10**. Such extensions are not required for continuous handrails at the inside turn of switchback or dogleg stairs and ramps.

9. The orientation of at least one handrail shall be in the direction of the stair run, perpendicular to the direction of the stair noising, and shall not reduce the minimum required width of the stair. **CBC Section 11B-505.2.1.**
10. A 2" minimum high curb or a barrier shall be provided to prevent the passage of a 4" diameter sphere rolling off the sides of a ramp surface. Such a curb or a barrier shall be continuous and uninterrupted along the length of the ramp. **CBC Section 11B-405.9.2.**

C. Certifications
D. Field Samples
E. Mock-ups
1. Provide mockup of railing system, minimum 4-feet long x full height.
2. Show framing, handrail, attachments, and accessories.
3. Locate where directed by architect.
4. Approved mockup may remain as part of the Work.

F. Pre-installation Meetings
1. Convene pre-installation conference approximately 2-weeks prior to beginning work of this Section.
2. Attendance: Contractor, Construction Manager, Architect, railing fabricator, and railing installer.
3. Review:
a. Installation methods for frame components attaching to supporting construction.
b. Installation, adjusting, and protection of railing system.
c. Coordination with other work.

1.07 DELIVERY, STORAGE, AND HANDLING
1.08 PROJECT CONDITIONS
1.09 SEQUENCING
1.10 SCHEDULING
1.11 WARRANTY
1.12 SYSTEM STARTUP
1.13 OWNER'S INSTRUCTIONS
1.14 COMMISSIONING
1.15 MAINTENANCE

PART 2 PRODUCTS

2.01 MANUFACTURERS
A. CR Laurence Company, Inc., 2503 East Vernon Avenue, Los Angeles, CA 90058, or Equal
B. Viva Railings, 1454 Halsey Way, Carrolton, TX 75007

2.02 EXISTING PRODUCTS
2.03 MATERIALS
A. Stainless Steel
1. Shapes: ASTM A240/A240M, Type 304,316
2. Tube: ASTM A554, Type 304, 316
3. Finish: No. 6 Satin, 380-grit.

B. Posts

1. 1 1/2-inch (Nominal) Schedule 40 rail tubing, 316 stainless steel

C. Handrail

1. 1 1/2-inch (Nominal) Schedule 40 Rail Tubing, 316 stainless steel

2.04 MANUFACTURED UNITS

A. (CRL) HRS Hand Railing System

1. Post Mounted Handrail System

a. HRS Railing System, Custom Fabrication/Finishing

1. Post: 1 1/2-inch (Nominal) Schedule 40 Rail Tubing, 316 stainless steel
2. Intermediate Post Top: N/A
3. Corners: Mitered Style 90, 135, and Custom Degree Corners,
4. Mounting: Welded base flange
5. Provide matching base flange covers

b. Handrail

1. 1 1/2-inch (Nominal) Schedule 40 Rail Tubing, 316 stainless steel

B. (Viva) Equivalent Product

2.05 EQUIPMENT

2.06 COMPONENTS

2.07 ACCESSORIES

2.08 MIXES

2.09 FABRICATION

A. Shop Assembly

1. Fabricate railings in accordance with approved Shop Drawings.
2. Fabricate railings with joints located symmetrically.
3. Fabricate railings with joints tightly fitted and secured. Furnish fittings to accommodate site assembly and installation.
4. Supply components required for anchorage of railings. Fabricate anchors and related components of same material and finish as railing.
5. Conceal fastenings where possible.
6. ALL CONNECTIONS SHALL BE FULLY WELDED
7. Grind exposed welds smooth.
8. Tack welds prohibited on exposed surfaces.
9. Accommodate for expansion and contraction of members and building movement without damage to connections or members.

2.10 FINISHES

A. Shop Priming, Shop Finishing

1. Stainless Steel: NAAMM AMP 503; No. 6 satin.

2.11 SOURCE QUALITY CONTROL

PART 3 EXECUTION

3.01 INSTALLERS

3.02 EXAMINATION

3.03 PREPARATION

3.04 ERECTION

3.05 INSTALLATION

A. Install railing system in accordance with approved Shop Drawings.
B. Install components plumb and level, accurately fitted, free from distortion and defects.
C. Provide anchors for connecting railings to supporting construction.
D. Fit joints tight, flush, and hairline.
E. Installation Tolerances:
    1. Maximum variation from level or from indicated slopes: 1/4 inch in 10 feet, noncumulative.
    2. Maximum offset from true alignment of abutting members: 1/16 inch.

3.06 APPLICATION
3.07 CONSTRUCTION
3.08 REPAIR/RESTORATION
3.09 RE-INSTALLATION
3.10 FIELD QUALITY CONTROL
3.11 ADJUSTING
3.12 CLEANING
3.13 DEMONSTRATION
3.14 PROTECTION
3.15 SCHEDULES

END OF SECTION

SECTION 06 10 00
ROUGH CARPENTRY

PART 1 GENERAL

1.01 SUMMARY
- A. Section Includes
  1. Provide the work specified herein consisting of miscellaneous wood framing, sheathing, nails, bolts, screws, framing anchors and other rough hardware and needs for construction as indicated on the drawings for complete and proper installation.
  2. Plywood sheathing with fire retardant coatings
- B. Products Supplied But Not Installed Under This Section
- C. Products Installed But Not Supplied Under This Section
- D. Related Sections
- E. Allowances
- F. Unit Prices
- G. Measurement Procedures
- H. Payment Procedures
- I. Alternates

1.02 REFERENCES
- A. C.C.R., Title 24, Part 2, Chapter 23, 2019 Edition
- B. PS 20 - American Softwood Lumber Standard.
- C. American Wood Council, National Design Specifications for Wood Construction, 2018 Edition and Supplement.
- D. West Coast Lumberman's Bureau
- E. American Plywood Association
- F. Western Wood Products Association Grading Rules
- G. ASTM D245 – Current Edition, Standard Practice for Establishing Structural Grades and Related Allowable Properties for Visually Graded Lumber

1.03 DEFINITIONS

1.04 SYSTEM DESCRIPTIONS

1.05 SUBMITTALS

1.06 QUALITY ASSURANCE
- A. Qualifications
  1. Use adequate numbers of skilled personnel who are thoroughly trained and experienced in the necessary crafts and who are completely familiar with the specified requirements and the methods needed for proper performance of the work of this section.
- B. Regulatory Requirements
  1. Hardwood plywood, particleboard, and medium density fiberboard composite wood products used on the interior or exterior of the building shall meet the requirements for formaldehyde as specified in ARB's Air Toxics Control Measure (ATCM) for Composite Wood (17 C.C.R. 93120 et. seq.). Those materials not exempted by the ATCM must meet the specified emission limits as shown in C.C.R., Title 24, Part 11, Table 5.504.4.5 Formaldehyde Limits
- C. Certifications
  1. Provide lumber with visible grade stamp of an approved agency certified by NFPA.

2. Redwood shall be graded by the California Redwood Association, Redwood Inspection Service

D. Field Samples
E. Mock-ups
F. Pre-installation Meetings

1.07 DELIVERY, STORAGE, AND HANDLING
A. Packing, Shipping, Handling, and Unloading
1. Exercise care in off-loading lumber to prevent damages splitting and breaking.
2. Deliver materials at earliest date possible to allow maximum drying time on site.
B. Storage and Protection
1. Store materials at job site in a safe area, out of traffic and shored up off ground surface.
2. Identify framing lumber by grades and store grades separately from each other.
3. Protect products with adequate waterproofing.
4. Pile and strip lumber at site to allow free circulation of air with pile protected from sun and moisture.

1.08 PROJECT CONDITIONS
A. Project Environmental Requirements
1. Air-season all lumber for at least 60 days before covering with finish materials.
2. Moisture Content of sawn lumber shall not exceed 19-percent when framing starts, and sheathing is applied. Any noncompliant work shall be rejected and reframed with acceptable lumber
B. Existing Conditions

1.09 SEQUENCING
1.10 SCHEDULING
1.11 WARRANTY
1.12 SYSTEM STARTUP
1.13 OWNER'S INSTRUCTIONS
1.14 COMMISSIONING
1.15 MAINTENANCE

PART 2 PRODUCTS

2.01 MANUFACTURERS
A. Plywood Sheathing with Fire Retardant Coatings
1. Louisiana-Pacific Corporation, 414 Union Street, Suite 2000, Nashville, TN 37219 or Equal.

2.02 EXISTING PRODUCTS
2.03 MATERIALS
A. Dimensional Lumber
Unless notes otherwise on Structural Drawings:
1. Non-Load Bearing Studs, minimum DF#2
2. Top Plates, minimum DF#2
3. Sill Plates, preservative treated (PT), minimum DF#2
4. Blocking, minimum DF#2

5. Furring, minimum DF#2
6. Bracing, minimum DF#2
7. Joists, Rafters, Purlins, minimum DF#1
8. Beams and Posts, minimum DF#1
9. Load Bearing Studs < 15', minimum DF#2
10. Load Bearing Studs >15', minimum DF#1

B. Plywood Sheathing
Unless noted otherwise on Structural Drawings:
1. Exterior Stud Wall Sheathing, 5/8" APA Rated, Exposure -1
2. Roof Sheathing, 5/8" APA Rated, Exposure-1
3. Floor Sheathing, 3/4" T&G APA Rated, Exposure-1

C. Plywood Sheathing with Fire Retardant Coatings
1. (LP) Flameblock Fire-Rated OSB Sheathing

D. Architecturally Exposed Timbers
1. Members 4" nominal in the least dimension shall not contain boxed heart.

2.04 MANUFACTURED UNITS
2.05 EQUIPMENT
2.06 COMPONENTS
2.07 ACCESSORIES

A. Nails, spikes, and staples: Common (with standard lengths), except as otherwise indicated, galvanized nails at sill plates for exterior locations, high humidity within conditioned spaces, and treated wood: plain finish for other interior locations; size and type to suit application.
B. Steel hardware and stock framing connectors: ASTM A36 steel, galvanized for exterior applications, Simpson, or other approved manufacturer. Use of manufactured connectors other than specific brand and catalog no. shown on plans requires DSA approval.
C. Lag bolts and wood screws: ANSI/ASME Standards B18.2.1 and B18.6.1.
D. Machine bolts: ASTM A307.
E. Wood preservative: Wolmanizing treatment at least two weeks prior to delivery to site.

2.08 MIXES
2.09 FABRICATION
2.10 FINISHES
2.11 SOURCE QUALITY CONTROL

PART 3 EXECUTION

3.01 INSTALLERS
3.02 EXAMINATION

A. Site Verification of Conditions
1. Carefully select all members. Ensure that exposed members are free of heart center. Select members so that knots and obvious defects will not interfere with placement of bolts, proper nailing or making proper connections, and not impair achievement of proper finished appearances where to be exposed.
2. Cut out and discard defects which will render a piece unable to serve its intended function. Lumber may be rejected by architect, structural engineer, or project inspector whether or not it has been

installed, for excessive warp, twist, bow, crook, mildew, fungus, or mold, as well as for improper cutting and fitting.

3.03 PREPARATION
3.04 ERECTION
3.05 INSTALLATION
3.06 APPLICATION
3.07 CONSTRUCTION

A. General Framing

1. In addition to framing operations normal to fabrication and erection indicated on drawings. Install all wood backing for plaster screeds and control joints required for other work of other trades, and for casework, chalkboards, toilet partitions, etc. as required.
2. Set all horizontal and sloped members with crown up.
3. Non-bearing, non-shear stud walls, sills, and trimmers may be anchored to concrete with shot pins only as and where indicated on drawings. Use bolts set in concrete when edge distance at concrete is less than 3 inches. No shot pins permitted at curb conditions.
4. All wall and partition studs and mullions shall be continuous from sill to plates. Unless indicated otherwise, run at least two studs on each side of openings in stud walls for openings in exterior walls and in partition openings larger than 6 feet, and partitions from sill to plate. For additional details and larger openings, see structural drawings.
5. Double plates with all joints staggered and lapping at least four feet, and splice to bear on studs at splice joints. See Structural Drawings.
6. Install nailing blocks and backing necessary for attachment of grounds, finishes, trim, fixtures, and do all required cutting, furring, and backing for electrical, plumbing and heating pipes, fixtures, etc.
7. Frame stud partitions, furring and walls containing fire cabinets, electric panels, plumbing, heating, or other pipes to give proper clearance. Cutting of studs in bearing walls and shear walls is prohibited unless specifically detailed.
8. Fur walls for all pipes over 3/4" dia. Do not place pipes exceeding 1/3 of plate width in partitions used as bearing or plywood sheathed walls, but place them in furring completely clear of studs, unless detailed otherwise. Place approved piping in center of plates using neat hole. No notching is allowed. In no case allow pipes to pass through plates less than 5-1/2 inches wide.
9. Unless otherwise indicated, provide 2-inch by 6-inch studs at 16 inches on centers.
10. Provide cross-bridging at 8 feet on centers maximum for all joists and rafters more than 8 inches (4" at floor joists) depth. Use solid lumber blocking unless otherwise indicated.
11. Provide 1 inch by 6-inch let-in bracing (at approximately 45 degrees) every 25 feet in all stud walls not sheathed. Run continuous from top plate to sill plate. (Optional for alignment purposes only).
12. Provide all isolated posts with connections at top and bottom; Simpson CC caps or CB base unless specifically detailed otherwise.

13. Double joist under parallel partitions with solid blocking between joists over all points of support.
14. Untreated wood posts shall not be in contact with concrete; provide base per note 12 unless specifically detailed otherwise.
15. Do not cut or notch wood members unless specifically detailed on drawings.
16. Retighten all bolts, lags, screws, etc., prior to closing-in.
17. Treat all notches and cuts in treated wood with approved wood preservatives prior to closing-in.

B. Fire Stops
1. Ensure that no fire stop is less than 2 inches thick and no less in width than enclosed space within partition.
2. Provide stud wall and partitions with continuous rows of bridging or fire stops which will form a complete and effective separation in entire width of partitions, placed in such a manner that there will be no concealed air spaces greater than 8 feet in vertical dimension. Intermediate stops may be in line with opening headers. Provide furred space between stud walls and partitions with continuous fire stops at same elevation as those in the enclosing walls which must be installed horizontally, thus forming a solid stop from outside to outside of studs. At all concealed draft passages or shafts including furring spaces, ensure that maximum dimension is no more than 8 feet. Fire stop all partitions at all suspended ceilings.

C. Draft Stops
1. Construction materials shall be of the following materials:
   a. Minimum 5/8" gypsum board.
   b. Minimum 15/32" plywood sheathing.
2. Installation shall be at locations indicated on the drawings and per the following requirements:
   a. At roof-ceiling assemblies so that the area of the concealed space does not exceed 1000 sq. ft. with a maximum horizontal dimension of 60 feet.
   b. At roof-ceiling assemblies, where automatic fire sprinklers are installed in the concealed space, so that the arm of the concealed space does not exceed 3,000 sq.ft. with a maximum horizontal dimension of 100 ft.
   c. In attics, mansards, overhangs, false fronts set out from walls and similar concealed spaces so that the area between draft stops does not exceed 3000 sq.ft. with a maximum horizontal dimension of 60 ft.
3. Where automatic fire sprinklers are installed in the aforementioned spaces, the maximum area between draft stops shall be 9,000 sq.ft. with a maximum horizontal dimension of 100 feet.
4. Draft stops shall form an effective barrier in concealed attic spaces, between ceilings and the underside of roof sheathing.

D. Bearing
1. Make bearings full unless shown otherwise.
2. Finish bearing surfaces on which structural members are to rest so as to give sure and even support. Where framing members slope, cut or notch ends as required to give uniform bearing surface.

E. Shimming
1. Do not shim any framing member except where specifically shown or required by drawings.

F. Blocking
   1. Install blocking required to support all items of finish and to cut off all concealed draft openings, both vertical and horizontal, between ceiling and floor.
   2. 2x full depth solid blocking, shall be placed between joist or rafters at all supports.

G. Alignment
   1. On all framing members to receive a finished surface, align finish sub-surface to vary not more than 1/8 inch from plane of surface of adjacent framing and furring members.

H. Plywood Placement
   1. Place all plywood with face grain perpendicular to supports and continuously over at least two supports, except where otherwise detailed.
   2. Center joints accurately over support unless otherwise shown on drawings.
   3. Protect plywood from moisture until succeeding component or materials are installed to cover plywood.

I. Fastening
   1. Use nails standard lengths and gauges.
   2. For conditions not covered on drawings, provide penetration into piece receiving point not less than 1/2 length of nail or spike, provided that 16d nails may be used to connect two pieces of two inch thickness.
   3. For bolts, drill holes 1/32 inch larger in diameter than bolts being used. Drill straight and true from one side only.
   4. Bolt threads shall not bear on wood. Use washers under head and nut where both bear on wood. Use washers under all nuts.
   5. For lag screws, and wood screws, pre-bore holes same diameter as root of threads; enlarge holes for shank diameter for length of shank.
   6. Screw, do not drive, all lag screws and wood screws.
   7. Retighten bolts before closing.

3.08 REPAIR/RESTORATION
3.09 RE-INSTALLATION
3.10 FIELD QUALITY CONTROL
3.11 ADJUSTING
3.12 CLEANING
3.13 DEMONSTRATION
3.14 PROTECTION
3.15 SCHEDULES

END OF SECTION

SECTION 06 16 43
GYPSUM SHEATHING

PART 1 GENERAL

1.01 SUMMARY
- A. Section Includes
  1. Gypsum Sheathing
  2. Gypsum Sheathing accessories
- B. Products Supplied But Not Installed Under This Section
- C. Products Installed But Not Supplied Under This Section
- D. Related Sections
  1. 07 92 00 Joint Sealants
  2. 09 29 00 Gypsum Board
- E. Allowances
- F. Unit Prices
- G. Measurement Procedures
- H. Payment Procedures
- I. Alternates

1.02 REFERENCES
- A. ASTM C473 Standard Test Methods for Physical Testing of Gypsum Panel Products.
- B. ASTM C518 Standard Test Method for Steady-State Thermal Transmission Properties by Means of the Heat Flow Meter Apparatus.
- C. ASTM C630 Standard Specification for Water-Resistant Gypsum Backing Board.
- D. ASTM C840 Standard Specification for Application and Finishing of Gypsum Board.
- E. ASTM C1396 Standard Specification for Gypsum Board.
- F. ASTM C1658 Standard Specification for Glass Mat Gypsum Panels.
- G. ASTM D3273 Standard Test Method for Resistance to Growth of Mold on the Surface of Interior Coatings in an Environmental Chamber.
- H. ASTM D6329 Standard Guide for Developing Methodology for Evaluating the Ability of Indoor Materials to Support Microbial Growth Using Static Environmental Chambers.
- I. ASTM E84 Standard Test Method for Surface Burning Characteristics of Building Materials.
- J. GA-214 Recommended Levels of Gypsum Board Finish.
- K. GA-216 Application and Finishing of Gypsum Panel Products.

1.03 DEFINITIONS

1.04 SYSTEM DESCRIPTIONS

1.05 SUBMITTALS
- A. Product Data
  1. Submit manufacturer's data sheets on each product to be used, including:
     - a. Gypsum sheathing
     - b. Preparation instructions and recommendations.
     - c. Storage and handling requirements and recommendations.
     - d. Installation methods.

- B. Shop Drawings

1. Indicate details associated with fireproofing and acoustical seals, opening locations and details, and opening termination details.

C. Samples
   1. Provide samples of product.

D. Quality Assurance/Control Submittals
   1. Design Data, Test Reports, Certificates, Manufacturers' Instructions, Manufacturers' Field Reports, Qualification Statements
      a. Provide fire test reports on fire-rated wallboard assemblies. Submit copies of evidence of fire hazard classification for wallboard. Certified test reports of other acceptable testing agencies, which perform testing in accordance with ASTM E84, E90 and E119 are acceptable.
      b. Provide certification that materials meet these specifications.
      c. Provide manufacturer's printed instructions for installation of assemblies.

E. Closeout Submittals

1.06 QUALITY ASSURANCE

A. Qualifications
   1. Provide adequate numbers of skilled personnel who are thoroughly trained and experienced in the necessary crafts and who are completely familiar with the specified requirements and the methods needed for proper performance of the work in this section.

B. Regulatory Requirements
   1. Provide products labeled with third party certification stamp of fire-resistance characteristics, including ITS, UL as applicable.
   1. Provide products that comply with the following limits for surface burning characteristics when tested per ASTM E84
      1. Flame spread: 25 maximum
      2. Smoke developed: 450 maximum

C. Certifications

D. Field Samples

E. Mock-ups
   1. At a location on the site where accepted by the Architect, provide a mock-up gypsum sheathing panel.
   2. Make the panel approximately 4'-0" square.
   3. Provide one mock-up panel for each gypsum sheathing finish used on the Work.
   4. The mock-ups may be used as part of the work, and included in the finished work, when accepted by the Architect.
   5. Revise as necessary to secure the Architect's acceptance.
   6. The mock-up panels, when accepted by the Architect, will be used as datum points for comparison with the remainder of the work of this section for the purpose of acceptance or rejection.

1.07 DELIVERY, STORAGE, AND HANDLING

A. Packing, Shipping, Handling, and Unloading
   1. Deliver materials in manufacturer's unopened containers, packages or bundles identified with manufacturer's name, brand, type, and grade clearly marked.

2. Deliver fire rated materials bearing testing agency label and required fire classification number.

B. Acceptance at Site

C. Storage and Protection

1. Per GA-801, store products inside under cover and keep them dry and protected against damage from weather, direct sunlight, surface contamination, corrosion, construction traffic, and other damaging causes.
2. Neatly stack gypsum boards flat to prevent sagging.
3. Handle gypsum boards to prevent damage to edges, ends, and surfaces.
4. Protect adhesives and joint compounds from freezing or overheating per manufacturer's instructions.
5. Protect metal products from rusting.

1.08 PROJECT CONDITIONS

A. Project Environmental Requirements

1. Comply with ASTM C840 and GA-216 requirements or gypsum sheathing manufacturer's written recommendations, whichever are more stringent.
2. Do not install panels that are wet, those that are moisture damaged, and those that are mold damaged.
3. Do not install sheathing products unless installation areas comply with minimum temperature and ventilation requirements recommended by manufacturer. As a minimum, provide temperatures above 50 degrees F during and after installation.
4. Under slow drying conditions, allow additional drying time between coats of joint treatment.
5. Protect installed materials from drafts during hot, dry weather.
6. Protect metal products form rusting.

1.09 SEQUENCING

1.10 SCHEDULING

1.11 WARRANTY

A. Provide products that offer twelve months of coverage against in-place exposure damage (delamination, deterioration and decay).

B. Three years against manufacturing defects.

1.12 SYSTEM STARTUP

1.13 OWNER'S INSTRUCTIONS

1.14 COMMISSIONING

1.15 MAINTENANCE

PART 2 PRODUCTS

2.01 MANUFACTURERS

A. Georgia-Pacific Gypsum, 133 Peachtree Street, Atlanta GA 30303, or Equal.

B. United States Gypsum Company, 550 West Adams Street, Chicago, IL 60661

2.02 EXISTING PRODUCTS
2.03 MATERIALS
A. Gypsum Sheathing – Moisture and mold-resistant
1. (GP) DensGlass Fireguard Sheathing
a. Thickness: 5/8-inch, Type X
b. Width: 4-feet
c. Length: 8-feet min.
d. Edges: Square (Exterior walls), Tapered (Interior walls)
2. (USG) SHEETROCK Brand Glass-Mat Sheathing, Fire Code X
a. Thickness: 5/8-inch, Type X
b. Width: 4-feet
c. Length: 8-feet min.
d. Edges: Square (Exterior walls), Tapered (Interior walls)
B. Fasteners:
1. Metal Framing: ASTM C1002.
2. Wood Framing: ASTM C1002.
3. Steel Drill Screws: ASTM C 954.
C. Joint System (Interior Walls)
1. Tape, bedding compound, topping compound: ASTM C 475.
D. Trims
1. Metal Beads: ASTM C1047; formed galvanized steel angle, minimum base steel 0.014-inch thick, sizes as required to suit substrate.
2. Metal Edge/casing bead: ASTM C1047; formed galvanized steel trim, minimum base steel 0.014-inch thick, sizes as required to suit substrate.
3. Metal Control Joints: ASTM C1047; roll-formed zinc control joints with perforations in flanges; center channel with removable tape strip over channel.

2.04 MANUFACTURED UNITS
2.05 EQUIPMENT
2.06 COMPONENTS
2.07 ACCESSORIES
2.08 MIXES
2.09 FABRICATION
2.10 FINISHES
2.11 SOURCE QUALITY CONTROL

PART 3 EXECUTION

3.01 INSTALLERS
3.02 EXAMINATION
A. Site Verification of Conditions
1. Examine areas and conditions under which Work of this Section will be performed. Correct conditions detrimental to timely and proper completion of Work. Do not proceed until unsatisfactory conditions are corrected.
2. Examine substrates to which gypsum board construction attaches or abuts. Verify pre-set hollow metal frames, cast-in anchors, and structural framing for compliance with requirements for installation tolerances and other conditions affecting performance of gypsum sheathing construction.

3.03 PREPARATION

3.04 ERECTION

3.05 INSTALLATION

A. Install and finish gypsum sheathing to comply with ASTM C840 and GA-216.

1. Locate exposed end-butt joints as far from center of walls and ceilings as possible, and stagger not less than 24 inches in alternate courses of board.
2. Install ceiling boards across framing in the manner which minimizes the number of end-butt joints, and which will avoid end joints in the central area of each ceiling. Stagger end joints a minimum of 24 inches.
3. Install wall and partition boards vertically unless otherwise noted.
4. Install exposed gypsum sheathing with face side out. Do not install imperfect, damaged, or damp boards. Butt boards together for a light contact at edges and ends with not more than 1/8-inch open space between boards. Do not force into place.
5. Locate either edge or end joints over supports, except in horizontal applications or where intermediate supports or gypsum board back-blocking is provided behind end joints. Position boards so that like edges abut, tapered edges against tapered edges, and mill-cut or field-cut ends against mill-cut or field-cut ends. Do not place tapered edges against cut edges or ends. Stagger vertical joints over different studs on opposite sides of partitions.
6. Attach gypsum sheathing to studs so that leading edge or end of each board is attached to open (unsupported) edge of stud flange first.
7. Attach gypsum sheathing to supplementary framing and blocking provided for additional support at openings and cut-outs.
8. Form control joints and expansion joints at locations indicated on Drawings, and as recommended by Gypsum Association, with space between edges of boards prepared to receive trim accessories.
9. Maximum distance between control joints: 30 linear feet.
10. Cover both faces of stud partition framing with gypsum board in concealed spaces (above ceilings, etc.), except in chase walls that are properly braced internally.
11. Fit gypsum sheathing around ducts, pipes, and conduits.
12. Where partitions intersect open concrete coffers, cut gypsum sheathing to fit profile of coffers and allow 1/4 to ½-inch wide joint for sealant.
13. Isolate perimeter of non-load bearing drywall partitions at structural abutments. Provide 1/4 to ½-inch space and trim edge with "U" bead edge trim. Seal joints with acoustical sealant.
14. Where sound-rated drywall construction is indicated on Drawings, seal construction at perimeters, control and expansion joints, openings, and penetrations with a continuous bead of acoustical sealant including a bead at both faces of partitions. Comply with ASTM C919 and manufacturer's recommendations for location of edge trim, and close off sound-flanking paths around or through construction, including sealing of partitions above acoustical ceilings.
15. For double-layer partition systems, construction above acoustical plaster ceilings may be installed with base layer only.

16. Space fasteners in gypsum sheathing per referenced gypsum sheathing application and finishing standard and manufacturer's recommendations.
17. Curved Gypsum Partitions and Surfaces: Install gypsum sheathing panels horizontally with wrapped edges perpendicular to metal framing per manufacturer's recommendations.

B. Not Used

C. Accessories (Interior Walls)
1. Where feasible, use the same fasteners to anchor trim accessory flanges as required to fasten gypsum board to the supports. Otherwise, fasten flanges to comply with manufacturer's recommendations.
2. Install metal corner beads at external corners.
3. Install metal edge trim whenever edge of gypsum sheathing would otherwise be exposed or semi-exposed, except where plastic trim is indicated on Drawings. Provide type with face flange to receive joint compound except where "U" bead (semi-finishing type) is indicated.
4. Install gypsum sheathing reveals where indicated on Drawings.
5. Install control joints at locations indicated on Drawings, or if not indicated, at spacing and locations required by referenced gypsum sheathing application and finish standard and approved by Architect for visual effect.

D. Joint Treatment (Interior Walls)
1. Inspect areas to be joint treated, verifying that the gypsum sheathing fits snugly against supporting framework.
2. In areas where joint treatment and compound finishing will be performed, maintain a temperature of not less than 55 degrees F for 24 hours prior to commencing the treatment, and until joint and finishing compounds have dried.
3. Apply the joint treatment and finishing compound by machine or hand tool.
4. Provide a minimum drying time of 24 hours between coats, with 5. additional drying time in poorly ventilated areas.
5. Embedding Compounds
   a. Apply to gypsum sheathing joints and fastener heads in a thin uniform layer.
   b. Spread the compound not less than 3 inches wide at joints, center the reinforcing tape in the joint, and embed the tape in the compound. Then, spread a thin layer of compound over the tape.
   c. After this treatment has dried, apply a second coat of embedding compound to joints and fastener heads, spreading in a thin uniform coat to not less than 6 inches wide at joints. Feather edges.
   d. Sand between coats.
   e. When thoroughly dry, sandpaper to eliminate ridges and high points.
6. Finishing Compounds:
   a. After embedding compound is thoroughly dry and has been completely sanded, apply a coat of finishing compound to joints and fastener heads.

b. Feather the finishing compound to not less than 12 inches wide.
c. When thoroughly dry, sandpaper to obtain a uniform smooth surface, taking care to not scuff the paper surface of the board.

E. Level of Finish
1. See 3.15 Schedules

3.06 APPLICATION
3.07 CONSTRUCTION
3.08 REPAIR/RESTORATION
3.09 RE-INSTALLATION
3.10 FIELD QUALITY CONTROL
A. Maximum Variation of Finished Gypsum sheathing Surface from True Flatness: 1/8 inch in 10 feet in any direction.

3.11 ADJUSTING
3.12 CLEANING
A. In addition to other requirements for cleaning, use necessary care to prevent scattering gypsum sheathing scraps and dust, and to prevent tracking gypsum and joint finishing compound onto floor surfaces.
B. At completion of each segment of installation in a room or space, promptly pick up and remove scraps, debris, and surplus materials of this Section from working area.

3.13 DEMONSTRATION
3.14 PROTECTION
A. Provide final protection and maintain conditions that ensure gypsum sheathing construction being without damage or deterioration at time of Substantial Completion.

3.15 SCHEDULES
A. Level of finish shall be as per Gypsum Association publication, GA-214 as noted herein.
1. Sand between each coat of compound as required to remove ridges and other imperfections.
2. Where fire resistance rating is required, level of finish shall meet fire rating requirement.
3. Level of finish
a. Type 0: **Exterior Sheathing**
1. No taping, finishing or accessories required.
b. Interior Walls – See Section 09 29 00 Gypsum Board

END OF SECTION

SECTION 07 13 26
SELF-ADHERING SHEET WATERPROOFING

PART 1 GENERAL

1.01 SUMMARY
- A. Section Includes
  - 1. Self-adhesive, rubberized asphalt water-proofing membranes for elevator pits, retaining walls, and sub-structures.
- B. Products Supplied But Not Installed Under This Section
- C. Products Installed But Not Supplied Under This Section
- D. Related Sections
  - 1. 03 30 00 Cast-In-Place Concrete
  - 3. 04 22 00 Concrete Unit Masonry
- E. Allowances
- F. Unit Prices
- G. Measurement Procedures
- H. Payment Procedures
- I. Alternates

1.02 REFERENCES
- A. ASTM C 836-Standard Specification for High Solids, Cold Liquid-Applied Elastomeric Waterproofing Membrane for Use with Separate Wearing Course
- B. ASTM D 412-Standard Test Methods for Rubber Properties in Tension
- C. ASTM D 570-Standard Test Method for Water Absorption of Plastics
- D. ASTM D 882-Standard Test Methods for Tensile Properties of Thin Plastic Sheeting
- E. ASTM D 903-Standard Test Method for Peel or Stripping Strength of Adhesive Bonds
- F. ASTM D 1876-Standard Test Method for Peel Release of Adhesives (T-Peel)
- G. ASTM D 1970-Standard Specification for Self-Adhering Polymer Modified Bituminous Sheet Materials Used as Steep Roofing Underlayment for Ice Dam Protection
- H. ASTM D 3767-Standard Practice for Rubber - Measurements of Dimensions
- I. ASTM D 5385-Standard Test Method for Hydrostatic Pressure Resistance of Waterproofing Membranes
- J. ASTM E 96-Standard Test Methods for Water Vapor Transmission of Materials
- K. ASTM E 154-Standard Test Methods for Water Vapor Retarders Used in Contact with Earth Under Concrete Slabs, on Walls, or as Ground Cover

1.03 DEFINITIONS

1.04 SYSTEM DESCRIPTIONS
- A. Design Requirements, Performance Requirements
  - 1. Provide waterproofing membrane systems for below-grade vertical and horizontal applications, around pits, soil-side of retaining walls, and where indicated on drawings.

1.05 SUBMITTALS
- A. Product Data
  - 1. Submit manufacturer’s product data,
- B. Shop Drawings
- C. Samples

1. Submit minimum 6-inch x 6-inch sheet membrane sample

D. Quality Assurance/Control Submittals
   1. Design Data, Test Reports, Certificates, Manufacturers' Instructions, Manufacturers' Field Reports, Qualification Statements
      a. Submit manufacturers' Installation instructions, use limitations and recommendations.
      b. Submit manufacturer's certification of data indicating V.O.C. content of all components of waterproofing system.

E. Closeout Submittals

1.06 QUALITY ASSURANCE

A. Qualifications
   1. Sheet membrane waterproofing shall be manufactured by a firm with a minimum of 20-years' experience in the production and sales of self-adhesive sheet membrane waterproofing.
   2. Sheet membrane waterproofing shall be installed by a firm which has at least 3-years' experience in work of the type required by this section.

B. Regulatory Requirements

C. Certifications

D. Field Samples

E. Mock-ups

F. Pre-installation Meetings
   1. A pre-installation conference shall be held prior to commencement of field operations to establish procedures to maintain optimum working conditions and to coordinate this work with related and adjacent work. Agenda for meeting shall include review of special details and flashing.

1.07 DELIVERY, STORAGE, AND HANDLING

A. Packing, Shipping, handling, and Unloading
   1. Deliver materials and products in labeled packages.
   2. Sequence deliveries to avoid delays but minimize on-site storage.

B. Acceptance at Site

C. Storage and Protection
   1. Store and handle in strict compliance with manufacturer's instructions, recommendations and material safety data sheets.
   2. Protect from damage from sunlight, weather, excessive temperatures and construction operations.
   3. Do not double-stack pallets of membrane on the job site. Provide cover on top and all sides, allowing for adequate ventilation.
   4. Protect mastic and adhesive from moisture and potential sources of ignition.

D. Waste Management and Disposal
   1. Remove damaged material from the site and dispose of in accordance with applicable regulations.

1.08 PROJECT CONDITIONS

A. Project Environmental Requirements
   1. Perform work only when existing and forecasted weather conditions are within the limits established by the manufacturer of the materials and products used.

2. Proceed with installation only when substrate construction and preparation work is complete and in condition to receive sheet membrane waterproofing.

1.09 SEQUENCING
1.10 SCHEDULING
1.11 WARRANTY
A. Provide written 5-year material warranty issued by the membrane manufacturer upon completion of the work.

1.12 SYSTEM STARTUP
1.13 OWNER'S INSTRUCTIONS
1.14 COMMISSIONING
1.15 MAINTENANCE

PART 2 PRODUCTS

2.01 MANUFACTURERS
A. Grace, 7500 Grace Drive, Columbia, MD 21044, or Equal
B. W.R. Meadows, Inc., P.O. Box 338, Hampshire, IL 60140

2.02 EXISTING PRODUCTS
2.03 MATERIALS
A. Below Grade:
1. (Grace) Bituthene 3000 below grade waterproofing
2. (W.R. Meadows) MEL-ROL
B. Above Grade:
1. (Grace) Bituthene 3000 above grade waterproofing

2.04 MANUFACTURED UNITS
2.05 EQUIPMENT
2.06 COMPONENTS
2.07 ACCESSORIES
A. (Grace) Bituthene Primer WP-3000
B. (W.R. Meadows) MEL-PRIME
C. Bituthene Liquid Membrane filet
D. Bituthene Liquid Membrane termination
E. Miscellaneous Materials: Surface conditioner, mastic, liquid membrane, tape and accessories specified or acceptable to manufacturer of sheet membrane waterproofing.

2.08 MIXES
2.09 FABRICATION
2.10 FINISHES
2.11 SOURCE QUALITY CONTROL

PART 3 EXECUTION

3.01 INSTALLERS
A. The installer shall examine conditions of substrates and other conditions under which this work is to be performed and notify the contractor, in writing, of circumstances detrimental to the proper completion of the

work. Do not proceed with work until unsatisfactory conditions are corrected.

3.02 EXAMINATION

3.03 PREPARATION

A. Refer to manufacturer's literature for requirements for preparation of substrates. Surfaces shall be structurally sound and free of voids, spalled areas, loose aggregate and sharp protrusions. Remove contaminants such as grease, oil and wax from exposed surfaces. Remove dust, dirt, loose stone and debris. Use repair materials and methods which are acceptable to manufacturer of sheet membrane waterproofing.

B. Cast-In-Place Concrete Substrates:

1. Do not proceed with installation until concrete has properly cured and dried (minimum 7 days for normal structural concrete and minimum 14 days for lightweight structural concrete).
2. Fill form tie rod holes with concrete and finish flush with surrounding surface.
3. Repair bugholes over 13 mm (0.5 in.) in length and 6 mm (0.25 in.) deep and finish flush with surrounding surface.
4. Remove scaling to sound, unaffected concrete and repair exposed area.
5. Grind irregular construction joints to suitable flush surface.

C. Masonry Substrates: Apply waterproofing over concrete block and brick with smooth trowel-cut mortar joints or parge coat.

D. Wood Substrates: Apply waterproofing membrane over securely fastened sound surface. All joints and fasteners shall be flush to create a smooth surface.

E. Related Materials: Treat joints and install flashing as recommended by waterproofing manufacturer.

3.04 ERECTION

3.05 INSTALLATION

A. Refer to manufacturer's literature for recommendations on installation, including but not limited to, the following:

1. Apply primer at rate recommended by manufacturer. Recoat areas not waterproofed if contaminated by dust. Mask and protect adjoining exposed finish surfaces to protect those surfaces from excessive application of primer.
2. Delay application of membrane until primer is completely dry. Dry time will vary with weather conditions.
3. Seal daily terminations with troweled bead of mastic.

3.06 APPLICATION

A. Priming

1. Apply primer by spray or roller at a coverage rate of 500–600 ft2 /gal. Allow to dry one hour or until concrete returns to original color.
2. Do not apply primer to bituthene membrane

3.07 CONSTRUCTION

3.08 REPAIR/RESTORATION

3.09 RE-INSTALLATION

3.10 FIELD QUALITY CONTROL

A. Site Tests, Inspection

1. Once systems are installed, water test application. Perform in such a way that watertight integrity is fully demonstrated. Allow architect and Owner to witness this test. Correct defects, then re-test. Continue this procedure until no leaks exist.

3.11 ADJUSTING

3.12 CLEANING

A. Remove any masking materials after installation. Clean any stains on materials which would be exposed in the completed work.

3.13 DEMONSTRATION

3.14 PROTECTION

A. Protect completed membrane waterproofing from subsequent construction activities as recommended by manufacturer.

3.15 SCHEDULES

END OF SECTION

SECTION 07 16 16
CRYSTALLINE WATERPROOFING

PART 1 GENERAL

1.01 SUMMARY
- A. Section Includes
  - 1. Cementitious Crystaline Waterproofing
- B. Products Supplied But Not Installed Under This Section
- C. Products Installed But Not Supplied Under This Section
- D. Related Sections
  - 1. 03 30 00 Cast-In-Place Concrete
- E. Allowances
- F. Unit Prices
- G. Measurement Procedures
- H. Payment Procedures
- I. Alternates

1.02 REFERENCES

1.03 DEFINITIONS

1.04 SYSTEM DESCRIPTIONS
- A. Design Requirements, Performance Requirements
  - 1. Concrete waterproofing and protection system shall be of the crystalline type that is a blend of Portland cement, fine treated silica sand and active proprietary chemicals. When mixed with water and applied as a cementitious coating, the active chemicals diffuse into the concrete and cause a catalytic reaction which generates a non-soluble crystalline structure within the pores and capillary tracts of concrete. This crystalline system causes the concrete to become sealed against the penetration of liquids from any direction, and protects the concrete from deterioration due to harsh environmental conditions. The system is used for above or below-grade walls and slabs, including liquid retaining structures and where enhanced chemical resistance is required.

1.05 SUBMITTALS
- A. General
  - 1. Submit listed submittals in accordance with conditions of the Contract and with Division 1 Submittal Procedures Section.
- B. Product Data
  - 1. Submit product data, including manufacturer’s specifications, installation instructions, and general recommendations for waterproofing applications.
- C. Shop Drawings
- D. Samples

E. Quality Assurance/Control Submittals
   1. Test Reports: Submit for acceptance, complete test reports from approved independent testing laboratories certifying that waterproofing system conforms to performance characteristics and testing requirements specified herein.
   2. Manufacturer's Certification: Provide document signed by manufacturer or manufacturer's representative certifying that the materials to be installed comply with the requirements of this specification.
   3. Manufacturer's Field Report: Provide copy of report from manufacturer's representative confirming that the surfaces to which waterproofing material is to be applied are in a condition suitable to receive same.
F. Closeout Submittals

1.06 QUALITY ASSURANCE
A. Qualifications
   1. Manufacturer Qualifications: Manufacturer shall be ISO 9001 registered, and shall have no less than 10 years experience in manufacturing the cementitious crystalline waterproofing materials for the required work. Manufacturer must be capable of providing field service representation during construction phase. Manufacturers who cannot provide ongoing field support or the performance test data specified herein will not be considered for the project.

   2. Applicator: Waterproofing applicator shall be experienced in the installation of cementitious crystalline waterproofing materials as demonstrated by previous successful installations, and shall be approved by the manufacturer in writing.

B. Regulatory Requirements
C. Certifications
   1. Technical Consultation: The waterproofing manufacturer's representative shall provide technical consultation on waterproofing application and provide on-site support as needed.
D. Field Samples
E. Mock-ups
F. Pre-installation Meetings
   1. Prior to installation of waterproofing, conduct meeting with waterproofing applicator, Architect/Engineer, owner's representative, and waterproofing manufacturer's representative to verify and review the following:
      a. Project requirements for waterproofing as set out in Contract Document.
      b. Manufacturer's product data including application instructions.
      c. Substrate conditions, and procedures for substrate preparation and waterproofing installation.

1.07 DELIVERY, STORAGE, AND HANDLING
- A. Packing, Shipping, Handling, and Unloading
  - 1. In accordance with manufacturer's guidelines.
- B. Acceptance at Site
- C. Storage and Protection
  - 1. In accordance with manufacturer's guidelines.
- D. Waste Management and Disposal

1.08 PROJECT CONDITIONS
- A. Project Environmental Requirements
  - 1. Comply with manufacturer's product data regarding condition of substrate to receive waterproofing, weather conditions before and during installation, and protection of the installed waterproofing system.
- B. Existing Conditions

1.09 SEQUENCING
1.10 SCHEDULING
1.11 WARRANTY
1.12 SYSTEM STARTUP
1.13 OWNER'S INSTRUCTIONS
1.14 COMMISSIONING
1.15 MAINTENANCE

PART 2 PRODUCTS

2.01 MANUFACTURERS
- A. Xypex Chemical Corporation, 13731 Mayfield Place, Richmond, B.C., Canada V6V 2G9, or Equal.

2.02 EXISTING PRODUCTS
2.03 MATERIALS
- A. (Xypex) Crystalline waterproofing materials as follows:
  - 1. Xypex Concentrate
  - 2. Xypex Modified
  - 3. Xypex Patch'n Plug

2.04 MANUFACTURED UNITS
2.05 EQUIPMENT
2.06 COMPONENTS
2.07 ACCESSORIES
2.08 MIXES
2.09 FABRICATION
2.10 FINISHES
2.11 SOURCE QUALITY CONTROL

PART 3 EXECUTION

3.01 INSTALLERS

3.02 EXAMINATION

A. Site Verification of Conditions

1. Site Visit: Prior to waterproofing installation, arrange visit to project site with waterproofing manufacturer's representative. Representative shall inspect and certify that concrete surfaces are in acceptable condition to receive waterproofing treatment.
2. Verification of Substrates: Verify that concrete surfaces are sound and clean, and that form release agents and materials used to cure the concrete are fully removed.
3. Examination for Defects: Examine surfaces to be waterproofed for defects such as honeycombing, rock pockets, faulty construction joints and cracks. Such defects to be repaired in accordance to manufacturer's product data and installation instructions.

3.03 PREPARATION

A. Protection

B. Surface Preparation

1. In accordance with manufacturer's instructions.

3.04 ERECTION

3.05 INSTALLATION

3.06 APPLICATION

1. In accordance with manufacturer's instructions.

3.07 CONSTRUCTION

3.08 REPAIR/RESTORATION

3.09 RE-INSTALLATION

3.10 FIELD QUALITY CONTROL

A. Site Tests, Inspection

1. Testing for Tanks and Foundation Works
   a. Testing: Fill tanks or, for foundation works, shut off dewatering system as soon as practical so that the structure shall be exposed to it's normal service conditions. Examine for leaks.
   b. Monitoring:
      1. Actively leaking cracks and joints shall be left to self-heal for as long as practical. Depending on job site and ambient conditions crack healing can be expected to take several days to weeks.
      2. Any crack or joints that do not heal in the allowable time frame shall be repaired by the general contractor.
      3. Moving cracks shall be repaired using polyurethane injection or other appropriate method.
   c. Repair: Use product to repair procedures to seal any static crack or joint that does not self-heal.

B. Manufacturers' Field Services

3.11 ADJUSTING

3.12 CLEANING

3.13 DEMONSTRATION
3.14 PROTECTION
3.15 SCHEDULES

END OF SECTION

SECTION 07 19 00
WATER REPELLENTS

PART 1 GENERAL

1.01 SUMMARY
- A. Section Includes
  - 1. Water repellent coating applied to exterior concrete masonry and cast-in-place concrete surfaces.
- B. Products Supplied But Not Installed Under This Section
- C. Products Installed But Not Supplied Under This Section
- D. Related Sections
  - 1. 03 30 00 Cast-In-Place Concrete
  - 1. 04 22 00 Concrete Unit Masonry
- E. Allowances
- F. Unit Prices
- G. Measurement Procedures
- H. Payment Procedures
- I. Alternates

1.02 REFERENCES

1.03 DEFINITIONS

1.04 SYSTEM DESCRIPTIONS
- A. Design Requirements, Performance Requirements
  - 1. Meets ASTM-C309, Type 1 Class A and B for curing compounds.

1.05 SUBMITTALS
- A. General
- B. Product Data
  - 1. Submit manufacturer's technical data sheet for products specified.
- C. Shop Drawings
- D. Samples
- E. Quality Assurance/Control Submittals
  - 1. Design Data, Test Reports, Certificates, Manufacturers' Instructions, Manufacturers' Field Reports, Qualification Statements
    - a. Submit manufacturer's certification of conformance to specified surface preparation and application rates.
    - b. Submit test results of initial and final RILEM test and final spray test.
- F. Closeout Submittals

1.06 QUALITY ASSURANCE
- A. Qualifications
  - 1. Manufacturer: Company specializing in manufacturing Products specified with minimum 5 years documented experience.
  - 2. Applicator: Company specializing in performing the work of this Section with minimum 5 years documented experience.
- B. Regulatory Requirements
  - 1. Comply with applicable rules and regulations of Pollution-Control Regulatory Agency having jurisdiction regarding volatile organic compounds (VOC) and use of hydrocarbon solvents.
- C. Certifications

D. Field Samples
   1. Prior to water repellent application, apply water repellent coating to field mock-up sample.
   2. Apply water repellent at an initial rate of application as determined by the manufacturer as presumed necessary to pass the RILEM water tube uptake test results specified.
   3. Allow seven days for the sample to cure. Perform a RILEM water tube uptake test on the treated area conducted by or supervised by the manufacturer's representative. Place one tube on the block surface and one tube on a mortar joint.
   4. Results: Absorption shall be not less than 1.0 milliliter of water using a RILEM water uptake tube at 60 mph wind driven rain equivalent. Apply additional repellent when tests results indicate failing results and retest until passing tests are achieved.
   5. Coverage rate for entire project shall be that which is used to for the mock-up sample passing test.

E. Mock-ups

F. Pre-installation Meetings

1.07 DELIVERY, STORAGE, AND HANDLING

A. Packing, Shipping, Handling, and Unloading

B. Acceptance at Site

C. Storage and Protection
   1. Protect coating liquid from freezing.

D. Waste Management and Disposal

1.08 PROJECT CONDITIONS

A. Project Environmental Requirements
   1. Do not apply Product during the following conditions:
      a. Both ambient and surface temperatures are below 40 degrees F.
      c. Substrate surfaces have cured less than 30 days.
      d. Rain or temperatures below 40 degrees F are predicted for a period of 24 hours.
      e. Surface moisture readings as measured by an electronic moisture meter exceed 20%.

B. Existing Conditions

1.09 SEQUENCING

1.10 SCHEDULING

1.11 WARRANTY

A. General contractor must provide a written manufacturer's warranty prior to project completion. Said warranty from manufacturer will include replacement of materials and labor to repair any deficiencies reported for a period of no less than ten (10) years. Said warranty must be in writing from the coatings manufacturer. Applicator must provide a one year performance and workmanship warranty for one year.

1.12 SYSTEM STARTUP

1.13 OWNER'S INSTRUCTIONS

1.14 COMMISSIONING

1.15 MAINTENANCE

PART 2 PRODUCTS

2.01 MANUFACTURERS
- A. Rainguard International, 3334 East Coast Highway #134, Corona del Mar, CA 92625, or Equal.

2.02 EXISTING PRODUCTS

2.03 MATERIALS
- A. (Rainguard) Mirco-Seal with Graffiti Control Water Repellent/Anti-Graffiti

2.04 MANUFACTURED UNITS

2.05 EQUIPMENT

2.06 COMPONENTS

2.07 ACCESSORIES

2.08 MIXES

2.09 FABRICATION

2.10 FINISHES

2.11 SOURCE QUALITY CONTROL

PART 3 EXECUTION

3.01 INSTALLERS

3.02 EXAMINATION
- A. Site Verification of Conditions
  1. Examine surfaces and adjacent areas where products will be applied and verify that surfaces conform to specifications and manufacturer's requirements for substrate conditions. Do not proceed until satisfactory conditions have been corrected.
  2. Verify joint sealants are installed and cured.
  3. Beginning of application indicates acceptance of substrate conditions.

3.03 PREPARATION
- A. Protection
- B. Surface Preparation
  1. Surface cracks, holes, or other imperfections that exceed 1/64 of an inch shall be filled with pointing mortar. Masonry joints found to be unsound, hollow, or otherwise defective shall be raked out to a depth of 1/2 inch and pointed with mortar.
  2. Remove loose particles and foreign matter. Remove oil or foreign substance with a cleaning agent which will not affect coating.
  3. Scrub and rinse surfaces with water, and let dry.
  4. Protect adjacent surfaces not scheduled to receive coating. If applied on unscheduled surfaces, remove immediately, by approved method.
  5. Protect landscaping, property, and vehicles from over spray and drift.

3.04 ERECTION

3.05 INSTALLATION

3.06 APPLICATION
- A. Do not apply until masonry mortar is cured for seven days.

B. Apply coating in accordance with manufacturer's published instructions, using appropriate method and coverage rate.
C. A minimum of (2) two coats are required.

3.07 CONSTRUCTION
3.08 REPAIR/RESTORATION
3.09 RE-INSTALLATION
3.10 FIELD QUALITY CONTROL
A. Site Tests, Inspection
B. Manufacturers' Field Services
1. Provide services of a manufacturer-authorized technical service representative to inspect and approve the substrate before application, to instruct the applicator on the product and application method to be used, and to field test the in-place surfaces after application.
2. Spray Test: After water repellent has dried, spray coated surfaces with water. After surfaces have adequately dried, recoat surfaces that show water absorption.
3. Water Uptake Test: Perform a RILEM Water Uptake test on a minimum of 10 locations on the completed project to confirm conformance to minimum results stated in Part 1 hereinbefore. Conduct test on upper and lower portions of the masonry surfaces and on an equal number of joints and block surfaces. Tests shall be conducted by the manufacturer's representative.
4. Furnish written certification that surface preparation and rate of application is completed in accordance with specification requirements and the manufacturer's recommendations. Furnish results of in-place RILEM and spray test.

3.11 ADJUSTING
3.12 CLEANING
A. Immediately clean water repellent from adjoining surfaces soiled or damaged by water repellent application as work progresses.
B. Repair damage caused by water repellent application.
C. Comply with manufacturer's published instructions for cleaning.

3.13 DEMONSTRATION
3.14 PROTECTION
3.15 SCHEDULES

END OF SECTION

SECTION 07 21 00
BATT INSULATION

PART 1 GENERAL

1.01 SUMMARY
- A. Section Includes
  1. Batt Insulation (Mineral Fiber)
  2. Blanket/Safing Insulation (Mineral Fiber)
  3. Insulation Accessories
- B. Products Supplied But Not Installed Under This Section
- C. Products Installed But Not Supplied Under This Section
- D. Related Sections
- E. Allowances
- F. Unit Prices
- G. Measurement Procedures
- H. Payment Procedures
- I. Alternates

1.02 REFERENCES
- A. C.C.R., Title 24, Part 2, 2019 Edition
- B. ASTM C423 - Standard Test Method for Sound Absorption and Sound Absorption Coefficients by the Reverberation Room Method.
- C. ASTM C518 - Standard Test Method for Steady-State Thermal Transmission Properties by Means of the Heat Flow Meter Apparatus.
- D. ASTM C553 - Standard Specification for Mineral Fiber Blanket Thermal Insulation for Commercial and Industrial Applications.
- E. ASTM E84 - Standard Test Method for Surface Burning Characteristics of Building Materials.
- F. ASTM E119 - Standard Test Methods for Fire Tests of Building Construction and Materials.
- G. ASTM E814 - Standard Test Method for Fire Tests of Through-Penetration Fire Stops.

1.03 DEFINITIONS

1.04 SYSTEM DESCRIPTIONS

1.05 SUBMITTALS
- A. General Requirements
- B. Product Data
  1. Submit manufacturer's product data for materials specified.
- C. Shop Drawings
- D. Samples
- E. Quality Assurance/Control Submittals
  1. Design Data, Test Reports, Certificates, Manufacturers' Instructions, Manufacturers' Field Reports, Qualification Statements
     - a. Submit manufacturer's storage and handling requirements and recommendations.
     - b. Submit manufacturer's preparation instructions and recommendations.
     - c. Submit manufacturer's installation methods.
     - d. Submit manufacturer's certifications that products meet or exceed specified requirements.

F. Closeout Submittals

1.06 QUALITY ASSURANCE

A. Qualifications
   1. Manufacturer shall have a minimum of ten (10) years' experience manufacturing products specified.
   2. Installer shall have a minimum five (5) years' experience successfully installing insulation on projects of similar type and scope.

B. Regulatory Requirements
   1. Fire-Test-Response Characteristics
      a. Batt insulation shall comply with the following surface-burning characteristics as determined by testing identical products per ASTM E84 by UL or another testing and inspecting agency acceptable to authorities having jurisdiction:
         1. Flame-Spread Index: 25 or less (Class A)
         2. Smoke-Developed Index: 450 or less

C. Certifications

D. Field Samples

E. Mock-ups
   1. Provide a mock-up for evaluation of surface preparation techniques and application workmanship.
   2. Mock-up areas shall be designated by Architect, min. 20 sf of area for wall and 20 sf of area for roof.
   3. Installer shall not proceed with remaining work until workmanship is reviewed and approved by Architect.
   4. Refinish mock-up areas as required to produce acceptable work.

F. Pre-installation Meetings

1.07 DELIVERY, STORAGE, AND HANDLING

A. Packing, Shipping, Handling, and Unloading
   1. Deliver products in manufacturer's unopened packaging bearing the brand name and manufacturer's identification until ready for installation.
   2. Handle materials to avoid damage.

B. Acceptance at Site

C. Storage and Protection
   1. Store products in manufacturer's unopened packaging bearing the brand name and manufacturer's identification until ready for installation.
   2. Store materials in dry locations with adequate ventilation, free from water, and in such manner to permit easy access for inspection and handling.

D. Waste Management and Disposal

1.08 PROJECT CONDITIONS

A. Project Environmental Requirements
   1. Maintain temperature, humidity, and ventilation within limits recommended by manufacturer.
   2. Do not install products under environmental conditions outside manufacturer's absolute limits.

B. Existing Conditions

1.09 SEQUENCING
1.10 SCHEDULING
1.11 WARRANTY
1.12 SYSTEM STARTUP
1.13 OWNER'S INSTRUCTIONS
1.14 COMMISSIONING
1.15 MAINTENANCE

PART 2 PRODUCTS

2.01 MANUFACTURERS
- A. Thermal Batt Insulation/Acoustic Batt Insulation (Mineral Fiber)
  - 1. Thermafiber, 3711 Mill Street, Wabash, IN 46992, or Equal.
  - 2. Rock Wool Manufacturing Company, Leeds, AL, 35094
- B. Blanket/Safing Insulation (Mineral Fiber)
  - 1. Thermafiber, 3711 Mill Street, Wabash, IN 46992, or Equal.
  - 2. Rock Wool Manufacturing Company, Leeds, AL, 35094

2.02 EXISTING PRODUCTS
2.03 MATERIALS
- A. Thermal Batt Insulation/Acoustical Batt Insulation (Mineral Fiber)
  - 1. Stud Walls
    - a. (Thermafiber) UltraBatt Formaldehyde-Free (FF) Insulation
      - 1. R-Value: R23
      - 2. Facing: Unfaced
      - 3. Flame Spread/Smoke Developed Index: Class A
  - 2. Roof/Ceiling Joists
    - a. (Thermafiber) UltraBatt FF Insulation
      - 1. R-Value: Min. R30 & R15
      - 2. Facing: Unfaced (When concealed by finish ceiling), Foil Faced (When exposed to view, U.R.F.)
      - 3. Flame Spread/Smoke Developed Index: Class A
    - b. (JM) Equivalent Product
    - c. (Certain Teed) Equivalent Product
- B. Blanket/Safing Insulation (Mineral Fiber)
  - 1. (Thermafiber) SAFB Mineral Wool Insulation
    - a. Thickness: 1-1/2" min.
    - b. Facing: Unfaced
    - c. Density: 2.5 pcf min.
    - d. Flame Spread/Smoke Developed Index: Class A
  - 2. (RockWool) Equivalent Product
- C. Insulation Accessories
  - 1. Sag Wires
    - a. Minimum 18-gauge galvanized wire
    - b. 16-inches on center spacing
  - 2. Impaling Pins and Self-Locking Washers
    - a. Perforated Base Insulation Hanger
      - 1. Material: 12-gauge galvanized steel
      - 2. Pin Length: As required
      - 3. Washer Size: 1-1/2-inch minimum diameter
      - 4. Adhesive: As recommended by manufacturer

2.04 MANUFACTURED UNITS
2.05 EQUIPMENT
2.06 COMPONENTS
2.07 ACCESSORIES
2.08 MIXES
2.09 FABRICATION
2.10 FINISHES
2.11 SOURCE QUALITY CONTROL

PART 3 EXECUTION

3.01 INSTALLERS
3.02 EXAMINATION
- A. Site Verification of Conditions
  1. Do not begin installation until substrates have been properly prepared.
  2. Verify that all exterior and interior wall, partition, and floor/ceiling assembly construction has been completed to the point where the insulation may correctly be installed.
  3. Verify that mechanical and electrical services in ceilings, walls and floors have been installed and tested and, if appropriate, verify that adjacent materials are dry and ready to receive insulation.
  4. If substrate preparation is the responsibility of another installer, notify Architect of unsatisfactory preparation before proceeding.

3.03 PREPARATION
- A. Protection
- B. Surface Preparation
  1. Clean surfaces thoroughly prior to installation.
  2. Prepare surfaces using the methods recommended by the manufacturer for achieving the best result for the substrate under the project conditions.

3.04 ERECTION
3.05 INSTALLATION
- A. Install in accordance with manufacturer's instructions.
- B. Install in spaces without gaps or voids.
- C. Do not compress insulation.
- D. Trim insulation neatly to fit spaces. Insulate miscellaneous gaps and voids.
- E. Fit insulation tight in spaces and tight to exterior side of mechanical and electrical services within plane of insulation.
- F. Ensure secure attachment so that insulation will not sag over time. Friction fitting is not sufficient. Mechanically attach all insulation. Double-sided tape attachment is not acceptable.
- G. Where insulated walls are being left unfinished, install sag wires to support insulation.
- H. Where insulation is being installed using impaling pins, ensure that washers are installed over pins after insulation is in place. Space pins as necessary to provide insulation installation which will not sag over time, and as recommended in writing by insulation manufacturer.

3.06 APPLICATION
3.07 CONSTRUCTION

3.08 REPAIR/RESTORATION
3.09 RE-INSTALLATION
3.10 FIELD QUALITY CONTROL
3.11 ADJUSTING
3.12 CLEANING
3.13 DEMONSTRATION
3.14 PROTECTION
A. Protect installed products until completion of project.
B. Touch-up, repair or replace damaged products before Substantial Completion.

3.15 SCHEDULES

END OF SECTION

SECTION 07 21 16
ROOF BOARD INSULATION

PART 1 GENERAL

1.01 SUMMARY
- A. Section Includes
  1. Roof Board Insulation
  2. Tapered Roof Board Insulation
  3. Fasteners and Accessories
  4. Cant Strips
- B. Products Supplied But Not Installed Under This Section
- C. Products Installed But Not Supplied Under This Section
- D. Related Sections
  1. 07 54 00 Thermoplastic Membrane Roofing
- E. Allowances
- F. Unit Prices
- G. Measurement Procedures
- H. Payment Procedures
- I. Alternates

1.02 REFERENCES
- A. ASTM C 578: Standard Specification for Rigid Cellular Polystyrene Thermal Insulation.
- B. ASTM C 518: Standard Test Method for Steady-State Thermal Transmission Properties by Means of the Heat Flow Meter Apparatus.
- C. ASTM E 84: Standard Test Method for Surface Burning Characteristics of Building Materials.
- D. International Code Council Evaluation Service (ICC-ES), Evaluation Report.
- E. UL 790 Standard for Standard Test methods for Fire Tests of Roof Coverings

1.03 DEFINITIONS

1.04 SYSTEM DESCRIPTIONS
- A. Design Requirements, Performance Requirements
  1. Component of a Class A Roof System – UL 790.

1.05 SUBMITTALS
- A. General
- B. Product Data
  1. Submit manufacturer’s product data for all items specified.
- C. Shop Drawings
  1. Submit shop drawings showing scaled plans and sections indicating panel layouts, configurations, tapered cricket layouts, attachment points, and spot elevations.
- D. Samples
  1. Submit manufacturer’s standard sample sizes for all items specified.
- E. Quality Assurance/Control Submittals
  1. Design Data, Test Reports, Certificates, Manufacturers’ Instructions, Manufacturers’ Field Reports, Qualification Statements
- F. Closeout Submittals

1.06 QUALITY ASSURANCE
- A. Qualifications
- B. Regulatory Requirements
  1. Provide products that comply with the following limits for surface burning characteristics when tested per ASTM E84
     1. Flame spread: 75 maximum
     2. Smoke developed: 450 maximum
- C. Certifications
  1. Each insulation board must be labeled with manufacturer's name, product brand name, ASTM material specification reference, and I dentification of the third-party inspection agency used for building code qualification.
- D. Field Samples
- E. Mock-ups
- F. Pre-installation Meetings

1.07 DELIVERY, STORAGE, AND HANDLING
- A. Packing, Shipping, Handling, and Unloading
  1. Deliver materials in manufacturer’s original packaging.
- B. Acceptance at Site
- C. Storage and Protection
  1. Store and protect products in accordance with manufacturer’s instructions. Store in a dry area and protect from water, direct sunlight, flame, and ignition sources. Do not install insulation that has been damaged or wet.
  2. In the event the board insulation becomes wet, wipe dry prior to installation.
- D. Waste Management and Disposal

1.08 PROJECT CONDITIONS
1.09 SEQUENCING
1.10 SCHEDULING
1.11 WARRANTY
1.12 SYSTEM STARTUP
1.13 OWNER’S INSTRUCTIONS
1.14 COMMISSIONING
1.15 MAINTENANCE

PART 2 PRODUCTS

2.01 MANUFACTURERS
- A. Roof Board Insulation
  1. Hunter Panels, 15 Franklin Street, Portland, ME 04101, or equal.
  2. Atlas Roofing, 40 S. 45th Ave., Phoenix, AZ 85043
- B. Fasteners
  1. SFS Group USA, Inc., PO Box 6326 US-Wyomissing, PA 19610 or equal.
  2. OMG Roofing Products, 153 Bowles Road, Agawam, MA 01001
- C. Cant Strips
  1. GAF Materials Corp., 1180 Industry Ave., Fontana, CA 92337, or equal.

2.02 EXISTING PRODUCTS

2.03 MATERIALS
- A. Roof Board Insulation (Flat)
  - 1. (Hunter) H-Shield
    - a. ASTM C1289 Type II, Class 3, 25 psi
    - b. Polyisocyanurate
  - 2. (Atlas) Equivalent Product
- B. Roof Board Insulation (Tapered)
  - 1. (Hunter) Tapered H-Shield
    - a. ASTM C1289 Type II, Class 3, 25 psi
    - b. Polyisocyanurate
  - 2. (Atlas) Equivalent Product
- C. Fasteners
  - 1. (SFS) Dekfast 12 fasteners with plates,
  - 2. (OMG) #12 Standard Roofgrip with OMG 3" Round Metal Plates
  - 3. (OMG) Heavy Duty Fasteners with OMG 3" Round Metal Plates
  - 4. (OMG) Accutrac Hextra fasteners and Accutrac Plates
- D. Cant Strips
  - 1. (GAF) Perlite Cant Strip
    - a. 1-1/2-inch x 4-inch nominal

2.04 MANUFACTURED UNITS
2.05 EQUIPMENT
2.06 COMPONENTS
2.07 ACCESSORIES
2.08 MIXES
2.09 FABRICATION
2.10 FINISHES
2.11 SOURCE QUALITY CONTROL

PART 3 EXECUTION

3.01 INSTALLERS
3.02 EXAMINATION
- A. Site Verification of Conditions
  - 1. Do not begin installation until substrates have been properly prepared.
  - 2. Examine roof deck for suitability to receive insulation. Verify that substrate is dry, clean, and free of foreign material that will damage insulation installation.
  - 3. Verify that roof drains, scuppers, roof curbs, nailers, equipment supports, vents, and other roof accessories are secured properly and installed in conformance with drawings and submittals.
  - 4. Verify that deck is structurally sound to support installers, materials, and equipment without damaging or deforming work.
  - 5. If substrate preparation is the responsibility of another installer, notify Architect of unsatisfactory preparation before proceeding.

3.03 PREPARATION
- A. Protection

B. Surface Preparation
   1. Clean surfaces thoroughly prior to installation.
   2. Prepare surfaces using the methods recommended by the manufacturer for achieving the best result for the substrate under the project conditions.

3.04 ERECTION

3.05 INSTALLATION

A. Install specified insulation in accordance with manufacturer's latest printed instructions and as required by governing codes.

B. Do not leave installed insulation exposed to weather. Cover and waterproof immediately after installation.

C. Seal exposed insulation joints at the end of each day. Remove seal when work resumes.

D. Remove installed insulation that has become wet or damaged and replace with new solid and dry insulation material.

3.06 APPLICATION

3.07 CONSTRUCTION

3.08 REPAIR/RESTORATION

3.09 RE-INSTALLATION

3.10 FIELD QUALITY CONTROL

3.11 ADJUSTING

3.12 CLEANING

A. Remove trash and construction debris from insulation before application of roofing membrane.

3.13 DEMONSTRATION

3.14 PROTECTION

A. Protect installed products until completion of project.

B. Protect installed insulation traffic by use of protective covering materials during and after installation.

C. Cover the top and edges of unfinished roof panel work to protect it from the weather and to prevent accumulation of water in the cores of the panels. Only apply enough insulation per day that can be covered by the finished roofing system.

D. Do not leave panels exposed to moisture. Wet panels shall be removed or allowed to completely dry prior to application of roof covering.

E. Repair or replace damaged products before Substantial Completion.

3.15 SCHEDULES

END OF SECTION

SECTION 07 25 00
WATER-RESISTIVE BARRIERS

PART 1 GENERAL

1.01 SUMMARY
- A. Section Includes
  1. Water-Resistive Barrier
  2. Water-Resistive Barrier Seam Tape
  3. Water-Resistive Barrier Flashing (Self-Adhering)
  4. Water-Resistive Barrier Fasteners
- B. Products Supplied But Not Installed Under This Section
- C. Products Installed But Not Supplied Under This Section
- D. Related Sections
  1. 06 10 00 Rough Carpentry
  3. 07 62 00 Sheet Metal Flashing and Trim
  4. 07 65 26 Self-Adhering Sheet Flashing
  5. 09 24 00 Portland Cement Plaster
- E. Allowances
- F. Unit Prices
- G. Measurement Procedures
- H. Payment Procedures
- I. Alternates

1.02 REFERENCES
1. ASTM C920 Standard Specification for Elastomeric Joint Sealants
2. ASTM C1193 Standard Guide for Use of Joint Sealants
3. ASTM D882 Test Method for Tensile Properties of Thin Plastic Sheeting
4. ASTM D1117 Standard Guide for Evaluating Non-woven Fabrics
5. ASTM E84 Test Method for Surface Burning Characteristics of Building Materials
6. ASTM E96 Test Method for Water Vapor Transmission of Materials
7. ASTM E1677 Specification for Air Retarder Material or System for Framed Building Walls
8. ASTM E2178 Test Method for Air Permeance of Building Materials
9. ASTM E2357 Standard Test Method for Determining Air Leakage of Air Barrier Assemblies
10. AATCC – American Association of Textile Chemists and Colorists, Test Method 127 Water Resistance: Hydrostatic Pressure Test
11. TAPPI Test Method T-410; Grams of Paper and Paperboard (Weight per Unit Area)
12. TAPPI Test Method T-460; Air Resistance (Gurley Hill Method)

1.03 DEFINITIONS

1.04 SYSTEM DESCRIPTIONS
- A. Design Requirements, Performance Requirements
  1. Water-Resistive Barrier shall be spunbonded polyolefin, non-woven, and non-perforated.
  2. Water-Resistive Barrier shall meet the following testing requirements:
     a. Air Penetration: 0.001 cfm/ft2 at 75 Pa, when tested in accordance with ASTM E2178. Type I per ASTM E1677. ≤0.04

cfm/ft2 at 75 Pa, when tested in accordance with ASTM E2357

b. Water Vapor Transmission: 28 perms, when tested in accordance with ASTM E96, Method B.
c. Water Penetration Resistance: 280 cm when tested in accordance with AATCC Test Method 127.
d. Basis Weight: 2.7 oz/yd2, when tested in accordance with TAPPI Test Method T-410.
e. Air Resistance: Air infiltration at >1500 seconds, when tested in accordance with TAPPI Test Method T-460.
f. Tensile Strength: 38/35 lbs/in., when tested in accordance with ASTM D882, Method A.
g. Tear Resistance: 12/10 lbs., when tested in accordance with ASTM D1117.
h. Surface Burning Characteristics: Class A, when tested in accordance with ASTM E 84. Flame Spread: 25, Smoke Developed: 450.
i. Ultra Violet Light Characteristics (UV), min. 120 days without degradation.

1.05 SUBMITTALS

A. General
B. Product Data
   1. Submit manufacturer's current technical data for each item specified.
C. Shop Drawings
D. Samples
   1. Submit manufacturer's standard sample sizes for all items specified, min. 8.5" x 11"
E. Quality Assurance/Control Submittals
   1. Design Data, Test Reports, Certificates, Manufacturers' Instructions, Manufacturers' Field Reports, Qualification Statements
      a. Submit manufacturer's testing reports indicating product compliance with specified requirements.
      b. Submit manufacturer's published installation instructions.
      c. Submit manufacturer's site reports from authorized field service representative, indicating observation of Water-Resistive Barrier assembly installation.
F. Closeout Submittals
   1. Submit manufacturer's executed warranty form with signatures and endorsements indicating date of substantial completion.

1.06 QUALITY ASSURANCE

A. Qualifications
   1. Installer shall have experience with installation of commercial Water-Resistive Barrier assemblies under similar conditions.
   2. Installer shall be a Water-Resistive Barrier manufacturer trained and certified installer.
   3. Installation shall be in accordance with Water-Resistive Barrier manufacturer's installation guidelines and recommendations.
   4. Water-Resistive Barrier and Water-Resistive Barrier accessory materials shall be produced by same manufacturer.

B. Regulatory Requirements
C. Certifications
D. Field Samples
E. Mock-ups
    1. Install mock-up using approved Water-Resistive Barrier assembly including fasteners, flashing, tape and related accessories per manufacturer's current printed instructions and recommendations.
    2. Mock-up size shall be a min. of 10-feet by 10-feet.
    3. Mock-up substrate shall match wall assembly construction, including window openings.
    4. Approved mock-up may remain as part of the work.
    5. Manufacturer's representative shall make a visual inspection and analysis of mock-up installation.
F. Pre-installation Meetings
    1. Hold a pre-installation conference, two weeks prior to start of Water-Resistive Barrier installation. Attendees shall include Contractor, Architect, Engineer, Installer, Owner's Representative, and Water-Resistive Barrier Manufacturer's designated representative.
    2. Review all related project requirements and submittals, status of substrate work and preparation, areas of potential conflict and interface, availability of Water-Resistive Barrier assembly materials and components, installer's training requirements, equipment, facilities and scaffolding, and coordinate methods, procedures and sequencing requirements for full and proper installation, integration and protection.

1.07 DELIVERY, STORAGE, AND HANDLING
A. Packing, Shipping, Handling, and Unloading
    1. Deliver all materials and components in manufacturer's original, unopened, undamaged containers with identification labels intact.
B. Acceptance at Site
C. Storage and Protection
    1. Store all materials as recommended by Water-Resistive Barrier manufacturer.
D. Waste Management and Disposal

1.08 PROJECT CONDITIONS
1.09 SEQUENCING
1.10 SCHEDULING
1.11 WARRANTY
1.12 SYSTEM STARTUP
1.13 OWNER'S INSTRUCTIONS
1.14 COMMISSIONING
1.15 MAINTENANCE

PART 2 PRODUCTS

2.01 MANUFACTURERS
A. DuPont, 4417 Lancaster Pike, Chestnut Run Plaza 728, Wilmington, DE 19805, or Equal.

2.02 EXISTING PRODUCTS

2.03 MATERIALS

A. Water-Resistive Barrier
   1. (Dupont) Tyvek Commercial Wrap

B. Water-Resistive Barrier - Second Layer (for Portland Cement Plaster Finish)
   1. (Dupont) Tyvek Commercial Wrap D

C. Water-Resistive Barrier Seam Tape
   1. (Dupont) Tyvek Tape, 3-inch wide

D. Water-Resistive Barrier Flashing (Self-Adhering)
   1. (Dupont) FlexWrap NF
   2. (Dupont) StraightFlash and Straight Flash VF

E. Water-Resistive Barrier Fasteners
   1. (DuPont) Tyvek Wrap Cap Screws, 1-5/8 inch corrosion resistant screw with 2-inch diameter plastic cap or manufacturer approved equal.

F. Water-Resistive Barrier Sealants
   1. In conformance with ASTM C920, compatible with Water-Resistive Barrier and accepted by Water-Resistive Barrier manufacturer.

G. Water-Resistive Barrier Adhesives and Primers
   1. Compatible with and accepted by Water-Resistive Barrier manufacturer.

2.04 MANUFACTURED UNITS
2.05 EQUIPMENT
2.06 COMPONENTS
2.07 ACCESSORIES
2.08 MIXES
2.09 FABRICATION
2.10 FINISHES
2.11 SOURCE QUALITY CONTROL

PART 3 EXECUTION

3.01 INSTALLERS
3.02 EXAMINATION

A. Site Verification of Conditions
   1. Verify substrate and surface conditions are in accordance with Water-Resistive Barrier manufacturer recommended tolerances prior to installation of Water-Resistive Barrier and accessories.

3.03 PREPARATION
3.04 ERECTION
3.05 INSTALLATION

A. General
   1. Install all components in accordance with manufacturer's installation instructions.

B. Water-Resistive Barrier
   1. Install Water-Resistive Barrier over exterior face of exterior wall substrate in accordance with manufacturer recommendations.
   2. Install Water-Resistive Barrier prior to installation of windows and doors.
   3. Start Water-Resistive Barrier installation at a building corner, leaving 6-12 inches of Water-Resistive Barrier extended beyond corner to overlap.

4. Install Water-Resistive Barrier in a horizontal manner starting at the lower portion of the wall surface with subsequent layers installed in a shingling manner to overlap lower layers. Maintain Water-Resistive Barrier plumb and level.
5. Sill Plate Interface: Extend lower edge of Water-Resistive Barrier over sill plate interface 3-6 inches. Secure to sill flashing or weep screed as recommended by Water-Resistive Barrier manufacturer.
6. Window and Door Openings: Extend Water-Resistive Barrier completely over openings.
7. Water-Resistive Barrier Overlapping:
    a. Exterior corners: minimum 12-inches.
    b. Seams: minimum 6-inches.
8. Water-Resistive Barrier Attachment:
    a. (Gypsum Sheathing Substrate) Attach Water-Resistive Barrier to studs through exterior sheathing. Secure using Water-Resistive barrier manufacturer recommended fasteners.
    b. (Wood Sheathing Substrate) Attach Water-Resistive Barrier to exterior sheathing. Secure using Water-Resistive Barrier manufacturer recommended fasteners.
9. Apply a continuous 4-inch strip of Water-Resistive Barrier self-adhering flashing behind all cladding girts.

C. Water-Resistive Barrier Seaming
1. Seal seams of Water-Resistive Barrier with seam tape at all vertical and horizontal overlapping seams.
2. Seal any tears or cuts as recommended by Water-Resistive Barrier manufacturer.

D. Opening Preparation
1. Flush cut Water-Resistive Barrier at edge of sheathing around full perimeter of opening.
2. Cut a head flap at 45-degree angle in the Water-Resistive Barrier at window head to expose 8 inches of sheathing. Temporarily secure Water-Resistive Barrier flap away from sheathing with tape.

E. Water-Resistive Barrier Flashing
1. Install in accordance with manufacturer's instructions.

3.06 APPLICATION
3.07 CONSTRUCTION
3.08 REPAIR/RESTORATION
3.09 RE-INSTALLATION
3.10 FIELD QUALITY CONTROL
A. Site Tests, Inspection
B. Manufacturers' Field Services
1. Notify manufacturer's designated representative to obtain required periodic observations of Water-Resistive Barrier assembly installation.

3.11 ADJUSTING
3.12 CLEANING
3.13 DEMONSTRATION
3.14 PROTECTION
A. Protect installed Water-Resistive Barrier from damage.

3.15 SCHEDULES

END OF SECTION

SECTION 07 26 16
BELOW-GRADE VAPOR RETARDERS

PART 1 GENERAL

1.01 SUMMARY
- A. Section Includes
  - 1. Under-Slab Vapor Retarder
  - 2. Under-Slab Vapor Retarder Accessories
- B. Products Supplied But Not Installed Under This Section
- C. Products Installed But Not Supplied Under This Section
- D. Related Sections
  - 1. 03 30 00 Cast-In-Place Concrete
- E. Allowances
- F. Unit Prices
- G. Measurement Procedures
- H. Payment Procedures
- I. Alternates

1.02 REFERENCES
- A. ASTM E 1745 Standard Specification for Plastic Water Vapor Retarders Used in Contact with Soil or Granular Fill Under Concrete Slabs.
- B. ASTM E 154 Standard Test Methods for Water Vapor Retarders Used in Contact with Earth Under Concrete Slabs, on Walls, or as Ground Cover.
- C. ASTM E 96 Standard Test Methods for Water Vapor Transmission of Materials.
- D. ASTM F 1249 Standard Test Method for Water Vapor Transmission Rate Through Plastic Film and Sheeting Using a Modulated Infrared Sensor.
- E. ASTM E 1643 Standard Practice for Installation of Water Vapor Retarders Used in Contact with Earth or Granular Fill Under Concrete Slabs.
- F. ASTM D1709 - 09 Standard Test Methods for Impact Resistance of Plastic Film by the Free-Falling Dart Method.
- G. ACI 302.2R-06 Guide for Concrete Slabs that Receive Moisture-Sensitive Flooring Materials.
- H. ACI 302.1R-15 Guide to Concrete Floor and Slab Construction

1.03 DEFINITIONS

1.04 SYSTEM DESCRIPTIONS
- A. Design Requirements, Performance Requirements
  - 1. Vapor retarder must have all of the following qualities:
    - a. Permeance of less than 0.01 Perms [grains/(ft2 · hr · inHg)] as tested in accordance with ASTM E 1745 Section 7.
    - b. Strength: ASTM E 1745 Class A.
    - c. Thickness: 15 mils minimum

1.05 SUBMITTALS
- A. Product Data
  - 1. Submit manufacturer’s product data.
- B. Shop Drawings
- C. Samples
  - 1. Submit manufacturer’s samples.
- D. Quality Assurance/Control Submittals

1. Design Data, Test Reports, Certificates, Manufacturers' Instructions, Manufacturers' Field Reports, Qualification Statements
    a. Summary of test results as per paragraph 9.3 of ASTM E 1745.
    b. Manufacturer's installation instructions for placement, seaming and penetration repair instructions.
    c. Manufacturer's installation instructions for placement, seaming, penetration and repair, and perimeter seal per ASTM E1643.

E. Closeout Submittals

1.06 QUALITY ASSURANCE

A. Qualifications
1. Use an experienced installer and adequate number of skilled personnel who are thoroughly trained and experienced in the application of the vapor retarder.
2. Obtain vapor retarder materials from a single manufacturer regularly engaged in manufacturing the product.

B. Regulatory Requirements
1. Provide products which comply with all state and local regulations controlling use of volatile organic compounds (VOCs).

C. Certifications

D. Field Samples

E. Mock-ups

F. Pre-installation Meetings
1. Convene one week prior to installation of under slab vapor retarder.
    a. Attendees to be as follows: - Architect, Engineer, General Contractor, Vapor Retarder Installer, and Vapor Retarder Manufacturer to discuss the application in detail.

1.07 DELIVERY, STORAGE, AND HANDLING

1.08 PROJECT CONDITIONS

A. Project Environmental Requirements
1. Product shall not be subject to abuse or permanent exposure to the elements.
2. Do not apply on frozen ground.

B. Existing Conditions

1.09 SEQUENCING

1.10 SCHEDULING

1.11 WARRANTY

1.12 SYSTEM STARTUP

1.13 OWNER'S INSTRUCTIONS

1.14 COMMISSIONING

1.15 MAINTENANCE

PART 2 PRODUCTS

2.01 MANUFACTURERS

A. Stego Industries LLC, 216 Avenida Fabricante, #101, San Clemente, CA 92672, or equal.

2.02 EXISTING PRODUCTS
2.03 MATERIALS
A. Vapor Retarder
1. (Stego) Stego Wrap Class A Vapor Barrier (15 mil.)
b. Accessories
1. Seam Tape: Stego Tape
2. Vapor Mastic (Penetrations sealer): Stego Mastic
3. Slab Tape: Stego Crete Claw, Tape 6"
4. Perimeter Tape: StegoTack Tape 2"

2.04 MANUFACTURED UNITS
2.05 EQUIPMENT
2.06 COMPONENTS
2.07 ACCESSORIES
2.08 MIXES
2.09 FABRICATION
2.10 FINISHES
2.11 SOURCE QUALITY CONTROL

PART 3 EXECUTION

3.01 INSTALLERS
3.02 EXAMINATION
A. Site Verification of Conditions
1. Examine surfaces to receive membrane. Notify architect if surfaces are not acceptable. Do not begin surface preparation or application until unacceptable conditions have been corrected.

3.03 PREPARATION
A. Protection
B. Surface Preparation
1. Prepare surfaces in accordance with manufacturer's instructions.
2. Level, tamp, or roll earth or granular material beneath the slab base.

3.04 ERECTION
3.05 INSTALLATION
A. Install vapor retarder in accordance with manufacturer's instructions and ASTM E 1643, latest edition.
1. Unroll vapor retarder with the longest dimension parallel with the direction of the concrete placement.
2. Lap vapor retarder over footings and seal to foundation walls.
3. Overlap joints min. 6 inches and seal with manufacturer's tape.
4. Seal all penetrations (including pipes) per manufacturer's instructions.
5. No penetration of the vapor retarder is allowed except for reinforcing steel and permanent utilities.
6. Repair damaged areas by cutting patches of vapor barrier, overlapping damaged area 6 inches and taping all sides with tape.

3.06 APPLICATION
3.07 CONSTRUCTION
3.08 REPAIR/RESTORATION

3.09 RE-INSTALLATION
3.10 FIELD QUALITY CONTROL
A. Contact Manufacturer's representative to schedule a pre-construction meeting and to coordinate a review, in-person or digital, of the vapor barrier installation.

3.11 ADJUSTING
3.12 CLEANING
3.13 DEMONSTRATION
3.14 PROTECTION
3.15 SCHEDULES

END OF SECTION

SECTION 07 50 01
GYPSUM ROOF BOARD

PART 1 GENERAL

1.01 SUMMARY
- A. Section Includes
  - 1. Fiberglass mat faced gypsum roof boards
- B. Products Supplied But Not Installed Under This Section
- C. Products Installed But Not Supplied Under This Section
- D. Related Sections
- E. Allowances
- F. Unit Prices
- G. Measurement Procedures
- H. Payment Procedures
- I. Alternates

1.02 REFERENCES
- A. ASTM C472 Standard Test Methods for Physical Testing of Gypsum, Gypsum Plasters and Gypsum Concrete.
- B. ASTM C473 Standard Test Methods for Physical Testing of Gypsum Panel Products.
- C. ASTM C518 Standard Test Method for Steady-State Thermal Transmission Properties by Means of the Heat Flow Meter Apparatus.
- D. ASTM C840 Standard Specification for Application and Finishing of Gypsum Board.
- E. ASTMC1177 Standard Specification for Glass Mat Gypsum Substrate for Use as Sheathing.
- F. ASTM E84 Standard Test Method for Surface Burning Characteristics of Building Materials
- G. ASTM E96 Standard Test Methods for Water Vapor Transmission of Materials.
- H. ASTM E108 Standard Test Methods for Fire Tests of Roof Coverings
- I. ASTM E661 Standard Test Method for Performance of Wood and Wood-Based Floor and Roof Sheathing Under Concentrated Static and Impact Loads.

1.03 DEFINITIONS

1.04 SYSTEM DESCRIPTIONS
- A. Design Requirements, Performance Requirements
  - 1. Gypsum Roof Boards shall be manufactured to meet ASTM C1177.

1.05 SUBMITTALS
- A. General Requirements: Reference section 01 33 00 Submittal Procedures
- B. Product Data
  - 1. Submit manufacturer’s product data for each product specified.
- C. Shop Drawings
  - 1. Submit shop drawings indicating fastener and adhesive patterns for wind uplift resistance.
- D. Samples
- E. Quality Assurance/Control Submittals

1. Design Data, Test Reports, Certificates, Manufacturers' Instructions, Manufacturers' Field Reports, Qualification Statements
    a. Submit manufacturer's installation instructions for each product specified.

F. Closeout Submittals

1.06 QUALITY ASSURANCE

A. Qualifications

B. Regulatory Requirements

1. Provide products that comply with the following limits for surface burning characteristics when tested per ASTM E84:
    a. Flame spread: 0
    b. Smoke developed: 0

C. Certifications

D. Field Samples

E. Mock-ups

F. Pre-installation Meetings

1.07 DELIVERY, STORAGE, AND HANDLING

A. Packing, Shipping, Handling, and Unloading

1. Deliver materials to the job site in manufacturer's original packaging, containers, and bundles with manufacturer's brand name and identification intact and legible.

B. Acceptance at Site

C. Storage and Protection

1. Gypsum roof boards must remain dry prior to installation; the materials must be properly handled upon receipt.
2. Remove any plastic packaging from all products immediately upon receipt of delivery. Failure to remove plastic packaging may result in entrapment of condensation or moisture, which may cause application problems.
3. Any protective, plastic factory packaging that is used to wrap gypsum roof boards for shipment is intended to provide temporary protection from moisture exposure during transit only and is not intended to provide protection during storage after delivery.
4. Products stored outside must be stored level and off the ground and protected by a waterproof covering. Provide means for air circulation around and under stored bundles of gypsum roof boards. Use adequate supports to keep the bundles flat, level, and dry.

D. Waste Management and Disposal

1.08 PROJECT CONDITIONS

A. Project Environmental Requirements

1. Gypsum roof boards must be protected from exposure to moisture before, during and after installation.
2. Care should also be taken during installation to avoid the accumulation of moisture in the system.
3. Gypsum roof boards must be covered the same day as installed.
4. Avoid application of gypsum roof boards during rain, heavy fog and any other conditions that may deposit moisture on the surface, and avoid the overuse of non-vented, direct-fired heaters during winter months.

B. Existing Conditions

1.09 SEQUENCING
1.10 SCHEDULING
1.11 WARRANTY
1.12 SYSTEM STARTUP
1.13 OWNER'S INSTRUCTIONS
1.14 COMMISSIONING
1.15 MAINTENANCE

PART 2 PRODUCTS

2.01 MANUFACTURERS
A. Georgia-Pacific Building Products, 133 Peachtree Street NE, Atlanta, GA 30303, or equal.
B. United States Gypsum Company, 550 West Adams Street, Chicago, IL 60661

2.02 EXISTING PRODUCTS
2.03 MATERIALS
A. Horizontal Applications
1. (GP) DensDeck Prime
a. Thickness: 1/2 inch. Min.
b. Width: 4 feet.
c. Length: 8 feet.
d. Weight: 2.0 lb/sq. ft.
e. Surfacing: Fiberglass mat with non-asphaltic coating.
f. Flexural Strength, Parallel (ASTM C473): 80 lbf, minimum.
g. Flute Span (ASTM E661): 5 inches.
h. Permeance (ASTM E96): greater than 23 perms.
i. R-Value (ASTM C518): 0.56
j. Water Absorption: 5% max.
k. Compressive Strength (Applicable Sections of ASTM C472): 900 pounds per square inch.
l. Surface Water Absorption (ASTM C473): Not more than 1 grams.
2. (USG) Securock Brand Glass-Mat Roof Board
B. Non-Horizontal Applications
1. (GP) DensDeck Prime
a. Thickness: 1/2 inch.
b. Width: 4 feet.
c. Length: 8 feet.
d. Weight: 2.0 lb/sq. ft.
e. Surfacing: Fiberglass mat with non-asphaltic coating.
f. Flexural Strength, Parallel (ASTM C473): 80 lbf, minimum.
g. Flute Span (ASTM E661): 5 inches.
h. Permeance (ASTM E96): greater than 23 perms.
i. R-Value (ASTM C518): 0.56.
j. Water Absorption (ASTM C1177): 5% max.
k. Compressive Strength (Applicable Sections of ASTM C472): 900 pounds per square inch.
l. Surface Water Absorption (ASTM C473): Not more than 1 grams.
2. (USG) Securock Brand Glass-Mat Roof Board

2.04 MANUFACTURED UNITS
2.05 EQUIPMENT
2.06 COMPONENTS
2.07 ACCESSORIES
2.08 MIXES
2.09 FABRICATION
2.10 FINISHES
2.11 SOURCE QUALITY CONTROL

PART 3 EXECUTION

3.01 INSTALLERS
3.02 EXAMINATION
3.03 PREPARATION
- A. Protection
- B. Surface Preparation
  1. Product must be dry prior to commencing installation of hot asphalt application, with free moisture content less than 1% by weight using a moisture meter that has been set to the gypsum scale.

3.04 ERECTION
3.05 INSTALLATION
- A. Use maximum lengths possible to minimize number of joints. Support edge joints with deck ribs. Stagger end joints of adjacent lengths of gypsum roof board panels. Ends and edges are typically loosely butted.
- B. Adhered or mechanically attach as recommended by roof system manufacturer.
- C. When mechanically attached, conform to manufacturer’s fastener patters.
  1. Fasteners should be installed in strict compliance with the roof system manufacturer’s installation recommendations
  2. Roof board shall be mechanically fastened to the deck with approved fasteners and plates at a rate according to the manufacturers, FM's recommendations for fastening rates and patterns.
  3. The quantity and locations of the fasteners and plates shall also cause the roof boards to rest evenly on the roof deck/substrate so that there are no significant and avoidable air spaces between the boards and the substrate.
  4. Each board shall be installed tightly against the adjacent boards on all sides. Additional fastening of protection board may be required at building perimeters as required by Factory Mutual.
  5. Fasteners are to be installed consistently in accordance with fastener manufacturer's recommendations. Fasteners are to have minimum penetration into structural deck recommended by the fastener manufacturer and Membrane Manufacturer.
  6. Use fastener tools with a depth locator and torque-limiting attachment as recommended or supplied by fastener manufacturer to ensure proper installation
- D. Apply only as many gypsum roof boards as can be covered by a roof membrane system in the same day.

E. Gypsum roof boards of any thickness do not require gapping when used as a cover board. Board edges and ends should be butted in typical installations.
F. When installed on a structural metal deck, edge joints should be located on and parallel to top flutes, so that edges are supported.
G. Roof boards shall be neatly cut to fit around penetrations and projections.

3.06 APPLICATION
A. When applying solvent-based adhesives or primers, allow sufficient time for the solvent to flash off to avoid damage to roofing components.
B. Gypsum roof boards should not be subjected to abnormal or excessive loads or foot traffic, such as, but not limited to, use on plaza decks or under steel-wheeled equipment that may fracture or damage the panels.
C. Provide suitable roofing system protection during installation.
D. For hot mopping asphalt or coal tar directly to gypsum roof board, follow the manufacturer's recommended system application temperature guidelines and good roofing practices.
E. Gypsum roof board must be dry prior to commencing installation of torch application:
1. Ensure product is dry. Ensure proper torching technique.
2. Limit the heat to the roof board. Maintain a majority of the torch flame directly on the roll.
3. When torching to gypsum roof boards, field priming shall not be required

3.07 CONSTRUCTION
3.08 REPAIR/RESTORATION
3.09 RE-INSTALLATION
3.10 FIELD QUALITY CONTROL
3.11 ADJUSTING
3.12 CLEANING
3.13 DEMONSTRATION
3.14 PROTECTION
A. Protect gypsum board installations from damage and deterioration until the date of Substantial Completion.

3.15 SCHEDULES

END OF SECTION

SECTION 07 54 00
THERMOPLASTIC MEMBRANE ROOFING

PART 1 GENERAL

1.01 SUMMARY
- A. Section Includes
  1. Thermoplastic Membrane Roofing Membrane
  2. Thermoplastic Membrane Roofing Fasterners
  3. Thermoplastic Membrane Roofing Plates
  4. PVC-Coated, Heat-Weldable Sheet Metal
  5. Thermolastic Membrane Roofing Membrane Accessories
- B. Products Supplied But Not Installed Under This Section
- C. Products Installed But Not Supplied Under This Section
- D. Related Sections
  1. 07 21 16 Roof Board Insulation
  2. 07 50 01 Gypsum Roof Board
  3. 07 62 00 Sheet Metal Flashing and Trim
  4. 07 72 00 Roof Accessories
- E. Allowances
- F. Unit Prices
- G. Measurement Procedures
- H. Payment Procedures
- I. Alternates

1.02 REFERENCES

1.03 DEFINITIONS

1.04 SYSTEM DESCRIPTIONS
- A. Design Requirements, Performance Requirements
  1. Roofing System shall have a Class 'A' Fire Rating.
  2. The roofing membrane shall be a polyester reinforced PVC membrane complying with ASTM D4434 as Type III.
  3. Roofing System shall have current evaluation report and shall be installed in accordance with: ICC-ES Evaluation Report ESR-1157

1.05 SUBMITTALS
- A. General
- B. Product Data
  1. Submit manufacturers' product data for each product specified.
- C. Shop Drawings
  1. Submit installation drawings indicating area of Work including typical and specific terminations and transitions of Work.
  2. Submit project specific Shop Drawings. Shop Drawings shall include:
     - a. Roof Plan
       1. Base flashings and membrane terminations.
       2. Tapered insulation, including slopes.
       3. Orientation of roof deck
       4. Orientation of roofing membrane
       5. Pattern for insulation attachment
       6. Location of expansion joints, and membrane fastening spacing.
       7. Fastening patterns for corner, perimeter, and field-of-roof locations.

b. Elevations
c. Sections
d. Transition Details
e. Attachments to other work

D. Samples
1. Submit Manufactures samples of the following:
a. Membrane
b. Fasteners/Plates
c. Membrane Flashing
2. Samples will not be returned after review and may not be incorporated into Work.

E. Quality Assurance/Control Submittals
1. Design Data, Test Reports, Certificates, Manufacturers' Instructions, Manufacturers' Field Reports, Qualification Statements
a. Design Data
b. Test Reports
1. Submit Evaluation Report applicable to roofing system specified.
c. Certificates
1. Submit manufacturer's certificate/evidence of manufacturer trained and approved installer.
d. Manufacturers' instructions
1. Submit manufacturer's installation instructions.
e. Manufacturers' Field Reports
1. Submit manufacturer's Field Reports following manufacturer's Field Inspections.

F. Closeout Submittals
1. Certificates
a. Submit manufacturer's certificates certifying the roofing system is installed properly to meet the requirements of testing reports.
2. Operation and Maintenance Data
a. Submit manufacturer's published manual of recommendations for maintenance of installed roofing system.
3. Warranty
a. Submit manufacturer's standard warranty documentation.

1.06 QUALITY ASSURANCE

A. Qualifications
1. Installer Qualifications
a. A qualified firm that is authorized by product manufacturer to install all work pertaining to product manufacturer's roof system and that is eligible to receive manufacturer's warranty.

B. Regulatory Requirements
C. Certifications
D. Field Samples
E. Mock-ups

1. Provide mockups to verify selections made under sample submittals and to demonstrate aesthetic effects and to establish quality standards for fabrication and installation.
2. Build mockup of typical roof assembly min. 10’x10’ including corner, attachments, and accessories.
3. Mockup can be part of work.

F. Pre-installation Meetings
1. Conduct conference at Project site.
2. Meeting shall include Manufacturer representative, Owner, Architect, Project Inspector, Roofing Installer, Deck Installer, and installers whose work interfaces with or affects roofing, including installers of roof accessories and roof-mounted equipment.
3. Review methods and procedures related to roofing installation, including manufacturer's most current requirements.
4. Review base flashings, special roofing details and transitions, roof drainage, roof penetrations, expansion joints, equipment curbs, and condition of other construction that affects roofing system.
5. Review temporary protection requirements for roofing system during and after installation.

1.07 DELIVERY, STORAGE, AND HANDLING

A. Packing, Shipping, Handling, and Unloading
1. Handle and store roofing materials and equipment in a manner to avoid permanent deflection of deck.
2. Comply with most current product data sheet requirements when handling, storing, protecting, or installing roofing materials. Including but not limited to avoiding physical damage, deterioration by sunlight, excessive moisture, or other potentially damaging conditions.

B. Acceptance at Site
1. Deliver roofing materials to project site in original containers with seals unbroken and labeled with product manufacturer's name or product brand name.

C. Storage and Protection
1. Store liquid materials in their original undamaged containers in a clean, dry, protected location; away from direct sunlight; within the temperature range noted on the product data sheet.

D. Waste Management and Disposal
1. In accordance with local regulations and laws.

1.08 PROJECT CONDITIONS

A. Project Environmental Requirements
1. Weather Limitations:
a. Proceed with installation only when existing and forecasted weather conditions permit the roofing system to be installed according to the manufacturer’s most current requirements and warranty requirements.
2. Material Compatibility:
a. Roofing materials shall be compatible with one another and adjacent materials under conditions of service and application required and confirmed by the roofing manufacturer.

B. Existing Conditions

1.09 SEQUENCING
1.10 SCHEDULING
1.11 WARRANTY
A. Manufacturer's System Warranty: 20 Years

1.12 SYSTEM STARTUP
1.13 OWNER'S INSTRUCTIONS
1.14 COMMISSIONING
1.15 MAINTENANCE

PART 2 PRODUCTS

2.01 MANUFACTURERS
A. Sika Sarnafil, Inc. 100 Dan Road, Canton, MA 02021 or equal.

2.02 EXISTING PRODUCTS
2.03 MATERIALS
A. Membrane
1. (SIKA) Sarnafil S 327 60
a. Min. Thickness (mil): 60
b. Felt Backing: Yes
c. Face Color: As selected by Architect; from the following color options: White, Tan, Reflective Gray, Patina Green, Copper Brown, Evergreen, Lead Gray
B. Mechanical Fasteners - Screws
1. (SIKA) Sarnafastener #15 XP
a. Shank Diameter: 0.21-inch
b. Thread Diameter: 0.26-inch
c. Length: 1-1/4" min, 20" max.
2. (SIKA) Sikaplan #14
a. Shank Diameter: 0.190-inch
b. Thread Diameter: 0.245-inch
c. Length: As required
C. Mechanical Fasteners – Plates and Discs
1. (SIKA) Sarnadisc XPN
a. Size: 1-1/2-inch x 3-3/4-inch
b. Gauge: 18
c. Material: AZ 55 Galvalume-Coated steel sheet metal plate
2. (SIKA) Sikaplan Disc
a. Size: 3-inch diameter
b. Gauge: 26
c. Material: AZ 55 Galvalume-Coated steel sheet metal plate
D. Barrier Board
1. See Section 07 50 01 Gypsum Roof Board
E. PVC-Coated, Heat-Weldable Sheet Metal
1. All sheet metal shall be cut and brake formed to profiles as indicated on drawings.
2. Gauge: 24 ASTM A-653
3. Coating: G90 galvanized sheet metal with 20 mil PVC membrane
4. Size: 4-feet x 8-feet sheets.

5. Face Color: As selected by Architect; from the following color options: White, Tan, Reflective Gray, Patina Green, Copper Brown, Evergreen, Lead Gray

F. Membrane Accessories
1. Provide all manufacturer recommended membrane accessires including: Circles, Inside Corners, Outside Corners, Splts, tapes, adhesives, etc. for a complete assembly.
2. Walkway Protection
1. (SIKA) Sarnatred-V
2. Width: 39-inches
3. Length: provide 50-feet per buidling.
4. Location: Provde continuous pathway from roof access hatch to each piece of mechanical equipment. Provide layout for Architect's review and approval prior to installation.

2.04 MANUFACTURED UNITS
2.05 EQUIPMENT
2.06 COMPONENTS
2.07 ACCESSORIES
2.08 MIXES
2.09 FABRICATION
2.10 FINISHES
2.11 SOURCE QUALITY CONTROL

PART 3 EXECUTION

3.01 INSTALLERS
A. Installer must be trained and approved by the roofing manufacturer. Evidence of this approval must be submitted to Architect for review and approval prior to commencement of installation.

3.02 EXAMINATION
A. Site Verification of Conditions
1. The roofing substrate must be smooth, dry, clean and free of sharp projections, loose fasteners, protrusions, depressions or contaminants that might interfere with the attachment of the membrane.
2. Any surface defects must be corrected prior to the membraneinstallation.
3. Proceeding with Work specified in this Section shall be interpreted to mean that all conditions were determined to be acceptable to the Contractor prior to start of installation.

3.03 PREPARATION
A. Protection
1. All materials must be protected against contact with incompatible materials.
B. Surface Preparation

3.04 ERECTION
3.05 INSTALLATION

A. Installation must comply with ICC ES ESR-1157 report, the manufacturer's published instructons.
B. The manufacturer's published instructions must be available at the jobsite at all times during installation.

3.06 APPLICATION
3.07 CONSTRUCTION
3.08 REPAIR/RESTORATION
3.09 RE-INSTALLATION
3.10 FIELD QUALITY CONTROL
A. Site Tests, Inspection
B. Manufacturers' Field Services
1. Manufacturer shall provide field instruciton and inspection services at regular installation intervals. At a minimum, prior to installation, during installation, and after installation of membrane.
2. Manufacturer shall submit written field reports from each visit to Architect for review and file.

3.11 ADJUSTING
3.12 CLEANING
3.13 DEMONSTRATION
3.14 PROTECTION
3.15 SCHEDULES

END OF SECTION

SECTION 07 62 00
SHEET METAL FLASHING AND TRIM

PART 1 GENERAL

1.01 SUMMARY
- A. Section Includes
  1. Custom fabricated sheet metal flashing and trim.
- B. Products Supplied But Not Installed Under This Section
- C. Products Installed But Not Supplied Under This Section
- D. Related Sections
  1. 07 92 00 Joint Sealants
  2. 09 91 13 Exterior Painting
- E. Allowances
- F. Unit Prices
- G. Measurement Procedures
- H. Payment Procedures
- I. Alternates

1.02 REFERENCES
- A. Sheet Metal and Air Conditioning Contractor's National Association (SMACNA), Architectural Sheet Metal Manual, latest edition.
- B. ASTM A792-86 Specification for Steel Sheet, Aluminum-Zinc Alloy-Coated by the Hot-Dip Process.
- C. ASTM B209-86 Specification for Aluminum and Aluminum-Alloy Sheet and Plate.
- D. ASTM A446-83 Specification for Steel Sheet Zinc-coated (galvanized) by the Hot-Dip process, structural (physical) quality.
- E. American Iron and Steel Institute (AISI) 1986 Specification for the Design of Cold-Formed Steel Structural Members.
- F. AAMA 2605-13 Voluntary Specification, Performance Requirements and Test Procedures for Superior Performing Organic Coatings on Aluminum Extrusions and Panels.
- G. AAMA 621-02 Voluntary Specifications for High Performance Organic Coatings on Coil Coated Architectural Hot Dipped Galvanized (HDG) and Zinc-Aluminum Coated Steel Substrates.

1.03 DEFINITIONS

1.04 SYSTEM DESCRIPTIONS
- A. Design Requirements, Performance Requirements
  1. All sheet metal work shall conform to the SMACNA Architectural Sheet Metal Manual, latest edition standards for fabrication and installation.
  2. Furnish and install custom fabricated sheet metal where shown on drawings, as specified herein, and as needed for a complete and proper installation. Including by not limited to:
     - a. Clips, cleats, anchors, and fasteners
     - b. Sheet metal flashings and other sheet metal drainage systems related to the roof.
     - c. Sheet metal flashings and other sheet metal drainage systems related to openings.
     - d. Fascia panels, ridge and valley trim, and edge trim.

1.05 SUBMITTALS

A. General Requirements: Reference section 01 33 00 Submittal Procedures

B. Product Data

1. Submit technical product data to demonstrate compliance with the specific requirements.

C. Shop Drawings

1. Submit shop drawing that include:
   a. All elevation, plan view, with keyed reference to all terminations points.
   b. Show details of all terminating points and assemblies.
   c. Show locations of fixed points.
   d. All eave, ridge, valley, rake, cricket, and counter flashings.
   e. Interfaces of flashing and trim with roofing material and adjoining materials.
   f. Description of installation procedures.
   g. Fastener, clip, and attachment layout, with load carrying capacity to meet specified material and how fastener will hold into substrate.

D. Samples

1. Submit six (6) samples minimum 12-inch square of all sheet metal materials used.
2. Submit samples of appropriate shape and dimension to show type of solder or welding, fastening and finishing.

E. Quality Assurance/Control Submittals

F. Closeout Submittals

1.06 QUALITY ASSURANCE

A. Qualifications

1. Use adequate numbers of skilled workpeople who are thoroughly trained and experienced in the necessary crafts and who are completely familiar with the specified requirements and the methods needed for proper performance of the work of this section.
2. The fabrication and installation company must have at least five years' experience in similar construction.
3. Contractor shall be capable of fabrication and installation with own forces and have a shop facility capable of custom fabrication of metal trim, rake and eaves, built-in gutters, ridges, and other required flashings to configurations as shown on the drawings.

B. Regulatory Requirements

C. Certifications

D. Field Samples

1. Where indicated on drawings, fabricator shall provide field samples to demonstrate design intent.

E. Mock-ups

1. Where indicated on drawings, fabricator shall provide mock-ups to demonstrate design intent.

F. Pre-installation Meetings

1.07 DELIVERY, STORAGE, AND HANDLING

A. Packing, Shipping, Handling, and Unloading

1. All fabricated materials must be adequately packaged for handling to the project site. Packaging should be minimum necessary to provide the fabricated materials to the project site free of dents,

buckles, scratches, or other imperfections imparted to the materials by shipping.

2. If hoisting is required, materials shall be adequately packaged to enable hoisting without damage to the materials.

B. Acceptance at Site

C. Storage and Protection

1. Materials shall be correctly marked and packaged for easy access.
2. Materials stored at the project site must be elevated and sloped for moisture to drain from the surfaces.
3. Package materials must be of a type that will not stain or adhere to the metal surfaces when wet or exposed to sunlight for the length of the expected storage.
4. The materials stored on site must be vented to allow condensation to escape from the materials.
5. Store materials in a manner to avoid damages such as buckling, abrasion, warping or water setting on the materials.
6. Aluminum, copper, and copper alloys shall be stored in a clean dry location away from curing concrete and uncured masonry. Cover in a waterproof material and vent to prevent condensation.
7. Protective films should be used whenever possible to reduce the occurrence of damage to the panel surface during fabrication and handling. Protective films must be removed after installation of the material on a daily basis to prevent adherence to metal surface.

D. Waste Management and Disposal

1.08 PROJECT CONDITIONS
1.09 SEQUENCING
1.10 SCHEDULING
1.11 WARRANTY

A. For two years to the date of substantial completion of the work of this section the sheet metal contractor shall warrant the work is not defective in workmanship or materials and conforms to the final approved shop drawings except for reasonable variances not impairing the performance or the roof system. This warranty applies to both patent and latent defects but does not cover ordinary wear and tear or unusual abuse, or neglect or the acts and omissions of parties other than the sheet metal roofing manufacturer and installer.

1.12 SYSTEM STARTUP
1.13 OWNER'S INSTRUCTIONS
1.14 COMMISSIONING
1.15 MAINTENANCE

PART 2 PRODUCTS

2.01 MANUFACTURERS
2.02 EXISTING PRODUCTS
2.03 MATERIALS

A. Aluminum Sheet

1. Minimum 0.040 inch sheet thickness unless noted otherwise on drawings.

2. Standard alloys shall conform to the requirements published in the Aluminum Association's Aluminum Standards and Data and to ASTM B209 Sheet and Plate.
3. For typical metal flashings use one of the following alloys:
    a. Alloy 3003-H14 Sheet and Plate meeting ASTM B209, Federal Specification QQ-A-250/2.
    b. Alloy 3004 – Sheet and Plate Meeting ASTM B209.
4. Unfinished aluminum flashing to be alclad.
5. Anodized aluminum to be appropriate alloy and temper to achieve specified color and surface finish.
6. Finishes as indicated on drawings from the following:
    a. Mill Finish
    b. Anodize Finish
        1. AAMA 611, Architectural Class I anodized to 0.0007-inch min. thickness.
        2. Color to be selected by Architect from manufacturer's full color range.
    c. PVDF Based Coating: Fluoropolymer finish containing minimum 70% polyvinylidene difluoride resins.
        1. Factory applied and shall meet the performance requirements of AAMA 621-02 or latest edition.
        2. Three coat system
        3. Custom RAL color to be selected by Architect.

B. Carbon Steel Sheet
1. Minimum 24-gauge sheet thickness unless noted otherwise on drawings.
2. Finish as indicated on drawings from the following:
    a. Galvanized Coating: G90 galvanized sheet steel with minimum 1.25 oz. per sq. ft. of zinc coating meeting ASTM A525 Sheet Steel Hot Dipped Galvanized Specification, ASTM A446 Steel Sheets of Structural Quality, coils, and cut lengths, and Federal Spec: QQ-S-775-D.
    b. Aluminum-Zinc Coating, applied by the hot-dip method meeting ASTM A792.
    c. PVDF Based Coating: Fluoropolymer finish containing minimum 70% polyvinylidene difluoride resins.
        1. Factory applied and shall meet the performance requirements of AAMA 621-02 or latest edition.
        2. Three coat system
        3. Custom RAL color to be selected by Architect.
    d. Paint Finish: See section 09 91 13 Exterior Painting

C. Fastenings
1. Nails, rivets, and other fastenings furnished in connection with galvanized sheet steel Work shall be sealed with rust resistive coating. Rivets shall be tinned. Nails and other fastenings shall be zinc-coated.

D. Soldering Flux
1. Raw muriatic acid for galvanized steel; rosin for tin, lead and tinned copper; non-corrosive soldering salts for uncoated copper and acid-type flux formulated for soldering stainless steel.

E. Solder

1. ASTM B32, Grade 5A, composed of 95-5 tin-antimony. Name of product manufacturer and grade designation shall be labeled, stamped or cast onto each coil or bar.

2.04 MANUFACTURED UNITS
2.05 EQUIPMENT
2.06 COMPONENTS
2.07 ACCESSORIES
2.08 MIXES
2.09 FABRICATION
A. Shop Assembly
1. Shop fabricate to the maximum extent possible.
2. Custom fabricate all related flashings by obtaining field dimensions for accurate fit.
3. Layout so cross seams, when required, will be made in the direction of flow with higher pans overlapping the lower pans. Keep field cutting to a minimum.
4. Eaves and transverse seams to be folded and cleated in the shop.
5. Provide staggered transverse seams.
6. Accurately form sheet metal to dimensions and shapes indicated and required. Cope finish molded and brake metal shapes with true, straight, sharp lines and angles and, where intersecting each other, to a precise fit.
7. Exposed edges of sheet metal shall have a ½ inch minimum hemmed edge.
8. Soldering of sheet steel or copper shall be performed with well-heated copper soldering iron or soldering torch, joints full flowing, neat and consistent. Fill joint completely with solder. Clean materials at joints before soldering, and tin coppers before soldering. Exposed soldering on finished surfaces shall be scraped smooth. Lock seam work shall be fabricated flat and true to line and soldered along its entire length. Acid-fluxed Work shall be neutralized after fabrication.
9. Form and install sheet metal Work to provide proper allowances for expansion and contraction, without causing undue stresses in any part of completed Work. Installation shall be water and weathertight.
10. All fabrication shall conform to the SMACNA Architectural Sheet Metal Manual, latest edition standards.

2.10 FINISHES
2.11 SOURCE QUALITY CONTROL

PART 3 EXECUTION

3.01 INSTALLERS
3.02 EXAMINATION
A. Site Verification of Conditions
1. Contractor shall examine the areas and conditions under which work of this section will be performed. Do not proceed until unsatisfactory conditions are corrected.
2. Verify that the substrates are sound, dry, smooth, clean, sloped for drainage, and completely anchored.

3.03 PREPARATION
3.04 ERECTION
3.05 INSTALLATION
- A. General
  1. Install all materials in accordance with good trade practices and in accordance with the SMACNA Architectural Sheet Metal Manual, latest edition and recommendations of the Aluminum Association, Aluminum Design Manual, latest edition.
  2. Flash around all exterior openings in the building where other waterproofing methods are insufficient.
  3. Conceal fastenings as much as possible.
  4. Do not install bent of otherwise damaged materials.
- B. Joints
  1. Provide flat locked and soldered joints where possible.
  2. Provide minimum of 1-inch laps on all soldered sheet metal work.
  3. Where concealed joints are possible, provide flat locked soldered joints with 3-inch reinforcing behind, set in full bed of solder.
  4. Do not leave any sheet metal joint unsealed.

3.06 APPLICATION
3.07 CONSTRUCTION
3.08 REPAIR/RESTORATION
3.09 RE-INSTALLATION
3.10 FIELD QUALITY CONTROL
3.11 ADJUSTING
3.12 CLEANING
- A. Remove and properly dispose of all foreign material and debris from project area.
- B. Clean and neutralize all flux materials.
- C. Clean off all excess solder and sealants.
- D. Wipe off all hand prints, smudges and other superficial stains from work.
- E. Remove and replace all dented and damaged materials.

3.13 DEMONSTRATION
3.14 PROTECTION
3.15 SCHEDULES

END OF SECTION

SECTION 07 65 10
FLUID-APPLIED FLASHING MEMBRANE

PART 1 GENERAL

1.01 SUMMARY
- A. Section Includes
  - 1. Fluid applied, one component, flashing membrane.
- B. Products Supplied But Not Installed Under This Section
- C. Products Installed But Not Supplied Under This Section
- D. Related Sections
  - 1. 07 25 00 Water-Resistive Barriers
- E. Allowances
- F. Unit Prices
- G. Measurement Procedures
- H. Payment Procedures
- I. Alternates

1.02 REFERENCES

1.03 DEFINITIONS

1.04 SYSTEM DESCRIPTIONS
- A. Design Requirements, Performance Requirements
  - 1. Fluid applied, one coat, membrane that cures to form a durable, resilient, monolithic, and fully bonded elastomeric flashing.

1.05 SUBMITTALS
- A. Product Data
  - 1. Submit each product specified
- B. Shop Drawings
- C. Samples
- D. Quality Assurance/Control Submittals
  - 1. Design Data, Test Reports, Certificates, Manufacturers' Instructions, Manufacturers' Field Reports, Qualification Statements
    - a. Submit manufacturer's details and installation procedures
    - b. Submit manufacturer's test reports indicating compliance with the performance requirements of this section.
    - c. Submit manufacturer's standard product warranty that product and accessories are free of defects at time of delivery, and are manufactured to meet manufacturer's published physical properties and material specifications.

1.06 QUALITY ASSURANCE

1.07 DELIVERY, STORAGE, AND HANDLING
- A. Packing, Shipping, Handling, and Unloading
  - 1. Comply with manufacturer's recommendations for handling of each product.
- B. Acceptance at Site
- C. Storage and Protection
  - 1. Comply with manufacturer's recommendations for storage of each product.

1.08 PROJECT CONDITIONS
1.09 SEQUENCING
1.10 SCHEDULING
1.11 WARRANTY
1.12 SYSTEM STARTUP
1.13 OWNER'S INSTRUCTIONS
1.14 COMMISSIONING
1.15 MAINTENANCE

PART 2 PRODUCTS

2.01 MANUFACTURERS
- A. GCP Applied Technologies Inc.., 62 Whittemore Avenue, Cambridge, MA 02140, or equal.

2.02 EXISTING PRODUCTS
2.03 MATERIALS
- A. (GCP) PERM-A-BARRIER Liquid Flashing

2.04 MANUFACTURED UNITS
2.05 EQUIPMENT
2.06 COMPONENTS
2.07 ACCESSORIES
2.08 MIXES
2.09 FABRICATION
2.10 FINISHES
2.11 SOURCE QUALITY CONTROL

PART 3 EXECUTION

3.01 INSTALLERS
3.02 EXAMINATION
- A. Site Verification of Conditions
  1. Examine conditions for compliance with manufacturer's requirements for installation, tolerances and other specific conditions affecting performance of flashing.

3.03 PREPARATION
- A. Protection
- B. Surface Preparation
  1. Remove all deleterious materials from surfaces to be flashed.

3.04 ERECTION
3.05 INSTALLATION
- A. Install in accordance with manufacturers published guidelines.

3.06 APPLICATION
3.07 CONSTRUCTION
3.08 REPAIR/RESTORATION
3.09 RE-INSTALLATION
3.10 FIELD QUALITY CONTROL
3.11 ADJUSTING
3.12 CLEANING

3.13 DEMONSTRATION
3.14 PROTECTION
3.15 SCHEDULES

END OF SECTION

SECTION 07 65 26
SELF-ADHERING SHEET FLASHING

PART 1 GENERAL

1.01 SUMMARY
- A. Section Includes
  1. Flexible rubberized asphalt adhesive based self-sealing flashing
- B. Products Supplied But Not Installed Under This Section
- C. Products Installed But Not Supplied Under This Section
- D. Related Sections
  1. 06 10 00 Rough Carpentry
  2. 07 25 00 Water-Resistive Barriers
- E. Allowances
- F. Unit Prices
- G. Measurement Procedures
- H. Payment Procedures
- I. Alternates

1.02 REFERENCES
- A. ASTM E96 – Test Methods for Water Vapor Transmission of Materials
- B. ASTM D570 – Test Method for Water Absorption of Plastics
- C. ASTM E2112 – Standard Practice for Installation of Exterior Windows, Doors, and Skylights
- D. ASTM D1970 – Standard Specifications for Self-Adhering Polymer Modified Bituminous Sheet Materials Used as Steep Roofing Underlayment for Ice Dam Protection
- E. ASTM D412 – Test Methods for Vulcanized Rubber & Thermoplastic Rubbers and Thermoplastic Elastomers – Tension
- F. ASTM D3652 – Standard Test Method for Thickness of Pressure Sensitive Tapes

1.03 DEFINITIONS

1.04 SYSTEM DESCRIPTIONS
- A. Design Requirements, Performance Requirements
  1. Meets or exceeds the requirements set forth in AAMA 711-13 voluntary specification for self-adhered flashing Level 3 requirement for elevated temperature exposure.
  2. Meets or exceeds the requirements set forth in ASTM E2112 for Flashing Exterior Windows and Doors
  3. Water Penetration around Nails: ASTM D1970 Section 7.9, modified per section 5.2.1 of AAMA 711 voluntary specification – Pass 1.2 in head of water
  4. Tensile Strength: ASTM D412, Die C Modified – Min. 985 kPa (143 psi)
  5. Thickness: ASTM 3652 – Min 40 mils

1.05 SUBMITTALS
- A. Product Data
  1. Submit each product specified
- B. Shop Drawings
- C. Samples
  1. Submit min 6-inch x 6-inch sample of products specified
- D. Quality Assurance/Control Submittals

1. Design Data, Test Reports, Certificates, Manufacturers' Instructions, Manufacturers' Field Reports, Qualification Statements
    a. Submit manufacturer's details and installation procedures
    b. Submit manufacturer's test reports indicating compliance with the performance requirements of this section.
    c. Submit manufacturer's standard product warranty that flashing and accessories are free of defects at time of delivery, and are manufactured to meet manufacturer's published physical properties and material specifications.

1.06 QUALITY ASSURANCE
- A. Qualifications
- B. Regulatory Requirements
- C. Certifications
- D. Field Samples
- E. Mock-ups
- F. Pre-installation Meetings

1.07 DELIVERY, STORAGE, AND HANDLING
- A. Packing, Shipping, Handling, and Unloading
    1. Comply with manufacturer's recommendations for handling of each product.
- B. Acceptance at Site
- C. Storage and Protection
    1. Comply with manufacturer's recommendations for storage of each product.

1.08 PROJECT CONDITIONS
1.09 SEQUENCING
1.10 SCHEDULING
1.11 WARRANTY
1.12 SYSTEM STARTUP
1.13 OWNER'S INSTRUCTIONS
1.14 COMMISSIONING
1.15 MAINTENANCE

PART 2 PRODUCTS

2.01 MANUFACTURERS
- A. W.R. Grace & Co., 62 Whittemore Avenue, Cambridge, MA 02140, or equal.

2.02 EXISTING PRODUCTS
2.03 MATERIALS
- A. Vertical Surfaces:
    1. (Grace) Vycor Pro Flashingp
- B. Horizontal Surfaces (Parapets, Caps, etc.)
    2. (Grace) Grace Ultra Roofing Underlayment

2.04 MANUFACTURED UNITS
2.05 EQUIPMENT
2.06 COMPONENTS
2.07 ACCESSORIES

A. Primer
1. (Grace) Perm-A-Barrier WB Primer

2.08 MIXES
2.09 FABRICATION
2.10 FINISHES
2.11 SOURCE QUALITY CONTROL

PART 3 EXECUTION

3.01 INSTALLERS
3.02 EXAMINATION
A. Site Verification of Conditions
1. Examine conditions for compliance with manufacturer's requirements for installation, tolerances and other specific conditions affecting performance of flashing.

3.03 PREPARATION
A. Protection
B. Surface Preparation
1. Remove all deleterious materials from surfaces to be flashed.

3.04 ERECTION
3.05 INSTALLATION
A. Install flashing to dry clean surfaces at air and surface temperatures of 25°F and above in accordance with manufacturer's recommendations at locations indicated on Construction Documents.
B. Primer
1. When required by dirty or dusty site conditions or by surfaces having irregular or rough texture, apply primer by air spray, brush or roller or apply primer by brush or roller at the rate recommended by manufacturer, prior to flashing installation. Allow the primer to dry completely before flashing application.
a. Not required for most wood substrates including plywood and OSB provided if they are clean and dry.
b. Required for concrete, masonry, and gypsum sheathing prior to flashing.
C. Self-Adhering Sheet Flashing
1. Precut pieces of flashing to easily handled lengths for each location.
2. Remove silicone-coated release paper and position flashing carefully before placing it against the surface.
3. When properly positioned, place against surface by pressing firmly into place by hand roller. Fully adhere flashing to substrate to prevent water from migrating under flashing.
4. Overlap adjacent pieces 2 in. and roll all seams with a steel hand roller.
5. Trim bottom edge 1/2 in. back from exposed face of the wall. Flashing shall not be permanently exposed to sunlight.
6. At heads, sills and all flashing terminations turn up ends a minimum of 2 in. and make careful folds to form an end dam, with the seams sealed.
7. Do not expose flashing membrane to sunlight for more than one hundred and twenty (120) days prior to enclosure.

3.06 APPLICATION
3.07 CONSTRUCTION
3.08 REPAIR/RESTORATION
3.09 RE-INSTALLATION
3.10 FIELD QUALITY CONTROL
3.11 ADJUSTING
3.12 CLEANING
3.13 DEMONSTRATION
3.14 PROTECTION
3.15 SCHEDULES

END OF SECTION

SECTION 07 72 00
ROOF ACCESSORIES

PART 1 GENERAL

1.01 SUMMARY
- A. Section Includes
  1. Roof Access Hatch
  2. Roof Hatch Safety Railing System
  3. Roof Hatch Access Ladder
  4. Ladder Safety Post
- B. Products Supplied But Not Installed Under This Section
- C. Products Installed But Not Supplied Under This Section
- D. Related Sections
- E. Allowances
- F. Unit Prices
- G. Measurement Procedures
- H. Payment Procedures
- I. Alternates

1.02 REFERENCES

1.03 DEFINITIONS

1.04 SYSTEM DESCRIPTIONS

1.05 SUBMITTALS
- A. Product Data
  1. Submit manufacture's product data for each product specified.
- B. Shop Drawings
  1. Submit scaled drawings including profiles, accessories, locations, adjacent construction interface, dimensions, and anchorage details.
- C. Samples
  1. Submit manufacture's finish samples for products specified.
- D. Quality Assurance/Control Submittals
  1. Design Data, Test Reports, Certificates, Manufacturers' Instructions, Manufacturers' Field Reports, Qualification Statements
     a. Submit manufacturer's standard warranty
     b. Submit manufacturer's installation instructions
- E. Closeout Submittals

1.06 QUALITY ASSURANCE
- A. Qualifications
  1. Manufacturer shall have a minimum of 5 years' experience manufacturing similar products.
  2. Installer shall have a minimum of 2 years' experience installing similar products.
- B. Regulatory Requirements
- C. Certifications
- D. Field Samples
- E. Mock-ups
- F. Pre-installation Meetings

1.07 DELIVERY, STORAGE, AND HANDLING
- A. Packing, Shipping, Handling, and Unloading
  - 1. Deliver products in manufacturer's original packaging.
- B. Acceptance at Site
  - 1. Inspect product upon receipt and report damaged material immediately to delivering carrier and note such damage on the carrier's freight bill of lading.
- C. Storage and Protection
  - 1. Store materials in a dry, protected, well-vented area.
- D. Waste Management and Disposal

1.08 PROJECT CONDITIONS
1.09 SEQUENCING
1.10 SCHEDULING
1.11 WARRANTY
1.12 SYSTEM STARTUP
1.13 OWNER'S INSTRUCTIONS
1.14 COMMISSIONING
1.15 MAINTENANCE

PART 2 PRODUCTS

2.01 MANUFACTURERS
- A. Roof Access Hatch, Roof Hatch Safety Railing System
  - 1. The Bilco Company, P.O. Box 1203, New Haven, CT 06505, or equal.
  - 2. Babcock-Davis, 9300 73rd Avenue North, Brooklyn Park, MN 55428
- B. Roof Hatch Access Ladders
  - 1. Alaco Ladder Company, 5167 G Street, Chino, CA 91710, or equal.
- C. Ladder Safety Post
  - 1. The Bilco Company, P.O. Box 1203, New Haven, CT 06505, or equal.
  - 2. Babcock-Davis, 9300 73rd Avenue North, Brooklyn Park, MN 55428

2.02 EXISTING PRODUCTS
2.03 MATERIALS
2.04 MANUFACTURED UNITS
- A. Roof Access Hatch
  - 1. (Bilco) Type F-50TB – Thermally Broken Roof Hatch
    - a. Size: Width 48-inches, Length (Hinge side) 48-inches
    - b. Finish: Factory Powder Coat, Standard Colors
  - 2. (Babcock-Davis) Equivalent Product
- B. Roof Hatch Safety Railing System
  - 1. (Bilco) Bil-Guard 2.0 Roof Hatch Safety Railing System
    - a. Size: RL2-F
    - b. Finish: Factory Powder Coat, Standard Colors
  - 2. (Babcock-Davis) Equivalent Product
- C. Roof Hatch Access Ladder
  - 1. (Alaco) Model 560
    - a. Base: Wall mount option
    - b. Finish: Powder Coat, Custom RAL Colorp
- D. Ladder Safety Post
  - 1. (Bilco) Model LU-1
  - 2. (Babcock-Davis) Equivalent Product

2.05 EQUIPMENT
2.06 COMPONENTS
2.07 ACCESSORIES
2.08 MIXES
2.09 FABRICATION
2.10 FINISHES
2.11 SOURCE QUALITY CONTROL

PART 3 EXECUTION

3.01 INSTALLERS
3.02 EXAMINATION
- A. Site Verification of Conditions
  1. Examine substrates and openings for compliance with requirements for installation tolerances and other conditions affecting performance.
  2. Proceed with installation only after unsatisfactory conditions have been corrected.

3.03 PREPARATION
3.04 ERECTION
3.05 INSTALLATION
- A. Install products in strict accordance with manufacturer's instructions and approved submittals.
- B. Locate units level, plumb, and in proper alignment with adjacent work.
- C. Test units for proper function and adjust until proper operation is achieved.
- D. Repair finishes damaged during installation.
- E. Restore finishes so no evidence remains of corrective work.

3.06 APPLICATION
3.07 CONSTRUCTION
3.08 REPAIR/RESTORATION
3.09 RE-INSTALLATION
3.10 FIELD QUALITY CONTROL
3.11 ADJUSTING
3.12 CLEANING
- A. Clean exposed surfaces using methods acceptable to the manufacturer which will not damage finish

3.13 DEMONSTRATION
3.14 PROTECTION
3.15 SCHEDULES

END OF SECTION

SECTION 07 84 43
JOINT FIRESTOPPING

PART 1 GENERAL

1.01 SUMMARY
- A. Section Includes
  - 1. Through Penetration Firestopping
  - 2. Fire Resistive Joint Systems
- B. Products Supplied But Not Installed Under This Section
- C. Products Installed But Not Supplied Under This Section
- D. Related Sections
  - 1. 07 92 00 Joint Sealants
- E. Allowances
- F. Unit Prices
- G. Measurement Procedures
- H. Payment Procedures
- I. Alternates

1.02 REFERENCES
- A. American National Standards Institute (ANSI):
  - 1. ANSI/UL 263 - Fire Tests of Building Construction and Materials.
  - 2. ANSI/UL 723 - Surface Burning Characteristics of Building Materials.
  - 3. ANSI/UL 1479 - Standard for Fire Tests of Through-Penetration Firestops.
  - 4. ANSI/UL 2079 - Tests for Fire Resistance of Building Joint Systems.
- B. American Society for Testing and Materials(ASTM):
  - 1. ASTM E 84 - Standard Test Method for Surface Burning Characteristics of Building Materials.
  - 2. ASTM E 119 - Standard Test Methods for Fire Tests of Building Construction and Materials.
  - 3. ASTM E 814 - Standard Test Method for Fire Tests of Through-Penetration Firestops.
  - 4. ASTM E 1966 - Standard Test Method for Fire Resistive Joint Systems.
- C. National Fire Protection Association (NFPA):
  - 1. NFPA 80 - Standard for Fire Doors and Other Opening Protectives.
- D. Underwriters Laboratories (UL) - UL Building Materials Directory:
  - 1. Through-Penetration Firestops Systems (XHEZ).
  - 2. Joint Systems (XHBN).
  - 3. Firestop Devices (XHJI).
  - 4. Forming Materials (XHKU).
  - 5. Wall Opening Protective Materials (CLIV).
  - 6. Fill, Void or Cavity Materials (XHHW).
- E. SCAQMD Rule 1168 VOC Limits
- F. C.C.R., Title 24, Part 11, Table 5.504.4.1- Adhesive VOC Limit and Table 5.504.4.2 – Sealant VOC Limit

1.03 DEFINITIONS
- A. SCAQMD: South Coast Air Quality Management District
- B. VOC: Volatile Organic Compound

1.04 SYSTEM DESCRIPTIONS

A. Design Requirements, Performance Requirements

1. Provide systems that are listed by at least one the following:

a. Underwriters Laboratories Inc. (UL), Fire Resistance Directory

b. Gypsum Association (GA), Fire Resistance Design Manual

1.05 SUBMITTALS

A. Product Data

1. Furnish manufacturer's product data sheets on each material to be used in firestop systems. Information on manufacturer's product data sheet should include:

a. Product characteristics including compliance with appropriate ASTM/UL/ANSI test standards.

b. Storage and handling requirements and recommendations.

B. Shop Drawings

C. Samples

D. Quality Assurance/Control Submittals

1. Design Data, Test Reports, Certificates, Manufactures' Instructions, Manufacturers' Field Reports, Qualification Statements

a. Submit certificates of conformance signed by firestop system manufacturer certifying that materials furnished comply with requirements.

b. Furnish manufacturer's installation instructions.

E. Closeout Submittals

1.06 QUALITY ASSURANCE

A. Qualifications

1. All through-penetration firestop systems and construction gap fire resistive systems shall be installed with approved methods using materials that have been tested and classified to produce an approved assembly.

2. All primary products specified in this section will be supplied by a single manufacturer with a minimum of twenty-five (25) years' experience.

3. Firm must be qualified by having experience, staff, and be properly trained to install the specified products, and meets the following criteria:

a. Contractor must provide a list of completed projects as evidence of experience; include project name and address, owner's name and address, and architect's name and phone number.

B. Regulatory Requirements

1. Adhesives, adhesive bonding primers, adhesive primers, sealants, sealant primers, and caulks shall comply with local or regional air pollution control or air quality management district rules where applicable, or SCAQMD Rule 1168 VOC limits, as shown in C.C.R., Title 24, Part 11, Tables 5.504.4.1 and 5.504.4.2. Such products also shall comply with Rule 1168 prohibition on the use of certain toxic compounds (Chloroform, ethylene dichloride, methylene chloride, perchloroethylene, and trichloroethylene), except for aerosol products as specified in Subsection 2, below.

2. Aerosol adhesives, and smaller unit sizes of adhesives, and sealant or caulking compounds (in units of product, less packaging, which do not weigh more than one pound and do not consist of more than 16 fluid ounces) shall comply with statewide VOC standards and other requirements, including prohibitions on use of certain toxic compounds, of California Code of Regulations, Title 17, commencing with Section 94507.

1.07 DELIVERY, STORAGE, AND HANDLING

A. Packing, Shipping, Handling, and Unloading

1. Deliver products ready for installation in manufacturer's original unopened packaging, legibly marked with manufacturer's name and product identification, date of manufacture, lot number, listing agency's classification marking, curing/dry time, mixing instructions (if applicable) and MSDS reference number.

B. Storage and Protection

1. Store products until ready for installation in manufacturer's original unopened packaging, legibly marked with manufacturer's name and product identification, date of manufacture, lot number, listing agency's classification marking, curing/dry time, mixing instructions (if applicable) and MSDS reference number.
2. Store and handle in such a manner as to prevent deterioration or damage due to moisture, temperature changes, contaminants, and other causes; follow manufacturer's instructions.

C. Waste Management and Disposal

1. Store and dispose of hazardous materials, and materials contaminated by hazardous materials, in accordance with requirements of local Authority Having Jurisdiction.

1.08 PROJECT CONDITIONS

A. Project Environmental Requirements

1. Maintain environmental conditions (temperature, humidity, and ventilation) within limits recommended by manufacturer for optimum results. Do not install firestopping under environmental conditions outside manufacturer's absolute limits.
2. Provide ventilation as required by firestopping manufacturer, including mechanical ventilation if required.

B. Existing Conditions

1. Coordinate construction and cutting of openings so that each particular firestop system may be installed in accordance with its listing, including assembly rating, L rating, sizing, sleeves, manufacturer’s published S.T.C. rating and penetrating items.

1.09 SEQUENCING

A. Coordinate firestopping of dynamic and static construction joints (top-of-wall, bottom-of-wall, floor-to-floor, floor-to-wall), wall-to-wall, perimeter so that each particular system may be installed in accordance with its listing, including assembly rating, sizing, movement capabilities and manufacturer’s published S.T.C. rating.

1.10 SCHEDULING

1.11 WARRANTY

A. At project closeout, provide to Owner or Owners Representative an executed copy of the manufacturer's standard limited warranty against manufacturing defect, outlining its terms, conditions, and exclusions from coverage.

1.12 SYSTEM STARTUP
1.13 OWNER'S INSTRUCTIONS
1.14 COMMISSIONING
1.15 MAINTENANCE

PART 2 PRODUCTS

2.01 MANUFACTURERS

A. 3M Fire Protection Products: 3M Center Bldg. 223-2N-21, St. Paul, MN 55144, or equal.
B. Hilti, Inc., 7250 Dalla Pkwy, #100, Plano, TX 75024
C. Pecora Corporation, 165 Wambold Road, Harleysville, PA 19438

2.02 EXISTING PRODUCTS
2.03 MATERIALS

A. Through Penetration Firestop Products
   1. (3M) Fire Barrier Sealant FD 150+
      a. Fire Resistance: 1, 2 or 3 hour
   2. (Hilti) FS-One Intumescent Fire Stop Sealant
   3. (Pecora) AC-20 FTR
      a. Fire resistance: 1, or 2 hour

B Fire Resistive Joint Products
   1. (3M) Fire Barrier Sealant FD 150+
      a. Fire Resistance: 1, 2, 3 or 4 hour
   2. (Hilti) FS-One Intumescent Fire Stop Sealant
   3. (Pecora) AC-20 FTR
      a. Fire resistance: 1, or 2 hour

2.04 MANUFACTURED UNITS
2.05 EQUIPMENT
2.06 COMPONENTS
2.07 ACCESSORIES
2.08 MIXES
2.09 FABRICATION
2.10 FINISHES
2.11 SOURCE QUALITY CONTROL

PART 3 EXECUTION

3.01 INSTALLERS
3.02 EXAMINATION

A. Site Verification of Conditions
   1. Do not begin installation until substrates have been properly prepared.
   2. Conduct tests according to manufacturer's written recommendations to verify that substrates are free of oil, grease, rolling compounds, incompatible primers, loose mill scale, dirt and other foreign substances capable of impairing bond of firestopping.

3. Verify that items penetrating fire rated assemblies are securely attached, including sleeves, supports, hangers, and clips.
4. Verify that openings and adjacent areas are not obstructed by construction that would interfere with installation of firestopping, including ducts, piping, equipment, and other suspended construction.
5. Verify that environmental conditions are safe and suitable for installation of firestopping.
6. If substrate preparation is the responsibility of another installer, notify Architect of Record of unsatisfactory preparation before proceeding.

3.03 PREPARATION

A. Protection
   1. Install masking and temporary coverings as required to prevent contamination or defacement of adjacent surfaces due to firestopping installation.

B. Surface Preparation
   1. Prepare substrates in accordance with manufacturer's instructions and recommendations.

3.04 ERECTION

3.05 INSTALLATION

3.06 APPLICATION

A. Install in strict accordance with manufacturer's detailed installation instructions and procedures.

B. Install so that openings are completely filled, and material is securely adhered.

C. Where firestopping surface will be exposed to view, finish to a smooth, uniform surface flush with adjacent surfaces.

D. After installation is complete, remove combustible forming materials and accessories that are not part of the listed system.

E. Repair or replace defective installations in accordance with manufacturer’s recommendations, listed systems details and applicable code requirements.

F. At each through penetration or fire-resistive joint system, attach identification labels on both sides in location where label will be visible to anyone seeking to remove penetrating items or firestopping.

G. Clean firestop materials off surfaces adjacent to openings as work progresses, using methods and cleaning materials approved in writing by firestop system manufacturer and which will not damage the surfaces being cleaned.

H. Notify Authority Having Jurisdiction when firestopping installation is ready for inspection; obtain advance approval of anticipated inspection dates and phasing, if any, required to allow subsequent construction to proceed.

I. Do not cover firestopping with other construction until approval of authority having jurisdiction has been received.

3.07 CONSTRUCTION

3.08 REPAIR/RESTORATION

A. Touch-up, repair or replace damaged products before Substantial Completion.

3.09 RE-INSTALLATION

3.10 FIELD QUALITY CONTROL

A. Site Tests, Inspections, Manufacturers' Field Services

1. Install identification Labels for Through Penetration and Construction Joint Systems: Pressure sensitive self-adhesive vinyl labels, preprinted with the following information:

a. The applicable words "Warning - Through Penetration Firestop System - Do not Disturb. Notify Building Management of Any Damage." or "Warning – Construction Gap Fire Resistive System - Do not Disturb. Notify Building Management of Any Damage."

b. Listing agency's system number or designation.

c. Date of installation.

3.11 ADJUSTING

3.12 CLEANING

A. Remove left over material and debris from Work area.

3.13 DEMONSTRATION

3.14 PROTECTION

A. Use necessary means to protect fire protection product(s) before, during, and after installation.

3.15 SCHEDULES

END OF SECTION

SECTION 07 92 00
JOINT SEALANTS

PART 1 GENERAL

1.01 SUMMARY
- A. Section Includes
  1. Joint sealants
  2. Preparation for application of sealants
  3. Back-up material
- B. Products Supplied But Not Installed Under This Section
- C. Products Installed But Not Supplied Under This Section
  1. Field-Molded Concrete Paving Joint Sealant; See 32 13 13 Concrete Paving
  2. Filed-Molded Concrete Unit Masonry Joint Sealant; See 04 22 00 Concrete Unit Masonry
- D. Related Sections
  1. 04 22 00 Concrete Unit Masonry
  2. 32 13 13 Concrete Paving

1.02 REFERENCES
- A. SCAQMD Rule 1168 VOC Limits
- B. C.C.R., Title 24, Part 11, Table 5.504.4.1- Adhesive VOC Limit and Table 5.504.4.2 – Sealant VOC Limit

1.03 DEFINITIONS
- A. SCAQMD: South Coast Air Quality Management District
- B. VOC: Volatile Organic Compound

1.04 SYSTEM DESCRIPTIONS

1.05 SUBMITTALS
- A. Product Data
  1. Submit manufacturer's literature for each sealant material.
- B. Shop Drawings
  1. Submit Shop Drawings indicating sealant joint locations, with full-size sealant joint details.
- C. Samples
  1. Submit Samples indicating color range available for each sealant material intended for installation in exposed locations.
- D. Quality Assurance/Control Submittals
  1. Submit manufacturer’s certification materials comply with requirements specified.
  2. Submit manufacturer's adhesion compatibility test reports according to ASTM C794 for each substrate.
- E. Closeout Submittals

1.06 QUALITY ASSURANCE
- A. Qualifications
  1. The Work of this section shall be installed by a firm which has been in the business of installing similar materials for at least five consecutive years; and can show evidence of satisfactory completion of five projects of similar size and scope.

2. Installer shall have applicators trained and approved by manufacturer for performing this Work.

B. Regulatory Requirements

1. Adhesives, adhesive bonding primers, adhesive primers, sealants, sealant primers, and caulks shall comply with local or regional air pollution control or air quality management district rules where applicable, or SCAQMD Rule 1168 VOC limits, as shown in C.C.R., Title 24, Part 11, Tables 5.504.4.1 and 5.504.4.2. Such products also shall comply with Rule 1168 prohibition on the use of certain toxic compounds (Chloroform, ethylene dichloride, methylene chloride, perchloroethylene, and trichloroethylene), except for aerosol products as specified in Subsection 2, below.
2. Aerosol adhesives, and smaller unit sizes of adhesives, and sealant or caulking compounds (in units of product, less packaging, which do not weigh more than one pound and do not consist of more than 16 fluid ounces) shall comply with statewide VOC standards and other requirements, including prohibitions on use of certain toxic compounds, of California Code of Regulations, Title 17, commencing with Section 94507.

C. Certifications

D. Field Samples

1. At locations required, provide a Sample of sealant for each typical installation, approximately 24 inches long, including joint preparation, backing, sealant and tooling. Allow backing to extend 6 inches beyond end of sealant for inspection of substrate.

E. Mock-ups

F. Pre-installation Meetings

1.07 DELIVERY, STORAGE, AND HANDLING

A. Packing, Shipping, Handling, and Unloading

B. Storage and Protection

1. Sealants shall be stored and installed at temperatures as recommended by manufacturer.

1.08 PROJECT CONDITIONS

1.09 SEQUENCING

1.10 SCHEDULING

1.11 WARRANTY

1. Five (5) year material warranty, two-year installation/application warranty.

1.12 SYSTEM STARTUP

1.13 OWNER'S INSTRUCTIONS

1.14 COMMISSIONING

1.15 MAINTENANCE

PART 2 PRODUCTS

2.01 MANUFACTURERS

A. Tremco Commercial Sealants & Waterproofing, 3735 Green Rd., Beachwood, OH, 44122, or equal.

B. Pecora Corporation, 165 Wambold Road, Harleysville, PA 19438

C. Dow Corning Corporation, P.O. Box 994, Midland, MI 48686

2.02 EXISTING PRODUCTS

2.03 MATERIALS

A. Sealants

Sealants shall have normal curing schedules, shall be non-staining, color fast and shall resist deterioration due to ultraviolet radiation.

1. Sealant 1: Acrylic Latex, Non-Sag, Single-Component
   a. (Tremco) Tremflex 834
   b. (Pecora) AC-20+Silicone
2. Sealant 2: Butyl, Non-Sag, Single-Component
   a. (Tremco) Butyl Sealant
   b. (Pecora Corp) BC-158.
3. Sealant 3: Butyl, Non-Sag, Single-Component, Acoustical
   a. (Tremco) Acoustical Sealant
   b. (Pecora) BA-98
4. Sealant 4: Silicone, Non-Sag, Single-Component
   a. (Tremco) Spectrem 1
   b. (Pecora) 864 NST
5. Sealant 5: Silicone, Non-Sag, Single Component, Mildew-Resistant
   a. (Pecora) 898 NST, Color selected by architect
   b. (Dow Corning) 786, Color selected by architect
6. Sealant 6: Polyurethane, Non-Sag, Single Component
   a. (Tremco) Dymonic 100
   b. (Pecora) DynaTrol I-XL
7. Sealant 7: Polyurethane, Non-Sag, Multi-Component
   a. (Tremco) Dymeric 240FC
   b. (Pecora) DynaTrol II

B. Fire Rated Sealants
   1. See Section 07 84 43 Joint Firestopping

C. Joint Backing
   1. ASTM D1056; round, closed cell Polyethylene Foam Rod; oversized 30 to 50 percent larger than joint width, reticulated polyolefin foam.

D. Primer:
   1. Provide primer as required. Non-staining Type.
   2. Primer shall be a product of manufacturer of installed sealant.
   3. Primer shall be compatible with not only sealant, but substrate and finish on which to be applied.
   4. Primer must have been tested for durability on the surfaces to be sealed and specifically recommended for this installation by the manufacturer.

E. Bond Breaker:
   1. Pressure sensitive tape recommended by sealant manufacturer.
      a. Polyethylene tape, pressure sensitive adhesive, with the adhesive required only to hold tape to the construction material.
      b. Aluminum foil conforming to MIL-SPEC-Mil-A-148E.
      c. Wax paper conforming to Federal Specification UU-P-270

2.04 MANUFACTURED UNITS

2.05 EQUIPMENT

2.06 COMPONENTS

2.07 ACCESSORIES

2.08 MIXES

2.09 FABRICATION
2.10 FINISHES
2.11 SOURCE QUALITY CONTROL

PART 3 EXECUTION

3.01 INSTALLERS
- A. Sealants shall be installed by experienced mechanics using specified materials and proper tools.

3.02 EXAMINATION
- A. Site Verification of Conditions
  1. Verify that joint openings are ready to receive Work and field tolerances are within the guidelines recommended by sealant manufacturer.

3.03 PREPARATION
- A. Protection
  1. Protect elements surrounding Work of this section from damage or disfiguration.
- B. Surface Preparation
  1. Joints and spaces to be sealed shall be completely cleaned of all dirt, dust, mortar, oil, and other foreign materials which might adversely affect sealing Work. Where necessary, degrease with a solvent or commercial degreasing agent. Surfaces shall be thoroughly dry before application of sealants.
  2. If recommended by manufacturer, remove paint and other protective coatings from surfaces to be sealed before priming and installation of sealants.
  3. Preparation of surfaces to receive sealant shall conform to the sealant manufacturer's specifications. Provide air pressure or other methods to achieve required results. Provide masking tape to keep sealants off surfaces that will be exposed in finished Work.
  4. Etch concrete or masonry surfaces to remove excess alkalinity, unless sealant manufacturer's printed instructions indicate that alkalinity does not interfere with sealant bond and performance. Etch with 5 percent solution of muriatic acid; neutralize with dilute ammonia solution, rinse thoroughly with water and allow to dry before sealant installation.
  5. Perform preparation in accordance with ASTM C804 for solvent release sealants, and ASTM C962 for elastomeric sealants.
  6. Concrete, masonry, and other porous surfaces, and any other surfaces if recommended by manufacturer, shall be primed before installing sealants. Primer shall be installed with a brush that will reach all parts of joints to be filled with sealant.

3.04 ERECTION
3.05 INSTALLATION
3.06 APPLICATION
- A. Provide sealant around all openings in exterior walls, and any other locations indicated or required for structure weatherproofing and/or waterproofing.

B. Sealants shall be installed with guns furnished with proper size nozzles. Sufficient pressure shall be furnished to fill all voids and joints solid. In sealing around openings, include entire perimeter of each opening, unless indicated or specified otherwise. Where gun installation is impracticable, suitable hand tools shall be provided.

C. Sealed joints shall be neatly pointed on flush surfaces with beading tool, and internal corners with a special tool. Excess material shall be cleanly removed. Sealant, where exposed, shall be free of wrinkles and uniformly smooth. Sealing shall be complete before final coats of paint are installed.

D. Partially fill joints with joint backing material, furnishing only compatible materials, until joint depth does not exceed 1/2-inch joint width. Minimum joint width for metal to metal joints shall be 1/4-inch. Joint depth shall be not less than 1/4 inch and not greater than 1/2-inch.

E. Install sealant under sufficient pressure to completely fill voids. Finish exposed joints smooth, flush with surfaces or recessed as indicated. Install non-tracking sealant to concrete expansion joints subject to foot or vehicular traffic.

F. Where joint depth prevents installation of standard bond breaker backing rod, furnish non-adhering tape covering to prevent bonding of sealant to back of joint. Under no circumstances shall sealant depth exceed 1/2 inch maximum, unless specifically indicated on Drawings.

G. Sealants shall cure in accordance with manufacturer's printed recommendations. Do not disturb seal until completely cured.

3.07 CONSTRUCTION

3.08 REPAIR/RESTORATION

3.09 RE-INSTALLATION

3.10 FIELD QUALITY CONTROL

A. Site Test, Inspection

1. Sealants shall not be installed when they become too jelled to be discharged in a continuous flow from gun. Modification of sealants by addition of liquids, solvents, or powders is not permitted.

3.11 ADJUSTING

3.12 CLEANING

A. Remove rubbish, debris, and waste materials and legally dispose of off the Project site.

3.13 DEMONSTRATION

3.14 PROTECTION

A. Protect the Work of this section until Substantial Completion.

3.15 SCHEDULES

A. Application

Location	Type
Interior gypsum board, all interior joints not scheduled	Sealant 1
Under thresholds	Sealant 2
Interior door/window frames -Heads, Jambs, Sills	Sealant 3
Exterior door and window frames.	Sealant 4
Joints within glazed curtain wall system	Sealant 4
Skylight framing system	Sealant 4
Glass and glazing	Sealant 4
Joints in ceramic tile and at plumbing fixtures	Sealant 5
Between metal and concrete, masonry, and mortar	Sealant 6
Exterior and interior vertical joints in concrete and masonry metal flashing	Sealant 6
Interior joints in horizontal surfaces of concrete	Sealant 7

END OF SECTION

SECTION 08 11 13
HOLLOW METAL DOORS AND FRAMES

PART 1 GENERAL

1.01 SUMMARY

A. Section Includes
   1. Hollow metal doors
   2. Hollow metal frames
   3. Hollow metal sidelights and borrowed lights

B. Products Supplied But Not Installed Under This Section

C. Products Installed But Not Supplied Under This Section

D. Related Sections
   1. 07 62 00 Sheet Metal Flashing and Trim
   2. 07 65 26 Self-Adhering Sheet Flashing
   3. 07 92 00 Joint Sealants
   4. 08 71 00 Door Hardware
   5. 08 80 00 Glazing
   6. 09 91 13 Exterior Painting
   7. 09 91 23 Interior Painting

E. Allowances

F. Unit Prices

G. Measurement Procedures

H. Payment Procedures

I. Alternates

1.02 REFERENCES

A. ASTM A568 - Standard Specification for Steel Sheet, Carbon, and High-Strength, Low-Alloy, Hot-Rolled and Cold-Rolled, General Requirements for.

B. ASTM A591 - Standard Specification for Steel Sheet, Zinc-Coated (Galvanized) or Zinc-Iron Alloy-Coated (Galvannealed) by the Hop-Dip Process

C. ASTM A653 - Standard Specification for Steel Sheet, Zinc-Coated (Galvanized) or Zinc-Iron Alloy-Coated (Galvannealed) by the Hot-Dip Process.

D. ASTM A924 - Standard Specification for General Requirements for Steel Sheet, Metallic-Coated by the Hot-Dip Process.

E. ASTM A1008 - Standard Specification for Steel Sheet, Cold-Rolled, Carbon, Structural, High-Strength Low-Alloy and High-Strength Low-Alloy with Improved Formability.

F. ASTM A1011 - Standard Specification for Steel Sheet and Strip, Hot-Rolled, Carbon, Structural, High-Strength Low-Alloy and High-Strength Low-Alloy with Improved Formability.

G. ANSI/SDI A250.3 - Test Procedure and Acceptance Criteria for Factory Applied Finish Painted Steel Surfaces for Steel Doors and Frames.

H. ANSI/SDI A250.4 - Test Procedure and Acceptance Criteria for Physical Endurance for Steel Doors, Frames, Frame Anchors and Hardware Reinforcing.

I. ANSI/SDI A250.6 Recommended Practice for Hardware Reinforcing on Standard Steel Doors and Frames.

J. ANSI/SDI A250.8 - SDI-100 Recommended Specifications for Standard Steel Doors and Frames; 1998.

K. ANSI/SDI A250.10 - Test Procedure and Acceptance Criteria for Prime Painted Steel Surfaces for Steel Doors and Frames.
L. ANSI/SDI A250.11 - Recommended Erection Instructions for Steel Frames (Formerly SDI-105).
M. DHI A115.1G - Installation Guide for Doors and Hardware.
N. SDI 111 - Recommended Standard Details for Steel Doors & Frames.
O. ANSI/NFPA 252 - Fire Tests of Door Assemblies.
P. ANSI/UL 10B - Fire Tests of Door Assemblies.
Q. ANSI/UL 10C - Positive Pressure Fire Tests of Door Assemblies.
R. ANSI/UL 1784 - Air Leakage Tests of Door Assemblies
S. UL - Building Materials Directory; Underwriters Laboratories Inc.
T. WH - Certification Listings; Warnock Hersey International Inc.
U. NFPA 80 - Standard for Fire Doors and Other Opening Protectives.

1.03 DEFINITIONS
A. MSG: Manufacturers Standard Gage
B. SDI: Steel Door Institute
C. HMMA: Hollow Metal Manufacturers' Association
D. DHI: The Door and Hardware Institute

1.04 SYSTEM DESCRIPTIONS

1.05 SUBMITTALS
A. Product Data
1. Submit manufacturer's data sheets on each product to be used, including:
a. Preparation instructions and recommendations
b. Storage and handling requirements and recommendations
c. Installation methods
d. Manufacturers' technical data manual
e. Submit ANSI/SDI A250.8 – Current Edition
B. Shop Drawings
1. Show all openings in the door schedule and/or the Drawings.
2. Provide details of door design, door construction details and methods of assembling sections, hardware locations, anchorage and fastening methods, door frame types and details including throat dimensions by analyzing all wall sections, wall assemblies, materials, structural drawings, anchor types and spacing, and finish requirements.
3. Provide door, frame, and hardware schedule in accordance with SDI 111.
C. Samples
D. Quality Assurance/Control Submittals
1. Design Data, Test Reports, Certificates, Manufacturers' Instructions, Manufacturers' Field Reports, Qualification Statements
a. Provide manufacturer's certification that products comply with referenced standards as applicable.
b. Provide evidence of manufacturer's membership in the Steel Door Institute.
E. Closeout Submittals

1.06 QUALITY ASSURANCE
A. Qualifications

1. Provide all products from a single manufacturer who is a member of the Steel Door Institute.
2. Doors and frames shall conform to the requirements of ANSI A250.8-(R2008) (SDI-100) and other specifications herein named.
3. Fire-Ratings as indicated on the opening Schedule, when tested in accordance with NFPA 252 or UL 10C.
    a. Labeled by UL, WH, or other agency acceptable to the authority having jurisdiction.
    b. Stairwell Doors: 250 degrees F or 450 degrees F temperature rise rating as well as the required fire rating.

B. Regulatory Requirements
1. Automatic and power-assisted doors and gates shall comply with **CBC Section 11B-404.3**.
2. Doors and doorways that are part of an accessible route shall comply with **CBC Section 11B-404**.
3. The clear opening width for a door shall be 32 inches minimum. For a swinging door it shall be measured between the face of the door and the stop, with the door open 90 degrees. The shall be no projections into the opening below 34 inches and 4 inches maximum projections into the opening between 34 inches and 80 inches above the finish floor or ground. Door closers and stops shall be permitted to be 78 inches minimum above the finish floor or ground. **CBC Section 11B-404.2.3**.
4. Handles, pulls, latches, locks, and other operable parts on accessible doors shall comply with **CBC Section 11B-309.4** and be operable with one hand and shall not require tight grasping, pinching, or twisting of the wrist. Operable parts of such hardware shall be 34 inches minimum and 44 inches maximum above the finish floor or ground. Where sliding doors are in the fully open position, operating hardware shall be exposed and usable from both sides. **CBC Section 11B-404.2.7**.
5. The force for pushing or pulling open a door shall be as follows: **CBC Section 11B-404.2.9**.
    a. Interior hinged doors, sliding or folding doors, and exterior hinged doors: 5 lbs. (22.2N) maximum.
    b. Required fire doors: the minimum opening force allowable by the DSA Authority, not to exceed 15 lbs. (67N) maximum.
    c. The force required to activate any operable parts, such as retracting latch bolts or disengaging other devices shall be 5 lbs. (22.2N) maximum to comply with **CBC Section 11B-309.4.**
6. Door closing speeds shall be as follows: **CBC Section 11B-404.2.8**.
    a. Closer shall be adjusted so that the required time to move a door from an open position of 90 degrees to a position of 12 degrees from the latch is 5 seconds minimum.
    b. Spring hinges shall be adjusted so that the required time to move a door from an open position of 70 degrees to the closed position is 1.5 seconds minimum.
7. Thresholds shall comply with **CBC Section 11B-404.2.5**.
8. Floor stops shall not be located in the path of travel and 4 inches maximum from walls, per **DSA Policy 99-08**.
9. Hardware (including exit devices) shall not be provided with “Night Latch” (NL) function for any accessible doors or gates unless the

following conditions are met per **DSA Interpretation 10-08 DSA / AC (External) revised 4/28/09**. Such conditions must be clearly demonstrated and indicated in the specifications:

a. Such hardware has a 'dogging' feature.
b. It is dogged during the time the facility is open.
c. Such 'dogging' operation is performed only by employees as their job function (non-public use).

10. Pair of doors: Limit swing of one leaf to 90 degrees so that a clear floor space is provided beyond the arc of the swing for the wall-mounted tactile sign. **CBC Section 11B-703.4.2.1**.
11. Exit device touchpad shall be compliant with **State Fire Marshall Standard 12-10-3, Section 12-10-302**.
12. Comply with **CBC Chapter 10.**

C. Certifications
D. Field Samples
E. Mock-ups
F. Pre-installation Meetings

1.07 DELIVERY, STORAGE, AND HANDLING

A. Packing, Shipping, Handling, and Unloading
B. Acceptance at Site
   1. Products shall be marked with Architect's opening number on all doors, frames, misc. parts and cartons.
   2. Upon delivery, inspect all materials for damage; notify shipper and supplier if damage is found.
C. Storage and Protection
   1. Protect products from moisture, construction traffic, and damage.
   2. Store vertically under cover.
   3. Place units on 4 inch high wood sills or in a manner that will prevent rust or damage.
   4. Do not use non-vented plastic or canvas shelters that can create a humidity chamber.
   5. Should wrappers become wet, remove immediately.
   6. Provide ¼-inch space between doors to promote air circulation.
   7. If the wrapper on the door becomes wet, it must be removed immediately.
D. Waste Management and Disposal

1.08 PROJECT CONDITIONS

1.09 SEQUENCING

A. Coordinate with door opening construction and door frame and door hardware installation.

1.10 SCHEDULING

1.11 WARRANTY

1.12 SYSTEM STARTUP

1.13 OWNER'S INSTRUCTIONS

1.14 COMMISSIONING

1.15 MAINTENANCE

A. Extra Materials
B. Maintenance Service

1. It is the responsibility of the installer to properly maintain doors and frames in accordance with SDI-124, Maintenance of Standard Steel Doors and Frames until date of Substantial Completion.

PART 2 PRODUCTS

2.01 MANUFACTURERS

A. Door Components Inc., 7980 Redwood Ave, Fontana, CA 92336, or Equal.
B. Curries/ASSA ABLOY, 5678 Concours Street, Ontario, CA 91764
C. Steelcraft/Allegion, 1520 Bridgegate Drive, Suite 100, Diamond Bar, CA 91765
D. Republic, 155 Republic Drive, McKenzie, TN 38201
E. Security Metal Products/ASSA ABLOY, 5700 Hannum Ave. #250, Culver City, CA 90230

2.02 EXISTING PRODUCTS

2.03 MATERIALS

A. Doors, frames, frame anchors, and hardware reinforcing for each of the levels and models specified shall be provided to meet the requirements of the performance levels specified. The material used in manufacturing these products and components shall comply with ANSI/SDI A250.8.
B. Hardware reinforcing on doors and frames shall comply with ANSI/SDI A250.6.
C. The physical performance levels shall be in accordance with ANSI/SDI A250.4.
D. All steels used to manufacture doors, frames, anchors, and accessories shall meet at least one or more of the following requirements:
    1. Cold rolled steel shall conform to ASTM A1008 and A568.
    2. Hot rolled, pickled and oiled steel shall comply with ASTM A1011 and A568.
    3. Hot dipped zinc coated steel shall be of the alloyed type and comply with ASTM A924 and A653.
    4. Steel Sheet, Electrolytic Zinc-Coated shall conform to ASTM A591.
E. Frames
    1. Provide Levels and Models in accordance with ANSI/SDI A250.8 and in the configuration and sizes as indicated:
        a. Interior frames: Frame configuration and depth as indicated on the drawings. Minimum thickness as follows:
            1. Level 3 Extra heavy-duty: For use with: Door Model 2 (seamless design): 0.053 inch (MSG. No. 16) minimum steel frame thickness with continuously welded seam dressed smooth.
        b. Exterior frames: Provide in accordance with ANSI/SDI A250.8 in the frame configuration and depth as indicated on the drawings. Minimum thickness as follows:
            1. Level 3 Extra heavy-duty: For use with: Door Model 2 (seamless design): 0.053 inch (MSG. No. 16) minimum steel frame thickness with continuously welded seam dressed smooth.
    2. Provide units of galvanized steel in the following locations:
        a. Exterior openings
        b. Kitchens
        c. Restrooms

d. Washrooms
e. Locker rooms
f. Showers
g. Laboratories
h. Laundry Rooms

3. Provide full profile welded (Continuously welded) type frames unless noted otherwise.
4. Provide frames with welded to frame anchors as detailed on drawings. Slip-in or twist-in anchors shall not be permitted.
5. Prepare all frames for all mortise template hardware. Frames shall be reinforced, drilled and tapped to receive mortised hinges, locks, latches, and flush bolts as required. Preparation shall be in accordance with ANSI/BHMA A156.115 American National Standard for Hardware Preparations in Steel Doors and Steel Frames and ANSI/SDI A250.6, Recommended Practice for Hardware Reinforcing on Standard Steel Doors and Frames.
6. Frames shall be reinforced for surface applied hardware.
7. Minimum hardware reinforcing gages shall comply with Table 4 of ANSI/SDI A250.8.
8. Provide screw applied design glazing stops and beads where glazed lights are indicated.
9. Terminated (Hospital) Stops for exterior and interior door frames shall be terminated above the finish floor 1-inch, measured from the frame bottom to bottom of terminated stop. The stop shall be cut at a 45-degree angle and closed with a steel filler plate welded in place.

F. Doors

1. Provide Levels and Models in accordance with ANSI/SDI A250.8 and in the configuration and sizes as indicated:
   a. Interior doors: Provide interior doors in accordance with ANSI/SDI A250.8 and in the configuration and sizes as indicated:
      1. Level 3 - Extra heavy-duty 1-3/4 inches:
         Model 2 - Seamless
   b. Exterior doors: Provide exterior doors in accordance with ANSI/SDI A250.8 and in the configuration and size as indicated on the opening schedule:
      1. Level 3 - Extra heavy-duty 1-3/4 inches:
         Model 2 - Seamless
2. Face steel sheet shall meet at least one or more of the following requirements:
   a. Level 3
      Model 2 - 0.053 inch (MSG No. 16) minimum thickness
3. End closure: The top and bottom of the doors shall be closed with flush closures channels. The flush closures channels shall have a minimum material thickness of 0.042 inch (MSG No. 18).
   a. Flush closure channels: Set back face of channel web flush with door top/bottom.
4. Core: Provide in accordance with ANSI/SDI A250.8.
   a. Non-Fire-Rated Doors: Polystyrene
   b. Fire-Rated Doors: Mineral Board
5. Door edge design: Provide in accordance with ANSI/SDI A250.8.
   a. Beveled edge

6. Prepare all doors for all mortise template hardware. Frames shall be reinforced, drilled and tapped to receive mortised hinges, locks, latches, and flush bolts as required. Preparation shall be in accordance with ANSI/BHMA A156.115 American National Standard for Hardware Preparations in Steel Doors and Steel Frames and ANSI/SDI A250.6, Recommended Practice for Hardware Reinforcing on Standard Steel Doors and Frames.
7. Doors shall be reinforced for surface applied hardware.
8. Minimum hardware reinforcing gages shall comply with Table 4 of ANSI/SDI A250.8.
9. Provide screw applied design glazing stops and beads where glazed lights are indicated.
10. Provide louvers and vision lutes where indicated on the Drawings in accordance with ANSI/SDI A250.8.
11. Provide steel astragals where indicated on the Drawings or where required by the manufacturer's listing.

2.04 MANUFACTURED UNITS
2.05 EQUIPMENT
2.06 COMPONENTS
2.07 ACCESSORIES
2.08 MIXES
2.09 FABRICATION

A. Shop Assembly
1. Fabricate doors and frames in accordance with ANSI/SDI A250.8.
2. Design clearances
a. Fabricate doors and frames to maintain the following clearances:
1. The clearance between the door and frame shall be 1/8 inch in the case of both single swing and pairs of doors.
2. The clearance between the meeting edges of pairs of doors shall be 3/16 inch plus or minus 1/16 inch. For fire rated applications, the clearances between the meeting edges of pairs of doors shall be 1/8 inch plus or minus 1/16 inch.
3. Interior doors: The clearance measured from the bottom of the door to the bottom of the frame (undercut) shall be a maximum of 3/4 inch unless otherwise specified. Fire door undercuts shall comply with ANSI/NFPA 80, "Fire Doors and Fire Windows."
4. Exterior Doors: The clearance measured from the bottom of the door to the bottom of the frame (undercut) shall be 5/8 inch unless otherwise specified.
5. The clearance between the face of the door and the stop shall be 1/16 inch to 3/32 inch.
6. All clearances shall be, unless otherwise specified in this document, subject to a tolerance of plus or minus 1/32 inch.

2.10 FINISHES

A. Shop Priming, Shop Finishing
   1. Prime finish
      a. Doors and frames shall be thoroughly cleaned, and chemically treated to ensure maximum paint adhesion.
      b. All surfaces of the door and frame exposed to view shall receive a factory applied coat of rust inhibiting primer, either air-dried or baked-on. The finish shall meet the requirements for acceptance stated in ANSI/SDI A250.10 "Test Procedure and Acceptance Criteria for Prime Painted Steel Surfaces for Steel Doors and Frames."

2.11 SOURCE QUALITY CONTROL

PART 3 EXECUTION

3.01 INSTALLERS

3.02 EXAMINATION

A. Site Verification of Conditions
   1. Verify that project conditions are suitable before beginning installation of frames. Do not begin installation until conditions have been properly prepared.
   2. Verify that completed concrete or masonry openings to receive butt type frames are of correct size.
   3. Verify that gypsum board construction walls are the correct thickness.

3.03 PREPARATION

A. If opening preparation is the responsibility of another installer, notify Architect of unsatisfactory preparation before proceeding.

3.04 ERECTION

3.05 INSTALLATION

A. Install frames plumb, level, rigid, and in true alignment in accordance with ANSI/SDI A250.11 and Drawings.
B. Inspect and install fire rated doors and frames in accordance with NFPA 80 and their listing.
C. All frames shall be fastened to the adjacent structure so as to retain their position and stability.
D. Install frames as masonry is laid-up. Fill welded wrap-around frames in masonry construction solid with grout. Brace or fasten frame in such a way to prevent pressure of the grout from deforming frame. Coordinate with work specified in Section 04 22 00 Concrete Unit Masonry.
E. Install frames in Portland cement plaster construction as work progresses. Fill welded wrap-around frames solid with grout where indicated. Brace or fasten frame in such a way to prevent pressure of the grout from deforming frame. Coordinate with work specified in Section 09 24 00 Portland Cement Plaster.
F. Grout shall be mixed to provide a 4-inch maximum slump consistency, hand troweled into place. Grout mixed to a thin "pumpable" consistency shall not be used.
G. If additives are used in masonry or plaster work during cold weather, field coat the inside of steel frames with a bituminous compound to prevent corrosion.

H. Doors shall be installed and fastened to maintain alignment with frames to achieve maximum operational effectiveness and appearance. Doors shall be adjusted to maintain perimeter clearances specified. Shimming shall be performed by the installer as needed to assure the proper clearances are achieved.

I. Install hardware items in accordance with section 08 71 00 Door Hardware, the hardware manufacturer's recommendations and templates, and ANSI/SDI A250.6, Recommended Practice for Hardware Reinforcing on Standard Steel Doors and Frames.

3.06 APPLICATION

3.07 CONSTRUCTION

3.08 REPAIR/RESTORATION

A. Any repair required to either the door or frame in a fire rated opening shall be conducted in accordance with NFPA 80.

3.09 RE-INSTALLATION

3.10 FIELD QUALITY CONTROL

3.11 ADJUSTING

A. Adjust doors for proper operation, free from binding or other defects.

3.12 CLEANING

A. Clean and restore soiled surfaces. Remove scraps and debris and leave site in a clean condition.

3.13 DEMONSTRATION

3.14 PROTECTION

A. Protect installed products until completion of project.

B. Touch-up, repair or replace damaged products before Substantial Completion.

3.15 SCHEDULES

A. Refer to Opening Schedule on Drawings.

END OF SECTION

SECTION 08 16 13
FIBERGLASS DOORS AND FRAMES

PART 1 GENERAL

1.01 SUMMARY
- A. Section Includes
  1. Fiberglass doors
  2. Fiberglass door and window frames
  3. Fiberglass sidelights and borrowd lights
- B. Products Supplied But Not Installed Under This Section
- C. Products Installed But Not Supplied Under This Section
- D. Related Sections
  1. 07 62 00 Sheet Metal Flashing and Trim
  2. 07 92 00 Joint Sealants
  3. 08 54 13 Fiberglass Windows
  4. 08 71 00 Door Hardware
  5. 08 80 00 Glazing
- E. Allowances
- F. Unit Prices
- G. Measurement Procedures
- H. Payment Procedures
- I. Alternates

1.02 REFERENCES
- A. TESTING APPLICATION STANDARD (TAS) 201-(CURRENT EDITION) IMPACT TEST PROCEDURES

1.03 DEFINITIONS

1.04 SYSTEM DESCRIPTIONS

1.05 SUBMITTALS
- A. Product Data
  1. Submit manufacturer's data sheets on each product to be used, including:
     a. Preparation instructions and recommendations
     b. Storage and handling requirements and recommendations
     c. Installation methods
     d. Manufacturers’ technical data manual
- B. Shop Drawings
  1. Show all openings in the door schedule and/or the Drawings.
  2. Provide details of door design, door construction details and methods of assembling sections, hardware locations, anchorage and fastening methods, door frame types and details including throat dimensions by analyzing all wall sections, wall assemblies, materials, structural drawings, anchor types and spacing, and finish requirements.
  3. Provide door, frame, and hardware schedule.
- C. Samples
  1. Provide one complete manufactured door sample which represents all aspects of the typical manufacturing process, including molded in gelcoat color and face plate construction. One edge should expose the interior of the door depicting the unique u-shaped

continuous piece stile and rail, hardware reinforcement and core material.

D. Quality Assurance/Control Submittals
   1. Design Data, Test Reports, Certificates, Manufacturers' Instructions, Manufacturers' Field Reports, Qualification Statements
      a. Provide manufacturer's certification that products comply with referenced standards as applicable.

E. Closeout Submittals

1.06 QUALITY ASSURANCE

A. Qualifications
   1. Provide all products from a single manufacturer.
   2. Installer Qualifications: An experienced installer who has completed fiberglass door and frame installations similar in material, design, and extent to those indicated and whose work has resulted in construction with a record of successful in-service performance.

B. Regulatory Requirements
   1. Automatic and power-assisted doors and gates shall comply with **CBC Section 11B-404.3**.
   2. Doors and doorways that are part of an accessible route shall comply with **CBC Section 11B-404**.
   3. The clear opening width for a door shall be 32 inches minimum. For a swinging door it shall be measured between the face of the door and the stop, with the door open 90 degrees. The shall be no projections into the opening below 34 inches and 4 inches maximum projections into the opening between 34 inches and 80 inches above the finish floor or ground. Door closers and stops shall be permitted to be 78 inches minimum above the finish floor or ground. **CBC Section 11B-404.2.3**.
   4. Handles, pulls, latches, locks, and other operable parts on accessible doors shall comply with **CBC Section 11B-309.4** and be operable with one hand and shall not require tight grasping, pinching, or twisting of the wrist. Operable parts of such hardware shall be 34 inches minimum and 44 inches maximum above the finish floor or ground. Where sliding doors are in the fully open position, operating hardware shall be exposed and usable from both sides. **CBC Section 11B-404.2.7**.
   5. The force for pushing or pulling open a door shall be as follows: **CBC Section 11B-404.2.9**.
      a. Interior hinged doors, sliding or folding doors, and exterior hinged doors: 5 lbs. (22.2N) maximum.
      b. Required fire doors: the minimum opening force allowable by the DSA Authority, not to exceed 15 lbs. (67N) maximum.
      c. The force required to activate any operable parts, such as retracting latch bolts or disengaging other devices shall be 5 lbs. (22.2N) maximum to comply with **CBC Section 11B-309.4.**
   6. Door closing speeds shall be as follows: **CBC Section 11B-404.2.8**.
      a. Closer shall be adjusted so that the required time to move a door from an open position of 90 degrees to a position of 12 degrees from the latch is 5 seconds minimum.

b. Spring hinges shall be adjusted so that the required time to move a door from an open position of 70 degrees to the closed position is 1.5 seconds minimum.

7. Thresholds shall comply with **CBC Section 11B-404.2.5**.
8. Floor stops shall not be located in the path of travel and 4 inches maximum from walls, per **DSA Policy 99-08**.
9. Hardware (including exit devices) shall not be provided with "Night Latch" (NL) function for any accessible doors or gates unless the following conditions are met per **DSA Interpretation 10-08 DSA / AC (External) revised 4/28/09**. Such conditions must be clearly demonstrated and indicated in the specifications:
   a. Such hardware has a 'dogging' feature.
   b. It is dogged during the time the facility is open.
   c. Such 'dogging' operation is performed only by employees as their job function (non-public use).
10. Pair of doors: Limit swing of one leaf to 90 degrees so that a clear floor space is provided beyond the arc of the swing for the wall-mounted tactile sign. **CBC Section 11B-703.4.2.1**.
11. Exit device touchpad shall be compliant with **State Fire Marshall Standard 12-10-3, Section 12-10-302**.
12. Comply with **CBC Chapter 10.**

C. Certifications
D. Field Samples
E. Mock-ups
F. Pre-installation Meetings

1.07 DELIVERY, STORAGE, AND HANDLING

A. Packing, Shipping, Handling, and Unloading
   1. All single doors to be shipped completely assembled in the frame with hardware installed. Double doors to be prehung at the factory to ensure a proper fit and that hardware functions properly, then disassembled for shipping purposes.
   2. Each door and frame shall be delivered individually crated for protection from damage in cardboard containers, clearly marked with project information, door location, specific reference number as shown on drawings, and shipping information. Each crate shall contain all fasteners necessary for installation as well as complete installation instructions.
   3. Doors shall be stored in the original container on edge, out of inclement weather for protection against the elements.
   4. Handle doors pursuant to the manufacturer's recommendations as posted on outside of crate.

B. Acceptance at Site
   1. Products shall be marked with Architect's opening number on all doors, frames, misc. parts and cartons.
   2. Upon delivery, inspect all materials for damage; notify shipper and supplier if damage is found.

C. Storage and Protection
   1. Protect products from moisture, construction traffic, and damage.
   2. Store vertically under cover.

D. Waste Management and Disposal

1.08 PROJECT CONDITIONS
1.09 SEQUENCING
A. Coordinate with door opening construction and door frame and door hardware installation.

1.10 SCHEDULING
1.11 WARRANTY
A. All fiberglass doors and frames have a lifetime guarantee against failure due to corrosion.
B. All fiberglass doors and fiberglass frames shall be guaranteed for ten years against failure due to materials and workmanship, including warp, separation or delamination, and expansion of the core.

1.12 SYSTEM STARTUP
1.13 OWNER'S INSTRUCTIONS
1.14 COMMISSIONING
1.15 MAINTENANCE

PART 2 PRODUCTS

2.01 MANUFACTURERS
A. Chem-Pruf Door Co., Ltd., P.O. Box 4560, Brownsville, TX

2.02 EXISTING PRODUCTS
2.03 MATERIALS
A. Fiberglass Doors
1. Doors
a. Shall be made of fiberglass reinforced plastic (FRP) using Class 1 premium resin with no fillers that is specifically tailored to resist chemicals and contaminants Doors shall be 1 ¾ inch thick and of flush construction, having no seams or cracks.
2. Door Plates
a. Shall be 0.125 inch thick minimum, molded in one continuous piece, starting with 25 mil gelcoat of the color specified, integrally molded with multiple layers of 1.5 ounces per square foot fiberglass mat and one layer of 18 ounce per square yard fiberglass woven roving. Each layer shall be individually laminated with resin as mentioned above. Door plate weight shall not be less than 0.97 lbs per square foot at a ratio of 30/70 glass to resin. Plate alone to withstand Large Missile Impact per FBC TAS 201.
3. Stiles and Rails
a. Shall be constructed starting from the outside toward the inside, with a matrix of at least three layers of 1.5 ounce per square foot of fiberglass mat. The stile and rail shall be molded in one continuous piece to a U-shaped configuration and to the exact dimensions of the door. In this manner there will be no miter joints and disparate materials used to form the one-piece stile and rail.
4. Core Material

a. Shall be Polypropylene plastic honeycomb core with a non-woven polyester veil for unparalleled plate bonding, 180 PSI compression range.

5. Internal Reinforcement
   a. Shall be #2 SPF of sufficient amount to adequately support required hardware and function of same.
6. Finish
   a. Shall be identical with 25 mil resin-rich gelcoat of the specified color integrally molded in at time of manufacture resulting in a smooth gloss surface that is dense and non-porous. The gelcoat shall be cured within a temperature range of 120F to 170F creating an impermeable outer surface, uniform color throughout, and a permanent homogeneous bond with the resin/fiberglass substrate beneath. The finish of the door and frame must be field repairable without compromising the integrity of the original uniform composite structure, function or physical strength.
7. Vision Lites
   a. Shall be provided for at time of manufacture and shall be completely sealed so that the interior of the door is not exposed to the environment. Fiberglass retainers, which hold the glazing in place, shall be resin transfer molded with a profile that drains away from glazing. The window retainer must match the color and finish of the door plates with 25 mil of resin-rich gelcoat integrally molded in at time of manufacture. Mechanical fasteners shall not be used to attach retainers. Glass shall be furnished and installed by door and frame manufacturer. Window retainers fabricated from Metal, PVC or Vinyl will not be accepted.
8. Louvers
   a. Shall be completely sealed so that the interior of the door is not exposed to the environment. Louvers are to be solid fiberglass "V" Vanes and shall match the color and finish of the door plates.
9. Transoms
   a. shall be identical to the doors in finish, construction, materials, thickness and reinforcement.

B. Fiberglass Frames
1. Frames
   a. Shall be fiberglass and manufactured using the resin transfer method creating one solid piece (no voids) with complete uniformity in color and size. Beginning with a minimum 25 mil gelcoat layer molded in and a minimum of two layers of continuous strand fiberglass mat saturated with resin, the frame will be of one-piece construction with molded stop. All frame profiles shall have a core material of 2 psf polyurethane foam. Metal frames or pultruded fiberglass frames will not be accepted.
2. Finish
   a. Shall be identical to the door with 25 mil resin-rich gelcoat of the specified color integrally molded in at time of manufacture. The gelcoat shall be cured within a

temperature range of 120F to 170F creating an impermeable outer surface, uniform color throughout, and a permanent homogeneous bond with the resin/fiberglass substrate beneath. The finish of the door and frame must be field repairable without compromising the integrity of the original uniform composite structure, function or physical strength.

3. Jamb/Header
   a. Connection shall be mitered for tight fit.
4. Internal Reinforcement
   a. Shall be continuous within the structure to allow for mounting of specified hardware. Reinforcing material shall be a dense matrix of cloth glass fibers and premium resin with a minimum hinge screw holding value of 1000 lbs per screw. All reinforcing materials shall be completely encapsulated. Documented strength of frame screw holding value after third insert must be submitted. Dissimilar materials, such as steel, will be deemed unacceptable as reinforcement for hardware attachment.
5. Mortises (for Hardware)
   a. Shall be accurately machined by CNC to hold dimensions to +/- 0.010 inch in all three axis.
6. Hinge Pockets
   a. Shall be accurately machined by CNC to facilitate heavy duty hinges at all hinge locations, using shims when standard weight hinges are used.

C. Operating Hardware
   1. See Section 08 71 00 Door Hardware
   2. Door Hardware as specified for Fiberglass Doors and Frames shall be furnished and installed by the Fiberglass Door and Frame manufacturer.

D. Anchorage Hardware
   1. Install in accordance with drawings.
   2. All anchorage hardware (fasteners) shall be stainless steel.

2.04 MANUFACTURED UNITS
2.05 EQUIPMENT
2.06 COMPONENTS
2.07 ACCESSORIES
2.08 MIXES
2.09 FABRICATION
2.10 FINISHES
2.11 SOURCE QUALITY CONTROL

PART 3 EXECUTION

3.01 INSTALLERS

3.02 EXAMINATION

A. Site Verification of Conditions

1. Verify openings are correctly prepared to receive doors and frames.
2. Verify doors and frames have delivered to job site individually crated. Each crate is clearly marked with the specific opening information for quick and easy identification.
3. Verify openings are correct size and depth in accordance with Contract Documents and Submittal Documents.
4. Installer shall examine conditions under which construction activities of this section are to be performed. If site conditions are unacceptable, submit a written report to the Architect. Installer shall not proceed with installation until all unacceptable conditions have been corrected.
5. Proceeding with Work specified in this Section shall be interpreted to mean that all conditions were determined to be acceptable to the Contractor prior to start of installation.

3.03 PREPARATION

3.04 ERECTION

3.05 INSTALLATION

A. Install door opening assemblies in accordance with Contract Documents, approved submittals, and manufacturer's printed installation instructions, using installation methods and materials specified in installation instructions.

B. Field alteration of doors or frames to accommodate field conditions is strictly prohibited and will deem doors or frames as Non-Conforming Work.

C. Install all doors and frames plumb, level, square, and true to the tolerance specified in manufacturer's printed installation instructions.

3.06 APPLICATION

3.07 CONSTRUCTION

3.08 REPAIR/RESTORATION

3.09 RE-INSTALLATION

3.10 FIELD QUALITY CONTROL

3.11 ADJUSTING

A. Adjust doors in accordance with the door manufacturer's instructions and Article 1.06, Paragraph 'B' of this specification to swing open and shut without binding and to remain in place at any angle without being moved by gravitational influence.

B. Adjust hardware to operate correctly in accordance with hardware manufacturer's maintenance instruction.

3.12 CLEANING

A. Clean surfaces of door and frame opening assemblies and exposed hardware in accordance with respective manufacturer's maintenance instructions.

3.13 DEMONSTRATION

3.14 PROTECTION

A. Protect door and frame opening assemblies and hardware from damage by subsequent construction activities until final inspection.

3.15 SCHEDULES

END OF SECTION

SECTION 08 31 00
ACCESS DOORS AND PANELS

PART 1 GENERAL

1.01 SUMMARY
- A. Section Includes
  - 1. Access Doors and Panels
- B. Products Supplied But Not Installed Under This Section
- C. Products Installed But Not Supplied Under This Section
  - 1. Access doors and panels specified in Divisions 22 - Plumbing, 23 - HVAC, and 26 - Electrical.
- D. Related Sections
  - 1. 09 29 00 Gypsum Board
  - 2. 09 91 23 Interior Panting
- E. Allowances
- F. Unit Prices
- G. Measurement Procedures
- H. Payment Procedures
- I. Alternates

1.02 REFERENCES
1.03 DEFINITIONS
1.04 SYSTEM DESCRIPTIONS
1.05 SUBMITTALS
- A. Product Data
  - 1. Submit manufacturer's product data for items specified.
- B. Shop Drawings
  - 1. Submit manufacturer's product shop drawings for items specified.
- C. Samples
- D. Quality Assurance/Control Submittals
- E. Closeout Submittals

1.06 QUALITY ASSURANCE
1.07 DELIVERY, STORAGE, AND HANDLING
1.08 PROJECT CONDITIONS
1.09 SEQUENCING
1.10 SCHEDULING
1.11 WARRANTY
1.12 SYSTEM STARTUP
1.13 OWNER'S INSTRUCTIONS
1.14 COMMISSIONING
1.15 MAINTENANCE

PART 2 PRODUCTS

2.01 MANUFACTURERS
- A. Acudor, 4216 North Pecos Rd., Suite 104, Las Vegas, NV 89115, or equal.
- B. Milcor, 5030 Corporate Exchange Blvd S., Grand Rapids, MI 49512
- C. Karp, 260 Spagnoli Road, Melville, NY 11747

2.02 EXISTING PRODUCTS
2.03 MATERIALS

2.04 MANUFACTURED UNITS

1. Flush Access Doors (Surrounding Finish: Gypsum Board)
    a. Door
        1. (Acudor) DW-5040 Drywall
            aa. Size: 24-inch x 24-inch, or as indicated on drawings
            bb. Lock Type: Allen head cam latch
            cc. Material: 22 gauge carbon steel
            dd. Finish: Prime coat baked enamel
        2. (Milcor) Equivalent Product
        3. (Karp) Equivalent Product
2. Flush Access Doors (Surrounding Finish: Not Gypsum Board)
    a. Door
        1. (Acudor) UF-5000 Universal Flush
            aa. Size: 24-inch x 24-inch, or as indicated on drawings
            bb. Lock Type: Allen head cam latch
            cc. Material: 22 gauge Stainless Steel
            dd. Finish: #4 Satin Polish
        2. (Milcor) M-Architectural Grade Flush Door
        3. (Karp) DSC-214M

2.05 EQUIPMENT
2.06 COMPONENTS
2.07 ACCESSORIES
2.08 MIXES
2.09 FABRICATION
2.10 FINISHES
2.11 SOURCE QUALITY CONTROL

PART 3 EXECUTION

3.01 INSTALLERS
3.02 EXAMINATION
3.03 PREPARATION
3.04 ERECTION
3.05 INSTALLATION

A. Install access doors and panels accurately in location, plumb, straight, and true.
B. Examine panels after installation for proper opening, closing, latching, and locking.

3.06 APPLICATION
3.07 CONSTRUCTION
3.08 REPAIR/RESTORATION
3.09 RE-INSTALLATION
3.10 FIELD QUALITY CONTROL
3.11 ADJUSTING
3.12 CLEANING
3.13 DEMONSTRATION
3.14 PROTECTION
3.15 SCHEDULES

END OF SECTION

SECTION 08 51 13
ALUMINUM WINDOWS

PART 1 GENERAL

1.01 SUMMARY
- A. Section Includes
  - 1. Aluminum Hung Windows (Exterior)
- B. Products Supplied But Not Installed Under This Section
- C. Products Installed But Not Supplied Under This Section
- D. Related Sections
  - 1. 08 80 00 Glazing
- E. Allowances
- F. Unit Prices
- G. Measurement Procedures
- H. Payment Procedures
- I. Alternates

1.02 REFERENCES
- A. American Architectural Manufacturers Association (AAMA)
- B. American Society for Testing and Materials (ASTM)
- C. Aluminum Association (AA)

1.03 DEFINITIONS

1.04 SYSTEM DESCRIPTIONS
- A. Design Requirements, Performance Requirements
  - 1. General: In addition to requirements shown or specified, comply with:
    - a. Applicable provisions of AAMA Aluminum Storefront and Entrance Manual for design, materials, fabrication and installation of component parts.
    - b. Wind Load Design Criteria: ASCE 7-10
  - 2. Aluminum Window shall be suitable for outside or inside glazing. Glass shall be forward of frame, with optional structural silicone support at verticals and horizontals. Provides for two-color capability.
  - 3. Limit air leakage through assembly to 0.06 CFM/min/sq. ft. (.00003 m3/sm2) of wall area at 6.24 PSF (300 Pa) as measured in accordance with ASTM E283.
  - 4. Water Resistance: No water leakage when measured in accordance with ASTM E331 with a static test pressure of 12PSF.
  - 5. Dynamic Water Resistance: No water leakage, when measured in accordance with AAMA 501.1-94 with a dynamic test pressure of 12PSF.
  - 6. Limit mullion wind load deflection of L/175 with full recovery of glazing materials, when measured in accordance with ASTM E 330.
  - 7. System shall not deflect more than 1/8" at the center point, or 1/16" at the center point of a horizontal member, once deadload points have been established.
  - 8. System shall accommodate expansion and contraction movement due to surface temperature differential of 180 degrees F.
  - 9. Seismic testing shall conform to AAMA recommended static test method for evaluating performance of window wall systems due to

horizontal displacements associated with seismic movements and building sway.

10. Thermal performance – When tested in accordance with AAMA 1503.1, and 1502.7, the following results should be attained: U. maximum .63/CRF – minimum of 59.
11. National Fenestration Rating Council (NFRC) specific application evaluation.

1.05 SUBMITTALS

A. Product Data
   1. Submit manufacturer's data sheets on each product to be used, including:
      a. Preparation instructions and recommendations
      b. Storage and handling requirements and recommendations
      c. Installation methods
      d. Manufacturers' technical data manual

B. Shop Drawings
   1. Show all openings in the opening schedule and/or the Drawings.
   2. Provide details of storefront design, storefront construction details and methods of assembling sections, hardware locations, anchorage and fastening methods, door frame types and details, anchor types and spacing, and finish requirements.
   3. Provide door, frame, and hardware schedule

C. Samples
   1. Submit manufacturer's finish samples.

D. Quality Assurance/Control Submittals
   1. Design Data, Test Reports, Certificates, Manufacturers' Instructions, Manufacturers' Field Reports, Qualification Statements
      a. Provide manufacturer's certification that products comply with referenced standards as applicable.
      b. Provide test reports from AAMA accredited laboratories certifying the performances as specified in System Descriptions.

E. Closeout Submittals

1.06 QUALITY ASSURANCE

A. Qualifications
   1. Obtain, aluminum doors, aluminum windows, and aluminum-framed window walls and finish through one source from a single manufacturer.

B. Regulatory Requirements
   1. Operable parts and controls at unobstructed forward and side approach located at 48" to top of device: For reach requirements at other conditions, comply with 11B-308 as they apply. Operable parts shall be operable with one hand and shall not require tight grasping, pinching, or twisting of the wrist. The force required to activate operable parts shall be 5 pounds maximum. Operable parts shall also comply with CBC sections 11B-308.2, 11B-308.3, and 11B-309.4.

C. Certifications

D. Field Samples

E. Mock-ups

F. Pre-installation Meetings

1.07 DELIVERY, STORAGE, AND HANDLING
1.08 PROJECT CONDITIONS
1.09 SEQUENCING
1.10 SCHEDULING
1.11 WARRANTY
A. System shall be warranted against failure and/or deterioration of metals due to manufacturing process for a period of two (2) years.

1.12 SYSTEM STARTUP
1.13 OWNER'S INSTRUCTIONS
1.14 COMMISSIONING
1.15 MAINTENANCE

PART 2 PRODUCTS

2.01 MANUFACTURERS
A. Arcadia Inc., 2301 East Vernon Ave., Vernon, CA 90058 or Equal.

2.02 EXISTING PRODUCTS
2.03 MATERIALS
A. Framing members, transition members, mullions, adaptors, and mounting: Extruded 6063-T6 aluminum alloy (ASTM B221 – Alloy G.S. 10a T6).
B. Screws, fastening devices, and internal components: Aluminum, stainless steel, or zinc-plated steel in accordance with ASTM.A-164. Perimeter anchors shall be aluminum or steel, providing the steel is properly isolated from aluminum.
C. Glazing Gasket (Silicone Compatible)
1. Compression-type design, replaceable, molded or extruded santoprene, polyvinyl chloride (PVC), or ethylene propylene diene monomer (EPDM).
2. Shall be of type that locks securely into the glazing reglet to prevent glazing gaskets from disengaging.

2.04 MANUFACTURED UNITS
A. Aluminum Hung Windows (Exterior)
1. (Arcadia) 52 Series, Single/Double Hung, (Thermal)
a. Frame Profile: 3-1/4-inch x 3-5/16 inch
b. Glass Thickness: 1/2 inch
c. Glazing Location: Center Glazed
d. Options: Pass-Thru Sill, provide locking hardware

2.05 EQUIPMENT
2.06 COMPONENTS
2.07 ACCESSORIES
2.08 MIXES
2.09 FABRICATION
A. Shop Assembly
1. Fabrication Tolerances
a. Diverters shall be provided to collect water infiltration and divert from the interior of the system.

b. Framing members shall be internally reinforced and secured at head and sill as necessary for structural performance requirements, for hardware attachment, and as indicated.
c. Fasteners shall be so located as to ensure concealment from view in the final assembly.

2.10 FINISHES
A. Shop Priming, Shop Finishing
1. Fluorocarbon Coating: AAMA 2605.2.
a. Resin: 70% PVDF Kynar 500/Hylar 5000.
b. Substrate: cleaned and pretreated with chromium phosphate.
c. Primer: Manufacturer's standard resin base compatible coating. Dry film thickness.
1. Extrusion: Minimum 0.20 mil.
d. Color Coat: 70% PVDF, dry film thickness.
1. Extrusion: 1.0 mil.
e. Color: As selected by Architect from RAL color chart.
f. Acceptable Coatings Manufacturers:
1. PPG Industries, Inc.
2. Valspar Corporation
3. BASF

2.11 SOURCE QUALITY CONTROL

PART 3 EXECUTION

3.01 INSTALLERS
3.02 EXAMINATION
A. Site Verification of Conditions
1. Examine conditions and verify substrate conditions are acceptable for product installation.

3.03 PREPARATION
3.04 ERECTION
3.05 INSTALLATION
A. Examine conditions and verify substrate conditions are acceptable for product installation.

3.06 APPLICATION
3.07 CONSTRUCTION
3.08 REPAIR/RESTORATION
3.09 RE-INSTALLATION
3.10 FIELD QUALITY CONTROL
A. Site Tests, Inspection
1. Test the window for water leaks in accordance with AAMA 501.2-03. Conduct test in the presence of the IOR. Correct deficiencies observed as a result of this test.
B. Manufacturers' Field Services

3.11 ADJUSTING
3.12 CLEANING
3.13 DEMONSTRATION

3.14 PROTECTION
3.15 SCHEDULES

END OF SECTION

Section 08 71 00
Door Hardware

PART 1 - GENERAL

1.1 RELATED DOCUMENTS

A. Drawings and general provisions of the Contract, including General and Supplementary Conditions and Division 1 Specifications, apply to this section.

1.2 SUMMARY

A. Section Includes: Finish hardware except as otherwise specified or specifically omitted herein.

B. Related Sections:

1. Section 08 11 13 - Hollow Metal Doors and Frames.
2. Section 32 31 13 - Chain Link Fences and Gates.

C. Specific Omissions: Hardware for the following is specified or indicated elsewhere.

1. Windows.
2. Cabinets and locks.
3. Signs.
4. Toilet accessories.
5. Installation.
6. Rough hardware.

1.3 REFERENCES

A. Published specifications, standards, tests, or recommended methods of trade, industry, or governmental organizations apply to Work of this Section where cited by abbreviations noted below (latest editions apply unless noted otherwise).

B. ADA - Americans with Disabilities Act Standards for Accessible Design.

C. ANSI - American National Standards Institute.

D. BHMA - Builders Hardware Manufacturers Association.

E. CBC - California Building Code, (CCR) California Code of Regulations, Title 24, Part 2, California State Accessibility Standards.

F. DSA - Division of the State Architect.

G. NFPA 80 - Fire Doors and Windows.

H. UL - Underwriters Laboratories.

1.4 SUBSTITUTIONS & SUBMITTALS

A. Requests for substitutions must be made in writing 10 days prior to bid date to allow architect to issue an addendum. If proposing a substitute, submit that product data attached to one showing specified item and indicate savings to be made. Provide sample if requested. No other substitutions will be allowed.

1. Items listed with no substitute manufacturers have been requested by the Owner to match existing.

B. SUBMITTALS: Submit six copies of schedule within 4 weeks after project has been awarded. Organize schedule into "Hardware Sets" with an index of doors and heading, indicating complete designations of every item required for each door or opening. Include the following information:

1. Type, style, function, size, quantity and finish of each hardware item. Use BHMA finish codes as per ANSI A156.18.
2. Name, part number and manufacturer of each item.
3. Fastenings and other pertinent information.
4. Location of hardware set cross referenced to indications on drawings both on floor plans and in door schedule.
5. Explanation of all abbreviations, symbols, and codes contained in schedule.
6. Mounting locations for hardware.
7. Door and frame sizes and materials.

1.5 QUALITY ASSURANCE

A. Qualifications:

1. Obtain each kind of hardware (latch and lock sets, exit devices, hinges, and closers) from only one manufacture, although several may be indicated as offering products complying with requirements.
2. Hardware supplier shall be a direct factory contract supplier who has in his employment a certified hardware consultant (AHC) who is available at all reasonable times during the course of the work for project hardware consultation to the Owner, Architect, and Contractor.

B. Schedule Designations: Except as otherwise indicated, the use of one manufacturer's numeric designation system in schedules does not imply that another manufacturer's products will not be acceptable, unless they are not equal in design, size, weight, finish, function, or other quality of significance. See 1.4.A for substitutions.

1.6 REGULATORY REQUIREMENTS

A. Fire-Rated Openings: Comply with CBC Section 716 and NFPA Standard No. 80. Provide only hardware tested and listed by UL for the type and size of each door required, which complies with the requirements of the door and frame labels.

1. Where exit devices are required on fire rated doors, provide supplementary marking on door UL label indicating “Fire Door to be Equipped with Fire Exit Hardware”, and provide UL label on exit device indicating “Fire Exit Hardware”.
2. Exit device shall be compliant with State Fire Marshall Standard 12-10-3, Section 12-10-302.

B. Conform to applicable requirements of the Americans with Disabilities Act Standards for Accessible Design regarding accessibility requirements for door and entrance hardware.

C. Doors and doorways that are part of an accessible route shall comply with CBC Section 11B-404.

D. The clear opening width for a door shall be 32 inches minimum. For a swinging door it shall be measured between the face of the door and the stop, with the door open 90 degrees. The shall be no projections into the opening below 34 inches and 4 inches maximum projections into the opening between 34 inches and 80 inches above the finish floor or ground. Door closers and stops shall be permitted to be 78 inches minimum above the finish floor or ground. CBC Section 11B-404.2.3.

E. Handles, pulls, latches, locks, and other operable parts on accessible doors shall comply with CBC Section 11B-309.4 and be operable with one hand and shall not require tight grasping, pinching, or twisting of the wrist. Operable parts of such hardware shall be 34 inches minimum and 44 inches maximum above the finish floor or ground. Where sliding doors are in the fully open position, operating hardware shall be exposed and usable from both sides. CBC Section 11B-404.2.7.

F. The force for pushing or pulling open a door shall be as follows: CBC Section 11B-404.2.9.

1. Interior hinged doors, sliding or folding doors, and exterior hinged doors: 5 lbs. (22.2N) maximum.
2. Required fire doors: the minimum opening force allowable by the DSA Authority, not to exceed 15 lbs. (66.7N) maximum. These forces do not apply to the force required to retract latch bolts or disengage other devices that hold the door in a closed position.
3. The force required for activating any operable parts, such as lever hardware, or disengaging other devices shall be 5 lbs. (22.2N) maximum to comply with CBC Section 11B-309.4.

G. Door closing speeds shall be as follows: CBC Section 11B-404.2.8.

1. Closer shall be adjusted so that the required time to move a door from an open position of 90 degrees to a position of 12 degrees from the latch is 5 seconds minimum.
2. Spring hinges shall be adjusted so that the required time to move a door from an open position of 70 degrees to the closed position is 1.5 seconds minimum.

H. Thresholds shall comply with CBC Section 11B-404.2.5.

I. Floor stops shall not be located in the path of travel and 4 inches maximum from walls.

J. Hardware (including exit devices) shall not be provided with “Night Latch” (NL) function for any accessible doors or gates unless the following conditions are met: (such conditions must be clearly demonstrated and indicated in the specifications)

1. Such hardware has a ‘dogging’ feature.
2. It is dogged during the time the facility is open.
3. Such ‘dogging’ operation is performed only by employees as their job function (non-public use).

K. Pair of doors: Limit swing of one leaf to 90 degrees so that a clear floor space is provided beyond the arc of the swing for the wall-mounted tactile sign. CBC Section 11B-703.4.2.

1.7 DELIVERY, STORAGE, AND HANDLING

A. Acceptance at Site: Individually package each unit of finish hardware complete with proper fastening and appurtenances, clearly marked on the outside to indicate contents and specific locations in the Work.

B. Deliver packaged hardware items at the times and to the locations (shop or field) for installation, as directed by the Contractor.

1.8 PROJECT CONDITIONS

A. Coordination: Coordinate hardware with other work. Furnish hardware items of proper design for use on doors and frames of the thickness, profile, swing, security and similar requirements indicated, as necessary for proper installation and function, regardless of omissions or conflicts in the information on the Contract Documents.

B. Upon request, check the Shop Drawings for doors and entrances to confirm that adequate provisions will be made for the proper installation of hardware.

1.9 WARRANTY

A. Provide guarantee from hardware supplier as follows:

1. Closers: Five years, except electronic closers, two years.
2. Exit Devices: Two years.
3. All other Hardware: Two years.

PART 2 - MATERIALS

2.1 MANUFACTURERS

A. Approval of manufacturers other than those listed below shall be in accordance with paragraph 1.4.A.

Item:	Manufacturer:	Acceptable Substitute:
Continuous Hinges	Ives	McKinney, Hager
Butt Hinges	Ives	McKinney, Hager
Locksets	Schlage	Owners standard
Cylinders	Schlage	Owners standard
Exit Devices	Von Duprin	Owners standard
Surface Closers	Norton	Owners standard
Cylinder Guards	Keedex	Or equal
Anti Vandal Pulls	Ives	Rockwood, Trimco
Auto Flush Bolts	Trimco	Rockwood, Ives
Kick Plates	Trimco	Rockwood, Ives
Door Stops	Trimco	Rockwood, Ives
Gate Boxes	Keedex	Or equal

Gate Closers	Locinox	Or equal
Overhead Stops	Glynn Johnson	Rixson, ABH
Thresholds/Sweeps/Seals	Pemko	Reese, NGP

B. Furnish items of hardware required to complete the work in accordance with these specifications and the manufacturers' instructions. Items of hardware not specified shall be provided even though inadvertently omitted from this specification. Items shall be of equal quality and type.

C. Where the exact types of hardware specified are not adaptable to the finished shape or size of the members requiring hardware, furnish suitable types having as nearly as practicable the same operation and quality as the type specified, subject to Architect's approval.

D. Carefully inspect Project for the extent of the finish hardware required to complete the Work. Where there is a conflict between these specifications and the existing hardware, furnish finish hardware to specification.

2.2 MATERIALS

A. Locksets: Locksets to be provided with ANSI standard curved lip strikes with wrought strike boxes. Strikes shall have lips of sufficient length to clear trim and protect clothing.

1. Comply with requirements of local security ordinances.
2. Lock Series and Design: Schlage L series 03A lever.

B. Butt Hinges: Outswinging exterior doors shall have nonremovable (NRP) pin. Hinge open widths shall be minimum, but of sufficient size to permit door to swing 180 degrees.

1. Furnish 3 hinges per leaf to 7 foot, 6 inch height. Add one for each additional 30 inches in height or fraction thereof.
2. Provide 5 inch heavy weight hinges on doors over 3 feet, 5 inches width.

C. Continuous Hinges: Hinge open widths shall be minimum, but of sufficient size to permit door to swing 180 degrees. Where necessary to maintain door clearance at jamb trim, frame conditions, door reveals and similar conditions, furnish wide throw hinges as approved by the Architect. Where door is indicated as having fire resistance rating, provide UL listed and labeled hardware.

D. Exit Devices: Furnish devices with sex bolts unless otherwise specified. Lever handle trim shall match locksets.

1. Provide glass bead kits of proper thickness where the rail assembly of the exit device crosses a lite.

E. Surface Door Closers: Full rack and pinion type with removable non-ferrous case. Furnish closers with sex bolts unless otherwise specified. Place closers inside building, stairs, and rooms. Closers shall be non-handed, non-sized, and installed to permit door to swing 180 degrees.

1. Flush transom offset brackets shall be used where parallel arm closers are listed for doors with fixed panels over.
2. Provide drop brackets, shoe supports, and blade stop spacers as required at

narrow top rails

F. Protection Plates: Provide kick, armor, or mop plates with four beveled edges, .050 inches minimum thickness, height called for in schedule by width less 2-inches. Furnish with machine or wood screws of bronze or stainless steel to match other hardware.

G. Floor Stops: Floor mounted door stops are prohibited where located in the path of travel. Where provided, install maximum 4 inches from wall surface.

H. Seals: Seals shall be finished to match adjacent frame color. UL label shall be applied on all rated doors.

I. Screws: Exposed screws shall be Phillips head. Do not use self-drilling, self-tapping screws, unless furnished by hardware manufacturer for the specific condition or for mounting flat-goods such as push plates and kick plates.

J. Silencers: Furnish silencers for interior hollow metal frames, 3 for single doors and 2 for pairs of doors. Omit where sound seals occur or for fire-rated door assemblies.

K. Thresholds: Change in level between 1/4 inch and 1/2 inch shall be beveled with a slope no greater than 1 unit vertical to 2 units horizontal (50 percent slope). The floor or landing shall not be more than 1/2 inch lower than the threshold of the doorway.

2.3 FINISH

A. Generally to be BHMA 626 Satin Chromium.

1. Areas using BHMA 626 shall have push, pulls and kick plates of BHMA 630, Satin Stainless Steel, unless otherwise noted.

B. Factory paint door closers to match other hardware, unless otherwise noted.

C. Aluminum items shall be finished to match predominant adjacent material. Seals to coordinate with frame color.

2.4 KEYING REQUIREMENTS

A. Contact the District Locksmith with Kern High School District for keying requirements. Keying system shall be coordinated with the Owner and approved by Owner's representative in writing. Furnish construction key system in accordance with lock manufacturers' standard. Where interchangeable core systems are used, provide temporary cores for construction keying.

1. Key system shall be Schlage Primus, 'E' keyway, FSIC cylinders, 6-pin. Primus cylinders to be provided at exterior doors, standard cylinders at interior doors.

B. For protection of the Owner, key cylinders at the factory of the cylinder manufacturer where permanent records are maintained. Permanently inscribe each key with number that identifies cylinder manufacturer key symbol, and notation "DO NOT DUPLICATE".

C. Deliver permanent keys and cylinder cores directly to Owner by registered security shipment direct from hardware manufacturer. Hardware supplier shall not cut keys.

D. Keying Schedule: Submit three copies of separate detailed schedule indicating clearly how the Owner's final instructions on keying of locks have been fulfilled.

PART 3 - EXECUTION

3.1 HARDWARE LOCATIONS:

A. Lockset: 34 to 44 inches above finished floor. Verify manufacturers' template with door design.

B. Exit Device: 36 to 44 inches above finished floor. Verify manufacturers' template with door design.

C. Floor Stop: Installed at a maximum of 4 inches from the face of the wall or partition.

D. Conform to CCR, Title 24, Part 2, and ADA for positioning requirements for accessibility.

3.2 INSTALLATION

A. Pre-Installation Meetings: Initiate and conduct with supplier, installer, and related trades, coordinate materials and techniques, and sequence complex hardware items and systems installation. Include manufacturers' representatives of locks, panic hardware, and door closers in the meetings.

B. Install each hardware item per manufacturer's instructions and recommendations. Do not install surface mounted items until finishes have been completed on the substrate. Set units level, plumb and true to line and location. Adjust and reinforce the attachment substrate as necessary for proper installation and operation.

C. Set exterior door thresholds with full-width bead of elastomeric sealant on each point of contact with floor, providing a continuous weather seal. Anchor thresholds with stainless steel countersunk screws.

3.3 ADJUSTING

A. Adjust and check each operating item of hardware and each door, to ensure proper operation or function of every unit. Replace units which cannot be adjusted to operate freely and smoothly.

B. Inspection: Hardware supplier shall inspect hardware furnished within 10 days of contractors request and include with his guarantee a statement that this has been accomplished. Inspector or Contractor will sign off the hardware as being complete and correctly installed and adjusted. Further corrections of defective material shall be the responsibility of his representative.

3.4 SCHEDULE OF DOOR HARDWARE

A. Legend of listed manufacturers:

GLY Glynn Johnson
IVE Ives
KEE Keedex

LOC	Locinox
NOR	Norton
PEM	Pemko
SCH	Schlage
TRM	Trimco
VON	Von Duprin

B. The last column in the Hardware Schedule refers to the manufacturer listed above.

C. The Door Schedule on the Drawings indicates which Hardware Set is used with each door.

D. Schedule of Door Hardware:

HW-1
Each single door to have

3	HINGE	5BB1HW - 4.5 x 4.5 x NRP	630	IVE
1	LOCKSET	L9076T x LLL x 03A x L283-150	626	SCH
1	PERMANENT CORE	20-740	626	SCH
1	CYLINDER GUARD	K-24	626	KEE
1	ANTI VANDAL PULL	VR900	630	IVE
1	SURFACE CLOSER	CPS7500-T	689	NOR
1	KICK PLATE	K0050 - 10 x 2 LDW x B4E	630	TRM
1 SET	DOOR SEALS	2893V HEAD & JAMBS	628	PEM
1	DOOR SWEEP	18062NB	628	PEM
1	THRESHOLD	PER SILL DETAIL	628	PEM

Note: Install door seals before closer

HW-2
Each single door to have

3	HINGE	5BB1HW - 4.5 x 4.5 x NRP	630	IVE
1	LOCKSET	L9076T x LLL x 03A x L283-150	626	SCH
1	PERMANENT CORE	20-740	626	SCH
1	CYLINDER GUARD	K-24	626	KEE
1	ANTI VANDAL PULL	VR900	630	IVE
1	SURFACE CLOSER	PR7500	689	NOR
1	KICK PLATE	K0050 - 10 x 2 LDW x B4E	630	TRM
1	FLOOR STOP	1209	626	TRM
3	SILENCERS	1229A	GRY	TRM
1	DOOR SWEEP	18062NB	628	PEM
1	THRESHOLD	PER SILL DETAIL	628	PEM

HW-3
Each single door to have

3	HINGE	5BB1HW - 4.5 x 4.5	652	IVE
1	LOCKSET	L9071T x 03A	626	SCH
2	PERMANENT CORE	23-030	626	SCH

1	SURFACE CLOSER	PR7500-H	689	NOR
1	KICK PLATE	K0050 - 10 x 2 LDW x B4E	630	TRM
1	KICK PLATE	K0050 - 10 x 1 LDW x B4E	630	TRM
1	WALL BUMPER	1270CVPV	626	TRM
3	SILENCERS	1229A	GRY	TRM

HW-4
Each single door to have

3	HINGE	5BB1HW - 5.0 x 4.5	652	IVE
1	LOCKSET	L9070T x 03A	626	SCH
1	PERMANENT CORE	23-030	626	SCH
1	SURFACE CLOSER	PR7500-H	689	NOR
1	KICK PLATE	K0050 - 10 x 2 LDW x B4E	630	TRM
1	FLOOR STOP	1214	626	TRM
3	SILENCERS	1229A	GRY	TRM

HW-5
Each single door to have

3	HINGE	5BB1HW - 5.0 x 4.5 x NRP	630	IVE
1	LOCKSET	L9077T x LLL x 03A x L283-150	626	SCH
2	PERMANENT CORE	20-740	626	SCH
1	CYLINDER GUARD	K-24	626	KEE
1	ANTI VANDAL PULL	VR900	630	IVE
1	SURFACE CLOSER	CPS7500	689	NOR
1	KICK PLATE	K0050 - 10 x 2 LDW x B4E	630	TRM
1 SET	DOOR SEALS	2893V HEAD & JAMBS	628	PEM
1	DOOR SWEEP	18062NB	628	PEM
1	THRESHOLD	PER SILL DETAIL	628	PEM

Note: Install door seals before closer

HW-6
NOT USED

HW-7
Each single door to have

3	HINGE	5BB1HW - 4.5 x 4.5 x NRP	630	IVE
1	LOCKSET	CO-200-CY-40-PRK-TLR-JD	626	SCH
1	CONSTRUCTION CORE	23-030-ICX	606	SCH
1	PERMANENT CORE	20-740	626	SCH
1	LOCK ASTRAGAL	5000-T	626	TRM
1	SURFACE CLOSER	CPS7500	689	NOR
1	KICK PLATE	K0050 - 10 x 2 LDW x B4E	630	TRM
1 SET	DOOR SEALS	2893V HEAD & JAMBS	628	PEM
1	DOOR SWEEP	18062NB	628	PEM
1	THRESHOLD	PER SILL DETAIL	628	PEM

Note: Install door seals before closer

HW-8
Each single door to have

3	HINGE	5BB1HW - 4.5 x 4.5 x NRP	630	IVE
1	LOCKSET	L9077T x LLL x 03A x L283-150	626	SCH
2	PERMANENT CORE	20-740	626	SCH
1	ELECTRIC STRIKE	6400	630	VON
1	CYLINDER GUARD	K-24	626	KEE
1	ANTI VANDAL PULL	VR900	630	IVE
1	SURFACE CLOSER	PR7500	689	NOR
1	KICK PLATE	K0050 - 10 x 2 LDW x B4E	630	TRM
1	FLOOR STOP	1209	626	TRM
1 SET	DOOR SEALS	2893V HEAD & JAMBS	628	PEM
1	DOOR SWEEP	18062NB	628	PEM
1	THRESHOLD	PER SILL DETAIL	628	PEM

Note: Install door seals before closer
Note: Access control system, door contacts, and wiring by Division 28

HW-9
Each single door to have

3	HINGE	5BB1HW - 4.5 x 4.5	652	IVE
1	LOCKSET	L9080T x 03A	626	SCH
1	PERMANENT CORE	23-030	626	SCH
1	KICK PLATE	K0050 - 10 x 2 LDW x B4E	630	TRM
1	FLOOR STOP	1214	626	TRM
3	SILENCERS	1229A	GRY	TRM

HW-10
Each single door to have

3	HINGE	5BB1HW - 4.5 x 4.5 x NRP	630	IVE
1	LOCKSET	L9080T x LLL x 03A x L283-150	626	SCH
1	PERMANENT CORE	20-740	626	SCH
1	CYLINDER GUARD	K-24	626	KEE
1	ANTI VANDAL PULL	VR900	630	IVE
1	SURFACE CLOSER	PR7500	689	NOR
1	KICK PLATE	K0050 - 10 x 2 LDW x B4E	630	TRM
1	FLOOR STOP	1209	626	TRM
1 SET	DOOR SEALS	2893V HEAD & JAMBS	628	PEM
1	DOOR SWEEP	18062NB	628	PEM
1	THRESHOLD	PER SILL DETAIL	628	PEM

Note: Install door seals before closer

HW-11
Each single door to have

3	HINGE	5BB1HW - 4.5 x 4.5	630	IVE

1	LOCKSET	CO-200-CY-40-PRK-TLR-JD	626	SCH
1	CONSTRUCTION CORE	23-030-ICX	606	SCH
1	PERMANENT CORE	20-740	626	SCH
1	SURFACE CLOSER	7500	689	NOR
1	MOP PLATE	KM050 - 6 x 1 LDW x B4E	630	TRM
1	WALL BUMPER	1270CVPV	626	TRM
1 SET	DOOR SEALS	2893V HEAD & JAMBS	628	PEM
1	DOOR SWEEP	18062NB	628	PEM
1	THRESHOLD	PER SILL DETAIL	628	PEM

HW-12
Each single door to have

3	HINGE	5BB1HW - 4.5 x 4.5	630	IVE
1	LOCKSET	L9077T x LLL x 03A x L283-150	626	SCH
2	PERMANENT CORE	20-740	626	SCH
1	CYLINDER GUARD	K-24	626	KEE
1	ANTI VANDAL PULL	VR900LLP	630	IVE
1	SURFACE CLOSER	7500 x SPEC TEMPLATE	689	NOR
1	OVERHEAD STOP	100S	630	GLY
1 SET	DOOR SEALS	2893V HEAD & JAMBS	628	PEM
1	DOOR SWEEP	18062NB	628	PEM
1	THRESHOLD	PER SILL DETAIL	628	PEM

HW-13
Each pair door to have

2	CONTINUOUS HINGE	700	630	IVE
1 SET	AUTO FLUSH BOLT	3820 x 3810	630	TRM
1	DUST PROOF STRIKE	3910	630	TRM
1	LOCKSET	L9080T x LLL x 03A x L283-150	626	SCH
1	PERMANENT CORE	20-740	626	SCH
1	CYLINDER GUARD	K-24	626	KEE
1	ANTI VANDAL PULL	VR900LLP	630	IVE
1	SURFACE CLOSER	CPS7500-T x SRI	689	NOR
2	KICK PLATE	K0050 - 10 x 1 LDW x B4E	630	TRM
1	OVERHEAD STOP	900H	630	GLY
1	ASTRAGAL	BY DOOR MFR	---	---
1 SET	DOOR SEALS	2893V HEAD & JAMBS	628	PEM
2	DOOR SWEEP	18062NB	628	PEM
1	THRESHOLD	PER SILL DETAIL	628	PEM

Note: Install door seals before closer and overhead stop

HW-14
Each pair door to have

1	CONTINUOUS HINGE	700 x EPT PREP	630	IVE
1	CONTINUOUS HINGE	700	630	IVE
1	POWER TRANSFER	EPT-10 (INACTIVE LEAF)	689	VON
1 SET	AUTO FLUSH BOLT	3820 x 3810	630	TRM

1	DUST PROOF STRIKE	3910	630	TRM
1	LOCKSET	L9080T x LLL x 03A x L283-150	626	SCH
1	PERMANENT CORE	20-740	626	SCH
1	ELECTRIC STRIKE	6223	630	VON
1	CYLINDER GUARD	K-24	626	KEE
1	ANTI VANDAL PULL	VR900LLP	630	IVE
1	SURFACE CLOSER	CPS7500-T x SRI	689	NOR
2	KICK PLATE	K0050 - 10 x 1 LDW x B4E	630	TRM
1	OVERHEAD STOP	900H	630	GLY
1	ASTRAGAL	BY DOOR MFR	---	---
1 SET	DOOR SEALS	2893V HEAD & JAMBS	628	PEM
2	DOOR SWEEP	18062NB	628	PEM
1	THRESHOLD	PER SILL DETAIL	628	PEM

Note: Install door seals before closer and overhead stop
Note: Access control system, door contacts, and wiring by Division 28

HW-SG1
Each pair gate to have

8	GATE HINGE	PER GATE DETAIL	---	---
2	PADLOCK	KS43F3200	606	SCH
2	PERMANENT CORE	20-740	606	SCH
2	CANE BOLT	PER GATE DETAIL	---	---

Note: Balance of material by Tube Steel Gate Manufacturer

HW-SG2
Each single gate to have

1	GATE HINGE/CLOSER	MAMMOTH-HD-9005	BLK	LOC
1	EXIT DEVICE	AX-PA-CDSI-98NL x 990NL x WH	626	VON
1	MORTISE CYLINDER	20-061-ICX	626	SCH
1	RIM CYLINDER	20-057-ICX	626	SCH
2	PERMANENT CORE	20-740	626	SCH
1	ELECTRIC STRIKE	6300	630	VON
1	CYLINDER GUARD	K-24	626	KEE
1	GATE BOX	K-BXED-V990NL-2	600	KEE

Note: Balance of material by Tube Steel Gate Manufacturer
Note: Access control system, door contacts, and wiring by Division 28

HW-SG3
Each pair gate to have

2	GATE HINGE/CLOSER	MAMMOTH-HD-9005	BLK	LOC
1	EXIT DEVICE	AX-PA-CDSI-98NL x 990NL x WH	626	VON
1	EXIT DEVICE	AX-PA-CDSI-98DT x 990DT x WH	626	VON
2	MORTISE CYLINDER	20-061-ICX	626	SCH
1	RIM CYLINDER	20-057-ICX	626	SCH
3	PERMANENT CORE	20-740	626	SCH
1	ELECTRIC STRIKE	6300 (ACTIVE LEAF)	630	VON
1	CYLINDER GUARD	K-24	626	KEE

2	GATE BOX	K-BXED-V990NL-2	600	KEE
1	WALL BUMPER	1209W (AT BUILDING LEAF)	626	TRM

Note: Balance of material by Tube Steel Gate Manufacturer
Note: Access control system, door contacts, and wiring by Division 28

HW-SG4
Each sliding gate to have

1	PADLOCK	KS43F3200	606	SCH
1	PERMANENT CORE	20-740	606	SCH

Note: Balance of material by Aluminum Sliding Gate Manufacturer

HW-SG5
Each pair gate to have

4	GATE HINGE	PER GATE DETAIL	---	---
1	LOCKSET	LV9080T x 03A	626	SCH
1	PERMANENT CORE	20-740	626	SCH
1	GATE BOX	K-BXMOR1	600	KEE
1	PADLOCK	KS43F3200 (AT CANE BOLT)	606	SCH
1	PERMANENT CORE	20-740 (AT CANE BOLT)	606	SCH
1	CANE BOLT	PER GATE DETAIL	---	---

Note: Balance of material by Tube Steel Gate Manufacturer

HW-SG6
Each pair gate to have

2	GATE HINGE/CLOSER	MAMMOTH-HD-9005	BLK	LOC
1	EXIT DEVICE	AX-PA-CDSI-98NL x 990NL x WH	626	VON
1	EXIT DEVICE	AX-PA-CDSI-98DT x 990DT x WH	626	VON
2	MORTISE CYLINDER	20-061-ICX	626	SCH
1	RIM CYLINDER	20-057-ICX	626	SCH
3	PERMANENT CORE	20-740	626	SCH
1	CYLINDER GUARD	K-24	626	KEE
2	GATE BOX	K-BXED-V990NL-2	600	KEE
1	WALL BUMPER	1209W (AT BUILDING LEAF)	626	TRM

Note: Balance of material by Tube Steel Gate Manufacturer

HW-SG7
Each pair gate to have

3	PADLOCK	KS43F3200	606	SCH
3	PERMANENT CORE	20-740	606	SCH

Note: Balance of material by Chain Link Gate Manufacturer

HW-SG8
Each single gate to have

1	PADLOCK	KS43F3200	606	SCH
1	PERMANENT CORE	20-740	606	SCH

Note: Balance of material by Chain Link Gate Manufacturer

END OF SECTION

SECTION 08 80 00
GLAZING

PART 1 GENERAL

1.01 SUMMARY
- A. Section Includes
  1. Insulating Glass Unit (IGU)
  2. Monolithic Glass
- B. Products Supplied But Not Installed Under This Section
- C. Products Installed But Not Supplied Under This Section
- D. Related Sections
  1. 07 92 00 Joint Sealants
  2. 08 11 13 Hollow Metal Doors and Frames
  3. 08 16 13 Fiberglass Doors and Frames
  4. 08 51 13 Aluminum Windows
- E. Allowances
- F. Unit Prices
- G. Measurement Procedures
- H. Payment Procedures
- I. Alternates

1.02 REFERENCES
- A. ANSI Z97.1 – American National Standard for Glazing Materials Used in Buildings – Safety Performance Specifications and Methods of Test
- B. ASCE 7 – Minimum Design Loads for Buildings and Other Structures
- C. ASTM C 162 – Standard Terminology of Glass and Glass Products
- D. ASTM C 1036 – Standard Specification for Flat Glass
- E. ASTM C 1048 – Standard Specification for Heat-Treated Flat Glass — Kind HS, Kind FT Coated and Uncoated Glass
- F. ASTM C 1172 – Standard Specification for Laminated Architectural Flat Glass
- G. ASTM C 1376 – Standard Specification for Pyrolitic and Vacuum Deposition Coatings on Flat Glass
- H. ASTM E 2188 – Standard Test Method for Insulating Glass Unit Performance
- I. ASTM E 2189 – Standard Test Method for Testing Resistance to Fogging in Insulating Glass Units
- J. ASTM E 2190 – Standard Specification for Insulating Glass Unit Performance and Evaluation

1.03 DEFINITIONS
- A. Manufacturers of Glass Products: Firms that produce primary glass, fabricated glass, or both, as defined in referenced glazing publications
- B. Glass Thicknesses: Indicated by thickness designations in millimeters according to ASTM C 1036
- C. Interspace: Space between lites of an insulating-glass unit that contains dehydrated air or other specified gas
- D. Sealed Insulating Glass Unit Surface Designations:
  1. Surface 1 – Exterior surface of the outer glass lite
  2. Surface 2 – Interspace surface of the outer glass lite
  3. Surface 3 – Interspace surface of the inner glass lite
  4. Surface 4 – Interior surface of the inner glass lite

1.04 SYSTEM DESCRIPTIONS

A. Design Requirements, Performance Requirements

1. Provide glass capable of withstanding thermal movement and wind and impact loads (where applicable) as specified.
2. Glass Design: Glass thickness designations indicated are minimums and are for detailing only. Confirm glass thicknesses by analyzing Project loads and in-service conditions. Provide glass lites in the thickness designations indicated for various size openings, but not less than thicknesses and in strengths (annealed or heat-treated) required to meet or exceed the following criteria:
    a. Glass Thicknesses: Select minimum glass thicknesses to comply with ASTM E 1300.
    f. Thermal Movements: Provide glazing that allows for thermal movements resulting from ambient and surface temperatures changes acting on glass framing members and glazing components.
    g. Thermal and Optical Performance Properties: Provide glass with performance properties specified based on manufacturer's published test data, as determined according to procedures indicated below:
        1. For monolithic-glass lites, properties are based on units with lites 1/4 inch (6.0 mm) thick.
        2. For insulating-glass units, properties are based on units of thickness indicated for overall unit and for each lite.
        3. Center-of-Glass Values: Based on using LBNL WINDOW 6.3 computer program for the following methodologies:
            a. U-Factors: NFRC 100 expressed as Btu/sq. ft. per h per degree F
            b. Solar Heat Gain Coefficient: NFRC 200
            c. Solar Optical Properties: NFRC 300

1.05 SUBMITTALS

A. Product Data

1. Submit for each glass product and glazing material indicated

B. Shop Drawings

1. Glazing Schedule: Use same designations indicated on Drawings for glazed openings in preparing a schedule listing glass types and thicknesses for each size opening and location.

C. Samples

1. Submit for all specified products:
    a. Min. 12-inch square samples for insulating glass units
    b. Manufacturer's standard sample size for monolithic glass lites

D. Quality Assurance/Control Submittals

1. Design Data, Test Reports, Certificates, Manufacturers' Instructions, Manufacturers' Field Reports, Qualification Statements

a. Product Certificates: Signed by manufacturers of glass and glazing products certifying that products furnished comply with requirements.
   1. For solar-control low-e-coated glass, provide documentation demonstrating that fabricator of coated glass is certified by coating manufacturer.
b. Qualification Data for installers
c. Product Test Reports: For each of the following types of glazing products: Tinted float glass Coated float glass Insulating glass

1.06 QUALITY ASSURANCE

A. Qualifications
   1. Fabricator Qualifications: Certified Fabricator as acceptable to the manufacturer
   2. Installer Qualifications: An experienced installer who has completed glazing similar in material, design and extent to that indicated for this Project; whose work has resulted in glass installations with a record of successful in-service performance; and who employs glass installers for this Project who are certified under the National Glass Association Glazier Certification Program as Level-2 (Senior Glaziers) or Level-3 (Master Glaziers).
   3. Source Limitations for Glass: Obtain the following through one source from a single manufacturer for each glass type: clear float glass, coated float glass and insulating glass.

B. Regulatory Requirements
   1. Comply with requirements from CBC Chapter 24.

C. Certifications
   1. Glass Product Testing: Obtain glass test results for product test reports in Submittals Article from a qualified independent testing agency accredited according to the NFRC CAP 1 Certification Agency Program.
   2. Glazing Publications: Comply with published recommendations of glass product manufacturers and industry organizations, including but not limited to those below, unless more stringent requirements are indicated. Refer to these publications for glazing terms not otherwise defined in this Section or in referenced standards.
      a. IGMA Publication for Insulating Glass: IGMA TM-3000, Glazing Guidelines for Sealed Insulating Glass Units
      b. GANA Publications: Laminated Glazing Reference Manual; Glazing Manual
      c. AAMA: Sloped Glazing Guidelines
      d. IGMA: Guidelines for Sloped Glazing
   3. Insulating-Glass Certification Program: Permanently marked either on spacers or on at least one component lite of units with appropriate certification label of the following testing and inspecting agency:
      a. Insulating Glass Certification Council Associated Laboratories, Inc. Insulating Glass Manufacturers Alliance
   4. Safety Glazing Products: Comply with testing requirements in 16 CFR 1201 and, Insulating Glass Manufacturers Alliance ANSI Z97.1.
      a. Subject to compliance with requirements, obtain safety glazing products permanently marked with certification

label of the Safety Glazing Certification Council or another certification agency acceptable to authorities having jurisdiction.

b. All lites are required to be Category II materials

D. Field Samples

E. Mock-ups

F. Pre-installation Meetings

1.07 DELIVERY, STORAGE, AND HANDLING

A. Packing, Shipping, Handling, and Unloading

B. Acceptance at Site

C. Storage and Protection

1. Protect glazing materials according to manufacturer's written instructions and as needed to prevent damage to glass and glazing materials from condensation, temperature changes, direct exposure to sun, or other causes.

2. For insulating glass units that will be exposed to substantial altitude changes, comply with insulating glass manufacturer's written recommendations for venting and sealing to avoid hermetic seal ruptures.

D. Waste Management and Disposal

1.08 PROJECT CONDITIONS

1.09 SEQUENCING

1.10 SCHEDULING

1.11 WARRANTY

A. Coated-Glass Products: Manufacturer's standard form, made out to the glass fabricator, in which the coated glass manufacturer agrees to replace coated glass units that deteriorate during normal use within the specified warranty period. Deterioration of the coated glass is defined as peeling and/or cracking, or discoloration that is not attributed to glass breakage, seal failure, improper installation or cleaning and maintenance that is contrary to the manufacturer's written instructions.

B. Insulating Glass: Manufacturer's standard form in which the insulating glass unit manufacturer agrees to replace insulating glass units that deteriorate during normal use within the specified warranty period. Deterioration of insulating glass units is defined as an obstruction of vision by dust, moisture or a film on the interior surfaces of the glass caused by a failure of the hermetic seal that is not attributed to glass breakage, improper installation or cleaning and maintenance that is contrary to the manufacturer's written instructions.

C. Laminated Glass: Manufacturer's standard form in which the laminated glass manufacturer agrees to replace laminated glass units that deteriorate during normal use within the specified warranty period. Deterioration of laminated glass is defined as defects, such as discoloration, edge separation or blemishes exceeding those allowed by ASTM C 1172 that are not attributed to glass breakage, improper installation or cleaning and maintenance that is contrary to the manufacturer's written instructions.

1.12 SYSTEM STARTUP

1.13 OWNER'S INSTRUCTIONS
1.14 COMMISSIONING
1.15 MAINTENANCE

PART 2 PRODUCTS

2.01 MANUFACTURERS
- A. Float Glass
  1. Vitro Architectural Glass (Formerly PPG Glass, Inc.), 400 Guys Run Rd., Cheswick, PA 15024, or Equal.
  2. Pilkington North America, Inc., 811 Madison Ave, Toledo, OH 43604
  3. Oldcastle Building Envelope, 2425 Olympic Boulevard, Suite 525-East, Santa Monica, CA 90404
  4. Guardian Glass, 2300 Harmon Rd., Auburn Hills, MI 48326

2.02 EXISTING PRODUCTS
2.03 MATERIALS
2.04 MANUFACTURED UNITS
- A. Type A
  (Vitro) Insulating Glass Unit
  1. Type: SOLARBAN 70XL (2) SOLARGRAY + Clear
  2. Thickness: 1-inch insulating glass unit
     a. Outer Lite: 1/4-inch
     b. Airspace: 1/2-inch
     c. Inner Lite: 1/4-inch
  3. Tint: SOLARGRAY
  4. Heat Treatment: Tempered, Herculite brand
  5. Surface Designations:
     a. Surface 1: -
     b. Surface 2: Low E
     c. Surface 3: -
     d. Surface 4: -

- B. Type B
  (Vitro) Insulating Glass Unit - Opaque
  1. Type: SOLARBAN 70XL (2) SOLARGRAY+ Clear with acid-etched texture
  2. Thickness: 1-inch insulating glass unit
     a. Outer Lite: 1/4-inch
     b. Airspace: 1/2-inch
     c. Inner Lite: 1/4-inch
  3. Tint: Clear
  4. Heat Treatment: Tempered, Herculite brand
  5. Surface Designations:
     a. Surface 1: -
     b. Surface 2: Low E
     c. Surface 3: Acid-Etch, Level 3 - Velour Texture
     d. Surface 4: -

- C. Type C
  (Vitro) Monolithic Clear Class
  1. Type: Monolithic Clear
  2. Thickness: 1/2-inch Glass

3. Tint: Clear
4. Heat Treatment: Tempered, Herculite brand
5. Surface Designations
   a. Surface 1: -
   b. Surface 2: -

2.05 EQUIPMENT
2.06 COMPONENTS
2.07 ACCESSORIES
2.08 MIXES
2.09 FABRICATION
A. Shop Assembly
1. Fabricate glazing units in sizes required to glaze openings indicated for Project, with edge and face clearances, edge and surface conditions, and bite complying with written instructions of product manufacturer and referenced glazing publications, to comply with system performance requirements.

2.10 FINISHES
2.11 SOURCE QUALITY CONTROL

PART 3 EXECUTION

3.01 INSTALLERS
3.02 EXAMINATION
A. Site Verification of Conditions
1. Before the shop or field pre-glazing of the curtain wall units, openings will be checked to see that they are square, plumb and in true plane. If found otherwise, glazing shall not proceed until proper corrections are made.
2. Perimeter clearance must be sufficient to avoid point loading and provide for jamb and seismic blocking.

3.03 PREPARATION
A. Protection
B. Surface Preparation
1. Remove lacquer and other coatings from glazing rebates. Thoroughly clean areas to receive glass and glazing materials. The installation shall be in strict accordance with recommendations of window, glass and sealant manufacturers. Glass shall be installed so that no metal-to-glass contact occurs.

3.04 ERECTION
3.05 INSTALLATION
A. Installation shall be in accordance with applicable requirements of the latest edition of the "Glazing Manual" of the Flat Glass Marketing Association. Where vinyl or neoprene glazing beads or channels are used, they shall be in one piece for each edge of glass, with corners neatly mitered and tightly fitted together.
B. Glass in exterior frames unless otherwise specified shall be "wet-set" with appropriate sealant to ensure a weather tight installation. Channels shall be installed so that no metal-to-glass contact occurs. Corners shall be

neatly mitered to hairline joint. Channels shall be installed so that top of channel is flush with top of glazing stops and forms a neat, straight line.

3.06 APPLICATION
3.07 CONSTRUCTION
3.08 REPAIR/RESTORATION
3.09 RE-INSTALLATION
3.10 FIELD QUALITY CONTROL
- A. Site Tests, Inspection
  1. Upon completion of installation of glass and glazing, perform water tests in accordance with industry standards for such tests, and ASTM E331, AAMA FC-1-76, and NAAMM. Repair leaks and retest. Continue with tests and repairs or replacements until such time as entire installation has been tested and certifiably exhibits no water intrusion, thereby instituting five-year guarantee against such water intrusion.
- B. Manufacturers' Field Services

3.11 ADJUSTING
3.12 CLEANING
- A. Immediately prior to scheduled acceptance of work, remove protective materials and clean all glass members, being careful not to use abrasives or harmful cleaning agents.

3.13 DEMONSTRATION
3.14 PROTECTION
1. Maintain glass is a reasonably clean condition during construction so that it will not be damaged by corrosive action and will not contribute (by wash-off) to the deterioration of glazing materials and other surfaces.

3.15 SCHEDULES

END OF SECTION

SECTION 09 24 00
PORTLAND CEMENT PLASTER

PART 1 GENERAL

1.01 SUMMARY

A. Section Includes
   1. Two-coat Portland Cement Plaster Assembly
   1. Three-coat Portland Cement Plaster Assembly
   2. Metal Lath

B. Products Supplied But Not Installed Under This Section

C. Products Installed But Not Supplied Under This Section

D. Related Sections
   1. 06 10 00 Rough Carpentry
   2. 07 25 00 Water-Resistive Barriers
   3. 07 62 00 Sheet Metal Flashing and Trim
   4. 07 65 26 Self-Adhering Sheet Flashing
   5. 07 92 00 Joint Sealants
   6. 09 91 13 Exterior Painting

E. Allowances

F. Unit Prices

G. Measurement Procedures

H. Payment Procedures

I. Alternates

1.02 REFERENCES

A. ASTM C150 Portland Cement

B. ASTM C144 Standard Specification for Aggregate for Masonry Mortar

C. ASTM C847 Standard Specification for Metal Lath

D. ASTM C897 Standard Specification for Aggregate for Job-Mixed Portland Cement-Based Plaster

E. ASTM C926 Standard Specification for Application of Portland Cement-Based Plaster

F. ASTM C932 Standard Specification for Surface-Applied Bonding Compounds for Exterior Plastering

G. ASTM C933 Standard Specification for Welded Wire Lath

H. ASTM C1063 Standard Specification for Installation of Lathing and Furring for Portland Cement Based Plaster

I. ASTM E84 Test Method for Surface Burning Characteristics of Building Materials

J. ASTM E119 Method for Fire Tests of Building Construction and Materials

K. Technical Service Information Bureau - Plaster Textures

L. PCA (Portland Cement Association) – Plaster (Stucco) Manual

M. NW Wall & Ceiling Bureau Stucco Resource Guide

1.03 DEFINITIONS

1.04 SYSTEM DESCRIPTIONS

A. Design Requirements, Performance Requirements

1. System Assembly

1. Two-Coat Portland Cement Plaster Assembly -Walls (Direct to CMU)
   a. Cementitious Substrate
   b. Bonding Agent
   c. Scratch and brown coat
   d. Reinforcing and leveling coat with reinforcing mesh
   e. Finish coat.
2. Three-Coat Portland Cement Plaster Assembly - Walls (Sheathed Construction)
   a. Sheathing
   b. Water-Resistive Barrier (Two-Layers)
   c. Self-furred metal lath, must have current ICC-ES Evaluation Report
   d. Scratch and brown coat
   e. Reinforcing and leveling coat with reinforcing mesh
   f. Finish coat.
3. Three-Coat Portland Cement Plaster Assembly – Ceilings/Soffits (Open Stud)
   a. Self-furred metal lath, must have current ICC-ES Evaluation Report
   b. Scratch and brown coat
   c. Reinforcing and leveling coat with reinforcing mesh
   d. Finish coat.

2. Portland cement plaster Functional Criteria
   a. Portland cement plaster application shall be to vertical substrates or to substrates sloped for positive drainage. Substrates sloped for drainage shall have additional protection from weather exposure that might be harmful to coating performance.
   b. Substrate materials and construction shall conform to CBC.
   c. Substrates shall be sound, dry and free of dust, dirt, laitance, efflorescence and other harmful contaminants.
   d. Substrate Dimensional Tolerances: Flat with 1/8 in within any 10 ft.
   e. Maximum deflection of substrate system under positive or negative design loads shall not exceed L/360 of span.

3. Expansion and Control Joints
   a. Continuous expansion and control joints shall be installed at locations in accordance with ASTM C1063 and ASTM C926 and drawings.
   b. Substrate movement, and expansion and contraction of Portland cement plaster and adjacent materials shall be taken into account in design of expansion joints, with proper consideration given to sealant properties, installation conditions, temperature range, coefficients of expansion of materials, joint width to depth ratios, and other material factors. Minimum width of expansion joints shall be as shown on the project drawings.
   c. In accordance with ASTM C1063, expansion or control joints shall be installed in walls not more than 144 ft² in area, and

not more than 100 ft² in area for all non-vertical applications. The distance between joints shall not exceed 18 ft in either direction or a length-to-width ratio of 2-½ to 1.

1.05 SUBMITTALS

A. Product Data
   1. Evaluation Reports and manufacturer's product data sheets.
B. Shop Drawings
C. Samples
   1. Submit samples for approval. Samples shall be of materials specified and of suitable size as required to accurately represent each color and texture used on project.
   2. Prepare each sample using same tools and techniques for actual project application. Maintain and make available, at job site, approved samples.
D. Quality Assurance/Control Submittals
   1. Design Data, Test Reports, Certificates, Manufacturers' Instructions, Manufacturers' Field Reports, Qualification Statements
E. Closeout Submittals

1.06 QUALITY ASSURANCE

A. Qualifications
   1. Manufacturer shall have marketed Portland cement plaster assemblies in California for at least ten years and shall have completed projects of same general scope and complexity.
   2. Applicator shall be experienced and competent in installation of Portland cement plaster materials, and shall provide evidence of a minimum of five years' experience in work similar to that required by this section.
   3. Products manufactured under ISO 9001:2000 Quality System.
   4. All cementitious materials shall come from a single manufacturer.
B. Regulatory Requirements
C. Certifications
D. Field Samples
   1. Provide a minimum (4) 2 ft. x 2 ft. sample boards of the Portland cement plaster assembly that shows texture and color prior to job mock-up for architect and owner to review and approve. Mock-up not required for repair/patching scope of work.
E. Mock-ups
   1. Furnish a complete 20 ft. long x 9 ft. high sample of each plaster system required on the project. Once the sample is installed and approved, it shall become the standard of quality expected for the systems throughout the project and will be allowed to be incorporated into the final work. Mock-up not required for repair/patching scope of work.

1.07 DELIVERY, STORAGE, AND HANDLING

A. Packing, Shipping, Handling, and Unloading
   1. Deliver Portland cement plaster assembly materials in original packaging with manufacturer's identification.
B. Acceptance at Site

1. Inspect materials upon delivery to assure that specified products have been received. Report defects or discrepancies to the construction manager.

C. Storage and Protection
1. Store Portland cement plaster assembly materials in a dry location, out of direct sunlight, off the ground, and protected from moisture.

1.08 PROJECT CONDITIONS

A. Project Environmental Requirements
1. Substrate Temperature: Do not apply Portland cement plaster assembly materials to substrates whose temperature are below 40°F or contain frost or ice.
2. Inclement Weather: Do not apply Portland cement plaster assembly materials during inclement weather, unless appropriate protection is employed.
3. Sunlight Exposure: Avoid, when possible, installation of the Portland cement plaster assembly materials in direct sunlight. Application of finishes in direct sunlight in hot weather may adversely affect aesthetics.
4. Do not apply Portland cement plaster base coats or Stucco finishes if ambient temperature falls below 40°F within 24 hours of application. Protect Portland cement plaster materials from uneven and excessive evaporation during dry weather and strong blasts of dry air.
5. Prior to installation, the substrate shall be inspected for surface contamination, or other conditions that may adversely affect the performance of the Portland cement plaster assembly materials and shall be free of residual moisture.

1.09 SEQUENCING

A. Coordinate Portland cement plaster assembly installation with other construction operations.

1.10 SCHEDULING

A. Provide sufficient manpower to ensure continuous operation, free of cold joints, scaffolding lines, variations in texture, etc.

1.11 WARRANTY

1.12 SYSTEM STARTUP

1.13 OWNER'S INSTRUCTIONS

1.14 COMMISSIONING

1.15 MAINTENANCE

A. The following materials shall be presented to the owner following the application of the work.
1. One container of finish for each color and texture utilized on the project.
2. A maintenance program for finishes as required.

PART 2 PRODUCTS

2.01 MANUFACTURERS

A. Portland Cement Plaster Coats
   1. LaHabra Stucco by Parex USA, Inc., 4125 E. La Palma Ave., Suite 250, Anaheim, CA 92807, or Equal.
   2. Omega Products International, Inc., 1681 California Ave., Corona, CA 92881
   3. Merlex Stucco, 2911 Orange-Olive Rd., Orange, CA 92865
   4. El Rey Stucco, 4100 ½ Broadway Blvd. SE, Albuquerque, NM 87105

B. Admixtures and Bonders
   1. Manufacturers listed in Part 2.01, Paragraph A.
   2. Larsen Products Corp., 8264 Preston Ct., Jessup, MD 20794

C. Metal Lath Products
   1. California Expanded Metal Products Company (CEMCO), 263 North Covina Lane, City of Industry, CA 91744, or Equal.

2.02 EXISTING PRODUCTS

2.03 MATERIALS

A. Water
   1. Clean and free from injurious amounts of acid, alkali, and organic matter.

B. Sand
   1. Clean and free from organic matter
   2. Sampling and testing must comply with ASTM C144 or C897.

C. Portland Cement Scratch and Brown Coat
   1. (LaHabra) Fiber-47 Fastwall Scratch and Brown Concentrate
   2. (Omega) Equivalent Product
   3. (Merlex) Equivalent Product
   4. (El Rey) Equivalent Product

D. Leveling and Reinforcing Coat
   1. (LaHabra) Parex USA Stucco Level Coat with embedded Parex USA Stucco Mesh
   2. (Omega) Equivalent Product
   3. (Merlex) Equivalent Product
   4. (El Rey) Equivalent Product

E. Admixtures and Bonders
   1. (LaHabra) Parex USA Adacryl Admix and Bonder
   2. (Larson) Weldcrete Concrete Bonding Agent
   3. (Omega) Equivalent Product
   4. (Merlex) Equivalent Product
   5. (El Rey) Equivalent Product

F. Cement Stucco Finish Coat
   1. Smooth Finish
      a. (LaHabra) Santa Barbara Mission Finish (SBMF), integrally colored with fade-resistant pigments, tint base, color as selected by Architect.
      b. (Omega) Equivalent Product
      c. (Merlex) Equivalent Product
      d. (El Rey) Equivalent Product

2.04 MANUFACTURED UNITS
2.05 EQUIPMENT
2.06 COMPONENTS
2.07 ACCESSORIES
- A. General: Conform to ASTM C847, ASTM C933, ASTM C1032, ASTM C1063
- B. Metal Lath: ASTM C847, ICC-ES-ESR-1623
  1. Vertical Applications
     a. (CEMCO) Self-Furred 3.4 Expanded Diamond Mesh Metal Lath
        1. Material: 0.0231-inch-thick cold-formed steel complying with ASTM A653
        2. Weight: 3.4 lb/yd2
        3. Coating: G60, ASTM A653
        4. Self-Furred Height: ¼-inch, dimple or grooved
        5. Paper backing: No
     b. Ceilings, Soffits
        (CEMCO) 3/8-inch 3.4 Hi Rib Lath
        1. Material 0.015-inch-thick cold-formed steel complying with ASTM A653
        2. Weight: 3.4 lb/yd2
        3. Coating: G60, ASTM A653
        4. Self-furred Height: 3/8-inch, continuous ribs at 4-inches on center
        5. Paper backing: No
- C. Accessories: Manufacturer's standard steel products with minimum G60 galvanizing unless otherwise indicated
- D. Seals, Sealants and Bond Breakers: Sealants shall conform to ASTM C 920, Grade NS, Class 25, Use NT. Backer rod shall be closed-cell polyethylene foam.

2.08 MIXES
2.09 FABRICATION
2.10 FINISHES
- A. Finish texture shall be per the "Technical Service Information Bureau", Plaster & Drywall Assemblies Manual, Chapter 9, Plaster Textures & Acrylic Finishes; Finish as Follows:
  1. Cement Stucco Finish Coat Texture: Smooth
- B. Painting
  1. All stucco finish coat to receive a paint finish per 09 91 13 Exterior Painting.

2.11 SOURCE QUALITY CONTROL

PART 3 EXECUTION

3.01 INSTALLERS
3.02 EXAMINATION
- A. Site Verification of Conditions
  1. Substrate Examination
     a. Substrate shall be of a type approved by Portland cement plaster assembly manufacturer and CBC.
     b. Substrate shall be examined for soundness, and other harmful conditions.

c. Substrate shall be free of dust, dirt, laitance, efflorescence, and other harmful contaminants.
d. Inform Architect of discrepancies preventing proper installation of Portland cement plaster assembly. Do not proceed with the Portland cement plaster assembly work until unsatisfactory conditions are corrected.
e. All scaffolding in area of work shall be tented.

3.03 PREPARATION

3.04 ERECTION

3.05 INSTALLATION

A. Metal Lath Products (Three-Coat System only)
1. Install in accordance with applicable ICC-ES Evaluation Report.

3.06 APPLICATION

A. Mix products in accordance with manufacturer's instructions, including the applicable Portland cement plaster assembly product data sheets and application guidelines.
B. Portland cement plaster assembly and its related materials shall conform to the requirements of ASTM C926. Follow manufacturer's current Portland cement plaster Application Guide.
C. Water Resistive Barrier (Three Coat System only, Vertical Surfaces only,)
1. (2) two layers of water-resistive barrier is placed over all sheathing and installed according to manufacturer's instructions, see Section 07 25 00 Water Resistive Barriers
D. Bonding Agent
1. Apply in accordance with manufacturer's instructions.
E. Portland cement plaster Base
1. Scratch Coat (Three Coat System only)
a. Apply scratch coat to a minimum thickness of 3/8-inch, using sufficient trowel pressure to key Portland cement plaster into lath or to create bond to substrates as applicable.
b. Prior to initial set, scratch horizontally to provide key for bond of brown coat.
c. Moist cure scratch coat with clean potable water for at least 48 hours in accordance with ASTM C926 and the building codes following initial application (unless brown coat is applied as soon as the scratch coat has achieved sufficient rigidity to support the brown coat).
2.. Brown Coat
a. Apply brown coat to a minimum thickness of 3/8-inch, using sufficient trowel pressure to key Portland cement plaster into scratch coat or CMU substrate.
b. Rod surface to true plane and float to densify.
c. Trowel to smooth and uniform surface to receive finish coat.
4. Moist cure brown coat with clean potable water for at least 48 hours, in accordance with ASTM C926 and the building codes.
c. Leveling and Reinforcing Coat

1. After moist curing, allow Brown Coat to air dry a minimum of 24 hours before applying the leveling and reinforcing coat.
2. Using a stainless-steel trowel, apply the Level Coat over the Brown Coat Base at a thickness of 1/16 – 3/32-inch
3. Fully embed the mesh into the wet Level Coat including diagonal strips at corners of openings and trowel smooth. Overlap seams 2-½ inches.

d. Admixtures and Bonders
1. Apply/mix according to manufacturer's product datasheets and application instructions.

e. Cement Stucco Finish
1. Remove surface contaminants such as dust or dirt without damaging the substrate.
2. Ambient and surface temperature must be 40°F or higher during application and drying time. Supplemental heat and protection from precipitation must be provided as needed.
3. Use only on surfaces that are sound, clean, dry, unpainted, and free from any residue that might affect the ability of the finish to bond to the surface.
4. After moist curing, allow the Portland cement plaster base to air dry in accordance with Portland cement plaster Application Guide depending on type of finish coat and primer.
5. Apply Stucco finish in number of coats thickness recommended by manufacturer to achieve texture indicated, using sufficient trowel pressure or spray velocity to bond finish to base coat.
6. Protect finish coats from inclimate weather until completely dry.

5. Curing
a. Keep Portland cement plaster base coat moist for at least 48 hours (longer in dry weather) by lightly fogging walls. Start light fogging after initial set of 1–2 hours. Allow to thoroughly dry prior to application of finish coat.
b. Allow finish coat 28 days for curing.

3.07 CONSTRUCTION
3.08 REPAIR/RESTORATION
3.09 RE-INSTALLATION
3.10 FIELD QUALITY CONTROL
A. Manufacturer's representative shall make weekly site visits during application of work.

3.11 ADJUSTING
3.12 CLEANING
A. Remove and legally dispose of Portland cement plaster component debris material from job site.

3.13 DEMONSTRATION
3.14 PROTECTION

A. Provide protection of installed materials from water infiltration into or behind them.
B. Provide protection of installed Portland cement plaster from dust, dirt, precipitation, and freezing during installation.
C. Provide protection of installed finish from dust, dirt, precipitation, freezing, and continuous high humidity until fully dry.
D. Clean exposed surfaces using materials and methods recommended by the manufacturer of the material or product being cleaned. Remove and replace work that cannot be cleaned to the satisfaction of the Architect/Owner.

3.15 SCHEDULES

END OF SECTION

SECTION 09 29 00
GYPSUM BOARD

PART 1 GENERAL

1.01 SUMMARY
- A. Section Includes
  1. Gypsum Board
  2. Glass-Mat Faced Gypsum Backing Board
  3. Gypsum Board Accessories
- B. Products Supplied But Not Installed Under This Section
- C. Products Installed But Not Supplied Under This Section
- D. Related Sections
  1. 06 10 00 Rough Carpentry
  2. 06 16 43 Gypsum Sheathing
  3. 07 92 00 Joint Sealants
  4. 09 91 23 Interior Painting
- E. Allowances
- F. Unit Prices
- G. Measurement Procedures
- H. Payment Procedures
- I. Alternates

1.02 REFERENCES
- A. ASTM C473 Standard Test Methods for Physical Testing of Gypsum Panel Products.
- B. ASTM C518 Standard Test Method for Steady-State Thermal Transmission Properties by Means of the Heat Flow Meter Apparatus.
- C. ASTM C630 Standard Specification for Water-Resistant Gypsum Backing Board.
- D. ASTM C840 Standard Specification for Application and Finishing of Gypsum Board.
- E. ASTM C1396 Standard Specification for Gypsum Board.
- F. ASTM C1658 Standard Specification for Glass Mat Gypsum Panels.
- G. ASTM D3273 Standard Test Method for Resistance to Growth of Mold on the Surface of Interior Coatings in an Environmental Chamber.
- H. ASTM D6329 Standard Guide for Developing Methodology for Evaluating the Ability of Indoor Materials to Support Microbial Growth Using Static Environmental Chambers.
- I. ASTM E84 Standard Test Method for Surface Burning Characteristics of Building Materials.
- J. GA-214 Recommended Levels of Gypsum Board Finish.
- K. GA-216 Application and Finishing of Gypsum Panel Products.

1.03 DEFINITIONS

1.04 SYSTEM DESCRIPTIONS

1.05 SUBMITTALS
- A. Product Data
  1. Submit manufacturer's data sheets on each product to be used, including:
     - a. Gypsum board, joint tape and finish.
     - b. Preparation instructions and recommendations.
     - c. Storage and handling requirements and recommendations.

d. Installation methods.

B. Shop Drawings
1. Indicate details associated with fireproofing and acoustical seals, opening locations and details, and opening termination details.

C. Samples
1. Provide samples of texture finishes for approval.

D. Quality Assurance/Control Submittals
1. Design Data, Test Reports, Certificates, Manufacturers' Instructions, Manufacturers' Field Reports, Qualification Statements
a. Provide fire test reports on fire-rated wallboard assemblies. Submit copies of evidence of fire hazard classification for wallboard. Certified test reports of other acceptable testing agencies, which perform testing in accordance with ASTM E84, E90 and E119 are acceptable.
b. Provide certification that materials meet these specifications.
c. Provide manufacturer's printed instructions for installation of assemblies.

E. Closeout Submittals

1.06 QUALITY ASSURANCE

A. Qualifications
1. Provide adequate numbers of skilled personnel who are thoroughly trained and experienced in the necessary crafts and who are completely familiar with the specified requirements and the methods needed for proper performance of the work in this section.

B. Regulatory Requirements
1. Provide products labeled with third party certification stamp of fire-resistance characteristics, including ITS and UL.
1. Provide products that comply with the following limits for surface burning characteristics when tested per ASTM E84
1. Flame spread: 25 maximum
2. Smoke developed: 450 maximum

C. Certifications

D. Field Samples

E. Mock-ups
1. At a location on the site where accepted by the Architect, provide a mock-up gypsum wallboard panel.
2. Make the panel approximately 4'-0" square.
3. Provide one mock-up panel for each gypsum wallboard finish used on the Work.
4. The mock-ups may be used as part of the work, and included in the finished work, when accepted by the Architect.
5. Revise as necessary to secure the Architect's acceptance.
6. The mock-up panels, when accepted by the Architect, will be used as datum points for comparison with the remainder of the work of this section for the purpose of acceptance or rejection.

1.07 DELIVERY, STORAGE, AND HANDLING

A. Packing, Shipping, Handling, and Unloading

1. Deliver materials in manufacturer's unopened containers, packages or bundles identified with manufacturer's name, brand, type, and grade clearly marked.
2. Deliver fire rated materials bearing testing agency label and required fire classification number.

B. Acceptance at Site

C. Storage and Protection
1. Per GA-801, store products inside under cover and keep them dry and protected against damage from weather, direct sunlight, surface contamination, corrosion, construction traffic, and other damaging causes.
2. Neatly stack gypsum boards flat to prevent sagging.
3. Handle gypsum boards to prevent damage to edges, ends, and surfaces.
4. Protect adhesives and joint compounds from freezing or overheating per manufacturer's instructions.
5. Protect metal products from rusting.

1.08 PROJECT CONDITIONS

A. Project Environmental Requirements
1. Comply with ASTM C840 and GA-216 requirements or gypsum board manufacturer's written recommendations, whichever are more stringent.
2. Do not install paper-faced gypsum panels until installation areas are enclosed and conditioned.
3. Do not install panels that are wet, those that are moisture damaged, and those that are mold damaged.
4. Do not install wallboard products unless installation areas comply with minimum temperature and ventilation requirements recommended by manufacturer. As a minimum, provide temperatures above 50 degrees F during and after installation.
5. Under slow drying conditions, allow additional drying time between coats of joint treatment.
6. Protect installed materials from drafts during hot, dry weather.
7. Protect metal products form rusting.

1.09 SEQUENCING

1.10 SCHEDULING

1.11 WARRANTY

A. Provide products that offer twelve months of coverage against in-place exposure damage (delamination, deterioration and decay).

B. Three years against manufacturing defects.

1.12 SYSTEM STARTUP

1.13 OWNER'S INSTRUCTIONS

1.14 COMMISSIONING

1.15 MAINTENANCE

PART 2 PRODUCTS

2.01 MANUFACTURERS

A. Georgia-Pacific Gypsum, 133 Peachtree Street, Atlanta GA 30303, or Equal.

B. United States Gypsum Company, 550 West Adams Street, Chicago, IL 60661

2.02 EXISTING PRODUCTS
2.03 MATERIALS
A. Gypsum Board – Moisture and mold-resistant
1. (GP) ToughRock Fireguard X Mold-Guard
a. Thickness: 5/8-inch, Type X
b. Width: 4-feet
c. Length: 8-feet min.
d. Edges: Tapered
2. (USG) SHEETROCK Mold Tough Firecode Core
a. Thickness: 5/8-inch, Type X
b. Width: 4-feet
c. Length: 8-feet min.
d. Edges: Tapered
B. Glass-Mat Faced Gypsum Backing Board
1. (GP) DensShield Tile Backer
a. Thickness: 5/8-inch, Type X
b. Width: 4-feet
c. Length: 8-feet min.
d. Edges: Square
2. (USG) Equivalent Product
C. Fasteners:
1. Metal Framing: ASTM C1002.
2. Wood Framing: ASTM C1002.
3. Steel Drill Screws: ASTM C 954.
D. Joint System
1. Tape, bedding compound, topping compound: ASTM C 475.
E. Trims
1. Metal Beads: ASTM C1047; formed galvanized steel angle, minimum base steel 0.014 inch thick, sizes as required to suit substrate.
2. Metal Edge/casing bead: ASTM C1047; formed galvanized steel trim, minimum base steel 0.014 inch thick, sizes as required to suit substrate.
3. Metal Control Joints: ASTM C1047; roll-formed zinc control joints with perforations in flanges; center channel with removable tape strip over channel.

2.04 MANUFACTURED UNITS
2.05 EQUIPMENT
2.06 COMPONENTS
2.07 ACCESSORIES
2.08 MIXES
2.09 FABRICATION
2.10 FINISHES
2.11 SOURCE QUALITY CONTROL

PART 3 EXECUTION

3.01 INSTALLERS
3.02 EXAMINATION
A. Site Verification of Conditions
1. Examine areas and conditions under which Work of this Section will be performed. Correct conditions detrimental to timely and proper

completion of Work. Do not proceed until unsatisfactory conditions are corrected.

2. Examine substrates to which gypsum board construction attaches or abuts. Verify pre-set hollow metal frames, cast-in anchors, and structural framing for compliance with requirements for installation tolerances and other conditions affecting performance of gypsum board construction.

3.03 PREPARATION

3.04 ERECTION

3.05 INSTALLATION

A. Install and finish gypsum board to comply with ASTM C840 and GA-216.

1. Locate exposed end-butt joints as far from center of walls and ceilings as possible, and stagger not less than 24 inches in alternate courses of board.
2. Install ceiling boards across framing in the manner which minimizes the number of end-butt joints, and which will avoid end joints in the central area of each ceiling. Stagger end joints a minimum of 24 inches.
3. Install wall and partition boards vertically unless otherwise noted.
4. Install exposed gypsum board with face side out. Do not install imperfect, damaged, or damp boards. Butt boards together for a light contact at edges and ends with not more than 1/8-inch open space between boards. Do not force into place.
5. Locate either edge or end joints over supports, except in horizontal applications or where intermediate supports or gypsum board back-blocking is provided behind end joints. Position boards so that like edges abut, tapered edges against tapered edges, and mill-cut or field-cut ends against mill-cut or field-cut ends. Do not place tapered edges against cut edges or ends. Stagger vertical joints over different studs on opposite sides of partitions.
6. Attach gypsum board to studs so that leading edge or end of each board is attached to open (unsupported) edge of stud flange first.
7. Attach gypsum board to supplementary framing and blocking provided for additional support at openings and cut-outs.
8. Form control joints and expansion joints at locations indicated on Drawings, and as recommended by Gypsum Association, with space between edges of boards prepared to receive trim accessories.
9. Maximum distance between control joints: 30 linear feet.
10. Cover both faces of stud partition framing with gypsum board in concealed spaces (above ceilings, etc.), except in chase walls that are properly braced internally.
11. Fit gypsum board around ducts, pipes, and conduits.
12. Where partitions intersect open concrete coffers, cut gypsum board to fit profile of coffers and allow 1/4 to ½-inch wide joint for sealant.
13. Isolate perimeter of non-load bearing drywall partitions at structural abutments. Provide 1/4 to ½-inch space and trim edge with "U" bead edge trim. Seal joints with acoustical sealant.
14. Where sound-rated drywall construction is indicated on Drawings, seal construction at perimeters, control and expansion joints, openings, and penetrations with a continuous bead of acoustical sealant including a bead at both faces of partitions. Comply with ASTM C919 and manufacturer's recommendations for location of

edge trim, and close off sound-flanking paths around or through construction, including sealing of partitions above acoustical ceilings.

15. For double-layer partition systems, construction above acoustical plaster ceilings may be installed with base layer only.
16. Space fasteners in gypsum boards per referenced gypsum board application and finishing standard and manufacturer's recommendations.
17. Curved Gypsum Partitions and Surfaces: Install gypsum board panels horizontally with wrapped edges perpendicular to metal framing per manufacturer's recommendations.

B. Not Used

C. Accessories
1. Where feasible, use the same fasteners to anchor trim accessory flanges as required to fasten gypsum board to the supports. Otherwise, fasten flanges to comply with manufacturer's recommendations.
2. Install metal corner beads at external corners.
3. Install metal edge trim whenever edge of gypsum board would otherwise be exposed or semi-exposed, except where plastic trim is indicated on Drawings. Provide type with face flange to receive joint compound except where "U" bead (semi-finishing type) is indicated.
4. Install gypsum board reveals where indicated on Drawings.
5. Install control joints at locations indicated on Drawings, or if not indicated, at spacing and locations required by referenced gypsum board application and finish standard and approved by Architect for visual effect.

D. Joint Treatment
1. Inspect areas to be joint treated, verifying that the gypsum board fits snugly against supporting framework.
2. In areas where joint treatment and compound finishing will be performed, maintain a temperature of not less than 55 degrees F for 24 hours prior to commencing the treatment, and until joint and finishing compounds have dried.
3. Apply the joint treatment and finishing compound by machine or hand tool.
4. Provide a minimum drying time of 24 hours between coats, with 5. additional drying time in poorly ventilated areas.
5. Embedding Compounds
    a. Apply to gypsum board joints and fastener heads in a thin uniform layer.
    b. Spread the compound not less than 3 inches wide at joints, center the reinforcing tape in the joint, and embed the tape in the compound. Then, spread a thin layer of compound over the tape.
    c. After this treatment has dried, apply a second coat of embedding compound to joints and fastener heads, spreading in a thin uniform coat to not less than 6 inches wide at joints. Feather edges.
    d. Sand between coats.
    e. When thoroughly dry, sandpaper to eliminate ridges and high points.

6. Finishing Compounds:
    a. After embedding compound is thoroughly dry and has been completely sanded, apply a coat of finishing compound to joints and fastener heads.
    b. Feather the finishing compound to not less than 12 inches wide.
    c. When thoroughly dry, sandpaper to obtain a uniform smooth surface, taking care to not scuff the paper surface of the board.

E. Level of Finish
    1. See 3.15 Schedules

3.06 APPLICATION
3.07 CONSTRUCTION
3.08 REPAIR/RESTORATION
3.09 RE-INSTALLATION
3.10 FIELD QUALITY CONTROL

A. Maximum Variation of Finished Gypsum Board Surface from True Flatness: 1/8 inch in 10 feet in any direction.

3.11 ADJUSTING
3.12 CLEANING

A. In addition to other requirements for cleaning, use necessary care to prevent scattering gypsum board scraps and dust, and to prevent tracking gypsum and joint finishing compound onto floor surfaces.
B. At completion of each segment of installation in a room or space, promptly pick up and remove scraps, debris, and surplus materials of this Section from working area.

3.13 DEMONSTRATION
3.14 PROTECTION

A. Provide final protection and maintain conditions that ensure gypsum board construction being without damage or deterioration at time of Substantial Completion.

3.15 SCHEDULES

A. Level of finish shall be as per Gypsum Association publication, GA-214 as noted herein.
    1. Sand between each coat of compound as required to remove ridges and other imperfections.
    2. Where fire resistance rating is required, level of finish shall meet fire rating requirement.

    3. Level of finish
        a. Type 0: **Draft stops**
            1. No taping, finishing or accessories required.

        b. Level of finish Type 1: **Plenum areas above ceilings, areas concealed and not normally open to view.**
            1. Tape set in joint compound at joints and interior angles.
            2. Tool marks and ridges are acceptable.

c. Level of finish Type 2: **Substrate to tiling, acoustic tile.**
   1. Tape embedded in joint compound at joints and interior angles, wiped with joint knife leaving thin coat of compound over tape.
   2. Accessories covered with one coat of joint compound.
   3. Fasteners covered with one coat of joint compound.
   4. Surface shall be free of excess joint compound.
   5. Tool marks and ridges are acceptable.

d. Level of finish Type 3: **Substrate to wall coverings, except presentation dry erase wallcoverings**
   1. Tape embedded in joint compound at joints and interior angles, wiped with joint knife leaving thin coat of compound over tape.
   2. Cover tape with one separate coat of joint compound.
   3. Accessories covered with two separate coats of joint compound.
   4. Fasteners covered with two separate coats of joint compound.
   5. Joint compound shall be smooth and free of tool marks and ridges. 6. Sand to achieve a smooth paint-ready surface.

e. Level of finish Type 4: **Typical walls/ceilings to receive paint finish, Glass-Mat Faced Gypsum Backing Board Areas**
   1. Tape embedded in joint compound at joints and interior angles, wiped with joint knife leaving thin coat of compound over tape.
   2. Cover tape with two separate coats of joint compound.
   3. Accessories covered with three separate coats of joint compound.
   4. Fasteners covered with three separate coats of joint compound.
   5. Joint compound shall be smooth and free of tool marks and ridges.
   6. Sand to achieve a smooth paint-ready surface.

f. Level of finish Type 5: **Restroom walls, Restroom/Shower Ceilings, Substrate to presentation dry erase wallcoverings**
   1. Tape embedded in joint compound at joints and interior angles, wiped with joint knife leaving thin coat of compound over tape.
   2. Cover tape with two separate coats of joint compound.
   3. Accessories covered with three separate coats of joint compound.
   4. Fasteners covered with three separate coats of joint compound.
   5. A skim coat of joint compound shall be applied to entire surface.

6. The surface shall be smooth and free of ridges and defects. Sand the surface to a smooth, paint-ready condition.

B. Gypsum Board Type
   1. Gypsum Board – Moisture and mold-resistant
      a. All walls and ceilings/soffits unless noted otherwise
   2. Glass-Mat Faced Gypsum Backing Board
      a. Where indicated on drawings/finish schedule

END OF SECTION

SECTION 09 30 00
TILING

PART 1 GENERAL

1.01 SUMMARY

A. Section Includes
   1. Tile
   2. Trim and Accessories
   3. Setting Materials
   4. Waterproof Membranes and Uncoupling Membranes
   5. Glass-Mat Faced Gypsum Backing Boards
   6. Cement Backer Boards

B. Products Supplied But Not Installed Under This Section

C. Products Installed But Not Supplied Under This Section

D. Related Sections
   1. 07 92 00 Joint Sealants

E. Allowances

F. Unit Prices

G. Measurement Procedures

H. Payment Procedures

I. Alternates

1.02 REFERENCES

A. ANSI A108.1A - Specifications for Installation of Ceramic Tile in the Wet-Set Method with Portland Cement Mortar.

B. ANSI A108.1B - Specifications for Installation of Ceramic Tile on a Cured Portland Cement Mortar Setting Bed with Dry-Set or Latex Portland Cement Mortar.

C. ANSI A108.1C - Specifications for Contractors Option: Installation of Ceramic Tile in the Wet-Set Method with Portland Cement Mortar -or- Installation of Ceramic Tile on a Cured Portland Cement Mortar Setting Bed with Dry-Set or Latex Portland Cement Mortar.

D. ANSI A108.4 - Specifications for Ceramic Tile Installed with Organic Adhesives or Water-Cleanable Tile Setting Epoxy Adhesive.

E. ANSI A108.5 - Specifications for Ceramic Tile Installed with Dry-Set Portland Cement Mortar or Latex-Portland Cement Mortar.

F. ANSI A108.6 - Specifications for Ceramic Tile Installed with Chemical-Resistant, Water-Cleanable Tile-Setting and -Grouting Epoxy.

G. ANSI A108.8 - Specifications for Ceramic Tile Installed with Chemical-Resistant Furan Mortar and Grout.

H. ANSI A108.9 - Specifications for Ceramic Tile Installed with Modified Epoxy Emulsion Mortar/Grout.

I. ANSI A108.10 - Specifications for Installation of Grout in Tilework.

J. ANSI A118.1 - Standard Specification for Dry-Set Portland Cement Mortar.

K. ANSI A118.3 - Chemical-Resistant, Water-Cleanable, Tile-Setting and -Grouting Epoxy and Water-Cleanable Tile-Setting Epoxy Adhesive.

L. ANSI A118.4 - Latex-Portland Cement Mortar.

M. ANSI A118.5 - Chemical-Resistant Furan Mortar and Grout.

N. ANSI A118.6 - Standard Ceramic Tile Grouts.

O. ANSI A118.7 - Polymer Modified Cement Grouts

P. ANSI A118.8 - Modified Epoxy Emulsion Mortar/Grout.

Q. ANSI A118.9 - Test Methods and Specifications for Cementitious Backer Units
R. ANSI A118.10 - Load bearing, Bonded, Waterproof Membranes for Thinset Ceramic Tile and Dimensional Stone.
S. ANSI A118.11 - Exterior Grade Plywood (EGP) Latex-Portland Cement Mortar.
T. ANSI A136.1 - Organic Adhesives for Installation of Ceramic Tile.
U. ANSI A137.1 - Specifications for Ceramic Tile.
V. ASTM C 50 - Standard Practice for Sampling, Sample Preparation, Packaging, and Marking of Lime and Limestone Products.
W. ASTM C 144 - Standard Specification for Aggregate for Masonry Mortar.
X. ASTM C 207 - Standard Specification for Hydrated Lime for Masonry Purposes.
Y. ASTM C 241 - Standard Test Method For Abrasion Resistance of Stone Subjected to Foot Traffic.
Z. ASTM C 503 - Standard Specification for Marble Dimension Stone.
AA. ASTM C 615 - Standard Specification for Granite Dimension Stone.
BB. ASTM C 629 - Standard Specification for Slate Dimension Stone.
CC. ASTM C 847 - Standard Specification for Metal Lath.
DD. ASTM C 1028 - Standard Test method for Determining the Static Coefficient of Friction or Ceramic Tile and Other Like Surfaces by the Horizontal Dynamometer Pull Meter Method.
EE. ASTM D 4397 - Standard Specification for Polyethylene Sheeting for Construction, Industrial, and Agricultural Applications.
FF. Tile Council of North America (TCNA): TCA Handbook for Ceramic Tile Installation, current edition.

1.03 DEFINITIONS

1.04 SYSTEM DESCRIPTIONS

A. Design Requirements, Performance Requirements
1. Static Coefficient of Friction
a. Tile on walkway surfaces shall be provided with the following values as determined by testing in conformance with ASTM C 1028.
1. Level Surfaces: Minimum of 0.6 (Wet).
2. Step Treads: Minimum of 0.6 (Wet).
3. Ramp Surfaces: Minimum of 0.8 (Wet).

1.05 SUBMITTALS

A. Product Data
1. Submit manufacturer’s data sheets on each product to be used
B. Shop Drawings
1. Submit scaled drawings indicating tile layout, pattern, color arrangement, perimeter conditions, junctions with dissimilar materials, control and expansion joints, thresholds, ceramic accessories, and setting details.
C. Samples
1. Submit color charts illustrating full range of colors and patterns.
D. Quality Assurance/Control Submittals
1. Design Data, Test Reports, Certificates, Manufacturers’ Instructions, Manufacturers’ Field Reports, Qualification Statements
a. Submit manufacturer’s preparation instructions and recommendations

b. Submit manufacturer’s storage and handling requirements and recommendations.
c. Submit manufacturer’s installation methods
d. Submit manufacturer’s certificate that products meet or exceed specified requirements.

E. Closeout Submittals
1. Submit maintenance data that includes recommended cleaning methods, cleaning materials, stain removal methods, and polishes and waxes.

1.06 QUALITY ASSURANCE
A. Qualifications
1. Installer shall specialize in performing the work of this section with minimum two years' experience.
2. Obtain each type and color of tile from a single source. Obtain each type and color of mortar, adhesive and grout from a single source.
B. Regulatory Requirements
1. Ceramic Tile Flooring shall be stable, firm, and slip resistant. **CBC Section 11B-302.1.**
C. Certifications
D. Field Samples
E. Mock-ups
1. Mount tile and apply grout on two 4-foot x 4-foot plywood panels, illustrating pattern, color variations, and grout joint size variations.
F. Pre-installation Meetings

1.07 DELIVERY, STORAGE, AND HANDLING
A. Packing, Shipping, Handling, and Unloading
1. Deliver and store products in manufacturer's unopened packaging until ready for installation.
B. Acceptance at Site
C. Storage and Protection
1. Protect adhesives and liquid additives from freezing or overheating in accordance with manufacturer's instructions.
2. Store tile and setting materials on elevated platforms, under cover and in a dry location and protect from contamination, dampness, freezing or overheating.
D. Waste Management and Disposal

1.08 PROJECT CONDITIONS
A. Project Environmental Requirements
1. Do not install adhesives in an unventilated environment.
2. Maintain ambient and substrate temperature of 50 degrees F during tiling and for a minimum of 7 days after completion.
B. Existing Conditions

1.09 SEQUENCING
1.10 SCHEDULING
1.11 WARRANTY
1.12 SYSTEM STARTUP
1.13 OWNER’S INSTRUCTIONS
1.14 COMMISSIONING
1.15 MAINTENANCE

A. Extra Materials
   1. Provide for Owner's use a minimum of 2 percent of the primary sizes and colors of tile specified, boxed and clearly labeled.
B. Maintenance Service

PART 2 PRODUCTS

2.01 MANUFACTURERS
A. Ceramic Tile
   1. Daltile Corporation, 7834 C.F. Hawn Fey. P.O. Box 170130, Dallas, TX 75217, or Equal.
B. Non-Ceramic Trim
   1. Schluter Systems, L.P., 194 Pleasant Ridge Road, Plattsburgh, NY 12901, or Equal.
C. Adhesives, Mortar Bed Materials, Mortar Bond Coat Materials, Grout
   1. Laticrete International, Inc., 22550 Temescal Canyon Road, Corona, CA 92883, or Equal.
   2. Custom Building Products, 7711 Center Ave. Ste 500, Huntington Beach, CA 92647
   3. Bostik, Inc., 11320 W. Watertown Plank Road, Wauwatosa, WI 53226
   4. Schluter Systems, L.P., 194 Pleasant Ridge Road, Plattsburgh, NY 12901
D. Waterproof Membranes and Uncoupling Membranes
   1. Schluter Systems, L.P., 194 Pleasant Ridge Road, Plattsburgh, NY 12901, or Equal.
E. Glass-Mat Faced Gypsum Backing Boards
   1. Georgia-Pacific Gypsum, 133 Peachtree Street, Atlanta GA 30303, or Equal.
   2. United States Gypsum Company, 550 West Adams Street, Chicago, IL 60661
F. Cement Backing Boards
   1. Reference Standard: ANSI A118.9 or ASTM C1325, Type A
   2. PermaBASE Building Products, LLC, 2001 Rexford Rd., Charlotte, NC 28211 or equal.
   3. United States Gypsum Company, 550 West Adams Street, Chicago, IL 60661

2.02 EXISTING PRODUCTS
2.03 MATERIALS
A. Tile
   1. Ceramic Floor Tile
      a. (Daltile) Natural Hues
         1. Thickness: 5/16-inch
         2. Joints: 1/8-inch
         3. Size and Shape: 2”x2”
         4. Surface Finish: To be selected from manufacturer’s available range
         5. Colors: Price groups 1 and 2
         6. Pattern: To be issued by Architect prior to installation
         7. Trim Units: n/a

2. Ceramic Base Tile
    a. (Daltile) Natural Hues
        1. Thickness: 5/16-inch
        2. Joints: 1/8-inch
        3. Size and Shape: 2″x8″
        4. Surface Finish: To be selected from manufacturer's available range
        5. Colors: Price groups 1 and 2
        6. Pattern: To be issued by Architect prior to installation
        7. Trim Units: n/a
3. Ceramic Wall Tile 1
    a. (Daltile) Natural Hues
        1. Thickness: 5/16-inch
        2. Joints: 1/8-inch
        3. Size and Shape: 2″x8″
        4. Surface Finish: To be selected from manufacturer's standard range
        5. Colors: Price groups 1 and 2
        6. Pattern: To be issued by Architect prior to installation
        7. Trim Units: n/a
4. Ceramic Wall Tile 2
    a. (Daltile) Natural Hues
        1. Thickness: 5/16-inch
        2. Joints: 1/8-inch
        3. Size and Shape: 2″x8″
        4. Surface Finish: To be selected from manufacturer's standard range
        5. Colors: Price groups 1 and 2
        6. Pattern: To be issued by Architect prior to installation
        7. Trim Units: n/a

B. Trim and Accessories
1. Non-Ceramic Trim
    a. Finishing, Edge Protection, and Transition Profiles
        1. (Schluter) As detailed
    b. Movement Joints and Cove-Shaped Profiles
        1. (Schluter) As detailed
2. Stone Thresholds
    a. Natural Stone Slab (Marble Dimension Stone)
        1. Size: Custom length, Custom width x 5/8-inch thick
        2. Material: Marble, complying with ASTM C 503 for exterior use and with a minimum abrasive hardness of 10 when tested in accordance with ASTM C 241.
        3. Color/Finish: As selected by architect.
        4. Edge: 2:1 bevel edges

C. Setting Materials
   1. Cementitious Bond Coat
      a. ANSI 118.15 or better
   2. Cementitious Bond Coat (When waterproof membrane is used)
      a. ANSI 118.1 Premium Unmodified as manufactured by:
         1. (Bostik) Ditra-Set
         2. (Schluter) ALL-SET
   3. Mortar Bed, Metal Lath, and Cleavage Membrane: ANSI A108.1A
   4. Grout
      a. (CBP) Prism Ultimate Performance Grout
   5. Joint Sealant:
      a. 100% Silicone Sealant, ASTM C-920, Type S, Grade NS, Class 25

D. Waterproof Membranes and Uncoupling Membranes
   1. Uncoupling Membranes: ANSI A118.10
      a. (Schluter) DITRA with all preformed corners and manufacturer's recommended accessories.
   2. Waterproofing Membrane at Floors: ANSI A118.10
      a. (Schluter) DITRA with all preformed corners and manufacturer's recommended accessories.
      b. (Schluter) KERDI with all preformed corners and manufacturer's accessories.
   3. Waterproofing Membrane at Walls and Shower Floors: ANSI A118.10
      a. (Schluter) KERDI with all preformed corners and manufacturer's accessories.

E. Glass-Mat Faced Gypsum Backing Boards
   1. (GP) DensShield Fireguard Tile Backer
      a. Thickness: 5/8-inch, Type X
      b. Width: 4-feet
      c. Length: 5-feet or 8-feet
      d. Edges: Square
   2. (USG) DUROCK Brand Glass-Mat Tile Backerboard
      a. Thickness: 5/8-inch, Type X
      b. Width: 4-feet
      c. Length: 5-feet or 8-feet min.
      d. Edges: Square

F. Cement Backing Boards
   1. ANSI A118.9 or ASTM C1325, Type A
      a. Thickness: 1/2-inch
      b. Width: 4-feet
      c. Length: 5-feet or 8-feet
      d. Edges: Round or Square

2.04 MANUFACTURED UNITS
2.05 EQUIPMENT
2.06 COMPONENTS
2.07 ACCESSORIES
2.08 MIXES
2.09 FABRICATION
2.10 FINISHES
2.11 SOURCE QUALITY CONTROL

PART 3 EXECUTION

3.01 INSTALLERS

3.02 EXAMINATION

A. Site Verification of Conditions

1. Verify that wall surfaces are free of substances which would impair bonding of setting materials, smooth and flat within tolerances specified in ANSI A137.1, and are ready to receive tile.
2. Verify that sub-floor surfaces are dust-free, and free of substances which would impair bonding of setting materials to sub-floor surfaces, and are smooth and flat within tolerances specified in ANSI A137.1.
3. Verify that concrete sub-floor surfaces are ready for tile installation by testing for moisture emission rate and alkalinity; obtain instructions if test results are not within limits recommended by tile manufacturer and setting materials manufacturer.
4. Verify that required floor-mounted utilities are in correct location.

3.03 PREPARATION

A. Protection

1. Protect surrounding work from damage.

B. Surface Preparation

1. Remove any curing compounds or other contaminates.
2. Vacuum clean surfaces and damp clean.
3. Seal substrate surface cracks with filler. Level existing substrate surfaces to acceptable flatness tolerances.
4. Install cementitious backer board in accordance with ANSI A108.11 and board manufacturer's instructions. Tape joints and corners, cover with skim coat of dry-set mortar to a feather edge.
5. Prepare substrate surfaces for adhesive installation in accordance with adhesive manufacturer's instructions.

3.04 ERECTION

3.05 INSTALLATION

A. General

1. Install tile and grout in accordance with applicable requirements of ANSI A108.1 through A108.13, manufacturer's instructions, and TCA Handbook design numbers indicated on drawings.
2. Lay tile to pattern indicated. Arrange pattern so that a full tile or joint is centered on each wall and that no tile less than 1/2 width is used. Do not interrupt tile pattern through openings.
3. Cut and fit tile to penetrations through tile, leaving sealant joint space. Form corners and bases neatly. Align floor joints.
4. Place tile joints uniform in width, subject to variance in tolerance allowed in tile size. Make joints watertight, without voids, cracks, excess mortar, or excess grout.
5. Form internal angles square and external angles bullnosed.
6. Install ceramic accessories rigidly in prepared openings.
7. Install non-ceramic trim in accordance with manufacturer's instructions.
8. Install thresholds where indicated.
9. Sound tile after setting. Replace hollow sounding units.

10. Keep expansion joints free of adhesive or grout. Apply sealant to joints.
11. Allow tile to set for a minimum of 48 hours prior to grouting.
12. Grout tile joints. Use standard grout unless otherwise indicated.
13. Apply sealant to junction of tile and dissimilar materials and junction of dissimilar planes.

3.06 APPLICATION
3.07 CONSTRUCTION
3.08 REPAIR/RESTORATION
3.09 RE-INSTALLATION
3.10 FIELD QUALITY CONTROL
3.11 ADJUSTING
3.12 CLEANING
A. Clean tile and grout surfaces after installation is complete.

3.13 DEMONSTRATION
3.14 PROTECTION
A. Do not permit traffic over finished floor surface for 72 hours after installation.
B. Cover floors with Kraft paper and protect from dirt and residue from other trades.
C. Where floor will be exposed for prolonged periods cover with plywood or other similar type walkways

3.15 SCHEDULES

END OF SECTION

SECTION 09 51 13
ACOUSTICAL CEILINGS

PART 1 GENERAL

1.01 SUMMARY
- A. Section Includes
  1. Acoustical ceiling panels (Mineral Fiber, Lay-In) for exposed grid suspension systems.
  2. Acoustical ceiling panels (Mineral Fiber, Through Fastened) for exposed grid suspension systems.
- B. Products Supplied But Not Installed Under This Section
- C. Products Installed But Not Supplied Under This Section
- D. Related Sections
  1. 09 53 00 Acoustical Ceiling Suspension Assemblies
- E. Allowances
- F. Unit Prices
- G. Measurement Procedures
- H. Payment Procedures
- I. Alternates

1.02 REFERENCES
- A. ASTM C 423 Sound Absorption and Sound Absorption Coefficients by the Reverberation Room Method
- B. ASTM C 635 Standard Specification for Metal Suspension Systems for Acoustical Tile and Lay-in Panel Ceilings
- C. ASTM C 636 Recommended Practice for Installation of Metal Ceiling Suspension Systems for Acoustical Tile and Lay-in Panels
- D. ASTM D 3273 Standard Test Method for Resistance to Growth of Mold on the Surface of Interior Coatings in an Environmental Chamber
- E. ASTM E 84 Standard Test Method for Surface Burning Characteristics of Building Materials
- F. ASTM E 1264 Classification for Acoustical Ceiling Products
- G. ASTM E 1111 Standard Test Method for Measuring the Interzone Attenuation of Ceilings Systems
- H. ASTM E 1414 Standard Test Method for Airborne Sound Attenuation Between Rooms Sharing a Common Ceiling Plenum
- I. ASTM E 1264 Classification for Acoustical Ceiling Products
- J. CISCA Ceiling Systems Handbook, Current Edition

1.03 DEFINITIONS

1.04 SYSTEM DESCRIPTIONS

1.05 SUBMITTALS
- A. Product Data
  1. Submit manufacturer's technical data for each type of acoustical ceiling unit required.
- B. Shop Drawings
  1. Submit ceiling layout and details of acoustical ceilings show locations of items that are to be coordinated with, or supported by the ceilings.
- C. Samples
  1. Submit minimum 6-inch x 6-inch sample of specified acoustical panel.

D. Quality Assurance/Control Submittals
   1. Design Data, Test Reports, Certificates, Manufacturers' Instructions, Manufacturers' Field Reports, Qualification Statements
      a. Submit manufacturer's certifications that products comply with specified requirements, including laboratory reports showing compliance with specified tests and standards. For acoustical performance, each carton of material must carry an approved independent laboratory classification of NRC, CAC, and AC.

1.06 QUALITY ASSURANCE
A. Qualifications
   1. Provide acoustical panel units and grid components by a single manufacturer.
B. Regulatory Requirements
   1. Fire Performance Characteristics
      a. Identify acoustical ceiling components with appropriate markings of applicable testing and inspecting organization.
      b. Surface Burning Characteristics tested per ASTM E 84 and complying with ASTM E 1264 Classification.
      c. Fire Resistance tested per ASTM E119 and listed in the appropriate floor or roof design in the Underwriters Laboratories Fire Resistance Directory
   2. Acoustical Panels
      a. As with other architectural features located at the ceiling, may obstruct or skew the planned fire sprinkler water distribution pattern through possibly delay or accelerate the activation of the sprinkler or fire detection systems by channeling heat from a fire either toward or away from the device. Designers and installers are advised to consult a fire protection engineer, NFPA 13, for guidance where automatic fire detection and suppression systems are present.
   3. Install in accordance with ICC-ES ESR-1308 (Armstrong)
   4. Install in accordance with DSA IR 25-2.19.

1.07 DELIVERY, STORAGE, AND HANDLING
A. Packing, Shipping, Handling, and Unloading
   1. Deliver acoustical ceiling units to project site in original, unopened packages and store them in a fully enclosed space where they will be protected against damage from moisture, direct sunlight, surface contamination, and other causes.
   2. Before installing acoustical ceiling units, permit them to reach room temperature and a stabilized moisture content.
   3. Handle acoustical ceiling units carefully to avoid chipping edges or damaged units in any way.

1.08 PROJECT CONDITIONS
1.09 SEQUENCING
A. Coordinate acoustical ceiling work with installers of related work including, but not limited to building insulation, gypsum board, light fixtures, mechanical systems, electrical systems, and sprinklers.

1.10 SCHEDULING
1.11 WARRANTY
1.12 SYSTEM STARTUP
1.13 OWNER'S INSTRUCTIONS
1.14 COMMISSIONING
1.15 MAINTENANCE
- A. Extra Materials
  - 1. Deliver extra materials to Owner.
  - 2. Furnish extra materials described below that match products installed. Packaged with protective covering for storage and identified with appropriate labels.
    - a. Acoustical Ceiling Units: Furnish quality of full-size units equal to 5.0 percent of amount installed.

PART 2 PRODUCTS

2.01 MANUFACTURERS
- A. Armstrong World Industries, P.O. Box 3001 Lancaster, PA 17604, or equal.

2.02 EXISTING PRODUCTS
2.03 MATERIALS
- A. Mineral Fiber Panel (Lay-In Panel)
  - 1. (Armstrong) CIRRUS Second Look III Panel
    - a. Size: 24-inch x 48-inch x 3/4-inch
    - b. Edge: 15/16-inch Angled Tegular
    - c. Panel Color: White
    - d. Max lbs./SF: 0.75
    - e. Flame Spread/Smoke Developed Index: Class A
- B. Mineral Fiber Panel (Through Fastened Attached)
  - 1. (Armstrong) CAPZ Optima Panel
    - a. Size: 24-inch x 48-inch x 7/8-inch
    - b. Edge: Reverse Tegular
    - c. Panel Color: White
    - d. Max lbs./SF: 0.56
    - e. Anchorage: Uptight Clip Installation with Cap
      - 1. ARSTUD
      - 2. ARCAP
        - a. Finish: Match panel
    - f. Flame Spread/Smoke Developed Index: Class A

2.04 MANUFACTURED UNITS
2.05 EQUIPMENT
2.06 COMPONENTS
2.07 ACCESSORIES
2.08 MIXES
2.09 FABRICATION
2.10 FINISHES
2.11 SOURCE QUALITY CONTROL

PART 3 EXECUTION

3.01 INSTALLERS

3.02 EXAMINATION

A. Site Verification of Conditions

1. Do not proceed with installation until all wet work such as concrete, terrazzo, plastering and painting has been completed and thoroughly dried out, unless expressly permitted by manufacturer's printed recommendations.

3.03 PREPARATION

A. Measure each ceiling area and establish layout of acoustical units to balance border widths at opposite edges of each ceiling. Avoid use of less than half width units at borders, and comply with reflected ceiling plans. Coordinate panel layout with mechanical and electrical fixtures.

3.04 ERECTION

3.05 INSTALLATION

A. Follow manufacturer installation instructions.

B. Install in accordance with ICC-ESR report.

C. Install panels in accordance with the manufacturer's instructions, and in compliance with ASTM C 636 and with the authorities having jurisdiction.

D. For reveal edge panels: Cut and reveal or rabbet edges of ceiling panels at border areas and vertical surfaces.

E. Install acoustical panels in coordination with suspended system, with edges resting on flanges of main runner and cross tees. Cut and fit panels neatly against abutting surfaces. Support edges by wall moldings.

3.06 APPLICATION

3.07 CONSTRUCTION

3.08 REPAIR/RESTORATION

A. Replace damaged and broken panels.

3.09 RE-INSTALLATION

3.10 FIELD QUALITY CONTROL

3.11 ADJUSTING

3.12 CLEANING

A. Clean exposed surfaces of acoustical ceilings, including trim, edge moldings, and suspension members. Comply with manufacturer's instructions for cleaning and touch up of minor finish damage. Remove any ceiling products that cannot be successfully cleaned and or repaired. Replace with attic stock or new product to eliminate evidence of damage.

3.13 DEMONSTRATION

3.14 PROTECTION

3.15 SCHEDULES

END OF SECTION

SECTION 09 53 00
ACOUSTICAL CEILING SUSPENSION ASSEMBLIES

PART 1 GENERAL

1.01 SUMMARY
- A. Section Includes
  1. Exposed grid suspension system
  2. Wire hangers, fasteners, main runners, cross tees, and wall angle moldings
- B. Products Supplied But Not Installed Under This Section
- C. Products Installed But Not Supplied Under This Section
- D. Related Sections
  1. 09 51 13 Acoustical Ceilings
- E. Allowances
- F. Unit Prices
- G. Measurement Procedures
- H. Payment Procedures
- I. Alternates

1.02 REFERENCES
- A. ASTM A 1008 Standard Specification for Steel, Sheet, Cold Rolled, Carbon, Structural, High-Strength Low-Alloy and High-Strength Low-Alloy with Improved Formability
- B. ASTM A 641 Standard Specification for Zinc-Coated (Galvanized) Carbon Steel Wire
- C. ASTM A 653 Standard Specification for Steel Sheet, Zinc-Coated (Galvanized) by the Hot-Dip Process
- D. ASTM C 423 Sound Absorption and Sound Absorption Coefficients by the Reverberation Room Method
- E. ASTM C 635 Standard Specification for Metal Suspension Systems for Acoustical Tile and Lay-in Panel Ceilings
- F. ASTM C 636 Recommended Practice for Installation of Metal Ceiling Suspension Systems for Acoustical Tile and Lay-in Panels
- G. ASTM D 3273 Standard Test Method for Resistance to Growth of Mold on the Surface of Interior Coatings in an Environmental Chamber
- H. ASTM E 84 Standard Test Method for Surface Burning Characteristics of Building Materials
- I. ASTM E 1264 Classification for Acoustical Ceiling Products
- J. CISCA Ceiling Systems Handbook, Current Edition

1.03 DEFINITIONS

1.04 SYSTEM DESCRIPTIONS

1.05 SUBMITTALS
- A. Product Data
  1. Submit manufacturer's technical data for each type of suspension system required.
- B. Shop Drawings
  1. Submit ceiling layout and details of acoustical ceilings show locations of items that are to be coordinated with, or supported by the ceilings.
- C. Samples

1. Submit minimum 8-inch long samples of exposed wall molding and suspension system, including main runner and 4 foot cross tees.

D. Quality Assurance/Control Submittals

1. Design Data, Test Reports, Certificates, Manufacturers' Instructions, Manufacturers' Field Reports, Qualification Statements

a. Submit manufacturer's certifications that products comply with specified requirements, including laboratory reports showing compliance with specified tests and standards. For acoustical performance, each carton of material must carry an approved independent laboratory classification of NRC, CAC, and AC.

1.06 QUALITY ASSURANCE

A. Qualifications

1. Provide acoustical panel units and grid components by a single manufacturer.

B. Regulatory Requirements

1. Fire Performance Characteristics

a. Identify acoustical ceiling components with appropriate markings of applicable testing and inspecting organization.

b. Surface Burning Characteristics tested per ASTM E 84 and complying with ASTM E 1264 Classification.

c. Provide products that comply with the following limits for surface burning characteristics when tested per ASTM E84

1. Flame spread: 25 maximum
2. Smoke developed: 450 maximum

d. Fire Resistance tested per ASTM E119 and listed in the appropriate floor or roof design in the Underwriters Laboratories Fire Resistance Directory

2. Install in accordance with ICC-ES ESR-1308 (Armstrong)
3. Install in accordance with DSA IR 25-2.19.

1.07 DELIVERY, STORAGE, AND HANDLING

A. Packing, Shipping, Handling, and Unloading

1. Deliver acoustical ceiling units to project site in original, unopened packages and store them in a fully enclosed space where they will be protected against damage from moisture, direct sunlight, surface contamination, and other causes.
2. Handle acoustical ceiling units carefully to avoid chipping edges or damaged units in any way.

1.08 PROJECT CONDITIONS

1.09 SEQUENCING

A. Coordinate acoustical ceiling work with installers of related work including, but not limited to building insulation, gypsum board, light fixtures, mechanical systems, electrical systems, and sprinklers.

1.10 SCHEDULING

1.11 WARRANTY

1.12 SYSTEM STARTUP

1.13 OWNER'S INSTRUCTIONS

1.14 COMMISSIONING

1.15 MAINTENANCE
- A. Extra Materials
  - 1. Deliver extra materials to Owner.
  - 2. Furnish extra materials described below that match products installed. Packaged with protective covering for storage and identified with appropriate labels.
    - a. Exposed Suspension System Components: Furnish quantity of each exposed suspension component equal to 2.0 percent of amount installed.

PART 2 PRODUCTS

2.01 MANUFACTURERS
- A. Armstrong World Industries, P.O. Box 3001 Lancaster, PA 17604, or Equal.

2.02 EXISTING PRODUCTS

2.03 MATERIALS
- A. Suspension System
  - 1. (Armstrong) Prelude XL 15/16" Exposed Tee Heavy Duty
    - a. Grid Size: 24-inch x 48-inch

2.04 MANUFACTURED UNITS

2.05 EQUIPMENT

2.06 COMPONENTS

2.07 ACCESSORIES
- A. Wire for Hangers and Ties
  - 1. ASTM A 641, Class 1 zinc coating, soft annealed, with a yield stress load of at least time three design load, but not less than 12-gauge.
- B. Edge Moldings and Trim
  - 1. 7/8-in x 7/8-in
- C. Beam End Retaining Clip
  - 1. BERC-2 wall attachment clips per ICC ESR-1308
- D. Adapter Clips (Through Fastened Panels)
  - 1. STAC (Single Tee Adapter Clip)

2.08 MIXES

2.09 FABRICATION

2.10 FINISHES
- A. Shop Priming, Shop Finishing
  - 1. Suspension System
    - a. Finish: Exposed surfaces chemically cleansed, capping prefinished galvanized steel in baked polyester paint.
    - b. Color at Mineral Fiber Panels: As selected by architect from manufacturer's 'Premium' colors.
    - d. Color at Mineral Fiber Panels (Through Fastened): As selected by architect from manufacturer's 'Premium' colors.
  - 2. Edge Moldings and Trim
    - a. Match suspension system color/finish.

2.11 SOURCE QUALITY CONTROL

PART 3 EXECUTION

3.01 INSTALLERS

3.02 EXAMINATION

A. Site Verification of Conditions

1. Do not proceed with installation until all wet work such as concrete, terrazzo, plastering and painting has been completed and thoroughly dried out, unless expressly permitted by manufacturer's printed recommendations.

3.03 PREPARATION

A. Measure each ceiling area and establish layout of acoustical units to balance border widths at opposite edges of each ceiling. Avoid use of less than half width units at borders, and comply with reflected ceiling plans. Coordinate panel layout with mechanical and electrical fixtures.

3.04 ERECTION

3.05 INSTALLATION

A. Follow manufacturer installation instructions.

B. Install suspension system and panels in accordance with the manufacturer's instructions, and in compliance with ASTM C 636 and with the authorities having jurisdiction.

C. Suspend main beam from overhead construction with hanger wires spaced along the length of the main runner. Install hanger wires plumb and straight.

D. Install wall moldings at intersection of suspended ceiling and vertical surfaces. Miter corners where wall moldings intersect or install corner caps.

E. For reveal edge panels: Cut and reveal or rabbet edges of ceiling panels at border areas and vertical surfaces.

F. Install acoustical panels in coordination with suspended system, with edges resting on flanges of main runner and cross tees. Cut and fit panels neatly against abutting surfaces. Support edges by wall moldings.

3.06 APPLICATION

3.07 CONSTRUCTION

3.08 REPAIR/RESTORATION

A. Replace damaged and broken components.

3.09 RE-INSTALLATION

3.10 FIELD QUALITY CONTROL

3.11 ADJUSTING

3.12 CLEANING

A. Clean exposed surfaces of acoustical ceilings, including trim, edge moldings, and suspension members. Comply with manufacturer's instructions for cleaning and touch up of minor finish damage. Remove any ceiling products that cannot be successfully cleaned and or repaired. Replace with attic stock or new product to eliminate evidence of damage.

3.13 DEMONSTRATION

3.14 PROTECTION

3.15 SCHEDULES

END OF SECTION

SECTION 09 65 13
RESILIENT BASE AND ACCESSORIES

PART 1 - GENERAL

1.01 SUMMARY
- A. Section Includes
  - 1. Resilient wall base and resilient accessories as shown on the drawings, schedules, and as indicated by the requirements of this section.
- B. Products Supplied But Not Installed Under This Section
- C. Products Installed But Not Supplied Under This Section
- D. Related Sections
- E. Allowances
- F. Unit Prices
- G. Measurement Procedures
- H. Payment Procedures
- I. Alternates

1.02 REFERENCES
- A. ASTM E648 Flooring Radiant Panel Test
- B. ASTM E662 Optical Density of Smoke

1.03 DEFINITIONS

1.04 SYSTEM DESCRIPTIONS

1.05 SUBMITTALS
- A. Product Data
  - 1. Submit manufacturer's technical data
- B. Shop Drawings
  - 1. Submit manufacturer’s coving details
- C. Samples
  - 1. Submit manufacturer's standard samples showing all available colors
- D. Quality Assurance/Control Submittals
  - 1. Submit installation and maintenance instructions.

1.06 QUALITY ASSURANCE
- A. Qualifications
  - 1. Select an installer who is competent in the installation of resilient base and accessories.
  - 2. Provide types of accessories supplied by one manufacturer, including leveling and patching compounds, and adhesives.
- B. Regulatory Requirements
  - 1. Material to meet the following fire test performance criteria as tested by a recognized independent testing laboratory:
    - a. ASTM E 648 Critical Radiant Flux of 0.45 watts per sq. cm. or greater, Class I.
    - b. ASTM E 662 (Smoke Generation) Maximum Specific Optical Density of 450 or less.
- C. Certifications
  - 1. Material shall meet at least one of the following:
    - a. Certified under the Resilient Floor Covering Institute (RFCI) FloorScore program.

b. Compliant with the VOC-emission limits and testing requirements specified in the California Department of Public Health 2010 Standard Method for the Testing and Evaluation Chambers, Version 1.1, February 2010

c. Products certified under the UL GREENGUARD Gold program

D. Field Samples

1. Provide sample of inside corner, outside corner, and field seam within each building for review by architect. Sample will be the standard for installation quality and establish the standard for installation quality control.

1.07 DELIVERY, STORAGE, AND HANDLING

A. Packing, Shipping, Handling, and Unloading

1. Deliver materials in new condition to the jobsite in the manufacturer's original unopened containers that bear the name and brand of the manufacturer, project identification, and shipping and handling instructions.

B. Storage and Protection

1. Store materials in a clean, dry, enclosed space off the ground, and protected from the weather and from extremes of heat and cold. Protect adhesives from freezing. Store base, adhesives and accessories in the spaces where they will be installed for at least 48 hours before beginning installation.

1.08 PROJECT CONDITIONS

A. Project Environmental Requirements

1. Maintain a minimum temperature in the spaces to receive the base and accessories of 65°F and a maximum temperature of 100°F for at least 48 hours before, during, and for not less than 48 hours after installation. Thereafter, maintain a minimum temperature of 55°F in areas where work is completed. Protect all materials from the direct flow of heat from hot-air registers, radiators, or other heating fixtures and appliances.

2. Install base and accessories after the other finishing operations, including painting, have been completed. Close spaces to traffic during the installation of the base. Do not install base over walls until they are sufficiently dry to achieve a bond with the adhesive, in accordance with the manufacturer's recommended bond and moisture tests.

1.09 SEQUENCING

1.10 SCHEDULING

1.11 WARRANTY

1.12 SYSTEM STARTUP

1.13 OWNER'S INSTRUCTIONS

1.14 COMMISSIONING

1.15 MAINTENANCE

A. Extra Materials

1. Provide 5% extra material in unopened boxes.

PART 2 - PRODUCTS

2.01 MANUFACTURERS
- A. Burke Flooring, 2250 South Tenth Street, San Jose, CA 95112, or Equal.
- B. Roppe Corporation, USA, 1602 North Union Street, Fostoria, OH 44830

2.02 EXISTING PRODUCTS

2.03 MATERIALS
- A. (Burke) BurkeBase Rubber Wall Base Type TS Commercial Wall Base
  1. 4" Tall, 1/8" Thick,
  2. Standard Toe
  3. Color: Full Range of standard Colors
- B. (Roppe) Pinnacle Rubber Base
  1. 4" Tall, 1/8" Thick,
  2. Standard Toe
  3. Color: Full Range of standard Colors

2.04 MANUFACTURED UNITS

2.05 EQUIPMENT

2.06 COMPONENTS

2.07 ACCESSORIES
- A. Corners, Inside and Outside corners
  1. Provide Inside Corners and Outside Corners with 3" wings to match resilient base profile and color
  2. Continuous wrapping of resilient rubber wall base around transitions will not be accepted.
- B. Stair Stringers
  1. Provide matching stringer base, field cut to scribe treads and risers
- C. Moldings, Transitions, and Nosing
  1. Match resilient base manufacturer and color selections.
- D. Adhesives
  1. Porous Surfaces:
     a. Application: 1/8" square notched trowel or multi-tipped nozzle when using the cartridge.
     b. Coverage: 250 lin. ft. using the trowel or 65 lin. ft. per cartridge when installing 4" wall base.
     c. (Burke) BR-101 Acrylic Cove Base Adhesive
     d. (Roppe) 1100 Wall Base Adhesive
  2. Non-porous Surfaces:
     a. Use a good quality contact bond adhesive/contact cement and apply per manufacturer's instructions.

2.08 MIXES

2.09 FABRICATION

2.10 FINISHES

2.11 SOURCE QUALITY CONTROL

PART 3 - EXECUTION

2.01 INSTALLERS

3.02 EXAMINATION
- A. Site Verification of Conditions
  1. Areas to receive resilient wall base shall be clean, fully enclosed, weather-tight, and maintained at a uniform temperature of at least 65°F for 24 hours before, during, and after the installation is

completed. The resilient wall base and adhesives shall be conditioned in the same manner.

2. The wall surface shall be clean, dry and free of all foreign material, such as dust, paint, grease, oils, solvents, sealers, and old adhesive residue which may interfere with proper adhesion.

3.03 PREPARATION

A. Protection

B. Surface Preparation

1. Resilient wall base may be installed on interior plaster, gypsum wallboard, concrete, masonry, cement board and similar porous surfaces. Do not install on exterior surfaces subject to weather or interior surfaces which will be exposed to moisture or excessive temperature changes.

3.04 ERECTION

3.05 INSTALLATION

A. Install per manufacturer's instructions.

B. The installation of shall not begin until the work of all other trades has been completed, especially overhead trades.

C. All coiled wall base shall be unrolled and allowed to lay flat for a period of at least 24 hours at 65°F prior to installation.

D. Resilient wall base shall be rolled, with a J-hand roller, after installation, to ensure proper bonding.

3.06 APPLICATION

3.07 CONSTRUCTION

3.08 REPAIR/RESTORATION

3.09 RE-INSTALLATION

3.10 FIELD QUALITY CONTROL

3.11 ADJUSTING

3.12 CLEANING

3.13 DEMONSTRATION

3.14 PROTECTION

3.15 SCHEDULES

END OF SECTION

SECTION 09 67 72
RESINOUS FLOORING

PART 1 GENERAL

1.01 SUMMARY
- A. Section Includes
  - 1. The work includes, but is not limited to, providing all materials, labor, equipment and transportation to provide an epoxy resinous flooring system complete as indicated and as specified herein.
    - a. Surface preparation
    - b. Primer
    - c. Base coat
    - d. Cover base
    - e. Finish coat
- B. Products Supplied But Not Installed Under This Section
- C. Products Installed But Not Supplied Under This Section
- D. Related Sections
  - 1. 03 30 00 Cast-In-Place Concrete
- E. Allowances
- F. Unit Prices
- G. Measurement Procedures
- H. Payment Procedures
- I. Alternates

1.02 REFERENCES
- A. ASTM D2047: Standard Test Method for Static Coefficient of Friction of Polish-Coated Floor Surfaces as measured by the James Machine.
- B. ASTM F1869: Standard Test Method for Measuring Moisture Vapor Emission Rate of Concrete Subfloor Using Anhydrous Calcium Chloride.
- C. ASTM F2170: Standard Test Method for Determining Relative Humidity in Concrete Floor Slabs Using in situ Probes.

1.03 DEFINITIONS

1.04 SYSTEM DESCRIPTIONS

1.05 SUBMITTALS
- A. Product Data
  - 1. Submit manufacturers product data for materials specified.
- B. Shop Drawings
  - 1. Submit manufacturers standard horizontal to vertical transition details.
- C. Samples
  - 1. Submit manufacturers sample boards indicating full range of standard colors.
  - 2. Submit manufacturers sample boards indicating full range of surface textures.
- D. Quality Assurance/Control Submittals
  - 1. Design Data, Test Reports, Certificates, Manufacturers' Instructions, Manufacturers' Field Reports, Qualification Statements
    - a. Submit manufacturer's subfloor preparation guidelines.
    - b. Submit manufacturer's technical memorandums or technical bulletins regarding installation procedures.

c. Submit manufacturer's installation guidelines.
d. Submit manufacturer's standard warranty.

E. Closeout Submittals
1. Submit test results of ASTM F2170: Standard Test Method for Determining Relative Humidity in Concrete Floor Slabs Using in situ Probes.
2. Submit test results of ASTM F1869-11 Standard Test Method for Measuring Moisture Vapor Emission Rate of Concrete Subfloor Using Anhydrous Calcium Chloride.
3. Submit manufacturer's current maintenance guidelines

1.06 QUALITY ASSURANCE
A. Qualifications
1. Applicator shall have minimum of five (5) years-experience in application of the specified type of flooring.
2. Applicator shall have certification from the specified manufacturer that the applicator is approved for installation of the flooring.
B. Regulatory Requirements
1. Resinous flooring shall be stable, firm, and slip resistant. **CBC Section 11B-302.1.**
2. Flooring shall have a static coefficient of not less than 0.5, as measured by ASTM D2047.
C. Certifications
D. Field Samples
E. Mock-ups
F. Pre-installation Meetings

1.07 DELIVERY, STORAGE, AND HANDLING
A. Packing, Shipping, Handling, and Unloading
1. Deliver all material in manufacturers sealed containers.
B. Acceptance at Site
C. Storage and Protection
1. Store materials under cover in a well-ventilated area.
D. Waste Management and Disposal

1.08 PROJECT CONDITIONS
1.09 SEQUENCING
1.10 SCHEDULING
1.11 WARRANTY
A. Provide one (1) year guarantee for material and installation.

1.12 SYSTEM STARTUP
1.13 OWNER'S INSTRUCTIONS
1.14 COMMISSIONING
1.15 MAINTENANCE

PART 2 PRODUCTS

2.01 MANUFACTURERS
A. Resinous Flooring
1. Sunbelt Flooring, Inc., 14251 Fern Ave., Chino, CA 91710, or equal.

2.02 EXISTING PRODUCTS

2.03 MATERIALS

A. (Sunbelt) Sunbelt 1100 Resinous Flooring

1. Thickness: 1/4-inch
2. Color: As selected by Architect from manufacturers full range of standard colors
3. Surface Texture: As selected by Architect from manufacturers full range of options.

2.04 MANUFACTURED UNITS
2.05 EQUIPMENT
2.06 COMPONENTS
2.07 ACCESSORIES
2.08 MIXES
2.09 FABRICATION
2.10 FINISHES
2.11 SOURCE QUALITY CONTROL

PART 3 EXECUTION

3.01 INSTALLERS
3.02 EXAMINATION

A. Site Verification of Conditions

1. Installation shall be carried out no sooner than the specified curing time of concrete subfloor (normal density concrete curing time is approximately 28 days for development of design strength). Refer to current version of ASTM F710.
2. Ensure that no concrete sealers or curing compounds have been applied to or mixed into the concrete
3. Subfloor surface must be free of any paint, wax, oil, grease, sealer, curing compound, solvent or any other contaminants that may inhibit bond. All contaminants must be removed from the surface via mechanical abatement.
4. Smooth, dense finish, highly compacted with a tolerance of 1/8'' in a 10 ft radius.
5. Moisture and alkalinity tests must be performed on all concrete substrates, under in-service conditions. It is recommended to turn on the HVAC unit prior to performing moisture testing, in order to ensure stable testing conditions and accurate results. The concrete's surface pH should be between 7 and 10. Relative humidity of the concrete slab must not exceed the tolerance allowed by the resinous flooring manufacturer, in accordance with ASTM F2170 (in situ probes). Moisture vapor emissions from the concrete slab must not exceed the tolerance allowed by the resinous flooring manufacturer, in accordance with ASTM F1869 (anhydrous calcium chloride).
6. Advise other trades of finished, fixtures and fittings not to be installed until flooring is cured, such as: Painting, floor supported equipment, caulking, plumbing fixtures, etc.
7. All cracks, holes broken, and crumbling areas must first be cut out, cleaned and repaired.
8. Moving of settling cracks shall be cut or routed out and filled with aerosol and epoxy paste, then reinforced with fiberglass tape.

9. Building shall be encased with roof, walls, windows and doors prior to floor installation. Exceptions shall be agreed upon, in writing, by flooring installer.

3.03 PREPARATION
- A. Protection
- B. Surface Preparation
  - 1. Concrete Subfloor
    - a. Vacuum shot blast ("Blastrac") all designated existing interior concrete floor slabs that are to receive new flooring materials or leveling underlayment coating.
    - b. Vacuum shot blasting shall be with steel pellets for optimum surface profile in order for all sealers or adhesives to penetrate and bond.
    - c. Coordinate all vacuum shot blasting with respective floor covering contractor. Dustless diamond cup grinding may be used in some instances in lieu of shot blasting.

3.04 ERECTION

3.05 INSTALLATION

3.06 APPLICATION
- A. Comply with manufacturer's instructions and recommendations.
- B. Mix flooring liquids with manufacturers approved equipment.
- C. Trowel apply self-priming epoxy for the first build coat.
- D. Broadcast quartz into epoxy.
- E. After the first build coat is cured, sweep all loose aggregate.
- F. Apply finish coat with trowels to a tight flat surface.
- G. If a skid resistant surface is required by Architect or indicated on drawings, non-skid aggregates shall be broadcast onto surface of finish coat, then back rolled for sealing.

3.07 CONSTRUCTION

3.08 REPAIR/RESTORATION

3.09 RE-INSTALLATION

3.10 FIELD QUALITY CONTROL

3.11 ADJUSTING

3.12 CLEANING

3.13 DEMONSTRATION

3.14 PROTECTION
- A. Allow to cure thoroughly before opening floor to normal use.
- B. Use of heating equipment is suggested if the seal coat cannot be given more than twelve hours of curing time before normal use.
- C. Supply barricades and precautions to allow traffic after and during start of installation, and for the cure period of the final coat.

3.15 SCHEDULES

END OF SECTION

SECTION 09 72 00
PRESENTATION DRY ERASE WALLCOVERING

PART 1 GENERAL

1.01 SUMMARY
- A. Section Includes
  - 1. Magnetic receptive dry erase wallcovering
  - 2. Accessories
- B. Products Supplied But Not Installed Under This Section
- C. Products Installed But Not Supplied Under This Section
- D. Related Sections
  - 1. 09 29 00 Gypsum Board
- E. Allowances
- F. Unit Prices
- G. Measurement Procedures
- H. Payment Procedures
- I. Alternates

1.02 REFERENCES
- A. ASTM E84 Test Method for Surface Burning Characteristics of Building Materials
- B. Gypsum Association GA-214-M-97 Recommended Levels of Gypsum Board Finish

1.03 DEFINITIONS

1.04 SYSTEM DESCRIPTIONS

1.05 SUBMITTALS
- A. Product Data
  - 1. Manufacturer's product data and installation instructions for each type of dry erase wallcovering, adhesive, and accessories required.
- B. Shop Drawings
- C. Samples
  - 1. 7 inch x 9 inch samples of each dry erase material specified.
  - 2. 6 inch samples of trim, tray, and end caps specified.
- D. Quality Assurance/Control Submittals
  - 1. Design Data, Test Reports, Certificates, Manufacturers' Instructions, Manufacturers' Field Reports, Qualification Statements
    - a. Manufacturer's written product data indicating compliance with specified materials required.
    - b. Manufacturer's written installation instructions.
    - c. Manufacturer's written instructions for recommended maintenance of each type of dry erase wall covering required.
- E. Closeout Submittals
  - 1. Maintenance instructions: Include precautions against cleaning materials and methods that may be detrimental to finishes and performance.

1.06 QUALITY ASSURANCE

A. Qualifications
   1. Provide each type of dry erase wallcovering required produced by one manufacturer.
   2. Installation by skilled commercial wallcovering contractor with no less than three years of documented experience installing dry erase wallcovering of the types and extent required.
B. Regulatory Requirements
   1. Provide materials that meet Class I/A rating when tested in accordance with ASTM E84 for flame spread and smoke developed
C. Certifications
D. Field Samples
   1. Prepare field samples for architect's review and establish requirements for seaming and finish trim.
      1. Install sample panel of each type presentation wallcovering specified in area designated by architect.
      2. Maintain corrected and approved samples to serve as a standard of performance for the project.

1.07 DELIVERY, STORAGE, AND HANDLING
A. Packing, Shipping, Handling, and Unloading
   1. Deliver presentation wallcoverings to the project site in unbroken and undamaged original factory packaging and clearly labeled with the manufacturer's identification label, quality or grade, and lot number.
B. Acceptance at Site
C. Storage and Protection
   1. Store materials in a clean, dry storage area with temperature maintained above 55°F with normal humidity.
   2. Store material within original packaging to prevent damage.

1.08 PROJECT CONDITIONS
A. Project Environmental Requirements
   1. Do not apply presentation wallcoverings when surface and ambient temperatures are outside the temperature ranges required by the wallcovering manufacturer.
   2. Provide continuous ventilation and heating facilities to maintain substrate surface and ambient temperatures above 55°F unless required otherwise by manufacturer's instructions.
   3. Apply adhesive when substrate surface temperature and ambient temperature is above 55°F and relative humidity is below forty percent.
   4. Maintain constant recommended temperature and humidity for at least 72 hours prior to and throughout the installation period, and for 72 hours after wallcovering installation completion.
   5. Provide not less than 80-foot-candles per square foot lighting level measured mid-height at substrate surfaces.

1.09 SEQUENCING
1.10 SCHEDULING
1.11 WARRANTY
1.12 SYSTEM STARTUP
1.13 OWNER'S INSTRUCTIONS
1.14 COMMISSIONING

1.15 MAINTENANCE

PART 2 PRODUCTS

2.01 MANUFACTURERS
1. Koroseal Interior Products, 3875 Embassy Parkway, Suite 110, Fairlawn, OH 44333 or Equal.

2.02 EXISTING PRODUCTS
2.03 MATERIALS
A. Presentation Dry Erase Wallcovering
1. (Koroseal) Walltalkers Magrite, M248
a. Surface Gloss: Semi-gloss
b. 48 inch width sheets, woven backing.
B. Marker Caddy
1. Model: AMCM, Aluminum Marker Caddy
2. Finish: As selected by architect
3. Mounting: Magnetic Mounting

2.04 MANUFACTURED UNITS
2.05 EQUIPMENT
2.06 COMPONENTS
2.07 ACCESSORIES
A. Adhesives: Heavy-duty clear or clay based premixed vinyl adhesive.
B. Substrate Primer/Sealer: White pigmented acrylic base primer/sealer specifically formulated for use with vinyl wallcoverings.
C. Presentation Starter Kit: Provide one starter kit containing eight dry erase markers, one eraser, two dry erase cleaning cloths, one empty bottle for water, and one 8 ounce bottle liquid surface cleaning solution for each room installed with dry erase wallcovering.
D. Magnets: Heavy duty magnets - black.

2.08 MIXES
2.09 FABRICATION
2.10 FINISHES
2.11 SOURCE QUALITY CONTROL

PART 3 EXECUTION

3.01 INSTALLERS
3.02 EXAMINATION
A. Site Verification of Conditions
1. Examine substrates and installation conditions to ensure surface conditions meet or exceed a Level 4 finish, per GA-214-M-97: Recommended Levels of Gypsum Board Finish, and permanent lighting is installed and operational.
2. Test substrate with suitable moisture meter and verify that moisture content does not exceed four percent.
3. Verify substrate surface is clean, dry, smooth, structurally sound, and free from surface defects and imperfections that would show through the finished surface.

4. Evaluate all painted surfaces for the possibility of pigment bleed-through.
5. Notify the contractor and architect in writing of any conditions detrimental to the proper and timely completion of the installation.
6. Beginning of installation means acceptance of surface conditions.

3.03 PREPARATION

3.04 ERECTION

3.05 INSTALLATION

A. Acclimate wallcovering in the area of installation a minimum of 24 hours before installation.
B. Read and follow the manufacturer's installation instruction sheet contained in each roll of the dry erase wallcovering.
C. Examine all materials for pattern, color, quantity and quality, as specified for the correct location prior to cutting.
D. Primer: Use a quality pigmented acrylic wallcovering primer.
E. Adhesive: Apply a uniform coat of heavy-duty pre-mixed clay-based or extra strength clear wallcovering adhesive.
F. Install each strip horizontally and in the same sequence as cut from the roll.
G. Install dry erase wallcovering sheets in exact order as they are cut from bolt. Reverse hang alternate strips (except lined products). Do not crease or bend the wallcovering when handling.
H. Install dry erase wallcovering horizontally using a level line.
I. Using a level or straight edge, double cut the seam with a seam-cutting tool (Ex: Double Seam-Cutter or Swedish Knife). Do not score gypsum board when cutting material.
J. When covering the entire wall, seam the material out of the main writing and viewing areas of the wall.
K. Apply wallcovering to the substrate using a wallcovering smoother, wrapped with a soft cloth, to remove air bubbles. Do not use sharp edged smoothing tools. Smooth material on the wall from the middle to the outside edge.
L. Remove excess adhesive immediately after the wallcovering is applied. Clean entire surface with a warm mild soap solution, and clean soft cloths. Rinse thoroughly with water and let dry before using. Change water often to maintain water clarity.
M. Stop installation of material that is questionable in appearance and notify the manufacturer's representative for an inspection.

3.06 APPLICATION

3.07 CONSTRUCTION

3.08 REPAIR/RESTORATION

3.09 RE-INSTALLATION

3.10 FIELD QUALITY CONTROL

3.11 ADJUSTING

3.12 CLEANING

A. Upon completion of installation, remove all exposed adhesive immediately using a soft cloth and a warm, mild soap solution and rinse thoroughly with water and dry with clean towel prior to using.
B. Upon completion of the work, remove surplus materials, rubbish, and debris resulting from the wallcovering installation. Leave areas in neat, clean, and orderly condition.

3.13 DEMONSTRATION
3.14 PROTECTION
3.15 SCHEDULES

END OF SECTION

SECTION 09 91 13
EXTERIOR PAINTING

PART 1 - GENERAL

1.01 SUMMARY
- A. Section Includes
  1. Block Fillers
  2. Primers
  3. Exterior Paints
- B. Products Supplied But Not Installed Under This Section
- C. Products Installed But Not Supplied Under This Section
- D. Related Sections
  1. 05 12 00 Structural Steel Framing
  2. 07 19 00 Water Repellents
  3. 09 91 23 Interior Painting
- E. Allowances
- F. Unit Prices
- G. Measurement Procedures
- H. Payment Procedures
- I. Alternates

1.02 REFERENCES
- A. C.C.R., Title 24, Part 11, 2019,5.504.4.3 Paints and Coatings

1.03 DEFINITIONS
- A. Blocking: Two painted surfaces sticking together such as a painted door sticking to a painted jamb.
- B. Bio-Pruf: Biostabilizing additive, to protect products from premature microbial degradation.
- C. EG: Ethylene Glycol. Ethylene glycol is listed as a hazardous air pollutant (HAP) by the U.S. EPA.
- D. EPR: Environmental Performance Rating. Master Painters Institute (MPI) formula that relates to VOC, Performance of Category, Gloss and Appropriate specified use. Higher values equate to greater eco-efficiency.
- E. MPI: Master Painters Institute. Organization that establishes architectural paint standards and quality assurance programs in North America. www.paintinfo.com.
- F. PDCA: Painting & Decorating Contractors of America. www.pdca.org.
- G. RAVOC: Reactivity adjusted VOC. "Reactivity" means the ability of a VOC to promote ozone formation
- H. SSPC: The Society for Protective Coatings publishes Scopes of SSPC Surface Preparation Standards and Specifications. www.sspc.org.

1.04 SYSTEM DESCRIPTIONS

1.05 SUBMITTALS
- A. Product Data
  1. Submit product data for each type of product. Include preparation requirements and application instructions.
- B. Shop Drawings
- C. Samples
  1. Submit samples for initial selection

2. Submit samples for verification that in each color and gloss topcoat.
    a. Submit samples on rigid backing, no smaller than 7" x 10" or larger than 8.5" x 11"
    b. Label each sample for project, architect, contractor, paint color name and number, and paint brand

D. Quality Assurance/Control Submittals
1. Design data, Test Reports, Certificates, Manufactures' Instructions, Manufactures' Field Reports, Qualification Statements
    a. Printed statement of VOC Content
    b. Documentation indicating the paints and coatings meet the testing and product requirements of the California Department of Health Services' "Standard Practice for the Testing of Volatile Organic Emissions from Various Sources Using Small-Scale Environmental Chambers."

E. Closeout Submittals

1.06 QUALITY ASSURANCE

A. Qualifications

B. Regulatory Requirements
1. VOC Content: Products shall comply with VOC limits of SCAQMD and, for interior paints and coatings applied at Project site, the following VOC limits, exclusive of colorants added to a tint base, when calculated according to 40 CFR 59, Subpart D (EPA Method 24)].
    1. Flat Paints and Coatings: 50 g/L.
    2. Nonflat Paints and Coatings: 50 g/L.
    3. Primers, Sealers, and Undercoaters: 100 g/L.
    4. Rust Preventative Coatings: 100 g/L.
    5. Floor Coatings: 50 g/L.
    6. Shellacs, Clear: 730 g/L.
    7. Shellacs, Pigmented: 550 g/L.
2. Colorants: The use of colorants containing hazardous chemicals, such as ethylene glycol, is prohibited.

C. Certifications

D. Field Samples

E. Mock-ups
1. Apply mockups of each paint system indicated and each color and finish selected to verify preliminary selections made under verification sample submittals and to demonstrate aesthetic effects and set quality standards for materials and execution.
2. Architect will select one surface to represent surfaces and conditions for application of each paint system specified in Part 3.
    a. Vertical and Horizontal Surfaces: Provide samples of at least 100 sq. ft.
    b. Other Items: Architect will designate items or areas required.
    c. Final approval of color selections will be based on mockups.
        1. If preliminary color selections are not approved, apply additional mockups of additional colors selected by Architect at no added cost to Owner.

3. Approval of mockups does not constitute approval of deviations from the Contract Documents contained in mockups unless Architect specifically approves such deviations in writing.
4. Subject to compliance with requirements, approved mockups may become part of the completed Work if undisturbed at time of Substantial Completion.

F. Pre-installation Meetings

1.07 DELIVERY, STORAGE, AND HANDLING

A. Packing, Shipping, Handling, and Unloading

B. Storage and Protection

1. Store materials not in use in tightly covered containers in well-ventilated areas with ambient temperatures continuously maintained at not less than 45 deg. F or more than 120 deg. F.
2. Maintain containers in clean condition, free of foreign materials and residue.
3. Remove rags and waste from storage areas daily.

C. Waste Management and Disposal

1.08 PROJECT CONDITIONS

A. Project Environmental Requirements

1. Apply paints only when temperature of surfaces to be painted and ambient air temperatures are between 50 and 105 deg F.
2. Do not apply paints when relative humidity exceeds 85 percent; at temperatures less than 5 deg F above the dew point; or to damp or wet surfaces.
3. Painting contractor should follow proper painting practices and exercise judgment based on his or her experience and project specific conditions as to when to proceed.

1.09 SEQUENCING

1.10 SCHEDULING

1.11 WARRANTY

1.12 SYSTEM STARTUP

1.13 OWNER'S INSTRUCTIONS

1.14 COMMISSIONING

1.15 MAINTENANCE

A. Extra Materials

1. Furnish extra materials from the same product run that match products installed and that are packaged with protective covering for storage and identified with labels describing content.
   a. Paint 5% but not less than 5 gal of each material and color applied.

PART 2 - PRODUCTS

2.01 MANUFACTURERS

A. Exterior Paint and Primer

1. Dunn-Edwards Corporation, 4885 E. 52nd Place, Los Angeles, CA 90058

2.02 EXISTING PRODUCTS
2.03 MATERIALS
- A. Colors
  1. As selected by architect from manufacturer's full range as well as any custom color matching
- B. Block Fillers
  1. (Dunn-Edwards) SMOOTH BLOCFIL PREMIUM
- C. Primers
  1. (Dunn-Edwards) EFF-STOP
  2. (Dunn-Edwards) ULTRA-GRIP Premium
  3. (Dunn-Edwards) ENDURAPRIME
- E. Exterior Paints
  1. (Dunn-Edwards) EVERSHIELD
  2. (Dunn-Edwards) ENDURA-COAT

2.04 MANUFACTURED UNITS
2.05 EQUIPMENT
2.06 COMPONENTS
2.07 ACCESSORIES
2.08 MIXES
2.09 FABRICATION
2.10 FINISHES
2.11 SOURCE QUALITY CONTROL
- A. Tests, Inspection
  1. Testing of Paint Materials: Owner reserves the right to invoke the following procedure:
     a. Owner may engage the services of a qualified testing agency to sample paint materials. Contractor will be notified in advance and may be present when samples are taken. If paint materials have already been delivered to Project site, samples may be taken at project site. Samples will be identified, sealed, and certified by testing agency.
     b. Testing agency will perform tests for compliance with product requirements.
     c. Owner may direct Contractor to stop applying coatings if test results show materials being used do not comply with product requirements. Contractor shall remove noncomplying paint materials from project site, pay for testing, and repaint surfaces painted with rejected materials. Contractor will comply with requirements to use compatible products and systems as described in this specification. Contractor will be required to remove rejected materials from previously painted surfaces if, on repainting with complying materials, the two paints are incompatible.

PART 3 - EXECUTION

2.01 INSTALLERS
3.02 EXAMINATION

A. Site Verification of Conditions
   1. Examine substrates and conditions, with Applicator present, for compliance with requirements for maximum moisture content and other conditions affecting performance of the Work.
   2. Maximum Moisture Content of Substrates: When measured with an electronic moisture meter as follows:
      a. Concrete: 12 percent.
      b. Masonry (Clay and CMU): 12 percent.
      c. Wood: 15 percent.
      d. Gypsum Board: 12 percent.
      e. Plaster: 12 percent.
   3. Gypsum Board Substrates: Verify that finishing compound is sanded smooth.
   4. Plaster Substrates: Verify that plaster is fully cured, including pH testing to determine that alkalinity is within limits established by the manufacturer.
   5. Spray-Textured Ceiling Substrates: Verify that surfaces are dry.
   6. Verify suitability of substrates, including surface conditions and compatibility with existing finishes and primers.
   7. Proceed with coating application only after unsatisfactory conditions have been corrected.
      a. Application of coating indicates acceptance of surfaces and conditions.

3.03 PREPARATION
A. Protection
B. Surface Preparation
   1. Comply with manufacturer's written instructions and recommendations in "MPI Manual" applicable to substrates indicated.
   2. Remove hardware, covers, plates, and similar items already in place that are removable and are not to be painted. If removal is impractical or impossible because of size or weight of item, provide surface-applied protection before surface preparation and painting.
      a. After completing painting operations, use workers skilled in the trades involved to reinstall items that were removed. Remove surface-applied protection if any.
   3. Clean substrates of substances that could impair bond of paints, including dust, dirt, oil, grease, and incompatible paints and encapsulants.
      a. Remove incompatible primers and re-prime substrate with compatible primers or apply tie coat as required to produce paint systems indicated.
   4. Concrete Substrates (Where specifically indicated on drawings)
      a. Remove release agents, curing compounds, efflorescence, and chalk. Do not paint surfaces if moisture content or alkalinity of surfaces to be painted exceeds that permitted in manufacturer's written instructions, including pH testing to determine that alkalinity is within limits established by the manufacturer.
   5. Masonry Substrates (Where specifically indicated on drawings)

a. Remove efflorescence and chalk. Do not paint surfaces if moisture content or alkalinity of surfaces or mortar joints exceed that permitted in manufacturer's written instructions.

6. Steel Substrates:
   a. Remove rust, loose mill scale, and shop primer, if any. Clean using methods recommended in writing by paint manufacturer but not less than the following:
      1. SSPC-SP 1, "Solvent Cleaning."
      2. SSPC-SP 2, "Hand Tool Cleaning."
      3. SSPC-SP 3, "Power Tool Cleaning."
      4. SSPC-SP 7/NACE No. 4, "Brush-off Blast Cleaning."
      5. SSPC-SP 11, "Power Tool Cleaning to Bare Metal."
7. Shop-Primed Steel Substrates:
   a. Clean field welds, bolted connections, and abraded areas of shop paint, and paint exposed areas with the same material as used for shop priming to comply with SSPC-PA 1 for touching up shop-primed surfaces.
8. Galvanized-Metal Substrates (Where specifically indicated on drawings)
   a. Remove grease and oil residue from galvanized sheet metal fabricated from coil stock to produce clean, lightly etched surfaces that promote adhesion of subsequently applied paints.
9. Aluminum Substrates (Where specifically indicated on drawings)
   a. Remove loose surface oxidation.
10. Wood Substrates:
    a. Scrape and clean knots, and apply coat of knot sealer before applying primer.
    b. Sand surfaces that will be exposed to view, and dust off.
    c. Prime edges, ends, faces, undersides, and backsides of wood.
    d. After priming, fill holes and imperfections in the finish surfaces with putty or plastic wood filler. Sand smooth when dried.

3.04 ERECTION

3.05 INSTALLATION

3.06 APPLICATION

A. Apply paints according to manufacturer's written instructions and to recommendations in "MPI Manual."
   1. Use applicators and techniques suited for paint and substrate indicated.
   2. Paint surfaces behind movable equipment and furniture same as similar exposed surfaces. Before final installation, paint surfaces behind permanently fixed equipment or furniture with prime coat only.
   3. Paint front and backsides of access panels, removable or hinged covers, and similar hinged items to match exposed surfaces.
   4. Do not paint over labels of independent testing agencies or equipment name, identification, performance rating, or nomenclature plates.

5. Primers specified in painting schedules may be omitted on items that are factory primed or factory finished if acceptable to topcoat manufacturers.

B. Tint each undercoat a lighter shade to facilitate identification of each coat if multiple coats of same material are to be applied. Tint undercoats to match color of topcoat, but provide sufficient difference in shade of undercoats to distinguish each separate coat.

C. If undercoats or other conditions show through topcoat, apply additional coats until cured film has a uniform paint finish, color, and appearance.

D. Apply paints to produce surface films without cloudiness, spotting, holidays, laps, brush marks, roller tracking, runs, sags, ropiness, or other surface imperfections. Cut in sharp lines and color breaks.

E. Block Fillers: Provide block fill as scheduled to conform to the following PDCA Standard P12-05:
   1. Level 3 - Premium Fill: One or multiple coats of high performance block filler manufactured to be applied at a high dry film build. Block filler shall be back-rolled to eliminate voids and reduce the majority of the masonry profile depth.

F. Painting Fire Suppression, Plumbing, HVAC, Electrical, Communication, and Electronic Safety and Security Work:
   1. Paint the following work where exposed in equipment rooms:
      a. Equipment, including panelboards and switch gear.
      b. Uninsulated metal piping.
      c. Uninsulated plastic piping.
      d. Pipe hangers and supports.
      e. Metal conduit.
      f. Plastic conduit.
      g. Tanks that do not have factory-applied final finishes.
      h. Duct, equipment, and pipe insulation having cotton or canvas insulation covering or other paintable jacket material.
   2. Paint the following work where exposed in occupied spaces:
      a. Equipment, including panelboards.
      b. Uninsulated metal piping.
      c. Uninsulated plastic piping.
      d. Pipe hangers and supports.
      e. Metal conduit.
      f. Plastic conduit.
      g. Duct, equipment, and pipe insulation having cotton or canvas insulation covering or other paintable jacket material.
      h. Other items as directed by Architect.
   3. Paint portions of internal surfaces of metal ducts, without liner, behind air inlets and outlets that are visible from occupied spaces.

3.07 CONSTRUCTION

3.08 REPAIR/RESTORATION

A. At completion of construction activities of other trades, touch up and restore damaged or defaced painted surfaces.

3.09 RE-INSTALLATION

3.10 FIELD QUALITY CONTROL

3.11 ADJUSTING

3.12 CLEANING

A. At end of each workday, remove rubbish, empty cans, rags, and other discarded materials from project site.

B. After completing paint application, clean spattered surfaces. Remove spattered paints by washing, scraping, or other methods. Do not scratch or damage adjacent finished surfaces.

3.13 DEMONSTRATION

3.14 PROTECTION

A. Protect work of other trades against damage from paint application. Correct damage to work of other trades by cleaning, repairing, replacing, and refinishing, as approved by Architect, and leave in an undamaged condition.

3.15 SCHEDULES

A. Steel (Structural Steel)
   1. 1st Coat – Shop-Applied Structural Steel Primer
      See Section 05 12 00 Structural Steel Framing
   2. 2nd Coat – (Dunn Edwards) EVERSHIELD, Sheen: Flat
   3. 3rd Coat – (Dunn Edwards) EVERSHIELD, Sheen: Semi-Gloss

B. Steel (Miscellaneous Steel Fabrications)
   1. 1st Coat – Shop-Applied Structural Steel Primer
      See Section 05 12 00 Structural Steel Framing
   2. 2nd Coat – (Dunn Edwards) EVERSHIELD, Sheen: Flat
   3. 3rd Coat – (Dunn Edwards) EVERSHIELD, Sheen: Semi-Gloss

C Steel (Hollow Metal Doors and Frames)
   1. 1st Coat – Factory Applied Shop Primer
   2. 2nd Coat – (Dunn Edwards) ENDURAPRIME, Sheen: Flat
   3. 3rd Coat – (Dunn Edwards) ENDURA-COAT, Sheen: Semi-Gloss

D. Steel (Ornamental Steel Fences & Gates)
   1. 1st Coat – Shop-Applied Structural Steel Primer
      See Section 05 12 00 Structural Steel Framing
   2. 2nd Coat – (Dunn Edwards) EVERSHIELD, Sheen: Flat
   3. 3rd Coat – (Dunn Edwards) EVERSHIELD, Sheen: Semi-Gloss

E. Concrete Unit Masonry
   1. 1st Coat – Water Repellent Coating
   2. 2nd Coat – Water Repellent Coating
      See Section 07 19 00 Water Repellents

F. Portland Cement Plaster
   1. 1st Coat – PRIMER (Dunn Edwards) EFF-STOP
   2. 2nd Coat – (Dunn Edwards) EVERSHIELD, Sheen: Flat
   3. 3rd Coat – (Dunn Edwards) EVERSHIELD, Sheen: Flat

G. Cast-In-Place Concrete
   1. 1st Coat – Water Repellent Coating
   2. 2nd Coat – Water Repellent Coating
      See Section 07 19 00 Water Repellents

END OF SECTION

SECTION 09 91 23
INTERIOR PAINTING

PART 1 - GENERAL

1.01 SUMMARY
- A. Section Includes
  1. Block Fillers
  2. Primers
  3. Interior Paints
- B. Products Supplied But Not Installed Under This Section
- C. Products Installed But Not Supplied Under This Section
- D. Related Sections
  1. 05 12 00 Structural Steel Framing
  2. 09 91 13 Exterior Painting
  3. 09 97 13 Steel Coatings
- E. Allowances
- F. Unit Prices
- G. Measurement Procedures
- H. Payment Procedures
- I. Alternates

1.02 REFERENCES
- A. C.C.R., Title 24, Part 11, 5.504.4.3 Paints and Coatings

1.03 DEFINITIONS
- A. Blocking: Two painted surfaces sticking together such as a painted door sticking to a painted jamb.
- B. Bio-Pruf: Biostabilizing additive, to protect products from premature microbial degradation.
- C. EG: Ethylene Glycol. Ethylene glycol is listed as a hazardous air pollutant (HAP) by the U.S. EPA.
- D. EPR: Environmental Performance Rating. Master Painters Institute (MPI) formula that relates to VOC, Performance of Category, Gloss and Appropriate specified use. Higher values equate to greater eco-efficiency.
- E. MPI: Master Painters Institute. Organization that establishes architectural paint standards and quality assurance programs in North America. www.paintinfo.com.
- F. PDCA: Painting & Decorating Contractors of America. www.pdca.org.
- G. RAVOC: Reactivity adjusted VOC. "Reactivity" means the ability of a VOC to promote ozone formation
- H. SSPC: The Society for Protective Coatings publishes Scopes of SSPC Surface Preparation Standards and Specifications. www.sspc.org.

1.04 SYSTEM DESCRIPTIONS

1.05 SUBMITTALS
- A. Product Data
  1. Submit product data for each type of product. Include preparation requirements and application instructions.
- B. Shop Drawings
- C. Samples

1. Submit samples for initial selection
2. Submit samples for verification that in each color and gloss topcoat.
    a. Submit samples on rigid backing, no smaller than 7" x 10" or larger than 8.5" x 11"
    b. Label each sample for project, architect, contractor, paint color name and number, and paint brand

D. Quality Assurance/Control Submittals
1. Design data, Test Reports, Certificates, Manufactures' Instructions, Manufactures' Field Reports, Qualification Statements
    a. Printed statement of VOC Content
    b. Documentation indicating the paints and coatings meet the testing and product requirements of the California Department of Health Services' "Standard Practice for the Testing of Volatile Organic Emissions from Various Sources Using Small-Scale Environmental Chambers."

E. Closeout Submittals

1.06 QUALITY ASSURANCE

A. Qualifications

B. Regulatory Requirements
1. VOC Content: Products shall comply with VOC limits of SCAQMD and, for interior paints and coatings applied at Project site, the following VOC limits, exclusive of colorants added to a tint base, when calculated according to 40 CFR 59, Subpart D (EPA Method 24)].
    1. Flat Paints and Coatings: 50 g/L.
    2. Nonflat Paints and Coatings: 50 g/L.
    3. Primers, Sealers, and Undercoaters: 100 g/L.
    4. Rust Preventative Coatings: 100 g/L.
    5. Floor Coatings: 50 g/L.
    6. Shellacs, Clear: 730 g/L.
    7. Shellacs, Pigmented: 550 g/L.
2. Low-Emitting Materials: Interior paints and coatings shall comply with the testing and product requirements of the California Department of Health Services' "Standard Practice for the Testing of Volatile Organic Emissions from Various Sources Using Small-Scale Environmental Chambers."
3. Colorants: The use of colorants containing hazardous chemicals, such as ethylene glycol, is prohibited.

C. Certifications

D. Field Samples

E. Mock-ups
1. Apply mockups of each paint system indicated and each color and finish selected to verify preliminary selections made under verification sample submittals and to demonstrate aesthetic effects and set quality standards for materials and execution.
2. Architect will select one surface to represent surfaces and conditions for application of each paint system specified in Part 3.
    a. Vertical and Horizontal Surfaces: Provide samples of at least 100 sq. ft.

b. Other Items: Architect will designate items or areas required.
c. Final approval of color selections will be based on mockups.
1. If preliminary color selections are not approved, apply additional mockups of additional colors selected by Architect at no added cost to Owner.

3. Approval of mockups does not constitute approval of deviations from the Contract Documents contained in mockups unless Architect specifically approves such deviations in writing.
4. Subject to compliance with requirements, approved mockups may become part of the completed Work if undisturbed at time of Substantial Completion.

F. Pre-installation Meetings

1.07 DELIVERY, STORAGE, AND HANDLING
A. Packing, Shipping, Handling, and Unloading
B. Storage and Protection
1. Store materials not in use in tightly covered containers in well-ventilated areas with ambient temperatures continuously maintained at not less than 45 deg. F or more than 120 deg. F.
2. Maintain containers in clean condition, free of foreign materials and residue.
3. Remove rags and waste from storage areas daily.
C. Waste Management and Disposal

1.08 PROJECT CONDITIONS
A. Project Environmental Requirements
1. Apply paints only when temperature of surfaces to be painted and ambient air temperatures are between 50 and 105 deg F.
2. Do not apply paints when relative humidity exceeds 85 percent; at temperatures less than 5 deg F above the dew point; or to damp or wet surfaces.
3. Painting contractor should follow proper painting practices and exercise judgment based on his or her experience and project specific conditions as to when to proceed.

1.09 SEQUENCING
1.10 SCHEDULING
1.11 WARRANTY
1.12 SYSTEM STARTUP
1.13 OWNER'S INSTRUCTIONS
1.14 COMMISSIONING
1.15 MAINTENANCE
A. Extra Materials
1. Furnish extra materials from the same product run that match products installed and the are packaged with protective covering for storage and identified with labels describing content.
a. Paint 5% but not less than 5 gal of each material and color applied.

PART 2 - PRODUCTS

2.01 MANUFACTURERS
- A. Interior Paint and Primer
  1. Dunn-Edwards Corporation, 4885 E. 52nd Place, Los Angeles, CA 90058

2.02 EXISTING PRODUCTS

2.03 MATERIALS
- A. Colors: As selected by architect from manufacturer's full range as well as any custom color matching
- B. Block Fillers
  1. (Dunn-Edwards) SMOOTH BLOCFIL PREMIUM
- C. Primers
  1. (Dunn-Edwards) ULTRA-GRIP Premium
  2. (Dunn-Edwards) ENDURAPRIME
  3. (Dunn-Edwards) VINYLASTIC PREMIUM
- D. Interior Paints
  1. (Dunn-Edwards) SUPREMA
  2. (Dunn-Edwards) ENDURA-COAT

2.04 MANUFACTURED UNITS

2.05 EQUIPMENT

2.06 COMPONENTS

2.07 ACCESSORIES

2.08 MIXES

2.09 FABRICATION

2.10 FINISHES

2.11 SOURCE QUALITY CONTROL
- A. Tests, Inspection
  1. Testing of Paint Materials: Owner reserves the right to invoke the following procedure:
     - a. Owner may engage the services of a qualified testing agency to sample paint materials. Contractor will be notified in advance and may be present when samples are taken. If paint materials have already been delivered to Project site, samples may be taken at project site. Samples will be identified, sealed, and certified by testing agency.
     - b. Testing agency will perform tests for compliance with product requirements.
     - c. Owner may direct Contractor to stop applying coatings if test results show materials being used do not comply with product requirements. Contractor shall remove noncomplying paint materials from project site, pay for testing, and repaint surfaces painted with rejected materials. Contractor will comply with requirements to use compatible products and systems as described in this specification. Contractor will be required to remove rejected materials from previously painted surfaces if, on repainting with complying materials, the two paints are incompatible.

PART 3 - EXECUTION

2.01 INSTALLERS

3.02 EXAMINATION

A. Site Verification of Conditions

1. Examine substrates and conditions, with Applicator present, for compliance with requirements for maximum moisture content and other conditions affecting performance of the Work.
2. Maximum Moisture Content of Substrates: When measured with an electronic moisture meter as follows:
   a. Concrete: 12 percent.
   b. Masonry (Clay and CMU): 12 percent.
   c. Wood: 15 percent.
   d. Gypsum Board: 12 percent.
   e. Plaster: 12 percent.
3. Gypsum Board Substrates: Verify that finishing compound is sanded smooth.
4. Plaster Substrates: Verify that plaster is fully cured, including pH testing to determine that alkalinity is within limits established by the manufacturer.
5. Spray-Textured Ceiling Substrates: Verify that surfaces are dry.
6. Verify suitability of substrates, including surface conditions and compatibility with existing finishes and primers.
7. Proceed with coating application only after unsatisfactory conditions have been corrected.
   a. Application of coating indicates acceptance of surfaces and conditions.

3.03 PREPARATION

A. Protection

B. Surface Preparation

1. Comply with manufacturer's written instructions and recommendations in "MPI Manual" applicable to substrates indicated.
2. Remove hardware, covers, plates, and similar items already in place that are removable and are not to be painted. If removal is impractical or impossible because of size or weight of item, provide surface-applied protection before surface preparation and painting.
   a. After completing painting operations, use workers skilled in the trades involved to reinstall items that were removed. Remove surface-applied protection if any.
3. Clean substrates of substances that could impair bond of paints, including dust, dirt, oil, grease, and incompatible paints and encapsulants.
   a. Remove incompatible primers and re-prime substrate with compatible primers or apply tie coat as required to produce paint systems indicated.
4. Concrete Substrates (Where specifically indicated on drawings)
   a. Remove release agents, curing compounds, efflorescence, and chalk. Do not paint surfaces if moisture content or

alkalinity of surfaces to be painted exceeds that permitted in manufacturer's written instructions, including pH testing to determine that alkalinity is within limits established by the manufacturer.

5. Masonry Substrates (Where specifically indicated on drawings)
   a. Remove efflorescence and chalk. Do not paint surfaces if moisture content or alkalinity of surfaces or mortar joints exceed that permitted in manufacturer's written instructions.
6. Steel Substrates:
   a. Remove rust, loose mill scale, and shop primer, if any. Clean using methods recommended in writing by paint manufacturer but not less than the following:
      1. SSPC-SP 1, "Solvent Cleaning."
      2. SSPC-SP 2, "Hand Tool Cleaning."
      3. SSPC-SP 3, "Power Tool Cleaning."
      4. SSPC-SP 7/NACE No. 4, "Brush-off Blast Cleaning."
      5. SSPC-SP 11, "Power Tool Cleaning to Bare Metal."
7. Shop-Primed Steel Substrates:
   a. Clean field welds, bolted connections, and abraded areas of shop paint, and paint exposed areas with the same material as used for shop priming to comply with SSPC-PA 1 for touching up shop-primed surfaces.
8. Galvanized-Metal Substrates (Where specifically indicated on drawings)
   a. Remove grease and oil residue from galvanized sheet metal fabricated from coil stock to produce clean, lightly etched surfaces that promote adhesion of subsequently applied paints.
9. Aluminum Substrates (Where specifically indicated on drawings)
   a. Remove loose surface oxidation.
10. Wood Substrates:
    a. Scrape and clean knots, and apply coat of knot sealer before applying primer.
    b. Sand surfaces that will be exposed to view, and dust off.
    c. Prime edges, ends, faces, undersides, and backsides of wood.
    d. After priming, fill holes and imperfections in the finish surfaces with putty or plastic wood filler. Sand smooth when dried.
11. Cotton or Canvas Insulation Covering Substrates
    a. Remove dust, dirt, and other foreign material that might impair bond of paints to substrates.

3.04 ERECTION

3.05 INSTALLATION

3.06 APPLICATION

A. Apply paints according to manufacturer's written instructions and to recommendations in "MPI Manual."
   1. Use applicators and techniques suited for paint and substrate indicated.

2. Paint surfaces behind movable equipment and furniture same as similar exposed surfaces. Before final installation, paint surfaces behind permanently fixed equipment or furniture with prime coat only.
3. Paint front and backsides of access panels, removable or hinged covers, and similar hinged items to match exposed surfaces.
4. Do not paint over labels of independent testing agencies or equipment name, identification, performance rating, or nomenclature plates.
5. Primers specified in painting schedules may be omitted on items that are factory primed or factory finished if acceptable to topcoat manufacturers.

B. Tint each undercoat a lighter shade to facilitate identification of each coat if multiple coats of same material are to be applied. Tint undercoats to match color of topcoat, but provide sufficient difference in shade of undercoats to distinguish each separate coat.

C. If undercoats or other conditions show through topcoat, apply additional coats until cured film has a uniform paint finish, color, and appearance.

D. Apply paints to produce surface films without cloudiness, spotting, holidays, laps, brush marks, roller tracking, runs, sags, ropiness, or other surface imperfections. Cut in sharp lines and color breaks.

E. Block Fillers: Provide block fill as scheduled to conform to the following PDCA Standard P12-05:
1. Level 3 - Premium Fill: One or multiple coats of high performance block filler manufactured to be applied at a high dry film build. Block filler shall be back-rolled to eliminate voids and reduce the majority of the masonry profile depth.

F. Painting Fire Suppression, Plumbing, HVAC, Electrical, Communication, and Electronic Safety and Security Work:
1. Paint the following work where exposed in equipment rooms:
   a. Equipment, including panelboards and switch gear.
   b. Uninsulated metal piping.
   c. Uninsulated plastic piping.
   d. Pipe hangers and supports.
   e. Metal conduit.
   f. Plastic conduit.
   g. Tanks that do not have factory-applied final finishes.
   h. Duct, equipment, and pipe insulation having cotton or canvas insulation covering or other paintable jacket material.
2. Paint the following work where exposed in occupied spaces:
   a. Equipment, including panelboards.
   b. Uninsulated metal piping.
   c. Uninsulated plastic piping.
   d. Pipe hangers and supports.
   e. Metal conduit.
   f. Plastic conduit.
   g. Duct, equipment, and pipe insulation having cotton or canvas insulation covering or other paintable jacket material.
   h. Other items as directed by Architect.

3. Paint portions of internal surfaces of metal ducts, without liner, behind air inlets and outlets that are visible from occupied spaces.

3.07 CONSTRUCTION

3.08 REPAIR/RESTORATION

A. At completion of construction activities of other trades, touch up and restore damaged or defaced painted surfaces.

3.09 RE-INSTALLATION

3.10 FIELD QUALITY CONTROL

3.11 ADJUSTING

3.12 CLEANING

A. At end of each workday, remove rubbish, empty cans, rags, and other discarded materials from project site.

B. After completing paint application, clean spattered surfaces. Remove spattered paints by washing, scraping, or other methods. Do not scratch or damage adjacent finished surfaces.

3.13 DEMONSTRATION

3.14 PROTECTION

A. Protect work of other trades against damage from paint application. Correct damage to work of other trades by cleaning, repairing, replacing, and refinishing, as approved by Architect, and leave in an undamaged condition.

3.15 SCHEDULES

A. Metals
1. 1st Coat – (Dunn-Edwards) ULTRA-GRIP PREMIUM
2. 2nd Coat – (Dunn-Edwards) SUPREMA, Sheen: Flat
3. 3rd Coat - (Dunn-Edwards) SUPREMA, Sheen: Semi-Gloss

B. Gypsum Board
(Non-Restrooms, Showers, Moisture Sensitive Areas)
1. 1st Coat – (Dunn Edwards) VINYLASTIC PREMIUM
2. 2nd Coat – (Dunn-Edwards) SUPREMA, Sheen: Flat
3. 3rd Coat - (Dunn-Edwards) SUPREMA, Sheen: Velvet

C. Gypsum Board
(Restrooms, Showers, Moisture Sensitive Areas)
1. 1st Coat – (Dunn Edwards) VINYLASTIC PREMIUM
2. 2nd Coat – (Dunn-Edwards) SUPREMA, Sheen: Flat
3. 3rd Coat - (Dunn-Edwards) SUPREMA, Sheen: Semi-Gloss

D. Hollow Metal Doors and Hollow Metal Frames
1. 1st Coat – Factory Applied Shop Primer
2. 2nd Coat – (Dunn Edwards) ENDURAPRIME
3. 3rd Coat – (Dunn Edwards) ENDURA-COAT, Sheen: Semi-Gloss

E. Concrete Unit Masonry
(Painted)
1. 1st Coat – (Dunn Edwards) SMOOTH BLOCFIL PREMIUM
2. 2nd Coat – (Dunn-Edwards) SUPREMA, Sheen: Flat
3. 3rd Coat - (Dunn-Edwards) SUPREMA, Sheen: Velvet

F. Concrete Unit Masonry
(Painted - Restrooms, Showers, Moisture Sensitive Areas)
1. 1st Coat – (Dunn Edwards) SMOOTH BLOCFIL PREMIUM
2. 2nd Coat – (Dunn-Edwards) SUPREMA, Sheen: Flat
3. 3rd Coat - (Dunn-Edwards) SUPREMA, Sheen: Semi-Gloss

G. Concrete Unit Masonry
(Painted – Pump Rooms, Chemical Storage)
1. 1st Coat – (Dunn Edwards) SMOOTH BLOCFIL PREMIUM
2. 2nd Coat – (Dunn Edwards) ENDURAPRIME
3. 3rd Coat – (Dunn Edwards) ENDURA-COAT, Sheen: Gloss

END OF SECTION

SECTION 09 96 56
EPOXY COATINGS

PART 1 GENERAL

1.01 SUMMARY
- A. Section Includes
  - 1. Epoxy coating floor finish for concrete slabs.
  - 2. Epoxy primer
- B. Products Supplied But Not Installed Under This Section
- C. Products Installed But Not Supplied Under This Section
- D. Related Sections
- E. Allowances
- F. Unit Prices
- G. Measurement Procedures
- H. Payment Procedures
- I. Alternates

1.02 REFERENCES
- A. C.C.R., Title 24, Part 11, 5.504.4.3 Paints and Coatings
- B. ASTM F1869 Standard Test Method for Measuring Moisture Vapor Emission Rate of Concrete Subfloor Using Anhydrous Calcium Chloride.
- C. International Concrete Repair Institute (ICRI) Concrete Surface Profile (CSP)

1.03 DEFINITIONS

1.04 SYSTEM DESCRIPTIONS
- A. Design Requirements, Performance Requirements
  - 1. Epoxy shall be two-component, high build, chemical resistant, and 100% solids.
  - 2. Epoxy shall have a VOC content of 0 g/L.

1.05 SUBMITTALS
- A. General
- B. Product Data
  - 1. Submit manufacturer's technical data sheets for products specified.
- C. Shop Drawings
- D. Samples
- E. Quality Assurance/Control Submittals
  - 1. Design Data, Test Reports, Certificates, Manufacturers' Instructions, Manufacturers' Field Reports, Qualification Statements
    - a. Submit manufacturer's application instructions for products specified.
- F. Closeout Submittals

1.06 QUALITY ASSURANCE
- A. Qualifications
- B. Regulatory Requirements
  - 1. VOC Content: Products shall comply with VOC limits of SCAQMD and, for interior paints and coatings applied at Project site, the following VOC limits, exclusive of colorants added to a tint base,

when calculated according to 40 CFR 59, Subpart D (EPA Method 24)].

1. Flat Paints and Coatings: 50 g/L.
2. Nonflat Paints and Coatings: 50 g/L.
3. Primers, Sealers, and Undercoaters: 100 g/L.
4. Rust Preventative Coatings: 100 g/L.
5. Floor Coatings: 50 g/L.
6. Shellacs, Clear: 730 g/L.
7. Shellacs, Pigmented: 550 g/L.

2. Low-Emitting Materials: Interior paints and coatings shall comply with the testing and product requirements of the California Department of Health Services' "Standard Practice for the Testing of Volatile Organic Emissions from Various Sources Using Small-Scale Environmental Chambers."
3. Colorants: The use of colorants containing hazardous chemicals, such as ethylene glycol, is prohibited.

C. Certifications
D. Field Samples
E. Mock-ups
F. Pre-installation Meetings

1.07 DELIVERY, STORAGE, AND HANDLING
A. Packing, Shipping, Handling, and Unloading
B. Acceptance at Site
C. Storage and Protection
1. Store in a dry temperature-controlled environment between 60 degrees F. to 90 degrees F.
D. Waste Management and Disposal

1.08 PROJECT CONDITIONS
A. Project Environmental Requirements
1. Surface, ambient and material temperature shall be between 55°F and 90°F with a relative humidity below 75% at time of application.
B. Existing Conditions

1.09 SEQUENCING
1.10 SCHEDULING
1.11 WARRANTY
1.12 SYSTEM STARTUP
1.13 OWNER'S INSTRUCTIONS
1.14 COMMISSIONING
1.15 MAINTENANCE

PART 2 PRODUCTS

2.01 MANUFACTURERS
A. SureCrete Design Product, 15246 Citrus County Drive, Dade City, FL 33523, or equal.

2.02 EXISTING PRODUCTS
2.03 MATERIALS
A. Epoxy Coating
1. (SureCrete) DK400WB, Matte Sheen
Color as selected by architect including stock and non-stock options.

2.04 MANUFACTURED UNITS
2.05 EQUIPMENT
2.06 COMPONENTS
2.07 ACCESSORIES
2.08 MIXES
2.09 FABRICATION
2.10 FINISHES
2.11 SOURCE QUALITY CONTROL

PART 3 EXECUTION

3.01 INSTALLERS
3.02 EXAMINATION
A. Site Verification of Conditions
1. Concrete floor shall be sound, clean, dry, and free of oil, dirt, grease, paint, laitance, and the typical membrane forming curing compounds.
2. Concrete shall be at least 28 days old prior to application.
3. Moisture Vapor Emission Rate of concrete slab should be no more than 3lbs according to ASTM F 1869 at time of application.

3.03 PREPARATION
A. Protection
B. Surface Preparation
1. If oils or grease are present chemical degreasers should be used to thoroughly degrease concrete before mechanically prepping concrete slab.
2. Floors shall be mechanically prepared by method of shot blast or sandblast to result in an International Concrete Repair Institute (ICRI) Concrete Surface Profile (CSP) of between CSP #1-2, or the texture of medium grit sandpaper to ensure proper adhesion.

3.04 ERECTION
3.05 INSTALLATION
3.06 APPLICATION
A. General
1. Application shall strictly follow manufacturers written application instructions.
2. Product shall achieve a minimum 400 sf/gal. coverage rate.
3. Provide first coat, second coat, and sacrificial coat.

3.07 CONSTRUCTION
3.08 REPAIR/RESTORATION
3.09 RE-INSTALLATION
3.10 FIELD QUALITY CONTROL
3.11 ADJUSTING

3.12 CLEANING
3.13 DEMONSTRATION
3.14 PROTECTION
3.15 SCHEDULES

END OF SECTION

SECTION 09 97 13
STEEL COATINGS

PART 1 GENERAL

1.01 SUMMARY

A. Section Includes
   1. Field applied steel coatings:
      a. Cold Galvanizing for Field Touch-Ups to Hot-Dip Galvanized Members
B. Products Supplied But Not Installed Under This Section
C. Products Installed But Not Supplied Under This Section
D. Related Sections
   1. 05 12 00 Structural Steel Framing
   2. 05 40 00 Cold-Formed Metal Framing
   3. 05 50 00 Metal Fabrications
E. Allowances
F. Unit Prices
G. Measurement Procedures
H. Payment Procedures
I. Alternates

1.02 REFERENCES

A. Federal Specification DOD-P-21035A Galvanizing Repair Specification
B. Federal Specification MIL-P-26915A (USAF Zinc Dust Primer)
C. Federal Specification TT-P-460 (Type I, Zinc Dust)
D. ASTM A 239 Locating the Thinnest Spot in a Zinc (Galvanized) Coating in Iron or Steel Articles by the Preece Test (Copper Sulfate Dip)
E. ASTM A 780 Repair of Damaged Hot-Dip Galvanizing
F. ASTM B 117 Salt Spray (Fog) Testing
G. ASTM D 520 Type III Specification for Zinc Dust (Metallic Zinc Powder);
H. ASTM E 376 Measuring Coating Thickness by Magnetic-Field or Eddy Current (electromagnetic) Test Methods
I. SSPC-PS 12.00 Guide to Zinc-Rich Coating Systems
J. SSPC Paint 20 Zinc-Rich Primers, Type II, Organic
K. SSPC-5P3 Surface Preparation Specification No. 3, Power Tool Cleaning
L. SSPC-5P6 Surface Preparation Specification No. 6, Commercial Blast Cleaning
M. C.C.R., Title 24, Part 11, 5,504.4.3 Paints and Coatings

1.03 DEFINITIONS

A. Cold Galvanizing: A method of applying a zinc coating to structural steel members, assemblies and fabrications at ambient temperatures to achieve long-term corrosion protection.
B. Cathodic Protection: Reduction or prevention of corrosion of a metal surface by making it a cathode in an electrolytic cell.
C. Galvanic Action: When two dissimilar metals come into electrical contact with each other in the presence of an electrolyte, the less noble metal (zinc) will sacrifice itself (corrode) to protect the more noble metal (steel, iron, or aluminum).
D. SSPC: The Society for Protective Coatings

1.04 SYSTEM DESCRIPTIONS

A. Design Requirements, Performance Requirements
    1. Cold galvanizing shall not be substituted for the hot-dip galvanizing process. Cold galvanizing shall only be used to repair surfaces as a result of field welding and field grinding of steel members.

1.05 SUBMITTALS
A. General
B. Product Data
    1. Submit manufacturer's product data sheet for products specified.
C. Shop Drawings
D. Samples
E. Quality Assurance/Control Submittals
    1. Instructions
        a. Submit manufacturer's instructions and recommendations for application.
F. Closeout Submittals

1.06 QUALITY ASSURANCE
A. Qualifications
    1. Applicators shall have a minimum of (5) years full time experience executing work of similar scope and complexity.
B. Regulatory Requirements
C. Certifications
D. Field Samples
    1. Prepare field samples of exposed structural steel primer for review and selection by the architect of texture and finish.
    2. Locate field samples as determined by architect.
    3. Approved samples shall establish standards by which the Work will be judged.
E. Mock-ups
F. Pre-installation Meetings
    1. Pre-Application Conference
        a. Convene a conference at the project site (7) days prior to starting application, to review the Drawings and Specifications, the reviewed submittals, field samples, manufacturer's instructions and recommendations, sequencing and interface considerations and project conditions. Conference shall be attended by supervisory, application and quality control personnel of Contractor and all subcontractors performing this and directly related work.
        b. Construction Manager, Architect, and Owner will attend the conference.

1.07 DELIVERY, STORAGE, AND HANDLING
A. Packing, Shipping, Handling, and Unloading
B. Acceptance at Site
    1. Material shall be accepted at site providing no damage deleterious to products' function is visible.
C. Storage and Protection
    1. Do not store containers above 104 degrees F.
    2. Store containers out of sunlight and away from heat and sparks.
D. Waste Management and Disposal

1.08 PROJECT CONDITIONS
- A. Project Environmental Requirements
  1. Comply with environmental requirements and recommendations of manufacturer for proper application of products.
- B. Existing Conditions

1.09 SEQUENCING
1.10 SCHEDULING
1.11 WARRANTY
1.12 SYSTEM STARTUP
1.13 OWNER'S INSTRUCTIONS
1.14 COMMISSIONING
1.15 MAINTENANCE

PART 2 PRODUCTS

2.01 MANUFACTURERS
- A. Field Applied Coatings
  1. Cold Galvanizing
     a. ZRC Worldwide, 145 Enterprise Drive, Marshfield, MA 02050, or Equal.
     b. Aervoe Industries, Inc., P.O. Box 485, Gardnerville, NV 89410

2.02 EXISTING PRODUCTS
2.03 MATERIALS
2.04 MANUFACTURED UNITS
2.05 EQUIPMENT
2.06 COMPONENTS
2.07 ACCESSORIES
2.08 MIXES
2.09 FABRICATION
2.10 FINISHES
- A. Field Applied Coatings
  1. Cold Galvanizing
     a. (ZRC) Cold Galvanizing Compound
     b. (Aervoe) Cold Galvanize Coating 93% Zinc Rich

2.11 SOURCE QUALITY CONTROL

PART 3 EXECUTION

3.01 INSTALLERS
3.02 EXAMINATION
- A. Site Verification of Conditions
  1. Examine Project conditions and completed Work and verify that surfaces to be coated are be clean; i.e. devoid of grease, oil, mill scale, oxidation, loosely adherent rust, paint, etc.
  2. Immediately correct all deficiencies and conditions which would cause improper execution of Work specified in this Section and subsequent Work.
  3. Proceeding with Work specified in this Section shall be interpreted to mean that all conditions were determined to be acceptable prior to start of Work.

3.03 PREPARATION
- A. Protection
- B. Surface Preparation
  1. Comply with the following SSPC surface preparation specifications and practices for the following surface contaminates:
     - a. Hot-Dip Galvanizing Touch Ups
       1. Power Tool Cleaning to SSPC-SP3
     - b. Exposed Structural Steel
       1. Power Tool Cleaning to SSPC-SP3
  2. Application of coating shall commence immediately after surface preparation.

3.04 ERECTION

3.05 INSTALLATION

3.06 APPLICATION
- A. Coating shall be applied by low pressure compressor-type spray or airless type spray. Spray can application will not be accepted.
- B. The coatings shall be applied at sufficient wet film thickness to achieve a minimum dry film as recommended by the manufacturer, using manufacturers recoat time directions.
- C. Apply coatings in strict conformance with manufacturer's application instructions.
- D. Touch-up any areas where coat has been damaged in accordance with manufacturer's recommendations.
- E. Min. of (2) two coats are required. Top coating is not permitted.

3.07 CONSTRUCTION

3.08 REPAIR/RESTORATION

3.09 RE-INSTALLATION

3.10 FIELD QUALITY CONTROL
- A. Site Tests, Inspection
  1. Inspect installed galvanized materials, fabrications, and assemblies for coating thickness in accordance with ASTM E-376.
- B. Manufacturers' Field Services

3.11 ADJUSTING

3.12 CLEANING

3.13 DEMONSTRATION

3.14 PROTECTION

3.15 SCHEDULES
- A. Hot-Dip Galvanized Steel Touch-Ups
  1. 1st Coat – Cold Galvanizing
  2. 2nd Coat – Cold Galvanizing

END OF SECTION

SECTION 10 11 16
MARKERBOARDS

PART 1 GENERAL

1.01 SUMMARY
- A. Section Includes
  - 1. Porcelain Enamel Steel Markerboards
  - 2. Accessories
- B. Products Supplied But Not Installed Under This Section
- C. Products Installed But Not Supplied Under This Section
- D. Related Sections
- E. Allowances
- F. Unit Prices
- G. Measurement Procedures
- H. Payment Procedures
- I. Alternates

1.02 REFERENCES
- A. ASTM E84 Standard Test Method for Surface Burning Characteristics for Building Materials
- B. ASTM B221 Standard Specification for Aluminum and Aluminum-Alloy Extruded Bars, Rods, Wire, Profiles, and Tubes.
- C. Porcelain Enamel Institute PEI-1002 Manual and Performance Specifications for E3 Porcelain Enamel Writing Surfaces.

1.03 DEFINITIONS

1.04 SYSTEM DESCRIPTIONS

1.05 SUBMITTALS
- A. General
- B. Product Data
  - 1. Submit manufacturer's technical data for materials specified.
- C. Shop Drawings
  - 1. Submit manufacturer's shop drawings for each type of visual display board indicated.
- D. Samples
  - 1. Submit manufacturer's color charts and composition samples of face, core, backing, and trim where required.
- E. Quality Assurance/Control Submittals
  - 1. Design Data, Test Reports, Certificates, Manufacturers' Instructions, Manufacturers' Field Reports, Qualification Statements
    - a. Submit manufacturer's installation instructions.
    - b. Submit manufacturer's instructions on regular cleaning and removal of stains
- F. Closeout Submittals

1.06 QUALITY ASSURANCE
- A. Qualifications
  - 1. Manufacturer shall be actively manufacturing visual display boards in the USA.
- B. Regulatory Requirements
  - 1. Fire-Test-Response Characteristics

a. Plastic laminate shall comply with the following surface-burning characteristics as determined by testing identical products per ASTM E-84 by UL or another testing and inspecting agency acceptable to authorities having jurisdiction:
1. Flame-Spread Index: 75 or less
2. Smoke-Developed Index: 450 or less

C. Certifications
D. Field Samples
E. Mock-ups
F. Pre-installation Meetings

1.07 DELIVERY, STORAGE, AND HANDLING
A. Packing, Shipping, Handling, and Unloading
1. Schedule delivery of visual display products allowing for sufficient working space to allow the boards to installed upon delivery.
B. Acceptance at Site
C. Storage and Protection
1. Store products in original packaging until ready for installation.
2. Store all packages from weather conditions and temperature and humidity levels suggested by the manufacturer
D. Waste Management and Disposal

1.08 PROJECT CONDITIONS
A. Project Environmental Requirements
1. Site to observe Manufacturer's recommendation to acclimate the installation area for moisture and temperature to normal operating temperatures
B. Existing Conditions
1. Field measure before shop drawings and manufacturing to guarantee a correct fit.

1.09 SEQUENCING
1.10 SCHEDULING
1.11 WARRANTY
1.12 SYSTEM STARTUP
1.13 OWNER'S INSTRUCTIONS
1.14 COMMISSIONING
1.15 MAINTENANCE

PART 2 PRODUCTS

2.01 MANUFACTURERS
A. Nelson Adams NACO, 160 N. Cactus Ave, Rialto, CA 92376, or equal.
B. AARCO Products, Inc., 21 Old Dock Road, Yaphank, NY 11980
C. Claridge, 180 North Sherman Road, Corona, CA 92882

2.02 EXISTING PRODUCTS
2.03 MATERIALS
- A. Writing Surface Face Sheet
  - 1. Manufactured in accordance with E3 Porcelain Enamel Institute's specification.
  - 2. Surface shall be enameling grade cold rolled steel manufactured from a minimum of 30% recycled material
  - 3. Color: White, (Black at Block Box)
- B. Writing Surface Core
  - 1. ½-inch medium density fiberboard
- C. Writing Surface Backing
  - 1. Aluminum Sheet
- D. Frame/Trim
  - 1. Trim shall be 6063 alloy grade aluminum with T5 tempering in accordance with ASTM-B221.
    - a. Finish: Clear, satin anodized finish

2.04 MANUFACTURED UNITS
- A. (Nelson Adams) Series 1000, box markertray.
  - 1. Size: 192-inch W x 48-inch H or as indicated on drawings.
- B. (AARCO) Architectural High Performance Series Markerboards
- C. (Claridge) Series 1

2.05 EQUIPMENT
2.06 COMPONENTS
2.07 ACCESSORIES
- A. Marker Tray: Continuous box type aluminum tray with injection molded end closures at bottom of each markerboard unit.
- B. Map Rail: Continuous 2-inch map rail with cork insert and end stops at the top of each markerboard
- C. Map Hooks: 1 for every 24-inches of map rail.
- D. Roller brackets 2 for every 24-inches of map rail.
- E. Flag holders: 1 for every markerboard unit.

2.08 MIXES
2.09 FABRICATION
2.10 FINISHES
2.11 SOURCE QUALITY CONTROL

PART 3 EXECUTION

3.01 INSTALLERS
3.02 EXAMINATION
- A. Site Verification of Conditions
  - 1. Verify before installation that interior moisture and temperature are normal occupied conditions.
  - 2. Verify that wall surfaces are true and plumb are prepared to receive boards.

3.03 PREPARATION
3.04 ERECTION
3.05 INSTALLATION

A. Deliver factory built materials completely assembled and of dimensions shown in detail and in accordance with manufacturer's approved shop drawings.
B. Follow manufacturer's instructions for storage and handling of units prior to installation .
C. Do not install boards on damp walls or in dam or humid weather without climate control in the facility.
D. Install units level and plumb, keeping perimeter trim straight in accordance with manufacturer's recommendation.

3.06 APPLICATION
3.07 CONSTRUCTION
3.08 REPAIR/RESTORATION
3.09 RE-INSTALLATION
3.10 FIELD QUALITY CONTROL
3.11 ADJUSTING
A. Verify that all accessories are installed as detailed for each unit

3.12 CLEANING
A. At completion of work, clean surfaces and trim in accordance with manufacturer's recommendations, leaving units ready for use.

3.13 DEMONSTRATION
3.14 PROTECTION
3.15 SCHEDULES

END OF SECTION

SECTION 10 14 67
TACTILE SIGNAGE

PART 1 GENERAL

1.01 SUMMARY
- A. Section Includes
  - 1. Photopolymer Tactile Signage
- B. Products Supplied But Not Installed Under This Section
- C. Products Installed But Not Supplied Under This Section
- D. Related Sections
- E. Allowances
- F. Unit Prices
- G. Measurement Procedures
- H. Payment Procedures
- I. Alternates

1.02 REFERENCES

1.03 DEFINITIONS

1.04 SYSTEM DESCRIPTIONS
- A. Design Requirements, Performance Requirements
  - 1. Provide photopolymer signage that conforms to the requirements of 2019 C.C.R., Title 24, Part 2, Chapter 11B
  - 2. All signage shall be integral, monolithic, and one-piece. Adhered letters will not be accepted.

1.05 SUBMITTALS
- A. Product Data
  - 1. Submit data sufficient to demonstrate compliance with this section and drawing requirements.
- B. Shop Drawings
  - 1. Submit shop drawing and catalog cuts of items to be provided. Manufacturer or producer's standard drawings and technical information may be acceptable where complete enough to determine acceptability.
  - 2. Drawings shall show sizes, lettering, graphics, construction details of each type of sign and mounting details with appropriate fasteners for specific project substates.
- C. Samples
  - 1. Submit samples of products and materials where options of color, finish, pattern or texture exist, including fasteners, and adhesive.
  - 2. Submit selection samples.
  - 3. Submit verification samples.
- D. Quality Assurance/Control Submittals
  - 1. Design Data, Test Reports, Certificates, Manufacturers' Instructions, Manufacturers' Field Reports, Qualification Statements
- E. Closeout Submittals

1.06 QUALITY ASSURANCE
- A. Qualifications

1. Products and materials to be provided are to be from manufacturers and producers regularly engaged full-time in the manufacture or production of this and similar items, with a history of successful manufacture or production acceptable to the Owner.
2. In addition to complying with pertinent codes and regulations, comply with industry and trade standards normally associated with this product or material, except where specified product or material is superior in quality to industry and trade standards.

B. Regulatory Requirements
1. All signage shall comply with 2019 C.C.R., Title 24, Part 2, Chapter 11B
2. Raised characters shall comply with CBC Section 11B-703.2:
   a. Depth: It shall be 1/32 inch minimum above their background and shall be sans serif uppercase and be duplicated in Braille.
   b. Height: It shall be 5/8" inch minimum and 2" inches maximum based on the height of the uppercase letter I. CBC Section 11B-703.2.5
   c. Finish and Contrast: Characters and their background shall have a non-glare finish. Character shall contrast with their background with either light characters on a dark background or dark characters on a light background. CBC Section 11B-703.5.1.
3. Raised Character Proportions: It shall be selected from fonts where the width of the uppercase letter 'O' is 60% minimum and 110% maximum of the height of the uppercase letter 'I'. Stroke thickness of the uppercase letter 'I' shall be 15% maximum of the height of the character. CBC Sections 11B-703.4 and 11B-703.6
4. Character Spacing: Spacing between individual tactile characters shall comply with CBC Section 11B-703.2.7 and 11B-703.2.8
5. Braille: It shall be contracted (Grade 2) and shall comply with CBC Sections 11B-703.3 and 11B-703.4. braille dots shall have a domed and rounded shape and shall comply with CBC Table and Figure 11B-703.3.1.
6. Mounting Height: A tactile sign shall be located 48" minimum to the baseline of the lowest Braille cells and 60" maximum to the baseline of the highest line of raised characters above the finish floor or ground surface.
7. Mounting location: A tactile sign shall be located on the approach side, as one enters or exits rooms or space, and be reached within 0" of the required clear floor space per CBC Section and Figure 11B-703.4.2 as follows:
   a. A clear floor space of 18" x 18" minimum, centered on the tactile characters, shall be provided beyond the arc of any door swings between the closed position and 45 degree open position.
   b. On the wall at the latch side of a single door
   c. On the inactive leaf of a double door with one active leaf.
   d. On the wall at the right side of a double door with two active leafs.

e. On the nearest adjacent wall where there is no wall space at the latch side of a single door or no space at the right side of a double door with two active leafs.
f. Visual Characters shall comply with CBC Section 11B-703.5 and shall be 40" minimum above finish floor or ground. Visual character stroke thickness of the uppercase letter "I" shall be 10% minimum and 20% maximum of the height of the character. CBC Section 11B-703.5.7.
g. Pictograms shall comply with CBC Section 11B-703.6
h. Symbol of accessibility shall comply with CBC Section 11B-703.7

C. Certifications
D. Field Samples
E. Mock-ups
F. Pre-installation Meetings

1.07 DELIVERY, STORAGE, AND HANDLING
A. Packing, Shipping, Handling, and Unloading
B. Acceptance at Site
C. Storage and Protection
1. Store in a safe, dry place with all shop-supplied protection and labeling intact and legible until set, applied or installed.
2. Use all reasonable means necessary to protect products and materials before, during and after installation.

1.08 PROJECT CONDITIONS
1.09 SEQUENCING
1.10 SCHEDULING
1.11 WARRANTY
A. Provide Owner with a written warranty as a condition of work acceptance, signed by Contractor and installer (where applicable), agreeing to maintain, repair and/or replace products and materials for one year following acceptance, and without additional cost to Owner.

1.12 SYSTEM STARTUP
1.13 OWNER'S INSTRUCTIONS
1.14 COMMISSIONING
1.15 MAINTENANCE

PART 2 PRODUCTS

2.01 MANUFACTURERS
A. Signs and Lucite Products, Inc., 2721 Kimball Ave., Pomona, CA 91767, or equal.
B. Vomar Products, Inc., 7800 Deering Ave., Canoga Park, CA 91304
C. ASI, Los Angeles, 5849 Uplander Way, Culver City, CA 90230

2.02 EXISTING PRODUCTS
2.03 MATERIALS
A. ¼-inch thick matte photopolymer plastic, 1/32-inch tactile lettering, with ¼-inch radius corners

2.04 MANUFACTURED UNITS

2.05 EQUIPMENT
2.06 COMPONENTS
2.07 ACCESSORIES
2.08 MIXES
2.09 FABRICATION
2.10 FINISHES
- A. Shop Priming, Shop Finishing
  1. Color: TBD, as selected by architect
  2. Sheen: Matte
  3. Coating: Graffiti Proof

2.11 SOURCE QUALITY CONTROL

PART 3 EXECUTION

3.01 INSTALLERS
3.02 EXAMINATION
3.03 PREPARATION
3.04 ERECTION
3.05 INSTALLATION
- A. Install signs in strict accordance with manufacturer's recommendation and according to details of the drawings.

3.06 APPLICATION
3.07 CONSTRUCTION
3.08 REPAIR/RESTORATION
3.09 RE-INSTALLATION
3.10 FIELD QUALITY CONTROL
3.11 ADJUSTING
3.12 CLEANING
3.13 DEMONSTRATION
3.14 PROTECTION
3.15 SCHEDULES

END OF SECTION

SECTION 10 21 13
TOILET COMPARTMENTS

PART 1 GENERAL

1.01 SUMMARY
- A. Section Includes
  1. Solid Phenolic Toilet Partitions
  2. Solid Phenolic Urinal Privacy Screens
  3. Accessories
- B. Products Supplied But Not Installed Under This Section
- C. Products Installed But Not Supplied Under This Section
- D. Related Sections
  1. 06 10 00 Rough Carpentry
  2. 10 28 00 Toilet, Bath, and Laundry Accessories
- E. Allowances
- F. Unit Prices
- G. Measurement Procedures
- H. Payment Procedures
- I. Alternates

1.02 REFERENCES
- A. ASTM E84 Standard Test Method for Surface Burning Characteristics of Building Materials.
- B. ASTM A 240 - Standard Specification for Chromium and Chromium-Nickel Stainless Steel Plate, Sheet, and Strip for Pressure Vessels and for General Applications.
- C. ASTM A666 - Standard Specification for Annealed or Cold-Worked Austenitic Stainless Steel Sheet, Strip, Plate, and Flat Bar.
- D. ASTM B 221 - Specification for Aluminum and Aluminum-Alloy Extruded Bars, Rods, Wire, Profiles, and Tubes.
- E. ICC/ANSI A117.1 - Accessible and Usable Buildings and Facilities, as applicable to toilet compartments designated as accessible.

1.03 DEFINITIONS

1.04 SYSTEM DESCRIPTIONS
- A. Design Requirements, Performance Requirements
  1. Solid Core Construction
  2. Non-ghosting graffiti removal
  3. Floor-Anchored, Overhead-Braced

1.05 SUBMITTALS
- A. General
- B. Product Data
  1. Submit manufacturer’s data sheets for each product specified. Include fabrication details, descriptions of materials and finishes.
- C. Shop Drawings
  1. Submit manufacturer’s shop drawings for each product specified including but not limited to:
     a. Plans, elevations, details of construction and attachment to adjacent construction.
     b. Anchorage and backing/blocking locations to support partitions and accessory items.

c. Field verified clear dimensions for all areas of work.

D. Samples
1. Selection Samples: For each finish product specified, two complete sets of color chips representing manufacturer's full range of available colors and patterns.
2. Verification Samples: For each finish product specified, two samples, minimum size 6 inches square representing actual product, color, patterns, and textures.

E. Quality Assurance/Control Submittals
1. Design Data, Test Reports, Certificates, Manufacturers' Instructions, Manufacturers' Field Reports, Qualification Statements
a. Submit manufacturer's preparation instructions and recommendations.
b. Submit manufacturer's storage and handling requirements and recommendations.
c. Submit manufacturer's installation instructions.

F. Closeout Submittals
a. Submit manufacturer's maintenance and cleaning instructions.

1.06 QUALITY ASSURANCE

A. Qualifications
1. Manufacturer Qualifications: Minimum 5-years' experience manufacturing toilet compartments.
2. Installer Qualifications: Minimum 3-years' experience regularly engaged in installation of toilet compartments.
3. Obtain toilet compartment components and accessories from single manufacturer.

B. Regulatory Requirements
1. Fire-Test-Response Characteristics
a. Plastic laminate shall comply with the following surface-burning characteristics as determined by testing identical products per ASTM E-84 by UL or another testing and inspecting agency acceptable to authorities having jurisdiction:
1. Flame-Spread Index: 75 or less (Class B)
2. Smoke-Developed Index: 450 or less
2. Accessible Toilet Compartments
a. Wheelchair accessible compartment shall comply with **CBC Section 11B-604.8.1.**
b. Toe clearance for at least one side partition of a wheelchair accessible compartment shall comply with **CBC Section and Figure 11B-604.8.1.4**. It shall be 9" high above the finish floor and 6" deep minimum beyond the compartment side face of the partition, exclusive of partition support members. It shall be 12" high minimum above the finish floor for children's use. Partition components at toe clearances shall be smooth without sharp edges or abrasive surfaces. Toe clearance at the side partition is not required in a compartment greater than 66" wide.
c. Ambulatory accessible compartments shall be provided where there are six or more toilet compartments, or where

the combination of urinals and water closets totals six or more per **CBC Section 11B-213.3.1**. Such compartment shall comply with **CBC Section 11B-604.8.2.**

d. Door and door hardware for accessible compartments shall be self-closing and shall comply with **CBC section 11B-404** except that pull-side clearance for ambulatory accessible compartments shall be minimum 44" clear, rather than 60". **CBC Figure 11B-604.8.2**.

e. A door pull complying with **CBC Section 11B-404.2.7** shall be placed on both sides of the door near the latch.

f. Ambulatory Accessible Toilet Compartment doors shall not swing into the clear floor space or clearance required for any fixture or into the minimum required compartment area. **CBC Section 11B-604.8.2.2.**

C. Certifications

D. Field Samples

E. Mock-ups

1. Provide a mock-up for evaluation of surface preparation techniques and application workmanship.
   a. Area to be designated by Architect.
   b. Do not proceed with remaining work until workmanship is approved by Architect.
   c. Refinish mock-up area as required to produce acceptable work.

F. Pre-installation Meetings

1.07 DELIVERY, STORAGE, AND HANDLING

A. Packing, Shipping, Handling, and Unloading

1. Deliver products in manufacturer's unopened packaging bearing the brand name and manufacturer's identification until ready for installation.
2. Handle materials to avoid damage.

B. Acceptance at Site

C. Storage and Protection

1. Store products in manufacturer's unopened packaging bearing the brand name and manufacturer's identification until ready for installation.

D. Waste Management and Disposal

1.08 PROJECT CONDITIONS

A. Project Environmental Requirements

1. Maintain environmental conditions (temperature, humidity, and ventilation) within limits recommended by manufacturer for optimum results.
2. Do not install products under environmental conditions outside manufacturer's recommended limits.

B. Existing Conditions

1.09 SEQUENCING

1.10 SCHEDULING

1.11 WARRANTY

A. Manufacturer's standard 25-year limited warranty for panels, doors, and stiles against breakage, corrosion, delamination, and defects in factory workmanship.
B. Manufacturer's standard 1-year guarantee against defects in material and workmanship for stainless steel door hardware and mounting brackets.

1.12 SYSTEM STARTUP
1.13 OWNER'S INSTRUCTIONS
1.14 COMMISSIONING
1.15 MAINTENANCE

PART 2 PRODUCTS

2.01 MANUFACTURERS
A. Solid Phenolic Toilet Partitions
1. Bobrick Washroom Equipment, Inc., 6901 Tujunga Avenue, North Hollywood, CA 91605, or equal.
2. Bradley Corporation, W142 N9101 Fountain Boulevard, Menomonee Falls, WI 53051
B. Laminate Facing
1. Formica Corporation, 10155 Reading Road, Cincinnati, OH 45241, or equal.
2. Wilsonart Americas, 2501 Wilsonart Drive, P.O. Box 6110, Temple, TX 76503

2.02 EXISTING PRODUCTS
2.03 MATERIALS
2.04 MANUFACTURED UNITS
A. Solid Phenolic Toilet Partitions
1. Manufacturer:
a. (Bobrick) DuraLine Series CGL, Model: 2082G
b. (Bradley) Equivalent Product
2. Door/Panel Height: 71 3/4-inches
3. Floor Clearance: 4 1/2-inches
4. Mounting Configuration: Floor Mounted, Overhead Braced
a. Stile Height: 85-inches
5. Color: Custom; laminate facing as selected by Architect, laminate manufactures' s full range, including premium and special order colors, specialty laminate and textures.
6. Panel Thickness: Min. ¾-inch
7. Gap: Gap-Free Doors & Stiles
B. Solid Phenolic Urinal Privacy Screens
1. Manufacturer:
a. (Bobrick) DuraLine Series CGL, Model 1085
b. (Bradley) Equivalent Product
2. Screen Height: 48-inches
3. Floor Clearance: 12-inches
4. Mounting Configuration: Wall-Hung, continuous bracket
5. Color: Match Toilet Partitions
6. Panel Thickness: Min. ½-inch

2.05 EQUIPMENT
2.06 COMPONENTS

2.07 ACCESSORIES

A. Stiles: Floor-anchored stiles furnished with expansion shields and threaded rods.
   1. Leveling Devices: 7 gauge, 3/16 inches thick, corrosion-resistant, chromate-treated, double zinc-plated steel angle leveling bar bolted to stile; furnished with 3/8-inch diameter threaded rods, hex nuts, lock washers, flat washers, spacer sleeves, expansion anchors, and shoe retainers.
   2. Stile Shoes: One-piece, 22 gauge, 18-8, Type 304 stainless steel, 4-inch height; tops with 90-degree return to stile. One-piece shoe capable of adapting to 3/4 inch or 1-inch stile thickness and capable of being fastened (by clip) to stiles starting at wall line.

B. Wall Posts: Pre-drilled for door hardware, 18-8, Type 304, 16-gauge stainless steel with satin finish; 1-inch x 1-1/2 inches x 58 inches high.

C. Anchors: Expansion shields and threaded rods at floor connections as applicable. Threaded rods secured to supports above ceiling as applicable.

D. Hardware:
   1. Compliance: Operating force of less than 5 lb.
   2. Emergency Access: Hinges, latch allow door to be lifted over keeper from outside compartment on inswing doors.
   3. Materials: 18-8, Type 304, heavy-gauge stainless steel with satin finish.
   4. Doorstops: Prevents in swinging doors from swinging out beyond stile; on outswing doors, doorstop prevents door from swinging in beyond stile.
   5. Fastening: Hardware secured to door and stile by through-bolted, theft-resistant, pin-in-head Torx stainless steel machine screws into factory-installed, threaded brass inserts. Fasteners secured directly into core not acceptable.
      a. Threaded Brass Inserts: Factory-installed; withstand direct pull force exceeding 1500 lbs. per insert.
   6. Clothes Hooks: See section 10 28 00
   7. Door Hardware Type:
      a. Latching: 14 gauge sliding door latch, 11-gauge keeper; latch slides on a shock-resistant nylon track.
      b. Hinges: 16-gauge stainless steel, self-closing, 3 section hinges.
   8. Fittings:
      a. Mounting Brackets: 18-gauge stainless steel and extend full height of panel.
      b. U-Channels: Secure panels to stiles.
      c. Angle Brackets: Secure stiles-to-walls and panels to walls.

2.08 MIXES
2.09 FABRICATION
2.10 FINISHES
2.11 SOURCE QUALITY CONTROL

PART 3 EXECUTION

3.01 INSTALLERS
3.02 EXAMINATION
3.03 PREPARATION

A. Protection
B. Surface Preparation
    1. Prepare substrates including but not limited to blocking and supports in walls and ceilings at points of attachment using methods recommended by the manufacturer for achieving the best result for the substrates under the project conditions.
    2. Inspect areas scheduled to receive compartments for correct dimensions, plumbness of walls, and soundness of surfaces that would affect installation of mounting brackets.
    3. Verify spacing of plumbing fixtures to assure compatibility with installation of compartments.
    4. Do not proceed with installation until substrates have been properly prepared with blocking and supports in walls and ceilings at points of attachment and deviations from manufacturer's recommended tolerances are corrected. Commencement of installation constitutes acceptance of conditions.

3.04 ERECTION

3.05 INSTALLATION

A. Install products in strict compliance with manufacturer's written instructions and recommendations, including the following:
    1. Verify blocking and supports in walls and ceilings has been installed properly at points of attachment.
    2. Verify location does not interfere with door swings or use of fixtures.
    3. Use fasteners and anchors suitable for substrate and project conditions.
    4. Install units rigid, straight, plumb, and level.
    5. Conceal evidence of drilling, cutting, and fitting to room finish.
    6. Test for proper operation.

3.06 APPLICATION

3.07 CONSTRUCTION

3.08 REPAIR/RESTORATION

A. Touch-up, repair or replace damaged products.

3.09 RE-INSTALLATION

3.10 FIELD QUALITY CONTROL

3.11 ADJUSTING

A. Adjust hardware for proper operation after installation.
B. Set hinge cam on in-swinging doors to hold doors open when unlatched.
C. Set hinge cam on out-swinging doors to hold unlatched doors in closed position.

3.12 CLEANING

A. Clean exposed surfaces of compartments, hardware, and fittings.

3.13 DEMONSTRATION

3.14 PROTECTION

3.15 SCHEDULES

END OF SECTION

SECTION 10 26 13
CORNER GUARDS

PART 1 GENERAL

1.01 SUMMARY
- A. Section Includes
  1. Stainless Steel Corner Guards, See Part 3, 3.15 for Quantities.
  2. Adhesive
- B. Products Supplied But Not Installed Under This Section
- C. Products Installed But Not Supplied Under This Section
- D. Related Sections
- E. Allowances
- F. Unit Prices
- G. Measurement Procedures
- H. Payment Procedures
- I. Alternates

1.02 REFERENCES
1.03 DEFINITIONS
1.04 SYSTEM DESCRIPTIONS
1.05 SUBMITTALS
- A. General
- B. Product Data
  1. Submit manufacturer's product data for each item specified.
- C. Shop Drawings
  1. Prepare shop drawings in .dwg format, published in .pdf format using base sheets provided electronically by the architect.
  2. Submit plans, product details, installation details, and relationship to adjacent work/adhering substate.
  3. Submit schedule for all corner guards, using same room designations as indicated on the drawings and include quantities and sizes with references to mounting details.
- D. Samples
  1. Submit 12-inch long sample of each color/finish specified.
- E. Quality Assurance/Control Submittals
  1. Design Data, Test Reports, Certificates, Manufacturers' Instructions, Manufacturers' Field Reports, Qualification Statements
- F. Closeout Submittals

1.06 QUALITY ASSURANCE
1.07 DELIVERY, STORAGE, AND HANDLING
- A. Packing, Shipping, Handling, and Unloading
  1. Deliver materials to site in manufacturer's original, unopened containers and packaging with labels clearly identifying product name and manufacturer.
- B. Acceptance at Site
- C. Storage and Protection
  1. Store materials in a clean, dry location protected against damage of any kind.
- D. Waste Management and Disposal

1.08 PROJECT CONDITIONS
1.09 SEQUENCING
1.10 SCHEDULING
1.11 WARRANTY
1.12 SYSTEM STARTUP
1.13 OWNER'S INSTRUCTIONS
1.14 COMMISSIONING
1.15 MAINTENANCE

PART 2 PRODUCTS

2.01 MANUFACTURERS
- A. Koroseal Interior Products, 3875 Embassy Parkway, Fairlawn, Ohio 44333, or equal.
- B. Construction Specialties, 6696 Route 405 Highway, Muncy, PA 17756
- C. IPC Door and Wall protection Systems, Inpro Corp., PO Box 406 Muskego, WI, 53150.

2.02 EXISTING PRODUCTS
2.03 MATERIALS
- A. (Koroseal) Surface Mounted Corner Guards
  1. Material: 16-gauge, type 304 stainless steel
  2. Finish: #4 Satin
  4. Angle: 90-degree
  5. Leg Length: 3 1/2-inch
  6. Bend Radius: 1/8-inch
  7. Height: 48-inches
  8. Mounting: Adhesive
- B. (C/S) CO-8
- C. (Inpro) Stainless Steel Corner Guards

2.04 MANUFACTURED UNITS
2.05 EQUIPMENT
2.06 COMPONENTS
2.07 ACCESSORIES
- A. Adhesive
  1. Field applied heavy duty construction adhesive.

2.08 MIXES
2.09 FABRICATION
2.10 FINISHES
2.11 SOURCE QUALITY CONTROL

PART 3 EXECUTION

3.01 INSTALLERS
3.02 EXAMINATION
- A. Site Verification of Conditions
  1. Examine areas and conditions in which the corner guard system will be installed.
  2. Verify all finishing operations, including painting, have been finished before beginning installation of corner guards.

3. Do not begin installation until unacceptable conditions have been corrected.

3.03 PREPARATION
- A. Protection
- B. Surface Preparation
  1. Clean substrate to remove any dust, debris, and loose particles.

3.04 ERECTION

3.05 INSTALLATION
- A. Install corner guards to wall securely using mastic construction adhesive.
- B. Install corner guards accurately in location, alignment, and elevation indicated on drawings.
- C. Apply a bead of heavy duty adhesive in a zigzag pattern over the back of each wing of the corner guard.
- D. Position corner guard on the wall and apply pressure until a tight fit is achieved.

3.06 APPLICATION

3.07 CONSTRUCTION

3.08 REPAIR/RESTORATION

3.09 RE-INSTALLATION

3.10 FIELD QUALITY CONTROL

3.11 ADJUSTING

3.12 CLEANING

3.13 DEMONSTRATION

3.14 PROTECTION
- A. Leave factory applied protective plastic coverings till substantial completion of project.

3.15 SCHEDULES
- A. Building ‘A’
  1. Room A-05 OFFICE, quantity (2)

END OF SECTION

SECTION 10 28 00
TOILET, BATH, AND LAUNDRY ACCESSORIES

PART 1 GENERAL

1.01 SUMMARY
- A. Section Includes
  - 1. Washroom accessories as scheduled in this section and as indicated on the drawings, including but not limited to the following:
    - a. Mirrors
    - b. Soap Dispensers
    - c. Grab Bars
    - d. Toilet Seat Cover Dispensers
    - e. Toilet Tissue Dispensers
    - f. Sanitary Napkin Disposal
    - g. Coat Hooks
    - h. Shower Seats (ADA Compliant)
    - i. Hand Dryers
    - j. Shower Curtain
    - k. Shower Curtain Rod
    - l. Shower Curtain Hooks
- B. Products Supplied But Not Installed Under This Section
- C. Products Installed But Not Supplied Under This Section
- D. Related Sections
  - 1. 03 30 00 Tiling
  - 2. 10 21 13 Toilet Compartments
- E. Allowances
- F. Unit Prices
- G. Measurement Procedures
- H. Payment Procedures
- I. Alternates

1.02 REFERENCES

1.03 DEFINITIONS

1.04 SYSTEM DESCRIPTIONS

1.05 SUBMITTALS
- A. General
- B. Product Data
  - 1. Submit manufacturer's data sheets for each product specified, including the following:
    - a. Installation instructions and recommendations.
    - b. Storage and handling requirements and recommendations.
    - c. Cleaning and maintenance instructions.
    - d. Replacement parts information.
- C. Shop Drawings
  - 1. Submit a toilet accessory schedule, indicating the type and quantity to be installed in each washroom. Use room numbers as indicated on the Drawings.
- D. Samples
- E. Quality Assurance/Control Submittals
  - 1. Design Data, Test Reports, Certificates, Manufacturers' Instructions, Manufacturers' Field Reports, Qualification Statements

F. Closeout Submittals

1.06 QUALITY ASSURANCE
A. Qualifications
1. Provide products manufactured by a company with a minimum of 10 years successful experience manufacturing similar products.
2. To the greatest extent possible provide products from a single manufacturer.
B. Regulatory Requirements
1. Elements of Sanitary facilities shall be mounted at locations in compliance with **CBC Sections 11B-602 through 11B-612.**
2. Grab bars in toilet facilities and bathing facilities shall comply with **CBC Section 11B-609**. Grab bars and any wall or other surfaces adjacent to grab bars shall be free of sharp or abrasive elements and shall have rounded edges. The space around the grab bars shall be as follows:
a. 1-1/2″ between the grab bar and the wall.
b. 1-1/2″ minimum between the grab bar and projecting objects below and at the ends.
c. 12″ minimum between the grab bar and projecting objects above.
C. Certifications
D. Field Samples
E. Mock-ups
F. Pre-installation Meetings

1.07 DELIVERY, STORAGE, AND HANDLING
A. Packing, Shipping, Handling, and Unloading
1. Deliver and handle materials and products in strict compliance with manufacturer's instructions and recommendations.
2. Deliver items in manufacturer's original unopened protective packaging.
B. Acceptance at Site
C. Storage and Protection
1. Store and handle materials and products in strict compliance with manufacturer's instructions and recommendations.
2. Protect from damage.
3. Store materials in original protective packaging to prevent soiling, physical damage or wetting.
4. Maintain protective covers on all units until installation is complete. Remove covers at final clean-up of installation.
D. Waste Management and Disposal

1.08 PROJECT CONDITIONS
1.09 SEQUENCING
1.10 SCHEDULING
1.11 WARRANTY
A. Manufacturer’s standard term warranty for materials and workmanship.

1.12 SYSTEM STARTUP
1.13 OWNER’S INSTRUCTIONS
1.14 COMMISSIONING
1.15 MAINTENANCE

PART 2 PRODUCTS

2.01 MANUFACTURERS

A. Mirrors, Toilet Accessories, Coat Hooks, ADA Shower Seats, Shower Curtain/Hooks/Rod, Soap Dispensers

1. Bobrick Washroom Equipment, Inc., 6901 Tujunga Avenue, North Hollywood, CA 91605, or equal.
2. Bradley Corporation, W142 N9101 Fountain Boulevard, Menomonee Falls, WI 53051
3. American Specialties, Inc., 441 Saw Mill River Road, Yonkers, NY 10701

B. Hand Dryers

1. Dyson Inc., 1330 West Fulton Street, 5th Floor, Chicago, IL 60607

2.02 EXISTING PRODUCTS

2.03 MATERIALS

2.04 MANUFACTURED UNITS

A. Mirrors

1. Manufacturer's Model:
   a. (Bobrick) B-2908
   b. (Bradley) Equivalent Product
   c. (ASI) Equivalent Product
2. Size: 18-inch W x 36-inch H
3. Glass: Tempered
4. Frame: Welded Corners
5. Frame Material: Type 304 stainless steel
6. Finish: Satin

B. Soap Dispensers

1. Manufacturer's Model:
   a. (Bobrick) B-2111
   b. (Bradley) Equivalent Product
   c. (ASI) Equivalent Product
2. Material: Type 304 Stainless Steel
3. Mounting: Surface mount

C. Grab Bars

1. Manufacturer's Model:
   a. (Bobrick) B-5806
   b. (Bradley) Equivalent Product
   c. (ASI) Equivalent Product
2. Size: 1 1/4-inch outside diameter (O.D.) x 36-inch, 42-inch, 48-inch models where indicated on drawings
3. Material: Type 304 stainless steel
4. Finish: Satin
5. Mounting: Concealed
6. Metal Stud Wall Mounting: provide manufacturer's optional mounting kit for 3 round-head sheet-metal screws at each flange.
7. Toilet Compartment Panel Mounting: provide manufacturer's mounting kit for anchorage to toilet compartment panels,
   a. Panel Thickness: ¾-inch to 1-inch

b. Plate Material: 18-8, Type 304, 16 gauge stainless steel
c. Screws: ¼-in-20 Phillips Stainless Steel Machine Screw
d. Nuts: Chrome plated brass

D. Toilet Seat Cover Dispensers
1. Manufacturer's Model:
a. (Bobrick) B-221
b. (Bradley) Equivalent Product
c. (ASI) Equivalent Product
2. Material: Type 304 stainless steel
3. Finish: Satin
4. Mounting: Surface Mounted

E. Toilet Tissue Dispensers
1. Manufacturer's Model:
a. (Bobrick) B-2888
b. (Bradley) Equivalent Product
c. (ASI) Equivalent Product
2. Material: Type 304 stainless steel
3. Finish: Satin
4. Mounting: Surface Mounted

F. Toilet Tissue Dispensers (Accessible Stalls)
1. Manufacturer's Model:
a. (Bobrick) B-3888
b. (Bradley) Equivalent Product
c. (ASI) Equivalent Product
2. Material: Type 304 stainless steel
3. Finish: Satin
4. Mounting: Recessed Mounted

G. Sanitary Napkin Disposal
1. Manufacturer's Model:
a. (Bobrick) B-254
b. (Bradley) Equivalent Product
c. (ASI) Equivalent Product
2. Material: Type 304 stainless steel
3. Finish: Satin
4. Mounting: Surface Mounted

H. Sanitary Napkin Disposal (Accessible Stalls)
1. Manufacturer's Model:
a. (Bobrick) B-353
b. (Bradley) Equivalent Product
c. (ASI) Equivalent Product
2. Material: Type 304 stainless steel
3. Finish: Satin
4. Mounting: Recessed Mounted

I. Coat Hooks
1. Manufacturer's Model:
a. (Bobrick) B-6827
b. (Bradley) Equivalent Product

c. (ASI) Equivalent Product
2. Material: Type 304 stainless steel
3. Finish: Satin
4. Mounting: Concealed Wall Plate

J. Shower Seats (ADA Compliant)
1. Manufacturer's Model:
a. (ASI) 8203-33
b. (Bradley) Equivalent Product
c. (Bobrick) Equivalent Product
2. Material: Type 304 stainless steel
3. Finish: Satin
4. Mounting: Surface Mounted

K. Hand Dryers
1. (Dyson) Airblade V
a. Color: Sprayed Nickel

L. Shower Curtain
1. Manufacturer's Model:
a. (Bobrick) B-204-3
b. (Bradley) Equivalent Product
c. (ASI) Equivalent Product
2. Material: Vinyl

M. Shower Rod
1. Manufacturer's Model:
a. (Bobrick) B-6107 CUSTOM SIZE to fit
b. (Bradley) Equivalent Product
c. (ASI) Equivalent Product
2. Material: Type 304 stainless steel
3. Finish: Satin
4. Mounting: Surface Mounted

N. Shower Curtain Hooks
1. Manufacturer's Model:
a. (Bobrick) B-204-1
b. (Bradley) Equivalent Product
c. (ASI) Equivalent Product
2. Material: Type 304 stainless steel

2.05 EQUIPMENT
2.06 COMPONENTS
2.07 ACCESSORIES
2.08 MIXES
2.09 FABRICATION
2.10 FINISHES
2.11 SOURCE QUALITY CONTROL

PART 3 EXECUTION

3.01 INSTALLERS
3.02 EXAMINATION

A. Site Verification of Conditions
   1. Check wall opening for correct dimensions, plumbness of blocking or frames, and other preparation that would affect installation of accessories.
   2. Check areas to receive surface-mounted items for conditions that would affect quality and execution of work.
   3. Verify spacing of plumbing fixtures and toilet partitions that affect installation of accessories.
   4. Do not begin installation of washroom accessories until openings and surfaces are acceptable.

3.03 PREPARATION
3.04 ERECTION
3.05 INSTALLATION
A. Install products in strict compliance with manufacturer's written instructions and recommendations, including the following:
   1. Verify blocking has been installed properly.
   2. Verify location does not interfere with door swings or use of fixtures.
   3. Comply with manufacturer's recommendations for backing and proper support.
   4. Use fasteners and anchors suitable for substrate and project conditions
   5. Install units rigid, straight, plumb, and level, in accordance with manufacturer's installation instructions and approved shop drawings.
   6. Fit flanges of accessories snug to wall surfaces. Provide caulking in gaps between 90 degrees. return flanges and finish wall surface after accessories are installed.
   7. Conceal evidence of drilling, cutting, and fitting to room finish.
   8. Test for proper operation.

3.06 APPLICATION
3.07 CONSTRUCTION
3.08 REPAIR/RESTORATION
3.09 RE-INSTALLATION
3.10 FIELD QUALITY CONTROL
3.11 ADJUSTING
3.12 CLEANING
A. Clean exposed surfaces of compartments, hardware, and fittings using methods acceptable to the manufacturer.

3.13 DEMONSTRATION
3.14 PROTECTION
A. Touch-up, repair or replace damaged products until Substantial Completion.

3.15 SCHEDULES

END OF SECTION

SECTION 10 44 16
FIRE EXTINGUISHERS AND EXTINGUISHER CABINETS

PART 1 GENERAL

1.01 SUMMARY
- A. Section Includes
  1. Fire Extinguishers
  2. Fire Extinguisher Cabinets
  3. Accessories
- B. Products Supplied But Not Installed Under This Section
- C. Products Installed But Not Supplied Under This Section
- D. Related Sections
- E. Allowances
- F. Unit Prices
- G. Measurement Procedures
- H. Payment Procedures
- I. Alternates

1.02 REFERENCES
- A. ASTM E814-11a, Standard Test Method for Fire Tests of Penetration Firestop Systems.
- B. C.C.R., Title 19, Latest Edition
- C. C.C.R., Title 24, 2019 Edition
- D. Intertek Testing Services/Warnock-Hersey International (ITS/WHI)
- E. NFPA 10, Latest Edition, Standard for Portable Fire Extinguishers: For criteria covering installations for Class A, B, C, D, and K hazards as well as the selection, inspection, maintenance, recharging, and testing of portable fire extinguishing equipment.
- F. CEC, 2019, California Electrical Code.

1.03 DEFINITIONS

1.04 SYSTEM DESCRIPTIONS
- A. Design Requirements, Performance Requirements
  1. All fire extinguishers shall comply with C.C.R., Title 19, Division 1, Chapter 3.

1.05 SUBMITTALS
- A. General
- B. Product Data
  1. Cabinets
     a. Submit manufacturer's materials description for fire extinguisher cabinets include roughing-in dimensions, details showing mounting methods, relationships to surrounding construction, door hardware, cabinet type and materials, trim style and door construction, door style and materials.
  2. Extinguishers
     a. Submit manufacturer's materials description for fire extinguishers including ratings and classifications.
  3. Submit manufacturer's installation instructions for each product specified.
- C. Shop Drawings

1. Submit scaled plans showing locations of fire extinguisher cabinets and individual fire extinguishers.
2. Submit schedules showing each type of cabinet and extinguisher to ensure proper fit and function.
3. Indicate installation procedures and accessories required for a complete installation.

D. Samples
1. Submit manufacturer’s extinguisher cabinet door and trim finishes for each type of exposed finish required, prepared on samples of 6-inches square.

E. Quality Assurance/Control Submittals

F. Closeout Submittals

1.06 QUALITY ASSURANCE

A. Qualifications
1. Provide fire extinguishers, cabinets and accessories produced by a single manufacturer.

B. Regulatory Requirements
1. Provide fire extinguishers of type approved by UL, State Fire Marshal's Office, and local regulatory agencies, if any.
2. Fire-Rated, Fire Protection Cabinets shall be listed and labeled to comply with requirements in ASTM E814 for fire-resistance rating of walls where they are installed.
3. Fire Extinguisher Cabinets must comply with CBC Sections 11B-307, 11B-308, 11B-309, and 11B-403.

C. Certifications

D. Field Samples

E. Mock-ups

F. Pre-installation Meetings

1.07 DELIVERY, STORAGE, AND HANDLING

A. Packing, Shipping, Handling, and Unloading
1. Deliver components in manufacturer's original packaging, properly labeled for identification
2. Deliver and handle fire protection specialties and related materials using means and methods that will prevent damage, deterioration, or loss.

B. Acceptance at Site

C. Storage and Protection
1. Store fire protection specialties and related materials using means and methods that will prevent damage, deterioration, or loss

D. Waste Management and Disposal

1.08 PROJECT CONDITIONS

1.09 SEQUENCING

1.10 SCHEDULING

1.11 WARRANTY

A. Provide manufacturer’s standard one-year warranty after date of installation against defects in materials or workmanship.

1.12 SYSTEM STARTUP

1.13 OWNER’S INSTRUCTIONS

1.14 COMMISSIONING

1.15 MAINTENANCE

PART 2 PRODUCTS

2.01 MANUFACTURERS
- A. JL Industries, Inc., 9702 Newton Ave., Bloomington, MN 55431, or equal.
- B. Fire End & Crocker, 7 Westchester Plaza, Elmsford, NY 10523
- C. Larson's, 7421 Commerce Lane N.E., Minneapolis, MN 55432
- D. Potter Roemer,17451 Hurley Street, City of Industry, CA 91744

2.02 EXISTING PRODUCTS

2.03 MATERIALS

2.04 MANUFACTURED UNITS

2.05 EQUIPMENT
- A. Fire Extinguishers
  - 1. Multi-Purpose Chemical Type
    - a. Manufacturer's Model:
      1. (JL) Cosmic 10E
      2. (FE&C) 4010
      3. (Larsen's) MP10
      4. (Potter) 3010
    - b. UL Rating: 4A-80BC
    - c. Effectiveness Rating: Class A,B,C fires
    - d. Construction: Heavy duty steel cylinder with metal valve and siphon tube, O-ring seal, replaceable valve stem seal, visual pressure gage, pull pin and upright squeeze grip.
    - e. Finish: Factory powder coat, Red
    - f. Nominal Capacity: 10 lbs.
- B. Mounting Brackets
  - 1. Standard Brackets
    - a. Provide manufacturer's standard steel bracket, designed to secure fire extinguisher to wall or structure, of sizes required for types and capacities of fire extinguishers indicated.
- C. Fire Extinguisher Cabinet (Non-Fire Rated Stud Walls)
  - 1. Cabinet with Acrylic Bubble Door
    - a. Manufacturer's Model:
      1. (JL) Clear VU, size cabinet to extinguisher size.
      2. (FE&C) Canopy AL, size cabinet to extinguisher size.
      3. (Larsen's) Cameo, size cabinet to extinguisher size.
      4. (Potter) Loma, size cabinet to extinguisher size.
    - b. Cabinet Style: Fully Recessed
    - c. Trim: Flat
    - d. Components:
      1. Tub: Cold-rolled steel, standard color White
      2. Door and Trim: Aluminum, Factory-anodized, color as selected by Architect from both standard and optional colors.
      3. Door Style: Full glazing with theft-deterrent break-away replaceable cam, keyed cylinder lock, all locks keyed alike.
      4. Bubble: Acrylic with 2-1/2" projection, clear color.
    - e. Die Cut Lettering: ¾" x 18" vertical, red, 'FIRE EXTINGUISHER'
- D. Fire Extinguisher Cabinet (Fire Rated Stud Walls)

1. Cabinet with Acrylic Bubble Door
    a. Manufacturer's Model:
        1. (JL) Clear VU FX2, size cabinet to extinguisher size.
        2. (FE&C) FR Canopy AL, size cabinet to extinguisher size.
        3. (Larsen's) FS Cameo, size cabinet to extinguisher size.
        4. (Potter) Fire Rated Loma, size cabinet to extinguisher size.
    b. Cabinet Style: Fully Recessed
    c. Trim: Flat
    d. Components:
        1. Tub: Cold-rolled steel, standard color White
        2. Door and Trim: Aluminum, Factory-anodized, color as selected by Architect from both standard and optional colors.
        3. Door Style: Full glazing with theft-deterrent break-away replaceable cam, keyed cylinder lock, all locks keyed alike.
        4. Bubble: Acrylic with 2-1/2" projection, clear color.
    e. Cabinet Lettering:
        1. Die Cut Lettering: ¾" x 18" vertical, red, reading "FIRE EXTINGUISHER".
        2. Lettering shall be factory applied.

E. Fire Extinguisher Cabinet (CMU/Concrete Walls)
1. Cabinet with Acrylic Bubble Door
    a. Manufacturer's Model:
        1. (JL) Clear VU, size cabinet to extinguisher size.
        2. (FE&C) Canopy AL, size cabinet to extinguisher size.
        3. (Larsen's) Cameo, size cabinet to extinguisher size.
        4. (Potter) Loma, size cabinet to extinguisher size.
    b. Cabinet Style: Surface-Mounted Square Trim
    c. Trim: Flat
    d. Components:
        1. Tub: Cold-rolled steel, standard color White
        2. Door and Trim: Aluminum, Factory-anodized, color as selected by Architect from both standard and optional colors.
        3. Door Style: Full glazing with theft-deterrent break-away replaceable cam, keyed cylinder lock, all locks keyed alike.
        4. Bubble: Acrylic with 2-1/2" projection, clear color.
    e. Die Cut Lettering: ¾" x 18" vertical, red, 'FIRE EXTINGUISHER'
    f. Installation Screws: Install with stainless steel masonry screws at factory mounting locations, Simpson Strong-Tie Titen PFSS or equal.

2.06 COMPONENTS
2.07 ACCESSORIES
2.08 MIXES
2.09 FABRICATION
2.10 FINISHES
2.11 SOURCE QUALITY CONTROL

PART 3 EXECUTION

3.01 INSTALLERS
3.02 EXAMINATION
3.03 PREPARATION
3.04 ERECTION
3.05 INSTALLATION
- A. Install equipment in strict accordance with the manufacturer's instructions.

3.06 APPLICATION
3.07 CONSTRUCTION
3.08 REPAIR/RESTORATION
3.09 RE-INSTALLATION
3.10 FIELD QUALITY CONTROL
- A. Site Tests, Inspection
  1. Each extinguisher shall be fully charged
  2. Inspection of each extinguisher has shall be performed, as evidenced by the National Association of Fire Equipment Distributors certification tag, just prior to turnover.
- B. Manufacturers' Field Services

3.11 ADJUSTING
- A. Adjust fire protection cabinet doors to operate easily without binding. Verify that integral locking devices operate properly.

3.12 CLEANING
- A. Remove temporary protective coverings and strippable films, if any, as fire protection cabinets are installed unless otherwise indicated in manufacturer's written installation instructions.
- B. On completion of fire protection cabinet installation, clean interior and exterior surfaces as recommended by manufacturer.
- C. Touch up marred finishes or replace fire protection cabinets that cannot be restored to factory-finished appearance. Use only materials and procedures recommended or furnished by fire protection cabinet and mounting bracket manufacturers.
- D. Replace fire protection cabinets that have been damaged or have deteriorated beyond successful repair by finish touchup or similar minor repair procedures.

3.13 DEMONSTRATION
3.14 PROTECTION
3.15 SCHEDULES

END OF SECTION

SECTION 10 51 13
METAL LOCKERS

PART 1 GENERAL

1.01 SUMMARY
- A. Section Includes
  1. Metal Lockers – Two Tier
  2. Metal Lockers – Single Tier
  3. Metal Locker Accessories
- B. Products Supplied But Not Installed Under This Section
- C. Products Installed But Not Supplied Under This Section
- D. Related Sections
- E. Allowances
- F. Unit Prices
- G. Measurement Procedures
- H. Payment Procedures
- I. Alternates

1.02 REFERENCES

1.03 DEFINITIONS

1.04 SYSTEM DESCRIPTIONS

1.05 SUBMITTALS
- A. General
- B. Product Data
- C. Shop Drawings
  1. Submit shop drawings indicating locker sizes, locations, construction details, anchorage to substrate, and locker numbering layout. Indicate size and location of accessories, mounting heights of hardware, and ADA accessible locker locations.
- D. Samples
  1. Submit color chips of manufacturer's standard colors for selection by architect.
- E. Quality Assurance/Control Submittals
  1. Design Data, Test Reports, Certificates, Manufacturers' Instructions, Manufacturers' Field Reports, Qualification Statements
- F. Closeout Submittals

1.06 QUALITY ASSURANCE
- A. Qualifications
  1. Manufacturer shall have a minimum of 10 years manufacturing experience with metal locker fabrication.
- B. Regulatory Requirements
  1. At least 5%, but no fewer than one of each type of lockers shall comply with **CBC Section 11B-811**.
  2. All ADA accessible lockers shall have a permanent ISA symbol on the face of the door panel.
  3. Operable parts of ADA accessible lockers shall be operable with one hand and shall not require tight grasping, pinching, or twisting of the wrist. The force required to activate operable parts shall be 5 pounds (22.5N) maximum.
- C. Certifications

D. Field Samples
E. Mock-ups
1. Provide a mock-up for evaluation of surface preparation techniques and application workmanship.
a. Area to be designated by Architect. Minimum of (5) lockers.
b. Do not proceed with remaining work until workmanship is approved by Architect.
c. Refinish mock-up area as required to produce acceptable work.
F. Pre-installation Meetings

1.07 DELIVERY, STORAGE, AND HANDLING
1.08 PROJECT CONDITIONS
1.09 SEQUENCING
1.10 SCHEDULING
1.11 WARRANTY
1.12 SYSTEM STARTUP
1.13 OWNER'S INSTRUCTIONS
1.14 COMMISSIONING
1.15 MAINTENANCE

PART 2 PRODUCTS

2.01 MANUFACTURERS
A. DeBourgh Manufacturing, 27505 Otero Ave, La Junta, CO 81050 or Equal.

2.02 EXISTING PRODUCTS
2.03 MATERIALS
2.04 MANUFACTURED UNITS
A. Two Tier: 18-inch D x 15-inch W x 72-inch T
1. (DeBourgh) CORE Athletic Locker
a. All Welded Body
b. Min. 14-ga. frame construction
c. Side Ventilation: Solid
d. Doors: Formed sheet, Diamond Perforation 37% Ventilation
e. Coat rod and brackets, each locker

B. Single Tier: 18-inch D x 15-inch W x 72-inch T (ADA Locker)
1. (DeBourgh) CORE Athletic Locker
a. All Welded Body
b. Min. 14-ga. frame construction
c. Side Ventilation: Solid
d. Doors: Formed sheet, Diamond Perforation 37% Ventilation
e. Coat rod and brackets, each locker

2.05 EQUIPMENT
2.06 COMPONENTS
2.07 ACCESSORIES
A. Latch Systems
a. Single Point Recessed (Non ADA lockers)
b. Built-in combination with digital keypad lock (ADA lockers)
C. Hinges (Typical All lockers)
a. 5-Knuckle Hinge, 14 Gauge, welded to frame

B. Accessories (Typical all lockers)
   a. Expansion Trim where indicated on drawings
   b. Flat Top corner fillers
   c. Aluminum number plates
   d. Matching color sloping tops

2.08 MIXES
2.09 FABRICATION
2.10 FINISHES
   A. All lockers shall receive a manufacturer's power coated finish with anti-graffiti finish. Color as selected by architect from manufacturer's standard options.

2.11 SOURCE QUALITY CONTROL

PART 3 EXECUTION

3.01 INSTALLERS
   A. Installer shall be trained and certified by the manufacturer.

3.02 EXAMINATION
3.03 PREPARATION
3.04 ERECTION
3.05 INSTALLATION
   A. Install in strict accordance with manufacturer's installation instructions.
   B. Assembly shall be by riveting
   C. Safely and securely anchor all lockers to walls as detailed on drawings.
   D. Install all number plates in sequence after all lockers have been installed.

3.06 APPLICATION
3.07 CONSTRUCTION
3.08 REPAIR/RESTORATION
3.09 RE-INSTALLATION
3.10 FIELD QUALITY CONTROL
3.11 ADJUSTING
   A. Upon completion of installation, inspect lockers and adjust as necessary for proper door opening and closing. Adjust as required for smooth operation.
   B. Touch-up scratches and abrasions to match original finish.

3.12 CLEANING
3.13 DEMONSTRATION
3.14 PROTECTION
3.15 SCHEDULES

END OF SECTION

SECTION 12 21 23
ROLL-DOWN BLINDS

PART 1 GENERAL

1.01 SUMMARY
- A. Section Includes
  - 1. Roll-down Blinds
- B. Products Supplied But Not Installed Under This Section
- C. Products Installed But Not Supplied Under This Section
- D. Related Sections
- E. Allowances
- F. Unit Prices
- G. Measurement Procedures
- H. Payment Procedures
- I. Alternates

1.02 REFERENCES

1.03 DEFINITIONS

1.04 SYSTEM DESCRIPTIONS
- A. Design Requirements, Performance Requirements
  - 1. Provide manually operated, sunscreen roller shades

1.05 SUBMITTALS
- A. General
- B. Product Data
  - 1. Submit manufacturer's data sheets for each product specified, including:
    - a. Preparation instructions and recommendations.
    - b. Styles, material descriptions, dimensions of individual components, profiles, features, finishes and operating instructions.
    - c. Storage and handling requirements and recommendations.
    - d. Mounting details and installation methods.
- C. Shop Drawings
  - 1. Prepare shop drawings in .dwg format, published in .pdf format using base sheets provided electronically by the architect.
  - 2. Submit plans, elevations, sections, product details, installation details, operational clearances, and relationship to adjacent work.
  - 3. Submit window treatment schedule for all roller shades, using same room designations as indicated on the drawings and include opening sizes with references to mounting details.
- D. Samples
  - 1. Submit manufacturer's samples for each finish product specified, one complete set of shade components, unassembled, demonstrating compliance with specified requirements. Shade cloth samples and aluminum finish sample as selected. Mark face of material to indicate interior faces.
- E. Quality Assurance/Control Submittals
  - 1. Design Data, Test Reports, Certificates, Manufacturers' Instructions, Manufacturers' Field Reports, Qualification Statements
- F. Closeout Submittals

1. Submit manufacturer's methods for maintaining roller shades, precautions regarding cleaning materials and methods, instructions for operating hardware and controls.

1.06 QUALITY ASSURANCE

A. Qualifications
   1. Obtain all roller shades system through one source from a single manufacturer with a minimum of ten years' experience and minimum of five projects of similar scope and size in manufacturing products comparable to those specified in this section. This includes but is not limited to all required extrusions, accessories, controls and fabricated roller shades
   2. Installer shall be trained and certified by the manufacturer with a minimum of ten years' experience in installing products comparable to those specified in this section.

B. Regulatory Requirements
   1. Fire-Test-Response Characteristics: NFPA 701-99 small and large-scale vertical burn compliant. Materials tested shall be identical to products proposed for use.
   2. Operable parts and controls at unobstructed forward and side approach located at 48" to top of device: For reach requirements at other conditions, comply with 11B-308 as they apply. Operable parts shall be operable with one hand and shall not require tight grasping, pinching, or twisting of the wrist. The force required to activate operable parts shall be 5 pounds maximum. Operable parts shall also comply with CBC sections 11B-308.2, 11B-308.3, and 11B-309.4.

C. Certifications
   1. Shade cloth Anti-Microbial Characteristics: 'No Growth' per ASTM G 21 results for fungi ATCC9642, ATCC 9644, and ATCC9645.
   2. Shade cloth shall be PVC-Free

D. Field Samples

E. Mock-ups
   1. Provide a mock-up of one roller shade assembly for evaluation of mounting, appearance and accessories.
   2. Locate mock-up in window designated by Architect.
   3. Do not proceed with remaining work until, mock-up is accepted by Architect.

F. Pre-installation Meetings

1.07 DELIVERY, STORAGE, AND HANDLING

A. Packing, Shipping, Handling, and Unloading
   1. Deliver components in factory-labeled packages, marked with manufacturer and product name, fire-test-response characteristics, and location of installation using same room designations indicated on Drawings and in the Window Treatment Schedule.

B. Acceptance at Site

C. Storage and Protection

D. Waste Management and Disposal

1.08 PROJECT CONDITIONS

A. Project Environmental Requirements

1. Install roller shades after finish work including painting is complete and ambient temperature and humidity conditions are maintained at the levels indicated for Project when occupied for its intended use.

B. Existing Conditions

1.09 SEQUENCING
1.10 SCHEDULING
1.11 WARRANTY
1.12 SYSTEM STARTUP
1.13 OWNER'S INSTRUCTIONS
1.14 COMMISSIONING
1.15 MAINTENANCE

PART 2 PRODUCTS

2.01 MANUFACTURERS
A. MechoSystems, 42-03 35th Street, Long Island City, NY 11101, or equal.

2.02 EXISTING PRODUCTS
2.03 MATERIALS
2.04 MANUFACTURED UNITS
A. Roll Down Blinds
1. Mecho/5
a. Drive-end Bracket
b. Provide aluminum fascia and end closures, color as selected by architect.
c. Provide Wall mount angle bracket (2-7/8" x 2-7/8" x 1/8")
B. Shade Cloth
1. ThermoVeil Basket Weave, opacity to be selected by architect.
2. Color as selected by architect.

2.05 EQUIPMENT
2.06 COMPONENTS
2.07 ACCESSORIES
2.08 MIXES
2.09 FABRICATION
2.10 FINISHES
2.11 SOURCE QUALITY CONTROL

PART 3 EXECUTION

3.01 INSTALLERS
3.02 EXAMINATION
A. Site Verification of Conditions
1. Do not begin installation until substrates have been properly prepared. If substrate preparation is the responsibility of another installer, notify Architect of unsatisfactory preparation before proceeding.

3.03 PREPARATION
A. Protection

B. Surface Preparation
   1. Clean surfaces thoroughly prior to installation. Prepare surfaces using the methods recommended by the manufacturer for achieving the best result for the substrate under the project conditions.

3.04 ERECTION

3.05 INSTALLATION
A. Install in strict accordance with manufacturer's published instructions by a factory trained installer.

3.06 APPLICATION
3.07 CONSTRUCTION
3.08 REPAIR/RESTORATION
3.09 RE-INSTALLATION
3.10 FIELD QUALITY CONTROL
3.11 ADJUSTING
3.12 CLEANING
3.13 DEMONSTRATION
3.14 PROTECTION
A. Protect installed products until completion of project.
B. Touch-up, repair or replace damaged products before Substantial Completion.

3.15 SCHEDULES
A. Provide Roll-Down Blinds at the following openings:
   1. Building 'A'
      a. Opening (Omit Door): WW-A5.1

   2. Building 'B'
      a. Opening (Omit Door): WW-B3.1
      b. Opening (Omit Door): WW-B3.2
      c. Opening: B-03.3
      d. Opening: B-03.4
      e. Opening: B-03.5

END OF SECTION

SECTION 12 36 16

STAINLESS STEEL COUNTERTOPS

PART 1 - GENERAL

1.01 SUMMARY

A. Stainless steel fabrications, including countertops.

B. Plumbing, including faucets, drains and fittings for sinks built into countertops.

1.02 RELATED SECTIONS

A. Division 1 Section - Product Requirements: Conditions for acceptance of products by manufacturers and for substitutions. Unless specifically noted, no substitutions will be considered.

D. Division 5 Section - Metal Fabrications: Metal supports and anchors to concrete and masonry

C. Division 7 Section - Joint Sealers/Sealants: Joint sealing for weather tightness, waterproofing and acoustical seals

D. Divisions 22 & 23 Section - Basic Mechanical Requirements: General requirements, in addition to those specified, as applicable to plumbing.

E. Divisions 22 & 23 Section - Supports, Anchors and Seals: General requirements for supports and anchors for pipe systems for countertops/sinks.

1.03 REFERENCE STANDARDS

A. ASTM A1011/A1011M - Standard Specification for Steel, Sheet and Strip, Hot-Rolled, Carbon, Structural, High-Strength Low-Alloy, High-Strength Low-Alloy with Improved Formability, and Ultra-High Strength; 2016.

B. ASTM A666 - Standard Specification for Annealed or Cold-Worked Austenitic Stainless Steel Sheet, Strip, Plate, and Flat Bar; 2016.

C. ASTM C920 - Standard Specification for Elastomeric Joint Sealants; 2016.

1.04 SUBMITTALS

A. General: The design documents are not acceptable as submittal set.

1. Submit electronic version (PDF) of each Drawing document. Prepare drawings at the following minimum scales:
   a. Plans 1/4-inches = 1-foot-0-inches
   b. Elevations 1/2-inches = 1-foot-0-inches
   c. Sections 1/2-inches = 1-foot-0-inches
2. Submit electronic version (PDF) of Product Data.
3. Forward complete submittal package to expedite review and avoid construction delay. Incomplete submittals will not be reviewed.
4. After return of reviewed submittal, make revisions as necessary and resubmit as required.

B. Drawings:

1. Submit dimensioned rough-in drawings of the project site showing Plumbing Service requirements. Drawings to indicate rough-in parameters for services based on specified equipment. Provide final exact locations, dimensions and characteristics of service and connections to suit requirements.
2. Submit dimensioned fabrication drawings for custom fabricated equipment including plans, elevations, and sections, showing materials and gauges used.

C. Product Data:
1. Cover Sheet: The Cover Sheet must contain the following information to be valid and complete:
   a. Manufacturer
   b. Model number
   c. Quantity
   d. Construction methods and materials
   e. Furnished accessories
   f. Installation methods and instructions
   g. Water and drainage requirements
   h. Service connection requirements
   i. Finishes

D. Samples: Submit 8-inch squares of materials and 12-inch lengths of running members and trim for all exposed finishes, and for custom fabricated equipment.

1.05 QUALITY ASSURANCE

A. Manufacturers' Qualifications: Firms shall have been regularly engaged in the manufacture of stainless steel countertops of the types, capacities, and sizes required, whose products have been in satisfactory use in similar service for no fewer than five (5) projects.

B. Installer's Qualifications: Installer shall have completed no fewer than five (5) Installations similar in material, design, and extent to that indicated for this Project, which have resulted in satisfactory in-service performance.

C. Codes and Standards:
1. NSF Standards: Comply with applicable National Sanitation Foundation (NSF) standards and recommended criteria including NSF 2 and NSF 7.
2. Accessibility
   a. Where provided, sales counters, food service lines, queues, and waiting lines shall comply with CBC Section 11B-227 and 11B-904.
   b. The top of tray slides shall be 28 inches minimum and 34 inches maximum above the finish floor or ground.
   c. Countertops required to be accessible shall conform to all reach requirements in CBC Figures 11B-308.2.1 - 11B-308.3.2 (CBC Section11B-308).
3. Space and elements within employee work areas shall meet the requirements of CBC Section 11B-203.9.
4. Welding per California Fire Code Chapter 35

1.06 DELIVERY, STORAGE, AND HANDLING

A. Delivery: Deliver countertops in containers designed to protect the countertops and finish until installation.

B. Storage: Store countertops in the original containers and in a location to provide adequate protection to equipment while not interfering with other construction operations.

C. Handling: Handle countertops carefully to avoid damage to components, enclosures, and finish. Do not install damaged countertops. Replace and return damaged components to the Manufacturer.

1.07 PROJECT CONDITIONS

A. Field Measurements: Take field measurements before ordering and fabrication, to assure accurate fit of fabricated countertops.

1.08 SUBSTITUTION

A. Substitution of Materials and Equipment: Whenever a material, article, or piece of equipment is identified on the Drawings or in the Specifications by reference to manufacturers' or vendors' names, trade name, catalog numbers, or the like, it is so identified for the purpose of establishing a standard. Substitute items shall be submitted to District at least ten days before bid date for review and consideration. Items that are acceptable (with District's written approval) shall be so stated in an Addendum.

1.09 WARRANTIES

A. The warranty period for all items furnished shall be guaranteed against defects in workmanship and material for a minimum period of two (2) years. This warranty shall include both Parts and Labor.

B. The Contractor shall be responsible for returning all warranty cards to the Manufacturers as required. Should he fail to return the warranty cards, the Contractor shall be responsible for providing the same warranty to the District as required by the Manufacturer.

PART 2 - PRODUCTS

2.01 MATERIALS

A. Stainless Steel: Provide ASTM A666 / AISI Type 304 non-magnetic sheets, free of buckles, waves, and surface imperfections; Blend and re-grain as required to effect matching and continuous finished product..

1. Finish for exposed surfaces to be No. 4 polished, unless specified otherwise.
2. Protective covering shall be provided on all polished surfaces of stainless steel sheet work, and retained and maintained until time of final testing, cleaning, start-up, and Substantial Completion.

B. Sound Deadening: Provide coating of sound deadening material at underside of all stainless steel tops and sinks. Sound deadening material to consist of NSF component smooth flowing Latex Sound Deadener, which is non-aging, does not become brittle and may be painted when dry.

C. Sealants: Provide ASTM C920, Type S, Grade NS, Class 25, Use NT. When fully cured and washed, sealant shall meet the requirements of the Food and Drug Administration Regulation 21 CFR 177.2600 for use in areas where sealant comes in contact with food.

1. The District will select the color from the manufacturer's standard colors.
2. Backer Rod shall be closed-cell polyethylene rod stock, larger than joint width.

D. Gaskets: Provide solid or hollow (not cellular) neoprene or PVC light gray gaskets, minimum 40 Shore A hardness, self-adhesive or prepared for either adhesive application or mechanical anchorage.

2.02 WELDING

A. Welding must comply with California Fire Code Chapter 35.

B. All welding shall utilize the heliarc method with welding rod of the same composition as the sheets or parts to be joined.

C. Welds shall be complete, strong and ductile with all excess metal ground and joints finished smooth to match adjoining surfaces.

D. Welds shall be free of mechanical imperfections such as gas holes, pits, cracks, etc., and shall be continuously welded so that the fixtures shall appear as one-piece construction.

E. Butt welds made by spot solder and finished by grinding shall not be acceptable.

F. Spot welds shall have a maximum space of at least 1/4-inch length of the welding material at a maximum space of 4-inches from center to center. Weld spacing at the ends of the channel battens shall not exceed 2-inch centers.

G. In no case shall soldering be considered as a replacement for welding, nor shall any soldering operation be done where dependence is placed on stability and strength of the joint.

H. Welds made of spot-welding straps under seams and filling in with solder will not be acceptable.

I. Countertops shall be shop fabricated of one piece and shipped to the job completely assembled whenever possible. Countertops too large to transport or enter the building as one piece shall be constructed so that the field joints can be welded at the job site.

J. All body joints made in the field shall be closely butted together, pulled together in the field and tightly belted on the inside or a concealed location.

K. All exposed joints shall be ground flush with adjoining material and finished to harmonize therewith.

L. Whenever material has been sunk or depressed by welding operation, such depression shall be suitably hammered and peened flush with the adjoining surface and, if necessary, again ground to eliminate low spots. In all cases, the grain of rough grinding shall be removed by successive fine polishing operations.

M. All unexposed welded joints in stainless steel construction shall be suitably coated at the factory with an approved metallic based paint.

N. Butt joints and contact joints, wherever they occur, shall be close fitting and shall not require a filler. Wherever sheared edges occur, they shall be free of burrs, fins, and irregular projections, and shall be finished to obviate all danger of cutting or laceration when the hand is drawn over them. In no case shall overlapping materials be acceptable where miters or bull nosed corners occur.

O. The grain of polishing shall run in the same direction on all horizontal and on all vertical surfaces of each item of fabricated equipment except in the case where the finish of the horizontal sections of each shall terminate in a mitered edge. Where sinks and adjacent drainboards are equipped with a splash, the grain of polishing shall be consistent in the direction throughout the length of the splash and sink compartment.

P. Bolts, screws, nuts and washers shall be of steel, except where brass or stainless steel is fastened, in which case they shall be of brass or stainless steel, respectively. Screws shall be 2-inch long, pan head Philips No. 12. Where dissimilar metals are fastened, nuts, bolts, screws and washers shall be of similar grade metal. The spacing and extent of bolts and screws shall be such as to ensure suitable fastening and prevent buckling of the metals fastened.

2.03 PLUMBING

A. All water supply units are to be fitted with mixing valve and pressure-reducing valve (per manufacturer requirements), to be supplied by the Plumbing Contractor and installed by the Plumbing Contractor.

B. All counter-top equipment requiring water connections must be provided with pressure-reducing valve per 2019 California Plumbing Code (CPC).

2.04 CUSTOM FABRICATED COUNTERTOPS

A. Manufacturers:

1. Crown Steel, 177 Newport Dr., San Marcos CA 92069
2. Eagle Group, 100 Industrial Blvd, Clayton, DE 19938
3. Advance Tabco, 200 Heartland Blvd, Edgewood, NY 11717

B. General:

1. Fasteners: No exposed screw or bolt heads will be acceptable. Rivets, if specified, shall be countersunk and ground flush, and of the same material as the pieces joined together. Butt joints made by riveting straps under seams and then filling with solder will not be accepted.
2. Rolled Edges: Rolled Edges shall be approximately 1-1/2-inch diameter, with corners bull nosed, ground and polished.
3. Bends: All horizontal and vertical corners shall be coved with radius bends of 1/2-inches or larger.
4. Corners: All corners shall be mitered and fully welded, ground, and polished. Butt joints at corners will not be accepted unless specified otherwise.
5. Closures: Provide formed stainless steel to close and finish all fixtures, backsplashes, or shelves, or entire rear of unit, or the ends flush to walls or adjoining fixtures. Closures shall be no greater than 1/8-inch gap between splash and wall.

C. Metal Tops:

1. Fabricate of 14-gauge stainless steel, one-piece welded construction, with exposed edges rolled and with corners bull nosed.

2. Reinforce on underside with stainless steel channels welded in place so tops can support heavy weights without deflection. Provide cross braces at not more than 30-inches on center.
3. Where tops are adjacent to walls or adjoining equipment, provide integral splashes with all corners, both vertical and horizontal, coved a minimum of 1/2-inch radius.
4. Splashes shall be a minimum of 6-inches high including a 1-inch horizontal return to wall and 1-inch vertical drop (for 'Z' clip installation) and enclosed ends.
5. Field joints in tops are to be sanitary, tight and without open seams, by means of welding or by properly designed draw fastenings, or commercial joint material to suit the purpose required; 1/8-inch tolerance for silicone maximum.
6. For countertop equipment, provide hydraulic knock out and grommet for utility lines at countertop or sides or rear.

D. Sinks:

1. Fabricate from 14-gauge stainless steel, with interior corners rounded to a 1-inch radius, both horizontally and vertically, forming cove in bottom.
2. Construct sink with butt-edge joints welded, ground smooth and polished so joints are imperceptible.
3. Finish sinks to match stainless steel top. Where sink bowls are exposed below countertop, finish sink exterior to match top.
4. Divide multiple compartment sinks with double-wall, 16-gauge stainless steel partitions rounded to 1/2-inch radius on top and having corners rounded the same as other corners in sinks. Provide multiple compartment sinks with continuous face at exposed front.
5. Provide back, bottom, and front of one continuous piece with no overlapping joints or open spaces between compartments.
6. Pitch bottom of each compartment, and crease to die-stamped recess to receive lever-type drain, without use of solder, rivets, or welding.
7. Finish front and exposed ends of sink countertop with 1-1/2-inch, 190-degree rolled edge.
8. Finish back and ends adjacent to walls or other fixtures with backsplash.
9. For sinks in worktops, construct as above but omit roll edges and backsplashes. Fabricate bowl to be flush with work surface.

E. Drains, Wastes and Faucets:

1. Provide 2-inch, heavy cast bronze body, with removable flat stainless steel strainer, twist handle waste outlet with support bracket and one-piece connected chrome-plated brass overflow.
2. Provide 3-1/2-inch crumb cup waste outlets in all die-drawn inset type sinks.
3. Faucets: As specified.

PART 3 - EXECUTION

3.01 INSTALLATION

A. Installation, General: Set countertops securely in place, level, and adjust to correct height.

1. Anchor countertops to supporting substrate where indicated and where required for sustained operation and use without shifting or dislocation.
2. Conceal anchorages where possible.
3. Adjust countertops and other work surfaces to level tolerance of 1/16-inch maximum offset, and maximum variation from level or indicated slope of 1/16-inch per ft.

B. Field Joints: Complete field-assembly joints (joints that cannot be completed in shop) by welding, bolting-and-gasketing, or similar methods as indicated.
1. Grind welds smooth and restore finish.
2. Set or trim gaskets flush, except for T-gaskets as indicated.

E. Knock outs: Provide hydraulic knock outs in countertops, where required, to run plumbing, lines to final connections.

F. Sealants and Gaskets: Install completely around each unit to make joints airtight, watertight, vermin-proof, and sanitary for cleaning purposes.
1. In general, make sealed joints not more than 1/8-inch wide, and stuff backer rod to shape sealant bead properly, at 1/4-inch depth.
2. Shape exposed surfaces of sealant slightly concave, with edges flush with faces of materials at joint.
3. At internal-corner joints, apply sealant or gaskets to form a sanitary cove, of not less than 3/8-inch radius.
4. Provide sealant-filled or sealant-gasketed joints up to 1/2-inch joint width and metal closure strips for wider joints with sealant application each side of strip.
5. Anchor gaskets mechanically or with adhesives to prevent displacement.
6. All countertops adjacent to wall shall be sealed to wall as specified.

H. Final Connections:
1. Final hook-ups are not part of the scope of work of the FSEC. All final hook-ups (plumbing, mechanical and electrical) shall be part of the General Contractor's area of responsibility. The General Contractor shall make allowances for elbows, traps, etc., and shall make final connections on the job, supply all necessary valves, traps, steam traps, faucets, starting switches for motors, etc., except where specifically noted otherwise in the written specifications.
2. The Contractor shall be responsible for all inter-connections between systems and the foodservice equipment.

I. Installers shall be responsible for verifying dimensions.

3.02 CLEANING

A. After completion of installation and other major work, remove protective coverings, if any, and clean countertops, internally and externally.
1. Restore exposed and semi-exposed finishes to remove abrasions and other damages; polish and buff exposed-metal surfaces and touch-up painted surfaces.
2. Replace work that cannot be successfully restored.

END OF SECTION

SECTION 12 36 19
BUTCHER BLOCK BENCH TOPS

PART 1 GENERAL

1.01 SUMMARY
- A. Section Includes
  - 1. Butcher Block Bench Tops
- B. Products Supplied But Not Installed Under This Section
- C. Products Installed But Not Supplied Under This Section
- D. Related Sections
- E. Allowances
- F. Unit Prices
- G. Measurement Procedures
- H. Payment Procedures
- I. Alternates

1.02 REFERENCES
- A. Architectural Woodwork Standards, Current Edition

1.03 DEFINITIONS

1.04 SYSTEM DESCRIPTIONS
- A. Design Requirements, Performance Requirements
  - 1. Performance shall comply with Premium grade requirements of Architectural Woodwork Standards, Current Edition,
    - a. Section 8 – Wall/Ceiling Surfacing and Partitions
    - b. Section 10 - Casework
    - c. Section 11 – Countertops

1.05 SUBMITTALS
- A. Product Data
  - 1. Submit manufacturer's wood countertop data sheets.
  - 2. Submit manufacturer's product data for adhesives and finishes that indicate VOC limits for each product.
- B. Shop Drawings
  - 1. Submit shop drawings in conformance with the requirements of the Architectural Woodwork Standards, Section 1 – Submittals.
  - 2. The first page of the shop drawing shall include a WI Certified Compliance Label.
  - 3. Submit shop drawings indicating materials and hardware, details for construction, dimensions, fastening and installation details. Shop drawings shall indicate grounds, backing, blocking, sleepers, countertop configurations, edge details, splash details, and configuration options.
- C. Samples
  - 1. Submit a minimum 12-inch x 12-inch sample of manufacturer's full range of wood samples
- D. Quality Assurance/Control Submittals
  - 1. Design Data, Test Reports, Certificates, Manufacturers' Instructions, Manufacturers' Field Reports, Qualification Statements

a. Provide AWI Certified Compliance Certificate certifying that materials, fabrication and installation will comply with the specified requirements.

E. Closeout Submittals
1. Provide AWI Certified Compliance Certificate for Installation.

1.06 QUALITY ASSURANCE
A. Qualifications
1. Woodwork manufacturer with no less than five years of production experience similar to a specific project, whose qualifications indicate the ability to comply with the requirements of this section.
2. A single manufacturer shall provide and install the work of described in this section.
3. Bidders will be Woodwork Association program participants.
B. Regulatory Requirements
1. Fire-Test-Response Characteristics
a. Wood countertops shall comply with the following surface-burning characteristics as determined by testing identical products per ASTM E-84 by UL or another testing and inspecting agency acceptable to authorities having jurisdiction:
1. Flame-Spread Index: 200 or less (Class C)
2. Smoke-Developed Index: 450 or less
C. Certifications
1. Work shall be in accordance with the Grade or Grades specified of the Architectural Woodwork Standards.

1.07 DELIVERY, STORAGE, AND HANDLING
A. Packing, Shipping, Handling, and Unloading
1. Comply with Woodwork Institute Architectural Woodwork Standards, Latest Edition, Section 2 – Care & Storage.
2. Deliver materials only when the project is ready for installation and the contractor has provided a clean storage area
B. Acceptance at Site
1. Delivery of millwork shall be made only when the area of operation is enclosed, all plaster and concrete work is dry and the area broom clean.

1.08 PROJECT CONDITIONS
A. Project Environmental Requirements
1. Maintain indoor temperature and humidity within the range recommended by the Architectural Woodwork Standards for the location of the project.

1.09 SEQUENCING
A. Coordinate fabrication, delivery, and installation with the contractor and other applicable trades.

1.10 SCHEDULING
1.11 WARRANTY
1.12 SYSTEM STARTUP
1.13 OWNER'S INSTRUCTIONS
1.14 COMMISSIONING

1.15 MAINTENANCE

PART 2 PRODUCTS

2.01 MANUFACTURERS
- A. Butcher Block Bench Tops
  1. John Boos, 3601 S. Banker St., Effingham, IL 62401 or Equal
  2. Michigan Maple Block Co., 1420 Stamdish Ave., P.O. Box 245, Petoskey, MI 49770
  3. Bally Block, Co., 30 S. Seventh Street, P.O. Box 188, Bally, PA 19503

2.02 EXISTING PRODUCTS

2.03 MATERIALS

2.04 MANUFACTURED UNITS

2.05 EQUIPMENT

2.06 COMPONENTS
- A. Lumber shall be in accordance with the Architectural Woodwork Standards Grade specified for the product being fabricated. Moisture content shall be 6% to 12% for boards up to 2-inches nominal thickness and shall not exceed 19% for thicker pieces.
- B. Core shall be solid butcher block meeting the requirements of Architectural Woodwork Standards.
- C. Adhesives used shall be Type II Water-Resistant

2.07 ACCESSORIES

2.08 MIXES

2.09 FABRICATION
- A. Configuration: Solid Butcher Block, AWS Figure 11-066
- B. Species: Northern Hard Rock Maple
- C. Lamination: Edge Grain
- D. Edge Type: Radius, ½" all edges
- E. Top Dimensions:
  1. Width: As detailed
  2. Length: As detailed
  3. Thickness: 2-1/4"
- F. Hardwood Screw Plugs
  1. Solid Wood Plugs
     a. Species: Hard Maple
     b. Size: 1/2-inch diameter
     c. Grain: Face

2.10 FINISHES
- A. Finish: Factory applied, non-toxic, food safe, clear satin finish

2.11 SOURCE QUALITY CONTROL

PART 3 EXECUTION

3.01 INSTALLERS

3.02 EXAMINATION
- A. Site Verification of Conditions
  1. Verify the adequacy and proper location of any required or support framing.

2. Verify that mechanical, electrical, plumbing, and other building components affecting work in this section are in place.

3.03 PREPARATION
3.04 ERECTION
3.05 INSTALLATION
A. Install all work in conformance with the Architectural Woodwork Standards, Latest Edition.
B. Installation shall conform to the AWS Grade of the items being installed
C. All work shall be secured in place, square, plumb, and level.
D. All work abutting other building components shall be properly scribed.
E. Mechanical fasteners used at exposed and semi-exposed surfaces, excluding installation attachment screws shall be countersunk and plugged.
F. Equipment cutouts shown on plans shall be cut by the countertop installer.

3.06 APPLICATION
3.07 CONSTRUCTION
3.08 REPAIR/RESTORATION
3.09 RE-INSTALLATION
3.10 FIELD QUALITY CONTROL
3.11 ADJUSTING
A. Before completion of the installation, the installer shall adjust all moving operating parts to function smoothly and correctly.
B. All nicks, chips, and scratches in the finish shall be filled and retouched. Damaged items that cannot be repaired shall be replaced.

3.12 CLEANING
A. Upon completion of installation, the installer shall clean all installed items of pencil and ink marks and broom clean the area of operation, depositing debris in containers provided.

3.13 DEMONSTRATION
3.14 PROTECTION
3.15 SCHEDULES

END OF SECTION

SECTION 131100 - SWIMMING POOL GENERAL REQUIREMENTS

PART 1 - GENERAL

1.1 WORK INCLUDED

A. The scope of the work included under this Section of the Specifications shall include swimming pool(s) as illustrated on the Drawings and specified herein. The General and Supplementary Conditions of the Specifications shall form a part and be included under this Section of the Specifications. The Swimming Pool Subcontractor shall provide all supervision, labor, material, equipment, machinery, plant and any and all other items necessary to complete the work. ALL OF THE WORK IN SECTIONS 131100 – 131108 IS TO BE THE RESPONSIBILITY OF ONE EXPERIENCED SWIMMING POOL SUBCONTRACTOR PRIMARILY ENGAGED IN THE CONSTRUCTION OF COMMERCIAL PUBLIC-USE SWIMMING POOLS. A SWIMMING POOL SUBCONTRACTOR SHALL BE CONSIDERED PRIMARILY ENGAGED AS REQUIRED HEREIN IF THE SUBCONTRACTOR DERIVED 50% OF ITS ANNUAL REVENUE FROM PUBLIC-USE SWIMMING POOL CONSTRUCTION FOR EACH OF THE LAST FIVE YEARS. THE SUBCONTRACTOR MUST HAVE ALSO, IN THE LAST FIVE YEARS CONSTRUCTED AT LEAST FIVE (5) COMMERCIALLY DESIGNED MUNICIPAL AND PUBLIC-USE SWIMMING POOLS, EACH OF WHICH SHALL HAVE INCORPORATED A MINIMUM SIZE OF 6,000 SQUARE FEET OF WATER SURFACE AREA WITH A CONCRETE AND CERAMIC TILE PERIMETER OVERFLOW GUTTER AND SELF-MODULATING BALANCE TANK. The Swimming Pool Subcontractor shall furnish and install the swimming pool structures, finishes, cantilever forming, swimming pool mechanical and electrical systems, and all accessories necessary for a complete, functional swimming pool system, as herein described. Work shall include start-up, instruction of Owner’s personnel, as-built drawings and warranties as required.

1.2 CODES, RULES, PERMITS, FEES

A. The swimming pools shall be constructed in strict accordance with the applicable provisions set forth by authorities having jurisdiction over swimming pool construction and operation in the State of California.

B. The Swimming Pool Subcontractor shall give all necessary notices, obtain all permits, and pay all government sales taxes, fees, and other costs in connection with their work; file all necessary plans, prepare all documents and obtain all necessary approvals of governmental departments having jurisdiction; obtain all required certificates of inspection for their work and deliver same to the Designated Representative before request for acceptance and final payment for the work.

C. The Swimming Pool Subcontractor shall include in the work any labor, materials, services, apparatus, or drawings in order to comply with all applicable laws, ordinances, rules and regulations, whether or not shown on Drawings and/or specified.

D. The Contractor shall submit all required documents and materials to all Governmental Departments having jurisdiction for any deferred approval items or substituted materials or products to obtain final approval to installation.

1.3 DESCRIPTION OF WORK

A. Furnish and perform supervision, coordination, all layout, formwork, excavation, hand trim, disposing off-site of all unused material or debris to complete the swimming pool excavation to the dimensions shown on the plans.

B. Furnish and install complete swimming pool structures, including reinforcing steel and cast-in-place or pneumatically placed concrete walls and floors.

C. Furnish and install swimming pool finishes, including ceramic tile and marble plaster or other waterproof finishes.

D. Furnish and install complete swimming pool mechanical system(s), including, but not limited to, circulation systems, filtration systems, pool water heating systems, water chemistry control systems, domestic water fill line systems, booster pump and special effects systems, and all pumps, piping, valves, and connections between system(s) and swimming pool(s).

E. Furnish and install complete swimming pool electrical system(s) from P.O.C. in Mechanical Room, including, but not limited to, underwater lighting systems, water level control systems, timing systems, scoreboards, special effects systems, control circuitry, motor starters, time clocks, bonding, and all conduits, conductors, contactors, and switches between the system(s) and swimming pool(s).

F. Furnish and install all swimming pool cantilever forming, deck equipment and required anchors and inserts for the specified equipment as required by code, shown on the Drawings and specified herein.

G. After the initial filling of the swimming pool system(s), should any repairs, continuing work, or other Subcontractor responsibility require drainage or partial drainage of the swimming pool systems, the Swimming Pool Subcontractor shall be responsible for any subsequent refilling and shall complete the project with the swimming pool system(s) full of water, water in chemical balance, complete in every way, and in full operation.

1.4 ASSIGNED RESPONSIBILITIES AND RELATED WORK

A. It is the intent of this section of the Specifications to clarify Work responsibilities of the trades directly and indirectly involved in construction of the pool systems. All labor, equipment, materials and supplies furnished by the Swimming Pool Subcontractor and other Subcontractors shall be as directed by the Owner through their Designated Representative.

B. THE SWIMMING POOL SUBCONTRACTOR SHALL NOT SUBCONTRACT ANY PORTION OF THE SWIMMING POOL CONSTRUCTION OR SWIMMING POOL EQUIPMENT INSTALLATION TO ANYONE OTHER THAN A SUBCONTRACTOR THAT SATISFIES THE REQUIREMENTS OF SECTION 131100.

C. References to “swimming pool systems” shall include the swimming pools, equipment, and accessories.

D. The Owner will provide one complete water filling of the swimming pool(s), but will not assume any responsibility for the swimming pool system(s) until they have been proved fully operational, complete in every way and accepted by the Designated Representative.

1.5 RESPONSIBILITIES OF THE CONTRACTOR

A. The Contractor shall grade the swimming pool site(s), establish benchmarks, cut and fill as necessary to provide as level an area as possible at swimming pool deck elevation before swimming pool layout.

B. The Contractor shall be responsible for horizontal dimensions and grade elevations accurately from established lines and benchmarks (as indicated on the Drawings) and be responsible for those grades.

C. The Contractor shall provide adequate temporary light, electric power, heat and ventilation per Federal and State OSHA requirements to construct the swimming pool system(s).

D. The Contractor shall not permit any heavy equipment activity over any area or within five (5) feet of any area under which swimming pool piping is buried. There shall be no exceptions to this requirement.

E. The Contractor shall keep the swimming pool excavation(s) and swimming pool structure(s) free of construction residue and waste materials of their workmen or Subcontractors, removing said material from the swimming pools as required.

F. The Contractor shall protect the swimming pool(s) from damage caused by their construction equipment and /or workmen and Subcontractors.

G. The Contractor shall provide a representative at time of swimming pool start-up to coordinate all trades related to swimming pool system(s).

1.6 RESPONSIBILITIES OF THE MECHANICAL SUBCONTRACTOR

A. The Mechanical Subcontractor shall be licensed in the State of California and provide written notifications to Swimming Pool Subcontractor and contractor when necessary to excavate and backfill within the swimming pool construction site.

B. The Mechanical Subcontractor shall not utilize any swimming pool piping trench for installation of any sanitary sewer, storm sewer, domestic water, hot water, chilled water or natural gas line.

C. The Mechanical Subcontractor shall furnish and install all sanitary sewer piping, including vent stacks (if necessary), for backwash pits, floor drains and floor sinks as required by code, shown on Drawings, and herein specified.

D. The Mechanical Subcontractor shall furnish and install all storm sewer piping and site drainage systems as required by code, shown on the Drawings, and herein specified.

E. The Mechanical Subcontractor shall provide a minimum 75 psi water supply for swimming pool construction work within fifty (50) feet of the swimming pool construction site(s).

F. The Mechanical Subcontractor shall furnish and install reduced pressure backflow protected domestic water lines to P.O.C. within swimming pool Mechanical Room as required by code, shown on the Drawings, and herein specified.

G. The Mechanical Subcontractor shall furnish and install natural gas piping, pressure regulation and valving to P.O.C. within swimming pool Mechanical Room as required by code, shown on the drawings, and herein specified.

H. The Mechanical Subcontractor shall furnish and install all ductwork, louvers, and all HVAC equipment within swimming pool Mechanical Room as required by code, shown on the Drawings, and herein specified.

I. The Mechanical Subcontractor shall provide a representative at time of swimming pool start-up to coordinate work related to swimming pool system(s).

1.7 RESPONSIBILITIES OF THE ELECTRICAL SUBCONTRACTOR

A. The Electrical Subcontractor shall be licensed in the State of California and shall furnish and install electrical service to swimming pool Mechanical Room sized to accommodate all necessary swimming pool equipment as shown on the Drawings and herein specified.

B. The Electrical Subcontractor shall furnish any temporary power needed by the Swimming Pool Subcontractor within fifty (50) feet of the swimming pool construction site(s).

C. The Electrical Subcontractor shall furnish and install all conduits, conductors, starters/disconnects, panels, circuits, switches and equipment as required for lighting, ventilation and HVAC equipment within swimming pool Mechanical Room as required by code, shown on the Drawings, and herein specified.

D. The Electrical Subcontractor shall furnish and install all conduits, conductors, panels, circuits, switches and equipment for area lighting as required by code, shown on the Drawings, and herein specified.

E. All equipment, material and installation shall be as required under Division 16 of the Specifications and shall conform to CEC Article 680 (latest revision), State and Local Codes, and as may be required by all authorities having jurisdiction over swimming pool construction within the State of California.

F. The Electrical Subcontractor shall provide a representative at time of swimming pool start-up to coordinate work related to swimming pool system(s).

1.8 INTENT

A. It is the intention of these specifications and Drawings to call for finished work, tested and ready for operation. Wherever the work “provide” is used, it shall mean “furnish and install complete and ready for use.”

B. Minor details not usually shown or specified, but necessary for proper installation and operation, shall be included in the work, the same as if herein specified or shown.

1.9 SCHEDULE OF VALUES

A. Provide a Schedule of Values for all work specified in each of the technical specifications listed in the table below, regardless of whether the work is performed by the swimming pool contractor or others. Values listed shall be fully burdened, with contractor general conditions, overhead, profit and bonds included. Payments for swimming pool work completed shall not be approved until Schedule of Values has been submitted to and approved by Architect.

SWIMMING POOL SCHEDULE OF VALUES			
No.	Section #	Description	Value
1.	131101	Swimming Pool Excavation	
2.	131102	Swimming Pool Concrete	
3.	131103	Swimming Pool Shotcrete	
4.	131104	Swimming Pool Ceramic Tile	
5.	131105	Swimming Pool Plaster	
6.	131106	Swimming Pool Equipment	
7.	131107	Swimming Pool Mechanical	
8.	131108	Swimming Pool Electrical	
Total			

1.10 SUBMITTAL PROCEDURES

A. General: Electronic copies of CAD Drawings of the Contract Drawings will not be provided by Architect for Subcontractor's use in preparing submittals.

B. Coordination: Coordinate preparation and processing submittals with performance construction activities.
   1. Coordinate each submittal with fabrication, purchasing, testing, delivery, other submittals, and related activities that require sequential activity. Coordinate transmittal of different types of submittals for related parts of the Work so processing will not be delayed because of need to review submittals concurrently for coordination.
      a. Architect reserves the right to withhold action on a submittal requiring coordination with other submittals until related submittals are received.

C. Submittals Schedule: Comply with requirements in Division 1 Section "Construction Progress Documentation" for list of submittals and time requirements for schedules performance of related construction activities.

D. Processing Time: Allow enough time for submittal review, including time for re-submittals as follows. Time for review shall commence on Architect's receipt of submittal.
   1. Initial Review: Allow fifteen (15) days for initial review of each submittal. Allow additional time if processing must be delayed to permit coordination with subsequent submittals. Architect will advise Contract when a submittal being processed must be delayed for coordination.
   2. Concurrent Review: Where concurrent review of submittals by Architect's consultants, Owner, or other parties is required, allow twenty-one (21) days for initial review of each submittal.
   3. Direct Transmittal to Consultant: Where the Contract Documents indicate that submittals may be transmitted directly to Architect's consultants, provide duplicate copy of transmittal to Architect. Submittal will be returned to Architect before being returned to Subcontractor.
   4. If intermediate submittal is necessary, process it in same manner as initial submittal.
   5. Allow fifteen (15) days for processing each submittal.

6. No extension of the Contract Time will be authorized because of failure to transmit submittals enough in advance of the Work to permit processing.

E. Identification: Place a title block on each submittal for identification.
   1. Indicate name of firm or entity that prepared each submittal on title block.
   2. Provide a space on title block to record Subcontractor's review and approval markings and action take by Architect.
   3. Include the following information on title block for processing and recording action taken: (See Attached Sample)
      a. Project name.
      b. Date.
      c. Name and address of Subcontractor.
      d. Name of Subcontractor.
      e. Name of Supplier.
      f. Name of Manufacturer.
      g. Unique identifier, including revision number.
      h. Number and title of appropriate Specification Section.
      i. Drawing number and detail references, as appropriate.
      j. Other necessary identification.

SUBMITTAL FOR:	SUBMITTAL TO:	SUBCONTRACTOR:

Item Number: _____
Section Number: _____
Section Description: _____
Subcontractor: _____
Supplier: _____
Manufacturer: _____
Product Code: _____
Quantity: _____

Subcontractor Certification:

It is hereby certified that the equipment or material designated in this submittal is proposed to be incorporated in the above-named project and is in compliance with the contract drawings and / or specifications and is submitted for approval.

Certified by: _____

Date: _____

Job Superintendent: _____

Revisions: _____

Contractor's Submittal Stamp:

Architect's Review Stamp and Comments

F. Deviations: Highlight, encircle, or otherwise identify deviations from the Contract documents on submittal.

G. On all catalogue or cut sheets identify which model or type is being submitted.

H. Transmittal: Package each submittal individually and appropriately for transmittal and handling. Product data and shop drawings shall be packaged within a three ring binder and colored samples shall be packaged on a heavy cardboard. Transmit each submittal using a transmittal form.

1. On an attached separate sheet, prepared on Subcontractor's letterhead, record relevant information, request for data, revisions other than those requested by Architect on previous submittals and deviations from requirements of the Contract documents, including minor variations and limitations. Include the same label information as the related submittal.
2. Include Subcontractor's certification stating that information submitted complies with requires of the Contract Documents.
3. Transmittal Form: Provide locations on form for the following information:
    a. Project name.
    b. Date.
    c. Destination (To:).
    d. Source (From:).
    e. Names of Subcontractor, manufacturer, and supplier.
    f. Category and type of submittal.
    g. Submittal purpose and description.
    h. Remarks.

I. Distribution: Furnish copies of final submittals to manufacturers, Subcontractors, suppliers, fabricators, installers, authorities having jurisdiction and others as necessary for performance of construction activities. Show distribution on transmittal forms.

J. Use for Construction: Use only final submittals with mark indicating action taken by Architect in connection with construction.

1.11 SUBSTITUTIONS

A. To obtain approval to use unspecified products, bidders shall submit requests for substitution at least ten (10) days prior to bid date. Requests shall only be considered if they clearly describe the product for which approval is asked, including all data necessary to demonstrate acceptability. All unspecified products and equipment will be considered on an “or equal” basis at the discretion of the Designated Representative. Requests for substitution received after the specified deadline will not be considered. Where a conflict exists between the requirements of the General Conditions / Special Conditions / Division 1 concerning substitutions and the requirements of this Article, this Article (Section 131100, Article 1.10) shall govern.

B. Where the Swimming Pool Subcontractor proposes to use an item of equipment other than that specified or detailed on the Drawings which requires any redesign of the structure, partitions, foundations, piping, wiring, or any other part of the architectural, mechanical, or electrical layout, all such redesign and all new drawings (stamped by California Licensed Engineer) and detailing required shall be prepared by the Swimming Pool Subcontractor, at their own expense, submitted for review and approval by the Designated Representative prior to bid.

C. Where such approved deviation requires a different quantity and arrangement of piping, supports and anchors, wiring, conduit, and equipment from that specified or indicated on the Drawings, the Swimming Pool Subcontractor shall furnish and install any such piping, structural supports, controllers, motors, starters, electrical wiring and conduit, and any other additional equipment required by the system, at no additional cost to the Owner.

1.12 SURVEYS AND MEASUREMENTS

A. The Swimming Pool Subcontractor shall base all measurements, both horizontal and vertical, from benchmarks established by the Contractor. All work shall agree with these established lines and levels. The mechanical Drawings do not give exact details as to elevations of piping, exact locations, etc. and do not show all offsets, control lines, pilot lines and other installation details. Verify all measurements at site and check the correctness of same as related to the work.

1.13 DRAWINGS

A. Drawings are diagrammatic and indicate the general arrangement of the systems and work included in the Subcontractor. Drawings are not to be scaled. The architectural drawings and details shall be examined for exact dimensions. Where they are not definitely shown, this information shall be obtained from the Designated Representative.

1.14 SWIMMING POOL SUBCONTRACTOR

A. The swimming pool construction work as herein described and specified in Division 13 of the Project Manual shall be the complete responsibility of a qualified and specifically licensed (C-53 license classification within the State of California) Swimming Pool Subcontractor with extensive experience in commercial public use swimming pool installations.

B. The Contractor shall require the Swimming Pool Subcontractor to furnish to the Contractor performance and payment bonds in the amount of 100% of the Swimming Pool Subcontractor's bid written by a surety Company properly registered in the State of California and listed by the U.S. Treasury. The expense of the bond(s) is to be borne by the Subcontractor. The Contractor shall clearly specify the amount and requirements of the bond(s) in the Contractor's written or published request for subbids. The Contractor's written or published request for subbids shall also specify that the bond(s) expense is to be borne by the Subcontractor.

C. Subcontractor certifies that it meets the qualifications and experience requirements established in Swimming Pool General Requirements, Section 131100, as follows:
   1. Subcontractor has derived 50% of its annual revenue from public-use swimming pool construction for each of the last five (5) years.
   2. Subcontractor has, in the last five (5) years, constructed at least five (5) commercially designed municipal and public-use swimming pools, each of which have incorporated a minimum size of 6,000 square feet of water surface area with a concrete and ceramic tile perimeter overflow gutter and self-modulating balance tank.
   3. The following list of projects meet the requirements of section (b) above and the contact as reference by the Contractor, the Awarding Authority of their agent or designee.

a. Owner: _____
Scope of Project: _____
Contact Person: _____
Phone Number: _____
Architect for Project: _____

b. Owner: _____
Scope of Project: _____
Contact Person: _____
Phone Number: _____
Architect for Project: _____

c. Owner: _____
Scope of Project: _____
Contact Person: _____
Phone Number: _____
Architect for Project: _____

d. Owner: _____
Scope of Project: _____
Contact Person: _____
Phone Number: _____
Architect for Project: _____

e. Owner: _____
Scope of Project: _____
Contact Person: _____
Phone Number: _____
Architect for Project: _____

D. Swimming Pool Deck Subcontractor other than the swimming pool Subcontractor certifies that it meets the qualifications and experience requirements established in Swimming Pool General Requirements, Section 131100, as follows:

1. Subcontract has, in the last five (5) years, constructed at least five (5) commercially designed cantilevered pool decks over perimeter gutters, each of which have incorporated a minimum size of 6,000 square feet of water surface area of the swimming pool.
2. The following list of projects meet the requirements of section (b) above and the contact as reference by the Contractor, the Awarding Authority of their agent or designee.

SWIMMING POOL DECK SUBCONTRACTOR

a. Owner: _____
Scope of Project: _____
Contact Person: _____
Phone Number: _____
Architect for Project: _____

b. Owner: _____

Scope of Project: _____
Contact Person: _____
Phone Number: _____
Architect for Project: _____

c. Owner: _____
Scope of Project: _____
Contact Person: _____
Phone Number: _____
Architect for Project: _____

d. Owner: _____
Scope of Project: _____
Contact Person: _____
Phone Number: _____
Architect for Project: _____

e. Owner: _____
Scope of Project: _____
Contact Person: _____
Phone Number: _____
Architect for Project: _____

1.15 OPERATING INSTRUCTIONS

A. The Swimming Pool Subcontractor shall determine from actual samples of pool water supplied by the Owner, the proper water management program necessary for maximum operating efficiency and comfort. The Swimming Pool Subcontractor shall provide the services of experienced personnel familiar with this type of pool system operation, in conformance with Section 131105 of the Specifications.

1.16 MAINTENANCE MANUALS

A. The Swimming Pool Subcontractor shall provide six (6) bound sets for delivery to the Designated Representative of instructions for operating and maintaining all systems and equipment included in this Contract. Manufacturer's advertising literature or catalog pictures will not be acceptable for operating and maintenance instructions.

B. Bound in ring binders shall be all parts lists, periodic maintenance instructions and troubleshooting guidelines for all pool equipment, including but not limited to filters, pumps, controllers, water chemistry control equipment, etc.

1.17 SECURE FROM THE OWNER

A. A complete Owner-furnished filling of the swimming pools.

B. The Owner's assistance, as specified herein, from the time of start-up until final written acceptance of the swimming pool system(s).

C. Chemicals as required for swimming pool operation after Swimming Pool Subcontractor completes initial water chemistry balance and water treatment during the maintenance period described in Section 131105 of the Specifications.

1.18 WARRANTY

A. The Swimming Pool Subcontractor shall warrant all swimming pool structures, finishes and systems against defects in material and workmanship for a period of one year after the date of acceptance by the Owner. Any repair or replacement required due to defective material or workmanship will be promptly corrected by the Swimming Pool Subcontractor.

PART 2 - PRODUCTS

Not Used

PART 3 - EXECUTION

Not Used

END OF SECTION 131100

SECTION 131101 - SWIMMING POOL EXCAVATION

PART 1 GENERAL

1.1 DESCRIPTION

A. Finish and fine grading to bring the surface of the ground to the required grades and elevations as indicated on the Drawings.

B. Subgrade improvements and placing of compacted fills.

C. Excavation and backfill for all swimming pool, surge chamber and structural requirements, including footings, foundations, slabs and walls.

1.2 QUALITY ASSURANCE

A. Requirements of Regulatory Agencies: Conform with requirements of the General Conditions, and more specifically the following:
   1. Comply with California Building Code, latest edition.
   2. Comply with applicable construction safety orders, latest edition, Federal and State OSHA.
   3. Comply with applicable trench safety provisions, latest edition, Federal and State OSHA.

B. Qualifications of Workers:
   1. The entity performing the work of this Section shall have been successfully engaged in the respective trade for at least five (5) years immediately prior to commencement of the Work.
   2. For actual construction operations, use only trained and experienced workers with a minimum of three (3) years experience with the materials and methods specified.
   3. Provide at least one person who shall be present at all times during execution of the work of this Section, with a minimum of five (5) years experience with the type of materials being installed, the referenced standards, and who shall direct all Work performed under this Section.

C. Project/Site Conditions:
   1. Be familiar with site and subsurface conditions.
   2. Excavation is unclassified and includes excavation to sub-grade elevations indicated or necessary, regardless of character of materials and obstructions encountered.
   3. Provisions for mitigation of wet soils due to seepage or rain shall be made during excavation and throughout construction. If wet soils are encountered within the swimming pool excavations, de-watering shall be provided and the Geotechnical Engineer shall make recommendations for moist soil mitigation.
   4. Where slope instability is encountered, all excavations within those areas shall be 1.5:1 or flatter. Forming of vertical walls may be necessary, and all soil conditions shall be field verified by the Geotechnical Engineer.
   5. Contractor shall review the Geotechnical Investigation Report as furnished by the Owner to determine the suitability of the soils.

D. Adverse Weather Conditions:
   1. During the periods when site soil moisture content is substantially in excess of moisture content required for optimum compaction, do not perform fill compaction.

2. When unfavorable weather conditions necessitate interrupting filling and grading operations, prepare areas by compaction of surface and grading to avoid collection of water. Provide adequate temporary drainage to prevent erosion.

1.3 SUBMITTALS AND SUBSTITUTIONS

A. Provide submittals in conformance with requirements of Section 013300.

B. Required submittals include:
1. Offsite fill material, if applicable.

C. Submit proof of qualifications as specified in Article 1.2.B of this Section.

1.4 EXCAVATING & TRENCHING, GENERAL REQUIREMENTS

A. Refer to Section 015000, Temporary Facilities and Controls.

B. All trenches, holes, etc. are to be completely protected using solid barricades, steel plates, and plywood both during construction and during off hours, including night time.

C. Flashing warning light barricades are required on sidewalks, roads, and any other critical areas that require night time protection.

D. Roads, paths and sidewalks shall not be blocked at any time or in any way. Trenching across roads, paths or sidewalks involves special instructions and review of the construction procedure by the Owner at least three (3) days prior to the Work actually being started.

E. Construction equipment, including all trucks, cars, etc. shall not be parked or driven on roads, paths or sidewalks. Items not allowed on roads, paths or sidewalks include hoses, power cords, ropes, construction materials, dirt and debris, etc.

F. All roads, paths and sidewalks must remain clear and the Contractor shall maintain temporary safe and effective pedestrian access at all times.

G. Drawings show existing major underground utilities using the best information available. The Contractor shall also fully check public works reference drawings prior to excavation. Call local Dig Alert to locate utilities to ensure safety.

PART 2 PRODUCTS

2.1 MATERIALS

A. Earth materials obtained on site are acceptable for use as engineered fill provided that all grasses, weeds, cobbles less than 2 inches and other deleterious debris are first removed. On-site, non-expansive soils with expansion index of less than 20 may be used.

B. Engineered fill materials shall be placed in thin layers (less than ten inches uncompacted thickness), brought to near the optimum moisture content or to a moisture content commensurate with effective compaction and soil stability, and compacted to a minimum of 90 percent of the maximum density obtainable by ASTM Test Method D1557.

C. Imported Fill: The table shown below provides general guidelines for acceptance of import engineered fill. Materials of equal or better quality than on-site material could

be reviewed by the Geotechnical Engineer on a case-by-case basis. No soil materials shall be imported onto the project site without prior approval by the Geotechnical Engineer. Any deviation from the specifications given below shall be approved by the Geotechnical Engineer prior to import operations.

Maximum Percent Passing #200 Sieve	40
Maximum Percent Retained 3" Sieve	0
Maximum Percent Retained 1½" Sieve for Building Areas	15
Maximum Percent Retained ¾" Sieve for Landscape Areas	5
Maximum Liquid Limit	40
Maximum Plasticity Index	14
Minimum R-Value for Pavement Areas	50
Maximum Expansion Index	20

Furthermore, the soils proposed for import shall be generally homogenous and shall not contain cemented or clayey and/or silty lumps larger than one inch. When such lumps are present, they shall not represent more than ten percent (10%) of the material by dry weight.

PART 3 EXECUTION

3.1 INSPECTION

A. Verify drawing dimensions and elevations with actual field conditions. Inspect related Work and adjacent surfaces and report discrepancies and conditions which prevent proper execution of the Work to the Owner's Representative.

3.2 SUBGRADE IMPROVEMENTS

A. Prior to soil compaction, existing ground surface shall be stripped of surface vegetation. A stripping depth of one inch shall be adequate. In no instance shall stripped materials be used in engineered fill or blended with and compacted in original ground.

B. Prior to placement of backfill, excavation bottoms shall be reviewed for indications of loose-fill, discoloration, or loose, compressible, native materials. Where these are encountered, they shall be excavated and removed, or excavated and compacted as directed by Geotechnical Engineer. Excavation of native soils shall continue in vertical increments of one foot until relative compaction tests taken at the bottom of the working surface (excavation bottom) equal or exceed 80 percent relative compaction. Fill placement in excavations shall not proceed until the geotechnical engineer or his representative on the site has reviewed, tested as described above and accepted materials exposed at the bottom of the excavation.

C. Ground surfaces in the proposed pool deck and pool bottom areas shall be compacted in accordance with the following procedures:
   1. Excavate earth material in the proposed pool deck area to a minimum depth of two (2) feet below existing grade or one (1) foot below bottom of the concrete pool deck, whichever is deeper.
   2. Excavate earth material in the proposed pool bottom area to a minimum depth of

two (2) feet below.

3. The bottom of the excavation shall be reviewed by the Geotechnical Engineer or his representative prior to any backfill operations.
4. Moisten soils to near the optimum moisture or to a moisture consistent with effective compaction and soil suitability. Compact moistened soils to a minimum of 90 percent of the maximum density obtained by ASTM Test Method D1557.
5. Over-excavation laterally shall be performed at least two (2) feet beyond pool deck and pool bottom edges.

3.3 EXCAVATION

A. Checking Layout: Contractor shall, before commencing the excavation work, check all lines, stakes and levels for dimensions, angles, elevations and grades with the survey.

B. Dimensions: Excavate to proper dimensions as shown, cut square and smooth with firm level bottoms. Prepared excavations shall be approved by Geotechnical Engineer. Excavations shall be free of loose or disturbed materials.

C. Excess Water Control: Keep all excavations free from standing water by pumping, draining or providing proper protection against water intrusion. If soil becomes soft, soggy or saturated, perform additional excavation to firm soil not affected by water.

D. Form Removal: Make all excavations of sufficient size to permit installation and removal of forms and all other required work.

E. Alternate Forming: Sides of structures may be formed by neat excavations where banks will stand without caving. If banks cave, provide forming as required and widen excavation to permit forming, bracing and inspection. Provide forming in conformance with Section 131102 and all recognized safety standards. Form all grade beams.

3.4 BACKFILLING

A. Method: After concrete has been placed, forms removed and concrete work approved, backfill the excavations with earth to indicated or required grades. Carry on backfilling simultaneously on each side of walls or grade beams. Remove all rubbish and wood from the excavations before placing backfill.

B. Concrete Protection: Prior to placing any backfill, adequately cure all concrete and provide any bracing required to ensure the stability of the structure. Protect waterproofing and dampproofing against damage in a manner acceptable to the Owner's Representative. Remove bracing as backfill operations progress.

C. Backfill of all trenches should be placed in thin lifts and mechanically compacted to achieve a relative compaction of not less than 95 percent in paved areas and 90 percent in other areas per ASTM 1557. Care should be taken not to damage utility lines.

D. Moisture: Rigidly control the amount of water used to insure optimum moisture conditions for the type of fill material used. Excessive amounts of water causing saturation of earth will not be permitted. Compaction by flooding or jetting is prohibited.

3.5 GRADING

A. Slopes: Grade to finish grades indicated on Drawings, with uniform slopes between all points.

B. Subgrades: Blade to required grade and roll or tamp subgrades for exterior slabs, decks and paving.

3.6 CLEAN-UP

A. Disposal: Haul away rubbish, debris, and rocks from site promptly and dispose of legally. Burning rubbish on site is prohibited.

B. Dust and Noise Abatement: During entire period of construction keep area and material being loaded sprinkled to reduce dust in air and annoyance to premises and surrounding property.

END OF SECTION 131101

SECTION 131102 - SWIMMING POOL CONCRETE

PART 1 - GENERAL

1.1 WORK INCLUDED

A. Forming for cast-in-place concrete and shotcrete associated with swimming pools and pool decks.

B. Reinforcement for cast-in-place concrete and shotcrete associated with swimming pools and pool decks.

C. Cast-in-place concrete for swimming pool structures. Do not use waterproofing admixture of any kind.

D. Cast-in-place concrete for swimming pool decks with Xypex C-500 crystalline waterproofing admixture. Waterproofing admixture for swimming pool decks only.

E. Provide labor, materials and equipment as required to install sealant for all pool deck expansion joints, or any other caulking, as indicated on the aquatic Drawings and herein specified.

1.2 QUALITY ASSURANCE

A. Qualifications of Workers:
   1. The entity performing the work of this Section shall have been successfully engaged in the respective trade for at least five (5) years immediately prior to commencement of the Work.
   2. For actual construction operations, use only trained and experienced workers with a minimum of three (3) years experience with the materials and methods specified.
   3. Provide at least one person who shall be present at all times during execution of the work of this Section, with a minimum of five (5) years experience with the type of materials being installed, the referenced standards, and who shall direct all Work performed under this Section.

B. Standards:
   1. In addition to complying with the California Building Code (latest edition), comply with all pertinent recommendations contained in "Guide to Formwork," Publication ACI 347R-14 of the American Concrete Institute.
   2. In addition to complying with California Building Code (latest edition), comply with all pertinent recommendations contained in “Guide to presenting Reinforcing Steel Design Details,” Publication ACI 315R-18 of the American Concrete Institute.
   3. In addition to complying with all local codes and regulations, comply with all pertinent recommendations contained in American Society for Testing and materials (ASTM); ASTM C 920 “Standard Specification for Elastometric Joint Sealants.”

C. Tolerances: Construct all swimming pool concrete straight, true, plumb and square within a tolerance horizontally of one in 200 and vertically of one in 2000.

1.3 SUBMITTAL AND SUBSTITUTIONS

A. Provide submittals in conformance with the requirements of Section 013300.

B. Samples and Certificates, Concrete Reinforcement:
   1. Provide all data and access required for testing as described in Section 014500 of the Specifications.
   2. All material shall bear mill tags with heat number identification. Mill analysis and report shall be made available upon request.
   3. Material not so labeled and identifiable may be required by the Owner to be tested by the testing laboratory selected by the Owner and at no additional cost to the Owner, in which case random samples will be taken for one series of tests from each 2-1/2 tons or fraction thereof of each size and kind of reinforcing steel.
   4. Design mix from batch plant demonstrating previous use history and associated strengths at 28 days.
   5. The Contractor shall submit a mix design stamped and signed by a licensed engineer for approval by the Owner's Representative prior to any placement of concrete.
   6. The Contractor shall submit a separate mix design stamped and signed by a licensed engineer for the swimming pool decks which contains the specified Xypex C-500 crystalline waterproofing admixture for approval by the Owner's Representative prior to any placement of concrete.

C. Submit proof of qualifications as specified in Article 1.2.A of this Section.

D. Submit reinforcing shop drawings for pool walls, gutters, floors, dike walls and balance tank, etc. as shown on the construction drawing.

1.4 PRODUCT HANDLING

A. Delivery: Deliver materials to the Project Site in the manufacturer's original unopened containers with all labels intact and legible.

B. Storage: Store materials under cover in a manner to prevent damage and contamination, and store only the specified materials at the Project Site.

C. Protection: Use all means necessary to protect the swimming pool concrete before, during, and after installation and to protect the installed Work specified in other Sections.

D. Replacements: In the event of damage, immediately make all repairs and replacements necessary to the approval of the Owner.

PART 2 - PRODUCTS

2.1 CONCRETE FORMWORK

A. Form Materials:
   1. Form Lumber: All form lumber in contact with exposed concrete shall be new except as allowed for reuse of forms in Part 3 of this Section, and all form lumber shall be one of the following, a combination thereof, or an equal approved in advance by the Owner's Representative.

a. “Plyform," Class I or II, bearing the label of the Douglas Fir Plywood Association; "Inner-Seal" Form as manufactured by Louisiana-Pacific, or approved equal.
b. Douglas Fir-Larch, number two grade, seasoned, surfaced four sides.

2. Form Release Agent: Colorless, non-staining, free from oils; chemically reactive agent that shall not impair bonding of paint or other coatings intended for use.

B. Ties and Spreaders:
1. Type: All form ties shall be a type which do not leave an open hole through the concrete and which permits neat and solid patching at every hole.
2. Design: When forms are removed, all metal reinforcement shall be not less than two (2) inches from the finished concrete surface.
3. Wire Ties and Wood Spreaders: Do not use wire ties or wood spreaders.

C. Alternate Forming Systems: Alternate forming systems may be used subject to the advance approval of the Owner’s Representative.

2.2 CONCRETE REINFORCEMENT

A. Bars: Bars for reinforcement shall conform to “Specifications for Deformed Carbon-Steel Bars for Concrete Reinforcement,” ASTM A-615, Grade 60.

B. Wire Fabric: Wire fabric shall conform to “Specifications for Carbon Steel Wire and Welded Wire Reinforcement, Plain and Deformed, for Concrete,” ASTM A1064.

C. Tie Wire: Tie wire for reinforcement shall conform to “Specifications for Carbon Steel Wire and Welded Wire Reinforcement, Plain and Deformed, for Concrete,” ASTM A1064 black annealed 16-gauge tie wire.

2.3 CAST-IN-PLACE CONCRETE

A. Concrete:
1. All concrete, unless otherwise specifically permitted by the Owner’s Representative, shall be transit-mixed in accordance with ASTM C94. Concrete for water retaining structures that do not receive a waterproofing finish such as ceramic tile or swimming pool plaster shall receive a topical waterproofing finish.
2. The control of concrete production shall be under the supervision of a recognized testing agency, selected by the Owner in accordance with Section 01 25 00 of the Specifications.
3. Quality: All concrete shall have the following minimum compressive strengths at twenty-eight (28) days and shall be proportioned within the following limits:
a. 4,000 psi minimum compressive strength for cast-in-place concrete swimming pool structures.
b. 4,000 psi minimum compressive strength for cast-in-place swimming pool decks with Xypex C-500 waterproofing admixture.
c. 1” maximum size aggregate.
d. 6.0 minimum sacks of cement per cubic yard.*
e. Maximum water to cement ratio of 0.40-0.45 maximum
f. 4” maximum slump.
g. Xypex Admix C-500 2% - 2.5% by weight of cement content. Contact Xypex Technical Services to confirm dosage. (To be used for swimming pool decks only.)

* For estimate only: to be determined by mix design.

4. Cement: All cement shall be Portland Cement conforming to ASTM C-150, Type II or V and shall be the product of one manufacturer.
5. Aggregates:
   a. Shall conform to "Standard Specifications for Concrete Aggregates," ASTM C33, except as modified herein.
   b. Coarse Aggregate: Clean sound washed gravel or crushed rock. Crushing may constitute not more than 30% of the total coarse aggregate volume. Not more than 5% flat, thin, elongated or laminated material nor more than 1% deleterious material shall be present. 1" aggregate graded from 1/4" to 1", fineness modulus 6.90 to 7.40. 1-1/2" graded from ½" to 1-1/2", fineness modulus 7.80 to 8.20.
   c. Fine Aggregate: Washed natural sand of hard, strong particles and shall contain not more than 1% of deleterious material, fineness modulus 2.65 to 3.05.
   d. Aggregate must be certified, non-expansive from a "known" good source.
6. Water: ASTM C1602, Clean, fresh, free from acid, alkali, organic matter or other impurities liable to be detrimental to the concrete (potable).
7. Admixtures: Admixtures shall be used upon approval of the Owner's Representative.
   a. Air-entraining admixture: Conform to ASTM C260.
   b. Water-reducing admixture: Conform to ASTM C494.
   c. Waterproofing admixture for swimming pool decks only: Xypex Admix C-500, No substitutions permitted. Conform to ASTM C494.
8. Xypex Admix C-500 Dosage: To be used for swimming pool decks only.
   a. General: Xypex Admix must be added to concrete mix at time of batching. It is important to obtain a homogeneous mixture of Xypex Admix with the concrete. Do not add dry Admix powder directly to wet mixed concrete as this could cause clumping and thorough dispersion may not occur.
   b. Dosage Rate: Under normal conditions, the crystalline waterproofing powder shall be added to the concrete mix at the following rates:
      1) Xypex Admix C-500 2% – 2.5% by weight of cement content
   c. Weather Conditions: For mixing, transporting and placing concrete under conditions of high temperature or low temperature, follow concrete practices such as those referred to in ACI 305R (Hot Weather Concreting) and ACI 306R (Cold Weather Concreting) or other applicable standards.
   d. Concrete Batching & Mixing Procedures: Procedures for the addition of Xypex admixture will vary according to type of batch plant operation and equipment. Prior to the placement of any concrete, the concrete batch plant and the contractor shall be responsible to consult with the local Xypex representative concerning additional procedures for the addition, mixing and to confirm dosage.

   Note: For enhanced chemical protection or for meeting specific project requirements or where the concrete mix design contains higher than 25% type F fly ash content or includes a Portland cement/slag cement/type C fly ash blend, consult with manufacturer or its authorized representative to determine appropriate dosage rates.

B. Construction Joints: Use keyform for slab pour joints. Either preformed galvanized or PVC construction joint forms of a standard manufacturer may be used. Install per manufacturer's recommendations and tool edges of slabs.

C. Waterstops: PVC bulb-type for use between concrete pours / lifts, conforming with ASTM D 570, D 624, and D 638. Provide in configuration(s) as recommended by manufacturer for specific application. Greenstreak, W.R. Meadows, or approved equal.

D. Curing Materials:
   1. Liquid Membrane (covered slab): Chlorinated rubber membrane forming, curing-sealing compound conforming to ASTM C309.
   2. Liquid Membrane (exposed slab): Clear methyl and butyl methacrylate non-staining, membrane forming, curing-sealing compound conforming to ASTM C309.

E. Cement Grout and Drypack:
   1. Cement Grout: Mix 1 part by volume of Portland Cement, 1/2 part by volume of water and fine aggregate enough to make mixture flow under its' own weight.
   2. Drypack: Mix 1 part by volume of Portland Cement, 1/2 part by volume of water and fine aggregate enough to make a stiff mix that will mold into a ball. Mix no more than can be used in 30 minutes.

2.4 JOINT SEALANT MATERIALS

A. Caulking: Multipart, non-sag gun grade polyurethane-based sealant meeting the requirements of ASTM C920-02, Type S or M, Mamemco International, Pecora, Sika Corp., Sonneborn Building Products, Tremco or approved equal. Self leveling caulking materials are not allowed.

B. Primer: Non-staining type, recommended by sealant manufacturer to suit application.

C. Joint Cleaner: Non-corrosive and non-staining type, recommended by sealant manufacturer; compatible with joint forming materials.

D. Sealant Backer Rod: Provide compressible polyethylene or polyurethane backer rod as recommended by the sealant manufacturer.

E. Bond Breaker Tape: Provide polyethylene tape or other plastic tape as recommended by sealant manufacturer, to be applied to sealant-contact surfaces where bond to substrate or joint filler must be avoided for proper performance of sealant.

F. Sand: Cover the surface of the caulking with #30 silica sand.

2.5 OTHER MATERIALS

A. All other materials, not specifically described but required for proper completion of the work of this Section, shall be as selected by the Contractor subject to the advance review by the Owner’s Representative.

PART 3 - EXECUTION

3.1 SURFACE CONDITIONS

A. Inspection:

1. Prior to all Work of this Section, carefully inspect the installed Work of other trades and verify that all such Work is complete to the point where this installation may properly commence.
2. Verify that all Work may be constructed in accordance with all applicable codes and regulations, the referenced standards, the original design, and in accordance with site specific Geotechnical Report.

B. Discrepancies:
1. In the event of discrepancy, immediately notify the Owner's Representative.
2. Do not proceed with installation in areas of discrepancy until all such discrepancies have been fully resolved.
3. Failure to notify the Owner's Representative and give written notice of discrepancies shall constitute acceptance by the Contractor of existing conditions as fit and proper to receive work.

3.2 CONCRETE FORMWORK

A. Construction of Forms:
1. General: Construct all required forms to be substantial, sufficiently tight to prevent leakage of concrete paste, and able to withstand excessive deflection when filled with wet concrete.
2. Layout:
   a. Form for all required cast-in-place concrete to the shapes, sizes, lines and dimensions indicated on the Drawings.
   b. Exercise particular care in the layout of forms to avoid necessity for cutting concrete after placement.
   c. Make proper provisions for all openings, offsets, recesses, anchorages, blocking and other features of the Work as shown or required.
   d. Perform all forming required for Work of other trades and do all cutting and repairing of forms required to permit such installation.
   e. Carefully examine the Drawings and Specifications and consult with other trades as required relative to providing for pipe and conduit penetrations, reglets, chases and other items in the forms.
3. Imbedded Items: Set all required steel frames, angles, bolts, inserts and other such items required to be anchored in the concrete prior to concrete being placed.
4. Bracings:
   a. Properly brace and tie the forms together so as to maintain position and shape and to ensure safety to workmen.
   b. Construct all bracing, supporting members and centering of ample size and strength to safely carry, without excessive deflection, all dead and live loads to which they may be subjected.
   c. Properly space the forms apart and securely tie them together, using metal spreader ties that give positive tying and accurate spreading.
5. Wetting: Keep forms sufficiently wetted to prevent joints from opening up before concrete is placed.

B. Plywood Forms:
1. Design: Nail the plywood panels directly to studs and apply in a manner to minimize the number of joints.
2. Joints: Make all panel joints tight butt joints with all edges true and square.

C. Footing Forms:
1. Wood Forms: All footing forms shall be wood unless otherwise specifically approved by the Owner's Representative, or as specified in paragraph 3.2(C)(2).
2. Earth Forms:
a. Side walls for footings may be of earth provided the soil will stand without caving and the sides of the bank are made with a neat cut to the minimum dimensions indicated on the Drawings.
b. For excavation and backfill of earth forms, conform with applicable provisions of Section 131101.

D. Reuse of Forms:
1. Reuse of forms shall be subject to advance approval of the Owner's Representative.
2. Except as specifically approved in advance by the Owner's Representative, reuse of forms shall in no way delay or change the schedule for placement of concrete from the schedule obtainable if all forms were new.
3. Except as specifically approved in advance by the Owner's Representative, reuse of forms shall in no way impart less structural stability to the forms nor less acceptable appearance to finished concrete.

E. Removal of Forms:
1. General:
a. In general, side forms of footings may be removed seven (7) days after placement of concrete, but time may be extended if deemed necessary by the Owner's Representative.
b. Forms for footings, foundations, grade beams, slabs, walls, and other formed concrete may be removed fourteen (14) days after placement of concrete.
2. Removal:
a. Use all means necessary to protect workers, passersby, the installed Work of other trades and the complete safety of the structure.
b. Cut nails and tie wires or form ties off flush, and leave all surfaces smooth and clean.
c. Remove metal spreader ties on exposed concrete by removing or snapping off inside the wall surface and pointing up and rubbing the resulting pockets to match the surrounding areas.
d. Flush all holes resulting from the use of spreader ties and sleeve nuts using water, and then solidly pack throughout the wall thickness with cement grout applied under pressure by means of a grouting gun; grout shall be one-part Portland Cement to 2-1/2 parts sand; apply grout immediately after removing forms.

3.3 CONCRETE REINFORCEMENT

A. Bending:
1. General:
a. Fabricate all reinforcement in strict accordance with the Drawings.
b. Do not use bars with kinks or bends not shown on the Drawings.
c. Do not bend or straighten steel in a manner that will injure the material. (When opposite end is already encased in concrete.)
2. Design:

a. Bend all bars cold.
b. Make bends for stirrups and ties around a pin having a diameter of not less than two (2) times the minimum thickness of the bar.
c. Make bends for other bars, including hooks, around a pin having a diameter of not less than six (6) times the minimum thickness of the bar.

B. Placing:
1. General: Before the start of concrete placement, accurately place all concrete reinforcement, positively securing and supporting by concrete blocks, metal chairs or spacers, or by metal hangers.
2. Clearance:
a. Preserve clear space between bars of not less than one and one-half (1-1/2) times the nominal diameter of the round bars.
b. In no case let the clear space be less than one and one-half (1-1/2) inches nor less than one and one-third (1-1/3) times the maximum size of the aggregate.
c. Provide the following minimum concrete covering of reinforcement:
1) Concrete deposited against earth: three (3) inches minimum.
2) Concrete below grade deposited against forms: two (2) inches minimum.
3) Concrete elsewhere: As indicated on Drawings or otherwise approved by the Owner's Representative.
3. Splicing:
a. Horizontal Bars:
1) Place bars in horizontal members with minimum lap at splices sufficient to develop the strength of the bars.
2) Bars may be wired together at laps except at points of support of the member, at which points preserve clear space described above.
3) Whenever possible, stagger the splices of adjacent bars.
4) Splice forty (40) bar diameters minimum.
5) Provide non-contact lap slices for shotcrete.
b. Wire Fabric: Make all splices in wire fabric at least one and one-half (1-1/2) meshes wide.
c. Other Splices: Make only those other splices that are indicated on the Drawings or specifically approved by the Owner's Representative.
4. Dowels: Place all required steel dowels and securely anchor them into position before concrete is placed.
5. Obstructions: In the event conduits, piping, inserts, sleeves and other items interfere with placing reinforcement as indicated on the Drawings or otherwise required, immediately consult with the Owner's Representative and obtain approval of a new procedure prior to placing concrete.

C. Cleaning Reinforcement: Steel reinforcement, at the time concrete is placed around it, shall be free from rust scale, loose mill scale, oil, paint and all other coatings which will destroy or reduce the bond between steel and concrete. Bend down all tie wire away from the top of the pool deck. Maintain a 2" clear from top of concrete to the tie wire.

3.4 SHOTCRETE REINFORCEMENT

A. The maximum size of reinforcement shall be No. 5 bars unless it can be demonstrated by preconstruction tests that adequate encasement of larger bars can be achieved. When

No. 5 or smaller bars are used, there shall be a minimum clearance between parallel reinforcement bars of 2-1/2 inches (64 mm). When bars larger than No. 5 are permitted, there shall be a minimum clearance between parallel bars equal to six diameters of the bars uses. When two curtains of steel are provided, the curtain nearest the nozzle shall have a minimum spacing equal to 12 bar diameters and the remaining curtain shall have a minimum spacing of six bar diameters.

B. Lap splices in reinforcing bars shall be by the non-contact lap splice method with at least 2 inches clearance between bars. The enforcement agency may permit the use of contact lap splices when necessary for the support of the reinforcing provided it can be demonstrated by means of preconstruction testing, that adequate encasement of the bars at the splice can be achieved, and provided that the splices are placed so that a line through the center of the two spliced bars is perpendicular to the surface of the shotcrete work.

3.5 CAST-IN-PLACE CONCRETE

A. Conveying and Placing Concrete:
1. Before placing concrete, mixing and conveying equipment shall be well cleaned, and the forms and space to be occupied by concrete shall be thoroughly cleaned and wetted. Ground water shall be removed until the completion of the work.
2. No concrete shall be placed in any unit of work until all formwork has been completely constructed, all reinforcement has been secured in place, all items to be built into concrete are in place, and form ties at construction joints tightened.
3. Concrete shall be conveyed from mixer to place of final deposit in such a way to prevent the separation or loss of ingredients. It shall be placed as nearly as practicable in its' final position to avoid rehandling or flowing. Concrete shall not be dropped freely where reinforcing bars will cause segregation, nor shall it be dropped freely more than six (6) feet. Use tremies, spouts and dump boxes in deep sections. Vibrators are not acceptable for facilitating concrete transport.
4. Concrete shall be tamped and spaded to insure proper compaction into all parts of forms and around reinforcement. A mechanical vibrator shall be used to thoroughly compact the concrete. Vibration must be by direct action in the concrete and not against forms or reinforcement.
5. Mixing and transport time as indicated in ASTM C94 is required. If air temperatures are between 85° and 90° F the delivery time is to be reduced to 75 minutes. When air temperatures are in excess of 90° F the delivery time should be reduced to 60 minutes.
6. Truck mixes without batch certificates will be rejected.

B. Construction Joints / Expansion Joints: Construction joints and expansion joints shall be provided at locations and in the manner shown on the Drawings. With exception of existing concrete / new shotcrete joints, use PVC bulb-type waterstops appropriate for design condition between all concrete pours / lifts to avoid cold joints. Waterstops shall be placed in such a way to protect reinforcing steel from rust and oxidation. All expansion joints must be the full depth of the concrete section in which they are located.

C. Slab Finishes: Concrete slabs shall be compacted and screeded uniformly to grades shown. Push large aggregates below the surface with a screen tamper, screed and bull float. As soon as the surface becomes workable, it shall be wood floated, then finished as indicated on the Drawings to a uniform smooth, true surface in a neat and workman-

like manner. Carefully coordinate slab finish requirements with other trades (ceramic tile, pool plaster) to ensure concrete finish is appropriate substrate for final finish material.

1. Contractor shall provide three mock-up deck samples, minimum 3'x 3', with a wedge anchor installed in one sample. These (3) samples shall be constructed; one with a light broom finish, one (1) with a medium broom finish and one (1) with a heavy broom finish for determination and selection of an appropriate deck finish. Each sample shall be edged on all four sides to demonstrate a 3/4" radius edge. Anchor installation shall demonstrate acceptable interface between anchor and the top of deck. Deck samples shall remain on job site through final inspection for reference.
2. Pool Floor Slab: Heavy Wire Broom Finish.

D. Protection and Curing:

1. Concrete shall be protected from injurious action of the elements and defacement of any nature during construction.
2. All forms must be kept wet to prevent drying out of the concrete.
3. All concrete surfaces including footings must be kept wet for at least seven (7) days after concrete is placed.
4. Apply the appropriate curing materials, as specified in 2.3 of this Section, immediately after finishing slabs. Application shall be as specified by the manufacturer.

E. Form Removal:

1. Take care in removing forms so that surfaces are not marred or gouged and that corners are true, sharp and unbroken.
2. No steel spreaders, ties or other metal shall project from or be visible on any concrete surfaces.

F. Defective Work:

1. Should the strength of any concrete for any portion of the work indicated by tests of molded cylinders and core tests fall below minimum 28 days strength specified or indicated, concrete will be deemed defective work and shall be replaced.
2. Concrete work that is not formed as indicated, is not true to intended alignment, not plumb or level where so intended, not true to intended grades or elevations, not true to specified or selected finish, contains sawdust shavings, wood, or embedded debris, which exhibits cracks or contains fine or coarse sulfide particles, or expansive aggregates detrimental to performance or appearance of the concrete shall be deemed defective.
3. Promptly perform work required to replace and properly clean (by sandblasting if necessary) any defective concrete panels (control joint or expansion joint to control joint or expansion joint), at Contractor's expense, including all expense of additional inspection, tests, or supervision made necessary as a result of defective concrete.

3.6 EXPANSION JOINTS

A. Temperatures: Do not install sealants when air temperature is less than 40°F.

B. Tooling: Tool exposed joints to a slightly concave surface using slicking materials recommended by the manufacturer. The tooling procedure shall press sealant against

the sides of the joint. No materials shall be left "feathered" out or smeared on the abutting materials. Completed joints shall have a uniform professional appearance.

C. Joint Construction: Sealant joint width, thickness and cross-sectional profile to be constructed in strict accordance with the sealant manufacturer's recommendations.

D. Sand: At the appropriate time cover the sealant with sand to provide a sanded finish.

3.7 CLEAN-UP

A. Upon completion of the Work of this Section, immediately remove all swimming pool concrete materials, debris and rubbish occasioned by this Work to the approval of the Owner's Representative.

END OF SECTION 131102

SECTION 131103 - SWIMMING POOL SHOTCRETE

PART 1 - GENERAL

1.1 WORK INCLUDED

A. Provide labor, materials and equipment as required to install wet mix shotcrete for swimming pool structures as indicated on the Drawings and herein specified.

1.2 QUALITY ASSURANCE

A. Qualifications of Workers:
   1. The entity performing the work of this Section shall have been successfully engaged in the respective trade for at least five (5) years immediately prior to commencement of the Work.
   2. For actual construction operations, use only trained and experienced workers with a minimum of three (3) years' experience with the materials and methods specified.
   3. Provide at least one person who shall be present at all times during execution of the work of this Section, with a minimum of five (5) years' experience with the type of materials being installed, the referenced standards, and who shall direct all Work performed under this Section.

B. Standards: Except as otherwise indicated, provide shotcrete per American Concrete Institute Standard ACI 506. In addition, conform to recommendations contained in "Shotcrete," Brochure G-84 as published by the Gunite Contractors Association, Sylmar, California and the California Building Code (latest edition).

C. Mix Design: The Contractor shall submit a mix design stamped and signed by a licensed engineer for approval by the Owner's Representative prior to any placement of shotcrete. Mix design shall indicate source of aggregate and brands of cement and admixtures used. All mix designs shall take character of locally available aggregate into consideration and make adjustments as necessary to conform with specified design criteria.

D. Testing and Inspection: A test panel shall be shot, cured, cored or sawn, examined and tested (representing the most congested and difficult project scenario) prior to commencement of the project in accordance with ASTM C1140. All project conditions and personnel shall be represented in the test panel. Additionally, one test panel shall be provided for each 50 yards (or portion thereof) of shotcrete placed for each day or each nozzleman, whichever is greater. The size of the strength test panel shall be per the direction of the Special Shotcrete Inspector. At least three (3) cores shall be taken from each test panel. (At least three (3) cores shall be taken from the completed work for each day of shotcrete operation.) Testing shall be performed by the Owner's designated Testing Lab and comply with Section 1908A.10, California Building Code. Continuous inspection of the shotcrete operation by a deputy inspector provided by the Owner shall be required. Inspection of shotcrete work shall comply with Section 1908A of California Building Code, and coring, sampling, soaking and testing per 1908A.5 and 1908A.10 of California Building Code. Contractor shall provide test panels for all required tests. The Contractor shall provide the Owner and Testing Lab 48 hours notice before the start of shotcrete operations.

E. Tolerances: Construct all swimming pool shotcrete straight, true, plumb and square within a tolerance horizontally of one in 200 and a tolerance vertically of one in 2000.

1.3 SUBMITTALS AND SUBSTITUTIONS

A. Provide submittals in conformance with the requirements of Section 013300 and ACI 506.2.

B. Materials List: Within thirty (30) days after issuance of Notice to Proceed, and before shotcrete materials are delivered to the project site, submit to the Owner a complete list of materials proposed to be used in this portion of the Work, showing manufacturer's name and catalog number of all items such as admixtures and curing membranes, and the name and address of the supplier of cement and aggregate to be used.

C. Submit proof of qualifications as specified in Article 1.2.A of this Section.

1.4 PRODUCT HANDLING

A. Protection: Use all means necessary to protect shotcrete materials before, during and after installation and to protect the installed Work specified in other Sections.

B. Replacements: In the event of damage, immediately make all repairs and replacements necessary to the approval of the Owner and at no additional cost to the Owner.

PART 2 - PRODUCTS

2.1 MATERIALS

A. Cement: Cement shall be Type II Portland Cement conforming to ASTM C150. Cement type shall be the same for all shotcrete work.

B. Aggregate: ASTM C33, washed hard dense durable clean sharp sand from approved pit, free of organic matter and opaline, feldspar, or silicous magnesium substances and containing not more than 3% by weight of deleterious substances. Maximum size aggregate for shotcrete is ¾" per CBC 1908A.3. When tested for organic impurities by ASTM C40 method, fine aggregate color not darker than reference standard color. When tested for soundness by ASTM C88 method, grading No. 2 of ASTM C1436, loss after 5 cycles not over 10% of fine aggregate.

C. Water: Potable, clean, fresh, free from acid, alkali, organic matter or other impurities liable to be detrimental to the shotcrete.

D. Admixtures: Admixtures shall conform to ASTM C1141 and only be used upon approval of the Owner's Representative.

PART 3 - EXECUTION

3.1 EXECUTION

A. Inspection:
   1. Prior to all Work of this Section carefully inspect the installed Work of other trades and verify that all such Work is complete to the point where this installation may properly commence.

2. Verify that items to be imbedded in shotcrete are in place and that shotcrete may be placed to the lines and elevations shown on the Drawings, with all required clearance from reinforcement.

B. Discrepancies:
1. In the event of discrepancy, immediately notify the Owner's Representative.
2. Do not proceed with installation in areas of discrepancy until all such discrepancies have been fully resolved.
3. Failure to notify the Owner's Representative and give written notice of discrepancies shall constitute acceptance by the Contractor of existing conditions as fit and proper to receive the Work.

3.2 PREPARATION

A. General:
1. Thoroughly clean all areas where shotcrete is to be placed to insure proper bonding of shotcrete.
2. Where shotcrete is to be placed against smooth surfaces (i.e., cast-in-place concrete), sandblast surfaces to receive shotcrete to provide clean aggregate surface, thereby insuring proper bond between materials.

B. Ground Wires: Adequate ground wires, to be used as screeds, shall be installed to establish the thickness and surface planes of the shotcrete work. Ground wires shall be placed so that they are tight and true to line and grade and in such a manner that they can be easily tightened.

3.3 PROPORTIONING AND MIXING

A. Accurately control proportion of water to Portland cement to produce thorough and uniform hydration of the shotcrete that, when shot, forms a homogeneous mass containing neither sags nor dry sand formation.

B. Shotcrete shall have a minimum compressive strength of 4,000 PSI at 28 days. Shotcrete material shall have a water/cement ratio of 0.40-0.45 per ACI 506R, Chapter 6, Proportioning and Preconstruction Testing; Section 6.3.3, Wet Mix Process.

C. Discontinue shotcrete work if the time between the addition of mixing water to cement and aggregate, or cement to aggregates, and placement of shotcrete exceeds ninety (90) minutes when the ambient temperature is below 85 degrees Fahrenheit, or exceeds sixty (60) minutes when the ambient temperature is above 85 degrees Fahrenheit. Batch, mix and deliver wet-mixture shotcrete per ASTM C94 or C685.

D. Hot Weather Shotcreting – Unless otherwise specified, do not place shotcrete when shotcrete temperature is above 95°F, unless prequalification testing shows that the required quality of materials can be achieved at high temperatures. The temperature of reinforcement and receiving surfaces shall be below 90°F prior to shotcrete placement.

E. Cold Weather Shotcreting – Unless otherwise specified, shooting may proceed when ambient temperature is 40°F and rising. Stop shooting when ambient temperature is 40°F and falling, unless measures are taken to protect the shotcrete. Shotcrete material temperature, when shot, shall not be less than 50°F. Do not place against frozen surfaces

3.4 SHOTCRETE PLACING, FINISHING, AND CURING

A. Operations: Utilize a standard type of air compressor, capable of providing a minimum of 250 cubic feet of air per minute per nozzle.

B. Placing: Except when shooting reinforcing, hold the nozzle perpendicular to and 2-1/2 to 3 feet from surface. At reinforcing bars, hold the nozzle so as to direct shotcrete behind the bars, and shoot each side of each bars separately. A nozzleman's helper equipped with an air jet shall precede the nozzle and blow out rebound or sand lodged behind bars, on forms, or placed shotcrete. Placing shotcrete horizontal members from the top is not allowed unless approved methods are employed to eliminate all rebound. Material shall emerge from the nozzle in a uniform flow. If flow becomes intermittent for any reason, direct the nozzle away from the surface until the flow is again steady and constant. Do not reuse rebound or loose sand for any purpose.

C. Puddled Shotcrete: Use of "puddled shotcrete" in which the air pressure is reduced and the water content is increased to facilitate placing in difficult locations is not allowed. Do not place shotcrete where nozzle stream cannot impinge directly on the involved surface. Where difficult shooting conditions occur, obtain proper results by maintaining correct air pressure and water ratio and reduce supply of material.

D. Construction Joints: Form joints with sloping beveled edges. Clean and dampen the hardened joint surfaces before placing additional shotcrete. Square edged construction joints are not allowed. The film of laitance which forms on the surface of the shotcrete shall be removed within approximately two hours after application by brushing with a stiff broom. If this film is not removed within two hours, it shall be removed by thorough wire brushing or sand blasting. Construction joints over eight hours old shall be thoroughly cleaned with air and water prior to receiving shotcrete.

E. Finishing: Rod exposed surfaces to true planes and lines on reaching the thickness and plane established by forms and ground wires. Tamp and wood float surfaces level and provide a rough raked finish. Carefully coordinate finish requirements with other trades (ceramic tile, pool plaster) to ensure shotcrete finish is appropriate substrate for final finish material.

F. Curing: Keep shotcrete continuously damp for not less than seven (7) days after placing. Use sealed curing sheeting or other approved curing method where water curing is not feasible. Do not use curing compound of any kind.

3.5 DEFECTIVE WORK

A. Cut out, remove and replace, or repair to the satisfaction of the Owner's Representative, shotcrete not meeting minimum strength, not true, plumb or level, not to required elevations, containing cracks detrimental to performance or appearance, containing shavings, debris or with honeycombs or voids.

B. Promptly perform Work required to repair, patch, replace, render properly cleaned surfaces (by sandblasting if necessary) or otherwise make good any defective shotcrete at Contractor's expense, including all expense of additional inspection, tests, or supervision made necessary as a result of defective shotcrete.

3.6 CLEAN-UP

A. Upon completion of the Work of this Section, immediately remove all swimming pool shotcrete materials, debris and rubbish occasioned by this work to the approval of the Owner's Representative.

END OF SECTION 131103

SECTION 131104 - SWIMMING POOL CERAMIC TILE

PART 1 - GENERAL

1.1 WORK INCLUDED

A. Swimming pool ceramic tile detailed on the Drawings, including, but not limited to, the following:
   1. Gutter Bullnose Tile (Rim flow pool)
   2. Bond Beam / Waterline Tile (Rim flow pool)
   3. Lane Line / Target Tile / 4'-6" Depth Tile
   4. Depth / Caution Marker Tile (on top of rim flow bond beam and waterline.)
   5. Trim Tile (at steps)

1.2 QUALITY ASSURANCE

A. Qualifications of Workers:
   1. The entity performing the work of this Section shall have been successfully engaged in the respective trade for at least five (5) years immediately prior to commencement of the Work.
   2. For actual construction operations, use only trained and experienced workers with a minimum of three (3) years' experience with the materials and methods specified.
   3. Provide at least one person who shall be present at all times during execution of the work of this Section, with a minimum of five (5) years' experience with the type of materials being installed, the referenced standards, and who shall direct all Work performed under this Section.

B. Standards: In addition to complying with all pertinent codes and regulations:
   1. Manufacture of all tile shall be in accordance with ANSI A-137.1.
   2. Install ceramic tile in accordance with the recommendations contained in the 2022 "Handbook for Ceramic Tile Installation" of the Tile Council of America, Inc.

C. Tolerances: Install all swimming pool ceramic tile straight, true, plumb and square within a tolerance horizontally of one in 200 and a tolerance vertically of one in 500. Waterline and gutter bullnose tile shall be level to 1/8" (+/- 1/16") around entire perimeter of swimming pools.

1.3 SUBMITTALS AND SUBSTITUTIONS

A. Provide submittals in conformance with the requirements of Section 013300.

B. Samples: Submit samples of each color and pattern in the specified groups. Character samples can be representative for review prior to screening of actual tile.

C. Master Grade Certificate: Prior to opening ceramic tile containers, submit a Master Grade Certificate, signed by the manufacturer of the tile used and issued when the shipment is made, stating the grade, kind of tile, identification marks for the tile containers, and the name and location of the Project.

D. Specifications: Submit manufacturer's recommended installation specifications for the Work.

E. Submit proof of qualifications as specified in Article 1.2.A of this Section.

1.4 PRODUCT HANDLING

A. Delivery: Deliver all materials to the Project Site in the manufacturer's original unopened containers with all labels intact and legible.

B. Storage: Store all materials under cover in a manner to prevent damage and contamination, and store only the specified materials at the Project site.

C. Protection: Use all means necessary to protect swimming pool ceramic tile before, during and after installation and to protect the installed Work specified in other Sections.

D. Replacements: In the event of damage, immediately make all repairs and replacements necessary to the approval of the Owner's Representative.

PART 2 - PRODUCTS

2.1 TILE

A. Gutter Bullnose Tile:
1. Material: All gutter bullnose tile shall be unglazed ceramic tile with absorption rate of less than 1% as manufactured by Dal-Tile or equal. Contact Kylee Midura kylee.midura@daltile.com (858) 344-0019.
2. Size: 1 x 2 inches (#C-701)
3. Color: Blue throughout the body of the tile #D-621 "Nautical Blue".

B. Bond Beam / Waterline Tile:
1. Material: All bond beam tile shall be unglazed ceramic mosaic tile with absorption rate of less than 1% as manufactured by Dal-Tile or equal.
2. Size: 1 x 1 inches
3. Color: Blue throughout the body of the tile #D-621 "Nautical Blue".

C. Lane Line / Target Tile / 4'-6" Depth Tile:
1. Material: Group 3 quality, frost proof unglazed ceramic mosaic tile with absorption rate of less than 1% as manufactured by Dal-Tile or equal.
2. Size: 1 x 1 inches.
3. Color: Dal-Tile #D-311, 'Black', in 25 Yard direction. Dal-Tile #D-023, 'Galaxy Blue' in 50M direction and at 4'-6" depth tile.

D. Depth / Caution Marker Tile (on top of bond beam and waterline at rim flow pool)
1. Material: Custom FT and IN series ceramic tile with absorption rate of less than 1% as manufactured by 'Inlays, Inc'.
2. Size: 1 x 1 inches with 6" tall numbers and 4" tall letters.
3. Color: Integral color throughout the body of the tile Dal-Tile #D-014, 'Desert Gray' letters and numbers on #D-621 'Nautical Blue' field.

E. Trim Tile (on underwater steps)
1. Material: Group 3 quality, frost proof unglazed ceramic tile with absorption rate of less than 1% as manufactured by Dal-Tile or equal.
2. Size: 1 x 1 inches with S-812 quarter round. Color: Dal-Tile #D-311. 'Black' or

3. Size: 2 x 6 inches with integral quarter round. Color: Black, non-slip. Inlays #CPC00022.

2.2 MORTAR

A. Laticrete 3701 fortified mortar #LCR-37-1017.

B. Site mortar mix shall comply with ASTM C270 standards:
   1. Sand for Mortar: Comply with requirements of fine aggregate for concrete.
   2. Cement: Type I Portland Cement, conforming to ASTM C150.
   3. Hydrated Lime: Conforming to ASTM C206 or 207, Type S.
   4. Water: From a potable source.

2.3 THIN SET MORTAR

A. Laticrete 254 Platinum. Laticrete, Custom or equal.

B. Water: From a potable source.

C. Mortar shall meet ASTM C627.

2.4 GROUT

A. All tile grout shall be waterproof grout complying with the recommendations of TCA and ANSI A118.6 (4) standards. Grout color shall be grey for dark backgrounds, white for light backgrounds (verify colors with Architect).

2.5 OTHER MATERIALS

A. All other materials, not specifically described but required for a complete and proper installation of ceramic tile as indicated on the Drawings, shall be new, first quality of their respective kinds, and subject to the approval of the Owner's Representative.

PART 3 - EXECUTION

3.1 SURFACE CONDITIONS

A. Inspection:
   1. Prior to all Work of this Section, carefully inspect the installed Work of other trades and verify that all such Work is complete to the point where this installation may properly commence.
   2. Verify that ceramic tile can be installed in accordance with the original design and all referenced standards.

B. Discrepancies:
   1. In the event of discrepancy, immediately notify the Owner's Representative.
   2. Do not proceed with installation in areas of discrepancy until all such discrepancies have been fully resolved.
   3. Failure to notify the Owner's Representative and give written notice of discrepancies shall constitute acceptance by the Contractor of existing conditions as fit and proper to receive its Work.

3.2 INSTALLATION

A. Method:

1. Install all ceramic tile in strict accordance with installation method P601-90 of the 2022 Handbook for Ceramic Tile Installation of the Tile Council of America, Inc.
2. Be certain to install all ceramic tile perfectly level, flush, plumb, and to the finish grades and elevations indicated on the Drawings.

B. Interface:
1. Carefully establish and follow the required horizontal and vertical elevations to insure proper and adequate space for the work and materials of other trades.
2. Coordinate and cooperate as required with other trades to insure proper and adequate interface of ceramic tile Work with the Work of other trades.

3.3 GROUTING

A. Follow grout manufacturer's recommendations as to grouting procedures and precautions.

B. Remove all grout haze, observing grout manufacturer's recommendations as to use of acid and chemical cleaners.

3.4 EXTRA STOCK

A. Provide one (1) unopened box of extra tile for 2.1A, 2.1B, and 2.1C for Owners use at a future time.

3.5 CLEAN-UP

A. Upon completion of the swimming pool ceramic tile installation, thoroughly clean and polish the exposed surfaces of tile work. Completely clean work area of debris and rubbish occasioned by this Work and dispose of to the approval of the Owner’s Representative.

END OF SECTION 131104

SECTION 131105 - SWIMMING POOL PLASTER

PART 1 - GENERAL

1.1 WORK INCLUDED

A. Swimming pool plaster and waterproofing of swimming pool structures as indicated on the Drawings and herein specified.

B. Start-up and operation instructions to Owner's operations and maintenance personnel and properly balance swimming pool water chemistry until the Owner takes occupancy.

1.2 QUALITY ASSURANCE

A. Qualifications of Workers:
   1. The entity performing the work of this Section shall have been successfully engaged in the respective trade for at least five (5) years immediately prior to commencement of the Work.
   2. For actual construction operations, use only trained and experienced workers with a minimum of three (3) years' experience with the materials and methods specified.
   3. Provide at least one person who shall be present at all times during execution of the work of this Section, with a minimum of five (5) years' experience with the type of materials being installed, the referenced standards, and who shall direct all Work performed under this Section.

B. Standards: Swimming pool plaster shall conform with requirements of Chapter 31B of California Building Code, latest edition. In addition, meet requirements of applicable portions of most current edition of the "Technical Manual," National Plasterers Council, Wauconda, Illinois.

C. Start-up:
   1. Furnish a swimming pool water chemistry consultant, with a minimum of five (5) years' experience, possessing either AFO (Aquatic Facility Operator) or CPO (Certified Pool Operator) certification(s), to supervise and properly balance swimming pool water chemistry.
   2. Demonstrate to the Owner that all systems are fully operational and that calcium hardness, total alkalinity, chlorine residual and pH levels are within specified limits.
   3. Standards: Furnish labor and chemicals as required to condition the water properly to the following specifications:
      a. Calcium Hardness: 200-400 parts per million (PPM)
      b. Total Alkalinity: 80-100 PPM, minimum
      c. Chlorine Residual: 1.00 to 2.00 PPM
      d. pH Factor: 7.2 to 7.6

1.3 SUBMITTALS AND SUBSTITUTIONS

A. Provide submittals in conformance with the requirements of Section 013300.

B. Submit proof of qualifications as specified in Article 1.2 and 1.2.C.1 of this Section.

1.4 PRODUCT HANDLING

A. Delivery: Deliver materials to the Project Site in the manufacturer's original unopened containers with all labels intact and legible.

B. Storage: Store materials under cover in a manner to prevent damage and contamination, and store only the specified materials at the Project Site.

C. Protection: Use all means necessary to protect the swimming pool plaster before, during, and after installation and to protect the installed Work specified in other Sections.

D. Replacements: In the event of damage, immediately make all repairs and replacements necessary to the approval of the Owner.

1.5 ENVIRONMENTAL CONDITIONS

A. No plastering shall be done under unsuitable conditions of weather or temperature. No plastering shall be done when prevailing temperature is 40 degrees Fahrenheit or less.

B. Do not install plaster during rain and, if rain commences after plastering has begun, immediately protect the plaster from rain by all means necessary until the plaster has set.

C. Do not install plaster during wind greater than 10 mph and, if wind commences after plastering has begun, immediately protect the plaster from wind by all means necessary until the plaster has set.

PART 2 - PRODUCTS

2.1 CEMENT / AGGREGATE

A. Luna Quartz® tiny pebble finish by Wet Edge Technologies. Altima® quartz finish by Wet Edge Technologies. Pebble-Fina® pool finish by Pebble Technologies.

2.2 COLOR

A. All swimming pool plaster shall be white in color. Wet Edge Technologies shall be Luna Quartz® “Polar White”. Wet Edge Technologies shall be Altima® “White”. Pebble Technology shall be Pebble-Fina® “Classico”. Contractor to obtain written approval on selected pebble color from the local Health Department prior to installation. Submit cut sheet, color sample and written approval for review by Architect and Owner

2.3 WATER

A. Water for swimming pool plaster shall be clean and free from injurious amounts of acid, alkali, and organics.

2.4 GUTTER, PUMP PIT, BACKWASH PIT & SURGE CHAMBER WATERPROOFING

A. Xypex, Miracote Miraflex Membrane C, or approved equal. Mix and apply per manufacturer’s recommendations for specific application. Color shall be Gray.

PART 3 - EXECUTION

3.1 SURFACE CONDITIONS

A. Inspection:
1. Prior to Work of this Section, carefully inspect the installed Work of other trades and verify that all such Work is complete to the point where this installation can properly commence.
2. Verify that swimming pool plaster can be installed in accordance with the original design and all referenced standards, including proprietary application techniques and application training/certifications.

B. Discrepancies:
1. In the event of discrepancy, immediately notify the Owner's Representative.
2. Do not proceed with installation in areas of discrepancy until all such discrepancies have been fully resolved.
3. Failure to notify the Owner's Representative and give written notice of discrepancies shall constitute acceptance by the Contractor of existing conditions as fit and proper to receive the Work.

3.2 INSTALLATION OF GUTTER, PUMP PIT, BACKWASH PIT & SURGE CHAMBER WATERPROOFING

A. Provide two (2) coats of the specified gutter and surge chamber waterproofing prior to plastering the swimming pool. Prepare surfaces to receive waterproofing and cure in conformance with manufacturer's recommendations. Provide steel trowel application method to ensure uniform smooth, dense surface finish.

3.3 INSTALLATION OF POOL PLASTER

A. Outdoor Pools or Spas:
1. Completion of other work: DO NOT commence plastering of swimming pool(s) or spa(s) until the following conditions have been met:
a. The Health Department and/or other governing agencies have approved the pool(s) and/or spas) for plaster.
b. All concrete pool deck construction is complete and the pool decks have been thoroughly cleaned.
c. All landscaping in areas adjacent to the pool(s) or spa(s) is complete and the landscape irrigation system is operable.
d. All painting in the pool area is complete.
e. All welding and grinding in locations adjacent to the pool area are complete.
f. The backwash sewer connection is complete.
g. Pool(s) and/or spa(s) area(s) perimeter fencing installation is complete.
h. All trash and debris have been removed from areas adjacent to the pool(s) or spa(s), particularly those areas that are normally upwind from the pool(s) or spa(s).
i. All dust raising construction and/or activities in areas adjacent to the pool(s) or spa(s) are complete or mitigated.
j. The circulation pump(s) is/are operational.

k. The mechanical system has been flushed sufficiently to remove all dirt and debris from the piping system.
l. All necessary chemicals (Chorine, pH adjuster, Sodium Bicarbonate and Calcium Chloride or any other required chemicals) are on site and ready for use.
m. Obtain written approval from the Owner and the Architect.

B. Indoor Pools or Spas:
1. Completion of Other Work: DO NOT commence plastering of swimming pool(s) or spa(s) until the following conditions have been met:
a. The Health Department has approved the pool(s) and/or spa(s) for plaster.
b. All work above the pool(s) and/or spa(s) is complete.
c. All painting in the pool area is complete.
d. All welding and grinding in locations adjacent to the pool area are complete.
e. The backwash sewer connection is complete.
f. All concrete pool deck construction is complete and the pool decks have been thoroughly cleaned.
g. The circulation pump(s) is/are operation.
h. The mechanical system has been flushed sufficiently to remove all dirt and debris from the piping system.
i. All necessary chemicals (Chlorine, Acid, Sodium Bicarbonate and Calcium Chloride) are on site and ready to use.
j. Obtain written approval from the Owner and the Architect.

C. Contractor accepts all liability from damage done to the pool plaster if the pool(s) or spa(s) is (are) plaster before the completion of the above listed items or without the written approval of the Owner and the Architect.

D. POOL PLASTER AUTHORIZATION FORM:
1. The pool(s) and or spa(s) at Highland High School is/are hereby approved for the installation of the pool plaster. Pursuant to the requirements of specification section 131105, paragraph 3.3.

_____ _____
Owner Date

_____ _____
Architect / Project Manager Date

E. Preparation:
1. Do not apply plaster over dirt, rust, scale, grease, moisture, scuffed surfaces or conditions otherwise detrimental to the formation of a durable plaster finish.
2. Consult with manufacturer on application to specific surfaces being treated. Follow manufacturer's recommendation for curing of cast-in-place concrete or shotcrete surfaces prior to application of plaster.

3. Protect ceramic tile, decking, deck equipment, gratings, fittings and other items by suitable covering or masking.
4. Mask or remove all hardware, hardware accessories, machined surfaces, plates, lighting fixtures and similar items in place not to receive pool plaster. Following completion of plaster for each space or area remove masking. Re-install all removed items utilizing workers skilled in the trades involved.

F. Application:
1. Finish shall be applied to a uniform thickness of 3/8" to ½" over the entire surface. The walls shall be scratch-coated followed by a finish coat. Material applied to the floor after the walls have been applied shall be accelerated to assure uniform setting time throughout the pool surface.
2. Float the plaster to a uniform plane and trowel to a smooth, dense, impervious surface using extreme care to avoid stains.
3. Take special care in finishing around pool fittings, making sure to mask off or plug openings so as not to fill such openings with excess plaster. Be certain to completely enclose pool fittings with plaster to insure a leak-proof seal around pipes, fittings, lights, anchors, etc.
4. Accurately interface with the finish planes of items installed by other trades.
5. Quartz-cement plaster is to be applied by a licensed applicator as approved by the manufacturer, and in accordance with manufacturer's training.

3.4 CURING

A. Preparation: Anticipate the need for required equipment and have all such equipment immediately available for use upon completion of pool plastering.

B. Pool Filling:
1. After the plaster has sufficiently dried and before drying has proceeded to a damaging point, cure the plaster by gradually filling the pool with water, preventing all damage to finished plaster surfaces.
2. Flow the water continuously until the pool is filled.
3. When the weather is hot and/or water pressure is low, keep the pool walls damp while the pool is filling.
4. Coordinate with Contractor to ensure that the pool is continuously monitored while filling to prevent overfill.

3.5 EQUIPMENT ACTIVATION

A. All water chemistry and filtration mechanical equipment shall be operational upon filling of pool after plaster. Chemicals and other related support items as supplied by Contractor, shall be in supply at start-up.

B. For the first fourteen (14) calendar days after completion of the pool plaster, brush all plastered surfaces at least twice a day and coordinate with General Contractor to ensure that the plaster is carefully maintained after the initial fourteen-day period. In addition, coordinate with the Contractor to ensure that pool filtration equipment is continuously running during the initial fourteen-day period.

C. Start-up and provide qualified personnel to operate pool equipment for a period not less than fourteen (14) days after the pool is placed in operation, or until the Owner takes occupancy of the facility or letter of substantial completion. During this time,

Contractor shall instruct and supervise the Owner's personnel in the various operating and maintenance techniques involved. Contractor shall be responsible for supply of chemicals during this not less than fourteen (14) day period and at time of turnover to Owner, chemical storage tanks shall be full. (Owner's personnel shall be fully trained and capable of assuming swimming pool maintenance tasks, training may begin before Owner takes occupancy).

3.6 CLEAN-UP

A. Upon completion of swimming pool plaster, remove all materials, equipment and debris occasioned by this Work and leave the job site in a clean and presentable condition. Perform all such clean-up to the approval of the Owner’s Representative.

3.7 WARRANTY

A. All applicators must provide a minimum of five (5) year warranty for application and workmanship additional to the manufacturer’s warranty for product.

END OF SECTION 131105

SECTION 131106 - SWIMMING POOL EQUIPMENT

PART 1 - GENERAL

1.1 WORK INCLUDED

A. Swimming pool equipment items required for this Work as indicated on the Drawings and specified herein.

1.2 QUALITY ASSURANCE

A. Qualifications of Workers:
   1. The entity performing the work of this Section shall have been successfully engaged in the respective trade for at least five (5) years immediately prior to commencement of the Work.
   2. For actual construction operations, use only trained and experienced workers with a minimum of three (3) years experience with the materials and methods specified.
   3. Provide at least one person who shall be present at all times during execution of the work of this Section, with a minimum of five (5) years experience with the type of materials being installed, the referenced standards, and who shall direct all Work performed under this Section.

B. All equipment supplied or work performed shall comply with regulations governing public swimming pools and spas as contained within Chapter 31 of California Building Code, latest edition.

1.3 SUBMITTALS AND SUBSTITUTIONS

A. Provide submittals in conformance with the requirements of Section 013300.

B. Required submittals include:
   1. Swimming Pool Safety Equipment and Maintenance Equipment as specified in Article 2.1 and 2.2 of this Section.
   2. Swimming Pool Fittings, Deck and Mechanical Equipment as specified in Article 2.3-2.13 of this Section.

C. Submit proof of qualifications as specified in Article 1.2.A of this Section.

D. The equipment shown on the plans represent the first listed items in the technical specifications. The Contractor shall be responsible for all required field coordination and installation of any approved equal product to provide a fully working and warranted system. The Contractor shall submit detailed shop drawings for any products used other than the first listed specified items. Contractor provided shop drawings shall include details and quality equal to the original plans and construction documents. The Contractor shall provide any and all required engineering including but not limited to structural and anchorage requirements for any proposed equipment other than the first listed specified equipment. The Contractor is responsible to provide a factory certified representative(s) to start-up and provide on-site training for all swimming pool mechanical equipment provided.

1.4 PRODUCT HANDLING

A. Protection: Use all means necessary to protect swimming pool equipment items before, during and after installation and to protect the installed work specified in other Sections.

B. Replacements: In the event of damage, immediately make all repairs and replacements necessary to the approval of the Owner's Representative.

PART 2 - PRODUCTS

2.1 SAFETY EQUIPMENT

A. First Aid Kit for 50 Persons with two (2) wool blankets: Marine Rescue or approved equal. Quantity as required by the Department of Health, one (1) minimum.

B. Rescue Tubes (minimum 49" long) and Life Ring Buoy (minimum 24" in diameter) U.S. Coast Guard Approved: Marine Rescue or approved equal. Quantity as required by the Department of Health, two (2) minimum.

C. Throw Rope (3/16" diameter) complete with lemon foot, for use with Life Ring Buoy: Kiefer, United Industries, or approved equal. Quantity as required by the Department of Health, two (2) minimum.

D. Rescue Hooks, 16' long x 1-1/2" aluminum pole and stainless-steel mounting hardware: Kiefer, Pentair, or approved equal. Quantity as required by the Department of Health, two (2) minimum.

E. Pool Safety Signs: As required by the Department of Health. Submittal required. Placement at the pool site shall be in conformance with Health Department Inspector. One (1) set minimum.

F. Spine Board: C.J. Penton Aquatics long board with "L" bracket head immobilizer with foam pads and Velcro strap, 4 Velcro body straps, or equal. One (1) required.

G. Eyewash / Shower: Haws model #8309WC CRP combination eyewash / shower, with corrosion resistant protection, and model #9201EF tempered water blending system. Two (2) required. See MEP sheets for water supply piping.

2.2 MAINTENANCE EQUIPMENT

A. Commercial Pool Vacuum: Provide pool vacuum cart with lid-mounted handle, separate lid-mounted bracket for electrical cord, and two rubber-tired ball bearing wheels with grease fittings. Cart and filter shall be fabricated from schedule 304 stainless steel with welds treated and passified. Provide an all-bronze pump with a 1 1/2 hp, 115/230 volt, maximum 20 amp draw @ 120 volts, single phase motor and a 6" bronze trap. Pump shall be UL and NSF listed, have 2" suction and 1 1/2" discharge fittings, and have a brass priming valve with hose bib. Entire pump assembly shall be anchored to vacuum cart with two stainless steel bolts. Provide a 100 foot 10 AWG 3/C SJ electrical cord with ground fault interrupter (GFI) plus. Cord shall be wired to a double pole, 30-amp switch which shall be mounted on pump motor. One (1) required.

B. Heavy Duty Vacuum Hose: 2" x 50', with hose connector. Pentair, Smooth Bore or approved equal. Two (2) required.

C. Utility Pole: 24' fiberglass with connectors. Pentair, Skimlite or approved equal. Two (2) required.

D. Commercial Vacuum Head: 24" wide "flexible" vacuum head. Pentair Model #R201186, or approved equal. One (1) required.

E. Pool Wall Brush: 36" wide professional quality. Pentair or approved equal. One (1) required.

F. Leaf Skimmer: 30" x 8" x 12", professional quality. Pentair, Spectrum or approved equal. One (1) required.

G. Water Quality Test Kit, Professional Grade, Taylor Technologies Model #1741C, LaMotte Model #PRO250-NJ, or approved equal. One (1) required.

H. Pool Robotic Pool Cleaner: The automatic pool cleaner shall be Enduro – Turbo Clean XL50, One (1) required. Capable of operation via 120V, 220V in 50/60 Hz, or 24 VDC incoming power; 242 GPM or 14,530 gallons per hour. Utilize 20, 70, 105, 250 and 1,000 or 2,000 micron filter screens – all constructed of mesh.

1. Warranty: The robotic cleaner shall carry a 7-year anti-corrosion warranty on the stainless-steel frame from the date of product start-up. The cleaner shall carry a two-year warranty against all defects in material and workmanship, from date of product start-up, including all components in the system not including wearable items.

2.3 FITTINGS

A. Main Drain Frame & Grate (18” x 36”): Lawson Aquatics #MLD-SG-1836, Super Sump with VGB Compliant Grates, or approved equal, two (2) required. Provide two (2) Hayward #SP-1056 1-1/2" collector tubes and two (2) #SP-1055 Hayward 1-1/2" hydrostatic relief valve, one per main drain sump. Contractor shall provide to the Owner a Certificate of Compliance, signed by a licensed design professional, for main drain sump(s) and frame(s) and grate(s), as required by the Virginia Graeme Baker Act.

B. Floor Return Inlet 1-1/2” Adjustable: StaRite #08417-0000, United Industries, or approved equal. Seventy-six (76) required.

C. Swimming Pool Underwater Lights: ‘J & J Electronics’ #F5W-120-100-P; White LED with stainless steel face rings, 87 watt lamps and LWC. Stainless steel niches, Pentair #78210600 with 1” hubs, or approved equal. Forty-six (46) required.

D. Junction Box for Underwater Lights, complete with strain reliefs: Hydrel #1719, Appleton, or approved equal. Twenty-three (23) required.

2.4 DECK EQUIPMENT

A. Starting Platform Anchors: KDI Paragon ‘Competitor’ #23140DW, 10” deep, twenty-five (25) required, for concrete deck. ‘Competitor’ #23074, cover for dual wedge, ‘Competitor’ #23303, cover removal tool, two (2) required.

B. Adjustable Starting Platforms: Track Start Competitor, side step #25427 with adjustable backplates and side hand grips, no known equal. Seventeen (17) required.

C. Stanchion Sockets: 1.90" I.D. Bronze. KDI-Paragon 38201TC, no known equal. Twenty-six (26) required.

D. Stanchion Posts: 1.90" O.D. x .145 wall. KDI-Paragon, eight (8) #38106, and eight (8) #38301, no known equal.

E. Rope Anchors: Commercial cup anchor with insert. 'Spectrum' #58316 custom stainless steel, no known equal. Ninety-four (94) required.

F. Racing Lanes: 50M lane with disc to two (2) 25-yard lanes: #200-342000, 'Competitor' 'Anti Wave' or approved equal, verify colors with Owner prior to ordering. Nine (9) required, with two (2) additional 25 yard lanes required. Provide floating water polo goal tethers, eight (8) total. Provide two (2) additional lanes to be utilized with floating water polo goals as side lanes and provide disconnects for 30M to 25M to 25-yard. Provide five (5) dedicated stationary water polo lanes.

G. Racing Lane Reel with Cover: KDI-Paragon #75111SS with cover #75133, no known equal. Five (5) required.

H. Moveable Lifeguard Chair: 1.90" O.D. x .065 wall. KDI-Paragon 20302, Spectrum 20160 or equal. Three (3) required.

I. Adjustable Figure 4 Grab Rails: KDI-Paragon #30302, 1.90" O.D. x .109" wall, no known equal. Three (3) sets required.

J. Recessed Steps, Set of 3: KDI-Paragon #3212, no known equal. Three (3) sets of three required.

K. Cross Braced Ladders: 'Paragon' #42123, with custom 5" wide stair treads, no known equal. Three (3) required.

L. Handrail: KDI Paragon 86" custom, 3 bend, 1.90" O.D. x 0.65" wall. Three (3) required.

M. Anchor Sockets for Grab Rails, Handrails and Ladders: KDI-Paragon 28102, no known equal. Twenty-four (24) required.

N. Stainless Steel Escutcheon Plates for Grab Rails, Handrails and Ladders: Spectrum Model #35214, no known equal. Twenty-four (24) required.

O. Stationary Water Polo Goals: KDI-Paragon 36104, 36201, no known equal. Furnish complete with anchors and nets. Three (3) pair required.

P. Floating Water Polo Goals: 'Antiwave' #AW0550 or equal. One (1) pair complete with nets and tethers.

Q. Disabled Lift: 'Aqua Creek' Mighty Lift 400 #MTY400 with 400 lb. lifting capacity. Furnish complete with Scout Mighty #F-808SA-10, 10" deep anchors, lift cover, extra battery pack and transporter cart. One (1) required.

R. Backstroke Pennants: 'Champion' 3/16" diameter vinyl coated cable #50-175; 'Champion' hardware package #53-030, and 'Champion' 12" x 18" vinyl coated polyester pennants #53-020 Lincoln Equipment, Knorr Systems or equal.

S. 1 Meter Diving Stand: Arcadia Air Products 'Durafirm' #70-231-400, no known equal. Furnish complete with double rails, anchors, and mounting hardware. Two (2) required.

T. 16' Diving Board: Arcadia Air Products 'Maxiflex B' #66-231-330, no known equal. Furnish complete with jury rig poles. Two (2) required.

U. Pool Cover System:

1. A pool cover system as described below shall be provided and shall include all the specified features, without exception. Submittal data must include complete documentation relating to all the specified features and include manufacturer's sales literature, specification sheets, and installation/operation/maintenance manuals. Upon written request by the specifying agent, the following samples must be provided: samples of tubing used for storage reel winding tubes and end frames; a sample winding tube bearing; a sample castor wheel assembly; and a cover sample measuring at least 8" x 11", including weighted side edge, reinforced end edge, and grommet.
2. Cover Material:
   a. Material shall be woven, 10 by 10 count per inch, high-density polyethylene, ultraviolet stabilized film fabric, laminated to both sides of 1/8" thick, closed cell, medium density, white, polyethylene foam. The woven polyethylene film fabric shall be coated on both sides with an ultraviolet stabilized, chemically resistant polyethylene coating. The combination of film, foam and woven components shall be non-toxic, non-absorbent, non-permeable and buoyant. Color shall be blue on upper surface and black on under surface. In addition to the above, cover must meet the following requirements:

Thickness	1/8 inch minus or plus 10%
Foam Density	2 lbs. per cubic foot
Weight	5 oz. per square foot
*Tensile Strength	318 lbs. (ASTM 1682264)
*Tear Strength	60 lbs. (ASTM D2261-71)
*Bursting Strength: (Mullen Tester)	425 psi (ASTM 751-73)
Service Temperature	-40°F to +160°F
K Factor	.25 BTU/sq. ft.-Hr – degrees F/inch (ASTM D2326)
Reinforced Edge Tear Strength	1225 lbs. pull strength, corner to corner
Open Seam Tear Strength	70 lbs.

3. Cover Design Criteria:
   a. Cover panels shall totally cover the surface of the pool without gaps or overlaps with reinforced cutouts to accommodate rounded corners, step areas, rails, etc. Cover panels shall be of the following quantities and sizes:

Qty.	Size
12	13 feet, 8-inch x 75 feet, 1 inch

b. Along end and side edges of each panel, a weighted material shall be sewn in and shall be continuous, non-corrosive and conform to the flat shape of the cover. End edges shall be reinforced with a double layer of polyethylene-coated film fabric and designed in such a manner as to prevent panels from dividing when the covers are being pulled across the water. On all corners, weighted edge shall wrap corners and be itself encapsulated by the two layers of end reinforcement. The entire corner construction shall be reinforced with a 1/8" thick load dispersion plate and non-corrosive grommet.

c. Both ends of each cover panel shall be equipped with no less than three (3) non-corrosive grommets and quick-release loops for easy connection to the storage reel or to the next cover panel. All sewing shall be ultra-violet stabilized and chemically resistant 100% polyester thread. Main body seams shall be welded, glued or heat sealed. Complete mechanical attachment with lock-stitched thread shall be required. Warning labels consistent with the recommendations of the Federal Consumer Protection Agency shall be permanently affixed to each end of each cover panel and to the sides of perimeter panels.

4. Storage Reels:

a. The following quantity, type, and size of storage reels shall be provided:

Qty.	Winding Tubes Per Reel	Length of Winding Tubes
4	3	16 Foot

b. Storage reel frame, winding tubes, castors, brake shafts, cranks and fasteners shall be made of type 304 stainless steel. Each reel shall have six wheels, each of which shall be 6 inches in diameter, be rated at 1150 pounds load capacity and be made of solid polyurethane. Wheels shall be lubricateable through grease fittings on stainless steel axle shafts and have stainless steel swivel yoke assemblies. The reel shall have two frame mounted, screw-type brakes with pads that lock directly to the pool deck and have a total of 18 square inches of total braking surface. Castor brakes or other types of foot-operated or lever-operated brakes will not be considered equal. Each winding tube shall be 4 1/2 inches in diameter; have a wall thickness of .120 inches; and shall consist of continuous length of tubing without joints or welds. Reels with tubes fabricated from two or more pieces of tubing joined together will not be acceptable. End frames shall be fabricated from 1 1/2 inch square Schedule 304 stainless steel box beam tubing with .120" wall thickness. To facilitate field repair, 3/8" stainless steel bolts, nuts and washers shall be used to connect major reel frame parts, wheels, brakes, bearings and winding tubes. Reels that use welding to connect these components will not be considered equal. Winding tube bearings shall be heavy duty, self-aligning, pillow block ball bearings with set screws to secure tube shafts and prevent their lateral

movement. All bearings shall be lubricateable through grease fittings. Plastic surface bearings will not be acceptable.

c. Each storage reel shall be provided with a protective cover constructed of vinyl-laminated polyester cloth, 1000 denier, totaling 13 ounces per square yard.

5. Measuring and Training:
   a. A representative of the manufacturer shall visit pool site to confirm measurements prior to fabrication of cover, and once cover is delivered, train operating personnel and supervise initial installation of cover.
6. Warranty:
   a. Cover panels shall be provided with manufacturer's three- year full replacement warranty covering defects in material and workmanship. Storage reel shall be provided with manufacturer's 10-year warranty covering defects in material and workmanship.

2.5 SWIMMING POOL STRAINER

A. 'MerMade' F.O. series FRP reducing basket strainer: One (1) 12" x 10" standard, with acrylic lid and two (2) stainless steel strainers each (150 lbs.)

2.6 SWIMMING POOL CIRCULATION PUMP

A. 'Paco' #8015-3; 8" x 10" x 15" Type 'KPV' end suction centrifugal pump; 1150 RPM 460V, 3PH; 50HP; rated at 1975 GPM @ 60 Ft. TDH; 90% efficient; premium efficiency TEFC motor; epoxy coat all wet surfaces. 'Paco', 'Aurora' or equal. (2,300 lbs.) Provide smart pump control system variable speed drive model #SPCS050EF4 21" x 41" x 17" deep. Coordinate mounting location to maintain required clearances, 480V 3PH. (177 lbs.)

2.7 HIGH RATE SAND FILTRATION SYSTEM (EKO3 SYSTEMS GEN2, OR APPROVED EQUAL)

The filter system specified herein shall be the standard cataloged product of a company regularly engaged in the manufacture of water treatment equipment. The purpose of this specification is to establish the minimum design, performance, quality, and service standards for the proposed equipment. The equipment shall consist of fiberglass filter vessel(s) with internal distribution and collection system, immediate face piping, operating valves, backwash sightglass valve, air relief systems, gauges, hydraulic pressure supply system, electronic operational control systems, system operating setup/startup and fifteen (15) year non-prorated limited warranty.

Requests for substitutions: refer to Section 131106 SUBSTITUTIONS for requirements. Requests for substitutions must include, but not be limited to:

- List containing contact name and telephone number of ten like systems, each of which shall utilize all specified features and employ fiberglass filament wound vessels, and electronic filter control devices.
- Complete documentation and that proves proposed unit includes all the specified features.
- Manufacturer's sales literature.
- Engineering drawings, structural and seismic calculations prepared by a licensed Civil Engineer.

- Certification listings.
- Installation/operation/maintenance manuals.
- Name and address of the site-local, factory-authorized startup and service representative with affidavit of last date of certification.

Failure to provide this or any other information necessary to confirm that all specified features are provided will be cause for rejection of substitution request.

A. Filter Area and Flow Rate:
   1. The filter system shall be of the pressure type, horizontal in its configuration, suitable for a single grade of filter media, and shall bear the listing mark of the National Sanitation Foundation (NSF) Standard 50 for a maximum flow of 20 gallons per minute per square foot of filter area.
   2. The filter system shall consist of five (5) high-rate permanent media filter tanks, each with 26 square feet of filter area. The system shall have a total effective filter area of 130 square feet. When operating at 16 gallons per minute per square foot of filter area, the filter system will have a capacity of filtering 2080 gallons per minutes.

B. Filter Vessel:
   1. Vessel :
      a. The filter vessel will be 42" inside diameter, will have 26 square feet of filter area and shall be designed for a maximum working pressure of 100 psi with a 5 to 1 safety factor for minimum burst. The design shall be capable of withstanding, without leaks or structural failure, a repetitive pressure test consisting of 250,000 cycles of 0 to 100 psi. This is required to ensure long service life, reduce potential liability and guarantee safe operation.
      b. Each filter tank(s) shall consist of a body and two dished heads manufactured with a dual wall structure consisting of a contact molded inner structure and a filament wound outer structure. The inner structure shall be manufactured with Woven Roving and Chop Strand Mat on a male mold in a two or three-piece design, depending on length, and joined together with secondary joint(s) before applying the outer structure. The outer structure shall be filament wound in both radial and axial geometric patterns to provide maximum strength in all load directions. The dished heads and body thicknesses shall be designed according to ASME Section X requirements confirmed through calculations and a Finite Element Stress Analysis. The outer structure of the tanks shall be seamless and constructed of pigmented resin to provide a professional exterior finish.
      c. The filter tank(s) shall be mounted on two FRP saddle supports that are permanently bonded to the tank through the use of a structural adhesive system. The tank support saddles shall be designed in compliance to all relevant seismic code requirements when anchored to the manufacturer's specifications.
      d. A 16" round flanged manhole, complete with FRP cover, clear acrylic viewing window, combination gasket/ O-ring and bolts shall be located in the dished head of the filter tank(s). All O-ring contact points on the manhole flange and cover shall have a smooth finish to provide a

continuous watertight seal. Manways or manholes located in the side shell of the vessel will not be permitted. Manways or manholes with metal reinforcement will not be allowed, due to inherent weaknesses.

e. A molded 3'' media dump port and separate ¾" water drain complete with a ABS media retainer shall be located on the front side shell of the filter tank(s).

f. A molded ¾" external air relief complete with PVC ball valve shall be located on the top side shell of the filter tank(s).

g. The influent and effluent ports shall be Victaulic grooved to facilitate proper connection of both internal and external piping. The influent/ effluent ports shall consist of Sch. 120 PVC designed according to NSF/ANSI Standard 50 requirements. The ports shall be molded into the top section of the shell and shall be placed in such a manner as to eliminate interference between internal components and the internal port connections. Through flanges fastened to tank side shell by means of mechanical fasteners shall not be acceptable for this application.

h. Following fabrication, the entire vessel shall be cured to ensure uniformity of strength.

i. Each filter vessel shall be subjected to an in-shop hydro pressure test of 100 psi for a period of four (4) hours. Verification of this test and results shall be available to the owners upon request.

2. Distribution and Collection System

a. The filter tank equipment shall include an upper distribution system and lower collection system, hydraulically balanced to prevent filter media migration during filter operation and/ or backwash.

b. The upper distribution system shall include hydraulic diffusers manufactured of injection molded PVC plastic, located in multiple sets of two over the filter bed. They shall be piped to a Schedule 80 PVC distribution header with PVC pipe and fittings appropriately sized to maintain proper flow velocities throughout the entire distribution system.

c. The lower collection system shall consist of a molded ABS header and molded ABS plastic laterals with .009" tapered slots designed to retain a single grade of filter media with a .3 mm particle size. Laterals with a flow velocity not exceeding 6 feet per second at designed filter flow rate shall be utilized. Non-molded laterals will not be considerable acceptable for this application. Collection system hydraulic design calculations shall be available upon request. The internal collection system shall be designed to promote media bed circulation during backwash while providing minimal head loss during filtration.

3. Air Relief System

a. An automatic air bleed system shall be provided. An anti-plug protective shield screen shall be a part of the assembly. A manually operated external air relief shall also be provided for the vessel.

4. Winterizing/Drain and Media Dump Port

a. At the lowest point of the front of the vessel a three-inch (3") port shall be provided. The port shall allow the evacuation of all water from the vessel for the purpose of winterizing or service. No media shall be allowed to

leave the vessel during the draining process. The port shall also facilitate the removal of the filter media from the vessel.

C. Each filter vessel within the system shall be cleaned individually using filtered water provided by adjacent filter vessels. Reverse flow backwash with raw source water will not be allowed.

1. Backwash Valve

a. One (1), two-way, three-port, six-inch (6") backwash valve shall be supplied with each vessel. The valve body shall be injection-molded of ABS plastic all external components will incorporate UV inhibitors. Valves using metal bodies and covers, coated or non-coated, will not be approved. Grooved type fittings shall be provided at each of the valve ports for connection to the filter vessel and manifold piping. Couplers shall be provided at each of the valve ports for connection to the filter vessel and manifold piping. The couplers shall be injection-molded of Isoplast 101LGF40NAT plastic and shall contain UV inhibitor. Each valve shall be fitted with a hydraulic diaphragm designed to operate a sliding flow direction piston. Valve internal shaft, nuts, washers and bolts shall be 316 stainless steel. All stainless-steel components shall be passivated and rinsed after forming and machining.

b. The backwash valve shall be designed to allow for continuous circulation pump operation during the backwash of the filter system that will prevent the loss of circulation pump prime and damage to boiler, chemical feed systems and piping that can result by repetitive on/off cycling of circulation pump. Valves requiring external linkage for synchronization of their operation will not be allowed.

2. Rate of Flow / Priority Valve

a. System shall be provided with either an electrically actuated butterfly priority valve or manual rate of flow valve. A priority valve is required on all two and three tank systems, as well as a four-tank system operating at flow rates below 15 GPM per square feet of filter area. A rate of flow valve is required on all single tank systems, and four or more tank systems.

b. The priority valve shall be an electrically actuated butterfly valve supplied for use on the effluent manifold. The priority valve shall have 150psi operating pressure, one-piece body constructed and NSF 50 listed. External operating linkage valves will not be allowed.

c. The rate of flow valve shall be a manual butterfly valve, 150psi operating pressure, one-piece body constructed and NSF 50 listed ensuring proper system flow rate. The rate of flow valve shall be manually set during system commissioning by a factory trained

technician.

3. Backwash Sightglass Valve

a. A tamperproof, butterfly valve shall be supplied for use on the waste manifold. The valve shall have a 150psi operating pressure, one-piece body constructed, include a flanged connected sightglass piping system to inspect backwash flow and be NSF 50 listed. The sightglass shall be field-adjustable, ensuring proper system backwash flow rate. The backwash rate shall be manually set during system commissioning by a factory trained technician.

4. Piping

a. To minimize floor space requirements and provide unhindered access to filter controls, backwash valves, media dump port, and vessel access openings, all piping shall be located on top of the horizontal filter vessel. All manifolds shall be fabricated from Schedule 80 PVC pipe and fittings. In manifold sections exceeding more than two tank lengths, additional Victaulic couplings will be supplied to join piping sections. Influent and effluent manifolds shall be 10" IPS and the waste manifold shall be 6" IPS. All piping shall be factory assembled and pressure tested.

D. Operational Control:

1. Automatic Backwash Control

a. An automatic backwash control system shall be provided (in conjunction with the automated water chemistry/mechanical room controller (refer to Section 13 11 06 2.12) which shall allow for the automatic and manual manipulation of the filter backwash operation.

b. The backwash control system shall include a Filter Interface Panel manufactured by BECS Technology to be installed on the filter system influent piping manifold. The Filter Interface Panel shall utilize sealed solenoids with 4mm orifice and ½" push fittings.

c. The Filter Interface Panel shall include two (2) four-inch (4") pressure gauges to indicate influent and effluent pressure of the filter. The gauges shall be mounted with the solenoid block on a manufactured PVC backplate.

d. Differential pressure shall be calculated by the automatic backwash control system.

E. Hardware:

1. All fasteners (nuts, bolts, washers) employed in the system shall be cadmium-plated steel.

F. Service Access:

1. Access to manway, backwash valves, and filter control console shall be from the front of the filter system and shall not require disassembly of any piping or climbing over or around vessel, manifolds or valves to perform operation, service or routine maintenance.

G. Filter Media:

1. Filter media depth shall be as indicated on the drawings; measurements will be taken at the site and will be from top of the collection laterals to the top of the media. The media shall be of a single grade, consisting of uniformly graded, angular shaped, crushed silica sand which shall be free of limestone or clay.

2. Filter system manufacturer shall provide a filter media analysis for the media being

   utilized. Contractor shall supply manufacturer's representative with two (2) pounds of filter media from installation site. Consulting engineer, prior to its installation, must approve filter media analysis.

3. Filter Media

   a. #20 Sand:

      1) Filter media shall be Grade #20, effective size .45 millimeter with a uniformity coefficient of 1.5 maximum.

MEDIA ANALYSIS

Sieve No. US Series	MM Opening	Percent Retained On Sieve (By Weight)
20	0.833 (0.333 in)	2
30	0.589 (0.023 in)	58
40	0.417 (0.016 in)	36
50	0.295 (0.012 in)	4

I. Pressure Amplification System

The pressure amplification system systems shall consist of a stainless-steel centrifugal pump, hydro-pneumatic pressure sustaining tank, adjustable pressure switch, 50 feet of 3/8-inch Nylo Seal® tubing and all necessary tubing connectors.

1. Pump

   a. The pump housing shall be made of stainless steel and the impeller shall be molded of Lexan®. A mechanical seal shall be

provided and shall be a precision- lapped, highly- polished, carbon-ceramic stainless-steel shaft seal, ensuring drip-proof protection. The motor shall be a 1/2 HP, single phase, 60 cycle, 3450 RPM, suitable for service with filter control console. The motor shall be a NEMA 'C' face flange mounting with a drip-proof enclosure. The motor shall be equipped with sealed ball bearings. The pump shall be performance rated at 5 gallons per minute at 80 feet of head.

2. Tank

   a. Pressurized water shall be contained in a hydro-pneumatic steel tank that shall be lined with an epoxy coating. The tank will employ a flexing diaphragm, separating wet and dry chambers. The steel tank shall be designed for a maximum working pressure of 100 psi. Tank connection shall be 3/4" NPTM.

3. Pressure Switch

   a. A pressure switch shall be mounted directly to the pump motor and shall be rated for the operation of a 1-1/2 HP motor at 115 volt, single phase. The switch will allow for adjustment of cut-in and cut-out pressure.

4. Check Valve

   a. A half-inch, spring-loaded check valve shall be supplied as part of the assembly. The check valve shall be installed on the pump suction and shall be designed to retain water pressure accumulated within the amplification system.

5. Tubing and Fittings

   a. Fifty (50) feet of 1/2-inch Nylo Seal® tubing and all necessary tubing to pipe fittings shall be supplied for the connection of the HydroForce system to the filter system and the filter control.

6. Finish

   a. The system shall be coated with an industrial-grade polyurethane high-gloss protective finish.

J. Packaging

1. To protect and safeguard filter vessel, it shall be skidded and supplied with a plastic wrapping to facilitate shipment, handling, and/or storage on job site. The plastic wrap shall also act as a protective barrier during installation. All other components shall be packaged in a manner that will ensure damage-free transportation and facilitate storage at job site.

K. Instructions

1. Printed and bound operating, installation and service manual with exploded parts list shall be supplied with the system described herein.

L. Certification

1. Certified/stamped engineering calculations and drawings will be required for the structural strength of filter vessel and seismic loading. The filter supplied must be listed by the National Sanitation Foundation (NSF) ANSI 50 for a flow rate of up to 20 gallons per minute, per square foot of filter area. Proof of National Sanitation Foundation (NSF) listings will be required.

M. Commissioning/Start-Up, Owner Training and Annual Maintenance

1. Local factory representation for the equipment contained herein is mandatory. A site specific, local factory certified, trained and authorized service specialist shall provide system commissioning/start-up to include adjustments to the filter system and all its controlling components, calibration and setup of the control system, and instructions to the owner/operator of the system's workings.

2. Prior to the completion of one (1) years' service, the certified, trained and authorized manufacturer's service specialist shall visit the filter system installation site. With the owner/operator present, the service specialist shall inspect the filter system components for signs of wear/malfunction at that time. Any and all worn or malfunctioning items shall be repaired or replaced at no expense to the owner. The service specialist shall also provide a scope and proposal for continued annual preventative maintenance service should the owner choose to outsource the required annual maintenance required.

N. Warranty

1. A limited manufacturer warranty shall be provided covering all components of the filter system specified herein. Warranty initiates as of the date of system commissioning with the first year as unconditional to be free from defects in material and workmanship. Filter tank shell shall carry a 15-year non-prorated warranty. Filter tank internal components and backwash valves shall carry a three (3) year warranty, face piping shall carry a three (3) year warranty, and all accessories, including but not limited to valving, pressure gauges, air relief assembly and drain assembly shall carry a three (3) year warranty. Owner shall refer to manufacturer warranty document for required warranty claim procedures and/or contact manufacturer's authorized representative.

2.8 POOL HEATER(S)

A. Indirect fired pool heating package system; 'Aquas' Crest SmartTouch control condensing modulating boiler, titanium heat exchanger with CPVC connections, factory assembled skid mounted package, California code controls, 1 ½" natural gas connection, 2" water connections, 8" diameter air inlet and 8" diameter sidewall vent size, PVC vented; 1,500,000 BTU per hour input, 97% efficient. Provide ¾" cold water connection 'Lochinvar APO1500N", weight = 3,097 lbs. each. Three (3) total.

2.9 CHLORINE FEED SYSTEM

A. Provide two (2) 'Chem-Tainer' 500 Gallon #TC5971DC; dual storage/containment tank with lid seismically restrained; (4,165 lbs.). Complies with Fed. Reg. #40CFR-264-163. Feed system(s) shall be 'LMI' #SD43-88P-KSI; 288 GPD @ 15 PSI with FRP shelf bracket. Hard pipe to point of injection. Two (2) total.

2.10 ACID STORAGE/FEED SYSTEM

A. Provide 'Chem-Tainer' 350 Gallon #TC5256DC; dual storage/containment tank with lid seismically restrained; (2915 lbs). Complies with Fed. Reg. #40CFR-264-163. Feed pump shall part of the Carbon Dioxide alkalinity control system. Provide a complete acid vapor recovery system.

2.11 CARBON DIOXIDE STORAGE/FEED SYSTEM

A. Provide one (1) NOVO-750, 750 lb. cryogenic liquid CO2 storage tank with remote fill port. 594 liquid lbs. (5,195 cubic feet of gaseous CO2 at NTP), one (1) total. Provide EKO PH-MTS CO2 high efficiency feed system with alkalinity control, 0 to 160 SCFH capacity booster pump, piping injector, flowmeter, relays and acid feet alkalinity control. One (1) system total. (92 lbs.) Provide hard wired 'Analox' APIKIT CO2 detector with audible and visual arms in each chemical room, UL 1971 standard listed, one (1) total.

2.12 SWIMMING POOL WATER CHEMISTRY CONTROLLER

The equipment room controller package shall be BECS Technology model CS-BECSYS7-BP-E packaged by Eko^3 Systems.

A. General
   1. The integrated equipment room control system shall provide continuous monitoring and control of sanitizers, oxidizers, pH, temperature, system flow rate monitoring, total dissolved solids (TDS), turbidity, chemical inventory levels, surge tank and backwash holding tank water levels, system pressures, and water chemistry balance calculations. The control system shall also provide automatic control of the filtration system including backwash operation. Installation of the system shall be per the manufacturer's specification and no exceptions shall be allowed. A factory trained/authorized representative shall provide system commissioning and training to the owner.

B. Certifications
   1. The controller shall carry the following product certifications:
      a. UL 61010-1
      b. (CSA) C22.2 Number 61010-1
      c. European Union Low Voltage Directive 73/23/EEC EN 61010-1

C. Sensors

   The controller shall include pH, ORP, ppm and temperature sensors meeting the following requirements:
   1. pH sensor

a. The controller shall continuously monitor, display and data log pH with 0.1 or 0.01 resolution (programmable) and provide a measurement of pH by utilizing a sensor with the following characteristics:
   1) 0 – 14 sensing range;
   2) ABS body with ½" NPT process connection;
   3) Minimum of 32 milliliters of inorganic electrolyte gel; organic electrolytes, susceptible to breakdown in the presence of strong oxidants, shall not be considered equal;
   4) A porous Teflon liquid junction to provide a stable, low impedance reference contact, and to prevent fouling and clogging of the liquid junction;
   5) A silver/silver chloride (Ag/AgCl) reference element;
   6) A general purpose glass membrane pH sensing element;
   7) Operating temperature range of 0 - 80 degrees C;
   8) Operating pressure range of 0 - 100 psiG.

2. ORP / HRR sensor
   a. The controller shall continuously monitor, display and data log ORP with 1mV resolution and provide a measurement of ORP by utilizing a sensor with the following characteristics:
      1) -1000 to +1000mV sensing range;
      2) ABS body with ½" NPT process connection;
      3) Minimum of 32 milliliters of inorganic electrolyte gel; organic electrolytes, susceptible to breakdown in the presence of strong oxidants, shall not be considered equal;
      4) A porous Teflon liquid junction to provide a stable, low impedance reference contact, and to prevent fouling and clogging of the liquid junction;
      5) A silver/silver chloride (Ag/AgCl) reference element;
      6) A solid platinum or solid gold ORP sensing element with a minimum of 1 cm2 surface area; platinum-plated and gold-plated sensing elements, which are susceptible to abrasives, shall not be considered equal;
      7) Operating temperature range of 0 - 80 degrees C;
      8) Operating pressure range of 0 - 100 psig.
3. Amperometric (ppm) Sensor
   a. The optional Free Chlorine sensor shall be an amperometric probe system with a measuring range of 0.05 to 20 mg/l with a fully selectable scale and a temperature range of 36°-113° Fahrenheit. The amperometric probe shall come with a PVC body, replaceable PTFE membrane and electrolyte, gold cathode and silver/ silver chloride anode.
4. Temperature Sensor
   a. The controller shall continuously monitor, display and data log temperature with 1°F resolution and provide a measurement of water temperature by utilizing a sensor with the following characteristics:
      1) 32 – 212°F (0 – 100°C) sensing range;
      2) 2 wire, 100Ω resistive temperature detector (RTD) with an 0.00385 Alpha.
5. Flow Sensor

a. The controller shall continuously monitor, display and data log flow rate with 0.1 gpm resolution and shall provide a measurement of pool circulation flow rate and volume by utilizing a flow sensor with the following characteristics:
   1) 0-8800 gpm (0-33265 liter/min) measuring range,
   2) Paddle wheel flow sensor with a frequency output,
   3) Dual O-ring seal,
   4) 25 foot cable,
   5) Iron pipe saddle,
   6) Flow volume: 999 trillion gallons, 1 gallon resolution; 999 trillion liters, 1 liter resolution.

6. 4-20mA Sensor
   a. The controller shall be capable of reading a total of eight (8) 4-20mA output sensors, including the following:
      1) Pressure Transducers (Quantity 2)
         The controller shall continuously monitor, display and data log pressure(s) with 1 psiG resolution and provide measurement of filter influent and/or filter effluent pressure by utilizing pressure transducer(s) with the following characteristics:
         a) 0 to 100 psiG measuring range,
         b) < ± 2% span max @ 25° C which includes linearity, hysteresis and repeatability,
         c) 0.25% static error band and 1.5% typical thermal error band,
         d) Temperature compensated and fully calibrated,
         e) Stainless steel wetted components with plumbing connections of 1/4".
      2) Vacuum Transducer (Quantity 1)
         The controller shall continuously monitor, display and data log vacuum(s) with 1 psiG resolution and provide measurement of strainer vacuum by utilizing a vacuum transducer with the following characteristics:
         a) -15 to +85 psiG measuring range,
         b) < ± 2% span max @ 25° C which includes linearity, hysteresis and repeatability,
         c) 0.25% static error band and 1.5% typical thermal error band,
         d) Temperature compensated and fully calibrated,
         e) Stainless steel wetted components with plumbing connections of 1/4".
      3) Liquid Level Sensors - Three (3) total
         The controller shall provide measurement of liquid levels for surge tanks, backwash holding tanks and/or liquid chemical inventory by utilizing liquid level sensor(s) with the following characteristics:
         a) Field configurable sensing range from 3 ft to 16 ft,
         b) Field calibration for various tank levels, shapes and sizes,
         c) Non-contacting sensing elements enclosed in PVC.
      4) Conductivity/TDS Sensor
         The controller shall continuously monitor, display and data log conductivity/TDS with 1 micromho/ppm resolution and provide a

measurement of conductivity/TDS by utilizing a sensor with the following characteristics:

a) 0-20,000 micromhos (0-10,000 ppm TDS) measuring range
b) A 316 stainless steel electrode,
c) PTFE insulator as well as a dual EPR O-ring seals,
d) AC operation, which resists electrode plating.

D. User Interface

1. Standard Display
   The standard display shall be a backlit transflective LCD with 14 line x 40 alpha/numeric graphical characters that will continuously display information related to the following:
   a. All installed sensor readings,
   b. Set points, with current control status,
   c. All active alarms, including time activated,
   d. Smart menus w/ integrated on-screen help.
2. Contrast adjustment of the backlit LCD shall be provided through clearly marked keys on the front-panel without the need for access to internal controller circuitry. After initial adjustment, controller shall monitor internal temperature and automatically adjust contrast to prevent LCD blackout in extreme ambient temperature conditions. Controllers that do not include front-panel contrast adjustment and automatic temperature compensation shall not be considered equal.
3. The standard user interface shall include single-touch access to Set Points, Relay Modes, Calibrations, Backwash status and settings, Menu access, and Reset Fail/Safes. An alphanumeric keypad shall be provided for ease of system configuration.

E. Control Functions

1. Water Chemistry
   a. pH Control: The controller shall continuously control pH. Chemical feed shall be configurable for feed-up, feed-down, or dual feed and either on/off or time-based proportional feed.
   b. Sanitizer Control: The controller shall continuously control sanitizer based upon the ORP reading, the amperometric sensor, or both with a bracketed control program. Chemical feed shall be configurable for either on/off or time-based proportional feed.
   c. Bracketed Sanitizer Control: With the amperometric ppm sensor, the controller shall be configurable for bracketed sanitizer control; The bracketed control algorithm shall allow either the ORP or ppm setpoint to be chosen as the primary control point, while using other parameter to create a secondary boundary (min and max settings) that must be maintained in addition to the primary control point.
   d. Sanitizer Booster Feed: The controller shall have a sanitizer booster program with selectable ORP and/or ppm set points with separate ending set points, allowing the option of the booster sanitizer to control to a lower set point while the primary system can recovers.
   e. Ozone/UV Control: The controller shall provide feed-up control of an ozone or UV system based upon ORP and/or ppm set points. A Fireman

Cycle feature shall turn off the Ozone/UV relay 0 to 60 minutes (settable) prior to backwash initiation or recirculation pump shutdown. The Ozone/UV control algorithm shall include an Energy Conservation mode, with on/off set time and secondary set point.

f. Superchlorination: The controller shall have a programmable superchlorination function, based ORP or ppm superchlor setpoint, which is triggered manually.

g. Dechlorination: The controller shall have a programmable dechlorination function, based upon ORP or ppm dechlor setpoint, which is triggered either manually or by the completion of the superchlorination function.

h. LSI & RSI: The controller shall compute the Langelier Saturation Index and the Ryznar Saturation Index based upon current inputs and the Ca Hardness and Alkalinity entered by the operator.

i. Flow Monitoring: The controller shall continuously monitor, display, and data log system flow, maintaining a total flow volume. A low flow alarm shall be operator settable, which can be programmed to disable chemical feeds.

j. Heater Control: The controller shall perform on/off control of a heater based upon an operator settable temperature set point. A Fireman Cycle feature shall turn off the heater 0 to 60 minutes (settable) prior to recirculation pump shutdown. Heater control algorithm shall include an Energy Conservation mode, with on/off set time and secondary temperature set point.

k. Chemical Inventory Monitoring: The controller shall continuously monitor, display, and data log liquid pH adjuster and sanitizer inventory levels. The controller shall include low chemical level alarm points for each chemical being monitored.

l. Backwash tank Monitoring: The controller shall continuously monitor, display, and data log backwash holding tank levels.

m. Surge tank Monitoring: The controller shall continuously monitor, display, and data log surge tank levels.

n. Autofill: The controller shall automatically control a water makeup relay to add makeup water to maintain pool level set point, based upon surge tanks (or equivalent) level, with an overfill delay feature. The controller shall provide a programmable alternate set point (4 event 28 day timer). Use in conjunction with 3" valve specified in Section 13157 2.3G

o. Sensor Wash: The controller shall include a programmable sensor wash with start and end time, feed duration, and number of cycle to allow multiple feed cycles per day.

F. Energy Conservation

1. Alternate Setpoints: The controller shall have alternate Sanitizer, Heater, and Autofill setpoints, based upon a 4 event 28 day timer.
2. Energy Conservation Mode: The controller shall have the capability to disable all mechanical and chemical functions during programmed conservation cycle. The Energy Conservation Mode shall include the ability to periodically monitor and satisfy all operation requirements based upon a programmed time schedule.

G. Automatic Backwash

1. Backwash Initiation: The controller shall be user configurable to initiate backwash upon any of the following conditions:
    a. Time, based upon a 24 hour, 7 day programmable calendar,
    b. Pressure Differential, taken from either a pressure differential switch or an operator settable low pressure differential setpoint based upon the differential between two installed pressure transducers,
    c. Low System Flow, an operator settable low flow set point based upon the installed system flow meter,
    d. Totalized filter water volume, an operator settable totalized filter water volume set point based upon the total system flow maintained by the controller from the installed system flow meter,
    e. High filter effluent turbidity, an operator settable turbidity set point based upon the installed turbidity sensor,
    f. Manual, which only initiates backwash when manually activated by operator.
2. Normal Operation: The controller shall be capable of controlling the backwash operation of up to 16 filters, with the following backwash features included as part of normal programming.
    a. Inhibit Period, Operator settable daily time period during which backwash is prevented from being triggered.
    b. Backwash Frequency Fail Safe: Prevents an automatically triggered backwash from starting within this time period from the end of the previous backwash. Does not prevent a Manual initiation of backwash.
    c. Fireman Cycles: The controller shall provide operator settable independent Fireman Cycle settings for the Heater and Ozone/UV controls. The controller shall automatically delay the start of the backwash operation until the Heater and Ozone/UV controls have been deactivated and the corresponding Fireman Cycles have expired.
    d. Primary/Priority Valve Management: Primary/Priority valve control closes a Primary/Priority valve during backwash of a filter to increase the flow through the filter being backwashed.
    e. Alternate Lead Filter, In multiple filter systems, the controller shall automatically alternate the lead filter in each successive backwash cycle, in order to assure an effective full backwash of all filters in the system.
    f. Backwash duration: Operator settable length of time to backwash each filter.
    g. Dwell Time: Operator settable length of time to delay after each filter is backwashed.
3. Backwash Holding Tank Management: The controller shall be capable of monitoring the backwash holding tank to prevent overflow, by adjusting the backwash cycle as follows:
    a. Suspend backwash when the holding tank is full, allowing time for the holding tank to drain.
    b. Automatically resume backwash when the holding tank is empty.
    c. An operator settable timeout which monitors the amount of time the backwash holding tank takes to drain. If this timeout is exceeded, a limit timer alarm is activated and the backwash cycle cancelled.

4. Advanced Backwash Optimization: The controller shall be capable of the following advanced features as part of the normal backwash programming:
    a. Backwash accessory: Turns on an additional relay before, during, and/or after backwash operations based upon operator settable parameters; useful for sites where application of a dechlorination agent to backwash water (holding tank) is required.
    b. Water Saving (Turbidity): The controller shall be capable of monitoring backwash effluent turbidity and ending a filter backwash early upon reaching a desired turbidity set point.
    c. Filter Isolation: During backwash suspension due to full backwash holding tank, allows suspended filter to be isolated from the system rather than being returned to filter mode. This prevents the filter bed from recompacting, making the resumed backwash rapidly effective. Requires properly equipped filters.

H. Main Recirculation Pump
1. On/Off Control with Relay:
2. Controller shall provide the capability to interface to and control a recirculation pump with a programmable relay. The controller shall include the following capabilities, available as appropriate based upon installed sensors and implemented features:
    a. Fireman Switch: The following events shall satisfy Fireman Switch timing requirements prior to turning off recirculation pump:
        1) Backwash Operations
        2) Energy Conservation mode (24 hr, 7 day function)
        3) Manual off
    b. Immediate: The following events immediately turn off recirculation pump, regardless of Fireman Switch timing requirements:
        1) Surge Tank Level Low Alarm: Turn off pump immediately (surge tank is almost empty)
        2) Strainer Vacuum High Alarm: Turn off pump immediately (possible entrapment)
        3) Emergency shutdown, triggered by front-panel Emergency Off: Turn off pump immediately (per Operator)

I. Total Dynamic Head (TDH)
1. Controller shall provide the capability to continuously monitor the Total Dynamic Head (TDH) of the main recirculation pump, directly calculated by the controller from recirculation pump influent vacuum and filter influent pressure transducers. TDH shall be displayed on the user interface and recorded in data logs, with user-programmable High and Low TDH Alarm settings.

J. Control Outputs
1. Relay Outputs - Solid-State Relays:
   The controller shall come with a total of 4 integral line or dry contact 5A solid-state relay outputs capable of switching 3A under all normal operating conditions, accounting for the effects of the temperature gradient inside the NEMA 4X enclosure. Systems that utilize relays that are not de-rated must

submit an engineering evaluation justifying the use of relays at their full, optimal-condition capacity.

2. Mechanical Relays
3. The controller shall come with a total of 3 mechanical relays:
    a. 1 integral 8A dry contact mechanical relay, and
    b. 4 integral 3A dry contact or line powered mechanical relays.
    c. Since mechanical relays have the inherent risk of failing in the closed (active) position, as a safety measure the controller shall preclude the ability to assign any of the integral mechanical relays to chemical feed functions. Systems that do not preclude mechanical relays from being configured for chemical feeds shall not be considered equal.
4. Expansion Relay Outputs
    a. The controller shall be capable of expanding the number of relay outputs available by adding up to 3 expansion modules in any combination.

K. Solid-State Relay Expansion Modules
1. Each Solid-State Relay Expansion Module provides 5 integral 5A solid state dry contact or line powered relays capable of switching 3A under all normal operating conditions. Systems that utilize relays that are not de-rated must submit an engineering evaluation justifying the use of relays at their full, optimal-condition capacity.

L. Mechanical Relay Expansion Modules
1. Each Mechanical Relay Expansion Module provides 5 integral mechanical relays:
    a. 1 integral 8A dry contact mechanical relay, and
    b. 4 integral 3A dry contact or line powered mechanical relays.
    c. Since mechanical relays have the inherent risk of failing in the closed (active) position, as a safety measure the controller shall preclude the ability to assign any of the integral mechanical relays to chemical feed functions. Systems that do not preclude mechanical relays from being configured for chemical feeds shall not be considered equal.

M. Safety Features
1. Manual-On limit
    a. The controller shall have built-in limits to the amount of time any relay control output may be forced on (i.e. in “Manual On” mode). This is an important safety feature to prevent control outputs from inadvertently being left forced on after service or diagnostics.
2. High/Low Alarm Settings & Control Lockouts
    a. The controller shall have programmable high and low alarm settings for pH, ORP, PPM, temperature, low flow & no flow and chemical overfeed, turbidity, pressure & vacuum, surge tank levels, chemical inventory.
    b. The controller shall have a programmable lockout of sanitizer feed upon pH high or low alarm.
3. No Flow Alarm & Flow Restored Delay
    a. The controller shall activate a No Flow alarm when the dedicated sample stream flow switch indicates there is insufficient flow through the sample

stream. This No Flow alarm shall lockout all chemical feed control operations.

b. The controller shall include a Flow Restored Delay, which shall extend the No Flow lockout user-programmable amount of time after the No Flow alarm ends (i.e. flow is restored). This feature is necessary to assure that the system has valid, stable sensor readings of circulating water prior to making chemical feed control decisions.

c. Feed Limit Alarms

d. The controller shall trigger a Failsafe alarm if a chemical feed relay remains on longer than the programmable Feed Limit Timer. Chemical feeds shall automatically be disabled if the corresponding reading goes into a Failsafe alarm condition.

4. Emergency Off

a. The controller shall have a dedicated Emergency Off button on the front panel of the system, which immediately halts all chemical feeds and control outputs when pressed. This feature shall be password protectable, which shall require entry of one of the Security passwords.

5. Safety Shield

a. The controller shall include a safety shield or other mechanism for allowing fuse replacement without access to high voltage circuitry or wiring.

N. Security

1. The controller shall have three security password levels: six for operators, two for managers and one for the distributor providing for a history of access identified by the user.

O. Data Logging

1. The controller shall have 512K battery backed-up RAM for input level recording and events. All input level shall be recorded for 10 to 56 days depending on sample rate (2to 10 minutes).

2. The controller shall record and maintain the latest 1100 events over a maximum of 14 days recording all alarms, parameter changes, user logins, and operational cycles related to all control features

P. Local Alarms / Indicators

1. The controller shall signal all alarm conditions with the following indicators:

a. A bright red flashing LED on the front of the controller,

b. Activation of a master alarm signal provided as a dry contact relay enabling the use of 0-240 VAC alarms, and each active alarm listed on the LCD display along with time activated.

Q. Remote Communication, Access and Alarm Notification

1. Ethernet

a. The controller shall come with a standard, integral 100BaseT Ethernet connection. The controller shall be capable of providing Remote Access via PC with Ethernet connection and Alarm Notification via email or text message via an Ethernet connection to the Internet.

R. Enclosure

1. The controller shall be housed in a NEMA 4X polycarbonate enclosure.

S. Flow Cell
   1. PVC flow cell
      a. The flowcell shall have a PVC body with two ½“ NPT ports for pH and ORP sensors, two ¼“NPT ports for temperature sensor and sensor wash acid injection, and a clear acrylic front viewing window. The flowcell design shall provide precise sample flow rate and water velocity regulation past the probes. The flowcell shall come provided with PVC ½” isolation ball valves, PVC ¼” wet test valve and standard reed or optional rotary flow switch.
      b. Each flowcell shall be equipped with a pressure-sensing device. The pressure sensor shall consist of a compound pressure/vacuum gauge manufactured in stainless steel, 2 ½” diameter, liquid filled with an operating pressure range of 0 to 60 psig and vacuum of 0 to –30 in./ Hg.

T. Packaged System Enclosure
   1. The equipment room controller and flowcell with sensors shall be mounted onto a 3/8” thick PVC backplate. The flowcell shall be completely assembled and reading for integration into the plumbing.

U. AC Surge Suppression
   1. An integrated solid state devise shall be furnished to protect each mechanical room control system from excessive line voltage at controller.
   2. Device shall be housed in a tamper proof enclosure provided with mounting tabs and have ½” NPT hardwire connection, with LED indicator light, UL listed.

V. Commissioning / Start-Up, Warranty and Manuals
   1. Controller and sensing probes (ORP, pH, ppm) shall be covered by a standard manufacturer’s 5 year warranty. Manufacturer’s representative shall provide a complete set of new probes on the fifth year of operation.
   2. The control system shall be provided with on-site start-up, on-site operator training, and 2 years on-site warranty service performed by a factory trained and certified representative of the controller manufacturer.
   3. Manufacturer’s representative shall supply an Operator’s Manual describing system features and operating instructions.

2.13 SWIMMING POOL COOLING SYSTEM

A. ‘Glacier’ Pool Cooler model ‘GPC-280’; two (2) total. 237 GPM flowrate, 4” influent/effluent piping, 1” drain to floor sink, 208-230/460V 2 HP fan; 110/220V ½ HP sump pump draining to surge chamber, 1,588 lbs. operational weight. 86” diameter x 79” tall.

B. Cooling System Booster Pump: ‘Pentair’ ‘EQ-Series’ model 340029; EQWK-500; 208-230/460V; 5 HP rated at 574 GPM @ 27 ft. TDH, with 6” x 4” piping connections and strainer/basket. One (1) total.

PART 3 - EXECUTION

3.1 SURFACE CONDITIONS

A. Inspection:

1. Prior to installing the items of this Section, carefully inspect the installed Work of other trades and verify that all such Work is complete to the point where this installation may properly commence.
2. Verify that the swimming pool equipment items may be installed in strict accordance with original design, pertinent codes and regulations, and the manufacturers' recommendations.

B. Discrepancies:
1. In the event of discrepancy, immediately notify the Owner's Representative's Representative.
2. Do not proceed with installation in areas of discrepancy until all such discrepancies are fully resolved.
3. Failure to notify the Owner's Representative's Representative and give written notice of discrepancies shall constitute acceptance by the Installer of existing conditions as fit and proper to receive its Work.

3.2 INSTALLATION

A. Supply and install items of swimming pool equipment in strict accordance with applicable codes and regulations, the original design, and the manufacturer's published recommendations, anchoring firmly and securely for long life under hard use.

B. Coordinate with other trades to insure all imbedded items are set plumb and flush. Railing ends must have anchor sockets and escutcheon plates. Be certain that deck equipment and railings are properly bonded prior to imbedding.

C. All equipment shall be braced and/or anchored to resist a horizontal force acting in any direction using the criteria shown on the Drawings.

3.3 INSTRUCTION

A. The Contractor shall provide a factory certified representative(s) to start-up and certify proper installation, operation and full warranty status of all swimming pool mechanical equipment. The Contractor shall provide not less than two 8-hour days of on-site training for facility staff in the operation and maintenance of the swimming pool mechanical equipment and systems. The two 8-hour days shall be separated by a minimum of seven calendar days and be completed within the 14-day start-up period.

3.4 EQUIPMENT ACTIVATION

A. All water chemistry and filtration mechanical equipment shall be operational upon filling of pool after plaster. Chemicals and other related support items as supplied by Contractor, shall be in supply at start-up.

B. For the first fourteen (14) calendar days after completion of the pool plaster, brush all plastered surfaces at least twice a day and coordinate with General Contractor to ensure that the plaster is carefully maintained after the initial fourteen day period. In addition, coordinate with the Contractor to ensure that pool filtration equipment is continuously running during the initial fourteen day period.

C. Start-up and provide qualified personnel to operate pool equipment for a period not less than fourteen (14) days after the pool is placed in operation, or until the Owner takes occupancy of the facility or letter of substantial completion. During this time,

Contractor shall instruct and supervise the Owner's personnel in the various operating and maintenance techniques involved. Contractor shall be responsible for supply of chemicals during this not less than fourteen (14) day period and at time of turnover to Owner, chemical storage tanks shall be full. (Owner's personnel shall be fully trained and capable of assuming swimming pool maintenance tasks, training may begin before Owner takes occupancy).

3.5 CLEAN-UP

A. Upon completion of swimming pool equipment, remove all debris, materials and equipment occasioned by this Work to the approval of the Owner’s Representative.

END OF SECTION 131106

SECTION 131107 - SWIMMING POOL MECHANICAL

PART 1 - GENERAL

1.1 WORK INCLUDED

A. Swimming pool mechanical piping as indicated on the Drawings for circulation and filtration systems, pool water heating systems, chemical control systems, booster pump systems and appurtenances.

B. Domestic water system from points of connection within swimming pool mechanical equipment room to make-up water system.

C. Filter backwash piping to point of connection with backwash retention pit as required.

1.2 QUALITY ASSURANCE

A. Qualifications of Workers:
   1. The entity performing the work of this Section shall have been successfully engaged in the respective trade for at least five (5) years immediately prior to commencement of the Work.
   2. For actual construction operations, use only trained and experienced workers with a minimum of three (3) years experience with the materials and methods specified.
   3. Provide at least one person who shall be present at all times during execution of the work of this Section, with a minimum of five (5) years experience with the type of materials being installed, the referenced standards, and who shall direct all Work performed under this Section.

B. Standards:
   1. All equipment supplied or work performed shall comply with Chapter 31B of California Building Code, latest edition.
   2. Work shall be performed in accordance with the applicable editions of all National, State and local codes, laws, regulations and ordinances, including the following:
      a. American National Standards Institute (ANSI).
      b. American Society for Testing Materials (ASTM).
      c. American Waterworks Association (AWWA).
      d. American Welding Society (AWS).
   3. Do not construe anything in the Drawings or Specifications to permit Work not conforming to these requirements.

1.3 SUBMITTALS AND SUBSTITUTIONS

A. Provide submittals in conformance with the requirements of Section 013300.

B. Required submittals include:
   1. Pipe and Fittings as specified in Article 2.2 of this Section.
   2. Valves as specified in Article 2.3 of this Section.
   3. Pressure / Vacuum Gauges as specified in Article 2.4 of this Section.
   4. Pipe Hangers and Supports as specified in Article 2.5 of this Section.

5. Sleeves and Waterstops as specified in Article 2.6 of this Section.

C. Submit proof of qualifications as specified in Article 1.3.A of this Section.

1.4 PRODUCT HANDLING

A. Delivery: Deliver all materials to the Project Site in the manufacturer's original unopened containers with all labels intact and legible.

B. Storage: Store all materials under cover in a manner to prevent damage and contamination, and store only the specified materials at the Project site.

C. Protection: Use all means necessary to protect swimming pool mechanical items before, during and after installation and to protect the installed Work specified in other Sections.

D. Replacements: In the event of damage, immediately make all repairs and replacements necessary to the approval of the Owner's Representative and at no additional cost to the Owner.

1.5 JOB CONDITIONS

A. Cooperate with entities performing Work specified in other Sections to so that no conflict of new construction or occupied space may occur. Should any installation Work be done without such craft coordination, that Work so installed shall be removed and re-installed.

PART 2 - PRODUCTS

2.1 PRODUCT QUALITY

A. Materials and equipment shall be new, of the best quality for the purpose intended, and shall be clearly marked with the manufacturer's name and nameplate data or stamp and rating. As far as practicable, materials and equipment shall be of one manufacturer.

2.2 PIPE AND FITTINGS

A. PVC Schedule 40: Type 1, normal impact, NSF approved for solvent welding applications, ASTM Specification D-1785, color shall be white. Dura, Lasco, or approved equal.

B. PVC Schedule 80: Type 1, normal impact, NSF approved for solvent welding applications, ASTM Specification D-1785, color shall be gray. Dura, Lasco, or approved equal.

C. CPVC Schedule 80 Influent/Effluent Piping: Type 1, normal impact, NSF approved for solvent welding applications, ASTM Specification D-1785, color shall be gray. Dura, Lasco, or approved equal.

D. PVC DR25: Conforming to ASTM D-1784, use with epoxy coated bell and spigot-type fittings or epoxy coated mechanical joint by flange adapters with epoxy coated cast iron fittings as specified in Article 2.02 (F), below. Johns-Manville "Big Blue", Diamond Plastics, or approved equal.

E. Copper Tubing: ASTM Specification B-88, hard drawn, with ANSI Standard B16.22 wrot copper fittings.

F. Steel: ASTM Specification A-120, Schedule 40 black or galvanized pipe with ASTM A-47 150 lb. banded malleable iron threaded fittings.

G. Cast Iron: ASTM Specification B16.1, cast iron flanged fittings, provide epoxy coating as required for use with chlorinated water.

2.3 VALVES

A. Ball Valves:
1. For pool system: True-Union design, PTFE seat material with FPM or FKM Double O-ring stem seals, locking handle, NSF certified. PVC schedule 80 body for below grade installation. PVC Schedule 80 body for above grade installation. Furnish ball valves on all pipe diameters 2½" or less with a rating of at least 200psi at 73°F. Asahi, Ipex, or Nibco.
2. For copper pipe system: 3-piece full-port Bronze body valve with Teflon seat, 'Apollo', 'Nibco' or approved equal.

B. Butterfly Valves:
1. Epoxy coated cast or ductile iron body, 316 stainless steel disc and stem, viton seat material, furnish hand wheel/gear operators on all valves 8" and larger. DeZurick, Keystone, Ipex or equal.
2. PVC body, PVC disc and EPDM construction suitable for chlorinated water applications. Stem shall be of 316 stainless steel and non-wetted. Valves shall be self-gasketed design with a convex sealing arrangement. Valves 1-1/2" – 10" shall be rated to 150 psi and 12" valves shall be rated to 100 psi at 70°F. Asahi Pool-Pro, no known equal.

C. Check Valves: Wafer-type, epoxy coated cast or ductile iron body, 316 stainless steel plates and shaft, viton seat material. Centerline, Metraflex, or approved equal.

D. Surge Chamber Float Valve: EPD #2-0020-231 Float Control Valve, 12" line size, as manufactured by Environmental Products Division of Doughboy Recreational, Rancho Cucamonga, CA, no known equal.

E. Surge Chamber Isolation Valve: Butterfly valve, tapped lug style, bronze body, stainless steel stem, bronze disc, phenolic back-up ring, EPT seat material. Provide stainless steel shaft extension, shaft housing and tool operator located 2'-0" above floor level with deck access grate as required. DeZurick, Keystone, Asahi, Spears, or Ipex or approved equal.

F. RP Backflow Preventer: Febco #835-B for 2" and smaller; #825 for 2-1/2" and larger. Febco, Watts, or approved equal.

G. Make-up Water Control: 3" 'Cla-Val' fill system to include 3" 'Cla-Val' solenoid control valve #136-01BY, 3" ductile iron, epoxy coated body with cast iron disc retainer and diaphragm washer, bronze trim, flanged globe pattern, 120V at 60 Hz. Solenoid wiring shall be wired to water chemistry controller. Provide 6" air gap at fill point.

2.4 PRESSURE / VACUUM GAUGES

A. Furnish and install pressure and vacuum gauges on the discharge and suction sides of all pumps. 2" or 2 ½" dial, bottom connection, chrome ring, shut-off cock and snubber. Ranges shall be selected to indicate between mid-point and two-thirds of maximum range under design conditions. Marsh, Trerice, or approved equal.

2.5 PIPE HANGERS AND SUPPORTS

A. General:
   1. The requirements of this Section relates to various requirements of the Agreement, General and Supplementary Conditions, Specifications, Drawings, and modifying documents which are part of the Construction Contract. Responsibility for coordination of all such applicable requirements will be that of the Contractor.

B. Description:
   1. This section provides guidelines and limitations for the support of all mechanical, electrical, plumbing or architectural items from the building structure, and for the seismic bracing of such items.
   2. Design and install all support and bracing systems as required for the swimming pool systems. Provide for attachment to portions of the building structure capable of bearing the loads imposed. Design these systems to not overstress the building structure.

C. Quality Assurance:
   1. Design and install all support systems to comply with the requirements of the California Building Code, Chapter 16A.
   2. Seismic bracing is to be designed by a professional engineer licensed in the State of California.
   3. For the seismic bracing of mechanical, electrical and plumbing system, refer to "Guidelines for Seismic Restraints of Mechanical Systems and Plumbing Piping Systems" by Sheet Metal and Air conditioning Contractors National Association, Inc., (SMACNA) for guidelines.

D. Submittals:
   1. Submit shop drawings for all substructures and attachment methods.
   2. Submit proposed alternative methods of attachment for review and approval by the Architects, prior to deviating from the requirements given below.
   3. For all pipe hangers and support systems, submit structural calculations and details which include all resultant forces applied to the building structure and are prepared and signed by the Contractor's licensed California professional engineer. Calculations will be reviewed for compliance with design criteria, not for arithmetic.

E. Materials:
   1. Use Kin-Line, Grinnel, or approved equal.
   2. Support all pipelines individually with hangers, each branch having at least one hanger. Lateral brace as noted and required.
   3. Support piping near floor with steel stanchions welded to end plates secured to pipe and floor.

4. Support vertical piping at each floor level. Install coupling in piping at each support. Coupling shall rest on and transmit load to support. Isolate copper from steel supports with vinyl electrician's tape around pipe and coupling.
5. Use Stoneman "Trisolator," Unistrut, or approved equal, isolators at each hanger and other support points on bare copper tubing system.
6. For PVC pipe, space hangers four (4) feet apart for pipe sizes 1" and under, five (5) feet apart for pipe sizes 1-1/4" to 2", and six (6) feet apart for pipe sizes over 2". Space hangers for horizontal pipes at a maximum of six (6) feet for copper 2" and smaller and for steel 1-1/4" and smaller; ten (10) feet for copper 2-1/2" and larger and for steel 1-1/2" and larger.
7. Size hanger rods, screws, bolts, nuts, etc., according to manufacturer's sizing charts.
8. Trapeze hangers may be used for parallel lines.
9. Use galvanized or cadmium plated hangers, attachments, rods, nuts, bolts, and other accessories in pool mechanical room, high humidity areas, or where exposed to weather. Hot dip galvanize all items which are not factory furnished. Plating for hinged movements must be done at the factory.
10. Lateral Bracing: To prevent swaying of the piping systems, provide angle iron bracing and anchor into wall or overhead framing. Piping shall be braced or anchored in such a way as to resist a horizontal force of 50% of its operating weight in any direction.
11. Do not use wire or other makeshift devices for hangers.
12. Furnish all substructures and fasteners required to comply with the limitations given below. Use material as specified in the various sections and as appropriate to their use.
13. Install stainless steel or FRP Unistrut, pipe clamps/hangers, supports/bracing with stainless steel hardware in the chemical storage rooms, surge/balance tanks, or any other corrosive environment.

F. Guidelines & Limitations:
1. Each Contractor will coordinate the load requirements from all subcontractors so that no combination of loads overstresses the building structure or exceed the limitations given below.
2. Concrete Structure:
    a. Support all loads hung from concrete structure with cast-in-place inserts, unless drilled-in anchors are specifically approved in writing prior to placing the concrete.
    b. Concrete anchors must not penetrate into reinforcing bars. Where the anchors boring indicates the presence of reinforcing bar, patch hole with an epoxy type grout and relocate anchor 12 diameters away.
    c. Individual expansion anchors cannot support any loads greater than 300 pounds or manufacturer’s specified load capacity without approval.
3. Steel Structure:
    a. Hang no more than 20 pounds per metal deck rib in any span.
    b. At beams, hang all beam loads greater than 40 pounds concentric to beam, not off the flanges.
    c. Attached no loads to the beams or girders greater than the following without specific approval from the architect;

1) Roof beams and girders: 300 pound point load or 600 pound total load for a single span.

G. Seismic Bracing:
1. Design and install seismic bracing to not ground out vibration and sound isolation systems.
2. All items of mechanical and electrical equipment 60” or more in height are to be seismically braced whether such bracing is shown or not.

2.6 SLEEVES AND WATERSTOPS

A. Provide sleeves where work of this Section passes through fire rated partitions, floors and ceilings, concrete slabs or exterior of structure. Caulk clearance space using sealant appropriate for application in conformance with manufacturer's recommendations and Title 24 of California Code of Regulations. 3m, Dow Corning, or approved equal. In lieu of sleeves and caulking, "Link Seal" products may be used.

B. Provide prefabricated waterstops as indicated on the Drawings at all pipe penetrations through structures containing stored water (i.e., swimming pools, balance/surge tanks, etc.) to insure leak-proof seals.

PART 3 - EXECUTION

3.1 SURFACE CONDITIONS

A. Inspection:
1. Prior to Work of this Section, carefully inspect the installed Work of other trades and verify that such work is complete to the point where this installation may properly commence.
2. Verify that items of this Section may be installed in accordance with the original design and referenced standards.

B. Discrepancies:
1. In the event of discrepancy, immediately notify the Owner’s Representative.
2. Do not proceed with installation in areas of discrepancy until all such discrepancies have been fully resolved.
3. Failure to notify the Owner’s Representative and give written notice of discrepancies shall constitute acceptance by the Contractor of existing conditions as fit and proper to receive his work.

3.2 ABBREVIATIONS AND SYMBOLS

A. Abbreviations and symbols on the Drawings are those most commonly used. Obtain clarification from the Owner’s Representative on any questionable items before bid.

3.3 GENERAL PIPING REQUIREMENTS

A. Size any section of pipe for which size is not indicated or any intermediate section erroneously shown undersized the same size as the largest pipe connecting to it. Sizes listed are nominal.

B. Cut pipe accurately to job measurements and install without springing or forcing, true to line and grade, generally square with building and/or structures and adequately supported to prevent undue stress on pipe, fittings and accessories.

C. Make changes of direction with manufactured fittings. Street ells, bushings, reducing flanges, close nipples or bending of pipe is not allowed.

D. Use great care to install piping in accordance with best practice. Plastic pipe shall be "snaked" in trenches to allow for thermal expansion.

E. All above grade, below grade and buried or imbedded PVC shall be installed using solvent weld fittings. Also, each and every fitting and pipe end shall be prepared with solvent primer. Fittings shall be joined individually and with enough time between assembly of adjacent joints to allow them to seal solidly. After joining, an even ring of primer must be visible around the entire fitting. If any fittings are installed without visible primer, the fitting shall be removed and discarded and piping recut, rechamfered and joint made up again using a new fitting. All procedures, methods and techniques used to make up solvent weld joints shall be in strict accordance with manufacturer's recommendations.

F. Arrange pipe and hangers to allow for expansion, contraction and structural settlement. No pipe shall contact structure except penetrations as shown on the Drawings.

G. Provide dielectric connections between copper and dissimilar metals. In copper systems, threaded piping Including connections to equipment shall be brass pipe and fittings. Install dielectric connections in vertical sections of piping only.

H. Run pipe full size through shut-off valves, balancing valves, etc. Change pipe size within three (3) pipe diameters of final connection to control valves, fixtures and other equipment.

I. Provide unions or flanges at connections to equipment, on service side of valves and elsewhere as required to facilitate ease of maintenance.

J. Locate equipment shut-off valves as close to equipment as possible maintaining easy valve access.

K. Make all connections between domestic water systems and equipment or face piping with approved backflow prevention devices as required.

L. All PVC pipe exposed to direct sunlight shall be painted with two coats of Exterior Acrylic Semi-gloss Paint, Sherwin Williams or equal. Color to be selected by the Architect. Prior to painting the PVC pipes, the exterior of all PVC pipes shall be wiped with Methyl Ethyl Ketone, or an approved equal, to remove the glaze from the pipes.

M. The Main Drain pipe must run either level or uphill from the main drain sump, through the surge pit (if applicable) and then to the circulation pump.

3.4 TRENCH EXCAVATION AND BACKFILL

A. Excavation:

1. Excavate and backfill trenches as required for the Work of this Section. Conform to requirements of Section 131101.

2. The Contractor shall perform all excavation of every description and of whatever materials encountered, to the depths indicated on the Drawings or as necessary. The Contractor shall dispose of the excavated materials not required or suitable for backfill as directed, and shall perform such grading as may be necessary to prevent surface water from flowing into the trenches. The Contractor shall provide adequate equipment for the removal of storm or subsurface waters, which may accumulate in the excavated areas.

B. Trenching:
1. Excavate trenches to lines and grades as indicated on the Drawings and with banks as nearly vertical as practicable.
2. Bottoms of trenches shall be accurately graded to provide uniform bearing on undisturbed soil for the entire length of each section of pipe.
3. The width of the trench at and below the top of the pipe shall be such that the clear space between the barrel of the pipe and the trench wall shall not exceed 8" on either side of the pipe. The width of trench above the top of pipe may be wider if necessary.
4. Over-depth excavations shall be filled with tamped sand to required grades.
5. Excavations of five (5) feet or more in depth shall be shored or supported in conformance with rules, and regulations of State and Federal Governments. Shoring shall be constructed, maintained and removed in a manner to prevent caving of the excavation walls or other load on the pipe.

C. Backfilling:
1. Material for backfilling of pipes shall be approved granular material less than two (2) inches in diameter obtained from the excavation. No material of a perishable, spongy or otherwise unsuitable nature shall be used as backfill.
2. Backfilling of pipe trenches shall commence immediately after installation and testing to preclude damage to the installed pipe. Backfill around pipe shall be carefully placed so as not to displace or damage the pipe, and shall be carried up symmetrically on each side of the pipe to one foot above the top of the pipe. The material shall be carefully compacted or consolidated before additional backfill is placed.
3. Backfill above an elevation of one foot above the top of pipe in conformance with requirements of Section 13 11 01. Material for balance of backfill shall be approved granular material less than six (6) inches in diameter taken from the excavation.
4. Unless otherwise indicated on the Drawings, all pipe shall have a minimum of eighteen (18) inches of cover.

3.5 GENERAL EQUIPMENT REQUIREMENTS

A. Position equipment to result in good appearance and easy access to all components for maintenance and repairs.

B. Install piping, flues, breeching and ducts so that they do not interfere with equipment access.

C. Install level, secure and out of moisture. Provide shims, anchors, support straps, angles, grouted bases, or other items as required to accomplish proper installation.

D. All screws, nuts, bolts and washers shall be galvanized, cadmium plated or stainless steel. After fabrication, hot-dip galvanize unfinished ferrous items for outdoor, below grade or other use subject to moisture.

E. Extend 1/2" Schedule 40 black steel pipe lubrication tubes from all hard to reach locations to front of equipment or to access points. Terminate with proper type of lubrication fitting.

3.6 VALVES AND STRAINERS

A. If no shut-off is indicated, provide ball valves at inlet connections and balance valves at outlet connections to fixtures and equipment. Provide proper valve trim for service intended.

B. Use no solder end valves unless noted otherwise; provide adapters in copper tubing systems.

C. Locate valves with stems above horizontal plane of pipe. In general, locate valves within six (6) feet of floor, out from under equipment, in accessible locations with adequate clearance around hand wheels or levers for easy operation.

D. Provide all valves, cocks and strainers, full pipe size unless indicated otherwise.

E. Provide hand wheel operators on all valves 6" and larger, under 6" lever operators may be used.

F. Provide tool operated valve with stainless steel shaft extension and 'on deck' tool operation for surge chamber butterfly isolation valve.

3.7 IDENTIFICATION OF PIPING

A. Identify each valve by a numbered brass tag with hole and brass chain mounted on valve stem or handle. Tag to be a minimum of 1" in diameter and numbers at least 1/4" high stamped into tag. Valves and plumbing lines shall be labeled clearly with the source or destination descriptions.

B. Install an identification chart in a plastic or glass framed enclosure, which schematically illustrates the proper operation of all piping systems and indicates number and location of all valves and control devices within the system.

C. The direction of flow for the recirculation equipment shall be labeled clearly with directional symbols such as arrows on all piping in the equipment area. Where the recirculation equipment for more than one pool is located on site, the equipment shall be marked as to which pool the equipment serves.

3.8 TESTS

A. Perform tests in presence of Owner's Representative with no pressure loss or noticeable leaks.

B. Do not include valves and equipment in tests. Include connection to previously tested sections if systems are tested in sections.

C. Perform tests as follows:

System	Test	Test	Duration

	Pressure	Medium	
Skimmer Lines and Lawson Main Drain Sump Lines	20psig	Water*	4 hours
Pool Piping	50 psig	Water*	4 hours
Pool Main Drains	30 psig	Water*	4 hours
Domestic Water	150 psig	Water*	4 hours

*Never test PVC pipe or fittings with air or other gases, always use water.

3.9 PIPE MATERIAL APPLICATION

A. PVC Schedule 40: Below grade swimming pool piping and domestic water piping up to 12" line size; use standard solvent weld fittings.

B. PVC Schedule 80: Above grade swimming pool piping up to 12" line size; use solvent weld Schedule 80 or epoxy coated cast iron fittings.

C. Type L Hard Copper: Above grade domestic water piping.

D. CPVC Schedule 80; Pool Heater Piping.

E. Schedule 40 Steel: Natural gas piping.

3.10 CUTTING AND DRILLING

A. Cutting or drilling necessary for installation of Work of this Section shall be done only with approval of Owner's Representative.

3.11 CLOSING-IN OF UNINSPECTED WORK

A. Do not cover or enclose Work before testing and inspection. Re-open Work prematurely closed and restore all Work damaged.

3.12 QUIETNESS

A. Quietness is a requirement. Eliminate noise, other than that caused by specified equipment operating at optimum conditions, as directed by Owner's Representative.

3.13 FLUSHING OF LINES

A. Flush or blow out pipes free from foreign substances before installing valves, stops or making final connections. Clean piping systems of dirt and dust prior to initial start-up.

B. Just prior to plastering the pool, under the observations of the IOR, the pool mechanical system shall be flushed using the pool circulation pump. Circulate water through the mechanical system until the effluent water from the pool return heads runs clean.

3.14 CLEAN-UP

A. After all Work has been tested and approved, the Swimming Pool Subcontractor shall thoroughly clean all parts of the equipment installations, including all pool pipe and fittings in the pool mechanical room. Exposed parts shall be cleaned of cement, plaster and other materials and all grease and oil spots removed with solvent.

B. The Swimming Pool Subcontractor shall remove debris from the Project site. Cartons, boxes, packing crates and excess materials not used, occasioned by this work shall be disposed of to the satisfaction of the Owner's Representative.

C. If the above requirements of clean up are not performed to the satisfaction of the Owner's Representative, the Owner reserves the right to order the work done, the cost of which shall be borne by the Swimming Pool Subcontractor.

END OF SECTION 131107

SECTION 131108 - SWIMMING POOL ELECTRICAL

PART 1 - GENERAL

1.1 WORK INCLUDED

A. Provide labor, materials and equipment as required to install the swimming pool electrical system including but not limited to:
   1. A complete and operable system of service equipment, switchboards, panelboards, conduits, switches, time clocks and wiring for power and lighting, motor control centers.
   2. Junction and/or pull boxes, conduits, disconnects, starters, contactors, wiring and connection of all motors and mechanical equipment, including connection and wiring of line voltage controls associated with the mechanical systems.
   3. Swimming pool underwater lighting systems.
   4. Swimming pool timing system.
   5. Complete grounding system as required and shown on the Drawings.
   6. Complete equipotential bonding system as required and shown on the Drawings.
   7. Adjusting and preliminary operation of the completed electrical system as described in Article 3.6, A of this Section.
   8. Cleaning of all completed Work and installation adjustment of all trim and decorative items.

1.2 QUALITY ASSURANCE

A. Qualifications of Workers:
   1. The entity performing the work of this Section shall have been successfully engaged in the respective trade for at least five (5) years immediately prior to commencement of the Work.
   2. For actual construction operations, use only trained and experienced workers with a minimum of three (3) years experience with the materials and methods specified.
   3. Provide at least one person who shall be present at all times during execution of the work of this Section, with a minimum of five (5) years experience with the type of materials being installed, the referenced standards, and who shall direct all Work performed under this Section.

B. Ordinances and Codes: Materials and construction shall conform with all applicable code requirements, including:
   1. California Electrical Code, 2019 edition; Electrical Safety Orders of the State of California; Department of Industrial Relations; regulations of the State Fire Marshal; rules and regulations of the Board of Underwriters of the Pacific, UL 50, 50E and NEMA 250 rating.
   2. Chapter 31 of California Building Code, latest edition.

C. Verification of Conditions:
   1. The locations shown on the Drawings are diagrammatic only and the exact finish location of equipment and materials cannot be indicated. Therefore, locations of all Work and equipment shall be verified to avoid interferences, preserve head room and keep openings and passageways clear. Changes shall be made in

locations of equipment and materials which may be necessary to accomplish these purposes.

D. Preliminary Operations and Testing:
   1. Motor driven equipment shall be tested for correct rotation and completion of all connections.

1.3 SUBMITTALS AND SUBSTITUTIONS

A. Provide submittals in conformance with the requirements of Section 013300.

B. Required submittals include:
   1. Conduit and Fittings as specified in Article 2.2 of this Section.
   2. Panelboards as specified in Article 2.6 of this Section.
   3. Circuit Breakers as specified in Article 2.7 of this Section.
   4. Motor Starters as specified in Article 2.10 and 2.11 of this Section.
   5. Fuses as specified in Article 2.13 of this Section.
   6. Time Clocks as specified in Article 2.14 of this Section.
   7. Ground Fault Circuit Interrupters as specified in Article 2.15 of this Section.
   8. NEC required corrosion resistant enclosures, cabinets and boxes as specified in Article 2.8, 2.11, 2.16 & 218 of this Section

C. Submit proof of qualifications as specified in Article 1.2.A of this Section.

1.4 PRODUCT HANDLING

A. Delivery: Deliver all materials to the Project Site in the manufacturer's original unopened containers with all labels intact and legible.

B. Storage: Store all materials under cover in a manner to prevent damage and contamination, and store only the specified materials at the Project site.

C. Protection: Use all means necessary to protect swimming pool electrical materials before, during, and after installation and to protect the installed Work specified in other Sections.

PART 2 - PRODUCTS

2.1 MATERIALS, GENERAL

A. Materials shall be new, in unbroken packages and bear the U.L. label of approval.

B. Equipment of one type shall be by same manufacturer. One type of equipment for classifications such as:
   1. Switchboards, panels, buss duct, disconnect switches and allied items.
   2. Conduit.
   3. Wire.
   4. Conduit fittings.
   5. Fixtures of the same general type.
   6. Wiring devices.

2.2 CONDUIT AND FITTINGS

A. Conduit within or under buildings or where exposed outdoors shall be rigid metal threaded, hot dipped, galvanized, or U.L. approved plastic except where noted

otherwise on the Drawings. Metallic conduit shall be of the same metal between outlets or terminals.

B. Use flexible metallic conduit only for short connections of motors and where specifically called for on Drawings. Maximum length shall be 40". Use only liquid tight flexible metal conduit. Install an unbroken #12 AWG insulated copper grounding conductor in each liquid tight flexible conduit with permanent connection at motor junction box and service panel ground.

C. Protect, before installation, metallic conduit runs in all slabs laid on grade or in contact with the earth or exposed in damp locations, with two (2) heavy coats of asphaltum rust-resisting compound.

D. Encase conduits 2-1/2" or larger run underground, outside, or under buildings, in concrete envelopes a minimum of 3" thick, except as indicated otherwise on Drawings or stubouts. Conduits 2 and smaller laid 18" below finish surface in soil.

E. Low voltage runs underground outside buildings, 1-1/4" or smaller, may be G.I. or sherardized steel conduit, with machine applied wrapping equal to double wrap or Scotch-Wrap #50 tape, half lapped and quadrupled at joints in lieu of concrete encasement.

F. Service conduits through foundations or concrete members shall run through metal sleeves with adequate clearances for full movement of the conduit. Do not run conduits through footings.

G. Secure conduits run exposed on surfaces with one hole heavy-duty straps or fasten with matching fittings to inserts or trapezes, parallel to building walls and ceilings.

H. Cap all conduit or duct stub-outs with standard factory caps; except cap threaded steel conduit with B.I. water pipe caps in outdoor locations.

I. Use conduit fittings as manufactured by Crouse-Hinds Company, Appleton Electric Co., or approved equal.

J. Employ U.L. liquid tight fittings for use with liquid tight flexible metal conduit.

K. Use unions as manufactured by Appleton, O-Z/Gedney, or approved equal. The use of running threads will not be permitted.

L. Exposed conduit and fittings in chemical rooms shall be nonmetallic rigid polyvinyl chloride, corrosion resistant rated suitable for installation in corrosive environments and in accordance with the latest CEC requirements.

2.3 EQUIPOTENTIAL BONDING / GROUNDING

A. Bond together and ground to a common ground at a single point all metallic conduit, piping systems, pool reinforcing steel, metal parts of ladders, lifeguard stands, handrails and their supports and the like. The solid copper bonding conductor shall not be smaller than #8 copper.

2.4 WIRING CONNECTIONS

A. Make connections without strain on conductors, allowing the conductors to take a natural position after connections or taps are made. Include all strand of wire in making the connection.

B. Make connections for wiring by one of the following means:

1. Make all taps or connections to conductors with compression type connectors except those smaller than #8 B&S gauge may have soldered connections. Solderless connections for #10 AWG or smaller may be used and shall be "Scotchlok", Buchanan, or approved equal. For #8 AWG or larger, they shall be T&B "LockTite", Burndy "Versitaps", or approved equal.
2. All cable or conductor terminal lugs shall be Burndy "Quicklug", Ilsco, or approved equal. Two-piece stamped lugs and solder lugs will not be approved.
3. Paint taped splices in damp or outdoor locations with two (2) coats of insulating paint.
4. Tag all branch circuit wires with circuit number at the panelboard and at each point of use with linen or plastic tags.

2.5 CONDUCTORS

A. Copper RHW or THW. Do not make splices between boxes.

2.6 COLOR CODING

A. Neutrals (identified conductors shall be white).

B. Phase conductors shall be red for phase B; blue for phase C.

C. Green shall be used for mechanical equipment and receptacle grounds only.

2.7 MOTOR WIRING

A. Make final connections to motors with the required AWG (Minimum #12), Flamenol machine tool wire, 19 strand. Control wiring for equipment shall be Flamenol machine tool wire, 19 strand of required AWG. Provide corrosion resistant junction boxes at each item of equipment to change from standard building wiring to machine tool wire.

B. Phase motors as proper in direction of rotation.

2.8 PANELBOARDS

A. Panelboards shall be flush or surface mounting as indicated with circuit breakers as shown on panel schedule, hinged lockable doors, index card holders and proper bussing.

B. Where indicated on the drawings, panelboards shall be furnished with subfeed breakers and/or lugs, split bussing, contractors, time switches, relays, etc., as required.

C. All panelboards shall be keyed alike.

D. All panelboard enclosures shall be corrosion resistant rated in accordance with the latest CEC requirements.

E. Furnish corrosion resistant panelboard enclosures and terminal cabinets with Yale 46515 flush locks and LL806 keys except where indicated otherwise herein. Fasten the trim to panel boards and terminal cabinet by means of concealed, bolted or screwed fasteners accessible only when the door is open.

F. Panelboards 208/120 volt, three phase, 4 wire, S/N or 120/240 volt, single phase, 3 wire, S/N.

Panelboard types as manufactured by:

Westinghouse	Type B10B
General Electric	Type NLAB
Square D	Type NQOB

G. Panelboards for 480/277 volt, three panes, 4 wire, S/N.

Panelboard types as manufactured by:

Westinghouse	Type Pow-R-Line 2
General Electric	Type AE
Square D	Type NEHB
Sylvania	Type NH1B
I.T.E.	Type Approved Equal

H. Panelboard for bussing sizes thru 400 amp shall be 20" wide surface mounted type. Recess mounted type shall have a 20" wide (maximum) recess metal enclosure with trim plate cover extending 1" on all sides of enclosure. Depth shall be 5-3/4" nominal. Height of panel as required for devices.

I. Provide 6" additional gutter space in all panels where double lugs are required, or where cable size exceeds bus size. Minimum bottom gutter space shall be 6" high. 12" additional gutter space may be required for aluminum feeders where used.

J. Panelboards shown on the drawings with relays, time clocks or other control devices shall have a separate metal barriered compartment mounted above panel with separate hinged locking door to match panelboard. Provide mounting sub-base in cabinet for control devices and wiring terminal strips.

K. Panelboard shall have a circuit index card holder removable type, with clear plastic cover. Index card shall have numbers imprinted to match circuit breaker numbers.

2.9 CIRCUIT BREAKERS

A. Breakers shall have a minimum short circuit interrupting rating of 10,000A symmetrical for panelboard voltage thru 240 volt and 14000A for panelboards thru 600 volts or as specified on the drawings. In no case shall the interrupting rating be less than the bus withstand rating unless noted otherwise on the drawings.

B. Circuit breakers as manufactured by the following companies only are acceptable:
1. General Electric Company
2. Square D Company
3. Westinghouse Company
4. I.T.E. Company

C. Circuit breakers shall be arranged in the panels so that the breakers of the proper trip settings and numbers correspond to the numbering in the panel schedules on the drawings. Circuit numbers of breakers shall be black-on-white micarta tabs or other previously approved method. Circuit number tabs which can readily be changed from front of panel will not be accepted. Circuit number tabs shall not be attached to or be a part of the breaker.

D. Where two or three pole breakers occur in the panels, they shall be common trip units. Single pole breakers with tie-bar between handles will not be accepted.

E. All circuit breakers shall be padlockable in the "off" position. Locking facilities shall be riveted or mechanically attached to the circuit breaker (submit sample for approval). Other means of attachment shall not be accepted without prior written approval of Architect.

F. Where branch circuit breakers supply the power to motors and signal systems, the breakers shall be furnished with lockout clips, mounted in the "on" position. The breakers shall be able to trip automatically with lockout clips in place.

G. Panelboard circuit breakers shall be bolt-on type.

2.10 BUSSING

A. Bussing shall be rectangular cross section copper, or full length silver or tin-plated aluminum.

B. Bussing shall be braces to withstand symmetrical short circuit ratings as follows or as noted on drawings. In no case shall bus short circuit bracing be less than specified circuit breakers.

C. Each panelboard shall be equipped with a ground bus secured to the interior of the enclosure. The bus shall have a separate lug for each ground conductor. No more than one conductor shall be installed per lug.

2.11 POOL MECHANICAL EQUIPMENT ENCLOSURES, TERMINAL CABINETS & MISC CABINETS

A. All pool mechanical equipment enclosures, terminal cabinets and miscellaneous cabinets in the pool mechanical room or chemical storage rooms shall be corrosion resistant rated in accordance with the latest CEC requirements. Enclosures and all cabinets shall be flush mounted (except where noted a surface) of the size indicated on the drawings, and complete with hinged lockable doors and the number of 2-way screw terminals required for termination of all conductors. Terminal cabinet locks to operated form same key used for panelboards. The trim to terminal cabinets shall be fastened by means of concealed bolted or screwed fasteners accessible behind door to terminal cabinets. Terminal cabinets shall have 5/8" plywood backing.

B. Provide engraved nameplate on each enclosure and cabinet indicating its designation and system (i.e., Swimming Pool - Panel ‘SP’).

2.12 MOTOR CONTROL INDIVIDUAL STARTERS

A. Manual Motor Starters:
1. Provide flush or surface mounting manual motor starters with number of poles and size of thermal overload heaters as required for the motor being controlled (equipped with overload heaters, one for each motor lead). Back boxes shall be supplied with all flush mounting starters whether they are toggle type requiring only a 4" square outlet box or the larger type requiring a special box and cover designed to accept the particular unit. All box types shall be corrosion resistant rated in accordance with the latest CEC requirements
2. Unless otherwise noted on the drawings, all manual starters for single phase motors, smaller than 1 h.p., shall be the compact toggle type. Manual starters for

all single phase motors, 1 to 5 h.p., and all three phase motors up to 5 h.p. shall be the heavy duty type.

3. Where manual motor starter is shown with pilot light, the pilot light shall be installed in a separate outlet box adjacent to the starter outlet, and engraved nameplate in indicate function of pilot light.
4. The following motor starters as manufactured by:

Manufacturer	Single Phase 1HP and Below	Others
Arrow Hart	Type RL	Type LL
General Electric	CR 101	Class CR 1062
I.T.E.	Class C10, C11 or C12	Class C20
Square D Company	Class 2510, Type A	Class 2510, Type B & C
Westinghouse	Type MS	Type A100
Allen Bradley	Approved Equal	Approved Equal.

B. Individual Magnetic Motor Starters:

1. Magnetic motor starters shall be A.C. line voltage, across-the-line units in corrosion resistant rated enclosure in accordance with the latest CEC requirements.
2. All starters located outside of a building whether or not indicated shall be W.P. (weatherproof), and all starters noted W.P. shall be furnished in corrosion resistant rated enclosure in accordance with the latest CEC requirements.
3. Starter shall be horsepower rated for the motor controlled, and shall be equipped with properly sized overload elements. Every pole shall be with overload element.
4. Verify the exact motor current and voltage characteristics with the Contractor supplying the motor before installation of a starter.
5. Each starter shall be equipped with "Hand-Off-Auto" switch or stop-start pushbutton as required.
6. Coils shall be designed to operate on voltage indicated on control diagrams and have built-in-under the voltage release for coil circuit to drop motor starter off the line when the line voltage drops below normal operating voltage.
7. The coil control circuit shall be independently fused, sized to protect coil.
8. Starters to be equipped with running pilot light indication with a "Push-to-Test" feature.
9. Magnetic starters shall have a minimum of two auxiliary contacts. Additional auxiliary contacts shall be provided as required to comply with the requirements of the wiring diagrams on the electrical and mechanical drawings and the description of the function in the Mechanical Section of the Specifications.
10. Minimum starter size shall be NEMA size I unless indicated otherwise.
11. The following types of magnetic motor starters as manufactured by:

Manufacturer	Type

General Electric	Class CR 106
I.T.E.	Class A20
Square D Company	Class 8536
Westinghouse	Type A200 (Size 4 Max.) or Class II-200 (Sizes 5-8)

2.13 INDIVIDUAL COMBINATION MOTOR STARTERS

A. Combination starter shall incorporate fused disconnect switch and individual magnetic motor starter in a common enclosure. Combination starters shall be mounted in corrosion resistant rated enclosure in accordance with the latest CEC requirements.

B. Starters shall comply with NEMA standards, size and horsepower as indicated on drawings General Electric, Square D, Westinghouse or I.T.E.

C. The disconnect handle used on combination starters shall control the disconnect device with the door opened or closed. The disconnect handle shall be clearly marked as to whether the disconnect device is "ON" or "OFF", and shall include a two-color handle grip, the black side visible in the "OFF" position indicating a safe condition, and the red side visible in the "ON" position indicating an unsafe or danger condition.

D. All starters used in combination starters shall be manufactured in accordance with the latest published NEMA standards, sizes, and horsepower ratings. These starters shall be furnished with three melting alloy type thermal overload relays.

E. Thermal units shall be of one-piece construction and interchangeable. The starter shall be inoperative if a thermal unit is removed.

2.14 MOTOR CONTROL CENTER, INTERLOCKS AND CONTROL DEVICES

A. Refer to mechanical and plumbing drawings and specifications and provide all control devices including timeswitches, relays and interconnection of starters of required.

B. Mount all relays and timeswitches in a separate compartment in motor control center unless otherwise indicated.

C. Whether shown on mechanical and plumbing drawings or control center schedules or not, where motors are controlled by external devices (i.e., thermostats, relays, float or pressure switches, etc.) or interlocked with other motors, each motor starter to be equipped with a "Hand-Off-Auto" selector switch in starter cover. Other starters equipped with a "Start'Stop" pushbutton station in starter cover. The Contractor shall be responsible to submit a complete and detailed set of shop drawings, electrical schematic design along with electrical component cut sheets from the MCC panel or the interlock control device manufacturer. RSD Total Control: Allan Pearson 949-380-7878, South Coast Controls: Anthony Ellis 714-998-5656 or approved equal.

2.15 FUSES

A. Fuses shall be dual element, current limiting type, U.L. Class RK5 unless otherwise indicated on the drawings. Provide one spare set of fuses of each size and type in each motor control center.

2.16 TIME CLOCKS

A. Time clocks shall be provided for all underwater lighting systems and swimming pool circulation pumps not controlled by filter microprocessors.

B. Contacts shall have a minimum rating of 40 amperes at 277V.

C. Timing motor shall be heavy duty synchronous, self starting, high torque type, and shall be rated at 120, 208, 240, 277 volt 60 Hz.

D. Motor shall operate normally at temperature range of -60 degrees Fahrenheit to +120 degrees Fahrenheit.

E. Dial shall be 3" diameter, clearly calibrated with day/night zones and 24 hour rotation, with gear to provide one revolution yearly which automatically varies the on/off settings each day according to seasonal changes. Day and month of the year shall show clearly through calendar window on the dial.

F. Time clocks shall be equipped with 7-spoke omitting wheel marked with days of the week.

G. Time clocks shall be housed in a corrosion resistant rated enclosure in accordance with the latest CEC requirements.

H. Acceptable manufacturers are Intermatic, Tork, Paragon, or approved equal.

2.17 GROUND FAULT CIRCUIT INTERRUPTERS

A. Minimum rating shall be 20 amperes, 125V, 5 milliampere trip setting, Class A per UL943.

B. Manufacturer to be Crouse-Hinds, Leviton, or approved equal.

2.18 BOXES

A. Boxes shall be of the size required by ordinances or larger, must be corrosion resistant in accordance with the latest CEC requirements and of pressed galvanized code gauge steel where concealed or exposed on ceilings. Exposed boxes on walls below 7'6" shall be cast steel similar to "FA" condulets.

B. Outlets to be surface where wiring is exposed and flush in areas where conduit is concealed.

C. Provide surface outlets with proper corrosion resistant surface covers. Box and cover shall be deep enough to provide at least 1/4" clearance between back of device and back of box. Where box contains more than one device, use corrosion resistant rated gang box with proper cover in accordance with the latest CEC requirements. Surface outlet boxes shall be of the threaded hub type wherever below 8'0".

D. If necessary for cable installation, additional pull boxes or junction boxes may be installed in accessible locations. Exposed pull boxes and junction boxes shall be corrosion resistant rated in accordance with the latest CEC requirements.

E. Provide exposed junction boxes with proper flat blank galvanized cover. If necessary for cable installation, additional pull boxes or junction boxes may be installed in accessible locations.

F. Where exposed to weather pull boxes larger than outlet boxes are required, galvanized code gauge sheet steel boxes may be used with covers attached by brass machine screws. Boxes exposed to the weather shall be approved for the purpose, and conduit entrances shall be on the bottom made by means of an interchangeable hub with gasket and adapter nut. Pull boxes not shown on Drawings may be added only after approval of size and location is obtained.

G. For outlets exposed to weather or where noted, cast outlet boxes shall be Crouse-Hinds, Appleton, or approved equal. Boxes shall have proper number and size hubs. Device plates, covers, adapters and boxes shall be as manufactured by Crouse-Hinds, Appleton, or approved equal.

H. Exposed junction boxes, outlet boxes and pull boxes for pool chemical rooms shall be nonmetallic suitable for a corrosive environment and in accordance with the latest CEC requirements.

2.19 IDENTIFICATION MARKINGS

A. Plainly mark all motor and electrical appliance control equipment indicating the equipment controlled with engraved metal tags.

B. Provide laminated plastic nameplates on panelboards on the outside of the door at the top indicating panel designation and feeder source.

C. Provide laminated plastic nameplates on distribution switchboards and motor control centers at the top center indicating panel designation and feeder source.

D. Identify each distribution switchboard and motor control center circuit breaker with a laminated plastic nameplate indicating its' use.

E. Type panelboard directories on the forms provided with the equipment, indicating the use of each branch circuit breaker.

F. Fasten all laminated plastic nameplates to surfaces with two (2) or more screws.

PART 3 - EXECUTION

3.1 INSPECTION

A. Verify conditions at the Project site before submitting bid. Be responsible for providing all necessary wiring for the new electrical systems. Wherever wiring is being disrupted due to remodeling or changes, reconnect existing and provide new wiring circuits to accomplish a fully operable system at no additional cost to the Owner.

3.2 COORDINATION

A. The Drawings are essentially diagrammatic and indicate the desired location, size, routes, connection points, etc., and are to followed as closely as possible. Proper judgment must be exercised in executing the Work so as to provide the best possible installation in the available space and to overcome difficulties, limitations or interference wherever encountered. Be responsible for the correct placement of this Work, the proper location and connection in relation to Work of other trades, for determining the exact location of all conduits, outlets and equipment, and for installing the conduits in such a manner as to conform to the structure, avoid obstruction, preserve

headroom and keep openings and passageways clear. Particular attention is directed to the close coordination required on exposed Work. Locations shown on Architectural or Mechanical Drawings if different than those shown on Electrical Drawings should be communicated to the Owner's Representative in writing for clarification.

3.3 INSTALLATION

A. Trenching and Backfill: Conform with requirements of Section 131101. Provide minimum cover as required by Code.

B. Conduit Installation:
1. Conduit and metallic raceway systems shall be mechanically and electrically continuous from sources of current to all outlets in a manner to provide a continuous grounding path. Close ends of conduit during construction to prevent entrance of dirt or moisture.
2. Securely fasten conduit to the building construction within three feet of each outlet and within every ten feet thereafter. Secure it to boxes, cabinets, pull boxes, terminals with two locknuts and ends equipped with bushings or a terminal fitting. Cut square with ends carefully reamed.
3. Make bends or elbows so that the conduit will not be injured or flattened.
4. Use insulated metallic bushings in all places where bushings are required.
5. Run exposed conduits level or plumb and parallel to the construction members of the building. No cutting across or diagonal runs will be permitted. Neatly surmount structural obstructions encountered on conduit runs by the use of fittings or pull boxes.
6. Identify feeder conduits by stamped metal tags secured to exposed section of conduit in main or sub-panels.
7. Make up all threaded conduit joints gas and watertight with conductive sealer except conduit above ground in dry indoor locations.
8. Rigidly support all boxes independently of the conduit system.

C. Connections to Equipment:
1. Fully connect, in an approved manner, all electrical outlets, apparatus, motors, equipment, fixtures, wiring devices and appliances whether they are installed under the Electrical Contract or not, which require electrical connections, to the corresponding electrical system outlet.
2. Where the Work of this Section requires connections to be made to equipment that is furnished and set-in-place under other Sections, obtain such roughing-in dimensions from the manufacturer or supplier of each item as required and assume full responsibility for the installation of the connections thereto.

3.4 ADJUSTMENT AND CLEAN-UP

A. Preliminary Operation: Should the Owner's Representative deem it necessary to operate the electrical installation or any part thereof prior to Substantial Completion of the Work, consent to such preliminary operation and supervise conduction of same. Subcontractor shall pay all costs occasioned by such operation. Preliminary operation shall not be construed as an acceptance of any Work installed under this Contract.

B. Clean-up: Upon completion of the Work of this Section, immediately remove all swimming pool electrical materials, debris and rubbish occasioned by this Work to the approval of the Owner's Representative.

END OF SECTION 131108

SECTION 21 11 00
FACILITY FIRE-SUPPRESSION WATER-SERVICE PIPING

PART 1 - GENERAL

1.01 DESCRIPTION OF WORK

A. Work includes but is not necessarily limited to that shown on the approved plans and requirements of this section.

B. Private site fire water system shall include the following:

1. Connection of private fire main system to lateral(s) at property line(s), as shown on approved plans.

2. Approved backflow prevention assembly or assemblies.

3. All on-site pipe, fittings, valves, hydrants, and appurtenances as shown on the approved plans.

4. Location and configurations of fire department connections as approved by responding fire agency.

5. Building system service entry at each riser room.

6. All tests, flushing, inspections and sanitation treatments as required to obtain approval by all authorities having jurisdiction including local fire authority, serving water department and DSA Inspector of Record.

7. Fees, permits, inspections and tests.

8. Meetings and correspondence with project team members and authorities having jurisdiction to confirm specific requirements for this project, including:
   a. Locations and methods of discharging water from tests and flushing.
   b. Requirements for pipe and fitting exposure to facilitate visual inspections.

C. Refer to Section 21 13 13 "Wet-Pipe Fire Sprinkler System" for interior building systems work that is not a part of this section.

1.02 RELATED WORK IN OTHER SECTIONS

A.	General Requirements	Division 01
B.	Wet-Pipe Fire Sprinkler Systems	Section 21 13 13
C.	General Plumbing Requirements	Section 22 05 00
D.	Fire Alarm	Section 28 31 11
E.	Water Utility Distribution Piping	Section 33 11 00

1.03 QUALITY ASSURANCE

A. Manufacturers Qualifications: Firms regularly engaged in manufacture of listed and/or approved fire protection water system equipment and accessories of types, materials, and sizes required and whose products have been in satisfactory use in similar service for not less than 5 years.

B. Installer's Qualifications: Firm with at least 3 years of successful installation experience on projects with fire water work similar to that required for project.

C. Prior to acceptance of the work on private property, obtain/verify acceptance of all work in the public domain from the serving utility and submit copies of the Certificates of Completion to the inspector and owner.

1.04 CODES AND STANDARDS

A. In addition to complying with all pertinent standards, codes and regulations, comply with all requirements of:

1. California Building Code, 2019 edition.
2. California Fire Code, 2019 edition.
3. State of California, Division of the State Architect.
4. Kern County Fire Department requirements.
5. Kern Delta Water District requirements.
6. NFPA 13, 24, 25 and 72 (as adopted by the State of California).
7. Underwriters Laboratories (UL) and FM Global (FM) listed products.
8. American Water Works Association (AWWA) requirements and specifications.

B. Other Referenced Standards:

Unless otherwise noted on the plans, all work shall conform to the following standard specifications and drawings:

1. Standard Specifications:
   a. Kern Delta Water District Standard Specifications for new construction, current edition.
   b. Kern County Fire Authority Design Guidelines and Standards, current edition.
   c. California Dept. of Transportation, "Manual of Traffic Controls for Construction and Maintenance Work Zones", California MUTCD, 2012 ed.
   d. Regional Cross-Connection Control and Backflow Prevention Programs.

1.05 SUBMITTALS

A. Submit materials data sheets for all proposed product substitutions from the approved plans and data sheets. Statement of equivalency shall accompany items not exactly comparable to the approved product. Substitution of backflow assemblies shall only be allowed if submitted to and approved by DSA Fire Life Safety review with hydraulic calculations for any additional pressure loss. Substitutions shall be at the contractor’s risk, and at no additional expense to the owner.

B. Record Drawings: At project closeout, submit record drawings of installed fire water system piping and products, in accordance with requirements of Division 1.

C. Maintenance Data: Submit maintenance data and parts lists for fire water system materials and products. Include this data, product data, shop drawings, and record drawings in maintenance manual; in accordance with requirements of Division 01

1.06 PROJECT CONDITIONS

A. Interruption of Existing Water-Distribution Service: Do not interrupt service to facilities occupied by District or others unless permitted under the following conditions and then only after arranging to provide temporary water-distribution service according to requirements indicated:

1. Notify Owner or Construction Manager no fewer than five days in advance of proposed interruption of service.

2. Do not proceed with interruption of water-distribution service without Owner or Construction Manager's written permission.

PART 2 – PRODUCTS

2.01 IDENTIFICATION

A. Underground-Type Plastic Line Marker: Manufacturer's standard permanent, bright-colored, continuous-printed plastic tape, intended for direct-burial service; not less than 3" wide x 4 mils thick. Provide tape with printing reading "CAUTION BURIED WATER LINE BELOW" (or similar language).

2.02 PIPE AND PIPE FITTINGS – GENERAL

A. Provide ells, tees, reducing tees, couplings, and other required piping accessories of same type and class of material as conduit, or of material having equal or superior physical and chemical properties as acceptable to Owner's Architect/Engineer and Inspector.

B. Joints for pipe shall be push-on joints as specified in ASTM D 3139. Joints between pipe and metal fittings, valves, and other accessories shall be push-on joints as specified in ASTM D 3139, or shall be compression-type joints/mechanical-joints as respectively specified in ASTM D 3139 and AWWA C111. Each joint connection shall be provided with an elastomeric gasket suitable for the bell or coupling with which it is to be used.

1. Gaskets for push-on joints and compression-type joints/mechanical-joints for joint connections between pipes and metal fittings, valves, and other accessories shall be as specified in AWWA C111 respectively for push-on joints and mechanical-joints.

2. Mechanically coupled joints, using a sleeve-type mechanical coupling, may be used as an optional jointing method in lieu of push-on joints on plain-end PVC plastic pipe.

2.03 COPPER TUBE AND FITTINGS

A. Soft Copper Tube: ASTM B 88, Type L, water tube, annealed temper.

1. Copper, Solder-Joint Fittings: ASME B16.18, cast-copper-alloy or ASME B16.22, wrought-copper, solder-joint pressure type. Furnish only wrought-copper fittings if indicated.

B. Hard Copper Tube: ASTM B 88, Type K or Type L, water tube, drawn temper.

1. Copper, Solder-Joint Fittings: ASME B16.18, cast-copper-alloy or ASME B16.22, wrought-copper, solder-joint pressure type. Furnish only wrought-copper fittings if indicated.

C. Bronze Flanges: ASME B16.24, Class 150, with solder-joint end. Furnish Class 300 flanges if required to match piping.

D. Copper Unions: MSS SP-123, cast-copper-alloy, hexagonal-stock body with ball-and-socket, metal-to-metal seating surfaces, and solder-joint or threaded ends.

2.04 DUCTILE-IRON PIPE AND FITTINGS

A. Mechanical-Joint, Ductile-Iron Pipe: AWWA C151, with mechanical-joint bell and plain spigot end unless grooved or flanged ends are indicated.

1. Mechanical-Joint, Ductile-Iron Fittings: AWWA C110, ductile- or gray-iron standard pattern or AWWA C153, ductile-iron compact pattern.

2. Glands, Gaskets, and Bolts: AWWA C111, ductile- or gray-iron glands, rubber gaskets, and steel bolts.

B. Push-on-Joint, Ductile-Iron Pipe: AWWA C151, with push-on-joint bell and plain spigot end unless grooved or flanged ends are indicated.

1. Push-on-Joint, Ductile-Iron Fittings: AWWA C110, ductile- or gray-iron standard pattern or AWWA C153, ductile-iron compact pattern.

2. Gaskets: AWWA C111, rubber.

C. Flanges: ASME 16.1, Class 125, cast iron.

2.05 PVC PIPE AND FITTINGS

A. PVC, AWWA Pipe: AWWA C900 bell end with gasket and with spigot end, Pressure Class 150/235 (DR 18) with cast- iron-pipe-equivalent OD. Where pressures may exceed 175 PSI, pipe shall be Pressure Class 200/305 (DR 14).

1. Comply with UL 1285 for fire-service mains as applicable and/or required.

2. Push-on-Joint, Ductile-Iron Fittings: AWWA C110, ductile- or gray-iron standard pattern or AWWA C153, ductile-iron compact pattern.
   a. Gaskets: AWWA C111, rubber.

3. Mechanical-Joint, Ductile-Iron Fittings: AWWA C110, ductile- or gray-iron standard pattern or AWWA C153, ductile-iron compact pattern.
   a. Gaskets: AWWA C111, rubber.

2.06 POLYETHYLENE PIPE AND FITTINGS

A. PE, ASTM Pipe: ASTM D 2239, SIDR No. 5.3, 7, or 9; with PE compound number required to give pressure rating not less than 160 psig.

1. Insert Fittings for PE Pipe: ASTM D 2609, made of PA, PP, or PVC with serrated male insert ends matching inside of pipe. Include bands or crimp rings.

2. Molded PE Fittings: ASTM D 3350, PE resin, socket- or butt-fusion type, made to match PE pipe dimensions and class.

B. PE, AWWA Pipe: AWWA C906, DR No. 7.3, 9, or 9.3; with PE compound number required to give pressure rating not less than 200 psig.

1. PE, AWWA Fittings: AWWA C906, socket- or butt-fusion type, with DR number matching pipe and PE compound number required to give pressure rating not less than 200 psig.

C. PE, Fire-Service Pipe: ASTM F 714, AWWA C906, or equivalent for PE water pipe; FMG approved, with minimum thickness equivalent to FMG Class 200.

1. Molded PE Fittings: ASTM D 3350, PE resin, socket- or butt-fusion type, made to match PE pipe dimensions and class.

2.07 CHLORINATED POLYVINYL CHLORIDE FIRE PROTECTION PIPE AND FITTINGS

A. CPVC, listed for fire protection per UL 1821.

1. LISTED FOR FIRE PROTECTION SERVICE

2.08 TRANSITION FITTINGS

A. One-piece riser sweep, 90° fabricated 304 stainless steel.

1. UL and/or FM approved for fire protection services.
2. Working pressure rating 200 PSI minimum, equivalent to DR 14.
3. Vertical end per AWWA C606 for roll groove and C-207 for flanged pipe.
4. Horizontal end per AWWA C900 and standard ductile iron pipe diameters with UL 157 gasket.

2.09 GATE VALVES

A. Provide flanged or mechanical joint gate valves, listed for fire protection service, 175 psi working pressure for 12" and smaller, 150 psi for sizes larger than 12".

1. Non-rising-Stem, Resilient-Seated Gate Valves
   a. Description: Ductile-iron body and bonnet; with bronze gate, resilient seats, bronze stem, and stem nut.
   b. Standard: AWWA C509. Minimum Pressure Rating: 250 psig.
   c. End Connections: Push on or mechanical joint.
   d. Interior Coating: Complying with AWWA C550.

2. OS&Y, Rising-Stem Gate Valves
   a. Description: Ductile-iron body and bonnet, with bronze gate, resilient seats, and bronze stem.
   b. UL 262, FM approved. Minimum Pressure Rating: 175 psig.
   c. End Connections: Flanged.

B. Indicator Posts: UL 789, FM approved, vertical-type, cast-iron body with operating wrench, extension rod, and adjustable cast-iron barrel of length required for depth of burial of valve. Post shall be listed for use with specific make/model of gate valve.

C. Valve Box and Cap: Telescopic barrel type for use with underground gate valves, cap is to be cast iron and marked "WATER".

2.10 BACKFLOW PREVENTION ASSEMBLY

A. Backflow preventer assembly shall be installed strictly per all requirements and standard drawings of serving water authority. Assembly shall be Reduced Pressure Detector Assembly (RPDA) with bypass and meter as required.

B. Any proposed assembly shall be U.L. classified and/or FM approved for fire protection service and shall be listed by the Foundation for Cross-Connection Control and Hydraulic Research at the University of Southern California.) Verify exact make and model of appliance with serving water authority.

2.11 CHECK VALVES

A. Check valves shall be iron body, bronze mounted, horizontal swing check. As acceptable to authorities having jurisdiction, iron body, bronze, disk wafer check may be used.

B. Check valve shall be U.L/F.M. approved for fire protection use, and recommended by the manufacturer for direct bury where such installation is to be required.

1. Where check valve is installed underground, an approved valve box or other means of accessing the valve for inspections and testing shall be furnished and installed.

C. Iron body, bronze disk threaded or grooved swing check may be installed at Fire Department Connection, and located as acceptable to serving fire department.

2.12 FIRE HYDRANTS

A. General: Hydrants shall conform to serving fire department requirements. Number of hydrants, spacing and proximity to fire apparatus lanes shall be in accordance with approved plans.

B. Hydrants shall be wet-barrel type except where subject to freezing.

C. Hydrants shall be furnished with National Standard (fire hose) Threads (NST). Unless noted otherwise there shall be two 4” and one 2½” ports, individually valved and equipped with caps and chains.

2.13 FIRE DEPARTMENT CONNECTIONS

A. Furnish 4" x 2 1/2" two-way, Siamese fire department connection. Finish and model shall be in conformance with serving fire department requirements. Provide check valve per Section 2.11.

B. Fire department connection piping shall be ductile iron, with corrosion protection as specified in this section. No steel piping shall be installed at fire department connections.

2.14 ANCHORAGES

A. General: Provide anchorages for ells, tees, crosses, plugs, caps, bends, valves, and hydrants. After installation, apply full coat of asphalt or other acceptable corrosion-retarding material to surfaces of ferrous anchorages.

1. Clamps, Straps and Washers: Steel, ASTM A 506.
2. Rods: Steel, ASTM A 575.

3. Rod Couplings: Malleable-iron, ASTM A 197.

4. Bolts: Steel, ASTM A 307.

5. Cast-Iron Washers: Gray-iron, ASTM A 126.

6. Thrust Blocks: Concrete, minimum 2,500 psi.

2.15 CORROSION PROTECTION

A. Encasement for Underground Metal Piping:

1. Standards: ASTM A 674 or AWWA C105.

2. Form: Sheet or tube.

3. Material: LLDPE film of 0.008-inch minimum thickness.

4. Material: LLDPE film of 0.008-inch minimum thickness, or high-density, cross-laminated PE film of 0.004-inch minimum thickness.

5. Material: High-density, cross-laminated PE film of 0.004-inch minimum thickness.

6. Color: Black.

B. Dielectric Fittings

1. General Requirements: Assembly of copper alloy and ferrous materials with separating nonconductive insulating material. Include end connections compatible with pipes to be joined

2. Dielectric Unions
   a. Standard: ASSE 1079.
   b. Pressure Rating: 250 psig.
   c. End Connections: Solder-joint copper alloy and threaded ferrous.

3. Dielectric Flanges
   a. Standard: ASSE 1079.
   b. Factory-fabricated, bolted, companion-flange assembly.
   c. Pressure Rating: 150 psig or 300 psig.
   d. End Connections: Solder-joint copper alloy and threaded ferrous; threaded solder-joint copper alloy and threaded ferrous.

4. Dielectric Flange Insulating Kits
   a. Field-assembled companion-flange assembly, full face or ring type.
   b. Non-conducting materials for field assembly of companion flanges.
   c. Pressure Rating: 150 psig or 300 psig.
   d. Gasket: Neoprene or phenolic.
   e. Bolt Sleeves: Phenolic or polyethylene.
   f. Washers: Phenolic with steel backing washers.

5. Dielectric Couplings
   a. Galvanized steel couplings with inert and noncorrosive thermoplastic lining, with threaded ends.
   b. Pressure Rating: 300 psig.
6. Dielectric Nipples
   a. Standard: IAPMO PS 66.
   b. Electroplated steel nipple complying with ASTM F 1545.
   c. Pressure Rating: 300 psig at 225 deg F minimum.
   d. End Connections: Male threaded or grooved.
   e. Lining: Inert and noncorrosive, propylene.

2.16 ELECTRONIC SUPERVISION

A. Furnish valve supervision, as required by authorities having jurisdiction, at all valves controlling fire protection water supplies, and any required underground conduit thereto.

B. Provide UL/FM approved tamper switch, Model PIVSU-A1, or OSYSU-A1, or UL/FM listed equivalent, 12 or 24 VDC or 120VAC with one set of Form C, single pole, double-throw contacts.

C. Tamper connections shall be furnished and zoned as required by serving fire department.

D. Signals shall be monitored at local fire alarm panel and central station as required and as shown on fire alarm plans.

PART 3 – EXECUTION

3.01 INSTALLATION OF IDENTIFICATION

A. General: During back-filling/top-soiling of underground fire water piping systems, install continuous underground-type plastic line marker, located directly over buried line at 6" to 8" below finished subgrade, but at least 6" above the top of pipe.

3.02 INSTALLATION OF PIPE AND PIPE FITTINGS

A. General: Install exterior fire water systems in compliance with applicable provisions of NFPA 24 and the Standard Specifications for Public Works Construction.

B. Polyvinyl Chloride Pipe: Install in accordance with manufacturer's installation instructions.

C. Depth of Cover: Provide three (3) foot minimum depth of cover over underground piping.

D. Transition from underground to interior building system the passes under footings and on-grade slab shall utilize a one-piece riser sweep.

1. Pipe and fittings shall be installed so that no mechanical joints are located below structural footing or slab on grade.
2. All penetrations of floors and walls shall maintain minimum 2” annular clearance around entire circumference of piping.
3. All piping shall be restrained using mechanical joint fittings, rods and/or thrust blocks.
4. All pipe and fittings shall be protected from corrosion as specified in this section.

3.03 INSTALLATION OF VALVES

A. General: Install valves as indicated. Provide post indicator for control valves where shown on plans.

B. Control Valves: Install post indicator valve at each connection into building, locate 40' from building outside wall, or as shown on approved plans.

C. Shutoff Valves: Install shutoff valve ahead of each hydrant.

3.04 CONCRETE PADS

A. As required by serving fire and/or water department, furnish concrete pads under all fire hydrants, backflow prevention assemblies and fire service valve assemblies per standard drawings and details.

1. Where pipe, fittings and devices are installed in the horizontal position, furnish approved pipe stands or other means of support.

3.05 SIGNAGE

A. Provide signage as required by serving fire department to identify all fire protection system valves and fire department inlet connections. Signs shall be building and system specific and shall be constructed of durable, weather-resistant materials and shall be finished or coated or otherwise protected as required to prevent damage and fading from ultra-violet light.

1. As required by serving fire authority, signage shall be affixed to valves and inlet connections using lightweight chain with zinc or galvanized finish.
2. Lettering shall be of the minimum size and color required by serving fire department.
3. Where required, signage shall be installed on posts and elevated above finished grade.

3.06 FIELD QUALITY CONTROL

A. Piping Tests: Conduct piping tests before joints are covered, and after thrust blocks have sufficiently hardened. Fill pipeline with water 24-hrs prior to testing, and apply test pressure to stabilize system.

B. Hydrostatic Tests: Test at not less than 200 psi for 2 hours, or at 50 psi above maximum static pressure where greater than 150 psi.

1. Test shall be considered a fail if leakage exceeds allowable as prescribed in NFPA 24, or as required by authorities having jurisdiction.
2. Increase pressure in 50 psi increments and inspect each joint between increments. Hold at test pressure for one hour, decrease to 0 psi. Slowly increase again to test pressure and hold for one more hour.

C. Upon acceptance of hydrostatic testing by DSA Inspector of Record, the entire fire main system shall be flushed in accordance with the procedures described in NFPA 24. Flow rates shall be as required by NFPA 24, or at the hydraulically calculated water demand rate of the system, whichever is greater.

1. Erosion and storm drain controls, conformance to local best practices and the collection/treatment of discharge as required shall be the responsibility of this contractor.

D. Operating Tests: Open and close all valves and hydrants under system water pressure. Order required operational tests by serving Fire and Water Departments.

3.07 COMPLETION

A. Closeout

1. Upon completion and approval of system, and prior to occupancy, provide instruction to the Owner, or Owner's representative, in all details of system operation and maintenance. Prepare and submit maintenance and operation manual per other sections of specifications as applicable.
2. Provide three copies of final inspection and certification as prescribed by Owner's Insurance Underwriter, and other authorities having jurisdiction.
3. Furnish fully executed NFPA Materials and Test Certificate to Owner or Owner’s representative, local fire authority, architect and to DSA Inspector of Record.

4. Submit two copies of guarantee per Division 01.
5. Provide three (3) copies of system "As-Built" drawings to the Owner or Owner's representative. Drawings shall show actual installation details including all piping and equipment locations, room or facilities modifications, etc. One (1) copy of drawings shall be on reproducible type media.

B. Clean Up

1. Equipment, appurtenances, fixtures and exposed piping shall be clean, and all excess dope and oil shall be removed. Sprinkler heads shall be cleaned without the use of any solvents.
2. Upon completion of work, remove all surplus material, debris, and equipment associated with or used in the execution of this work. Sweep work and storage areas, as required, to remove metal shavings and oily residue.

END OF SECTION

Section 21 13 13
Wet-Pipe Fire Sprinkler Systems

PART 1 - GENERAL

1.1 DESCRIPTION

A. Work includes, but is not necessarily limited to, the following work areas:

1. Installation of a complete wet-pipe automatic fire sprinkler systems in all areas shown on plans including all interior compartments, exterior soffits (where required) and combustible concealed spaces if any.
2. Compilation of record drawings by installing contractor, including all field changes and installing contractor's C-16 license number.
3. Connection of interior fire sprinkler systems to site fire service laterals, at points of connection shown on fire protection and civil site plans.
4. Test valves, drain lines, and all other inspection components.
5. All coring, drilling, sleeving and chasing required for piping installation, as approved by Architect and Structural.
6. Local audible alarm and connection points for central station monitoring, as shown on plans and as specified.
7. Fees, permits, inspections and tests.
8. Meetings and correspondence with project team members to confirm specific requirements for this project, including:
   a. Location and methods of discharging water from test and drain connections.
   b. Zoning and signaling requirements for alarm, detection and monitoring systems.

1.2 RELATED WORK IN OTHER SECTIONS

A.	General Requirements	Division 01
B.	Exterior Painting	Section 099113
C.	Interior Painting	Section 099123
D.	Common Work Results, Plumbing	Section 220500
E.	Plumbing	Division 22
F.	Fire Alarm	Section 283111
G.	Water Utility Distribution Piping	Section 331100

1.3 QUALITY ASSURANCE

A. Qualifications of Fabricators and Installers

1. For actual fabrication and installation of sprinkler systems, use only personnel who are thoroughly trained and experienced with the products involved, and in the recommended methods of their installation.
2. Installing contractor shall have a California C-16 license and be experienced in design and installation of systems in projects of similar size and scope.

1.4 REFERENCES

A. In addition to complying with all pertinent standards, codes and regulations, comply with all requirements of:
1. California Building Code, 2019 edition.
2. California Fire Code, 2019 edition.
3. State of California, Division of the State Architect.
4. Kern County Fire Department requirements.
5. Kern Delta Water District requirements.
6. NFPA 13, 24, 25 and 72 (as adopted by the State of California).
7. Underwriters Laboratories (UL) and FM Global (FM) listed products.
8. ICC Evaluation Service listed products.

1.5 SUBMITTALS

A. Shop Drawings

1. Within 30 days after award of Contract, submit shop drawings to the Architect for review. A complete submittal shall include the following:
a. Shop drawings shall be in compliance with approved plans.
b. Location of all switches, bells and electrical connections for alarm system, as described in this specification.
c. Location of connections to drain receptors for test and drain discharge.
d. Where revisions are proposed due to coordination with work of other trades, they shall be clearly illustrated and called out for review.
e. Where value-engineered revisions are proposed, they shall be clearly illustrated and called out for review.
f. Notations and identifying marks for fabrication may be included.

2. Submit materials data sheets for all proposed product substitutions from the approved plans and data sheets. A statement of equivalency shall accompany items that are not exactly comparable to the approved product. Proposed substitutions of hanger and bracing materials shall only be allowed if submitted to and approved by DSA Fire Life Safety and Structural review with all required calculations and written acceptance by project structural engineer. Such substitutions shall be at the contractor's risk and at no additional expense to the owner.

B. Maintenance Manual

1. At close-out, submit maintenance manual describing maintenance schedules, replacement parts, and operational requirements.

C. Guarantee

1. Contractor shall guarantee fixed fire protection system, for a period of two years after date of final inspection, from leaks and other failures from materials and workmanship. Guarantee shall include repair of damage to Owner.

1.6 COORDINATION

A. Coordinate work with that specified in other sections before start of installation. Any installation found to be in conflict with other trades due to neglected coordination, shall be removed and reinstalled as directed by the Architect at no additional expense to the Owner.

B. Contractor shall contact the Architect and obtain necessary information to design fire sprinkler system to fit into allotted spaces without interfering with work by other trades.

C. Coordinate with Plumbing section for size and location of drain receptors, where required or shown for draining and testing fire sprinkler risers and systems. All drain piping shall discharge into the receptors and not through walls or curbs, unless noted otherwise.

PART 2 - DESIGN AND MATERIALS

2.1 GENERAL DESIGN CRITERIA

A. Coverage and Scope

1. Stage, kitchen, food preparation, storage, custodial and utility areas shall be protected for Ordinary Hazard. Sprinklers shall be spaced at a maximum coverage of 130 sq. ft. for standard spray sprinklers.
2. All other areas shall be protected for Light Hazard. Sprinklers shall be spaced at a maximum coverage of 225 sq. ft. for standard spray sprinklers or as shown on plans for sidewall or extended coverage sprinklers.

B. System shall be designed using point of connection as shown on drawings, and as described in this specification.

2.2 MATERIALS AND PRODUCTS - GENERAL

A. All material installed shall be approved and/or listed for fire protection use by the referenced authorities, codes and standards. All material shall be new and without field modifications.

2.3 SPRINKLERS

A. General

1. All sprinklers shall be of similar make and appearance and shall have the same bulb or link and finish except where otherwise required by exposure to heat sources, freezing temperatures, corrosive environment, etc.

B. Interior Finished Ceilings and Exterior Soffits

2. Provide recessed standard spray pendent, with white polyester finish and matching escutcheon.
3. Listed corrosion-resistant sprinklers shall be installed at exterior areas, with white polyester or Teflon finish and matching escutcheon.

B. Concealed Areas, Unfinished Ceilings, and Service Areas

1. Provide standard spray upright or pendent, with white finish.
2. Where required, escutcheons shall be two-piece, style #401 with white painted finish at areas with ceilings.

C. Temperature Ratings and Response Type

1. Sprinklers below finished ceilings, and in all other occupied areas shall have a temperature rating of Ordinary (155-165° F), except as noted below.
    a. Sprinklers in unventilated spaces and under exterior canopies shall have a temperature rating of Intermediate (200-212° F).
    b. Sprinklers in zone of influence of space heaters or other heat-producing equipment shall have a temperature rating of High (250-300° F), unless otherwise required by code.
    c. All sprinklers shall be listed, quick-response type.

2.4 HANGERS AND SUPPORTS

A. General

1. Provide hangers approved by UL/FM and NFPA 13 for fire sprinkler systems. Shop fabricated supports shall be designed to meet requirements of NFPA 13, and must be certified by a registered professional engineer.
2. Provide earthquake bracing in accordance with UL/FM, NFPA 13 and ASCE 7. Locations of all bracing shall be shown on shop drawings in conformance with approved plans. All bracing shall be assembled and installed per NFPA 13 and manufacturer's installation instructions.
3. Size all anchors and fasteners per NFPA 13. All lag screws, bolts and drive screws shall be installed as required by codes and accepted good practices.
4. All fasteners and/or anchors proposed for use in concrete construction shall be specifically listed and approved for use on fire sprinkler systems in seismic zones. Powder-driven studs shall not be used unless all system components including installation tool and pins are listed.

2.5 INTERIOR SPRINKLER PIPE AND FITTINGS

A. General

1. All pipe and fittings shall be new, acceptable to authorities having jurisdiction, per all applicable standards and codes, and free from damage and distortion.

B. Product Characteristics

1. Black steel, Schedule 40, ASTM A-53/135/795, for all piping, with threaded joints and fittings.
2. Black steel, Schedule 10, ASTM A-53/135/795, for all piping, with non-threaded joints and fittings.
3. Threaded fittings shall be of cast or malleable iron, class 125 or 150, conforming to ANSI B16.3 and ANSI B16.4.
4. Flanged fittings shall be provided where required. Flanges shall be of cast iron, class 125, conforming to ANSI B16.1.
5. Welded fittings shall be of wrought steel, conforming to ANSI B16.9.
6. One-piece reducing fittings shall be used wherever a change is made in pipe size. Bushings shall not be used, except where fittings of the required size are not available.
7. Grooved thin wall steel pipe connections shall be made using a UL/FM approved ductile iron coupling, with rubber gasket. Installation shall be per manufacturer's instructions.
8. All piping shall be joined with welded, threaded or grooved fittings. Fittings for hole-cut connections are not acceptable.

2.6 ACCESSORY CABINET

A. Furnish metal sprinkler cabinet in riser room, with reserve supply of sprinklers as required by NFPA 13. Include one suitable head wrench for each type of sprinkler installed. Stock shall include all types and temperature ratings.

2.7 SIGNS

A. Provide metal signage permanently marked to show function, for all valves, controls and related assemblies. Locate as required by NFPA 13 and authorities having jurisdiction. Where signs are required to identify valves or assemblies in hidden or void spaces, locate as directed by Architect.

B. Provide sign outside where the riser is located "Fire Sprinkler Riser Inside".

2.8 PROTECTION OF SPRINKLERS

A. Provide UL/FM listed guards for sprinkler heads located in areas susceptible to mechanical damage.

2.9 ESCUTCHEON PLATES

A. Provide chrome-plated escutcheons where exposed piping penetrations are made through finished walls and ceilings. Plates shall be painted to resist corrosion when exterior installation is required.

2.10 LOCAL ALARM COMPONENTS

A. Exterior Alarm Bell

1. Furnish 10" diameter, UL/FM approved bell with identification sign, rated 120VAC, with standard mounting hardware.
2. Locate as shown on approved plans.

B. Water Flow Switch

1. Provide UL/FM approved, 120VAC with two sets of Form C, single pole, double throw contacts, and adjustable retard feature.
2. Retard shall be set by Contractor so as to prevent false alarms, and still allow audible alarm within 30 seconds.

2.11 CENTRAL STATION SUPERVISION

A. General

1. Furnish supervision at all valves controlling fire protection water supplies, and any required underground conduit thereto.
2. Provide UL/FM approved tamper switch, Model PCVS-1, or OSYSU-1, or UL/FM listed equivalent, 120VAC with one set of Form C, single-pole, double-throw contacts.

2.12 FIRE DEPARTMENT CONNECTION

A. Provide 4 " x 2 ½", single or double clapper 2-way fire department connection. Finish and model shall be as required by serving fire department. Provide check valve per Section 2.14B.

2.13 VALVE COMPONENTS

A. Control Valve
1. Provide iron, double disc, bronze-mounted gate valve, with adjustable indicator post.
2. Post shall be compatible with valve, and be field painted as required by serving fire department.

B. Backflow Prevention and Check Valves
1. Check valves shall be iron body, bronze mounted, horizontal swing check. As acceptable to authorities having jurisdiction, iron body, bronze, disk wafer check may be used.
2. Check valve shall be U.L/FM approved for fire protection use, and recommended by the manufacturer for direct bury where such installation is to be required.
3. Iron body, bronze disk threaded or grooved swing check may be installed at Fire Department Connection, and located as acceptable to serving fire department.

C. Interior Drain/Test Valves

1. Furnish listed combination test and drain valve at riser, as shown on the approved plans. Provide pressure relief type, with bypass.
2. Where auxiliary drainage is required, provide brass, rubber disc, angle or globe pattern, with screwed ends, rated 200psi WOG.

2.14 VALVE CHART

A. Provide chart in enclosed frame, indicating all valve locations functions.

2.15 UNDERGROUND PIPE AND FITTINGS

A. General
1. All pipe and fittings shall be new, acceptable to authorities having jurisdiction, comply with all applicable standards and codes, and free from damage and distortion.

B. Product Characteristics
1. Pipe shall be cast or ductile iron, or C-900 PVC, as shown on plans or required by water department. Pipe under structural footings shall be cast or ductile iron only, to at least 5'-0" beyond outside face of building.
2. Fittings shall be ductile iron, class 250, flanged or mechanical joints as required. Proper thrust restraint shall be provided per NFPA 24.
3. All hardware installed below-grade, including studs, bolts, nuts, washers, thrust-restraint rods, etc. shall be stainless steel conforming to UNS 31600 (formerly AISI Type 316). Hex-head bolts shall conform to ASTM F593, Alloy Group 2, Condition CW1/CW2 (depending on size). Hex nuts shall conform to ASTM F594, Alloy Group 2, Condition CW1/CW2 (depending on size). T-bolts shall be stamped to show conformance with UNS 31600.

PART 3 - EXECUTION

3.1 JOB SITE CONDITIONS

A. Inspection

1. Prior to all work of this section carefully inspect the installed work of other sections, and verify that all such work is complete to the point where this portion of the work may properly commence in accordance with all submittals, designs, and applicable codes.

B. Discrepancies

1. In the event of a discrepancy, immediately notify the Architect. Do not proceed with installation in areas of discrepancy until all such discrepancies and/or omissions have been fully reviewed and clarified.

3.2 FABRICATION

A. General

1. All pipe, fittings, and materials shall be prepared by qualified personnel, trained and experienced with the products involved, and the recommended methods of preparation.
2. All pipe cuts, threads, and grooves shall be made according to applicable codes, standards and accepted good practices.
3. Pipe shall be free of damage, flaws and burrs. Threads and grooves shall not be excessively shallow or deep.
4. Fittings shall be made onto the pipe no tighter than necessary. Cracked or broken fittings shall be replaced, without exception.
5. Excess dope and oils shall be removed before shipment to job site.

B. Welding

1. Welding methods shall comply with NFPA 13 and AWS B2.1. Contractor shall be responsible for all welded joints and any qualifying procedures for welders and related personnel.
2. Holes in pipe for outlets shall be cut to full inside diameter of fitting, prior to welding in place. Holes shall be free of slag and welding residue and of smooth bore. Fittings shall not penetrate internal diameter of run piping. Holes shall be cut by hole-saw or other rotary bit. Torch-cutting of holes is prohibited.

3.3 INSTALLATION

A. General

1. All installations shall be per referenced standards. Follow manufacturer's directions and recommendations in all cases as required for all approvals and warranty enforcement.
2. All cutting of structure shall be subject to approval by the Architect. Beams, decks and other structural components shall not be cut or altered in any way unless previously approved.

3. Provide flexible couplings where required to provide expansion capability, and for earthquake protection per NFPA 13. Provide sway bracing as required by coupling locations.
4. Entire sprinkler system shall be installed in such a manner so that it can be drained in accordance with NFPA 13. Drains shall be located at suitable points as approved by Architect. No primary or auxiliary drain shall be located in any public area or electrical room. All drains shall discharge into dedicated receptors.
5. No work shall be covered or enclosed until inspected, tested, and approved by Architect and/or authority having jurisdiction. Should any work be concealed before inspection, the Contractor shall, at Contractor's expense, uncover such work and after it has been inspected, tested and approved, provide for all repairs as may be necessary to restore work to original and proper condition.
6. Sprinklers at finished ceilings and in exposed locations shall form a symmetrical pattern and shall be located at the exact centerline of 2’ square ceiling tiles and “Second Look” tile modules. Where 2’ x 4’ ceilings occur, sprinklers shall be centered in the 2’ direction with escutcheons at least 6” clear of ceiling T-bars.
7. Sprinkler layout shall accommodate lighting and HVAC register locations. Coordination with the work of these sections is the responsibility of Contractor.
8. Without exception, no piping shall be run under or through any skylight or skylight well. Any additional upright or pendent sprinklers, which may be required by skylight locations, shall be the responsibility of this contractor.
9. All penetrations of wall and floor assemblies shall be suitably sleeved, patched and/or sealed in order to preserve fire rating, where applicable.
10. Location of control valves, fire department connection, and inspector's test shall be as required by authorities having jurisdiction, and as approved by Architect.
11. Local alarm bells shall be located so as to be easily heard and seen by passersby and fire department personnel. Locate on exterior wall, 10’-0” – 12’-0” above finished grade.
12. Provide wood or metal floor pans under and around pipe cutting/threading machines to protect floor surfaces from damage and discoloration.
13. Paint all fire sprinkler piping risers, drops and other components exposed to view in final construction as directed by Architect and per Section 09 91 23.
14. Underground pipe and fittings shall be installed per NFPA 24, and applicable local codes and standards. Trenching, back-filling, depth of bury and size, shape and location of all thrust blocks shall be acceptable to all jurisdictional agencies.

3.4 FIELD QUALITY CONTROL

A. Testing

1. Perform all tests as required by NFPA 13, and all authorities having jurisdiction. Maintain an accurate record of all tests and inspections on the job site, including date of test and inspecting agency.
2. Before connection of interior system to underground main, underground piping shall be hydrostatically tested, flushed and accepted by authorities having jurisdiction. Provide documentation of acceptance by jurisdictional authority. All required health and bacterial tests shall be the responsibility of Contractor.

3.5 COMPLETION

A. Closeout

1. Upon completion and approval of system, and prior to occupancy, provide instruction to the Owner, or Owner's representative, in all details of system operation and maintenance. Prepare and submit maintenance and operation manual per other sections of specifications as applicable.

2. Provide three copies of final inspection and certification as prescribed by Owner's Insurance Underwriter, and other authorities having jurisdiction.
3. Provide three (3) copies of system "As-Built" drawings to the Owner or Owner's representative. Drawings shall show actual installation details including all piping and equipment locations, room or facilities modifications, etc. One (1) copy of drawings shall be on reproducible type media.
4. Furnish fully executed NFPA Materials and Test Certificate to Owner or Owner's representative, local fire authority, architect and to DSA.
5. Submit two copies of guarantee per Section 01 78 30.

B. Clean Up

1. Equipment, appurtenances, fixtures and exposed piping shall be clean, and all excess dope and oil shall be removed. Sprinkler heads shall be cleaned without the use of any solvents.
2. Upon completion of work, remove all surplus material, debris, and equipment associated with or used in the execution of this work. Sweep work and storage areas, as required, to remove metal shavings and oily residue.

END OF SECTION

SECTION 22 05 00
GENERAL PLUMBING REQUIREMENTS

PART 1 GENERAL

1.01 SECTION INCLUDES

A. Division 1 - General Requirements, insofar as it is applicable to Division 22 Sections, and unless otherwise hereinafter specified.

B. All material, equipment and labor required to furnish and install the Plumbing shown on the Drawings and/or hereinafter specified, and otherwise hereinafter specified, shall be complete, tested and ready for use.

C. Maintenance of continuity to all existing utilities, except for short designated intervals during which connections are to be made. Shut-down time of the existing utilities shall be at a time convenient and agreeable to the Owner. The Contractor shall be responsible for any utility service interruptions and shall repair any damages caused by his operation.

D. Work under Division 23 specified in the following Sections:

1. Section 23 05 00, General Plumbing Requirements.

2. Section 23 05 10, General Plumbing Materials.

3. Section 22 40 00, Plumbing Fixtures and Equipment.

4. Section 22 70 00, Plumbing Systems.

1.02 RELATED WORK SPECIFIED ELSEWHERE

A. Yard Storm Drainage.

B. Sheet Metal Gutters and Sheet Metal Downspouts.

C. Soap Dispensers.

D. Equipment Platforms.

E. Concrete Work.

F. Patching.

G. Painting except as hereinafter specified.

H. Electrical Work except as hereinafter specified.

I. Division 13 Swimming Pool Mechanical

J. Equipment furnished by the Owner or under other Sections, except that plumbing roughing-in and connections for the equipment shall be made under Division 22 Sections.

1.03 PERMITS AND FEES

A. Unless otherwise hereinafter specified, the Contractor shall apply and pay for all necessary permits, fees, charges and inspections required by any public authority having jurisdiction; any expense incurred is part of this Contract.

B. All excavation, backfilling and repaving in connection with work under Division 22 Sections in public property is part of this Contract and shall be done as directed by the authority having

jurisdiction.

1.04 LOCATION AND ACCESSIBILITY

A. The Contractor shall fully inform himself regarding any and all peculiarities and limitations of the spaces available for the installation of all work under Division 22 Sections. The Drawings indicate the desired location and arrangement of piping and equipment and are to be followed as closely as possible. The Contractor shall not fabricate any piping and until he has verified in the field that the shown and/or specified piping and equipment can be installed in the allocated space without causing any restrictions in the required access or clearance to the piping and equipment and/or any other equipment furnished and installed under other Divisions.

B. The Contractor shall install the piping and equipment with adequate clearance around, above and below the piping and equipment as defined by the governing codes and as required for proper maintenance and servicing.

1.05 CODES AND REGULATIONS

A. All work provided under Division 22 Sections shall comply with the following Titles of the California Code of Regulations (CCR).

1. Title 19, Public Safety.

2. Title 8, Industrial Relations.

3. Title 24, Building Standards, including Administrative Regulations.

4. State Building Code (2018 International Building Code with 2019 California State Amendments), 2019 California Building Code.

5. State Electrical Code (2017 National Electrical Code with 2019 California State Amendments). 2019 California Electrical Code.

6. State Mechanical Code (2018 Uniform Mechanical Code with 2019 California State Amendments), 2019 California Mechanical Code.

7. State Plumbing Code (2018 Uniform Plumbing Code with 2019 CPC California State Amendments, 2019 California Plumbing Code)

B. In addition, all work provided under Division 22 Sections, shall comply with other applicable codes and regulations.

C. When the Drawings or Specifications call for sizes or grades different than required by the governing codes and regulations, the Contractor shall provide and install the larger size or higher grade. Nothing on the Drawings or in these Specifications is to be construed to permit work in violation of the governing codes and regulations.

1.06 SUBSTITUTIONS

A. Unless otherwise directed in Division 1, specific reference to materials and equipment by name and catalog number shall be interpreted as establishing a standard of quality and shall deemed to be followed by the words "or equal". The Contractor may offer any material and equipment which he believes to be

equal to that so specified.

B. Should the Contractor desire to substitute any material, equipment or other items for those specified, he shall submit a complete list, including detailed equipment layouts within ten (10) calendar days after the scheduled Start of Construction. Said data shall be submitted in seven (4) copies, assembled in individual brochures.

C. Any changes required by the furnishing and installation of substituted material, equipment and other items shall be arranged for and paid for by the Contractor; any expense incurred is part of this Contract.

D. Should the Contractor neglect to submit the data within the specified time limit, or should the Architect reject the submitted items and the Contractor fail to resubmit other data complying in the Architect's opinion with the Contract Documents within ten (10) calendar days, items then shall be furnished in strict accordance with the detailed Specifications and drawings.

1.07 EQUIVALENT EQUIPMENT

A. In addition to detailed specifications of materials and equipment, the Specifications make reference to "equivalent equipment", which is not to be construed as a substitution.

B. Should the Contractor desire to use any "equivalent equipment", he shall submit complete data, including detailed layouts within ten (10) calendar days after the scheduled Start of Construction. Said data shall be submitted in seven (4) copies, assembled in individual brochures.

C. "Equivalent equipment" will be considered as complying with the Contract documents if the quality, features, performance, physical shape and appearance of the "equivalent equipment" are in the Architect's opinion the same or similar to those of the material and equipment described in detailed Specifications.

D. Any changes required by the furnishing and installation of "equivalent equipment" shall be arranged for and paid for by the Contractor; any expense incurred is part of the Contract.

E. Should the Contractor neglect to submit said data within the specified time limit, items shall be furnished in strict accordance with the detailed Specifications and drawings.

1.08 SUBMITTALS

A. Unless otherwise indicated in Division 1, within fourteen (14) calendar days after the scheduled Start of Construction, the Contractor shall submit complete data as hereinafter specified. Said data, digitally assembled, shall be submitted in electronic pdf format, along with one (1) bound hard copy. Each item shall be identified by the paragraph number and page number as shown in the Specifications.

B. Should corrections be necessary, the Contractor shall resubmit within fourteen (14) calendar days after the submittals are returned by the Architect.

C. All submittals shall be reviewed prior to start of work.

D. Review of submitted items by the Architect for compliance with the Contract Documents shall not relieve the Contractor of the

responsibility for any deviations from the Drawings or Specifications, unless he has in writing specifically called attention to such deviations at the time of submission, not shall it relieve him of responsibility for errors of any sort in such submittals.

E. All materials lists by no later than 5 days post approved submittals and four (4) copies.

1.09 MATERIALS, EQUIPMENT, WORKMANSHIP AND JUDGMENT

A. Unless otherwise hereinafter specified, all materials and equipment furnished and installed under Division 22 Sections shall be new, of best grade and the latest products as listed in the latest printed catalog.

B. All material and equipment of the same type and/or class shall be standard product of the same manufacturer.

C. Workmanship shall be of the best quality and only competent mechanics skilled in their trades shall be employed. The Contractor shall furnish the services of an experienced superintendent, who will be constantly in charge of the installation of the work until formal completion of work.

D. Whenever the words "or equal", "equivalent equipment", "suitable", "as directed" or other words of similar intent or meaning are used, implying that judgment is to be exercised, it is understood that it is the judgment of the Architect that is referred to.

E. The Architect shall have the right to interpret compliance of material, equipment and/or workmanship with the Contract documents.

1.10 DRAWINGS AND SPECIFICATIONS

A. Drawings and specifications are deemed to be complementary.

B. In case of discrepancy between the Drawings and the Specifications, the Contractor shall provide the more expensive alternate unless he has obtained a written clarification prior to bid opening.

C. Anything shown on the Drawings and not mentioned in the Specifications, or mentioned in the Specifications and not shown on the Drawings, shall be deemed to have been mentioned in both.

D. Should the material and equipment shown on the Drawings not be specified by name, model number and description, the Contractor shall provide such material and equipment in accordance with the Architect's selection unless he has obtained a written clarification prior to bid opening.

E. All shop drawings by no later than 30 calendar days after Notice to Proceed,(4) four copies, unless authorized officially by District wet signature for additional time.

1.11 MANUFACTURER'S DIRECTIONS

A. If the manufacturers of equipment furnished and installed under Division 22 Sections furnish directions covering points not shown on the Drawings or herein specified, such directions shall be followed.

1.12 COOPERATION WITH OTHER TRADES

A. The work under Division 22 Sections shall be coordinated with the work of the other trades toward the general purpose of having the construction progress as rapidly and as smoothly as possible with a minimum of interference between one trade and another.

1.13 OPENINGS, SUPPORTS, CUTTING AND CORING

A. The Contractor shall provide all openings, supports, cutting and coring which may be required for the installation of the work under Division 22 Sections. Where pipes are to pass through or interfere with any structural member, or where notching, boring or cutting of the structure is necessary, the work shall be done as directed by the Architect. Top plates in bearing partitions shall not be cut or notched.

B. Patching is not part of Division 22 Sections.

1.14 CLOSING-IN OF UNINSPECTED WORK

A. The Contractor shall not allow or cause any of the work to be covered up or enclosed until it has been tested by the Contractor, and reviewed and found by the Architect to comply with the Contract documents. Should any work be enclosed or covered up before such test and review, the Contractor shall, at his own expense, uncover the work for such test and review, make all repairs as may be necessary to restore all his work and that of other trades to its original and proper condition.

1.15 SAFETY

A. The Contractor shall be solely and completely responsible for the condition of the premises on which the work is performed and for safety of all persons and property on the site during the construction. This requirement shall not be limited to normal working hours but shall apply continuously.

B. The Contractor shall comply with all governing safety regulations.

1.16 DAMAGE BY LEAKS

A. The Contractor shall be responsible for all damages to any part of the premises caused by leaks or breaks in pipes, fixtures or equipment furnished and installed under Division 22 Sections for a period of one year from the date of formal acceptance of work by the Owner.

1.17 RECORD DRAWINGS

A. At the beginning of the project, the Architect will furnish the Contractor one blue-line print and one reproducible transparency of each applicable drawing. Contractor shall keep an accurate dimensioned record of the as-built locations and elevations of all buried lines, manholes, cleanouts, valves, plugged tees, capped ends and of all work which is installed differently from that shown on the Drawings. This record shall be kept-to-date on the blue-line print as the job progresses and shall be available for review at the construction site at all times.

B. Before formal acceptance of the work, this information shall be transferred by the Contractor in a neat, legible, reproducible manner to the transparency, shall be stamped, dated and signed by the installing Contractor, shall be signed by the Inspector and

shall be delivered to the Architect unfolded. If, in the opinion of the Architect, the record is not legible, the Contractor shall employ a satisfactory draftsman to properly perform this work.

1.18 ELECTRICAL WORK

A. Unless otherwise noted or hereinafter specified, all automatic electric controls connected with the work of Division 22 Sections shall be furnished and installed under Division 22 Sections. Automatic electric controls include such items as temperature controllers, aquastats and electrically operated valves.

B. Unless otherwise noted or hereinafter specified, conduits, conductors, program clocks, all-electric relays and miscellaneous wiring devices for both line and low voltage control circuits will be furnished and installed under Division 26 Sections.

C. Unless otherwise hereinafter specified, final connections of all automatic electric controls will be made under the Division 26 Sections under the supervision furnished under Division 22 Sections.

D. Electric motors and power driven equipment connected with the work of Division 22 Sections shall be furnished and installed under Division 22 Sections.

E. Work in connection with power circuits, including conduits, conductors, outlets, disconnect switches, motor starters, miscellaneous wiring devices and making of final connections will be done under Division 26 Sections.

1.19 EXCAVATION AND BACKFILLING

A. The Contractor shall do all necessary excavation, shoring and backfilling required for the proper installation of buried pipe lines and related material and equipment.

B. Temporary barricades, warning lights, covers, railings and other protection or warning devices shall be maintained by the Contractor while the trenches are open.

C. Piping installation and trench backfilling shall be done promptly after the trenching has been completed in order to keep the trenches open as short a time as possible; however, no backfilling will be permitted until the piping installation has been reviewed by the Architect for compliance with the Contract documents.

D. The Contractor shall exercise utmost care while trenching for plumbing utility lines. Existing underground lines might not be where shown and additional unknown plumbing, heating and electrical lines might be encountered. If location of existing utilities is not precisely known, hand trenching shall be considered. The Contractor shall be responsible for repair and/or replacement of all piping, conduits and appurtenances damaged by his action.

E. All sidewalks, driveways or other concrete or asphalt surfaces which are damaged during excavation shall be repaired to match the adjacent existing work in material and finish at the Contractor's expense.

F. All plants and turf that occur in the area of the excavation shall be carefully removed and placed where they will not be damaged. After the excavations are filled, the plants and turf shall be replaced as directed by the Architect.

1.20 CLEANING OF MATERIAL AND EQUIPMENT

A. All installed material and equipment shall be thoroughly cleaned. Material and equipment which is to be painted shall be cleaned of cement, plaster, grease, oil and other foreign substances. All pasted paper labels shall be removed.

1.21 CLEAN-UP

A. Upon completion of the work, the Contractor shall remove from the premises all surplus material, rubbish and debris resulting from his operation. The premises shall be left in a clean and neat condition.

1.22 GUARANTEE

A. In addition to the guarantees required in the General Conditions, all materials and equipment furnished and/or installed under Division 22 Sections shall be guaranteed for a period of one year from the date of formal acceptance of the work by the Owner. Should any trouble develop during this period due to defective materials or faulty workmanship, the Contractor shall furnish all necessary labor and materials to correct the trouble without any additional cost to the Owner. Any defective materials or inferior workmanship noticed at the time of installation and/or during the guarantee period shall be corrected immediately to the satisfaction of the Owner and the Architect. Plumbing contractors shall respond to a service call request during guarantee period, within forty-eight (48) hours during a regular working week.

1.23 SUMMARY OF SUBMITTALS

A. The following items shall be submitted to the Architect per timeline outlined in Division 1 after the scheduled Start of Construction for review for compliance with the Contract Documents.

1. Complete data of proposed substitutions.

2. Complete data of "equivalent equipment".

3. Plumbing fixture brochures (with trim).

4. Water Heater performance data.

5. Pump performance data.

6. Control diagrams.

B The following items shall be submitted to the Architect prior to formal acceptance of the work by the Owner:

1. Yard Plumbing record drawings.

2. Water sterilization certificate.

3. Plumbing guarantee.

PART 2 PRODUCTS

(NOT APPLICABLE)

PART 3 EXECUTION

(NOT APPLICABLE)

END OF SECTION

SECTION 22 05 10
GENERAL PLUMBING MATERIALS

PART 1 GENERAL

1.01 SECTION INCLUDES

A. Section 22 05 00, General Plumbing Requirements, insofar as it is applicable to this Section and unless otherwise herein specified.

PART 2 PRODUCTS

2.01 PIPING

A. Piping shall be of materials and grades hereinafter specified in the following Sections:

1. Section 22 40 00, Plumbing Fixtures and Equipment.

2. Section 22 70 00, Plumbing Systems.

2.02 PIPE JOINTS

A. Screwed Steel Pipe Joints

1. Pipe Joint Compound: Hercules "Pro-Dope", lead-free.

2. Cleanout Plug Compound: Hercules "Pro-Dope", lead-free.

B. Flanged Steel Pipe Joints: Garlock 7797, 1/16" thick, 250 °F neoprene gasket.

C. Soldered Copper Pipe Joints

D. Piping Buried Under Buildings: Harris "Stay-Silv 5" brazing alloy with 5% silver, 89% copper and 6% phosphorous.

1. All Other Piping: Engelhard "Silvabrite 100" lead-free solder with 95.5% tin, 4% copper and .5% silver.

E. Polyvinyl Chloride Pipe Joints

1. Plain End Pipe Primer: Weld-On P-70 (purple color).

2. Plain End Pipe Compound: Weld-On P-711 (gray color).

3. Screwed Pipe Compound: Teflon tape.

4. Primer and compounds shall be N.S.F. and I.A.P.M.O. listed.

2.03 UNIONS

A. Steel Piping, 2" and Smaller: Stockham 794, 250# screwed malleable iron union with bronze to iron ground joint, galvanized or black to match the piping specifications.

B. Steel piping, 2-1/2" and Larger: 125# screwed cast iron companion flanges, galvanized or black to match the piping specifications.

C. Copper Piping, 2" and Smaller: Mueller C-107, 150# soldered cast brass union with ground joint.

D. Copper Piping, 2-1/2" and Larger: 125# soldered cast brass companion flanges.

2.04 DIELECTRIC UNIONS

A. 1-1/2" and Smaller: EPCO Type PXS, 250#, 200 °F brass screwed to

copper solder joint with No. 2 gasket.

B. 2" and Larger: PSI Standard "Gask-O-Seal", Type E, 150#, 180 °F insulation flange set with polyethylene one-piece sleeve and washer; set installed between 125# soldered cast brass flange and 125# screwed cast brass flange.

C. Dielectric unions shall be provided at all connections of copper piping and ferrous (steel, iron piping).

2.05 PIPE HANGERS, SUPPORTS AND ATTACHMENTS

A. Rod Pipe Hangers: Tolco Fig. 1 adjustable steel clevis hanger with Fig. 100 threaded rod and lock nuts, suspended from pipe hanger attachment. At Contractor's option, hanger may be Tolco Fig. 3 J-hanger with Fig. 100 threaded rod and lock nuts, suspended from pipe hanger attachment.

B. Trapeze Pipe Hangers: Tolco Tolstrut Fig. RIGD galvanized pipe clamps inserted in Fig. A-12P 12 gauge 1-5/8" x 1-5/8" galvanized channel with 9/16" bolt holes, two Fig. 100 1/2" threaded rods with lock nuts; channel suspended from pipe hanger attachment.

C. Pipe Hanger Attachment, Wood Construction

1. Pipe, 2" and Smaller: Tolco Fig. 50 steel angle bracket, fastened with 3/8" bolt and nut with washer at both ends.

2. 2-1/2" through 6": Tolco Fig. 50 steel angle bracket, fastened with 1/2" bolt and nut with washers at both ends.

3. 38" Pipe: Tolco Fig. 50 steel angle bracket, fastened with 5/8" bolt and nut with washer at both ends.

D. Pipe Hanger Attachment, Steel Construction: Tolco Fig. 64 beam C-clamp with lock nut and Fig. 69 retaining strap with lock nut installed under strap.

E. Wall Pipe Support: Tolco Tolstrut Fig. RIGD galvanized pipe clamps inserted in Fig. A-12P 12 gauge 1-5/8" x 1-5/8" galvanized channel with 9/16" bolt holes. In wood construction, channel shall be fastened with two 1/2" bolts and nuts with washers at both ends. In masonry and concrete construction, channel shall be fastened with two Phillips "Red Head" JS-12C 1/2" steel stud anchors with nuts and washers; concrete fill shall be used in hollow block walls at stud anchors.

F. Vertical Pipe Risers at Floor Levels: Tolco Fig. 6 riser clamp.

G. Roof Pipe Support: Tolco Tolstrut Fig. RIGD galvanized pipe clamp inserted in Fig. A-12P 12 gauge 1-5/8" x 1-5/8" galvanized channel with 9/16" bolt holes. Channel shall be fastened to a 4" x 4" redwood sleeper with two galvanized 1/2" x 2-1/2"lag screws with washers. Sleeper shall be attached to the roof with Henry 204 non-hardening, non-running plastic roof cement; after installation, the sleeper and the adjoining roof shall be covered with Henry 181 fiberglass reinforcing fabric, saturated with Henry 204 roof cement.

H. Equivalent: Secur Strut, Superstrut.

I. See details on plans for additional information.

2.06 STRAINERS

A. Strainers shall be Y type with semi-steel body and stainless steel screen with perforations to suit service requirements. Strainers shall be pipe size.

B. 2" and Smaller: Metraflex SM Series, 250# screwed body with screwed cap.

C. 2-1/2" and Larger: Metraflex TF Series, 125# flanged body with flanged gasketed cap.

D. Strainers shall be provided with Chicago 293-LF 1/2" brass body blow-off hose bibb with 3/4" hose end.

E. Equivalent: Mueller, Watts.

2.07 PIPE SLEEVES

A. Sleeves shall be provided for all piping passing through foundations, walls and floors; however, sleeves are not required for sewer piping passing through concrete floors on grade.

B. Sleeves shall be provided also under walks, covered passages and elsewhere as indicated or required by local codes.

C. Foundation Wall Sleeves

1. Sleeves shall be Schedule 40 polyvinyl chloride pipe with square cut ends flush with wall surfaces.

2. Sleeves shall have the inside diameter 2 in. larger than the outside diameter of the passing pipe or insulated pipe.

3. Where wall penetration is required to be watertight to prevent seepage, sleeves shall be Smith 1720-C Series cast iron sleeves with flashing device and underdeck clamp; sleeves shall be packed with tarred oakum and 1 in. deep caulking lead.

D. Floor Sleeves Above Ground

1. Sleeves shall be R.K. Industries 24 gauge galvanized sheet metal assemblies with telescopic sleeves and square base plates.

2. Sleeves shall have the inside diameter 1 in. larger than the outside diameter of the passing pipe or insulated pipe.

3. For fire rated floors the annular sleeve space shall be filled at each end with 1" thick 3M Model CP-25 U.L. Listed caulking (SFM listing 4060-941:101). Caulking shall be protected at the underside with cast brass split flange escutcheon with set screw.

4. For fire rated floors and polypropylene piping, the floor penetration shall be as hereinafter specified in Section 22 70 00.

E. Wall Sleeves

1. Sleeves shall be R. K. Industries 24 gauge galvanized sheet metal assemblies with telescopic sleeves and square base plates.

2. Sleeves shall have the inside diameter 1 in. larger than the outside diameter of the passing pipe or insulated pipe.

3. For soundproof walls, the annular sleeve space shall be packed with 3/4 lb./cft. density fiberglass insulation concealed at both sides of the wall with cast brass split flange escutcheons with set screw.

4. For fire rated walls, the annular sleeve space shall be

filled at each end with 1" thick 3M Model CP-25 U.L. listed caulking (SFM listing 4485-941:100). Caulking shall be protected at both sides of the wall with cast brass split flange escutcheons with set screw.

5. For fire rated walls and laboratory polypropylene piping, the wall penetration shall be as hereinafter specified in Section 22 70 00.

F. Roof Sleeves

1. Sleeves shall be R.K. Industries 24 gauge galvanized sheet metal assemblies with telescopic sleeves and square base plates.

2. Sleeves shall have the inside diameter 1 in. larger than the outside diameter of the passing pipe or insulated pipe.

3. Sleeves shall be used for fire rated roofs only with the annular space filled at each end with 1" thick 3M Model CP-25N/S U.L. listed caulking (SFM listing 4485-941:101). Caulking shall be protected at the underside with cast brass split flange escutcheon with set screw.

2.08 BURIED PIPE WRAPPING

A. All copper and steel pipe for installation below ground shall be shop wrapped.

B. Prior to wrapping, pipe shall be cleaned with a non-oily solvent and then cleaned thoroughly with a wire brush.

C. After cleaning, pipe shall be spirally wrapped with 2" wide 20 mils thick Manville Trantex VID-20 polyvinyl chloride pressure sensitive tape with 1/2" lap without wrinkles.

D. All fittings and field joints in buried copper and steel piping shall be wrapped. Prior to wrapping, fittings and field joints shall be washed with a non-oily solvent and then cleaned with a wire brush. After cleaning, fittings and field joints shall be coated and wrapped as follows:

1. Coat of Koppers "Jet-Set" coal tap primer, applied uniformly to dry surface.

2. Two layers of 2" wide 35 mils thick Polyken 931 black butyl rubber molding tape with 1" lap, covered with one layer of 3/4" wide 15 mils thick Polyken 930 black polyethylene pressure sensitive tape with 1/4" lap.

3. Field wrapping shall extend 3 in. over undisturbed shop applied pipe coating.

E. Cast Iron soil pipe and fittings located below grade shall be encased in water tight 8-mil polyethylene tape. Provide clean sand backfill to a depth of 6” in all directions. Provide bonding at all non-conductive joints for electrical continuity.

2.09 ACCESS BOXES

A. Brooks 3-RT open bottom concrete box with cast iron frame and cover with the name of the service cast in cover.

B. Equivalent: Christy.

2.10 ACCESS PANELS

A. Fire Rated Panels: Elmdor FR-CL Series U.L. Listed 1-1/2 hr. prime coat finished steel access panel with 16 gauge frame with wall

flange and 16 gauge hinged door with positive spring closer and cylinder lock.

B. Non-Rated Panels

1. Tile and Terrazzo Walls: Elmdor DW-SS-AKL Series stainless steel access panel with 16 gauge frame with wall flange and 16 gauge hinged door with Allen key lock.

2. Walls without Tile and Terrazzo: Elmdor DW-AKL Series prime coat finished steel access panel with 16 gauge frame with wall flange and 16 gauge hinged door with Allen key lock.

3. Ceilings: Elmdor DW-AKL Series prime coat finished steel access panel with 16 gauge frame with wall flange and 16 gauge hinged door with Allen key lock.

C. Equivalent: Milcor, Karp.

D. Access panels shall be of adequate size for the intended purpose, but in any case not less than 12" x 12" size.

E. Access doors shall match the wall or ceiling finish and fire rating as indicated on the Architectural drawings. 16-gauge steel frame and door with paintable finish, except in restrooms where doors shall be stainless steel with satin finish.

PART 3 - EXECUTION

3.01 PIPING INSTALLATION

A. A union shall be installed on one side of each screwed valve, at all connections to automatic valves, at equipment connections and elsewhere as indicated or required.

B. Dielectric unions shall be provided at all connections of copper piping and ferrous (steel, iron) piping.

C. Piping shall be seismically braced in accordance with the Guidelines for Seismic Restraints of Mechanical Systems and Plumbing Piping Systems published by S.M.A.C.N.A. and P.P.I.C., and approved by the District of the State Architect, Structural Safety Section. Prior to Start of Construction, the Contractor shall provide a new copy of the Seismic Guidelines to the Inspector for use during the construction.

D. Unless otherwise indicated, piping shall be firmly held in place by specified hangers and supports.

E. Unless otherwise hereinafter specified, piping 1-1/4" and larger shall be supported every 10 ft. and piping 1" and smaller shall be supported every 8 ft.

F. Branches with lengths in excess of 6 ft. shall have separate hangers and supports.

G. Powder actuated tools shall not be used.

H. Steel construction fireproofing damaged by the pipe hanger attachment installation shall be repaired to the satisfaction of the Architect.

I. Pipe lines shall be constructed of full length sections of specified pipe except where length of run is less than full pipe length.

J. Pipe runs shall be straight and true and piping shall be installed in such a manner as to prevent any undue strain on piping or the equipment and as to prevent any unusual noise at normal flow.

K. Cut pipe ends shall be thoroughly reamed to remove all burrs.

L. Pipe runs and connections shall be made so as to insure unrestricted flow and prevention of air pockets.

M. Unless otherwise indicated or required, piping shall be concealed in finished portions of the buildings.

N. Unless otherwise hereinafter specified, polished chrome plated cast brass hinged split flanged escutcheons with set screw shall be provided at all points where pipes pierce finished surfaces.

O. Unless specifically permitted by the Structural Engineer, piping shall clear beams, columns and other structural members.

P. Plated, polished or enameled connections to equipment shall not show tool marks or threads and shall be supported by neat plated hangers and supports.

Q. Piping shall be capped or plugged to exclude dirt until final connections are made.

R. Pipe size reductions shall be made with reducing fittings. Welding saddles and welding nipples may be used for branch lines at least two pipe sizes smaller than the pipe run; for a cross configuration, the branch lines must be at least three pipe sizes smaller than the pipe run.

S. Close nipples, bushings, street elbows and bullheaded tees shall not be used.

T. Except where valve location makes their use obvious, all valves shall be labeled with securely attached 2 in. diameter metal or plastic tags.

U. Pipe welding shall be performed by a certified welder; certificate shall be issued by a laboratory acceptable to the Architect.

V. Concrete floors, concrete walls and masonry walls shall be cored.

3.02 TRENCHING AND BACKFILLING

A. Concrete paving shall be cut with saw.

B. Trench excavation shall be as follows:

1. Trenches shall be not less than 12 in. wider than the outside diameter of the pipe.

2. Bottom of trenches shall be excavated to a depth of 6 in. below the bottom of the piping, and the space shall be filled with 6 in. deep layer of clean sand which shall be well tamped.

3. Upon installation of the piping, the pipe shall be covered with 12 in. deep layer of clean sand which shall be well tamped.

4. Should it be required to lay pipe and fill, the fill shall be first compacted as hereinafter specified for backfilling.

C. Trench backfilling shall be as follows:

1. Only clean, well pulverized and non-expansive earth shall be used for backfilling; earth may contain rocks with 1/2 in. maximum dimension.

2. Trenches shall be backfilled in 6 in. deep layers of earth,

which shall be moistened and mechanically tamped to obtain 90% dry density compaction.

3. Trench flooding shall not be used.

3.03 GENERAL INSTALLATION

A. Unless otherwise indicated, access boxes shall be provided for all valves located below grade. Where necessary, access boxes shall be provided with metal or concrete extensions for added depth.

B. Access boxes shall be set flush with finished grade.

C. Access panels shall be provided for all concealed mechanical material and equipment which requires periodic maintenance, adjustment or inspection, such as valves, control boxes and controls; in addition, access panels shall be provided for all concealed water hammer arresters and trap primers. All access doors must provide easy access to equipment, capable of unobstructed opening to 180-swing. Access for passage must be a minimum of 30"x30".

3.04 EQUIPMENT ANCHORING

A. All mechanical equipment shall be anchored.

B. Anchorage shall comply with California Code of Regulations (CCR), Title 24, 2019 California Building Code.

3.05 TESTS

A. Tests shall be performed by the Contractor to the satisfaction of the Architect. Tests shall be made in the presence of, and at a time suitable to, the Architect. The tests shall be as hereinafter specified.

B. The Contractor shall furnish all necessary material, equipment and labor required for the tests. Cost of tests, replacement of faulty parts and/or expenses involved in damages resulting from the tests are part of this Contract.

C. Hydrostatic tests shall be made by completely filling the piping system with water and eliminating all accumulations of air so that leakage, no matter how small, will be apparent on the test gauge. Pressure shall be maintained until all piping has been examined, but in any case not less than one hour.

END OF SECTION

SECTION 22 40 00
PLUMBING FIXTURES

PART 1 – GENERAL

1.01 SECTION INCLUDES

A. Section 22 05 00, General Plumbing Requirements, and Section 22 05 10, General Plumbing Materials, insofar as they are applicable to this Section, and unless otherwise herein specified.

B. Materials, fixtures, equipment and labor as herein specified which shall take precedence over those elsewhere specified.

C. Plumbing fixtures and equipment consisting of fixtures, equipment, trim and accessories.

1.02 PLUMBING FIXTURE BROCHURES

A. Within thirty-five (35) calendar days after the Scheduled Start of Construction, the Contractor shall submit to the Architect seven (7) copies of plumbing fixture brochures with full description, cuts and catalog numbers of fixtures, equipment, trim and accessories the Contractor proposes to use.

B. Plumbing fixture brochures shall be arranged in the order of the Specifications and shall include the Architect's plumbing fixture identification code for each fixture and equipment.

C. No plumbing fixtures or equipment shall be installed until the brochures have been reviewed by the Architect for compliance with the Contract Documents.

PART 2 – PRODUCTS

2.01 FIXTURES, GENERAL

A. Plumbing fixtures shall be furnished in white color unless otherwise herein specified.

B. Plumbing fixture trim and exposed supplies and wastes shall be polished chrome plated brass unless otherwise herein specified.

C. Exposed wastes between trap and wall may be galvanized steel nipples with polished chrome plated casings.

D. Concealed wastes above ground may be galvanized steel pipe, and concealed supplies and traps above ground may be rough brass.

E. Internal piping of shower units shall be made of non-ferrous metals. Showers units with exposed top supplies shall be provided with factory furnished housing extension between the shower unit and ceiling. Exposed parts of shower units not made of stainless steel shall be polished chrome plated brass.

F. Individual loose key stops or, if so specified, screwdriver stops shall be provided for all supplies and, unless integral with faucets, shall be mounted under the fixtures.

G. Exposed supplies and wastes to wall shall be provided with polished chrome plated brass wall escutcheons.

H. Provide drop ear elbows and brass nipples at all fixture water stubouts.

I. Accessible plumbing fixtures shall comply with all of the requirements in CBC Division 6.

J. Heights and location of all accessible fixtures shall be mounted according to CBC Section 11B-602 through Section 11B-612.

K. Accessible fixture controls shall comply with CBC Sections 11B-608.5 for showers, 11B-606.4 for lavatories and sinks, 11B-604.6 for water closets, 11B-604.9.5 for children's water closets, 11B-602.3 for drinking fountains, and 11B-605.4 for urinals.

L. Accessible lavatories and sinks shall be mounted with the front of the higher of the counter or rim surface 34" maximum above the finish floor or ground. Depth of lavatories or sinks shall not interfere with knee and toe clearance provided in accordance with CBC Section 11B-306 when a forward approach is required. CBC Sections 11B-606.3 and 11B-606.7.

M. Plumbing fixtures and accessories provided in a toilet room or bathing room required to comply with CBC Section 11B-213.2 shall comply with CBC Section 11B-213.3.

I. Clearance around accessible water closets and in toilet compartments shall be 60 inches minimum measured perpendicular from the sidewall and 56 inches minimum measured perpendicular from the rear wall per CBC Section 11B-604.3.1.

J. All single-user toilet facilities shall be identified as Gender Neutral facilities by a door symbol that complies with CBC Section 11B-216.8 and 11B-703.2.6.3. No pictogram, text or braille is required on the symbol. If tactile jamb signage is provided, the signage shall comply with the appropriate technical requirements of CBC Section 11B-703. Examples of appropriate designations are "ALL-GENDER RESTROOM", "RESTROOM", or "UNISEX RESTROOM". DSA BU 17-01.

K. Water supply and drain pipes under accessible lavatories and sinks shall be insulated or otherwise configured to protect against contact. There shall be no sharp or abrasive surfaces under accessible lavatories and sinks. CBC Section 11B-606.5.

2.02 WALL HUNG FIXTURES

A. Wall type closet bowls shall be supported completely free of the finished wall by adjustable closet carrier assemblies consisting of closet fitting, face plate and foot support. Bowls shall be held in place with bearing nuts with washers and brass acorn nuts with washers.

B. Fixtures specified with hangers or supporting arms shall have hangers or arms fastened to 5/16" thick x 8" high steel anchor plates extending at least one stud beyond the first and last fixture mounting point.

C. Hangers and exposed arms shall be attached to anchor plates with 5/16" full thread steel stud bolts, jam nuts and metal spacers with thickness equal to wall finish thickness.

D. Concealed arm assemblies shall be attached to anchor plates with four 3/8" x 1-1/4" steel bolts and nuts.

E. Anchor plates shall be drilled and tapped at the time of installation.

F. Individual shower units shall have shower heads fastened to 1/4" thick x 4" high steel anchor plates.

G. Panel shower units and wall in-line shower units shall be fastened to 5/16" thick x 8" high steel anchor plates installed at each hanger provided by the shower unit manufacturer.

H. In wood stud wall construction, the anchor plates shall be recessed flush with stud and shall be fastened to each stud with two 3/8" steel carriage bolts extending through the center of the stud and secured with steel washers and nuts.

I. In steel stud wall construction, the anchor plates shall be recessed flush with studs, 1-1/2" x 18" long furring channel shall be fastened to each stud with 1" long fillet welds spaced on 6" center front and back, and anchor plates shall be continuous fillet welded to each furring channel.

J. In masonry and concrete wall construction, anchor plates shall not be used and fixtures shall be fastened with Phillips "Red Head" JS-38 3/8" stud anchors with nuts and washers.

K. All wall hung lavatories shall be provided with Smith model 723 wall mounted concealed lavatory arm assemblies, and shall be factory drilled for concealed arm assembly.

L. Insulate offset drain pipe, tailpiece, trap arm, p-trap and hot water lines and angle stops serving all ADA lavatories and sinks; Truebro "Handi Lav-Guard" white under sink protective cover model #103 or approved equal.

2.03 FLOOR MOUNTED FIXTURES

A. Floor type closet bowls shall be set on slotted cast bronze closet ring assemblies with the bottom of the ring installed at the finished floor elevation. Joints shall be made gastight and watertight with preformed wax gasket. Closet bowls shall be held in place with 5/16" solid brass bolts and nuts concealed with china bolt caps.

2.04 DRAINS WITH FLASHING DEVICE

A. For drains specified with flashing device, the waterproofing membrane or roofing shall be carefully cut to fit the drain and shall be anchored between the drain and the flashing ring with rust proof bolts.

2.05 WATER CLOSETS

A. Fixture WC/CH - Floor mount Type Water Closet: American Standard 'Madera HET' model 3461.001 w/ 1.28 GPF, elongated bowl, vitreous china floor mounted water closet with 1-1/2 top spud, Beneke 527-SS open front white seat with "Perma-Bumper" and self-sustaining check hinge, Sloan Model "Solis" RESS-C-1.28 solar powered battery operated sensor flush valve with vacuum breaker screwdriver stop and seat bumper, J.R. Smith Fig. 9230 bronze floor flange. Assembly shall comply with the A.D.A./D.S.A. requirements for fixtures serving persons with disabilities. Provide 5/16" anchor bolts.

B. Fixture WC/C1 - Floor mount type Water closet: American Standard Madera HET model #3451.001 w/ siphon jet action, 1.28GPF, elongated bowl, vitreous china floor mounted water closet with 1-1/2 top spud, Beneke 527-SS open front white seat with "Perma-Bumper" and self-sustaining check hinge, Sloan Model "Solis" RESS-C-1.28 solar powered battery operated sensor flush valve with vacuum breaker screwdriver stop and seat bumper, J.R. Smith Fig. 9230 bronze floor flange.

C. Equivalent

1. Closet Bowls: Kohler.
2. Toilet Seats: Olsonite.

2.06 URINALS

A. Fixture UR/CH – Urinal, 0.125 GPF, American Standard #6590.525 Siphon jet action urinal, Sloan Model "Solis" 8186.13 solar powered battery operated sensor flush valve with vacuum breaker screwdriver stop, vitreous china water saver siphon jet urinal with flushing rim, ¾" connection threaded 2" inside, wall hanger, install at accessible height where indicated on the architectural drawings. Assembly shall comply with the A.D.A./D.S.A. requirements for fixtures serving persons with disabilities.

B. Fixture UR/C1 – Urinal, 0.125 GPF, American Standard #6590.525 w/ siphon jet action, Sloan Model "Solis" 8186-.13 solar powered battery operated sensor flush valve with vacuum breaker screwdriver stop, vitreous china water saver siphon jet urinal with flushing rim, ¾" connection threaded 2" inside, wall hanger. Install at height indicated on the architectural drawings.

2.07 LAVATORIES

A. Fixture LV/D1 & DH – Wall mounted Lavatory, American Standard model 0356.012, acid resisting Vitreous China bowl drilled for concealed arm assembly, size 20" x 18" x 6", white, Chicago faucet 802-VE2805-665ABCP, "MVP" two push button metered faucet w/ ½ gpm flow control, 4" center, 4" spout. Chicago 337 strainer with 1-1/4" offset tailpiece, 1006 ½" loose key angle stops with ½" O.D. brass flexible supplies and brass wall escutcheons, Fluidmaster No-burst B1F16 IAPMO listed 3/8" x 12" braided stainless steel riser with non-toxic polymer liner, 3/8" compression female inlet, ½" I.P.S. female outlet and hexagon non-ferrous nuts, 17 gauge tubular P-trap, and supply covers & Handi Lav-Guard by Truebro. Assembly shall comply with the A.D.A./D.S.A. requirements for fixtures serving persons with disabilities.

B. Equivalent

1. Vitreous China Lavatory Bowls: Kohler.
2. Arm Assemblies: Wade.

2.08 SERVICE BASINS

A. Fixture SB/A1 – Mopsink, American Standard, Model 7740.020, acid resisting enameled cast iron corner model floor mounted mop sink with curved front. 7721.038 perforated grid strainer for 3-inch connection. Chicago faucet model No. 897-CCP exposed supply fitting with integral screwdriver stops in shanks, vacuum breaker, 4 feet of rubber hose, adjustable flanges and wall nook 7745.011 removable coated rim guard, hose end spout and wall brace.

B. Equivalent

1. Service Basin Receptors: Kohler.

2.09 DRINKING FOUNTAINS

A. Fixture DF/CH - Fixture DF/CH - Wall Mounted Type Dual Height Drinking Fountain: Haws model 1119FR with bottle filler 1920FR, heavy gauge stainless steel with type 304 14 Gauge construction, strainer with 1-1/2" tailpiece, automatic stream control, self-closing valves, With vandal resistant, 14-gauge type 304 stainless steel bottle filler housing with push button operation and 1 gpm laminar flow, 1/2" screwdriver stop, copper tubing with brass compression fittings, mounting plate and support carrier with vandal proof receptor mounting; 1-1/2" cast brass L.A."P" trap; waste and water roughing-in dimensions below top of bubbler in accordance with the manufacturer's recommendations. Assembly shall comply with the A.D.A./D.S.A requirements for fixtures serving persons with disabilities. All associated water lines shall be brass, and space between the receptor and bottom plate shall be packed with fiberglass.

B. Equivalent: Elkay, Haws.

2.10 FLOOR DRAINS

A. Fixtures FD/A1,A2,A3,A4&A5 - Floor Drains: See fixture schedule on plans, sheet P0.1.

B. Equivalent: Zurn, Smith.

2.11 FLOOR SINKS

A. Fixtures FS/A1,A2&A3 - Floor Sinks: See fixture schedule on plans, sheet P0.1.

B. Equivalent; Wade.

2.12 SHOWER UNITS

A. Fixture SH/C1 - High Wall In-Line Shower Unit: Acorn 111-W-F-BS-G "Acme" Series vandalproof assembly with 14" high 14 gauge Type 304 No. 4 finish stainless steel totally enclosed housing. Type 304 stainless steel internal soap tank, "Flo-Cloz" double valves with individual stops, flangeless adjustable shower heads with 1.6 g.p.m. flow control front mounted liquid soap dispensers and vandalproof stainless steel screws. Number of shower stations shall be as indicated on the drawings.

B. Fixture SH/CH - High Wall Individual Shower Unit: Acorn 536-ADA-FH-F-H-HL-MSH-Y-LVR-PBH "Zenith" Series vandalproof assembly with single air control metering valve push button with stops. 1.6 gpm flow control fixed showerhead and 60"shower hose, lever handle diverter valve, supply elbow with elevated vacuum breaker, Fixed head at 48" AFF, and vandalproof stainless steel screws. Assembly shall comply with the A.D.A./C.B.C. requirements for fixtures serving persons with disabilities. Grab bars and folding seat will be furnished and installed under the Specialties Division of the Specifications.

2.13 ROOF DRAINS

A. Fixture RD/A1 - Roof Drain: Smith 1010-Y-CRU 15" dia. Assembly with hubless cast iron body with bottom outlet, flashing device, underdeck clamp, sump receiver and plastic dome strainer with vandalproof mounting.

B. Fixture OD/A1 - Overflow Drain: Smith 1080-Y-CRU 15" dia. assembly with hubless cast iron body with bottom outlet, 2" high water dam, flashing device, underdeck clamp, sump receiver and plastic dome strainer with vandalproof mounting.

2.14 SINK TRIM

A. Fixture Trim ST/A1: Chicago Faucet 50-GN2FC317ABCP, 4”Wristblade handles, angle stops with Brasscraft B1F16 threaded connections, 17 gauge tubular P-trap, and supply covers & Handi Lav-Guard by Truebro for supplies.

PART 3 EXECUTION

3.01 INSTALLATION

A. Mounting heights of plumbing fixtures shall be as shown in schedules on the Drawings; no changes shall be made without written permission of the Mechanical Engineer.

B. Fixture caulking shall be made with white non-hardening water proof Wilhold Latex Caulk applied in accordance with the manufacturer's recommendations.

C. Adequate distance between vacuum breaker and fixture (6" to critical level line) shall be provided.

3.02 OPERATING AND MAINTENANCE INSTRUCTIONS

A. The Contractor shall instruct the Owner's Representative who will operate the system, about the operation and maintenance of the fixtures and equipment.

B. The Contractor shall deliver to the Owner two (2) copies of Operating and Maintenance Manuals for Plumbing Fixtures and Equipment furnished and installed under Section 22 40 00.

END OF SECTION

SECTION 22 70 00
PLUMBING SYSTEMS

PART 1 GENERAL

1.01 SECTION INCLUDES

A. Section 22 05 00, General Plumbing Requirements, and Section 22 05 10, General Plumbing Materials, insofar as they are applicable to this Section, and unless otherwise herein specified.

B. Materials, equipment and labor as herein specified which shall take precedence over those elsewhere specified.

C. Sanitary sewer system consisting of building piping, connections to plumbing fixtures and equipment, and yard sewer piping to 5 ft. outside of building, including final connections to site piping.

D. Water system consisting of building water piping, connections to water using plumbing fixtures and equipment, water heaters, auxiliary equipment, and yard water piping to 5 ft. outside of building, including final connection to site piping.

E. Gas system consisting of building piping, connections to gas using fixtures and equipment, and yard gas piping from point of connection shown to indicated points of connection.

F. Roof drainage system consisting of building piping, connections to roof drains, and yard roof drainage terminated 5 ft. outside the buildings. Coordinate exact location of storm drain stub-ins where applicable, and make connections as required.

F. Section 22 40 00, Plumbing Fixtures and Equipment.

1.02 WORK NOT INCLUDED

A. Sewer, water and gas connection fees pertaining to work under this Section. Fees will be paid for by the Owner; however, the Contractor shall assist the Owner in coordinating and expediting this matter, including obtaining all permits, submitting applications and obtaining approvals from the applicable agencies.

PART 2 PRODUCTS

2.01 SEWER, WASTE AND VENT PIPING

A. Piping in Buildings

1. Coated hubless cast iron soil pipe and fittings with stainless steel clamp couplings. Pipe and fittings shall conform to the requirements of CISPI Standard 301, ASTM A 888.

2. At Contractor's option, waste and vent piping, if kept 6 in. or more above ground, may be Schedule 40 galvanized steel

pipe with coated cast iron screwed drainage fittings.

B. Piping Under Buildings: Schedule 40 PVC DWV or ABS gravity sewer pipe with solvent weld fittings, unless cast iron pipe is specifically indicated on the drawings.

C. Yard Piping

1. Polyvinyl chloride schedule 40 DMV gravity sewer pipe with solvent weld fittings, unless cast iron pipe is specifically indicated on the Drawings.

2. Minimum Coverage: 24 in., unless otherwise indicated on the Drawings.

3. Piping with less than 24 in. coverage shall be cast iron soil pipe and fittings regardless of size and shall be encased in 4" thick concrete envelope.

2.02 SEWER PIPING CLEANOUTS

A. Cleanouts shall have cast iron body with countersunk slotted tapered thread bronze plug.

B. Exterior Cleanouts

1. Cast Iron Pipe: Smith 4283 assembly in access box; access box as hereinbefore specified in Section 22 05 10.

2. Polyvinyl Chloride Pipe: Smith 4283 assembly with stainless steel clamp coupling in access box; access box as hereinbefore specified in Section 22 05 10.

C. Interior Wall Cleanouts

1. Smith 4472 assembly with stainless steel shallow cover.

2. Where job conditions do not permit use of shallow covers, Smith 4715 chrome plated bronze deep covers shall be used.

D. Interior Floor Cleanouts: Smith 4023 assembly with scoriated adjustable screw secured polished round nickel bronze tops.

E. Equivalent: Wade.

2.03 SEWER VENT FLASHING ASSEMBLIES

A. Vent pipes passing through roof shall be provided with flashing assemblies and vandal proof vent guards.

B. Composition Roof: Elmdor / Stoneman 1100 Series flashing assembly complete with 4# seamless lead flashing with 8" round skirt, cast iron counterflashing sleeve and vandalproof vent cap.

1. Steel Pipe: 1100-3 assembly

2. Cast Iron Pipe: 1100-5 assembly

C. Steel Deck Roof: Buildex "Decktite" resilient rubber cone flashing fastened with Buildex SB190 sealant and secured with Buildex "Teks" self-drilling fasteners.

1. Steel Pipe: Semco "Stormtite" 1530 vandalproof vent cap.

2. Cast Iron Pipe: Semco "Stormtite" 1550 vandalproof vent cap.

D. Vents shall terminate 7 in. above finished roof line, except as otherwise indicated or except where specifically required to exceed this dimension by the Code or structure requirements. Vents shall terminate at minimum the local code required distance from all outside air intakes.

E. The joint between pipe, flashing and counterflashing sleeve shall be sealed with non-hardening waterproof compound.

2.04 CONDENSATE DRAIN PIPING

A. Piping: Type M hard drawn copper pipe with wrought copper fittings and couplings.

2.05 CONDENSATE DRAIN PIPE FLASHING ASSEMBLIES

A. Condensate drain pipes passing through roof shall be provided with flashing assemblies.

B. Semco "Stormtite" 1100-9 flashing assembly with 4# seamless lead flashing with 8" round skirt and cast iron counterflashing sleeve.

C. The joint between pipe, flashing and counterflashing sleeve shall be sealed with non-hardening waterproof compound.

D. Top of counter-flashing sleeve shall be filled with epoxy compound.

2.06 WATER PIPING

A. Piping In Buildings and above grade: ASTM B88 Type L hard drawn copper pipe with ASTM B16.18 and B16.22 wrought copper solder fittings and couplings and brazed joints.

B. Plumbing Fixture Wall Supplies: Cast brass drop ear elbows with screwed brass nipple. All exposed piping at plumbing fixtures shall be chrome plated yellow brass except exposed pipes in shop or utility areas.

C. Piping Under Buildings

1. Type K soft annealed copper tubing with no fittings below the slab.

2. Piping shall be wrapped as specified in Section 22 05 10.

D. Yard Piping

1. Below Ground, 1-1/2" and Smaller: Schedule 80 N.S.F. and I.A.P.M.O. listed plain end polyvinyl chloride pipe with Schedule 80 N.S.F. and I.A.P.M.O. listed socket end polyvinyl chloride fittings and couplings.

2. Below Ground, 2" and Larger: Schedule 80 N.S.F. and I.A.P.M.O. listed plain end polyvinyl chloride pipe with Schedule 80 N.S.F. and I.A.P.M.O. listed socket end polyvinyl chloride fittings and couplings.

3. Minimum Coverage: 24 in.

4. Above Ground: Type L hard drawn copper pipe with wrought copper solder fittings and couplings. (Also applies to piping in pressure reducing station vault).

2.07 WATER PIPE FLASHING ASSEMBLIES

A. Water pipes passing through roof shall be provided with flashing assemblies.

B. Semco "Stormtite" 1100-9 flashing assembly with 4# seamless lead flashing with 8" round skirt and cast iron counterflashing sleeve.

C. The joint between pipe, flashing and counterflashing sleeve shall be sealed with non-hardening waterproof compound.

D. Top of counterflashing sleeve shall be filled with epoxy compound.

2.08 WATER SHUT-OFF VALVES

A. 2" and Smaller (Above Ground Only)

1. Below Ground: Stockham Nibco T-685-80-LF, 600# W.O.G., 225 °F screwed bronze ball valve with two piece body, conventional port, chrome plated ball, teflon seat and extended round handle.

2. Above Ground: Stockham Nibco S-685-80-LF, 600# W.O.G., 225 °F soldered bronze ball valve with two piece body, conventional port, chrome plated ball, teflon seat and extended round handle.

3. Equivalent: Stockham, Apollo.

B. 2-1/2" and Larger

1. Below Ground: American Flow Control 2500 Series 200# A.W.W.A. flanged cast iron gate valve with resilient seat, bronze N.R.S., O-ring seal, square wrench nut and operating wrench.

2. Above Ground: Nibco LD-2000-3, 200# W.O.G., 250 °F full lug

type butterfly valve with cast iron body, tapped lugs, replaceable EPDM seat, aluminum bronze disc, Type 416 stainless steel stem and multi-position lock lever handle.

3. Butterfly Valve Equivalent: Stockham.

2.09 WATER STRAINERS

A. 2" and Smaller

1. Watts Model 77F-D-FDA with #40 wire mesh liners, 1/64" openings.

B. 2-1/2" and Larger

1. Watts Model 77F-D-FDA with #20 wire mesh

2.10 WATER CHECK VALVES

A. 2" and Smaller

1. Below Ground: Nibco T-413-Y, Class 125, 200# W.O.G., 225°F crewed check valve with screwed bonnet and teflon disc.

2. Above Ground: Nibco S-413-Y, Class 125, 200# W.O.G., 225°F soldered check valve with screwed bonnet and teflon disc.

3. Equivalent: Stockham.

B. 2-1/2" and Larger

1. Metraflex 900 Series 125#, 200 °F flanged check valve with semi-steel globe type body, bronze trim and stainless steel spring.

2. Equivalent: Mueller.

2.11 WATER PIPE SEISMIC CONNECTORS

A. Metraflex “Metraloop” MLS Series 125# assembly with bronze hose bronze braid, 180° copper return and two 90° copper elbows with solder ends. Units shall be suitable for 3 in. movement in all directions. Units shall be of the same size as pipe lines in which they are to be used.

B. Metraflex Model CS-90, 200#, 400 deg. F assembly with 90 deg. solder end bronze elbows and stainless steel flexible hose and braid suitable for 2 in. movement in all directions. Units shall be of the same size as pipe lines in which they are to be used.

C. Pipe connectors shall be provided at all locations where water piping crosses seismic separations.

2.12 BACKFLOW PREVENTER ASSEMBLIES

A. 2" and Smaller: Watts 909-QT, 175# reduced pressure type unit with two full port ball valves with resilient seats, two spring loaded check valves, test cocks and relief valve. (or as required by local jurisdiction – Contractor to verify).

B. 2-1/2" and Larger: Watts 957-BFG 175# reduced pressure type unit with two N.R.S. gate valves with resilient seats, two spring loaded check valves, test cocks and relief valve. (or as required by local jurisdiction – Contractor to verify).

C. Assemblies shall be U.S.C., I.A.P.M.O. and County Health Department listed at the time of installation.

D. Equivalent: Febco, Wilkins.

2.13 HOSE BIBBS AND STOPS

A. Inside Hose Bibbs: Acorn 8121 polished chrome plated loose key operated brass body unit with wall flange, vacuum breaker and 3/4" hose end.

B. Outside Hose Bibbs: Acorn 8121 rough chrome plated loose key operated brass body unit with wall flange, vacuum breaker and 3/4" hose end.

C. Hose Bibbs in Access Boxes: Acorn 8104 or 8151 aluminum alloy box with drain lip, wall flange and door with LL-24 lock, loose key operated brass body stop and loose key operated brass body hose bibb with vacuum breaker and 3/4" hose end; flange and door shall be provided with anodized satin finish, stop and hose bibb shall be rough chrome plated.

D. Garden hose valves: Acorn #8126 rough chrome plated loose key operated brass body with vacuum breaker and ¾" hose end. Provide a support assembly for hose bibbs located on roof.

E. Partition Stops: Chicago 1771 1/2" chrome plated loose key operated brass body.

F. Straight Stops: Chicago 45-LK 1/2" chrome plated loose key operated brass body.

2.14 SOUND ISOLATORS

A. Semco "Trisolator" units with cadmium plated steel shell and felt lining.

B. Sound isolators shall be provided for water piping at all pipe hangers and supports.

C. Equivalent: Tolco.

D. At Contractor's option, the following Tolco factory felt lined pipe

hangers may be used in lieu of the specified pipe hangers and sound isolators:

1. 2" and Smaller: No. 2-F adjustable ring hanger.

2. 2-1/2" and Larger: No. 1-F adjustable clevis hanger.

2.15 WATER HAMMER ARRESTERS

A. Smith "Hydrotrol" 5000 Series P.D.I. certified bellows type units of all stainless steel construction.

B. Equivalent: Wade.

C. Piston Type water hammer arresters shall not be used.

D. Water hammer arresters shall be provided at each isolated flush valve, before the last plumbing fixture for each water header serving multiple plumbing fixtures, and elsewhere as indicated on the Drawings.

E. Water hammer arresters shall be provided where required to eliminate water hammer at plumbing fixtures and elsewhere as indicated on the Drawings.

F. For rooms with rigid ceiling, water hammer arresters shall be installed in wall behind access panels; access panels shall be as specified in Section 22 05 10.

2.16 WATER HEATERS

A. Instantaneous type: Chronomite Instant-Flow Model SR-30 U.L. Listed 9 KW, 208 V, 1 phase instantaneous electric heater with 1/2" compression fitting connections and vandalproof hose spray head with 1/2 g.p.m. flow control; head shall be installed in lavatory faucet outlet in lieu of aerator.

B. Storage Tank type: A.O. Smith model BTH (Cyclone XHE). AGA, UL & CEC listed natural gas-fired storage water heater. Water heater shall be of the seamless glass lined steel tank construction with sealed combustion chamber; must be condensing type having 94% recovery efficiency, vented with CPVC schedule 40 piping. Equipped with power burner, integrated solid State temp and ignition control device, led fault display, temp settings digital display and A.S.M.E. rated press/temp relief valve. The outer jacketing shall have a baked enamel finish and thick foam insulation. Water heater shall have 3-year warranty and certified suitable for portable water heating.

C. Equivalent: American, More-Flo.

2.17 DOMESTIC HOT WATER EXPANSION TANKS

A. Amtrol Thermal-X-Trol pre-pressurized diaphram-type expansion tanks.

B. Non-metallic, non-corrosive water reservoir.

C. N.S.F. and IAPMO listed.

D. Tank shall be isolated during the water piping sterilization process.

E. Equivalent: Wilkins

2.18 LINE MOUNTED WATER PUMPS

A. Bell & Gossett PR Series 1” all bronze unit with motor with built-in automatic reset overload protection.

B. Pumps shall be suitable for hot water service.

C. Equivalent: Grundfos.

2.19 TRAP PRIMERS

A. Precision Plumbing Products "Prime-Rite" or Watts LFTP300 units with brass body and "O" ring seal provided for all floor drains and floor sinks.

B. Trap primers shall be provided with access panels and shut-off valves; panels shall be as specified in Section 22 05 10.

2.20 THERMOSTATIC CONTROLLERS

A. Lawler model 802 thermostatic tempering valve with three ports and triple duty check stops, for hot water system where indicated on plans. Tempering valves shall be set at 110°F.

B. Equivalent: Leonard, Powers, Acorn.

2.21 WATER PIPING INSULATION

A. Hot water piping and hot water return piping shall be insulated with 1" thick Manville "Micro-Lok" 850 (R = 4.0) fiberglass pipe insulation with a flame spread rating of not more than 25 without evidence of continuous progressive combustion and with a smoke developed rating not higher than 50. Insulation shall be applied after piping has been installed, tested and is in a dry and clean condition.

B. Pipe insulation shall be provided with Type AP-T Plus composite rated all purpose jacket with integral pressure sensitive adhesive. Transverse butted joints shall be covered with 2" wide Manville polyvinyl chloride "Z-Tape" strips with pressure sensitive adhesive.

C. At hangers and supports, piping shall be provided with 9" long 1" thick Manville "Thermo 12" calcium silicate inserts resting in 6" long 20 gauge galvanized sheet steel sleeves. All insulated joints shall be covered with 2" wide "Z-Tape" strips.

D. Fittings and valve bodies shall be covered with Manville factory precut fiberglass "Hi-Lo Temp" inserts protected with Manville "Zeston 2000" premolded polyvinyl chloride fitting covers sealed with "Z-Tape" strips. Unions and strainers shall not be covered. Insulation shall be neatly terminated on each end at unions and strainers with Ryder 1-GP insulating cement.

E. Tempered water piping shall be insulated as hereinbefore specified for hot water piping.

F. Back flow valves shall be insulated.

G. Lavatories and sinks offset drain pipe, tailpiece, P-trap, trap arm and water supply pipe and angle stop shall be insulated w/ Truebro ”Handi Lav-Guard” insulating kits.

H. Underground hot water, hot water return and tempered water piping shall be insulated with “DRITHERM” water proof underground pipe insulation and corrosion protection.

I. Equivalent: Certain-Teed.

2.22 GAS PIPING

A. Piping in Buildings

1. 2" and Smaller: Schedule 40 black steel pipe with 150# black banded malleable iron screwed fittings and couplings.

2. 2-1/2" and Larger: Schedule 40 black steel pipe with standard weight carbon steel welding fittings. At Contractor's option, pipe and fittings may be Schedule 40 black steel pipe with 150# black banded malleable iron screwed fittings and couplings.

3. Galvanized steel piping shall not be used.

B. Piping Under Buildings: Not permitted.

C. Piping under steps and covered walks shall be installed in gas tight conduit not less than Schedule 40 pipe, with an interior diameter not less than ½” larger than the gas pipe outside diameter, which shall be vented to outside, per CPC Section 1210.1.6.

D. Yard Piping

1. Below Ground, 2" and Smaller: Plexco Yellow Pipe PE 2406 I.A.P.M.O. listed polyethylene plastic pipe with socket fused fittings and couplings; pipe shall be identified with factory printed words "GAS USE ONLY".

2. Below Ground, 2-1/2" and Larger: Plexco Yellow Pipe PE2406 I.A.P.M.O. listed polyethylene plastic pipe with butt fused joints and butt fusion fittings; pipe shall be identified

with factory printed words "GAS USE ONLY".

3. Minimum Coverage: 24 in.

4. Above Ground, 2" and Smaller: Schedule 40 black steel pipe with 150# black banded malleable iron screwed fittings and couplings.

5. Above Ground, 2-1/2" and Larger: Schedule 40 black steel pipe with standard weight carbon steel welding fittings. At Contractor's option, pipe and fittings may be Schedule 40 black steel pipe with 150# black banded malleable iron screwed fittings and couplings.

6. Galvanized steel piping shall not be used.

E. Yard Piping Transitional Risers

1. R.W.Lyall Lyco 90 °F PE 2406 polyethylene pipe x steel pipe units.

2. 1-1/2" and smaller units shall be factory pre-bent, 2" and larger units shall have butt fused 90° polyethylene pipe elbow and shall be provided with 5 ft. long steel mounting stake.

3. 2" and smaller units shall have threaded steel pipe ends, 3" and larger units shall have flanged steel pipe ends.

F. Contractor installing polyethylene piping shall have PPC (Polyethylene Piping of California, Inc.) certificate.

2.23 GAS PIPE FLASHING ASSEMBLIES

A. Gas piping passing through roof shall be provided with flashing assemblies.

B. Semco "Stormtite" 1100-9 flashing assembly with 4# seamless lead flashing with 8" round skirt and cast iron counter-flashing sleeve.

C. The joint between pipe, flashing and counterflashing sleeve shall be sealed with non-hardening waterproof compound.

D. Top of counterflashing sleeve shall be filled with epoxy compound.

2.24 GAS SHUT-OFF VALVES

A. Above ground 2" and Smaller: Rockwell No. 142, 175# W.O.G. screwed semi-steel body lubricated plug valve with operating wrench.

B. Above ground 2-1/2" and Larger: Rockwell No. 143, 175# W.O.G. flanged semi-steel body lubricated plug valve with operation wrench.

C. Below Ground ¾" to 6": L4ALL polyethylene ball valves, ASME B16.40 with quarter turn 2" operating nut. Polyethylene ball valves shall be used with polyethylene gas distribution lines for underground installation only.

D. Emergency Solenoid Actuated Shut-Off Valve: Asco Red Hat Direct Acting Gas Shut-Off Valve with Schneider Electric 9001 KR9RH13 push/pull activation switch with red mushroom button.

E. Equivalent: Walworth, Homestead.

2.25 GAS PIPE SEISMIC CONNECTORS

A. Metraflex "Metraloop" ML Series A.G.A. listed assembly with stainless steel hose, stainless steel braid, 180□ steel return and two 90□ steel elbows. Units shall be suitable for 3 in movement in all directions. Units shall be of the same size as pipe lines in which they are to be used.

B. 2" and Smaller: Model MLT, 450#, screwed connections.

C. 2-1/2" and Larger: Model MLF, 200#, flanged connections.

D. Pipe connections shall be provided at all locations where gas piping crosses seismic separations.

2.26 GAS PRESSURE REGULATORS

A. Pietro Fiorentini 30051 or 30053 Series adjustable gas pressure regulator with cast iron valve body, two piece cast iron/steel diaphragm and spring housing nitrile rubber diaphragm, cotton reinforced Buna N diaphragm, spring loaded relief valve and vent connection.

B. Vent pipe shall be extended above roof and away from any outdoor air intakes, as indicated on the Drawings and as required by code. Vent pipe sizing shall be per manufacturer's recommendations. Termination shall be minimum 10-feet from any outdoor air openings, and shall meet all other code required clearances.

C. Equivalent: American Meter, Fisher.

2.27 GAS EARTHQUAKE SHUT-OFF VALVES

A. 2" and Smaller: Pacific Seismic Products 300 Series or Safe-T-Quake Corp. Model STQ.

B. 2-1/2" and Larger: Pacific Seismic Products, Inc., 300 Series.

2.28 ROOF DRAINAGE PIPING

A. Piping in Buildings

1. Concealed Piping: Coated hubless cast iron soil pipe and fittings with stainless steel clamp couplings. At Contractor's option, piping may be Schedule 40 galvanized steel grooved pipe with Victaulic galvanized grooved fittings and Victaulic No. 77 malleable iron couplings with Grade H white gasket.

2. Exposed Piping: Schedule 40 black steel pipes with standard weight carbon steel welding fittings. Piping shall be galvanized after fabrication.

C. Piping Under Building: Coated hubless cast iron soil pipe and fittings with MG cast iron couplings with stainless steel bolts.

2.29 IDENTIFICATION FOR PLUMBING PIPING AND EQUIPMENT

A. Materials & Products:

1. Equipment Labels: Metal.
2. Warning Signs and Labels: 1/8 inch thick with fasteners.
3. Pipe Labels: Pretensioned.
4. Stencils: Fiberboard or metal.
5. Valve Tags: Brass, 0.032-inch minimum thickness.
6. Warning Tags: Approx 4x7 inches, brass grommet and wire fasteners.

PART 3 EXECUTION

3.01 SEWER PIPING INSTALLATION

A. Cleanouts shall be provided where indicated or required by the Code a minimum of 60 feet apart.

B. Unless otherwise indicated, cleanouts shall be extended to grade or to the outside of the building.

C. Cleanout access boxes, covers and tops shall be installed flush with finished grade, wall and floor, and shall be secured with integral lugs and bolts or screws. Where covering material such as tile is specified for the floor, the thickness of the floor covering shall be ascertained in order to obtain flush installation of the cleanout top at the finished floor elevation. Where carpet is specified, cleanout markers shall be used.

D. Unless otherwise indicated or directed, horizontal piping shall be installed to a uniform grade of not less than 1/4 in. per ft.

E. Where invert elevations are indicated on the Drawings piping shall be laid accurately to grade.

F. Connection between cast iron soil pipe and polyvinyl chloride sewer pipe shall be made with Calder rubber couplings with stainless steel clamps; after test, clamps shall be wrapped with two layers of 2" wide 35 mils thick Polyken 931 black butyl rubber molding tape with 1" lap.

G. Cast iron soil piping shall be supported at every joint in straight pipe and at every fitting; at Contractor's option, horizontal piping may be supported by R. K. Industries "No-Hub Support" continuous channel made of 14 gauge galvanized steel with hangers provided under channel at 8 ft. on centers.

H. Vent piping shall be graded for proper ventilation and to allow piping to free itself quickly of condensation or water.

I. Vents shall be ganged wherever possible.

J. Wall cleanouts above urinals shall be installed 48 in. above the finished floor. All other wall cleanouts shall be installed 18 in. above the finished floor.

3.02 WATER PIPING INSTALLATION

A. Screwed valves for polyvinyl chloride plastic piping shall be provided with Schedule 80 PVC Type I, N.S.F. listed socket to thread adapter.

B. Screwed valves for copper piping shall be provided with brass solder to thread adapters.

C. Discharge piping from relief valves shall be of the same size as the relief valve outlet and shall be extended down to floor sink or service basin as indicated on the Drawings.

D. Plastic piping below ground shall be provided in its entire length with 2" below ground wide Terra Tape, Type D metalized continuous blue identification tape with the words "CAUTION, WATER LINE BELOW" printed on tape; tape shall be laid on top of sand backfill envelope. Tape shall terminate with a 18 in. slack in all building water shut-off valve boxes. Thrust blocks shall be provided at each turn. In addition to the identification tape, plastic piping below ground shall be provided in its entire length with Type UF, 600 volt insulated 18 ga. solid copper tracing wire.

E. Backfilling of plastic piping shall <u>not</u> be done when piping is in expanded position.

F. Flanged connections below ground shall be installed with stainless steel bolts, nuts and washers.

G. Transition between polyvinyl chloride plastic pipe and copper pipe shall be made with Schedule 80 N.S.F. and U.L. listed polyvinyl chloride socket to thread adapter for 2" and smaller pipe and 150# polyvinyl chloride plastic socket end flange and 125# cast brass solder end flange for 2-1/2" and larger pipe.

H. A 3/4" ball valve in access box for introduction of sterilization material shall be provided near the point of connection in the underground water piping.

I. Copper water piping shall be supported every 10 ft.; however, copper water piping 1-1/2" and smaller shall be supported every 6 ft.

J. Hot water and cold water piping shall be installed not closer than 6 in. from each other.

K. Piping insulation shall be omitted on hot water piping at the penetration of fire rated walls.

L. Ball type shut-off valves shall be provided at each restroom, at each isolated fixture, or as indicated on drawings.

M. Water piping shall be thoroughly flushed by letting water run out of all faucets and hose bibbs for 15 minutes.

N. All water shut-off and check valves shall be AB1953 compliant.

O. Any water line serving two or more fixtures shall be provided with dedicated shut-off valve (ball type). Piping systems shall be supplied with valves arranged so as to give complete and regulating control of each building and piping systems throughout the building, and located so all parts are easily accessible and maintained.

P. Domestic water piping and specialties shall meet the lead-free requirements of California HSC section 116875, and shall comply with NSF61.

Q. Unions or flanges shall be furnished and installed at each threaded connection to all equipment or valves. The unions or flanges shall be located so that the piping can be easily disconnected for removal of the equipment, tank, or valve.

3.03 GAS PIPING INSTALLATION

A. Plastic piping shall be provided in its entire length with 2" wide Terra Tape, Type D metalized continuous yellow identification tape with the words "CAUTION, GAS LINE BELOW" printed on tape; tape shall be laid on top of sand backfill envelope. Tape runs shall terminate with 18 in. slack in valve boxes provided near building gas shut-off valves; valve boxes shall be as hereinbefore specified in Section 22 05 10. In addition to the identification tape, plastic piping below ground shall be provided in its entire length with type UF, 600 volt insulated 18 ga. solid copper tracing wire.

B. Backfilling of plastic piping shall not be done when the piping is in expanded position. Piping shall be buried minimum 30” deep and back filled with sand.

C. Flanged connections below ground shall be made with stainless steel bolts, nuts and washers.

D. Welding fittings shall be tees, elbows and reducers except that "Fishmouth" welding nipples and "Tee-Lets" may be used for branch lines with two or more pipe sizes smaller than the pipe run. Saddles, welded stubs and mitered fittings and joints shall not be used.

E. Gas piping shall be supported every 10 ft.; however, gas piping 1" and smaller shall be supported every 6 ft.

F. Unless otherwise hereinbefore specified, connections to equipment shall be made with rigid piping.

G. All building gas shut-off valves shall be conspicuously and permanently identified in accordance with the Fire Department requirements, and shall be the same size as the gas service line, with a reduction in flexible connection and unit connection size after the valve.

H. Earthquake shut-off valves shall be provided at each building connection

I. A gas shut off valve shall be provided and installed at each gas pressure regulator, immediately upstream of the regulator.

J. Piping under steps and covered walks shall be installed in gas tight conduit not less than Schedule 40 pipe, with an interior diameter not less than ½ inch larger than the gas pipe OD, which shall be vented to cool, per CPC Section 1211.4.

K. Metallic gas piping and fittings in contact with material or atmosphere exerting a corrosive action shall be coated with a corrosion-resistant material, per CPC Section 1210.2.

3.04 ROOF DRAINAGE PIPING INSTALLATION

A. Unless otherwise indicated or directed, horizontal piping shall be installed to a uniform grade of not less than 1/4 in. per ft.

B. Roof deck openings for roof drains specified with sump receivers shall be sized in accordance with the manufacturer's recommendations.

C. Cast iron soil piping shall be supported at every joint in straight pipe and at every fitting; at Contractor's option, horizontal piping may be supported by R. K. Industries "No-Hub Support" continuous channel made of 14 gauge galvanized steel with hangers provided under channel at 8 ft. on centers.

D. Steel piping with Victaulic fittings shall be supported in straight pipe at every joint with the pipe hangers and supports spaced not more than 10 ft. on centers, and at every fitting.

E. Straps and bolts for fastening of exposed downspout piping shall be galvanized.

F. Cleanout shall be provided at each downspout location connecting to an on-site storm drain system, per CPC Section 1101.12.2.

3.05 GENERAL INSTALLATION

A. Line mounted water pumps shall be supported by angle iron brackets; 1/4" thick neoprene pad shall be provided between the pump and bracket.

B. Hot water temperature shall be 100° F.

C. Trap primers shall be provided for all floor drains, floor sinks, trench drains and roof sinks. A ball type shut-off valve shall be provided and installed at each trap primer, immediately upstream of the trap primer.

D. All water heaters over 6 gallon capacity shall be provided with well-type thermometers.

E. All water heaters shall be provided with an expansion tank sized per manufacturer’s recommendations.

F. Condensate piping installed horizontally located above ceilings shall be insulated as herein specified for hot water piping.

3.06 WATER PIPING STERILIZATION

A. The entire domestic water system shall be sterilized after the piping has been tested, but before acceptance of work for operation.

B. Sterilization shall be performed by one of the following sterilization laboratories:

1. E. W. Smith Chemical Co., La Puente, California

2. Water Chemists, Cerritos, California

3. Name of any other sterilization laboratory shall be submitted for Architect's review prior to the start of water sterilization.

4. No water sterilization shall be done prior to the review of the laboratory by the Architect.

C. Prior to sterilization, screens in all faucets and strainers shall be removed and the entire system shall be thoroughly flushed with water.

D. Sterilization material shall be chlorine, calcium hyperchlorite or sodium hypochlorite, complying with the A.W.W.A. C-601-68 Specifications.

E. Chlorinating materials shall be introduced into the system through a chlorination valve in a slow and continuous manner at an even flow rate and shall provide a dosage of not less than 50 parts per million.

F. After a retention period of not less than 24 hours, the chlorine residual must not drop below 25 parts per million concentration; should the chlorine content drop below the above level, the entire chlorination process shall be repeated. All valves installed in lines being sterilized shall be opened and closed several times during the chlorine retention period.

G. After chlorination, the entire system shall be flushed out with clean water at all outlets, including faucets, hose bibbs and dead ends, until the residual chlorine content is not more than 0.2 parts per million; after that, all removed screens shall be reinstalled.

H. A certificate of sterilization, bearing the signature of an official of the water sterilization laboratory performing the sterilization shall be submitted to the Architect.

3.07 TESTS

A. General: As per Section 22 05 10.

B. Sewer, waste and vent piping shall be tested hydrostatically under 5 p.s.i. pressure for not less than one hour.

C. Water piping shall be tested hydrostatically under 125 p.s.i. pressure for not less than one hour.

D. Building gas piping and low pressure yard gas piping shall be tested with compressed air under 10 p.s.i. pressure for not less than one hour. Medium pressure (5 p.s.i.) yard gas piping shall be tested with compressed air under 60 p.s.i. pressure for not less than one hour. Each joint shall be subjected to an application of soap suds and shall be individually inspected for leaks.

E. Roof drainage piping shall be tested hydrostatically under 5 p.s.i. pressure for not less than one hour.

3.08 OPERATING AND MAINTENANCE INSTRUCTIONS

A. The Contractor shall instruct the Owner's Representative who will operate the systems, about the operation and maintenance of the equipment.

B. The Contractor shall deliver to the Owner two (2) copies of Operating and Maintenance Manuals for Plumbing Systems furnished and installed under Section 22 70 00.

3.09 GUARANTEE SERVICE CALLS

A. General: As per Section 22 05 00.

B. During the guarantee period, the Contractor shall provide repair service within 24 hours after receiving a request for service from the Owner.

3.10 FREEZE PROTECTION

A. Install insulation and freeze protection on all water pipes and traps in unheated or un-insulated spaces subject to freezing. Heat trace shall be Raychem XL-Trace or approved equal with glass cloth tape, model 5XLI/CR heating cable (120V), 1" insulation, model Rayclic-PC power connection kit, and caution labels as required.

B. Connect heat tracing cable to emergency power circuits where available.

END OF SECTION

SECTION 23 05 00
GENERAL MECHANICAL REQUIREMENTS

PART 1 GENERAL

1.01 SECTION INCLUDES

A. Division 1 - General Requirements, insofar as it is applicable to Division 23 Sections, and unless otherwise hereinafter specified.

B. All material, equipment and labor required to furnish and install the Heating, Ventilating and Air Conditioning (HVAC) shown on the Drawings and/or hereinafter specified, and otherwise hereinafter specified, shall be complete, tested and ready for use.

C. Work under Division 23 specified in the following Sections:

1. Section 23 05 00, General Mechanical Requirements.

2. Section 23 05 10, General Mechanical Materials.

3. Section 23 05 93, HVAC Air Balancing.

4. Section 23 31 00, Air Distribution.

5. Section 23 34 00, Exhaust System.

6. Section 23 70 00, HVAC Systems.

7. Section 23 09 23, Direct Digital Controls

1.02 RELATED WORK SPECIFIED ELSEWHERE

A. Air Louvers.

B. Equipment Platforms.

C. Concrete Work.

D. Patching.

E. Painting except as hereinafter specified.

F. Electrical Work except as hereinafter specified.

G. Equipment furnished by the Owner or under other Sections.

1.03 PERMITS AND FEES

A. Unless otherwise hereinafter specified, the Contractor shall apply and pay for all necessary permits, fees, charges and inspections required by any public authority having jurisdiction; any expense incurred is part of this Contract.

1.04 LOCATION AND ACCESSIBILITY

A. The Contractor shall fully inform himself regarding any and all peculiarities and limitations of the spaces available for the installation of all work under Division 23 Sections. The Drawings indicate the desired location and arrangement of piping, duct work and equipment and are to be followed as closely as possible. The Contractor shall not fabricate any piping and duct work until he has verified in the field that the shown and/or specified piping, duct work and equipment can be installed in the allocated space without causing any restrictions in the required access or clearance to the piping, duct work and equipment and/or any other equipment furnished and installed under other Divisions.

B. The Contractor shall install the piping, duct work and equipment with adequate clearance around, above and below the piping, duct work and equipment as defined by the governing codes and as required for proper maintenance and servicing.

1.05 CODES AND REGULATIONS

A. All work provided under Division 23 Sections shall comply with the following Titles of the California Code of Regulations (CCR).

1. Title 19, Public Safety.

2. Title 8, Industrial Relations.

3. Title 24, Building Standards, including Administrative Regulations.

4. State Building Code (2018 Uniform Building Code with 2019 California State Amendments), 2019 California Building Code.

5. State Electrical Code (2017 National Electrical Code with 2019 California State Amendments). 2019 California Electrical Code.

6. State Mechanical Code (2018 Uniform Mechanical Code with 2019 California State Amendments). 2019 California Mechanical Code.

7. State Plumbing Code (2018 Uniform Plumbing Code with 2019 CPC California State Amendments). 2019 California State Plumbing Code.

B. In addition, all work provided under Division 23 Sections, shall comply with other applicable codes and regulations.

C. When the Drawings or Specifications call for sizes or grades different than required by the governing codes and regulations, the Contractor shall provide and install the larger size or higher grade. Nothing on the Drawings or in these Specifications is to be construed to permit work in

violation of the governing codes and regulations.

1.06 SUBSTITUTIONS

A. Unless otherwise directed in Division 1, specific reference to materials and equipment by name and catalog number shall be interpreted as establishing a standard of quality and shall be deemed to be followed by the words "or equal". The Contractor may offer any material and equipment which he believes to be equal to that so specified.

B. Should the Contractor desire to substitute any material, equipment or other items for those specified, he shall submit a complete list, including detailed equipment layouts within ten (10) calendar days after the scheduled Start of Construction. Said data shall be submitted in four (4) copies, assembled in individual brochures.

C. Any changes required by the furnishing and installation of substituted material, equipment and other items shall be arranged for and paid for by the Contractor; any expense incurred is part of this Contract.

D. Should the Contractor neglect to submit the data within the specified time limit, or should the Architect reject the submitted items and the Contractor fail to resubmit other data complying in the Architect's opinion with the Contract Documents within ten (10) calendar days, items then shall be furnished in strict accordance with the detailed Specifications and drawings.

1.07 EQUIVALENT EQUIPMENT

A. In addition to detailed specifications of materials and equipment, the Specifications make reference to "equivalent equipment", which is not to be construed as a substitution.

B. Should the Contractor desire to use any "equivalent equipment", he shall submit complete data, including detailed layouts within ten (10) calendar days after the scheduled Start of Construction. Said data shall be submitted in seven (7) copies, assembled in individual brochures.

C. "Equivalent equipment" will be considered as complying with the Contract documents if the quality, features, performance, physical shape and appearance of the "equivalent equipment" are in the Architect's opinion the same or similar to those of the material and equipment described in detailed Specifications.

D. Any changes required by the furnishing and installation of "equivalent equipment" shall be arranged for and paid for by the Contractor; any expense incurred is part of the Contract.

E. Should the Contractor neglect to submit said data within the specified time limit, items shall be furnished in strict accordance with the detailed Specifications and drawings.

1.08 SUBMITTALS

A. Unless otherwise indicated in Division 1, within fourteen (14) calendar days after the scheduled Start of Construction, the Contractor shall submit complete data as hereinafter specified. Said data, digitally assembled, shall be submitted in electronic pdf format, along with one (1) bound hard copy. Each item shall be identified by the paragraph number and page number as shown in the Specifications. Should corrections be necessary, the Contractor shall resubmit within fourteen (14) calendar days after the submittals are returned by the Architect.

B. Review of submitted items by the Architect for compliance with the Contract Documents shall not relieve the Contractor of the responsibility for any deviations from the Drawings or Specifications, unless he has in writing specifically called attention to such deviations at the time of submission, not shall it relieve him of responsibility for errors of any sort in such submittals.

1.09 MATERIALS, EQUIPMENT, WORKMANSHIP AND JUDGMENT

A. Unless otherwise hereinafter specified, all materials and equipment furnished and installed under Division 23 Sections shall be new, of best grade and the latest products as listed in the latest printed catalog.

B. All material and equipment of the same type and/or class shall be standard product of the same manufacturer.

C. Workmanship shall be of the best quality and only competent mechanics skilled in their trades shall be employed. The Contractor shall furnish the services of an experienced superintendent, who will be constantly in charge of the installation of the work until formal completion of work.

D. Whenever the words "or equal", "equivalent equipment", "suitable", "as directed" or other words of similar intent or meaning are used, implying that judgment is to be exercised, it is understood that it is the judgment of the Architect that is referred to.

E. The Architect shall have the right to interpret compliance of material, equipment and/or workmanship with the Contract documents.

1.10 DRAWINGS AND SPECIFICATIONS

A. Drawings and specifications are deemed to be complementary.

B. In case of discrepancy between the Drawings and the Specifications, the Contractor shall provide the more expensive alternate unless he has obtained a written clarification prior to bid opening.

C. Anything shown on the Drawings and not mentioned in the Specifications, or mentioned in the Specifications and not shown on the Drawings, shall be deemed to have been mentioned in both.

D. Should the material and equipment shown on the Drawings not be specified by name, model number and description, the Contractor shall provide such material and equipment in accordance with the Architect's selection unless he has obtained a written clarification prior to bid opening.

E. All shop drawings by no later than 30 calendar days after Notice to Proceed, (4) four copies, unless authorized officially by District wet signature for additional time.

1.11 MANUFACTURER'S DIRECTIONS

A. If the manufacturers of equipment furnished and installed under Division 23 Sections furnish directions covering points not shown on the Drawings or herein specified, such directions shall be followed.

1.12 COOPERATION WITH OTHER TRADES

A. The work under Division 23 Sections shall be coordinated with the work of the other trades toward the general purpose of having the construction progress as rapidly and as smoothly as possible with a minimum of interference between one trade and another.

1.13 OPENINGS, SUPPORTS, CUTTING AND CORING

A. The Contractor shall provide all openings, supports, cutting and coring which may be required for the installation of the work under Division 23 Sections. Where pipes are to pass through or interfere with any structural member, or where notching, boring or cutting of the structure is necessary, the work shall be done as directed by the Architect. Top plates in bearing partitions shall not be cut or notched.

B. Patching is not part of Division 23 Sections.

1.14 CLOSING-IN OF UNINSPECTED WORK

A. The Contractor shall not allow or cause any of the work to be covered up or enclosed until it has been tested by the Contractor, and reviewed and found by the Architect to comply with the Contract documents. Should any work be enclosed or covered up before such test and review, the Contractor shall, at his own expense, uncover the work for such test and review, make all repairs as may be necessary to restore all his work and that of other trades to its original and proper condition.

1.15 SAFETY

A. The Contractor shall be solely and completely responsible for

the condition of the premises on which the work is performed and for safety of all persons and property on the site during the construction. This requirement shall not be limited to normal working hours but shall apply continuously.

B. The Contractor shall comply with all governing safety regulations.

1.16 DAMAGE BY LEAKS

A. The Contractor shall be responsible for all damages to any part of the premises caused by leaks or breaks in pipes, fixtures or equipment furnished and installed under Division 23 Sections for a period of one year from the date of formal acceptance of work by the Owner.

1.17 RECORD DRAWINGS

A. At the beginning of the project, the Architect will furnish the Contractor one blue-line print and one reproducible transparency of each applicable drawing. Contractor shall keep an accurate dimensioned record of the as-built locations and elevations of all buried lines, manholes, cleanouts, valves, plugged tees, capped ends and of all work which is installed differently from that shown on the Drawings. This record shall be kept-to-date on the blue-line print as the job progresses and shall be available for review at the construction site at all times.

B. Before formal acceptance of the work, this information shall be transferred by the Contractor in a neat, legible, reproducible manner to the transparency, shall be stamped, dated and signed by the installing Contractor, shall be signed by the Inspector and shall be delivered to the Architect unfolded. If, in the opinion of the Architect, the record is not legible, the Contractor shall employ a satisfactory draftsman to properly perform this work.

1.18 ELECTRICAL WORK

A. Unless otherwise noted or hereinafter specified, all automatic electric controls connected with the work of Division 23 Sections shall be furnished and installed under Division 23 Sections. Automatic electric controls include such items as thermostats, temperature controllers, fan speed control, electrically operated valves and damper actuators.

B. Electric motors and power driven equipment connected with the work of Division 23 Sections shall be furnished and installed under Division 23 Sections.

C. Work in connection with power circuits, including conduits, conductors, outlets, disconnect switches, motor starters, miscellaneous wiring devices and making of final connections will be done under Division 26 Sections.

D. All mechanical work performed for this project shall conform to the California Mechanical Code, to Local Building Codes and in conformance with Division 23 of these Specifications, whether the work is provided under the Mechanical or the Electrical sections of the specifications. Where the Division 23 section contractor is required to provide electrical work, he shall arrange for the work to be done by a licensed electrical contractor using qualified electricians. The Division 23 contractor shall be solely and completely responsible for the correct functioning of all equipment regardless of who provided the electrical work.

E. The work under Division 23 shall include the following:

1. All motors required by mechanical equipment.

2. All starters for mechanical equipment which are not provided under the electrical division as part of a motor control center.

3. All wiring interior to packaged equipment furnished as an integral part of the equipment.

4. All control wiring and conduit for mechanical control systems.

5. All control systems required by mechanical equipment.

6. The work under Division 26 shall include the following:

   a. All power wiring and conduit; and conduit only for EMS control conductors between each building and the main control panel unless otherwise noted.

   b. Electrical disconnects as shown on the electrical drawings.

   c. Starters forming part of a motor control center.

F. All power wiring and conduit to equipment furnished under Division 23 shall be provided under Division 26. Control wiring and conduit, whether line voltage or low voltage, shall be provided under the Division which furnishes the equipment.

G. Power wiring shall be defined as all wiring between the panelboard switchboard overcurrent device, motor control center starter or switch, and the safety disconnect switch or control panel serving the equipment. Also, the power wiring between safety disconnect switch and the equipment line terminals.

H. Control wiring shall be defined as all wiring, either line voltage or low voltage, required for the control and interlocking of equipment, including but not limited to

wiring to motor control stations, solenoid valves, pressure switches, limit switches, flow switches, thermostats, humidistats, safety devices and other components required for the proper operation of the equipment.

I. All motor starters which are not part of motor control centers and which are required for equipment furnished under this division shall be furnished and installed by the division furnishing the equipment and power wiring connected under the Electrical Division. Motor starters and control devices in motor control centers shall be furnished and installed under Electrical Division.

J. Electrical Division shall make all final connections of power wiring to equipment furnished under this division.

K. Wiring diagrams complete with all connection details shall be furnished under each respective section.

L Motor starters supplied by Mechanical shall be fused combination type minimum NEMA Size 1, and conform to appropriate NEMA standards for the service required. Provide NEMA type 3R/12 gasketed enclosures in wet locations. Provide all starters with appropriately sized overload protection and heater strips provided in each phase, hand/off auto switches, a minimum of 2 NO and NC auxiliary contacts as required, and an integral disconnecting means. For 1/2 horsepower motors and below, when control equipments do not dictate the use of a starter, a manual motor starter switch with overload protection in each phase may be provided. Acceptable manufacturers are Allen Bradley, General Electric, Square D, Furnas and Cutler Hammer.

M. Duct smoke detectors shall be installed by mechanical contractor and provided and wired by electrical contractor.

1.19 CLEANING OF MATERIAL AND EQUIPMENT

A. All installed material and equipment shall be thoroughly cleaned. Material and equipment which is to be painted shall be cleaned of cement, plaster, grease, oil and other foreign substances. All pasted paper labels shall be removed.

1.20 CLEAN-UP

A. Upon completion of the work, the Contractor shall remove from the premises all surplus material, rubbish and debris resulting from his operation. The premises shall be left in a clean and neat condition.

1.21 GUARANTEE

A. In addition to the guarantees required in the General Conditions, all materials and equipment furnished and/or installed under Division 23 Sections shall be guaranteed

for a period of one year from the date of formal acceptance of the work by the Owner. Should any trouble develop during this period due to defective materials or faulty workmanship, the Contractor shall furnish all necessary labor and materials to correct the trouble without any additional cost to the Owner. Any defective materials or inferior workmanship noticed at the time of installation and/or during the guarantee period shall be corrected immediately to the satisfaction of the Owner and the Architect. HVAC contractors shall respond to a service call request during guarantee period, within forty-eight (48) hours during a regular working week.

1.22 SUMMARY OF SUBMITTALS

A. The following items shall be submitted to the Architect per timeline outlined in Division 1 after the scheduled Start of Construction for review for compliance with the Contract Documents.

1. Complete data of proposed substitutions.

2. Complete data of "equivalent equipment".

3. Air conditioning unit performance data.

4. Split system Heat Pump performance data.

5. Exhaust fan performance data.

6. Control diagrams.

7. Diffusers, Registers and Grilles.

8. ¼" scale shop drawings of complete HVAC system layout.

B. The following items shall be submitted to the Architect prior to formal acceptance of the work by the Owner:

1. HVAC test and balance report.

2. HVAC guarantee

PART 2 PRODUCTS

(NOT APPLICABLE)

PART 3 EXECUTION

(NOT APPLICABLE)

END OF SECTION

SECTION 23 05 10
GENERAL MECHANICAL MATERIALS

PART 1 GENERAL

1.01 SECTION INCLUDES

A. Section 23 05 00, General Mechanical Requirements, insofar as it is applicable to this Section and unless otherwise herein specified.

PART 2 PRODUCTS

2.01 PIPING

A. Piping shall be of materials and grades hereinafter specified in the following Sections:

1. Section 23 70 00, HVAC Systems.

2.02 PIPE JOINTS

A. Screwed Steel Pipe Joints

1. Pipe Joint Compound: Hercules "Pro-Dope", lead-free.

2. Cleanout Plug Compound: Hercules "Pro-Dope", lead-free.

B. Flanged Steel Pipe Joints: Garlock 7797, 1/16" thick, 250 °F neoprene gasket.

C. Soldered Copper Pipe Joints

1. Piping Buried Under Buildings: Harris "Stay-Silv 5" brazing alloy with 5% silver, 89% copper and 6% phosphorous.

2. All Other Piping: Engelhard "Silvabrite 100" lead-free solder with 95.5% tin, 4% copper and .5% silver.

2.03 UNIONS

A. Steel Piping, 2" and Smaller: Stockham 794, 250# screwed malleable iron union with bronze to iron ground joint, galvanized or black to match the piping specifications.

B. Steel piping, 2-1/2" and Larger: 125# screwed cast iron companion flanges, galvanized or black to match the piping specifications.

C. Copper Piping, 2" and Smaller: Mueller C-107, 150# soldered cast brass union with ground joint.

D. Copper Piping, 2-1/2" and Larger: 125# soldered cast brass companion flanges.

2.04 DIELECTRIC UNIONS

A. 1-1/2" and Smaller: EPCO Type PXS, 250#, 200 °F brass screwed to copper solder joint with No. 2 gasket.

B. 2" and Larger: PSI Standard "Gask-O-Seal", Type E, 150#, 180 °F insulation flange set with polyethylene one-piece sleeve and washer; set installed between 125# soldered cast brass flange and 125# screwed cast brass flange.

C. Dielectric unions shall be provided at all connections of copper piping and ferrous (steel, iron piping).

2.05 PIPE HANGERS, SUPPORTS AND ATTACHMENTS

A. Rod Pipe Hangers: Tolco Fig. 1 adjustable steel clevis hanger with Fig. 100 threaded rod and lock nuts, suspended from pipe hanger attachment. At Contractor's option, hanger may be Tolco Fig. 3 J-hanger with Fig. 100 threaded rod and lock nuts, suspended from pipe hanger attachment.

B. Trapeze Pipe Hangers: Tolco Tolstrut Fig. RIGD galvanized pipe clamps inserted in Fig. A-12P 12 gauge 1-5/8" x 1-5/8" galvanized channel with 9/16" bolt holes, two Fig. 100 1/2" threaded rods with lock nuts; channel suspended from pipe hanger attachment.

C. Pipe Hanger Attachment, Wood Construction

1. Pipe, 2" and Smaller: Tolco Fig. 50 steel angle bracket, fastened with 3/8" bolt and nut with washer at both ends.

2. Pipe, 2-1/2" through 6": Tolco Fig. 50 steel angle bracket, fastened with 1/2" bolt and nut with washers at both ends.

3. 8" Pipe: Tolco Fig. 50 steel angle bracket, fastened with 5/8" bolt and nut with washer at both ends.

D. Pipe Hanger Attachment, Steel Construction: Tolco Fig. 64 beam C-clamp with lock nut and Fig. 69 retaining strap with lock nut installed under strap.

E. Wall Pipe Support: Tolco Tolstrut Fig. RIGD galvanized pipe clamps inserted in Fig. A-12P 12 gauge 1-5/8" x 1-5/8" galvanized channel with 9/16" bolt holes. In wood construction, channel shall be fastened with two 1/2" bolts and nuts with washers at both ends. In masonry and concrete construction, channel shall be fastened with two Phillips "Red Head" JS-12C 1/2" steel stud anchors with nuts and washers; concrete fill shall be used in hollow block walls at stud anchors.

F. Vertical Pipe Risers at Floor Levels: Tolco Fig. 6 riser clamp.

G. Roof Pipe Support: Tolco Tolstrut Fig. RIGD galvanized pipe clamp inserted in Fig. A-12P 12 gauge 1-5/8" x 1-5/8" galvanized channel with 9/16" bolt holes. Channel shall be fastened to a 4" x 4" redwood sleeper with two galvanized 1/2" x 2-1/2"lag screws with washers. Sleeper shall be attached to the roof with Henry 204 non-hardening, non-running plastic roof cement; after installation, the sleeper and the adjoining roof shall be covered with Henry 181 fiberglass reinforcing fabric, saturated with Henry 204 roof cement.

H. Equivalent: Secur Strut, Superstrut.

I. See details on plans for additional information.

2.06 STRAINERS

A. Strainers shall be Y type with semi-steel body and stainless steel screen with perforations to suit service requirements. Strainers shall be pipe size.

B. 2" and Smaller: Metraflex SM Series, 250# screwed body with screwed cap.

C. Strainers shall be provided with Chicago 293-LF 1/2" brass body blow-off hose bibb with 3/4" hose end.

D. Equivalent: Mueller, Watts.

2.07 PIPE SLEEVES

A. Sleeves shall be provided for all piping passing through foundations, walls and floors; however, sleeves are not required for sewer piping passing through concrete floors on grade.

B. Sleeves shall be provided also under walks, covered passages and elsewhere as indicated or required by local codes.

C. Wall Sleeves

1. Sleeves shall be R. K. Industries 24 gauge galvanized sheet metal assemblies with telescopic sleeves and square base plates.

2. Sleeves shall have the inside diameter 1 in. larger than the outside diameter of the passing pipe or insulated pipe.

3. For soundproof walls, the annular sleeve space shall be packed with 3/4 lb./cft. density fiberglass insulation concealed at both sides of the wall with cast brass split flange escutcheons with set screw.

4. For fire rated walls, the annular sleeve space shall be filled at each end with 1" thick 3M Model CP-25 U.L. listed caulking (SFM listing 4485-941:100). Caulking shall be protected at both sides of the wall with cast brass split flange escutcheons with set screw.

D. Roof Sleeves

1. Sleeves shall be R.K. Industries 24 gauge galvanized sheet metal assemblies with telescopic sleeves and square base plates.

2. Sleeves shall have the inside diameter 1 in. larger than the outside diameter of the passing pipe or insulated pipe.

3. Sleeves shall be used for fire rated roofs only with the annular space filled at each end with 1" thick 3M Model CP-

25N/S U.L. listed caulking (SFM listing 4485-941:101). Caulking shall be protected at the underside with cast brass split flange escutcheon with set screw.

2.08 ACCESS PANELS

A. Fire Rated Panels: Elmdor FR-CL Series U.L. Listed 1-1/2 hr. prime coat finished steel access panel with 16 gauge frame with wall flange and 16 gauge hinged door with positive spring closer and cylinder lock.

B. Non-Rated Panels

1. Tile and Terrazzo Walls: Elmdor DW-SS-AKL Series stainless steel access panel with 16 gauge frame with wall flange and 16 gauge hinged door with Allen key lock.

2. Walls without Tile and Terrazzo: Elmdor DW-AKL Series prime coat finished steel access panel with 16 gauge frame with wall flange and 16 gauge hinged door with Allen key lock.

3. Ceilings: Elmdor DW-AKL Series prime coat finished steel access panel with 16 gauge frame with wall flange and 16 gauge hinged door with Allen key lock.

C. Equivalent: Milcor, Karp.

D. Access panels shall be of adequate size for the intended purpose, but in any case not less than 12" x 12" size.

E. Access doors shall match the wall or ceiling finish and fire rating as indicated on the Architectural drawings. 16-gauge steel frame and door with paintable finish, except in restrooms where doors shall be stainless steel with satin finish.

PART 3 EXECUTION

3.01 PIPING INSTALLATION

A. A union shall be installed on one side of each screwed valve, at all connections to automatic valves, at equipment connections and elsewhere as indicated or required.

B. Dielectric unions shall be provided at all connections of copper piping and ferrous (steel, iron) piping.

C. Piping shall be seismically braced in accordance with the Guidelines for Seismic Restraints of Mechanical Systems and Plumbing Piping Systems published by S.M.A.C.N.A. and P.P.I.C., and approved by the District of the State Architect, Structural Safety Section. Prior to Start of Construction, the Contractor shall provide a new copy of the Seismic Guidelines to the Inspector for use during the construction.

D. Unless otherwise indicated, piping shall be firmly held in place by specified hangers and supports.

E. Unless otherwise hereinafter specified, piping 1-1/4" and larger

shall be supported every 10 ft. and piping 1" and smaller shall be supported every 8 ft.

F. Branches with lengths in excess of 6 ft. shall have separate hangers and supports.

G. Powder actuated tools shall not be used.

H. Steel construction fireproofing damaged by the pipe hanger attachment installation shall be repaired to the satisfaction of the Architect.

I. Pipe lines shall be constructed of full length sections of specified pipe except where length of run is less than full pipe length.

J. Pipe runs shall be straight and true and piping shall be installed in such a manner as to prevent any undue strain on piping or the equipment and as to prevent any unusual noise at normal flow.

K. Cut pipe ends shall be thoroughly reamed to remove all burrs.

L. Pipe runs and connections shall be made so as to insure unrestricted flow and prevention of air pockets.

M. Unless otherwise indicated or required, piping shall be concealed in finished portions of the buildings.

N. Unless otherwise hereinafter specified, polished chrome plated cast brass hinged split flanged escutcheons with set screw shall be provided at all points where pipes pierce finished surfaces.

O. Unless specifically permitted by the Structural Engineer, piping shall clear beams, columns and other structural members.

P. Plated, polished or enameled connections to equipment shall not show tool marks or threads and shall be supported by neat plated hangers and supports.

Q. Piping shall be capped or plugged to exclude dirt until final connections are made.

R. Pipe size reductions shall be made with reducing fittings. Welding saddles and welding nipples may be used for branch lines at least two pipe sizes smaller than the pipe run; for a cross configuration, the branch lines must be at least three pipe sizes smaller than the pipe run.

S. Close nipples, bushings, street elbows and bullheaded tees shall <u>not</u> be used.

T. Except where valve location makes their use obvious, all valves shall be labeled with securely attached 2 in. diameter metal or plastic tags.

U. Pipe welding shall be performed by a certified welder; certificate shall be issued by a laboratory acceptable to the Architect.

V. Concrete floors, concrete walls and masonry walls shall be cored.

3.02 GENERAL INSTALLATION

A. Access panels shall be provided for all concealed mechanical material and equipment which requires periodic maintenance, adjustment or inspection, such as valves, volume dampers, fire dampers, smoke/fire dampers, control boxes and controls. All access doors must provide easy access to equipment, capable of unobstructed opening to 180-swing. Access for passage must be a minimum of 30"x30".

3.03 EQUIPMENT ANCHORING

A. All mechanical equipment shall be anchored.

B. Anchorage shall comply with California Code of Regulations (CCR), Title 24, 2019 California Building Code.

3.04 TESTS

A. Tests shall be performed by the Contractor to the satisfaction of the Architect. Tests shall be made in the presence of, and at a time suitable to, the Architect. The tests shall be as hereinafter specified.

B. The Contractor shall furnish all necessary material, equipment and labor required for the tests. Cost of tests, replacement of faulty parts and/or expenses involved in damages resulting from the tests is a part of this Contract.

C. Hydrostatic tests shall be made by completely filling the piping system with water and eliminating all accumulations of air so that leakage, no matter how small, will be apparent on the test gauge. Pressure shall be maintained until all piping has been examined, but in any case not less than one hour.

END OF SECTION

SECTION 23 05 93
HVAC AIR BALANCING

PART 1 GENERAL

1.01 SECTION INCLUDES

A. Section 23 05 00, General Mechanical Requirements, insofar as they are applicable to this Section, and unless otherwise hereinafter specified.

B. Combined efforts of the HVAC Contractor and the Air Balance Contractor resulting in HVAC Systems which are complete, tested and ready for use.

1.02 AIR BALANCE CONTRACTOR

A. The HVAC air balancing shall be performed by an Air Balance Contractor who:

1. is independent from any HVAC Contractor, Equipment Manufacturer or Equipment Service Organization.

2. has been in independent air balance business in the State of California for a period of at least five (5) years.

3. is a member of the Associated Air Balance Council (AABC) or is an independent NEBB certified test and balance company.

B. Air Balance Contractors meeting the specified requirements are:

1. Air Balance Co., Fullerton, phone (714) 773-4777

2. Penn Air Control, Cypress, phone (714) 220-9091

3. San Diego Air Balance Co., Fullerton, phone (714) 870-0457 (760) 741-5401

4. American Air Balance Co., Anaheim, phone (714) 693-3700

5. Associated Air Balance, Inc., Azusa, phone (626) 915-8117.

C. Within thirty-five (35) calendar days after the Scheduled Start of Construction, the HVAC Contractor shall submit to the Architect the name of one of the above Air Balance Contractors he proposes to use for this project. Should the HVAC Contractor neglect to submit the Air Balance Contractor's name within the specified time limit, the Air Balance Contractor will be selected by the Architect with the cost of the Air Balance Contractor's services remaining the responsibility of the HVAC Contractor.

PART 2 PRODUCTS

(NOT APPLICABLE)

PART 3 EXECUTION

3.01 HVAC CONTRACTOR'S RESPONSIBILITIES

A. Prior to the start of the HVAC system construction, the HVAC Contractor shall review the HVAC system layout with the Air Balance Contractor for the purpose of discussing the procedures of duct pressure testing and HVAC system balancing.

B. Upon completion of rigid duct work installation, but prior to connecting the duct work to the HVAC equipment and to the air distribution equipment, the HVAC Contractor shall cap duct work at all openings and shall notify the Air Balance Contractor that the duct work is ready for pressure testing.

C. After completion of duct pressure testing, the HVAC Contractor shall seal the duct work permanently and shall complete the HVAC system installation, including all belt drive alignment, furnishing and installation of clean filters and general HVAC equipment clean-up.

D. Upon completion of HVAC system installation, the HVAC Contractor shall notify the Air Balance Contractor that the HVAC system is ready for air balancing.

E. During and after the air balancing, the HVAC Contractor shall assist the Air Balancing Contractor and shall do all remedial work requested by the Air Balance Contractor. Cost of remedial work is part of HVAC Contractor's responsibilities.

F. Remedial work also includes furnishing and installation of new drives (adjustable motor pulleys and belts), if the required air deliveries cannot be achieved with the factory furnished drives.

3.02 AIR BALANCE CONTRACTOR'S RESPONSIBILITIES

A. Prior to the start of the HVAC system construction, the Air Balance Contractor shall review the HVAC system layout with the HVAC Contractor for the purpose of discussing the procedures of duct pressure testing and HVAC system balancing.

B. During the HVAC system installation, the Air Balance Contractor shall make two (2) visits to the construction site to observe the duct construction and the location and accessibility to volume dampers; upon completion of each visit, the Air Balancing Contractor shall send the Architect a written report.

C. Upon completion of rigid duct work installation and after the duct work has been capped by the HVAC Contractor, the Air Balance Contractor shall pressure test the following duct work with 1.5 in. W.C. air pressure:

1. All supply duct work.

2. All return duct work.

3. All exhaust duct work with the exception of duct work connected to ceiling exhaust fans and in-line exhaust fans.

4. Transfer duct work and relief air duct work is exempt from pressure testing.

D. Air pressure loss during the test shall not exceed one (1) percent of the design capacity of the system. Upon completion of the pressure tests, two (2) copies of the report shall be delivered by the Air Balance Contractor DIRECTLY to the Mechanical Engineer.

E. Upon completion of the HVAC system installation, the Air Balance Contractor shall make a third visit for the purpose of air balancing of the HVAC systems.

F. The air balancing shall be performed by the Air Balance Contractor in accordance with the National Standards for Field Measurements and Instrumentation published by the Associated Air Balance Council (AABC).

G. Final air deliveries shall be within 10 percent above and 5 percent below the specified values.

H. The Air Balance Contractor shall check whether individual zone thermostats control the corresponding equipment.

I. Any irregularities encountered by the Air Balance Contractor shall be reported to the HVAC Contractor for rectification; items requiring engineering assistance shall be reviewed with the Mechanical Engineer prior to the presentation of the final Test and Balance Report.

J. The Air Balance Contractor shall test and balance the HVAC systems in the presence of the HVAC Contractor in order to assure proper performance of all system components.

K. After the air balancing completion, the Architect will have the right to request the Air Balance Contractor to make one (1) additional visit to the job site, should the corrective measures to the HVAC system result in substantial changes of the system performance; the Architect will determine whether such conditions prevail.

3.03 TEST AND BALANCE REPORT

A. The Air Balance Contractor shall submit to the Architect four (4) copies of the Test and Balance Report including the Air Balance Contractor's prepared key plan with proper identification and location of all HVAC components. Direct reproduction of the Contract Drawings shall not be used.

B. Test and Balance Report shall include both specified and actual values for all equipment.

C. For three phase motors, power consumption shall be reported for all three legs.

D. Test and Balance Report shall include air temperatures where applicable.

E. Upon completion of the Test and Balance Report, but before final review of the HVAC work by the Mechanical Engineer, one (1) copy of the Test and Balance Report shall be delivered by the Air Balance Contractor directly to the Mechanical Engineer.

END OF SECTION

SECTION 23 09 23
DIRECT DIGITAL CONTROL

PART 1 GENERAL

1.01 RELATED DOCUMENTS

A. Drawings and general provisions of the Contract, including General and Supplementary Conditions and Division 01 Specification Sections, apply to this Section.

1.02 SUMMARY

A. Section Includes:

1. DDC system for monitoring and controlling of HVAC systems.
2. Delivery of selected control devices to equipment and systems manufacturers for factory installation and to HVAC systems installers for field installation.

1.03 DEFINITIONS

A. Algorithm: A logical procedure for solving a recurrent mathematical problem. A prescribed set of well-defined rules or processes for solving a problem in a finite number of steps.

B. Analog: A continuously varying signal value, such as current, flow, pressure, or temperature.

C. BACnet Specific Definitions:

1. BACnet: Building Automation Control Network Protocol, ASHRAE 135. A communications protocol allowing devices to communicate data over and services over a network.
2. BACnet Interoperability Building Blocks (BIBBs): BIBB defines a small portion of BACnet functionality that is needed to perform a particular task. BIBBs are combined to build the BACnet functional requirements for a device.
3. BACnet/IP: Defines and allows using a reserved UDP socket to transmit BACnet messages over IP networks. A BACnet/IP network is a collection of one or more IP subnetworks that share the same BACnet network number.
4. BACnet Testing Laboratories (BTL): Organization responsible for testing products for compliance with ASRRAE 135, operated under direction of BACnet International.
5. PICS (Protocol Implementation Conformance Statement): Written document that identifies the particular options specified by BACnet that are implemented in a device.

D. Binary: Two-state signal where a high signal level represents ON” or “OPEN” condition and a low signal level represents “OFF” or “CLOSED” condition. “Digital” is sometimes used interchangeably with “Binary” to indicate a two-state signal.

E. Controller: Generic term for any standalone, microprocessor-based, digital controller residing on a network, used for local or global control. Three types of controllers are indicated: Network Controller, Programmable Application Controller, and Application-Specific Controller.

F. Control System Integrator: An entity that assists in expansion of existing enterprise system and support of additional operator interfaces to I/O being added to existing enterprise system.

G. COV: Changes of value.

H. DDC System Provider: Authorized representative of, and trained by, DDC system manufacturer and responsible for execution of DDC system Work indicated.

I. Distributed Control: Processing of system data is decentralized and control decisions are made at subsystem level. System operational programs and information are provided to remote subsystems and status is reported back. On loss of communication, subsystems shall be capable of operating in a standalone mode using the last best available data.

J. DOCSIS: Data-Over Cable Service Interface Specifications.

K. E/P: Voltage to pneumatic.

L. Gateway: Bidirectional protocol translator that connects control systems that use different communication protocols.

M. HLC: Heavy load conditions.

N. 1/O: System through which information is received and transmitted. I/O refers to analog input (Al), binary input (BI), analog output (A0) and binary output (BO). Analog signals are continuous and represent control influences such as flow, level, moisture, pressure, and temperature. Binary signals convert electronic signals to digital pulses (values) and generally represent two-position operating and alarm status. “Digital,” (DI and (DO), is sometimes used interchangeably with “Binary,” (BI) and (BO), respectively.

0. I/P: Current to pneumatic.

P. LAN: Local area network.

Q. Low Voltage: As defined in CEC for circuits and equipment operating at less than 50 V or for remote-control, signaling power-limited circuits.

R. Modbus TCP/IP: An open protocol for exchange of process data.

S. MS/TP: Master-slave/token-passing, lEE 8802-3. Datalink protocol LAN option that uses

twisted-pair wire for low-speed communication.

T. MTBF: Mean time between failures.

U. Network Controller: Digital controller, which supports a family of programmable application controllers and application-specific controllers, that communicates on peer-to-peer network for transmission of global data.

V. Network Repeater: Device that receives data packet from one network and rebroadcasts it to another network. No routing information is added to protocol.

W. PDA: Personal digital assistant.

X. Peer to Peer: Networking architecture that treats all network stations as equal partners.

Y. POT: Portable operator's terminal,

Z. PUE: Performance usage effectiveness.

AA. RAM: Random access memory.

BB. RF: Radio frequency.

CC. Router: Device connecting two or more networks at network layer.

DD. Server: Computer used to maintain system configuration, historical and programming database.

EE. TCP/IP: Transport control protocol/Internet protocol incorporated into Microsoft Windows.

FF. UPS: Uninterruptible power supply.

GG. USB: Universal Serial Bus.

HH. User Datagram Protocol (UDP): This protocol assumes that the IP is used as the underlying protocol.

JI. VAV: Variable air volume.

JJ. WLED: White light emitting diode.

1.4 PRE-INSTALLATION MEETINGS

A. Preinstallation Conference: Conduct conference at Atascadero High School.

1.5 ACTION SUBMITTALS

A. Multiple Submissions:

1. If multiple submissions are required to execute work within schedule, first submit a coordinated schedule clearly defining intent of multiple submissions. Include a proposed date of each submission with a detailed description of submittal content to be included in each submission.
2. Clearly identify each submittal requirement indicated and in which submission the information will be provided.
3. Include an updated schedule in each subsequent submission with changes highlighted to easily track the changes made to previous submitted schedule.

B. Product Data: For each type of product include the following:

1. Construction details, material descriptions, dimensions of individual components and profiles, and finishes.
2. Operating characteristics, electrical characteristics, and furnished accessories indicating process operating range, accuracy over range, control signal over range, default control signal with loss of power, calibration data specific to each unique application, electrical power requirements, and limitations of ambient operating environment, including temperature and humidity.
3. Product description with complete technical data, performance curves, and product specification sheets.
4. Installation, operation and maintenance instructions including factors effecting performance.
5. Bill of materials of indicating quantity, manufacturer, and extended model number for each unique product.

    a. Operator workstations.
    b. Servers.
    c. Printers.
    d. Gateways.
    e. Routers.
    f. Protocol analyzers.
    g. DDC controllers.
    h. Enclosures.
    i. Electrical power devices.
    j. UPS units.
    k. Accessories.
    1. Instruments.
    m. Control dampers and actuators.
    n. Control valves and actuators.

6. When manufacturer’s product datasheets apply to a product series rather than a specific product model, clearly indicate and highlight only applicable information.
7. Each submitted piece of product literature shall clearly cross reference specification and drawings that submittal is to cover.

C. Software Submittal:

1. Cross-referenced listing of software to be loaded on each operator workstation, server, gateway, Johnson and DDC controller.
2. Description and technical data of all software provided, and cross-referenced to products in which software will be installed.
3. Operating system software, operator interface and programming software, color graphic software, DDC controller software, maintenance management software, and third-party software.
4. Include a flow diagram and an outline of each subroutine that indicates each program variable name and units of measure.
5. Listing and description of each engineering equation used with reference source.
6. Listing and description of each constant used in engineering equations and a reference source to prove origin of each constant.
7. Description of operator interface to alphanumeric and graphic programming.
8. Description of each network communication protocol.
9. Description of system database, including all data included in database, database capacity and limitations to expand database.
10. Description of each application program and device drivers to be generated, including specific information on data acquisition and control strategies showing their relationship to system timing, speed, processing burden and system throughout.
11. Controlled Systems: Instrumentation list with element name, type of device, manufacturer, model number, and product data. Include written description of sequence of operation including schematic diagram.

D. Shop Drawings:

1. General Requirements:

    a. Include cover drawing with Project name, location, Owner, Architect, Contractor and issue date with each Shop Drawings submission.
    b. Include a drawing index sheet listing each drawing number and title that matches information in each title block.
    c. Prepare Drawings using CAD.
    d. Drawings Size: 36”x24”.

2. Include plans, elevations, sections, and mounting details where applicable.
3. Include details of product assemblies. Indicate dimensions, weights, loads, required clearances, method of field assembly, components, and location and size of each field connection.
4. Detail means of vibration isolation and show attachments to rotating equipment.
5. Plan Drawings indicating the following:

a. Screened backgrounds of walls, structural grid lines, HVAC equipment, ductwork and piping.
b. Room names and numbers with coordinated placement to avoid interference with control products indicated.
c. Each desktop operator workstation, server, gateway, router, DDC controller, control panel instrument connecting to DDC controller, and damper and valve connecting to DDC controller, if included in Project.
d. Exact placement of products in rooms, ducts, and piping to reflect proposed installed condition.
e. Network communication cable and raceway routing.
f. Information, drawn to scale.
g. Proposed routing of wiring, cabling, conduit, and tubing, coordinated with building services for review before installation.

6. Schematic drawings for each controlled HVAC system indicating the following:

a. 110 points labeled with point names shown. Indicate instrument range, normal operating set points, and alarm set points. Indicate fail position of each damper and valve, if included in Project.
b. I/O listed in table format showing point name, type of device, manufacturer, model number, and cross-reference to product data sheet number.
c. A graphic showing location of control I/O in proper relationship to HVAC system.
d. Wiring diagram with each I/O point having a unique identification and indicating labels for all wiring terminals.
e. Unique identification of each I/O that shall be consistently used between different drawings showing same point.
f. Elementary wiring diagrams of controls for HVAC equipment motor circuits including interlocks, switches, relays and interface to DDC controllers.
g. Narrative sequence of operation.
h. Graphic sequence of operation, showing all inputs and output logical blocks.

7. Control panel drawings indicating the following:

a. Panel dimensions, materials, size, and location of field cable, raceways, and tubing connections.
b. Interior subpanel layout, drawn to scale and showing all internal components, cabling and wiring raceways, nameplates and allocated spare space.
c. Front rear, and side elevations and nameplate legend.
d. Unique drawing for each panel.

8. DDC system network riser diagram indicating the following:

a. Each device connected to network with unique identification for each.

b. Interconnection of each different network in DDC system.
c. For each network, indicate communication protocol, speed and physical means of interconnecting network devices, such as copper cable type, or fiber-optic cable type. Indicate raceway type and size for each.
d. Each network port for connection of an operator workstation or other type of operator interface with unique identification for each.

9. DDC system electrical power riser diagram indicating the following:

a. Each point of connection to field power with requirements (volts/phase//hertz/amperes/connection type) listed for each.
b. Each control power supply including, as applicable, transformers, power-line conditioners, transient voltage suppression and high filter noise units, DC power supplies, and UPS units with unique identification for each.
c. Each product requiring power with requirements (volts/phase//hertz/amperes/connection type) listed for each.
d. Power wiring type and size, race type, and size for each.

10. Monitoring and control signal diagrams indicating the following:

a. Control signal cable and wiring between controllers and I/O.
b. Point-to-point schematic wiring diagrams for each product.
c. Control signal tubing to sensors, switches and transmitters.
d. Process signal tubing to sensors, switches and transmitters.

11. Color graphics indicating the following:

a. Itemized list of color graphic displays to be provided.
b. For each display screen to be provided, a true color copy showing layout of pictures, graphics and data displayed.
c. Intended operator access between related hierarchical display screens.

E. System Description:

1. Full description of DDC system architecture, network configuration, operator interfaces and peripherals, servers, controller types and applications, gateways, routers and other network devices, and power supplies.
2. Complete listing and description of each report, log and trend for format and timing and events which initiate

generation.

3. System and product operation under each potential failure condition including, but not limited to, the following:

    a. Loss of power.
    b. Loss of network communication signal.
    c. Loss of controller signals to inputs and outpoints.
    d. Operator workstation failure.
    e. Server failure.
    f. Gateway failure.
    g. Network failure
    h. Controller failure.
    i. Instrument failure.
    j. Control damper and valve actuator failure.

4. Complete bibliography of documentation and media to be delivered to Owner.
5. Description of testing plans and procedures.
6. Description of Owner training.

F. Delegated-Design Submittal: For DDC system products and installation indicated as being delegated.

1. Supporting documentation showing DDC system design complies with performance requirements indicated, including calculations and other documentation necessary to prove compliance.
2. Schedule and design calculations for control dampers and actuators.

    a. Flow at Project design and minimum flow conditions.
    b. Face velocity at Project design and minimum airflow conditions.
    c. Pressure drop across damper at Project design and minimum airflow conditions.
    d. AMCA 500-D damper installation arrangement used to calculate and schedule pressure drop, as applicable to installation.
    e. Maximum close-off pressure.
    f. Leakage airflow at maximum system pressure differential (fan close-off pressure).
    g. Torque required at worst case condition for sizing actuator.
    h. Actuator selection indicating torque provided.
    i. Actuator signal to control damper (on, close or modulate).
    j. Actuator position on loss of power.
    k. Actuator position on loss of control signal.

3. Schedule and design calculations for control valves and actuators.

a. Flow at Project design and minimum flow conditions.
b. Pressure-differential drop across valve at Project design flow condition.
c. Maximum system pressure-differential drop (pump close-off pressure) across valve at Project minimum flow condition.
d. Design and minimum control valve coefficient with corresponding valve position.
e. Maximum close-off pressure.
f. Leakage flow at maximum system pressure differential.
g. Torque required at worst case condition for sizing actuator.
h. Actuator selection indicating torque provided.
i. Actuator signal to control damper (on, close or modulate).
j. Actuator position on loss of power.
k. Actuator position on loss of control signal.

4. Schedule and design calculations for selecting flow instruments.

a. Instrument flow range.
b. Project design and minimum flow conditions with corresponding accuracy, control signal to transmitter and output signal for remote control.
a. Extreme points of extended flow range with corresponding accuracy, control signal to transmitter and output signal for remote control.
d. Pressure-differential loss across instrument at Project design flow conditions.
e. Where flow sensors are mated with pressure transmitters, provide information for each instrument separately and as an operating pair.

1.06 INFORMATIONAL SUBMITTALS

A. Coordination Drawings:

Plan drawings and corresponding product installation details, drawn to scale, on which the following items are shown and coordinated with each other, using input from installers of the items involved:

a. Product installation location shown in relationship to room, duct, pipe and equipment.
b. Structural members to which products will be attached.
c. Wall-mounted instruments located in finished space showing relationship to light switches, fire-alarm devices and other installed devices.
d. Size and location of wall access panels for products installed behind walls and requiring access.

2. Reflected ceiling plans and other details, drawn to scale, on which the following items are shown and coordinated with

each other, using input from installers of the items involved:

a. Ceiling components.
b. Size and location of access panels for products installed above inaccessible ceiling assemblies and requiring access.
c. Items penetrating finished ceiling including the following:

1) Lighting fixtures.
2) Air outlets and inlets.
3) Speakers.
4) Sprinklers.
5) Access panels.
6) Motion sensors.
7) Pressure sensors.
8) Temperature sensors and other DDC control system instruments.

B. Qualification Data:

1. Systems Provider Qualification Data:

a. Resume of project manager assigned to Project.
b. Resumes of application engineering staff assigned to Project.
c. Resumes of installation and programming technicians assigned to Project.
d. Resumes of service technicians assigned to Project.
e. Brief description of past project including physical address, floor area, number of floors, building system cooling and heating capacity and building's primary function.
f. Description of past project DDC system, noting similarities to Project scope and complexity indicated.
g. Names of staff assigned to past project that will also be assigned to execute work of this Project.
h. Owner contact information for past project including name, phone number, and email address.
i. Contractor contact information for past project including name, phone number, and e-mail address.
j. Architect contact information for past project including name, phone number, and e-mail address.

2. Manufacturer’s qualification data.
3. Testing agency’s qualifications data.

C. Welding certificates.

D. Product Certificates:

1. Data Communications Protocol Certificates: Certifying that each proposed DDC system component complies with ASHRAE 135.

B. Product Test Reports: For each product that requires testing to be performed by Johnson.

F. Preconstruction Test Reports: For each separate test performed.

G. Source quality-control reports.

H. Field quality-control reports.

I. Sample Warranty: For manufacturer's, warranty.

1.07 CLOSEOUT SUBMITTALS

A. Operation and Maintenance Data: For DDC system to include in emergency, operation and maintenance manuals.

Include the following:

a. Project Record Drawings of as-built versions of submittal Shop Drawings provided in electronic PDF format.
b. Testing and commissioning reports and checklists of completed final versions of reports, checklists, and trend logs.
c. As-built versions of submittal Product Data.
d. Names, addresses, e-mail addresses and 24-hour telephone numbers of Installer and service representatives for DDC system and products.
e. Operator's manual with procedures for operating control systems including logging on and off, handling alarms, producing point reports, trending data, overriding computer control and changing set points and variables.
f. Programming manuals with description of programming language and syntax, of statements for algorithms and calculations used, of point database creation and modification, of program creation and modification, and of editor use.
g. Engineering, installation, and maintenance manuals that explain how to:

    1) Design and install new points, panels, and other hardware.
    2) Perform preventive maintenance and calibration.
    3) Debug hardware problems.
    4) Repair or replace hardware.

h. Documentation of all programs created using custom programming language including set points, tuning parameters, and object database.
i. Backup copy of graphic files, programs, and database on electronic media such as DVDs.
j. List of recommended spare parts with part numbers and suppliers.
k. Complete original-issue documentation, installation, and

maintenance information for furnished third-party hardware including computer equipment and sensors.

1. Complete original-issue copies of furnished software, including operating systems, custom programming language, operator workstation software, and graphics software.

m. Licenses, guarantees, and warranty documents.

n. Recommended preventive maintenance procedures for system components, including schedule of tasks such as inspection, cleaning, and calibration; time between tasks; and task descriptions.

o. Owner training materials.

1.08 MAINTENANCE MATERIAL SUBMITTALS

A. Furnish extra materials and parts that match products installed and that are packaged with protective covering for storage and identified with labels describing contents.

B. Include product manufacturers' recommended parts lists for proper product operation over four year period following warranty period. Parts list shall be indicated for each year.

C. Furnish parts, as indicated by manufacture's recommended parts list, for product operation during one year period following warranty period.

D. Furnish quantity indicated of matching product(s) in Project inventory for each unique size and type per control drawings.

1.09 QUALITY ASSURANCE

A. DDC System Manufacturer Qualifications:

1. Nationally recognized manufacturer of DDC systems and products.
2. DDC systems with similar requirements to those indicated for a continuous period of five years within time of bid.
3. DDC systems and products that have been successfully tested and in use on at least three past projects.
4. Having complete published catalog literature, installation, operation and maintenance manuals for all products intended for use.
5. Having full-time in-house employees for the following:

a. Product research and development.

b. Product and application engineering.

a. Product manufacturing, testing and quality control.

d. Technical support for DDC system installation training, commissioning and troubleshooting of installations.

e. Owner operator training.

B. DDC System Provider Qualifications:

1. Authorized representative of, and trained by, DDC system manufacturer.
2. In-place facility located within 200 miles of Project.
3. Demonstrated past experience with installation of DDC system products being installed for period within three consecutive years before time of bid.
4. Demonstrated past experience on five projects of similar complexity, scope and value.
5. Each person assigned to Project shall have demonstrated past experience.
6. Staffing resources of competent and experienced full-time employees that are assigned to execute work according to schedule.
7. Service and maintenance staff assigned to support Project during warranty period.
8. Product parts inventory to support on-going DDC system operation for a period of not less than 5 years after Substantial Completion.
9. DDC system manufacturer's backing to take over execution of Work if necessary to comply with requirements indicated. Include Project-specific written letter, signed by manufacturer's corporate officer, if requested.

C. Testing Agency Qualifications: Member Company of NETA or an NRTL.

1. Testing Agency's Field Supervisor: Certified by NETA to supervise on-site testing.

D. Welding Qualifications: Qualify procedures and personnel according to the following:

1. AWS D1.1/D1.1M, "Structural Welding Code - Steel."
2. AWS D1.2/Dl.2M, "Structural Welding Code - Aluminum."
3. AWS D1.3/D1.3M, "Structural Welding Code - Sheet Steel."
4. AWS Dl.4/D1.4M, "Structural Welding Code - Reinforcing Steel."

E. Pipe and Pressure-Vessel Welding Qualifications: Qualify procedures and operators according to ASME Boiler and Pressure Vessel Code.

F. Mockups: Build mockups to verify selections made under Sample submittals, to demonstrate aesthetic effects, and to set quality standards for materials and products and for fabrication and installation.

1. Build mockups of completed installation where products are exposed to view and are located in areas with aesthetic requirements that warrant special attention, including the following spaces:

a. TBD by District.

2. Build mockups of completed installation for areas indicated

on Drawings.
3. Approval of mockups does not constitute approval of deviations from Contract Documents contained in mockups unless Architect specifically approves such deviations in writing.

1.10 PRECONSTRUCTION TESTING

A. Preconstruction Testing Service: Engage a qualified testing agency to perform preconstruction testing on field mockups.
1. Include test assemblies representative of proposed materials and construction.
2. Build mockup at testing agency facility using personnel, materials, and methods of construction that will be used at Project site.
3. Notify Architect seven days in advance of dates and times of tests.

B. Preconstruction Testing: Performed by a qualified testing agency on manufacturer's standard assemblies.

1.11 WARRANTY

A. Manufacturer's Warranty: Manufacturer and Installer agree to repair or replace products that fail in materials or workmanship within specified warranty period.

1. Failures shall be adjusted, repaired, or replaced at no additional cost or reduction in service to Owner.
2. Include updates or upgrades to software and firmware if necessary to resolve deficiencies.

a. Install updates only after receiving Owner's written authorization.

3. Warranty service shall occur during normal business hours and commence within 24 hours of Owner's warranty service request.
4. Warranty Period: Two year(s) from date of Substantial Completion.

a. For Gateway: Two-year parts and labor warranty for each.

PART 2 PRODUCTS

2.1 MANUFACTURERS

A. Servi-Tech (verify with District prior to bidding).

2.2 DDC SYSTEM DESCRIPTION

A. Microprocessor-based monitoring and control including analog/digital conversion and program logic. A control loop or subsystem in which digital and analog information is received and processed by a microprocessor, and digital control signals are

generated based on control algorithms and transmitted to field devices to achieve a set of predefined conditions.

1. DDC system shall consist of a high-speed, peer-to-peer network of distributed DDC controllers, other network devices, operator interfaces, and software.

B. Electrical Components, Devices, and Accessories: Listed and labeled as defined in CEC, by a qualified testing agency, and marked for intended location and application.

C. Provide network drops for EMS/HVAC system as required.

PART 3 EXECUTION

3.1 EXAMINATION

A. Examine substrates and conditions for compliance with requirements for installation tolerances and other conditions affecting performance of the Work.

1. Verify compatibility with and suitability of substrates.

B. Examine roughing-in for products to verify actual locations of connections before installation.

1. Examine roughing-in for instruments installed in piping to verify actual locations of connections before installation.
2. Examine roughing-in for instruments installed in duct systems to verify actual locations of connections before installation.

C. Examine walls, floors, roofs, and ceilings for suitable conditions where product will be installed.

D. Prepare written report, endorsed by Installer, listing conditions detrimental to performance of the Work.

E. Proceed with installation only after unsatisfactory conditions have been corrected.

3.2 DDC SYSTEM INTERFACE WITH OTHER SYSTEMS AND EQUIPMENT

A. Communication Interface to Equipment with Integral Controls:

1. DDC system shall have communication interface with equipment having integral controls and having a communication interface for remote monitoring or control.
2. Equipment to Be Connected:
   a. Roof-top units specified in Section 23 70 00 “HVAC Systems.”
   b. Split Systems specified in Section 23 70 00 “HVAC Systems.”

B. Communication Interface to Other Building Systems:

1. DDC system shall have a communication interface with systems having a communication interface.
2. Systems to Be Connected:
   a. Lighting controls specified in Division 26.

3.3 DDC SYSTEM INTERFACE WITH EXISTING SYSTEMS

A. Interface with Existing Systems:

1. DDC systems shall interface existing systems to achieve integration.
2. Monitoring and Control of DDC System by Existing Control System:

   a. DDC system performance requirements shall be satisfied when monitoring and controlling DDC system by existing control system.
   b. Operator of existing system shall be able to upload, download, monitor, trend, control and program every input and output point in DDC system from existing control system using existing control system software and operator workstations.
   c. Remote monitoring and control from existing control system shall not require operators of existing control system to learn new software.
   d. Interface of DDC system into existing control system shall be transparent to operators of existing control system and allow operators to program, monitor, and control DDC system from any operator workstation connected to existing control system.

3. Integration of Existing Control System into DDC System:

   a. Existing control system performance requirements shall be satisfied when monitoring and controlling existing control system through DDC system.

   b. Operator shall be able to upload, download, monitor, alarm, report, trend, control and program every input and output point in existing system from DDC system using operator workstations and software provided. The combined systems shall share one database.
   c. Interface of existing control system 110 points into DDC system shall be transparent to operators. All operational capabilities shall be identical regardless of whether 110 already exists or I/O is being installed.

B. Integration with Existing Enterprise System:

1. DDC system shall interface with an existing enterprise system to adhere to Owner standards already in-place and to achieve

integration.

2. Owner's control system integrator will provide the following services:

    a. Enterprise system expansion and development of graphics, logs, reports, trends and other operational capabilities of enterprise system for 1/O being added to DDC control system for use by enterprise system operators.
    b. Limited assistance during commissioning to extent of DDC system integration with existing enterprise system.
    a. Prepare on-site demonstration mockup of integration of DDC system to be installed with existing system before installing DDC system.

3. Engage Owner's control system integrator to provide the following services:

    a. Enterprise system expansion and development of graphics, logs, reports, trends and other operational capabilities of enterprise system for I/O being added to DDC control system for use by enterprise system operators.
    b. Limited assistance during commissioning to extent of DDC system integration with existing enterprise system.
    c. Prepare on-site demonstration mockup of integration of DDC system to be installed with existing system before installing DDC system.

4. Control System Integrator Contact Information:

    a. Company: Johnson Controls.

5. Attend meetings with control system integrator to integrate DDC system.

3.4 CONTROL DEVICES FOR INSTALLATION BY INSTALLERS

A. Deliver selected control devices, specified in indicated HVAC instrumentation and control device Sections, to identified equipment and systems manufacturers for factory installation and to identified installers for field installation.

B. Deliver the following to duct fabricator and Installer for installation in ductwork. Include installation instructions to Installer and supervise installation for compliance with requirements.

    1. DDC control dampers.
    2. Airflow sensors and switches.
    3. Pressure sensors.

C. Deliver the following to plumbing and HVAC piping installers for installation in piping. Include installation instructions to Installer and supervise installation for compliance with requirements.

1. DDC control valves.
2. Pipe-mounted flow meters, which are specified in Section 23 09 23.14 “Flow Instruments.”
3. Pipe-mounted sensors, switches, transmitters, flow meters. Liquid temperature sensors, switches, and transmitters.

3.5 CONTROL DEVICES FOR EQUIPMENT MANUFACTURER FACTORY INSTALLATION

A. Deliver the following to air-handling unit manufacturer for factory installation. Include installation instructions to air-handling unit manufacturer **and supervise installation for compliance with requirements.**

1. Controller.
2. Unit-mounted DDC control dampers and actuators.
3. Unit-mounted airflow sensors, switches and transmitters.
4. Unit-mounted gas sensors and transmitters.
5. Unit-mounted leak-detection switches.
6. Unit-mounted speed sensors, switches and transmitters.
7. Unit-mounted pressure sensors, switches and transmitters.
8. Unit-mounted temperature sensors, switches and transmitters. Air-temperature sensors, switches, and transmitters.
9. Relays.

B. Deliver the following to terminal unit manufacturer for factory installation. Include installation instructions to terminal unit manufacturer.

1. Controller.
2. Electric damper actuator.
3. Unit-mounted flow and pressure sensors, transmitters and transducers.
4. Unit-mounted temperature sensors.
5. Relays.

C. Deliver the following to fan-coil unit manufacturer for factory installation. Include installation instructions to fan-coil unit manufacturer.

1. Controller.
2. Unit-mounted temperature sensors.
3. Flow and pressure switches.
4. Leak-detection switches.
5. Relays.

3.6 GENERAL INSTALLATION REQUIREMENTS

A. Install products to satisfy more stringent of all requirements indicated.

B. Install products level, plumb, parallel, and perpendicular with building construction.

C. Support products, tubing, piping wiring and raceways. Brace products to prevent lateral movement and sway or a break in attachment.

D. If codes and referenced standards are more stringent than requirements indicated, comply with requirements in codes and referenced standards.

E. Fabricate openings and install sleeves in ceilings, floors, roof, and walls required by installation of products. Before proceeding with drilling, punching, and cutting, check for concealed work to avoid damage. Patch, flash, grout, seal, and refinish openings to match adjacent condition.

F. Seal penetrations made in acoustically rated assemblies.

G. Welding Requirements:

1. Restrict welding and burning to supports and bracing.
2. No equipment shall be cut or welded without approval. Welding or cutting will not be approved if there is risk of damage to adjacent Work.
3. Welding, where approved, shall be by inert-gas electric arc process and shall be performed by qualified welders according to applicable welding codes.
4. If requested on-site, show satisfactory evidence of welder certificates indicating ability to perform welding work intended.

H. Fastening Hardware:

1. Stillson wrenches, pliers, and other tools that damage surfaces of rods, nuts, and other parts are prohibited for work of assembling and tightening fasteners,
2. Tighten bolts and nuts firmly and uniformly. Do not overstress threads by excessive force or by oversized wrenches.
3. Lubricate threads of bolts, nuts and screws with graphite and oil before assembly.

I. If product locations are not indicated, install products in locations that are accessible and that will permit service and maintenance from floor, equipment platforms, or catwalks without removal of permanently installed furniture and equipment.

J. Corrosive Environments:

1. Avoid or limit use of materials in corrosive airstreams and environments, including, but not limited to, the following:

   a. Laboratory exhaust-air streams.
   b. Process exhaust-air streams.

2. When conduit is in contact with a corrosive airstream and environment, use Type 316 stainless-steel conduit and

fittings or conduit and fittings that are coated with a corrosive resistant coating that is suitable for environment. Comply with requirements for installation of raceways and boxes specified in Division 26.

3. Where instruments are located in a corrosive airstream and are not corrosive resistant from manufacturer, field install products in NEMA 250, Type 4X enclosure constructed of Type 3 16L stainless steel.

3.7 POT INSTALLATION

A. Install one portable operator terminal(s).

B. Turn over POTs to Owner at Substantial Completion.

C. Install software on each POT and verify that software functions properly.

3.8 GATEWAY INSTALLATION

A. Install gateways if required for DDC system communication interface requirements indicated.

1. Install gateway(s) required to suit indicated requirements.

B. Test gateway to verify that communication interface functions properly.

3.9 ROUTER INSTALLATION

A. Install routers if required for DDC system communication interface requirements indicated.

1. Install router(s) required to suit indicated requirements.

B. Test router to verify that communication interface functions properly.

3.10 CONTROLLER INSTALLATION

A. Install controllers in enclosures to comply with indicated requirements.

B. Connect controllers to field power supply **and to UPS units where indicated.**

C. Install controller with latest version of applicable software and configure to execute requirements indicated.

D. Test and adjust controllers to verify operation of connected I/O

to achieve performance indicated requirements while executing sequences of operation.

E. Installation of Network Controllers:

1. Quantity and location of network controllers shall be determined by DDC system manufacturer to satisfy requirements indicated.
2. Install controllers in a protected location that is easily accessible by operators.
3. Top of controller shall be within 72 inches of finished floor.

F. Installation of Programmable Application Controllers:

1. Quantity and location of programmable application controllers shall be determined by DDC system manufacturer to satisfy requirements indicated.
2. Install controllers in a protected location that is easily accessible by operators.
3. Top of controller shall be within 72 inches of finished floor.

G. Application-Specific Controllers:

1. Quantity and location of application-specific controllers shall be determined by DDC system manufacturer to satisfy requirements indicated.
2. For controllers not mounted directly on equipment being controlled, install controllers in a protected location that is easily accessible by operators.

3.11 1NSTALLAION OF WIRELESS ROUTERS FOR OPERATOR INTERFACE

A. Install wireless routers to achieve optimum performance and best possible coverage.

B. Mount wireless routers in a protected location that is within 60 inches of floor and easily accessible by operators.

C. Connect wireless routers to field power supply and to UPS units if network controllers are powered through UPS units.

0. Install wireless router with latest version of applicable software and configure wireless router with WPA2 security and password protection. Create access password with not less than 12 characters consisting of letters and numbers and at least one special character. Document password in operations and maintenance manuals for reference by operators.

E. Test and adjust wireless routers for proper operation with portable workstation and other wireless devices intended for use by operators.

3.12 ENCLOSURES INSTALLATION

A. Install the following items in enclosures, to comply with indicated requirements:

1. Gateways.
2. Routers.
3. Controllers.
4. Electrical power devices.
5. UPS units.
6. Relays.
7. Accessories.
8. Instruments.
9. Actuators

B. Attach wall-mounted enclosures to wall using the following types of steel struts:

1. For NEMA 250, **Type 1** Enclosures: Use **galvanized-steel** strut and hardware.
2. For NEMA 250, **Type 4** Enclosures and Enclosures Located Outdoors: Use stainless-steel strut and hardware.
3. Install plastic caps on exposed cut edges of strut.

C. Align **top or bottom** of adjacent enclosures of **like size**.

D. Install floor-mounted enclosures located in mechanical equipment rooms on concrete housekeeping pads. Attach enclosure legs using **galvanized**-steel anchors.

E. Install continuous and fully accessible wireways to connect conduit, wire, and cable to multiple adjacent enclosures. Wireway used for application shall have protection equal to NEMA 250 rating of connected enclosures.

3.13 ELECTRIC POWER CONNECTIONS

A. Connect electrical power to DDC system products requiring electrical power connections.

B. Design of electrical power to products not indicated with electric power is delegated to DDC system provider and installing trade. Work shall comply with CEC and other requirements indicated.

C. Comply with requirements in Division 26 for electrical power raceways and boxes.

3.14 IDENTIFICATION

A. Identify system components, wiring, cabling, and terminals. Comply with requirements in Division 26 for identification products and installation.

B. Install engraved phenolic nameplate with unique identification on face for each of the following:

1. Operator workstation.
2. Server.
3. Printer.
4. Gateway.
5. Router.
6. Protocol analyzer.
7. DDC controller.
8. Enclosure.
9. Electrical power device.
10. UPS unit.
11. Accessory.

C. Install engraved phenolic nameplate with unique instrument identification on face of each instrument connected to a DDC controller.

D. Install engraved phenolic nameplate with identification on face of each control damper and valve actuator connected to a DDC controller.

E. Where product is installed above accessible tile ceiling, also install matching engraved phenolic nameplate with identification on face of ceiling grid located directly below.

F. Where product is installed above an inaccessible ceiling, also install engraved phenolic nameplate with identification on face of access door directly below.

G. Warning Labels:

1. Shall be permanently attached to equipment that can be automatically started by DDC control system.
2. Shall be located in highly visible location near power service entry points.

3.15 NETWORK INSTALLATION

A. Install fiber-optic cable when connecting between the following network devices and when located in different buildings on campus, or when distance between devices exceeds *295* ft:
1. Network controllers.

B. Install copper cable when connecting between the following network devices:
1. Network controllers.

C. Install network cable in continuous raceway, or conduit.

1. Where indicated on Drawings, cable trays may be used for

copper cable in lieu of conduit.

3.16 NETWORK NAMING AND NUMBERING

A. Coordinate with Owner and provide unique naming and addressing for networks and devices.

B. ASHRAE 135 Networks:

1. MAC Address:
   a. Every network device shall have an assigned and documented MAC address unique to its network.
   b. Ethernet Networks: Document MAC address assigned at its creation.
   a. ARCNET or MS/TP networks: Assign from 00 to 64.

2. Network Numbering:
   a. Assign unique numbers to each new network.
   b. Provide ability for changing network number through device switches or operator interface.
   c. DDC system, with all possible connected LANs, can contain up to 65,534 unique networks.

3. Device Object Identifier Property Number:
   a. Assign unique device object identifier property numbers or device instances for each device network.
   b. Provide for future modification of device instance number by device switches or operator interface.
   a. LAN shall support up to 4,194,302 unique devices.

4. Device Object Name Property Text:
   a. Device object name property field shall support 32 minimum printable characters.
   b. Assign unique device “Object Name” property names with plain-English descriptive names for each device.
      1) Example 1: Device object name for device controlling boiler plant at Building 1000 would be “HW System B 1000.”
      2) Example 2: Device object name for a VAV terminal unit controller could be “VAV unit 102”.

5. Object Name Property Text for Other Than Device Objects:

   a. Object name property field shall support 32 minimum printable characters.

   b. Assign object name properties with plain-English names descriptive of application.
      1) Example 1: “Zone 1 Temperature.”

2) Example 2 “Fan Start and Stop.”

6. Object Identifier Property Number for Other Than Device Objects:
   a. Assign object identifier property numbers according to Control Drawings indicated.
   b. If not indicated, object identifier property numbers may be assigned at Installer’s discretion but must be approved by Owner in advance, be documented and be unique for like object types within device.

3.17 CONTROL WIRE, CABLE AND RACEWAYS INSTALLATION

A. Comply with NECA 1.

B. Comply with TIA 568-C. 1.

C. Wiring Method: Install cables in raceways and cable trays except in accessible ceiling spaces and in gypsum board partitions where unenclosed wiring method may be used. Conceal raceway and cables except in unfinished spaces.

1. Install plenum cable in environmental air spaces, including plenum ceilings.
2. Comply with requirements for raceways and boxes specified in Division 26.

D. Wiring Method: Conceal conductors and cables in accessible ceilings, walls, and floors where possible.

E. Field Wiring within Enclosures: Bundle, lace, and train conductors to terminal points with no excess and without exceeding manufacturer’s limitations on bending radii. Install lacing bars and distribution spools.

F. Conduit Installation:

1. Install conduit expansion joints where conduit runs exceed 200 *feet* and conduit crosses building expansion joints.
2. Coordinate conduit routing with other trades to avoid conflicts with ducts, pipes and equipment and service clearance.
3. Maintain at least 3-inch separation where conduits run axially above or below ducts and pipes.
4. Limit above-grade conduit runs to 100 feet without pull or junction box.
5. Do not install raceways or electrical items on any "explosion-relief" walls, or rotating equipment.
6. Do not fasten conduits onto the bottom side of a metal deck roof.
7. Flexible conduit is permitted only where flexibility and

vibration control is required.

8. Limit flexible conduit to 3 feet long.
9. Conduit shall be continuous from outlet to outlet, from outlet to enclosures, pull and junction boxes, and shall be secured to boxes in such manner that each system shall be electrically continuous throughout.
10. Direct bury conduits underground or install in concrete-encased duct bank where indicated.
    a. Use rigid, nonmetallic, Schedule 80 PVC.
    b. Provide a burial depth according to CEC, but not less than 24 inches.
11. Secure threaded conduit entering an instrument enclosure, cabinet, box, and trough, with a locknut on outside and inside, such that conduit system is electrically continuous throughout. Provide a metal bushing on inside with insulated throats. Locknuts shall be the type designed to bite into the metal or, on inside of enclosure, shall have a grounding wedge lug under locknut.
12. Conduit box-type connectors for conduit entering enclosures shall have an insulated throat.
13. Connect conduit entering enclosures in wet locations with box-type connectors or with watertight sealing locknuts or other fittings.
14. Offset conduits where entering surface-mounted equipment.
15. Seal conduit runs used by sealing fittings to prevent the circulation of air for the following:

    a. Conduit extending from interior to exterior of building.
    b. Conduit extending into pressurized duct and equipment.
    c. Conduit extending into pressurized zones that are automatically controlled to maintain different pressure set points.

G. Wire and Cable Installation:

1. Cables serving a common system may be grouped in a common raceway. Install control wiring and cable in separate raceway from power wiring. Do not group conductors from different systems or different voltages.
2. Install cables with protective sheathing that is waterproof and capable of withstanding continuous temperatures of 90 deg C with no measurable effect on physical and electrical properties of cable.
    a. Provide shielding to prevent interference and distortion from adjacent cables and equipment.

3. Install lacing bars to restrain cables, to prevent straining connections, and to prevent bending cables to smaller radii than minimums recommended by manufacturer.
4. Bundle, lace, and train conductors to terminal points without exceeding manufacturer’s limitations on bending radii, but not less than radii specified in BICSI ITSIMM, “Cabling Termination Practices” Chapter. Install lacing bars and distribution spools.

5. UTP Cable Installation:
    a. Comply with TIA 568-C.2.
    b. Do not untwist UTP cables more than 1/2 inch from the point of termination, to maintain cable geometry.
6. Installation of Cable Routed Exposed under Raised Floors:
    a. Install plenum-rated cable only.
    b. Install cabling after the flooring system has been installed in raised floor areas.
    c. Coil cable 6 feet long not less than 12 inches in diameter below each feed point.
7. Identify each wire on each end and at each terminal with a number-coded identification tag. Each wire shall have a unique tag.
8. Provide strain relief.
9. Terminate wiring in a junction box.
    a. Clamp cable over jacket injunction box.
    b. Individual conductors in the stripped section of the cable shall be slack between the clamping point and terminal block.
10. Terminate field wiring and cable not directly connected to instruments and control devices having integral wiring terminals using terminal blocks.
11. Install signal transmission components according to IEEE C2, REA Form 511 a, CEC, and as indicated.
12. Keep runs short. Allow extra length for connecting to terminal boards. Do not bend flexible coaxial cables in a radius less than 10 times the cable OD. Use sleeves or grommets to protect cables from vibration at points where they pass around sharp corners and through penetrations,
13. Ground wire shall be copper and grounding methods shall comply with IEEE C2. Demonstrate ground resistance.
14. Wire and cable shall be continuous from terminal to terminal without splices.
15. Use insulated spade lugs for wire and cable connection to screw terminals.
16. Use shielded cable to transmitters.
17. Use shielded cable to temperature sensors.
18. Perform continuity and meager testing on wire and cable after installation.
19. Do not install bruised, kinked, scored, deformed, or abraded wire and cable. Remove and discard wire and cable if damaged during installation, and replace it with new cable.
20. Cold-Weather Installation: Bring cable to room temperature before dereeling. Heat lamps shall not be used for heating.
21. Pulling Cable: Comply with BICSI ITSIM, Ch. 4, “Pulling Cable.” Monitor cable pull tensions.
22. Protection from Electro-Magnetic Interference (EMI): Provide installation free of (EMI). As a minimum, comply with the following requirements:

    a. Comply with BICSI TDMM and TIA 569-C for separating unshielded cable from potential EMI sources, including electrical power lines and equipment.
    b. Separation between open cables or cables in nonmetallic raceways and unshielded power conductors and electrical

equipment shall be as follows:

1) Electrical Equipment Rating Less Than 2 kVA: A minimum of 5 inches.
2) Electrical Equipment Rating between 2 and *5* kVA: A minimum of 12 inches.
3) Electrical Equipment Rating More Than 5 kVA: A minimum of 24 inches.

c. Separation between cables in grounded metallic raceways and unshielded power lines or electrical equipment shall be as follows:

1) Electrical Equipment Rating Less Than 2 kVA: A minimum of 2-1/2 inches.
2) Electrical Equipment Rating between 2 and 5 kVA: A minimum of 6 inches.
3) Electrical Equipment Rating More Than S kVA: A minimum of 12 inches.

d. Separation between cables in grounded metallic raceways and power lines and electrical equipment located in grounded metallic conduits or enclosures shall be as follows:

1) Electrical Equipment Rating Less Than 2 kVA: No requirement.
2) Electrical Equipment Rating between 2 and *5* kVA: A minimum of 3 inches.
3) Electrical Equipment Rating More Than *5* kVA: A minimum of 6 inches.

e. Separation between Cables and Electrical Motors and Transformers, *5* kVA or 5 HP and Larger: A minimum of 48 inches.
f. Separation between Cables and Fluorescent Fixtures: A minimum of 5 inches.

3.18 FIBER-OPTIC CABLE SYSTEM INSTALLATION

A. Comply with TIA 568-C.3, except where requirements indicated are more stringent.

B. Raceway Installation:

1. Install continuous raceway for routing fiber-optic cables.

2. Install raceways continuously between pull boxes and junction boxes. Raceways shall enter and be secured to enclosures.
3. Make bends in raceway using large-radius preformed ells. Field bending shall be according to CEC minimum radii requirements. Use only equipment specifically designed for material and size involved.
4. Install no more than the equivalent of two 90-degree bends

in any pathway run. Support within 12 inches of changes in direction. Use long radius elbows for all fiber-optic cables.

5. Entire raceway shall be complete and raceway interior cleaned before installation of fiber-optic cables.
6. Securely fasten raceway to building structure using clamps and clips designed for purpose.

7. Install nylon or polyethylene pulling line in raceways. Clearly label as "pulling line," indicating source and destination.

C. Fiber-Optic Cable Installation:
1. Route cables as efficiently as possible, minimizing amount of cable required.
2. Continuously lubricate cables during pulling-in process.
3. Do not exceed maximum pulling tensions provided by cable manufacturer. Monitor cable pulling tension with a mechanical tension meter.
4. Arrange cables passing through pull boxes to obtain maximum clearance among cables within box.
5. As cables emerge from intermediate point pull boxes, coil cable in a figure eight pattern with loops not less than 24 inches in diameter.
6. Terminate fiber-optic cables in a fiber-optic splice organizer cabinet, unless connected equipment can accept fiber-optic cables directly. Terminate cables with connectors.
7. Install and connect appropriate opto-electronic equipment and fiber jumper cables between opto-electronic equipment and fiber-optic cable system to DDC system fiber-optic cable system. Verify interface compatibility.

D. Cable and Raceway Identification:
1. Label cables at both ends. Labels shall be typed, not handwritten.
2. Mark raceways at each pull box indicating the type and number of cables within.

3.19 FIELD QUALITY CONTROL

A. Testing Agency: Engage a qualified testing agency to perform tests and inspections.

B. Manufacturer's Field Service: **Engage** a factory-authorized service representative to test and inspect components, assemblies, and installations, including connections.

C. Perform the following tests and inspections **with the assistance of a factory-authorized service representative:**
1. Perform each visual and mechanical inspection and electrical test stated in NETA Acceptance Testing Specification. Certify compliance with test parameters.
2. Test and adjust controls and safeties. Replace damaged and

malfunctioning controls and equipment.

3. Testing of Pneumatic and Air-Signal Tubing:

    a. Test for leaks and obstructions.
    b. Disconnect each pipe and tubing line before a test is performed, and blowout dust, dirt, trash, condensate and other foreign materials with compressed air. Use commercially pure compressed air or nitrogen as distributed in gas cylinders. Air from an oil-free compressor with an air dryer is an acceptable alternative for the test.
    c. After foreign matter is expelled and line is free from obstructions, plug far end of tubing run.
    d. Connect a pressure source to near end of run with a needle valve between air supply and tubing run.
    e. Connect a pressure gage accurate to within 0.5 percent of test between the shutoff needle valve and tubing run under test.
    f. For system pressures above 30 psig, apply a pressure of 1.5 times operating pressure. Record pressure in tubing run every 10 minutes for one hour. Allowable drop in pressure in one-hour period shall not exceed 1 psig.
    g. For system pressures 30 psig and below, apply a pressure of 2,0 times operating pressure to piping and tubing run. Record pressure in tubing run every 5 minutes for one hour. Allowable drop in pressure in one-hour period shall not exceed 0.5 psig.

D. Testing:

1. Perform preinstallation, in-progress, and final tests, supplemented by additional tests, as necessary.
2. Preinstallation Cable Verification: Verify integrity and serviceability for new cable lengths before installation. This assurance may be provided by using vendor verification documents, testing, or other methods. As a minimum, furnish evidence of verification for cable attenuation and bandwidth parameters.
3. In-Progress Testing: Perform standard tests for correct pair identification and termination during installation to ensure proper installation and cable placement. Perform tests in addition to those specified if there is any reason to question condition of material furnished and installed. Testing accomplished is to be documented by agency conducting tests. Submit test results for Project record.
4. Final Testing: Perform final test of installed system to demonstrate acceptability as installed. Testing shall be performed according to a test plan supplied by DDC system manufacturer. Defective Work or material shall be corrected and retested. As a minimum, final testing for cable system, including spare cable, shall verify conformance of attenuation, length, and bandwidth parameters with performance indicated.
5. Test Equipment: Use a fiber-optic time domain reflectometer for testing of length and optical connectivity.

6. Test Results: Record test results and submit copy of test results for Project record.

3.20 DDC SYSTEM I/O CHECKOUT PROCEDURES

A. Check installed products before continuity tests, leak tests and calibration.

B. Check instruments for proper location and accessibility.

C. Check instruments for proper installation on direction of flow, elevation, orientation, insertion depth, or other applicable considerations that will impact performance.

D. Check instrument tubing for proper isolation, fittings, slope, dirt legs, drains, material and support.

E. For pneumatic products, verify that air supply for each product is properly installed.

F. Control Damper Checkout:

1. For pneumatic dampers, verify that pressure gages are provided in each air line to damper actuator and positioner.
2. Verify that control dampers are installed correctly for flow direction.
3. Verify that proper blade alignment, either parallel or opposed, has been provided.
4. Verify that damper frame attachment is properly secured and sealed.
5. Verify that damper actuator and linkage attachment is secure.
6. Verify that actuator wiring is complete, enclosed and connected to correct power source.
7. Verify that damper blade travel is unobstructed.

G. Control Valve Checkout:

1. For pneumatic valves, verify that pressure gages are provided in each air line to valve actuator and positioner.
2. Verify that control valves are installed correctly for flow direction.
3. Verify that valve body attachment is properly secured and sealed.
4. Verify that valve actuator and linkage attachment is secure.
5. Verify that actuator wiring is complete, enclosed and connected to correct power source.
6. Verify that valve ball, disc or plug travel is unobstructed.
7. After piping systems have been tested and put into service, but before insulating and balancing, inspect each valve for leaks. Adjust or replace packing to stop leaks. Replace the valve if leaks persist.

H. Instrument Checkout:

1. Verify that instrument is correctly installed for location, orientation, direction and operating clearances.
2. Verify that attachment is properly secured and sealed.
3. Verify that conduit connections are properly secured and sealed.
4. Verify that wiring is properly labeled with unique identification, correct type and size and is securely attached to proper terminals.
5. Inspect instrument tag against approved submittal.
6. For instruments with tubing connections, verify that tubing attachment is secure and isolation valves have been provided.
7. For flow instruments, verify that recommended upstream and downstream distances have been maintained.
8. For temperature instruments:

    a. Verify sensing element type and proper material.
    b. Verify length and insertion.

3.21 DDC SYSTEM I/O ADJUSTMENT, CALIBRATION AND TESTING:

A. Calibrate each instrument installed that is not factory calibrated and provided with calibration documentation.

B. Provide a written description of proposed field procedures and equipment for calibrating each type of instrument. Submit procedures before calibration and adjustment.

C. For each analog instrument, make a three-point test of calibration for both linearity and accuracy.

D. Equipment and procedures used for calibration shall comply with instrument manufacturer’s written instructions.

E. Provide diagnostic and test equipment for calibration and adjustment.

F. Field instruments and equipment used to test and calibrate installed instruments shall have accuracy at least twice the instrument accuracy being calibrated. An installed instrument with an accuracy of 1 percent shall be checked by an instrument with an accuracy of 0.5 percent.

G. Calibrate each instrument according to instrument instruction manual supplied by manufacturer.

H. If after calibration indicated performance cannot be achieved, replace out-of-tolerance instruments.

I. Comply with field testing requirements and procedures indicated by ASHRAE’s Guideline 11, “Field Testing of HVAC Control Components,” in the absence of specific requirements, and to supplement requirements indicated.

J. Analog Signals:

1. Check analog voltage signals using a precision voltage meter at zero, 50, and 100 percent.
2. Check analog current signals using a precision current meter at zero, 50, and 100 percent.
3. Check resistance signals for temperature sensors at zero, 50, and 100 percent of operating span using a precision-resistant source.

K. Digital Signals:

1. Check digital signals using a jumper wire.
2. Check digital signals using an ohmmeter to test for contact making or breaking.

L. Control Dampers:

1. Stroke and adjust control dampers following manufacturer's recommended procedure, from 100 percent open to 100 percent closed and back to 100 percent open.
2. Stroke control dampers with pilot positioners. Adjust damper and positioner following manufacturer's recommended procedure, so damper is 100 percent closed, 50 percent closed and 100 percent open at proper air pressure.
3. Check and document open and close cycle times for applications with a cycle time less than 30 seconds.
4. For control dampers equipped with positive position indication, check feedback signal at multiple positions to confirm proper position indication.

M. Control Valves:

1. Stroke and adjust control valves following manufacturer's recommended procedure, from 100 percent open to 100 percent closed and back to 100 percent open.
2. Stroke control valves with pilot positioners. Adjust valve and positioner following manufacturer's recommended procedure, so valve is 100 percent closed, 50 percent closed and 100 percent open at proper air pressures.
3. Check and document open and close cycle times for applications with a cycle time less than 30 seconds.
4. For control valves equipped with positive position indication, check feedback signal at multiple positions to confirm proper position indication.

N. Meters: Check sensors at zero, 50, and 100 percent of Project design values.

0. Sensors: Check sensors at zero, 50, and 100 percent of Project design values.

P. Switches: Calibrate switches to make or break contact at set points indicated.

Q. Transmitters:

1. Check and calibrate transmitters at zero, *50,* and 100 percent of Project design values.
2. Calibrate resistance temperature transmitters at zero, 50, and 100 percent of span using a precision-resistant source.

3.22 DDC SYSTEM CONTROLLER CHECKOUT

A. Verify power supply.

1. Verify voltage, phase and hertz.
2. Verify that protection from power surges is installed and functioning.
3. Verify that ground fault protection is installed.
4. If applicable, verify if connected to UPS unit.
5. If applicable, verify if connected to a backup power source.
6. If applicable, verify that power conditioning units, transient voltage suppression and high-frequency noise filter units are installed.

B. Verify that wire and cabling is properly secured to terminals and labeled with unique identification.

C. Verify that spare 110 capacity is provided.

3.23 DDC CONTROLLER 110 CONTROL LOOP TESTS

A. Testing:

1. Test every I/O point connected to DDC controller to verify that safety and operating control set points are as indicated and as required to operate controlled system safely and at optimum performance.
2. Test every I/O point throughout its full operating range.
3. Test every control loop to verify operation is stable and accurate.
4. Adjust control loop proportional, integral and derivative settings to achieve optimum performance while complying with performance requirements indicated, Document testing of each control loop’s precision and stability via trend logs.
5. Test and adjust every control loop for proper operation according to sequence of operation.
6. Test software and hardware interlocks for proper operation. Correct deficiencies.
7. Operate each analog point at the following:

    a. Upper quarter of range.
    b. Lower quarter of range.
    c. At midpoint of range.

8. Exercise each binary point.
9. For every I/O point in DDC system, read and record each value at operator workstation, at DDC controller and at field instrument simultaneously. Value displayed at operator

workstation, at DDC controller and at field instrument shall match.

10. Prepare and submit a report documenting results for each I/O point in DDC system and include in each I/O point a description of corrective measures and adjustments made to achieve desire results.

3.24 DDC SYSTEM VALIDATION TESTS

A. Perform validation tests before requesting final review of system. Before beginning testing, first submit Pretest Checklist and Test Plan.

B. After approval of Test Plan, execute all tests and procedures indicated in plan.

C. After testing is complete, submit completed test checklist.

D. Pretest Checklist: Submit the following list with items checked off once verified:

1. Detailed explanation for any items that are not completed or verified.
2. Required mechanical installation work is successfully completed and HVAC equipment is working correctly.
3. HVAC equipment motors operate below full-load amperage ratings.
4. Required DDC system components, wiring, and accessories are installed.
5. Installed DDC system architecture matches approved Drawings.
6. Control electric power circuits operate at proper voltage and are free from faults.
7. Required surge protection is installed.
8. DDC system network communications function properly, including uploading and downloading programming changes.
9. Using BACnet protocol analyzer, verify that communications are error free.
10. Each controller’s programming is backed up.
11. Equipment, products, tubing, wiring cable and conduits are properly labeled.
12. All I/O points are programmed into controllers.
13. Testing, adjusting and balancing work affecting controls is complete.
14. Dampers and actuators zero and span adjustments are set properly.
15. Each control damper and actuator goes to failed position on loss of power.
16. Valves and actuators zero and span adjustments are set properly.
17. Each control valve and actuator goes to failed position on loss of power.
18. Meter, sensor and transmitter readings are accurate and calibrated.
19. Control loops are tuned for smooth and stable operation.

20. View trend data where applicable.
21. Each controller works properly in standalone mode.
22. Safety controls and devices function properly.
23. Interfaces with fire-alarm system function properly.
24. Electrical interlocks function properly.
25. Operator workstations and other interfaces are delivered, all system and database software is installed, and graphic are created.
26. Record Drawings are completed.

E. Test Plan:

1. Prepare and submit a validation test plan including test procedures for performance validation tests.
2. Test plan shall address all specified functions of DDC system and sequences of operation.
3. Explain detailed actions and expected results to demonstrate compliance with requirements indicated.
4. Explain method for simulating necessary conditions of operation used to demonstrate performance.
5. Include a test checklist to be used to check and initial that each test has been successfully completed.
6. Submit test plan documentation **[10] [20] "Insert number** business days before start of tests.

F. Validation Test:

1. Verify operating performance of each I/O point in DDC system.

    a. Verify analog I/O points at operating value.
    b. Make adjustments to out-of-tolerance 1/O points.

        1) Identify I/O points for future reference.
        2) Simulate abnormal conditions to demonstrate proper function of safety devices.
        3) Replace instruments and controllers that cannot maintain performance indicated after adjustments.

2. Simulate conditions to demonstrate proper sequence of control.

3. Readjust settings to design values and observe ability of DDC system to establish desired conditions.
4. After 24 Hours following Initial Validation Test:

    a. Re-check I/O points that required corrections during initial test.
    b. Identify I/O points that still require additional correction and make corrections necessary to achieve desired results.

5. After 24 Hours of Second Validation Test:

    a. Re-check I/O points that required corrections during

second test.
b. Continue validation testing until 1/O point is normal on two consecutive tests,

6. Completely check out, calibrate, and test all connected hardware and software to ensure that DDC system performs according to requirements indicated.
7. After validation testing is complete, prepare and submit a report indicating all I/O points that required correction and how many validation re-tests it took to pass. Identify adjustments made for each test and indicate instruments that were replaced.

G. DDC System Response Time Test:

1. Simulate HLC.

a. Heavy load shall be an occurrence of 50 percent of total connected binary COV, one-half of which represent an "alarm" condition, and 50 percent of total connected analog COV, one-half of which represent an "alarm" condition, that are initiated simultaneously on a one-time basis.

2. Initiate 10 successive occurrences of HLC and measure response time to typical alarms and status changes.
3. Measure with a timer having at least 0.1-second resolution and 0.01 percent accuracy.
4. Purpose of test is to demonstrate DDC system, as follows:

a. Reaction to COV and alarm conditions during HLC.

b. Ability to update DDC system database during HLC.

5. Passing test is contingent on the following:

a. Alarm reporting at printer beginning no more than two seconds after the initiation (time zero) of HLC.
b. All alarms, both binary and analog, are reported and printed; none are lost.
c. Compliance with response times specified.

6. Prepare and submit a report documenting HLC tested and results of test including time stamp and print out of all alarms.

H. DDC System Network Bandwidth Test:

1. Test network bandwidth usage on all DDC system networks to demonstrate bandwidth usage under DDC system normal operating conditions and under simulated HLC.

2. To pass, none of DDC system networks shall use more than 70 percent of available bandwidth under normal and HLC operation.

3.25 DDC SYSTEM WIRELESS NETWORK VERIFICATION

A. DDC system Installer shall design wireless DDC system networks to comply with performance requirements indicated.

B. Installer shall verify wireless network performance through field testing and shall document results in a field test report.

C. Testing and verification of all wireless devices shall include, but not be limited to, the following:

1. Speed.
2. Online status.
3. Signal strength.

3.26 FINAL REVIEW

A. Submit written request to Architect when DDC system is ready for final review. Written request shall state the following:

1. DDC system has been thoroughly inspected for compliance with contract documents and found to be in full compliance.
2. DDC system has been calibrated, adjusted and tested and found to comply with requirements of operational stability, accuracy, speed and other performance requirements indicated.
3. DDC system monitoring and control of HVAC systems results in operation according to sequences of operation indicated.
4. DDC system is complete and ready for final review.

B. Review by **Architect** shall be made after receipt of written request. A field report shall be issued to document observations and deficiencies.

C. Take prompt action to remedy deficiencies indicated in field report and submit a second written request when all deficiencies have been corrected. Repeat process until no deficiencies are reported.

D. Should more than two reviews be required, DDC system manufacturer and Installer shall compensate entity performing review for total costs, labor and expenses, associated with third and subsequent reviews. Estimated cost of each review shall be submitted and approved by DDC system manufacturer and Installer before making the review.

E. Prepare and submit closeout submittals when no deficiencies are reported.

F. A part of DDC system final review shall include a demonstration to parties participating in final review.

1. Provide staff familiar with DDC system installed to demonstrate operation of DDC system during final review.

2. Provide testing equipment to demonstrate accuracy and other performance requirements of DDC system that is requested by reviewers during final review.
3. Demonstration shall include, but not be limited to, the following:

    a. Accuracy and calibration of 10 I/O points randomly selected by reviewers. If review finds that some I/O points are not properly calibrated and not satisfying performance requirements indicated, additional I/O points may be selected by reviewers until total I/O points being reviewed that satisfy requirements equals quantity indicated.
    b. HVAC equipment and system hardwired and software safeties and life-safety functions are operating according to sequence of operation. Up to 10 I/O points shall be randomly selected by reviewers. Additional I/O points may be selected by reviewers to discover problems with operation.
    c. Correct sequence of operation after electrical power interruption and resumption after electrical power is restored for randomly selected HVAC systems.
    d. Operation of randomly selected dampers and valves in normal-on, normal-off and failed positions.
    e. Reporting of alarm conditions for randomly selected alarms, including different classes of alarms, to ensure that alarms are properly received by operators and operator workstations.
    f. Trends, summaries, logs and reports set-up for Project.
    g. For up to three HVAC systems randomly selected by reviewers, use graph trends to show that sequence of operation is executed in correct manner and that HI/AC systems operate properly through complete sequence of operation including different modes of operations indicated. Show that control loops are stable and operating at set points and respond to changes in set point of 20 percent or more.
    h. Software's ability to communicate with controllers, operator workstations, uploading and downloading of control programs.
    i. Software's ability to edit control programs off-line.
    j. Data entry to show Project-specific customizing capability including parameter changes.
    k. Step through penetration tree, display all graphics, demonstrate dynamic update, and direct access to graphics.
    1. Execution of digital and analog commands in graphic mode.
    m. Spreadsheet and curve plot software and its integration with database.
    n. Online user guide and help functions.
    o. Multitasking by showing different operations occurring simultaneously on four quadrants of split screen.
    p. System speed of response compared to requirements indicated.

q. For Each Network Controller:

1) Memory: Programmed data, parameters, trend and alarm history collected during normal operation is not lost during power failure.
2) Operator Interface: Ability to connect directly to each type of digital controller with a portable operator workstation and PDA. Show that maintenance personnel interface tools perform as indicated in manufacturer's technical literature.

a) Display of network device status.
b) Display of BACnet Object Information.
c) Silencing devices transmitting erroneous data.
d) Time synchronization.
e) Remote device re-initialization.
f) Backup and restore network device programming and master database(s).
g) Configuration management of routers.

3.27 EXTENDED OPERATION TEST

A. Extended operation test is intended to simulate normal operation of DDC system by Owner.

B. Operate DDC system for an operating period of **14** consecutive calendar days following Substantial Completion. Coordinate exact start date of testing with **Owner**.

C. Provide an operator familiar with DDC system installed to man an operator workstation **while** on-site during eight hours of each normal business day occurring during operating period.

D. During operating period, DDC system shall demonstrate correct operation and accuracy of monitored and controlled points as well as operation capabilities of sequences, logs, trends, reports, specialized control algorithms, diagnostics, and other software indicated.

1. Correct defects of hardware and software when it occurs.

E. Definition of Failures and Downtime during Operating Period:

1. Failed I/O point constituting downtime is an I/O point failing to perform its intended function consistently and a point physically failed due to hardware and software.
2. Downtime is when any I/O point in DDC system is unable to fulfill its' required function.
3. Downtime shall be calculated as elapsed time between a detected point failure as confirmed by an operator and time point is restored to service.
4. Maximum time interval allowed between DDC system detection of failure occurrence and operator confirmation shall be 0.5 hours.

5. Downtime shall be logged in hours to nearest 0.1 hour.
6. Power outages shall not count as downtime, but shall suspend test hours unless systems are provided with UPS and served through a backup power source.
7. Hardware or software failures caused by power outages shall count as downtime.

F. During operating period, log downtime and operational problems are encountered.

1. Identify source of problem.
2. Provide written description of corrective action taken.
3. Record duration of downtime.
4. Maintain log showing the following:

    a. Time of occurrence.
    b. Description of each occurrence and pertinent written comments for reviewer to understand scope and extent of occurrence.
    c. Downtime for each failed I/O point.
    d. Running total of downtime and total time of I/O point after each problem has been restored.

5. Log shall be available to Owner for review at any time.

G. For DDC system to pass extended operation test, total downtime shall not exceed 1 percent of total point-hours during operating period.

1. Failure to comply with minimum requirements of passing at end of operating period indicated shall require that operating period be extended one consecutive day at a time until DDC system passes requirement.

H. Evaluation of DDC system passing test shall be based on the following calculation:

1. Downtime shall be counted on a point-hour basis where total number of DDC system point-hours is equal to total number of I/O points in DDC system multiplied by total number of hours during operating period.
2. One point-hour of downtime is one I/O point down for one hour. Three points down for five hours is a total of 15 point-hours of downtime. Four points down for one-half hour is 2 point-hours of downtime.
3. Example Calculation: Maximum allowable downtime for 30-day test when DDC system
has 1000 total I/O points (combined analog and binary) and has passing score of
1 percent downtime is computed by 30 days x 24 h/day x 1000 points x 1 percent equals
7200 point-hours of maximum allowable downtime.

I. Prepare test and inspection reports.

3.28 ADJUSTING

A. Occupancy Adjustments: When requested within **12** months from date of Substantial Completion, provide on-site assistance in adjusting system to suit actual occupied conditions. Provide up to two visits to Project during other-than-normal occupancy hours for this purpose.

3.29 MAINTENANCE SERVICE

A. Maintenance Service: Beginning at Substantial Completion, maintenance service shall include **three** months' full maintenance by DDC system manufacturer's authorized service representative. Include monthly preventive maintenance, repair or replacement of worn or defective components, cleaning, calibration and adjusting as required for proper operation. Parts and supplies shall be manufacturer's authorized replacement parts and supplies.

3.30 SOFTWARE SERVICE AGREEMENT

A. Technical Support: Beginning at Substantial Completion, service agreement shall include software support for **one year(s).**

B. Upgrade Service: At Substantial Completion, update software to latest version, Install and program software upgrades that become available within one year(s) from date of Substantial Completion. Upgrading software shall include operating system and new or revised licenses for using software.

1. Upgrade Notice: At least **30** days to allow Owner to schedule and access system and to upgrade computer equipment if necessary.

3.31 DEMONSTRATION

A. Engage a factory-authorized service representative with complete knowledge of Project-specific system installed to train Owner's maintenance personnel to adjust, operate, and maintain DDC system.

B. Extent of Training:

1. Base extent of training on scope and complexity of DDC system indicated and training requirements indicated. Provide extent of training required to satisfy requirements indicated even if more than minimum training requirements

are indicated.
2. Inform Owner of anticipated training requirements if more than minimum training requirements are indicated.
3. Minimum Training Requirements:

    a. Provide not less than five days of training total.
    b. Stagger training over multiple training classes to accommodate Owner's requirements. All training shall occur before end of warranty period.
    c. Total days of training shall be broken into not more than two separate training classes.
    d. Each training class shall be not less than one consecutive day(s).

C. Training Schedule:

1. Schedule training with Owner 20 business days before expected Substantial Completion.
2. Schedule training to provide Owner with at least **10** business days of notice in advance of training.
3. Training shall occur within normal business hours at a mutually agreed on time. Unless otherwise agreed to, training shall occur Monday through Friday, except on U.S. Federal holidays, with two morning sessions and two afternoon sessions. Each morning session and afternoon session shall be split in half with **15** minute break between sessions. Morning and afternoon sessions shall be separated by **30** minute lunch period. Training, including breaks and excluding lunch period, shall not exceed e**igh**t hours per day.
4. Provide staggered training schedule as requested by Owner.

D. Training Attendee List and Sign-in Sheet:

1. Request from Owner in advance of training a proposed attendee list with name, phone number and e-mail address.
2. Provide a preprinted sign-in sheet for each training session with proposed attendees listed and no fewer than six blank spaces to add additional attendees.
3. Preprinted sign-in sheet shall include training session number, date and time, instructor name, phone number and e-mail address, and brief description of content to be covered during session. List attendees with columns for name, phone number, e-mail address and a column for attendee signature or initials.
4. Circulate sign-in sheet at beginning of each session and solicit attendees to sign or initial in applicable location.
5. At end of each training day, send Owner an e-mail with an attachment of scanned copy (PDF) of circulated sign-in sheet for each session.

E. Training Attendee Headcount:

1. Plan in advance of training for two attendees.
2. Make allowance for Owner to add up to one attendee(s) at

time of training.
3. Headcount may vary depending on training content covered in session. Attendee access may be restricted to some training content for purposes of maintaining system security.

F. Training Attendee Prior Knowledge: For guidance in planning required training and instruction, assume attendees have the following:

1. **High school and technical school** education and degree.
2. **Intermediate** user knowledge of computers and office applications.
3. **Intermediate** knowledge of HVAC systems.
4. **Intermediate** knowledge of DDC systems.
5. **Intermediate** knowledge of DDC system and products installed.

G. Attendee Training Manuals:

1. Provide each attendee with a color hard copy of all training materials and visual presentations.
2. Hard-copy materials shall be organized in a three-ring binder with table of contents and individual divider tabs marked for each logical grouping of subject matter. Organize material to provide space for attendees to take handwritten notes within training manuals.
3. In addition to hard-copy materials included in training manual, provide each binder with a sleeve or pocket that includes a DVD or flash drive with PDF copy of all hard-copy materials.

H. Instructor Requirements:

1. One or multiple qualified instructors, as required, to provide training.
2. Instructors shall have not less than five years of providing instructional training on not less than five past projects with similar DDC system scope and complexity to DDC system installed.

Organization of Training Sessions:

1. Organize training sessions into logical groupings of technical content and to reflect different levels of operators having access to system. Plan training sessions to accommodate the following three levels of operators:

   a. Daily operators.
   b. Advanced operators.
   c. System managers and administrators.

2. Plan and organize training sessions to group training content to protect DDC system security. Some attendees may be restricted to some training sessions that cover restricted content for purposes of maintaining DDC system security.

J. Training Outline:

1. Submit training outline for Owner review at least 10 business day before scheduling training,
2. Outline shall include a detailed agenda for each training day that is broken down into each of four training sessions that day, training objectives for each training session and synopses for each lesson planned.

K. On-Site Training:

1. Owner will provide conditioned classroom or workspace with ample desks or tables, chairs, power and data connectivity for instructor and each attendee.
2. Instructor shall provide training materials, projector and other audiovisual equipment used in training.
3. Provide as much of training located on-site as deemed feasible and practical by Owner.
4. On-site training shall include regular walk-through tours, as required, to observe each unique product type installed with hands-on review of operation, calibration and service requirements.
5. Operator workstation provided with DDC system shall be used in training. If operator workstation is not indicated, provide a temporary workstation to convey training content.

L. Off-Site Training:

1. Provide conditioned training rooms and workspace with ample tables desks or tables, chairs, power and data connectivity for each attendee.
2. Provide capability to remotely access to Project DDC system for use in training.
3. Provide a workstation for use by each attendee.

M. Training Content for Daily Operators:

1. Basic operation of system.
2. Understanding DDC system architecture and configuration.
3. Understanding each unique product type installed including performance and service requirements for each.
4. Understanding operation of each system and equipment controlled by DDC system including sequences of operation, each unique control algorithm and each unique optimization routine.
5. Operating operator workstations, printers and other peripherals.
6. Logging on and off system.
7. Accessing graphics, reports and alarms.
8. Adjusting and changing set points and time schedules.
9. Recognizing DDC system malfunctions.
10. Understanding content of operation and maintenance manuals including control drawings.
11. Understanding physical location and placement of DDC

controllers and 1/O hardware.

12. Accessing data from DDC controllers.
13. Operating portable operator workstations.
14, Review of DDC testing results to establish basic understanding of DDC system operating performance and HVAC system limitations as of Substantial Completion.
15. Running each specified report and log.
16. Displaying and demonstrating each data entry to show Project-specific customizing capability. Demonstrating parameter changes.
17. Stepping through graphics penetration tree, displaying all graphics, demonstrating dynamic updating, and direct access to graphics.
18. Executing digital and analog commands in graphic mode.
19. Demonstrating control loop precision and stability via trend logs of I/O for not less than 10 percent of I/O installed,
20. Demonstrating DDC system performance through trend logs and command tracing.
21. Demonstrating scan, update, and alarm responsiveness.
22. Demonstrating spreadsheet and curve plot software, and its integration with database.
23. Demonstrating on-line user guide, and help function and mail facility.
24. Demonstrating multitasking by showing dynamic curve plot, and graphic construction operating simultaneously via split screen.
25. Demonstrating the following for HVAC systems and equipment controlled by DDC system:

    a. Operation of HVAC equipment in normal-off, -on and failed conditions while observing individual equipment, dampers and valves for correct position under each condition.
    b. For HVAC equipment with factory-installed software, show that integration into DDC system is able to communicate with DDC controllers or gateways, as applicable.
    c. Using graphed trends, show that sequence of operation is executed in correct manner, and HVAC systems operate properly through complete sequence of operation including seasonal change, occupied and unoccupied modes, warm-up and cool-down cycles and other modes of operation indicated.
    d. Hardware interlocks and safeties function properly and DDC system performs correct sequence of operation after electrical power interruption and resumption after power is restored.
    e. Reporting of alarm conditions for each alarm, and confirm that alarms are received at assigned locations, including operator workstations.
    f. Each control loop responds to set point adjustment and stabilizes within time period indicated.
    g. Sharing of previously graphed trends of all control loops to demonstrate that each control loop is stable

and set points are being maintained.

N. Training Content for Advanced Operators:

1. Making and changing workstation graphics.
2. Creating, deleting and modifying alarms including annunciation and routing.
3. Creating, deleting and modifying point trend logs including graphing and printing on an ad-hoc basis and operator-defined time intervals.
4. Creating, deleting and modifying reports.
5. Creating, deleting and modifying points.
6. Creating, deleting and modifying programming including ability to edit control programs off-line.
7. Creating, deleting and modifying system graphics and other types of displays.
8. Adding DDC controllers and other network communication devices such as gateways and routers.
9. Adding operator workstations.
10. Performing DDC system checkout and diagnostic procedures.
11. Performing DDC controllers operation and maintenance procedures.
12. Performing operator workstation operation and maintenance procedures.
13. Configuring DDC system hardware including controllers, workstations, communication devices and 110 points.
14. Maintaining, calibrating, troubleshooting, diagnosing and repairing hardware.
15. Adjusting, calibrating and replacing DDC system components.

O. Training Content for System Managers and Administrators:

1. DDC system software maintenance and backups.
2. Uploading, downloading and off-line archiving of all DDC system software and databases.
3. Interface with Project-specific, third-party operator software.
4. Understanding password and security procedures.
5. Adding new operators and making modifications to existing operators.
6. Operator password assignments and modification.
7. Operator authority assignment and modification.
8. Workstation data segregation and modification.

P. Video of Training Sessions:

1. Provide a digital video and audio recording of each training session. Create a separate recording file for each session.
2. Stamp each recording file with training session number, session name and date.

3. Provide Owner with two copies of digital files on DVDs or flash drives for later reference and for use in future training.
4. Owner retains right to make additional copies for intended

training purposes without having to pay royalties.

END OF SECTION

SECTION 23 31 00
AIR DISTRIBUTION

PART 1 GENERAL

1.01 SECTION INCLUDES

A. Section 23 05 00, General Mechanical Requirements, and Section 23 05 10, General Mechanical Materials, insofar as they are applicable to this Section, and unless otherwise hereinafter specified.

B. Materials, equipment and labor as herein specified which shall take precedence over those elsewhere specified.

C. Duct work, duct work attachments, dampers, fire dampers, air distribution equipment and installation.

PART 2 PRODUCTS

2.01 RECTANGULAR DUCT WORK

A. Definition: This paragraph applies to ductwork for the HVAC systems and exhaust systems.

B. Duct work construction shall be in accordance with the Code, using galvanized sheet metal of the following gauges:

Maximum Duct Size in Inches	Minimum U.S. Gauge
Up to 12	26
13 to 30	24
31 to 54	22

C. Duct gauges shown in the schedule are governed by the long side of the duct.

D. Flat duct surfaces shall be crimped diagonally for sizes above 18 in.; at Contractor's option, beading at 12 in. on centers may be used in lieu of crimping (cross breaking).

E. Longitudinal duct seams in all duct sizes may be Pittsburgh lock or button punch snap lock with buttons spaced at 2 in. on centers.

F. Transverse duct joints and intermediate bracing shall be constructed of galvanized sheet steel and galvanized structural angles as follows:

Max. Duct Side in In.	Transverse Duct Joint	Max. O.C.	Intermediate Bracing @ All Sides
Up to 18	S and Drive Slip or 1" Pocket Lock	10 ft.	None
19 to 42	1" Pocket Lock	10 ft.	1" x 1" x 1/8" angles, 5 ft. from joint
43 to 60	1-1/2" Pocket Lock	10 ft.	1" x 1" x 1/8" angles, 5 ft. from joint

G. Transverse duct joints shown in the schedule may be used on the short sides of the duct to the limit of the indicated joint.

H. Pocket locks (government locks) and standing seams shall be hammered airtight. Pocket locks shall be riveted at each corner. Standing seams shall be riveted at 10 in. on centers with not less than three rivets per side.

I. Duct transitions shall be made with a slope of not more than 1 ft. in 5 ft. wherever possible, but in any event not more than 1 ft. in 3 ft.

J. Duct turns shall be made with a throat radius of not less than the duct width; if the job conditions do not permit such turns, sharp right angle duct turns with turning vanes shall be used.

K. Turning vanes shall be Duro-Dyne Duro Vane Rail assemblies with 24 gauge galvanized 90 deg. double vanes held firmly by two 24 gauge 2-1/4" wide galvanized crimped rails. Vanes shall have 2 in. inner radius and 1 in. outer radius. Vanes shall be spaced at 1-1/2" in. on centers measured on rails. Top and bottom rails shall be fastened to the duct with sheet metal screws spaced at 12 in. on centers with a minimum of two screws per rail.

L. Access doors shall be made of galvanized sheet steel 2 gauges heavier than plenum or duct of the same size. Doors shall have 1" thick Celotex core with galvanized sheet steel on both sides and shall be provided with neoprene gasket. Doors shall be provided with hinges and catches as follows:

1. Door Heights 12 in. and Smaller: Two Duro-Dyne HH-2 hinges spaced at quarter points; one Duro-Dyne SL-1 sash latch in center of door.

2. Door Heights 13 in. and Larger: Two Duro-Dyne HH-3 hinges spaced at quarter points; one Duro-Dyne SP-20 latch with handles on both sides located in center of door.

M. Transverse duct joints shall be sealed with Foster 32-14 U.L. Listed fire retardant high velocity duct sealer applied to the joints before they are made; an exterior surface application of the duct sealer shall be made to the joints after they are closed. In addition, transverse duct joints exposed to the weather shall be covered with 6" wide 6 oz. canvas completely saturated with Foster 30-36 U.L. Listed fire retardant coating. At Contractor's option, duct sealer in concealed transverse duct joints may be omitted and joints may be covered with 4" wide 6 oz. canvas completely saturated with Foster 30-36 U.L. Listed fire retardant coating.

N. Flexible duct connections shall be Duro-Dyne Durolon or Excelon State Fire Marshal listed non-combustible fabric with weatherproof, airtight, chemical resisting and fire retardant coating. Flexible duct connections attached to the duct work with lock seam shall be not more than 6" long.

O. Horizontal duct work shall be suspended or supported as follows:

1. Duct Sizes Up to 30 Inches: 1" wide 18gauge galvanized straps shall be bent to extend 1 in. on the underside of the duct on both sides. Each strap will be fastened to the bottom and side of the duct with three sheet metal screws.

2. Duct Sizes Over 30 Inches: 1" wide 1/8" thick galvanized straps shall extend full height of standing seams or angles on both sides of the duct with each strap fastened to the angle or standing seams with two 1/4" bolts and nuts with washers on both ends and spaced 1 in. from top and bottom of the duct. At Contractor's option, ducts may be suspended with 1" wide 1/8" thick U-straps fastened to the bottom and side of the duct with four sheet metal screws.

3. Duct Suspension Spacing: 8 ft. on centers.

P. Vertical duct work shall be supported every 8 ft. as follows:

1. Duct Sizes Up to 24 Inches: 1" wide 1/8" thick horizontal straps fastened to the duct with four sheet metal screws.

2. Duct Sizes Over 24 Inches

Maximum Duct Size in Inches	Galvanized Horiz. Angle
25 to 36	1" x 1" x 1/8"
37 to 48	1-1/4" x 1-1/4" x 1/8"
49 to 54	1-1/2" x 1-1/2" x 1/8"

3. Straps and angles shall be installed under and adjacent to the joints.

Q. Duct work construction not defined by the Code and not herein specified shall be in accordance with the 1995 edition of the S.M.A.C.N.A. Duct Construction Standards.

2.02 ROUND DUCT WORK

A. Ducts shall be Omni spirally wound lock seam units with beaded slip joint couplings made in accordance with the Code, using galvanized sheet metal of the following gauges:

Maximum Dia. in Inches	Minimum U.S. Gauge
Up to 13	26
14 to 22	24
23 to 27	22
28 to 37	20

B. Fittings shall be Omni spot welded and sealed units made in accordance with the Code using galvanized sheet metal of the following gauges:

Maximum Duct Dia. in Inches	Minimum U.S. Gauge
Up to 13	24
14 to 22	22
23 to 37	20

C. 90 deg. duct turns shall be Omni four gore units.

D. Branch duct take-off fittings shall be Omni 45 deg. laterals.

E. Access doors shall be made of galvanized sheet steel 2 gauges heavier than plenum or duct of the same size. Doors shall have 1" thick Celotex core with galvanized sheet steel on both sides and shall be provided with neoprene gasket. Doors shall be provided with hinges and catches as follows:

1. Door Heights 12 in. and Smaller: Two Duro-Dyne HH-2 hinges spaced at quarter points; One Duro-Dyne SL-1 sash latch in center of door.

2. Door Heights 13 in. and Larger: Two Duro-Dyne HH-3 hinges spaced at quarter points; one Duro-Dyne SP-20 latch with handles on both sides located in center of door.

F. Transverse duct joints shall be sealed with Foster 32-14 U.L. Listed fire retardant high velocity duct sealer applied to the joints before they are made; an exterior surface application of the duct sealer shall be made to the joints after they are closed. At Contractor's option, duct sealer in concealed transverse duct joints may be omitted, and joints may be covered with 4" wide 6 oz. canvas completely saturated with Foster 30-36 U.L. Listed fire retardant coating.

G. Flexible duct connections shall be Duro-Dyne Durolon or Excelon State Fire Marshal listed non-combustible fabric with weatherproof, airtight, chemical resisting and fire retardant coating. Flexible duct connections attached to the duct work with lock seam shall be not more than 6 in. long.

H. Horizontal duct work shall be suspended or supported two 1" wide x 20 ga. straps spaced at 10 ft. on centers.

I. Duct work construction not defined by the Code and not herein specified shall be in accordance with the latest edition of the S.M.A.C.N.A. Duct Construction Standards and CMC requirements.

2.03 DUCT WORK ATTACHMENTS

A. Wood Construction

1. Strap Hanger Fasteners in Shear: Duct suspension fastened with one 8d nail for ducts with periphery up to 10 ft.; duct suspension fastened with 1/4" machine bolt with nut and washers at both ends for ducts with periphery over 10 ft.

2. Strap Hanger Fasteners in Tension: Duct suspension fastened with one 1/4" x 1-1/2" lag screw for ducts with periphery up to 10 ft.; duct suspension fastened to 2" long 1" x 1" x 1/4" angle with 1/4" machine bolt with nut and washers at both ends for ducts with periphery over 10 ft.; angle fastened with 1/4" x 2" lag bolt with washer.

3. Rod Hangers: 2" long 1-1/2" x 1-1/2" x 1/4" steel angle, fastened with one 3/8" bolt and nut with washers at both ends.

B. Steel Construction

1. Strap Hangers: Duct suspension fastened to Caddy Fig. 7 flange clamp with 1/4" machine bolt and nut with washers at both ends; flange clamp hammered to flange of the structural member.

2. Rod Hangers: Superstrut M-775-L beam C-clamp with lock nut and M-775-C retaining clip.

2.04 RECTANGULAR DAMPERS

A. Rectangular Volume Dampers: Greenheck Model VCD-1100 galvanized steel assembly with 16 ga. frame, 16 ga. interlocked opposed blades, 1/2" pins with nylon bushings, 1/2" extended shaft and Duro-Dyne K-5 locking quadrant.

B. Vertical Pressure Relief Dampers: Greenheck Model WD-330 assembly with 18 ga. galvanized steel frame, interlocked aluminum parallel blades with felt lined edges, 3/16" pins and nylon bushings.

C. Horizontal Pressure Relief Dampers: Greenheck Model WD-100 assembly with 18 ga. galvanized steel frame, spring assisted interlocked aluminum parallel blades with felt lined edges, 3/16" pins and nylon bushings.

D. Equivalent: Air Balance.

2.05 ROUND VOLUME DAMPERS

A. Omni galvanized steel assembly with 22 ga. blade, 3/8" shaft, Duro-Dyne SB-338 close end bearing and Duro-Dyne KR-3 locking quadrant.

2.06 FIRE/SMOKE DAMPERS

A. Design and construction in accordance with NFPA 90A, 92A, 92B & 101; UL 555 and UL 555S. Interlocking blade type. Installed in accordance with damper manufacturer's installation instructions.

B. Pottorff Model FSD-142 State Fire Marshall listed (CSFM listing 3225 0368:110 & 3230-368:111), 1-1/2 hrs. rated, multi-blade galvanized steel assembly with usable link, leakage Class II construction and Belimo electric damper actuator. Provide stainless steel model where indicated on plans.

C. Construction:

1. Frames: Galvanized steel with 16 gauge galvanized steel sleeve with provisions for attaching to ducts and securing to building structure.

2. Blades: Opposed blade, 14 gauge air foil and silicone rubber seals to withstand 350°F.

3. Provide damper label per UL 555. Fire rating of 1-1/2 hour. UL 555S classification and labeling as a leakage Class II, 350°F temperature.

4. Provide 165°F fusible link.

D. Control: Damper to close when smoke is detected by a smoke detector furnished under Division 26. One microswitch shall close when the damper is fully closed, and the other switch shall close when the damper is fully open to indicate damper position. Damper reset from the fire alarm system in smoke mode. Fusible link melts and spring action close damper with fire mode.

E. Fire smoke dampers shall be installed in accordance with the manufacturer's recommendations, complying with the State Fire Marshall requirements.

F Fire/smoke dampers shall be provided with adequate access required for inspection and fusible link replacement, but in any case not less than 12" x 12" size.

G. Equivalent: Ruskin, Greenheck.

2.07 AIR DISTRIBUTION EQUIPMENT

A. Anemostat furnished in baked off-white finish.

B. Ceiling Diffusers: Model PRS units with removable adjustable curved blades and clip-in perforated face; where indicated on the Drawings, diffusers shall be Model PRSO units with key operated opposed blade volume dampers.

C. T-Bar Ceiling Diffusers: Model PRE units with removable adjustable curved blades and 24" x 24" /24" x 48"/ 30" x 30" clip-in perforated face filler panel; where indicated on the Drawings, diffusers shall be Model PREO units with key operated opposed blade volume dampers.

D. Round Ceiling Diffusers: Model C-27 units with adjustable vertical pattern and Model LD volume dampers.

E. Supply Wall Grilles: Model S2V units with double deflection adjustable vertical front bar core.

F. Supply Wall Registers: Model S2VO units with double deflection adjustable vertical front bar core and key operated opposed blade volume dampers.

G. Return Ceiling Grilles: Model 3P unit with clip-in perforated face.

H. Return T-Bar Ceiling Grilles: Model 3PRD units with 24" x 24" /24" x 48"/ 30" x 30" clip-in perforated face filler panel

I. Return Ceiling Registers: Model 3PO unit with removable perforated face and key operated opposed blade volume dampers.

J. Return Wall Grilles: Model S3V units with vertical bar core.

K. Return Wall Registers: Model S3VO units with vertical bar core

and key operated opposed blade volume dampers.

L. Transfer Ceiling Grilles: Model 3P unit with clip-in perforated face.

M. Transfer T-Bar Ceiling Grilles: Model 3PRD unit with 24" x 24" /24" x 48"/ 30" x 30" clip-in perforated face filler panel.

N. Transfer Wall Grilles: Model S3V units with vertical bar core.

O. Exhaust Ceiling Grilles: Model 3P units with clip-in perforated face.

P. Exhaust T-Bar Ceiling Grilles: Model 3PRD units with 24" x 24" /24" x 48"/ 30" x 30" clip-in perforated face filler panel.

Q. Exhaust Ceiling Registers: Model 3PO units with clip-in perforated face and key operated opposed blade volume dampers.

R. Exhaust Wall Grilles: Model S3V units with vertical bar core.

S. Exhaust Wall Registers: Model S3VO units with vertical bar core and key operated opposed blade volume dampers.

T. Relief Ceiling Grilles: Model 3P unit with clip-in perforated face.

U. Relief T-Bar Ceiling Grilles: Model 3PRD units with 24" x 24" /24" x 48"/ 30" x 30" clip-in perforated face filler panel.

V. Relief Wall Grilles: Model S3V units with vertical bar core.

W. Relief Outside Grilles: Model S3V unit.

X. Sizes of filler panels are nominal sizes; actual sizes shall be determined in close coordination with the Suspended Ceiling Contractor.

Y. Extractors: Model DT2M unit with 2" blade spacing and manual operator.

Z. Equivalent: Titus, Tuttle & Bailey and Krueger.

2.08 DUCT INSULATION

A. Thermal Insulation: Supply, return and transfer ducts and plenums shall be provided with Manville "Microlite" U.L. listed 2" thick, 3/4 lb./cft. density (R = 6.0) thermal insulation with FHC 25/50 composite rating and aluminum foil facing. Insulation shall be firmly wrapped around the duct with a 2 in. lap on all joints and shall be secured with 16 gauge soft annealed galvanized wire spaced at 12 in. on centers.

B. Rectangular Duct Liner: Where indicated on the Drawings, duct liner shall be Manville "Lina-Coustic" U.L. listed 1" thick (R = 4.0) sound insulation with FHC 25/50 composite rating. Insulation shall be installed with the faced side up, and shall be secured with Foster 85-20 "Spark-Fas" U.L. listed fire retardant adhesive.

C. Round Duct Liner: Where indicated on the Drawings, duct liner shall be Casco "Circliner" U.L. listed 1" thick (R = 4.4) sound insulation with FHC 25/50 composite rating. Insulation shall be installed in accordance with the manufacturer's recommendations.

D. Equivalent: Fiberglas, Certain-Teed.

E. Duct work exposed in air conditioned space shall not be insulated unless otherwise indicated on drawings.

F. Duct insulation shall be installed after the duct work has been pressure tested.

G. The insulation values shown are a minimum. If the requirements of Title 24 exceed these values, the amount of and/or type of insulation must be increased to meet the Title 24 requirements.

PART 3 EXECUTION

3.01 DUCT WORK INSTALLATION

A. Unless otherwise indicated, duct hangers and supports shall not pierce the duct work.

B. Duct work shall clear beams, columns and other structural members.

C. Powder actuated tools shall not be used.

D. Steel construction fireproofing damaged by the duct suspension attachments shall be repaired to the satisfaction of the Architect.

E. For soundproof walls, the ducts shall be provided with sheet metal sleeves 1 in. larger in both directions than the duct size; the annular space shall be packed with 3/4 lb./cft density fiberglass insulation.

F. Air distribution equipment shall be supported independently from the suspended ceiling system.

G. For soundproof walls, the ducts shall be provided with sheet metal sleeves 1 in. larger in both directions than the duct size; the annular space shall be packed with 3/4 lb./cft density fiberglass insulation.

H. The use of fiberglass for round and/or rectangular ductwork is prohibited.

I. Volume dampers shall be provided and installed in every branch duct serving every diffuser and/or register, and as shown on plans.

J. Turning vanes shall be installed in all right angle sharp turns in rectangular ducts.

K. Where sound insulation or internal lining is indicated, specified duct dimensions are net dimensions, i.e., dimensions after sound insulation has been installed.

L. Ductwork shall be sealed after installation until final connection to diffuser/register is made.

M. Ductwork installed in outdoor locations shall be provided with a baked epoxy coating.

3.02 SEISMIC BRACING

A. Duct work and diffusers/registers shall be seismically braced in accordance with the Guidelines for Seismic Restraints of Mechanical Systems and Plumbing Piping Systems published by S.M.A.C.N.A. seismic hazard level A, and P.P.I.C., and approved by the Division of the State Architect, Structural Safety Section (DSA).

B. Prior to Start of Construction, the Contractor shall provide a new copy of the Guidelines to the Inspector for use during the construction.

3.03 DUCTWORK AND ACCESSORIES

A. Provide openings in duct where required to accommodate thermometers and controllers. Provide pilot tube openings where required for testing of systems, complete with metal can with spring device or screw to ensure against air leakage. Where openings are provided in insulated ductwork, install
insulation material inside a metal ring.

B. Locate ducts with sufficient space around equipment to allow normal operating and maintenance activities.

C. Install accessories in accordance with manufacturer's instructions and to meet the provisions of SMACNA "Seismic Restraint Manual: guidelines for Mechanical Systems", Latest Edition.

D. Provide balancing dampers at points on low-pressure supply, return, and exhaust systems where branches are taken from larger ducts as required for air balancing. Use splitter dampers only where indicated.

E. Provide duct access doors for inspection and cleaning before and after filters, coils, fans, automatic dampers, at fire dampers, and elsewhere as indicated. Provide minimum 12 x 12inch size for hand access, 30 x 30 inch size for shoulder

access and as indicated.

F. Provide duct test holes where indicated and required for testing and balancing purposes.

G. Check location of outlets and inlets and make necessary adjustments in position to conform to Architectural features, symmetry, and lighting arrangement.

H. Install diffusers to ductwork with airtight connection.

I. Provide balancing dampers on duct take-off to diffusers and registers, regardless of whether dampers are specified as part of the diffuser, or register assembly.

J. Paint ductwork visible behind air outlets and inlets matte black.to the Inspector for use during the construction.

3.04 SOUND AND VIBRATION ISOLATION

A. All vibrating equipment shall be sound isolated from the structure.

B. The Contractor shall submit all necessary data for each vibration isolator, including static deflection and weight loading, for equipment in operation.

C. All vibrating equipment shall be provided with flexible pipe connections. Submit for approval prior to installation.

3.05 TESTS

A. General: As per Section 23 05 10.

B. Duct Pressure Tests: As per Section 23 05 93.

END OF SECTION

SECTION 23 34 00
EXHAUST SYSTEM

PART 1 GENERAL

1.01 SECTION INCLUDES

A. Section 23 05 00, General Mechanical Requirements, and Section 23 05 10, General Mechanical Materials, insofar as they are applicable to this Section, and unless otherwise herein specified.

B. Material, equipment and labor as herein specified which shall take precedence over those elsewhere specified.

C. Exhaust system consisting of exhaust fans, relief air hoods and other equipment herein specified.

D. Section 23 31 00, Air Distribution.

E. Section 23 05 93, HVAC Air Balancing.

PART 2 PRODUCTS

2.01 ROOF EXHAUST FANS

A. Greenheck G Series all aluminum construction centrifugal fan assembly with spun housing, curb cover, wheel with backwardly inclined blades, rubber mounted motor, direct drive/adjustable V-belt drive, bird screen, back draft dampers and integral disconnect switch. Motors shall have built-in automatic reset overload protection. Motor and fan shaft shall have sealed grease packed bearings. Fans with direct drive shall be provided with integral speed control.

B. Ratings shall be A.M.C.A. certified and units shall be U.L. listed.

C. Units shall be provided with factory furnished pitched roof variable height galvanized steel roof curb with integral cant; curb shall be 8" high at high point of roof.

D. Equivalent: Cook, Penn, Acme.

2.02 UTILITY EXHAUST FANS

A. Greenheck USF Series centrifugal stainless steel fan assembly with housing, housing support, drive frame, wheel with forwardly inclined blades, rubber mounted motor and VFD. See schedule on plans for additional information.

B. Fans shall be provided with back draft dampers, weather-hood and rubber-in-shear vibration isolators with seismic restraints.

C. Ratings shall be A.M.C.A. certified

D. Where indicated on the drawings, fan interior shall be provided with Permatector concrete gray-ral 7023 chemical coating.

E. Equivalent: Cook, Penn, Acme.

2.03 RELIEF/INTAKE AIR HOODS

A. Greenheck GRSR Series all aluminum construction assembly with spun housing, curb cover and bird screen.

B. Units shall be provided with pitched roof variable height galvanized steel roof curb with integral cant; curb shall be 8" high at high point of roof.

C. Equivalent: Cook, Penn, Acme.

2.04 MOTOR STARTERS

A. Furnished and installed under Division 26 Sections.

PART 3 EXECUTION

3.01 INSTALLATION

A. Roof exhaust and utility fans shall be fastened to the roof curb.

B. Roof curbs shall be fastened to the roof structure.

3.02 EQUIPMENT IDENTIFICATION

A. All roof exhaust fans shall be permanently identified in a workmanlike manner.

B. Identification code shall be as indicated on the Drawings.

3.2.2.1One inch high laminated black-on-white plastic nameplates.

3.2.2.2One quarter inch high letters and numbers.

3.03 TESTS

A. General: As per Section 23 05 10.

B. The system shall be placed in operation and shall be regulated and adjusted by the Contractor to the satisfaction of the Architect.

C. The system shall be adjusted to eliminate noise and insure proper functioning of controls.

D. The system shall operate quietly and without objectionable vibration.

E. The air balancing shall be as hereinafter specified in Section 23 05 93.

3.04 OPERATING AND MAINTENANCE INSTRUCTIONS

A. The Contractor shall instruct the Owner's Representative, who will operate the system about the operation and maintenance or the equipment.

B. The Contractor shall deliver to the Owner two (2) copies of Operating and Maintenance Manuals for Air Conditioning Systems furnished and installed under Section 23 70 00.

3.05 GUARANTEE SERVICE CALLS

A. General: As per Section 23 05 00.

B. During the guarantee period, the Contractor shall provide repair service within 24 hours after receiving a request for service from the Owner.

END OF SECTION

SECTION 23 34 39
HIGH-VOLUME, LOW-SPEED PROPELLER FANS

PART 1 GENERAL

1.01 SUMMARY
- A. Section Includes
  - 1. High-Volume, Low-Speed Propeller Fans (H.V.L.S.), ceiling mounted
  - 2. Fan accessories
- B. Products Supplied But Not Installed Under This Section
- C. Products Installed But Not Supplied Under This Section
- D. Related Sections
- E. Allowances
- F. Unit Prices
- G. Measurement Procedures
- H. Payment Procedures
- I. Alternates

1.02 REFERENCES
- A. National Fire Protection Agency (NFPA)
- B. Underwriters Laboratory (UL)
- D. International Organization for Standardization (ISO)
- E. National Electrical Manufacturers Association (NEMA)

1.03 DEFINITIONS

1.04 SYSTEM DESCRIPTIONS
- A. Design Requirements, Performance Requirements
  - 1. The ceiling-mounted, circulation fan is the model scheduled with the capacities indicated. The fan shall be furnished with mounting hardware and variable speed control to provide cooling and destratification.

1.05 SUBMITTALS
- A. General
- B. Product Data
  - 1. Submit product data sheets on the ceiling-mounted fan, specifying electrical and installation requirements, features and benefits, and controller information.
- C. Shop Drawings
  - 1. Submit drawings detailing product dimensions, weight, and attachment methods.
- D. Samples
- E. Quality Assurance/Control Submittals
  - 1. Design Data, Test Reports, Certificates, Manufacturers' Instructions, Manufacturers' Field Reports, Qualification Statements
- F. Closeout Submittals
  - 1. The manufacturer shall furnish a copy of all operating and maintenance instructions for the fan. All data is subject to change without notice.

1.06 QUALITY ASSURANCE
- A. Qualifications
  1. The fan and any accessories shall be supplied by Big Ass Fan Company, which has a minimum of ten (10) years of product experience.
  2. ISO 9001-certified
- B. Regulatory Requirements
- C. Certifications
  1. The fan assembly, as a system, shall be ETL-certified and built pursuant to the guidelines set forth by UL standard 507 and CSA standard 22.2 No. 113.
  2. The fan shall be compliant with NFPA 13—Standard for the Installation of Sprinkler Systems, NFPA 72—National Fire Alarm and Signaling Code, and California Electrical Code (CEC).
  3. Controllers shall comply with California Electrical Code (CEC) and Underwriters Laboratory (UL) standards and shall be labeled where required by code.
- D. Field Samples
- E. Mock-ups
- F. Pre-installation Meetings

1.07 DELIVERY, STORAGE, AND HANDLING
- A. Packing, Shipping, Handling, and Unloading
  1. Deliver product in original, undamaged packaging with identification labels intact.
  2. The fan shall be new, free from defects, and factory tested.
- B. Acceptance at Site
- C. Storage and Protection
  1. The fan and its components must be stored in a safe, dry location until installation.
- D. Waste Management and Disposal

1.08 PROJECT CONDITIONS
1.09 SEQUENCING
1.10 SCHEDULING
1.11 WARRANTY
1.12 SYSTEM STARTUP
1.13 OWNER'S INSTRUCTIONS
1.14 COMMISSIONING
1.15 MAINTENANCE

PART 2 PRODUCTS

2.01 MANUFACTURERS
- A. Deta T Corporation, dba Big Ass Fans, PO Box 11307, Lexington, Kentucky 40575, or equal.
- B. MacroAir, 794 S. Allen Street, San Bernardino, CA 92408

2.02 EXISTING PRODUCTS
2.03 MATERIALS
2.04 MANUFACTURED UNITS
- A. (Big Ass Fans) Powerfoil D
  1. Fan Diameter: 14 feet

B. (MacroAir) Equivalent Model

2.05 EQUIPMENT
2.06 COMPONENTS
2.07 ACCESSORIES
A. Mounting System
1. Provide manufacturer's mounting brackets as detailed on drawings, including 'L'-Brackets, Yokes, Extension Tubes (Sized to position fan at elevations indicated on drawings, Safety Cables, Bolt Hardware, and guy wires.
B. Controller
1. Provide manufacturer's standard wall mount factory-programmed touchpad controller.

2.08 MIXES
2.09 FABRICATION
2.10 FINISHES
2.11 SOURCE QUALITY CONTROL

PART 3 EXECUTION

3.01 INSTALLERS
A. The fan shall be installed by a factory-certified installer.

3.02 EXAMINATION
3.03 PREPARATION
3.04 ERECTION
3.05 INSTALLATION
A. The fan shall be installed in strict accordance with manufacturer's published instructions.

3.06 APPLICATION
3.07 CONSTRUCTION
3.08 REPAIR/RESTORATION
3.09 RE-INSTALLATION
3.10 FIELD QUALITY CONTROL
3.11 ADJUSTING
3.12 CLEANING
3.13 DEMONSTRATION
3.14 PROTECTION
3.15 SCHEDULES

END OF SECTION

SECTION 23 70 00
HVAC SYSTEMS

PART 1 GENERAL

1.01 SECTION INCLUDES

A. Section 23 05 00, General Mechanical Requirements, and Section 23 05 10, General Mechanical Materials, insofar as they are applicable to this Section, and unless otherwise herein specified.

B. Material, equipment and labor as herein specified which shall take precedence over those elsewhere specified.

C. HVAC systems consisting of rooftop ac units and split system heat pump units and other equipment herein specified.

D. Section 23 31 00, Air Distribution.

E. Section 23 05 93, HVAC Air Balancing.

1.02 CONTRACTOR

A. Installing contractor shall have a C-20 license.

PART 2 PRODUCTS

2.01 SPLIT SYSTEM HEAT PUMP UNITS

A. Indoor Sections: Trane/Mitsubishi TPKA Series wall mounted unit with housing in white finish, direct drives centrifugal indoor fan, three speed motor, 410A refrigerant indoor coil and drain pan.

B. Outdoor section: Trane/Mitsubishi TRUZA Series roof mounted unit with housing, 410A refrigerant hermetic compressor, direct driven propeller outdoor fan, 410A refrigerant outdoor coil and defrost timer.

C. Indoor and outdoor sections shall be E.T.L. and C.E.C listed.

D. Refrigeration piping: Factory furnished type L copper liquid line and copper vapor line installed in a common insulation tube. Insulation thickness shall meet Title 24 requirements.

2.02 REFRIGERANT PIPING INSULATION

A. General

1. Refrigerant piping shall be insulated with factory prefabricated fiberglass insulation with factory applied service jacket (Min. R=4.0). Insulation thickness shall be 1-1/2”, or as required by the California Energy Code (CEC).

2 Refrigerant Suction and Hot-Gas Piping: Cellular glass, flexible elastomeric, or mineral-fiber, preformed pipe, Type I. Insulate refrigerant liquid lines where recommended by unit manufacturer.

B. Indoor Piping Insulation Schedule

1. Condensate and Equipment Drain below 60 Deg. F: Cellular glass, flexible elastomeric, or mineral-fiber, preformed pipe.

C. Outdoor, Above Ground Piping Insulation Schedule

1. Refrigerant Suction and Hot-Gas Piping: Cellular glass, flexible elastomeric, or mineral-fiber, preformed pipe insulation, Type I. Insulate refrigerant liquid lines where recommended by unit manufacturer.

D. Indoor, Field Applied Jacket Schedule

1. Piping, concealed: None
2. Piping, exposed: PVC, color-coded by system, Aluminum or Painted aluminum.

E. Outdoor, Field Applied Jacket Schedule

1. Piping, concealed: Aluminum or painted aluminum.
2. Piping, exposed: Aluminum of painted aluminum

2.03 AIR CONDITIONING UNITS (Gas/Electric)

A. Trane high efficiency units YHC & YZC Series natural gas fired roof mounted pull-through single zone packaged air conditioning units, complete with housing, supply fan, heating components, cooling components, controls and factory furnished accessories. Units shall be factory assembled, piped, wired, tested and provided with operating refrigerant charge. Units shall be U.L. and C.E.C. listed.

B. Housing shall be complete with structural frame and prepainted removable panels. Interior of the housing exposed to the air passage shall be provided with moistureproof sound insulation.

C. Supply Fan: centrifugal type with wheels with forwardly curved blades.

1. Adjustable V-belt drive or five speed direct drive for 3 ton and 6 ton units.

2. Adjustable V-belt drive for 7-1/2 ton and larger units.

D. Supply Fan Motor: Rubber mounted unit with built-in automatic reset overload protection.

1. Multi-speed motor for direct driven fans.

2. Single speed motor for belt driven fans.

E. Heating components shall consist of furnace with aluminized steel heat exchanger, induced draft burners, silent gas valve, automatic electric ignition and automatic reset high limit.

F. Cooling Components shall consist of R410 hermetic compressor with

crankcase heater and rubber-in-shear isolators, air cooled condenser, cooling coil, refrigeration piping and controls including refrigerant low pressure switch and refrigerant high pressure switch.

G. Controls Integral to Unit: Circuit breakers, fuses, starters, contactors, relays, switches and other controls required for proper operation.

H. Factory Installed Accessories: Alternate motors and alternate drives where indicated on the Drawings. In addition, all AC units serving gymnasium and multi-purpose areas shall be provided with controls to monitor compressor temperature, blower static pressure and shall have an alarm function to indicate problems.

I. Contractor Installed Accessories: Outside air hood with manual damper, compressor short cycle protector (TIME GUARD), thermostat with auto changeover and subbase, and filter rack; filters shall be as hereinafter specified.

J. Air conditioning units shall be provided within factory furnished modulating economizers with solid-state enthalpy control and factory installed motor actuators; motor actuators shall be suitable to accept an 0-10 volt D.C. control signal, economizers shall be contractor installed.

K. Where indicated on drawings, AC units shall be provided with a Micrometal modulating centrifugal power exhaust to control a neutral pressure in the space. Pressure sensor shall be installed in the space.

L. Steril-Aire UVC EMITTERS shall be of the type and size necessary to provide the following and install only in accordance with the manufacturers recommendations. To continuously kill surface and airborne microorganisms, supply and install significant quantities of UVC EMITTERS downstream of each cooling coil such that a minimum of 1000 uW/cm2 strikes the coil fins at the closest point and through placement, not less than 60% of that value at the farthest point. Equal amounts are to strike the drain pan, either directly or indirectly through reflection.

M. Where indicated on drawing, unit shall be provided with carbon dioxide [CO**2**] sensors and demand control ventilation controls.

N. Roof Curb: Carrier pitched roof variable height unitized curb with duct rails, gaskets, wood nailer and seismic brackets; curb shall be 8" high at high point of roof. Provide isolation curb where indicated on plans.

O. Factory furnished seismic restraints /brackets including properly sized screws shall be installed in accordance with factory furnished instructions; instructions shall include seismic calculations by registered Structural Engineer.

P. Air conditioning units shall be suitable for outdoor installation.

Q. Unit shall be provided with hinged panel option for filter and evaporator fan access.

R. Additional five-year compressor parts and heat exchanger parts

warranty for all air conditioning units shall be provided by the Air Conditioning Unit Manufacturer; this warranty shall commence after the formal acceptance of work by the Owner.

S. Equivalent: Carrier.

2.04 FILTERS

A. Filters: AAF Prepleat M13 Merv 13 U.L. listed throw away type filters; filters (SFM listing 3175-140:006) shall be high efficiency based on ASHRAE Test Standard 52.2. Provide minimum 2" media, weight arrestance 90%, dust spot efficiency 25%, clean filter resistance 0.10" water column at 300 fpm, throw away frame, UL Class 2.

B. Air conditioning Units: 2" thick.

C. Equivalent: Farr, Eco-Air.

PART 3 EXECUTION

3.01 INSTALLATION

A. Air conditioning and Condensing units shall be fastened to the roof curb.

B. Roof curbs shall be fastened to the roof structure.

C. Condenser coils shall be thoroughly cleaned after construction and prior to occupancy for all AC and condensing units.

3.02 EQUIPMENT IDENTIFICATION

A. All units shall be permanently identified in a workmanlike manner.

1. One inch high laminated block on white plastic name plates.

2. One quarter inch high letters and numbers.

B. Identification code shall be as indicated on the Drawings.

3.03 CONTROLS

A. HVAC controls including air conditioning thermostats will be furnished and installed under Division 23 Sections.

3.04 TESTS

A. General: As per Section 23 05 10.

B. The systems shall be placed in operation and shall be regulated and adjusted by the Contractor to the satisfaction of the Architect.

C. The systems shall be adjusted to eliminate noise and insure proper functioning of controls.

D. The systems shall operate quietly and without objectionable vibration.

E. The air balancing shall be as specified in section 230593.

F. Upon completion of construction and immediately prior to air balancing, install a second set of filters in all equipment requiring filters.

3.05 OPERATING AND MAINTENANCE INSTRUCTIONS

A. The Contractor shall instruct the Owner's Representative, who will operate the system about the operation and maintenance or the equipment.

B. The Contractor shall deliver to the Owner two (2) copies of Operating and Maintenance Manuals for Air Conditioning Systems furnished and installed under Section 23 70 00.

3.06 GUARANTEE SERVICE CALLS

A. General: As per Section 23 05 00.

B. During the guarantee period the Contractor shall provide repair service within 24 hours after receiving a request for service from the Owner.

END OF SECTION

SECTION 26 10 00 - GENERAL ELECTRICAL SPECIFICATIONS (rev 09-18)

PART 1 - GENERAL

1.1 WORK INCLUDED

A. This specification shall apply to all phases of Work hereinafter specified, shown on Drawings, or as required to provide a complete installation of electrical systems for this Project. Work required under this specification is not limited to just the Electrical Drawings - refer to Architectural, Structural, Landscape, and Mechanical/Plumbing Drawings, as well as all other drawings applicable to this project, which designate the scope of work to be accomplished. The intent of the Drawings and Specifications is to provide a complete and operable electrical system that includes all documents that are a part of the Contract.

1. Work Included: Furnish labor, material, services and skilled supervision necessary for the construction, erection, installation, connections, testing, and adjustment of all circuits and electrical equipment specified herein, or shown or noted on Drawings, and its delivery to the Owner complete in all respects ready for use.

2. The electrical Work includes installation or connection of certain materials and equipment furnished by others. Verify installation details, installation and rough-in locations from the actual equipment or from the equipment shop drawings.

B. Electrical Drawings: Electrical Drawings are diagrammatic, and are intended to convey the scope of work, indicating intended general arrangement of equipment, conduit and outlets. Follow Drawings in laying out Work and verify spaces for installation of materials and equipment based on actual dimensions of equipment furnished.

1.2 QUALITY ASSURANCE

A. Design, manufacture, testing and method of installation of all apparatus and materials furnished under requirements of these specifications shall conform to latest publications or standard rules of the following:

1. Institute of Electrical and Electronic Engineers - IEEE

2. National Electrical Manufacturers' Association - NEMA

3. Underwriters' Laboratories, Inc. - UL

4. National Fire Protection Association - NFPA

5. Federal Specifications - Fed. Spec.

6. American Society for Testing and Materials - ASTM

7. American National Standards Institute - ANSI

8. California Electrical Code - CEC

9. National Electrical Safety Code - NESC

10. Insulated Cable Engineers Association - ICEA

11. American Institute of Steel Construction - AISC

12. State and Municipal Codes In Force In The Specific Project Area

13. Occupational Safety and Health Administration (OSHA)

14. Electronics Industries Association/Telecommunications Industry Association (EIA/TIA)

15. California Electrical Code (where adopted)

16. Local Authority Having Jurisdiction (AHJ) Published Electrical Standards and Codes

B. Perform Work in accordance with the California Electrical Code, applicable building ordinances, and other applicable codes, hereinafter referred to as the "Code." The Contractor shall comply with the Code including local amendments and interpretations without added cost to the Owner. Where Contract Documents exceed minimum requirements, the Contract Documents take precedence. Where code conflicts occur, the most stringent shall apply unless variance is approved.

1. Comply with all requirements for permits, licenses, fees and codes. The Contractor, at Contractor's expense, shall obtain all permits, licenses, fees, special service costs, inspections and arrangements required for Work under this contract, unless otherwise specified.

2. Comply with requirements of the applicable utility companies serving this Project. Make all arrangements with utility companies for proper coordination of Work.

1.3 GENERAL REQUIREMENTS

A. Guarantee: Furnish a written guarantee for a period of (1) one-year from date of acceptance.

B. Wherever a discrepancy in quantity or size of conduit, wire, equipment, devices, circuit breakers, etc., (all materials), arises on the Drawing and/or Specifications, the Contractor shall be responsible for providing and installing all material and services required by the strictest condition noted on Drawings and/or in Specifications to ensure complete and operable systems as required by the Owner and Engineer.

C. All Core Cutting, Drilling, and Patching:

1. For the installation of work under this Section, the aforementioned shall be performed under this Section of the Specifications and the Concrete section of the Specifications.

2. No holes will be allowed in any structural members without the written approval of the Project's Structural Engineer.

3. For penetrations of concrete slabs or concrete footings, the work shall be as directed in the Concrete Section of Specifications.

4. The Contractor shall be responsible for patching and repairing surfaces where he is required to penetrate for work under this contract.

5. Penetrations shall be sealed to meet the rated integrity of the surface required to be patched and repaired. The patched surface shall be painted or finished to match the existing surface.

D. Verifying Drawings and Job Conditions:

1. The Contractor shall examine all Drawings and Specifications in a manner to be fully cognizant of all work required under this Section.

2. The Contractor shall visit the site and verify existing conditions. Where existing conditions differ from Drawings, adjustment(s) shall be made and allowances included for all necessary equipment to complete all parts of the Drawings and Specifications.

1.4 WORK IN COOPERATION WITH OTHER TRADES

A. Examine the Drawings and Specifications and determine the work to be performed by the electrical, mechanical and other trades. Provide the type and amount of electrical materials and equipment necessary to place this work in proper operation, completely wired, tested and ready for use. This shall include all conduit, wire, disconnects, relays, and other devices for the required operation sequence of all electrical, mechanical and other systems or equipment.

B. Provide a conduit-only system for low voltage wiring required for control of mechanical and plumbing equipment described in this or other parts of the Contract Documents. Install all control housings, conduits, and backboxes required for installing conductors to the controls.

C. Install separate conduits between each heating, ventilating and air conditioning sensing device and its control panel and/or control motor. Before installing any conduit for heating, ventilating and air conditioning control wiring, verify the exact requirements from the control diagrams provided with the equipment manufacturer's shop drawings.

1.5 TESTING AND ADJUSTMENT

A. Upon completion of all electrical work, the Contractor shall test all circuits, switches, light fixtures, lighting control and dimming systems including distributed systems, UPSs, generators, SPDs, lighting inverters, transfer switches, motors, circuit breakers, motor starters and their auxiliary circuits and any other electrical items to ensure perfect operation of all electrical equipment.

B. Equipment and parts in need of correction and discovered during such testing, shall be immediately repaired or replaced with all new equipment and that part of the system shall then be retested. All such replacement or repair shall be done at no additional cost to the Owner.

C. All circuit(s) shall be tested for continuity and circuit integrity. Adjustments shall be made for circuits not complying with testing criteria.

D. All test reports, including copies of any required Energy Code Acceptance Forms (e.g. CA Title 24 Acceptance for Code Compliance Forms) should be submitted to the Engineer at completion of project.

1.6 IDENTIFICATION

A. Nameplates shall be provided for unit substations, switchgear, switchboards, distribution boards, distribution panels, panel boards, motor control centers, transformers, transfer switches, contactors, starters, disconnect switches, enclosed circuit breakers/switches, inverters, UPSs, PDUs, RDCs, SPDs, lighting control panels, dimming panels, door releasing system panels, fire alarm/central monitoring terminal cabinets/power supplies/control panels, and all low voltage system terminal and control cabinets.

1. Nameplate inscriptions shall be identical to the equipment designations indicated in plans and specifications. Nameplates shall be engraved with the device designation/identification on the top line, source identification for the device on the 2nd line per CEC Art 408.4 and load designation for the device on the bottom line. Where load designation consists of a branch circuit, omit bottom line. Where device designation is not indicated on plans/specifications, Contractor shall submit a written clarification request to the Engineer.

Example: Transformer 1TA
Source Disconnecting Location: Switchboard MSA located in Rm 110
Load: Panels 1LA and 1 LB

2. All circuit breakers/fuses in switchgear, switchboards, distribution boards, distribution panels, UPS output circuit breakers, PDU sub-feed circuit breakers and motor control centers shall have individual nameplates located immediately adjacent to the respective device. Nameplate inscription shall identify the downstream equipment or device served by the circuit breaker or fuse.

B. Identification nameplates, UON, shall be laminated/extruded modified acrylic that is 3/32" thick, UV-stabilized, matte finish, suitable for use in 180 deg. F ambient, with beveled edges and engraved white letters 3/8" high, minimum, on 1-1/2" high black background (utility/normal and optional standby power systems) for single line of text. Where two lines of text are required, provide minimum 2" high nameplate. Where three lines of text are required, provide minimum 2.5" high nameplate. Provide white letters on red background for all CEC Article 517 essential power systems, Article 700 Emergency Systems, Article 701 Legally required standby systems and Article 708 COPS.

C. Identification nameplates for new switchgear, switchboards, distribution boards, distribution panels, panel boards and motor control centers shall be attached with switchgear manufacturer-provided screws via switchgear manufacturer factory pre-drilled holes. A factory option to rivet identification nameplates to the equipment is only acceptable if screw-fastened nameplates are not an available option from the switchgear manufacturer. Field drilling or other mechanical attachment methods that change/void the NEMA or NTRL rating of the enclosure are strictly forbidden.

D. Identification nameplates for transformers, transfer switches, disconnect switches, enclosed circuit breakers/switches, inverters, UPSs, PDUs, RDCs, SPDs, lighting control panels, dimming panels, door releasing system panels, terminal cabinets and all circuit breakers/fuses in switchgear, switchboards, distribution boards, distribution panels, UPS output circuit breakers, PDUs, PDU sub-feed circuit breakers, and motor control centers shall be attached to the equipment by self-adhesive backing integral to the nameplates.

When equipment is located outdoors, provide nameplates without self-adhesive backing and attach to equipment using weather-rated, UV-resistant epoxy. In all cases, clean surfaces before applying identification nameplates parallel to equipment lines.

E. Warning Placards, as required by General Single Line Diagram Notes for multiple power sources, or instruction placards, as required for all kirk-key interlock schemes, all UPS bypass procedures or as required elsewhere in the plans/specifications shall be engraved 1/2" high white lettering on a red background using the same material specified for identification nameplates with a self-adhesive backing. Warning/instruction placards shall be attached to the face of the equipment directly related to the placards. Provide a formal placard submittal for review by the Engineer prior to ordering any warning/instruction placards. In all cases, clean surfaces before applying warning/instruction placards parallel to equipment lines.

F. Receptacles that are part of a UL-listed under floor computer room whip assembly, ceiling and/or cable/ladder tray-mounted receptacles used in lab, manufacturing, commercial kitchen environments or that are serving telecom/data/AV racks and cabinets shall have identification nameplates located on the wiring device plate cover. Nameplates shall be self-adhesive, 3/32" thick Micarta with beveled edges, engraved 1/4" high white lettering on black background with serving power source, circuit identification and NEMA/IEC receptacle type. Use of two (2) separate nameplates per device plate cover is acceptable. Affix nameplates to be visible when plugs are occupying receptacles.

G. See wiring device section of this specification for wiring device plate cover labeling requirements.

H. See drawings for panel board schedule directory installation requirements.

I. See conduit installation section of this specification for conduit labeling requirements.

1.7 FINAL INSPECTION AND ACCEPTANCE

A. After all requirements of the Specifications and/or the Drawings have been fully completed; representatives of the Owner will inspect the work. Contractor shall provide competent personnel to demonstrate the operation of any item or system to the full satisfaction of each representative.

B. Final acceptance of the work will be made by the Owner after receipt of approval and recommendation of acceptance from each representative.

1.8 RECORD DRAWINGS

A. Drawings of Record: The Contractor shall provide and keep up-to-date, a complete record set of drawings. These shall be corrected daily and show every change from the original Drawings. This set of prints shall be kept on the job site and shall be used only as a record set. This shall not be construed as authorization for the Contractor to make changes in the layout without definite instruction in each case. Upon completion of the work, a set of reproducible Contract Drawings shall be obtained from the General Contractor and all changes as noted on the record set of prints shall be incorporated thereon with black ink in a neat, legible, understandable and professional manner. Refer to the Supplementary General Conditions for complete requirements.

1.9 APPROVALS, EQUALS, SUBSTITUTIONS, ALTERNATIVES, NO KNOW EQUAL

A. Approvals: Where the words (or similar terms) “approved”, “approval”, “acceptable”, and “acceptance” are used, it shall be understood that acceptance by the Owner, Architect and Engineer are required.

B. Equal: Where the words (or similar terms) “equal”, “approved equal”, “equal to”, “or equal by”, “or equal” and “equivalent” are used, it shall be understood that these words are followed by the expression “in the opinion of the Owner, Architect, and Engineer.” For the purposes of specifying products, the above words shall indicate the same size, made of the same construction materials, manufactured with equivalent life expectancy, having the same aesthetic appearance/style (includes craftsmanship, physical attributes, color and finish), and the same performance.

C. Substitution: For the purposes of specifying products, “substitution” shall refer to the submittal of a product not explicitly approved by the construction documents/ specifications.

1. Substitutions of specified equipment shall be submitted and received by the Engineer ten (10) days prior to the bid date for review and written approval. Regulatory Agency approval for all substitutions will be the sole responsibility of the Contractor. To receive consideration, requests for substitutions must be accompanied by documentary proof of its equality with the specified material. Documentary proof shall be in letterform and identify the specified values/materials alongside proposed equal values/materials. In addition, catalog brochures and samples, if requested, must be included in the submittal. ONLY PRE-BID APPROVED PRODUCTS, ISSUED VIA A FORMAL BID ADDENDUM TO ALL BIDDERS, WILL BE ALLOWED ON THE PROJECT. REGARDLESS OF THE APPROVAL ON ANY SUBSTITUTION, ALL BIDS SHALL BE BASED ON THE PRODUCTS EXACTLY AS SPECIFIED. PRICING FOR EACH APPROVED SUBSTITUTION SHALL BE INCLUDED IN THE BID SUBMITTAL AS A SEPARATE LINE ITEM.

2. In the event that written authorization is given for a substitution, after award of contract, the Contractor shall submit to the Engineer quotations from suppliers/distributors of both the specified and proposed equal material for price comparison, as well as a verification of delivery dates that conform to the project schedule.

3. In the event of cost reduction, the Owner will be credited with 100 percent of the reduction, arranged by Change Order.

4. The Contractor warrants that substitutions proposed for specified items will fully perform the functions required.

D. Alternates/Alternatives: For the purposes of specifying products, “alternatives/alternates” may be established to enable the Owner/Architect/Engineer to compare costs where alternative materials or methods might be used. An alternate price shall be submitted in addition to the base bid for consideration. If the alternate is deemed acceptable, written authorization will be issued.

E. No Known Equal: For the purposes of specifying products, “No Known Equal” shall mean that the Owner/Architect/Engineer is not aware of an equivalent product. The Contractor will need to submit a “Substitution” item, per the requirements listed above, if a different product is proposed to be utilized.

1.10 SHOP DRAWINGS/SUBMITTALS

A. Shop Drawings/Submittals, unless required otherwise by general project specifications or instructions to bidders, shall be submitted in electronic format (PDF) to include a Letter of Transmittal (PDF), which shall give a list of the drawings submitted with dates and/or system(s) components contained within the submittal. Drawings and material cut sheets shall be complete in every respect and edited/marked to indicate specific items being provided. Printed/Hard copies are not acceptable.

B. The Shop Drawings/Submittals shall be marked with the name of the project, numbered consecutively, and bear the approval of the Contractor as evidence that the Contractor has checked the Drawings. Any Drawings submitted without this approval will be returned to the Contractor for resubmission.

C. If the shop drawings show variations from the requirements of the Contract because of standard shop practice or other reasons, the Contractor shall make specific mention of such variations in the Contractor's letter of transmittal. If the substitution is accepted, the Contractor shall be responsible for proper adjustment that may be caused by the substitution. Samples shall be submitted when requested.

D. Only products listed as "Equal" within the contract documents, along with formally approved "Substitutions" will be reviewed. Products not conforming to these items will not be reviewed and will be returned to the Contractor for re-submittal.

E. Review comments used in response to shop drawings/submittals are:

1. "No Exception Taken" - Product approved as submitted.

2. "Furnish as Corrected" - Re-submittal not required, although the Contractor shall provide the submitted product with corrections as noted.

3. "Revise and Resubmit" - Re-submittal required with corrections as noted.

4. "Rejected" - Re-submittal required based upon the originally specified product.

F. Shop drawings shall be submitted on the following but not limited to:

1. Lighting Fixtures, Lamps, and Ballasts.

2. Switchgear, Switchboards, Distribution Boards, Motor Control Centers, Panel boards, and Bus Ducts; complete with overcurrent device information.

3. Transformers.

4. Fire Alarm System/Central Monitoring System.

5. Wiring Devices.

6. Lighting Control System/Dimming System Products.

7. Pullboxes and Underground Vaults.

8. Terminal Cabinets

9. Lighting Inverters, UPSs, RDCs, PDUs, Generators, Transfer Switches, SPD Systems.

10. Cable Tray, Flexible Cable Tray and Cable Runway.

11. Power Poles and Floor Boxes.

12. Arc Flash, Short-Circuit and Coordination studies.

13. All other products called out on drawings that call for shop drawing submittal.

1.11 MAINTENANCE, SERVICING, INSTRUCTION MANUALS AND WIRING DIAGRAMS

A. Prior to final acceptance of the job, the Electrical Contractor shall furnish to the Owner at least four (4) copies of operating, maintenance, and servicing instructions, as well as four (4) complete wiring diagrams for the following, but not limited to, items or equipment:

1. Lighting Control System/Dimming Systems.

2. Fire Alarm System.

3. Transformers.

4. Switchgear, Switchboards, Distribution Boards, Motor Control Centers, Panel boards, and Bus Ducts; complete with overcurrent device information

5. Lighting Inverters, UPS's, PDUs, Generators, Transfer Switches, SPD Systems

B. All wiring diagrams shall specifically cover the system supplied. Typical drawings will not be accepted. Four (4) copies shall be presented to the Owner.

1.12 INTERRUPTION OF SERVICE/SERVICE SHUTDOWN

A. Any interruption of electrical services, electrical circuits, electrical feeders, signal systems, communication systems, fire alarm systems, etc. required to perform work, shall meet the specific prior-approval requirements of the Owner. Such work shall be scheduled with the Owner to be performed at the Owner's convenience.

B. Interruptions/outages of any of the Owner’s systems and services mentioned above shall be scheduled to occur during other than the Owner’s normal business hours. Any overtime costs shall be borne by the Contractor.

C. See drawings for any additional requirements regarding outages, interruption and any temporary services required.

D. For any shut down of any life safety system provide a fire watch. See DSA IR F-2 for requirements.

PART 2 - PRODUCTS

2.1 MATERIALS

A. Materials and Equipment: All electrical materials and equipment, including custom-made equipment, shall be new and shall be listed by Underwriter's Laboratories (UL) and bear their label or be listed and certified by a Nationally Recognized Testing Lab (NRTL) that is also recognized by the local Authority-Having-Jurisdiction (AHJ)

B. Switchgear/Switchboards/Distribution Boards/Motor Control Centers:

1. See general single line notes on single line drawing for more information.

C. Panel boards – Branch Circuit:

1. See drawings for panel board schedules and specifications.

D. Transformers:

1. See drawings for transformer schedules and specifications.

E. Lighting Fixtures:

1. See drawings for lighting fixture and lamp schedules and additional specifications. Furnish, install and connect a lighting fixture at each outlet where a lighting fixture type symbol (designated on plans) is shown as being installed. Each fixture shall be complete with all required accessories including sockets, glassware, boxes, spacers, mounting devices, fire rating enclosure and lamps.

2. Ballasts: See lighting fixture schedule notes. All noisy ballasts shall be replaced at no cost to the Owner.

3. Lamps: See lamp/fixture schedule and lamp/lighting fixture schedule notes.

F. Wiring Devices:

1. Provide wiring devices indicated per plan. Devices shall be specification grade. Acceptable manufacturers are Leviton, Pass and Seymour and Hubbell. Provide all similar devices of same manufacturer, unless indicated otherwise. All device colors shall be from the full range of manufacturer standard color options as selected by the Architect. This selection will be made during the shop drawing review process

a. Wiring Devices (Decora)

1)	Convenience Receptacle	#16252- ???
2)	Dedicated Receptacle	#16352-???
3)	Convenience I.G. Receptacle	#16262-IG-???
4)	Dedicated I.G. Receptacle	#16362-IG-???
5)	Convenience G.F.C.I. Receptacle	#GFT1-???
6)	Dedicated G.F.C.I. Receptacle	#GFNT2-???
7)	Convenience Hospital Grade Receptacle	#16252-HG?-???
8)	Dedicated Hospital Grade Receptacle	#16352-HG?-???
9)	Convenience G.F.C.I. Hospital Grade	#GFNT1-HG?
10)	Dedicated G.F.C.I. Hospital Grade	#GFNT2-HG?
11)	Tamper Resistant Convenience Receptacle	#TDR15-???
12)	Tamper Resistant Dedicated Receptacle	#TDR20-???
13)	Tamper Resistant GFCI Receptacle	#GFTR2-???
14)	Tamper Resistant. Convenience. G.F.C.I. Hospital Grade Receptacle	#GFTR1-HG?

15) Tamper Resistant. Dedicated. G.F.C.I. Hospital Grade Receptacle #GFTR2-HG?
16) Weather/Tamper Resistant GFCI Receptacle #GFWT2-???
17) Convenience Simplex Receptacle #16251-???
18) Dedicated Simplex Receptacle #16351-???
19) Recessed Clock Receptacle #5361-CH-???(Non-Decora)
20) Single Pole Switch #5621-2-???
21) Double Pole Switch #5622-2-???
22) Three Way Switch #5623-2-???
23) Four Way Switch #5624-2-???
24) Pilot Light Switch "On" #5628-2-???
25) Pilot Light Switch "Off" #5631-2-???
26) Projection Screen Switch #5657-2-???
27) Low Voltage Momentary Switch #5657-2-???
28) Keyed Switch #1221-2L-???(Non-Decora)
29) Door Jam Switch #1865-???

b. Use of dedicated receptacles is required where plans depict a branch circuit supplying only a single simplex or duplex receptacle. Use of controlled receptacles is required where depicted on plans - see controlled receptacle specifications for additional information.

2. I.G. (isolated ground) receptacle bodies shall be of a basic color specified above with an orange triangle to symbolize isolated ground.

3. H.G. (hospital grade) receptacle bodies shall be of a basic color specified above with a green circle to symbolize hospital grade.

4. When shown circuited with an I.G. conductor, receptacles shall be of an I.G. type. As an example, a NEMA L6-30R denoted on the plans and shown circuited with an I.G. conductor shall be an I.G. version of that receptacle.

5. Wiring devices located in wood finished areas shall generally be black unless otherwise indicated by the Architect.

6. Wiring devices located in mirrors shall generally be white with stainless steel cover plates unless otherwise indicated by the Architect.

7. In addition to other device requirements listed elsewhere in this specification and CEC Articles 406.12 & 517.18, all 125V & 250V, 15A and 20A, non-locking receptacles shall be Tamper-Resistant when located in the following locations:

a. In dwelling units per CEC Article 210.52.

b. In guest rooms and guest suites of hotels and motels.

c. In child care or daycare facilities.

d. In preschool and elementary education facilities.

e. In business offices, corridors, waiting rooms, and the like in clinics, medical and dental offices and outpatient facilities.

f. In a subset of Assembly Areas outlined in CEC Article 518.2 including transportation waiting areas, gymnasiums, skating rinks, and auditoriums.

g. In dormitories.

h. In pediatric care areas per CEC Article 517.18(C).

8. Wiring devices shall be listed “hospital grade”, and so identified, in the following locations:

   a. Patient bed locations within general care areas per CEC Article 517.18(B).

   b. Patient bed locations within critical care areas per CEC Article 517.19(B).

   c. In “other-than-hazardous” anesthetizing locations per CEC Article 517.61(C)(2).

9. Wiring device cover plates located on recessed boxes shall be commercial grade nylon. Plate color shall match wiring device color UON on plans. Cover plates utilized on surface mounted boxes shall be metal. Plastic cover plates are unacceptable.

10. Except as otherwise noted, all wiring device plates on the project shall be labeled with panel and circuit number(s) utilizing a Brother P-Touch labeling system with 1/2" tape (yellow on black) or equal by Herman-Tellerman or Panduit. Locate label on the concealed side of the wiring device plate. Handwritten labels are unacceptable.

11. The Contractor shall provide duplex receptacle outlets in the appropriate configurations necessary to comply with applicable energy code requirements for controlled receptacles and as shown on plans. All wiring devices indicated to be controlled receptacles shall be NEMA-approved, electrical code-compliant with factory markings on the face of the receptacle(s) with the word "Controlled" or utilize further markings and symbols to indicate which receptacles on each outlet is/are controlled. Stickers, field-applied markings or other non-permanent markings are not acceptable. Where a GFCI receptacle outlet is required to be controlled, provide an adjacent controlled duplex receptacle outlet connected on the load side of the GFCI outlet. Generally, one receptacle in a duplex receptacle outlet is required to be controlled. It may be the lower receptacle or upper receptacle based on manufacturer offering. However, the controlled receptacle location within a controlled receptacle outlet shall remain consistent throughout the project. Where an existing duplex receptacle outlet is required to be controlled, provide a new wiring device with the appropriate control configuration necessary to comply with plans. All controlled receptacles shall be connected to a branch circuit controlled by an occupancy sensor-based or relay panel lighting control system. Acceptable manufacturers are Leviton, Pass and Seymour and Hubbell.

12. The following wiring device plates shall have custom engraving:

   a. Key operated switches, switches with pilot lights, and switches for the control of motors, heaters and ventilators. Engraving shall be black and occur on the exposed side of the plate indicating the motor, heater, or ventilator controlled.

   b. Receptacles on optional standby generator and/or UPS power shall have custom engraved plates with the words "Generator" or "UPS" in black letters. In addition, where located in telecommunications closets, IDFs,

server rooms, data centers, labs (wet, dry or electronic) indicate panel board and circuit number.

c. For Health Care Facilities, provide custom engraved device cover plates, for all devices, indicating panel board and circuit number. Devices served by normal/utility power circuits shall have black lettering. Devices served by essential electrical system power circuits shall have red lettering.

d. All stainless steel and nylon device plates shall be engraved using a rotary engraving process except for black lettering on stainless steel device plates which may be accomplished via laser etching process. All lettering shall be 3/16" high. Provide a dimensioned submittal drawing detailing a typical device faceplate with engraving.

G. Weatherproof Outlet Covers/Assemblies: All Receptacles identified as weatherproof on the drawings shall be weather-resistant, tamper-resistant, GFCI type and equipped as follows:

1. Type WP-A: Recessed wall box with a hinged, lockable, cast aluminum, self-closing, gasket-equipped door that is wet location-listed rain tight while "in use". Unit shall comply with CEC Article 406.9(A) and (B). UON on drawings, provide a minimum of 2 separate compartments suitable for installation of power receptacles, AV or communications outlets. Additionally, unless otherwise noted on drawings, provide the following:

a. A 20A weather-resistant, tamper-resistant, GFCI duplex receptacle in the first compartment. Provide branch circuiting per plans.

b. A blank metal plate suitable for field installation of power, AV or communications devices in the second compartment.

c. Where indicated on plans as requiring data, AV, or other low voltage service outlet, provide minimum 3/4" C.O. with pull string routed from the second compartment to nearest low voltage pull box. Where shown mounted in a building wall, any blank/unused compartment shall be equipped min. 3/4" C.O. with pull string routed to the nearest accessible ceiling space.

d. See wiring device section of this specification for additional wiring device plate cover labeling requirements.

e. 1 key minimum per device (minimum of 2 per project) to the Owner's project manager upon completion of project.

f. Custom color powder coat finish as selected by Architect - Include all costs in base bid for same.

g. In locations with sufficient wall depth, provide 6" wide x 6" tall x 5-1/2" deep recessed wall box (C.W. Cole #TL310-WCS-K1-CUSTOM COLOR).

h. In locations utilizing shallow stud walls construction or other walls of insufficient depth, provide 10-3/4" wide x 7-3/8" tall x 3-7/8" deep recessed wall box (C.W. Cole #TL310-WCS-SH-K1 -CUSTOM COLOR).

i. See drawings for additional details.

2. Type/Subscript WP-B: Wet location-listed raintight while "in use" cast copper-free aluminum, extra-duty, lockable cover with baked aluminum lacquer finish and one gang, weather-resistant, tamper-resistant GFCI receptacle. Hubbell WP26E series. Polycarbonate covers are unacceptable. Unit shall comply with CEC Article 406.9(A) and (B). Contractor shall powder coat cover assembly to a custom color where receptacle locations are deemed by the Architect to be in aesthetically sensitive or public spaces. Custom color as selected by Architect.

3. Type WP-C: (C.W. Cole #TL310-WCS-PED-ADA-K1-CUSTOM COLOR or #TL310-WCS-PED-K1-CUSTOM COLOR) pedestal device box with a hinged, lockable, cast aluminum, self-closing, gasket-equipped door that is wet location-listed raintight while "in use". Unit shall comply with CEC Article 406.9(A) and (B). UON on drawings, provide a minimum of 2 separate compartments suitable for installation power receptacles, AV or communications outlets. Additionally, unless otherwise noted on drawings, provide the following:

   a. A 20A weather-resistant, tamper-resistant, GFCI duplex receptacle in the first compartment. Provide branch circuiting per plans.

   b. A blank metal plate suitable for field installation of power, AV or communications devices in the second compartment.

   c. Where indicated on plans as requiring data, AV, or other low voltage service outlet, provide minimum 3/4" C.O. with pull string routed from the second compartment to nearest low voltage pull box.

   d. See wiring device section of this specification for additional wiring device plate cover labeling requirements.

   e. 1 key minimum per device (minimum of 2 per project) to the Owner's project manager upon completion of project.

   f. Include all costs in base bid for ADA version (22.5" tall) of pedestal box. Prior to ordering material, contractor shall coordinate with Architect and/or AHJ to determine which pedestal box locations do not require ADA compliance and may be changed to the standard (11.5" tall) version of the pedestal box.

   g. Custom color powder coat finish as selected by Architect. Include all costs in base bid for same.

   h. See drawings for additional details.

4. Type/Subscript WP-D: Damp location-listed (not-Raintite-in-use) cast copper-free, pad lockable, die-cast aluminum cover with baked aluminum lacquer finish and one gang GFCI receptacle. Hubbell/Rayco 502?/503? Series. Polycarbonate covers are unacceptable. Unit shall comply with CEC Article 406.9(A) and (B). Custom color powder coat finish as selected by Architect. Include all costs in base bid for same.

H. Motor Controllers/Starters: See drawings for motorized equipment schedules and specifications.

I. Circuit Breakers:

1. Service entrance circuit breakers smaller than 400A (Amp) frame shall be thermal-magnetic trip with inverse time current characteristics unless otherwise indicated below. Service entrance main circuit breakers and main circuit breakers, 400A frame and larger, shall be 100% rated, solid-state type as outlined in this specification. All other service entrance circuit breakers, 400A frame and larger, shall be 100% rated, solid-state type as outlined in this specification.

2. All non-service entrance circuit breakers 225A and larger shall be thermal magnetic type and have continuously adjustable instantaneous pick-ups of approximately 5 to 10 times trip rating. Breakers shall have either tamper-resistant rating dials or easily changed trip rating plugs with trip ratings as indicated on the Drawings. Rating plugs shall be interlocked so they are not interchangeable between frames. Additionally, all non-service entrance circuit breakers, 600A frame and larger, located in 480V, 3-phase, 3-wire or 277/480V, 3-phase, 4-wire switchgear, distribution boards, panel boards or busway plugs shall be solid state, 100% rated. Breaker shall have built-in test points for testing long delay, short delay and instantaneous, and ground fault (where shown) functions of the breaker by means of a 120V operated test kit. Contractor shall utilize a test kit capable of testing all breakers 400A and above - at the Engineer's request.

3. All non-service entrance circuit breakers less than 225A shall be molded plastic case, air circuit breakers conforming to UL 489. Provide breakers with thermal magnetic trip units, and a common trip bar for two- or three-pole breakers, connected internally to each pole so tripping of one pole will automatically trip all poles of each breaker. Provide breakers of trip-free and trip-indicating bolt-on type, with quick-make, quick-break contacts. Provide single two- or three-pole breaker interchangeability. Provide padlocking device for circuit breakers as shown on the Drawings.

4. Where a Current Limiting Circuit Breaker (CLCB) is indicated on drawings or as required elsewhere in this specification, provide a UL listed current limiting thermal magnetic circuit breaker(s) UON. An independently operating limiter section within a molded case is not allowed. Coordinate CLCB ratings as required to protect electrical system components on the load side of the CLCB to include, but not limited to, protecting automatic transfer switches, panel boards and lighting control panels.

5. Where a solid-state circuit breaker is indicated on drawings or as required elsewhere in this specification, provide a solid-state circuit breaker with minimum five function complete with built-in current transformers. The five functions shall be independently adjustable and consist of Overload/Long Time Amp Rating, Long Time Delay, Short Time Delay, Short Circuit/Instantaneous Pickup, but may also include Shunt Trip and/or Ground Fault if so indicated on the Drawings. Rating plugs shall be interlocked so they are not interchangeable between frames. Breaker shall have built-in test points for testing long delay and instantaneous, and ground fault (where shown) functions of the breaker by means of a 120V operated test kit. Contractor shall utilize a test kit capable of testing all breakers 400A and above, at the Engineer's request.

6. Circuit breakers, 1200A Frame or larger, or circuit breakers with sensors or adjustable trip settings, 1200A or larger, shall be equipped with an Energy Reducing Maintenance Switch that complies with CEC 240.87 (B) (3) unless specified elsewhere with an alternate arc energy reduction method allowed by this same code section.

7. Ground Fault Interrupting Breakers: Provide with molded plastic case, air circuit breakers, similar to above with ground fault circuit interrupt capability, conforming to UL Class A, Group 1.

8. Arc Fault Interrupting Breakers: Provide with molded plastic case, air circuit breakers, similar to above with arc fault circuit interrupt capability, conforming to UL 1699. Provide on all dwelling-unit circuits supplying bedrooms, sleeping quarters etc. as required to comply with CEC Article 210.12.

9. Tandem or half-sized circuit breakers are not permitted.

10. Series-Rated Breakers: UL listed series-rated combinations of breakers can be used to obtain panelboard-interrupting ratings shown on Drawings. If series-rated breakers are used, switchboards, distribution boards, and panel boards shall be appropriately labeled to indicate the use of series-rated breakers. Shop drawing submittal shall include chart of UL listed devices, which coordinate to provide series rating.

11. Circuit breakers shall be standard interrupting construction. Panelboard shall accept standard circuit breakers up to 100A.

12. Circuit breaker handle accessories shall provide provisions for locking handle in the on or off position.

13. Temperature compensating circuit breaker(s) shall be provided when located in outdoor enclosure(s) or when located in an enclosure subject to high ambient heat due to due nearby industrial processes, etc.

14. Provide 75 degree Celsius-rated conductor lugs/lug kits as required on all circuit breakers to accept conductor quantities and sizes shown on drawings.

15. All circuit breaker terminations shall be suitable for use with 75-degree Celsius ampacity conductors. Listed, dual-rated pin terminals, straight or offset, are acceptable for use to in accommodating oversized or parallel conductor installations.

16. Circuit breakers serving Fire Alarm or Central Monitoring panels and power supplies shall be red in color and lockable in the “ON” position.

J. Disconnect Switches:

1. Non-fusible or fusible, heavy-duty, externally-operated horsepower-rated, 600V A.C: Provide NEMA 3R, lockable enclosures for all switches located on rooftops, in wet or damp areas and in any area exposed to the elements.

2. Fusible switches shall be Class “R” when 600A or less or Class “L” when greater than 600A.

3. Amperage, Horsepower, Voltage and number of poles per drawings: All shall be clearly marked on the switch nameplate.

4. Provide the Owner’s project manager with one (1) spare set of fuses and two (2) sets of fuse clips/fuses for every set of fuses on the project.

K. Fuses:

1. Provide fuses at all locations shown on the Drawings and as required for supplemental protection:

    a. Fuses shall be manufactured by Bussman, Shawmut, or equal.

    b. All fuses shall be the product of a single manufacturer.

2. Main and Feeder Protection:

    a. Protective devices rated greater than 600A: Provide Bussman Hi-Cap fuses, Class L, current limiting, having an interrupting rating of 200,000A RMS.

    b. Protective devices rated 600A or less: Provide Bussman Class R fuses, Class RK series current limiting fuses, having an interrupting rating of 200,000A RMS.

3. Motor Protection:

    a. Where rating of protective device is greater than 600A, provide Bussman Hi-Cap fuses, Class L, current limiting, having an interrupting rating of 200,000A RMS.

    b. Where rating of protective device is 600A or less, provide Bussman Class RK series current limiting fuses, having an interrupting rating of 200,000A RMS.

    c. Where fuses feeding motors are indicated, but not sized, it shall be the responsibility of the Contractor to coordinate the fuse size with the motor to provide proper motor running protection.

    d. When rejection type fuses are specified (Class RK series) the fuse holder of all switches (specified in other Sections) shall be suitable for the fuses provided.

L. Cable Tray, Flexible Cable Tray and/or Cable Runway:

1. See drawings for Cable Tray, Flexible Cable Tray and/or Cable Runway specifications.

M. Uninterruptible Power Systems (UPS):

1. See drawings for UPS schedules and specifications.

N. Power Distribution Units (PDU):

1. See drawings for PDU schedules and specifications.

O. Generator Systems:

1. See drawings for Generator schedules and specifications.

P. Transfer Switches:

1. See drawings for Transfer Switch schedules and specifications.

Q. Lighting Control/Dimming Systems:

1. See drawings for Lighting Control and/or Dimming Systems schedules and specifications.

2. Wall box dimmers shall be rocker-type as manufactured by Lutron (no known equal except as noted below). Dimmers and dimmer faceplates shall match the color of adjacent switches and faceplates. Dimmers and dimmer faceplates in wood finished areas shall generally be black unless otherwise indicated by the Architect. The Contractor shall obtain written approval of the Architect regarding final dimmer and dimmer faceplate color selection prior to ordering material. Multiple dimmers/switches shall be ganged together with a common cover plate. Provide dimmers as follows:

   a. Incandescent: Lutron DIVA DV-10P or DV-103P (3-way) (1000-Watt max.).

   b. Electronic Low Voltage: Lutron DIVA DVELV-300P or DVELV-303P-(3-way) (300 Watt).

   c. Magnetic Low Voltage: Lutron DIVA DVLV-10P or DVLV103p (3-way) (800-Watt max.).

   d. Fluorescent (3-Wire): Lutron DIVA DVF-103P (single/3way, 8A @ 120V) or DVF-103P-277 (single/3way, 6A @ 277V).

   e. Fluorescent (0-10V): Lutron DIVA DVTV with PP-???H Power Pack.

   f. Fluorescent (Lutron Tu-Wire): Lutron DIVA DVFTU-5A3P with Lutron H.P. module where required.

   g. LED (0 - 10V): Lutron DIVA DVTV with PP-???H Power Pack.

   h. Screw Base CFL/LED: Lutron DIVA DVCL-153P.

   i. Fan Control: Lutron DIVA DVFSQ-F (1.5A @ 120V max, 3 speed, single pole, 3-way).

3. Contractor shall verify if dimmer(s) requires derating when ganged. Contractor shall provide, and provide connections to, additional Lutron Power Modules, Lutron Power Packs, and / or Lutron Interface Modules where required to accommodate loads higher than dimmers standard or derated load-carrying capacity. Note - contractor may to provide a Lutron recommended dimmer type (typically a #DVF-103P unit) to control the necessary power modules or interface devices.

R. Fire Alarm System/Central Monitoring System:

1. See drawings for Fire Alarm System or Central Monitoring System specifications.

S. Surge Protective Device (SPD):

1. See drawings for SPD specifications.

T. Conduit:

1. Galvanized Rigid Conduit (GRC) shall be full weight threaded type steel. Steel conduit shall be protected by overall zinc coating to inside and outside surfaces, applied by the hot dip, metalizing, or sherardizing process.

2. Intermediate Metal Conduit (IMC), shall be hot-dipped galvanized in accordance with UL 1242, and meet Federal Specification WWC-581 (latest revision).

3. Electrical Metallic Tubing (EMT) shall be zinc-coated steel with baked enamel or plastic finish on inside surfaces. EMT shall be dipped in a chromic acid bath to chemically form a corrosion-resistant protective coating of zinc chromate over galvanized surface.

4. Flexible metal conduit shall be constructed of aluminum or hot-dipped galvanized steel strips wound spirally with interlocking edges to provide greatest flexibility with maximum strength. Interior surfaces shall be smooth and offer minimum drag to pulling in conductors. Use only as directed in writing by the Engineer with the exception of 400 Hz feeders and 400 Hz branch circuits which shall be run in flexible aluminum conduit.

5. Liquid-tight conduit (Seal-Tite) shall be galvanized steel flexible conduit as above except with moisture and oil-proof jacket, pre-cut lengths and factory-installed fittings. For outdoor installations and motor connections only unless otherwise noted on drawings.

6. Factory assembled, or off-site assembled wiring systems (such as Metal Clad (MC) Cable, Type AC Cable, Type NM Cable, Type BX Cable, etc.) shall not be used unless otherwise indicated in the Allowed Specification Deviations Section or Deductive/Additive Alternate Pricing Section generally located on the symbols list drawing.

7. When approved for use in the Allowed Specification Deviations Section, generally located on the symbols list drawing, MC cables shall be allowed for lighting branch circuits (homeruns shall be EMT), receptacle branch circuits (homeruns shall be EMT) and poke-thru fed systems furniture homeruns. MC shall not be used where exposed, except for a maximum 6’ length for final connections to light fixtures, or terminate in electrical panelboards or distribution boards. Equipment ground conductor shall be green. Isolated ground conductor shall be green with yellow stripe. Provide 600V rated aluminum or lightweight steel interlocking armor Metal Clad (MC) cable with copper conductors, THHN (90-degree C) insulation, and integral equipment grounding conductor and isolated grounding conductor as required. Type AC cable listed for use in patient care areas for non-essential electrical system branch circuits per CEC Article 517.13 shall be required in such areas in lieu of MC cable. Type AC and MC cable shall not be used for essential electrical system branch circuits. MC cable shall be manufactured to Underwriter Laboratory Standard 1569. See PART 3 - EXECUTION section of this specification for additional installation requirements.

8. Nonmetallic Flexible Tubing (ENT) shall not be used unless otherwise indicated in the Allowed Specification Deviations Section or Deductive/Additive Alternate Pricing Section generally located on the symbols list drawing. Use of ENT, if allowed, is strictly limited to use in CMU walls and parking structures decks or as directed in writing by the Engineer. See PART 3 - EXECUTION section in this specification for additional installation requirements.

9. Non-Metallic Conduit:

a. Polyvinyl chloride (PVC) rigid conduit, Schedule 40, Type II for underground installation only with solvent welded joints, conforming to Underwriters Laboratories, Inc. (UL) requirements, listed for exposed and direct burial application.

b. Conduit and fittings shall be produced by the same manufacturer.

10. Fire-rated MC Cable:

a. 2-hour fire-rated, polymer insulated 600V MC cable listed and conforming to Underwriters Laboratories, Inc. (UL) 2196 and UL 1569 requirements for installation as an Electrical Circuit Protective System for use in complying with CEC Articles 695 and 700. Where adopted, cable sheath shall be suitable for use as a CEC equipment grounding conductor, and shall be listed for use in wet locations to 90 degrees C (Raychem or equal).

b. Cable connectors shall be brass MC connectors.

U. Fittings:

1. Condulet type fittings shall be smooth inside and out, taper threaded with integral insulating bushing and of the shapes, sizes and types required to facilitate installation or removal of wires and cables from the conduit and tubing system. These fittings shall be of metal, smooth inside and out, thoroughly galvanized, and sherardized cadmium plated.

2. Metallic condulet covers shall have the same finish as the fitting and shall be provided for the opening of each fitting where conductors do not pass through the cover.

3. Connector, coupling, locknut, bushings and caps used with rigid conduit shall be steel, threaded and thoroughly galvanized. Bushings shall be insulated.

4. UON all EMT fittings, connectors and couplings installed in concealed locations, areas not considered to be wet or damp locations by the AHJ, or areas not subject to physical damage, shall be steel, zinc or cadmium plated, threadless, compression, steel locking ring type with insulated throat. Where suitable for use, steel set screw fittings are allowed for trades sizes of 2” and smaller. Insulated throat is not required for fittings, connectors and couplings 1” and smaller.

5. All interior and exterior EMT fittings, connectors and couplings, 2” and smaller, installed in exposed or concealed locations that are considered by the AHJ to be wet or damp locations, shall be Raintite-listed, steel, zinc or cadmium plated, threadless, compression, steel locking ring type with insulated throat. If Raintite-listed, EMT fittings, connectors and couplings are unavailable for a given trade size or if conduit is installed in an area subject to damage – provide rigid metallic or intermediate metallic conduits, fittings, connectors and couplings as required.

6. Flexible steel conduit connectors shall be a malleable iron clamp or squeeze type or steel twist-in type with insulated throat. The finish shall be zinc or cadmium plating.

7. Conduit unions shall be "Erickson" couplings, or approved equal. The use of running threads will not be permitted.

V. 600 Volt Conductors - Wire and Cable:

1. All conductors shall be copper. Provide stranded conductor for #10 AWG and larger or when making flexible connections to vibrating machinery. Use compression "fork" type connectors or transition to solid conductors when connecting to switches, receptacles, etc.

2. Type THHN/THWN-2 thermoplastic, 600 volt, UL approved, dry and wet locations rated at 90 degrees Celsius, for conductors of all sizes from #12 AWG up to and including 1000 kcmil. RHH/RHW insulation is allowed only to provide an Electrical Circuit Protective System to comply with CEC Articles 695 and 700.

3. Wire and cable shall be new, manufactured not more than six (6) months prior to installation, shall have size, type of insulation, voltage rating and manufacturer's name permanently marked on outer covering at regular intervals.

4. Wire and cable shall be factory color-coded by integral pigmentation with a separate color for each phase and neutral. Each system shall be color-coded and it shall be maintained throughout.

5. Systems Conductor Color Coding:

   a. Power 208/120V, 3PH, 4W:

      1) Phase A = Black
      2) Phase B = Red
      3) Phase C = Blue
      4) Neutral = White or White with Phase Color Tracer
      5) Switch legs = Purple (Switch legs shall also be identified separately by numerical tags).
      6) Travelers = Purple with Black stripe or Pink.

   b. Power 480/277V, 3PH, 4W:

      1) Phase A = Brown
      2) Phase B = Orange
      3) Phase C = Yellow
      4) Neutral = Grey or Grey with Phase Color Tracer
      5) Switch legs = Purple (Switch legs shall also be identified separately by numerical tags).
      6) Travelers = Purple with black stripe or Pink..

   c. Ground Conductors: Green

   d. Isolated Ground Conductors: Green with continuous yellow stripe.

   e. Fire Alarm System: As recommended by the manufacturer.

6. All color-coding for #12 through #6 AWG conductor shall be as identified above. Conductors #4 AWG and larger shall be identified with utilizing phase tape at each termination.

7. No conductors carrying 120V or more shall be smaller than #12 AWG.

8. Aluminum conductors shall not be used.

9. Wire-pulling compounds used as lubricants in installing conductors in raceways shall only be "Polywater J". No oil, grease, graphite, or similar substances may be used. Pulling of #1/0 or larger conductors shall be done with an approved cable pull machine. Other methods; e.g. using vehicles and block and tackle to install conductors are not acceptable.

W. Medium Voltage Conductors (greater than 600V):

1. See drawings for Medium Voltage Cable Schedule and Specifications.

X. Junction and Pullboxes:

1. For interior dry locations, boxes shall be NEMA 1 galvanized one-piece drawn steel, knockout type, with removable, machine screw secured covers.

2. For outside, damp or surface locations, boxes shall be NEMA 3R heavy cast aluminum or cast iron with removable, gasketed, non-ferrous machine screw secured covers.

3. For in-grade applications, junction and pull boxes shall be pre-cast concrete or molded fiberglass manufactured by Christy, Brooks-Jensen, or Utility Vault Co. Fiberglass boxes shall:

   a. Be used only in landscape planter areas that are not subject to damage from lawnmowers, tractors and other machinery.

   b. Not be used in lawn or turf areas.

   c. Not exceed 11” W x 17” L in size unless required to be larger to meet code requirements.

4. All boxes shall be sized for the number and sizes of conductors and conduits entering the box and equipped with plaster rings where required.

5. All boxes located in traffic areas shall be traffic rated.

Y. Outlet Boxes:

1. For fixtures, boxes shall be galvanized, one-piece drawn steel, knockout type equipped with 3/8" fixture studs and plaster rings where required.

2. For convenience outlets, wall switches, or other devices, outlet boxes shall be galvanized one-piece drawn steel, knockout type 4" x 4"x 2-1/8" minimum size with plaster rings as required.

3. For locations where standard boxes are not suitable due to number and size of conduit to be terminated, special boxes shall be designed to fit space or meet other requirements, and submitted for approval.

4. For exposure to weather, damp locations, or surface mounting, outlet boxes shall be heavy cast aluminum or cast iron with threaded hubs; covers shall be watertight with gaskets and non-ferrous screws.

5. Outlet boxes used for support of ceiling fans shall be galvanized, one-piece drawn steel, knockout type equipped with bracing bars and plaster rings where required

and listed for ceiling fan support use. Such boxes shall be labeled and capable of supporting ceiling fan weights up to 70 pounds.

6. See drawings for floor box installation notes and specifications.

Z. Plywood Backboards: Where indicated for telephone or communications system terminals or other equipment assemblies, provide backboards of size indicated. Use 3/4" thick x 8' all (length per plans), Douglas Fir, void-free, kiln-dried, fire-rated plywood finished on one side and prime coat painted on all surfaces with finish coat of enamel paint, color by Architect. Leave one (1) fire-rating stamp/sheet exposed for inspection.

AA. Terminal Cabinets:

1. Terminal cabinets shall be fabricated of hot dipped galvanized code gauge sheet metal for flush or surface mounting, complete with barriered sections, a door for each vertically barriered section and sizes as indicated on plan. Doors shall be hinged and lockable. Locks shall be keyed to match the branch circuit panelboards. Terminal cabinet trims shall match the branch circuit panels.

2. Provide each terminal cabinet with a full size mounting backplate.

3. Terminal cabinets shall be installed complete with full-length skirts of the same construction and finish as the terminal cabinet.

4. Where mounted outdoors, terminal cabinets shall be NEMA 3R, weatherproof complete with gaskets and required sealant to prevent moisture from entering the terminal cabinet.

5. All terminal cabinets and terminal cabinet barriered sections shall be labeled by the cabinet or cabinet section use (i.e. CATV, Security, etc.). Labels shall be Micarta type as specified elsewhere in these specifications. Unless otherwise noted, all termination blocks and cables shall be labeled per ANSI/EIA 606 standard.

BB. Painting: Terminal cabinets, panels, junction boxes, pull boxes, etc., and conduit installed in public view shall be painted with colors selected by the Architect to match the subject surfaces. Refer to painting section of the specifications for additional requirements.

CC. Seismic Design, Certification and Anchoring of Electrical Equipment:

1. Contractor shall include all costs in the base bid for labor, materials, all special inspections and structural engineering design necessary to meet the Seismic Design Requirements for Non-structural Components (Chapter 13, ASCE 7-16 Minimum Design loads for Buildings and Other Structures) as required by CBC Section 1708A and as related to the installation all electrical equipment furnished under this contract. See Specific Project Site Seismic Criteria on architectural and/or structural plans which include Building Occupancy Category, Seismic Design Category, Design Spectral Response Acceleration (S_{DS}), Height factor ratio (z/h) and Site Class. Non-structural Component Importance Factor (I_P) for a particular component shall be determined based on the following criteria:

   a. I_P = 1.0: Non-life safety, Non-structural Components in an Occupancy Category IV Facility not required for continued operations of the facility or in any other Occupancy Category Facility where component failure will not impair continued operation of the facility.

b. I_P=1.5: Designated Seismic Systems are those non-structural components in any Occupancy Category IV facility (except as noted above) or that are a part of any code-defined Critical, Life Safety, Emergency and Legally Required Standby Electrical System. Additionally, those non-structural components containing hazardous materials shall be classified as Designated Seismic Systems. While Designated Seismic Systems are generally identified on the plans, they may include items such as generators, automatic transfer switches, UPS units and all associated electrical distribution equipment and components necessary for the designated seismic system to form a complete and operable system. The Contractor shall ultimately be responsible for identifying Designated Seismic Systems. For any electrical component either identified on the plans or determined by the contractor to be a Designated Seismic System, all line and load side electrical distribution systems supporting that Designated Seismic System (including, but not limited to, feeders, panel boards switchboards, transformers, all related component supports and attachments etc.) shall be considered a part of the designated seismic system for the purposes of code-compliance and seismic certification.

c. z/h - Height factor ratio: See plans for respective equipment locations.

2. Provide a delegated-design submittal for each of the following seismic-restraint systems to be used as required:

a. Restraint Channel Bracings consisting of MFMA-4, shop-or field-fabricated bracing assembly made of slotted steel channels with accessories for attachment to braced component at one end and to building structure at the other end, with other matching components, and with corrosion-resistant coating; rated in tension, compression, and torsion forces.

b. Restraint Cables consisting of ASTM A 603 galvanized-steel cables. End connections made of steel assemblies with thimbles, brackets, swivel, and bolts designed for restraining cable service, with a minimum of two clamping bolts for cable engagement.

c. Seismic-Restraint Accessories consisting of hanger rod/hanger rod stiffener assemblies, multifunctional steel connectors for attaching hangers to rigid channel bracings and/or restraint cables, bushings for floor and wall-mounted equipment anchor bolts and resilient isolation washers and bushings.

d. Mechanical Anchor Bolts consisting of drilled-in and stud-wedge or female-wedge type in zinc-coated steel for interior applications and stainless steel for exterior applications. Select anchor bolts with strength required for anchor and as tested according to ASTM E 488.

e. Adhesive Anchor Bolts consisting of drilled-in and capsule anchor system containing resin and accelerator, or injected polymer or hybrid mortar adhesive. Provide specific LEED-compatible environmentally-friendly resins and adhesives on all LEED projects. Provide anchor bolts and hardware with zinc-coated steel for interior applications and stainless steel for exterior applications. Select anchor bolts with strength required for anchor and as tested according to ASTM E 488.

3. Submittal shall include design calculations and details for selecting seismic restraints complying with performance requirements, design criteria, and analysis data signed and sealed by the contractor's structural engineer responsible for their preparation. Calculations shall include, but not be limited to, static and dynamic loading caused by equipment weight, operation, and seismic and, if applicable, wind forces required to select seismic and, if applicable, wind restraints and for designing vibration isolation bases. Provide seismic and wind-restraint detailing to support system selection, arrangement of restraints, attachment locations, methods, and spacings with all components identified to include their strengths, directions and values of forces transmitted to the structure during seismic events and association with vibration isolation devices. Sizes of components shall be selected so strength will be adequate to carry present static and seismic loads to accommodate 25% spare future capacity within specified loading limits.

4. Any pre-approval and evaluation documentation shall have a California Office of Statewide Health Planning and Development (OSHPD) Special Seismic Certification Preapproval (OSP) demonstrating horizontal and vertical load testing and analysis showing maximum seismic-restraint ratings, by ICC-ES or another agency acceptable to authorities having jurisdiction. Ratings based on independent testing are preferred to ratings based on calculations. If preapproved ratings are not available, submittals based on independent testing are preferred. Calculations (including combining shear and tensile loads) that support seismic-restraint designs must be signed and sealed by a qualified professional engineer.

5. Coordinate the location of embedded connection hardware with supported equipment attachment and mounting points and with requirements for concrete reinforcement and formwork specified elsewhere in the project specifications.

6. Install flexible connections in runs of raceways, cables, wireways, cable trays, and busways where they cross seismic joints, where adjacent sections or branches are supported by different structural elements, and where connection is terminated to equipment that is anchored to a different structural element from the one supporting them as they approach equipment. Flexible connection limitations of the CEC shall apply.

7. Install seismic-restraint devices using methods approved by OSHPD or an agency acceptable to authorities having jurisdiction providing required submittals for component.

8. Multiple Raceways or Cables: Secure raceways and cables to trapeze member with clamps approved for application by OSHPD or an agency acceptable to authorities having jurisdiction.

9. The contractor shall engage a qualified testing agency to perform tests and inspections as listed in other Project Specifications, but as a minimum shall include at least four of each type and size of installed anchors and fasteners selected by Architect. Schedule tests with Owner, through Architect, before connecting anchorage device to restrained component (unless post connection testing has been approved), and with at least seven days' advance notice. Obtain Architect's approval before transmitting test loads to structure. Provide temporary load-spreading members as required. Test to 90 percent of rated proof load of device. Prepare and submit test and inspections reports.

DD. Trenching and Backfilling: Contractor shall be responsible for trenching and backfilling. Refer to Trenching and Backfilling section of the specifications for complete requirements.

PART 3 - EXECUTION

3.1 PREPARATION AND INSTALLATION

A. Installation of Conduit and Outlet Boxes:

1. All conduit installed in the dry walls or ceilings of a building shall be steel tube (EMT), aluminum tube (EMT), or Intermediate Metal Conduit (IMC). Flexible conduit shall not be used in lieu of EMT, IMC or rigid conduit except as noted herein.

2. Galvanized rigid conduit (GRC) or intermediate metal conduit (IMC) shall be used as follows:

   a. When noted on the drawings.

   b. When considered exposed to damage by the local AHJ.

   c. When installed in wet or damp locations and of a trade size where listed-Raintite fittings, connectors, couplings etc. are unavailable.

   d. When required by CEC Article 517.13.

   e. When installed in concrete and masonry. The use of ENT in CMU walls and parking structures may be allowed only as directed in writing by the Engineer. Request for ENT substitution must be made prior to bid and in accordance with pre-bid substitution requests requirements of these specifications.

3. Intermediate metal conduit (IMC), is approved for use in all locations as approved for GRC or steel-tube EMT and in accordance with CEC Article 342.

4. Flexible steel conduit shall only be permitted to be used at light fixture outlets and connections to vibrating electrical equipment. Except when concealed in walls or other structural elements, all flexible steel conduit runs shall be less than 6'-0". All outdoor installation shall be made using liquid-tight flex with approved fittings. Include a separate insulated green ground conductor sized per CEC in each conduit. Other uses of flexible conduit shall be allowed only as approved in writing by the Engineer.

5. Flexible liquidtight conduit shall be installed in lieu of the flexible steel; where required by the CEC in damp and wet location, where exposed to weather, in refrigerated area (65°F or less), and/or between seismic joints. All rotating electrical equipment shall be supplied with flexible, liquid-tight conduit with appropriate slack and shall not exceed thirty-six (36) inches. Include a separate insulated green ground conductor sized per CEC in each conduit. Other uses of liquidtight flexible conduit shall be allowed as approved in writing by the Engineer on a case by case basis.

6. Rigid metallic conduit installed underground or embedded in concrete shall be 1” trade size minimum and shall be wrapped with 20 mil. Polyvinylchloride plastic tape, PVC conduit installed underground or embedded in concrete shall be 3/4" minimum trade size.

7. Where required for providing an electrical circuit protective system to comply with CEC Articles 695 and 700 utilize UL Listed 2-hour fire-rated, MC cable or UL Listed 2-hour fire-rated RHH/RHW conductors in conduit.

8. Conduit shall be run so as not to interfere with other piping fixtures or equipment.

9. The ends of all conduit shall be cut square, carefully reamed out to full size and shall be shouldered in fitting.

10. No running threads will be permitted in locations exposed to the weather, in concrete or underground. Special union fittings shall be used in these locations.

11. Where conduit is underground, under slabs or grade, exposed to the weather, or in wet locations, make joints liquid tight and gas tight.

12. All metal conduit in masonry and concrete and where concealed under floor slabs shall have joints painted with thread compound prior to makeup.

13. PVC conduit shall not be run in walls except where approved by the Engineer prior to bid in limited instances that may include concrete or CMU walls used in site retaining, parking structures, or exterior equipment yard or enclosure walls, etc.

14. Where conductors enter a raceway or a raceway in a cabinet, pull box, junction box, or auxiliary gutter, the conductors shall be protected by a plastic bushing type fitting providing a smoothly rounded insulating surface.

15. Where conduit extends through roof to equipment on roof area, the Contractor shall provide flashing material compatible with the roofing system as required by the roofing specifications or as required by the Owner's roof warranty. This flashing shall be delivered to the roofing Contractor for installation. The actual location of all such roof penetrations and outlets shall be verified by the Architect/Owner. Contractor to verify type of flashing prior to bid and include all costs.

16. All conduit shall be supported at intervals not less than 6'-0" and within 12" from any outlet and at each side of bends and elbows. Conduit supports shall be galvanized, heavy stamped, two-hole conduit clamp properly secured.

17. Where conduit racks are used the rack shall consist of two-piece conduit clamps attached to galvanized steel slotted channels, properly secured via threaded rods attached directly to the building structure.

18. Nail-in conduit supports, one-piece set screw type conduit clamps or perforated iron for supporting conduit shall not be used.

19. Seismic Conduit Support:

    a. All conduit shall be supported in such a manner that it is securely attached to the structure of the building. Attachment is to be capable of supporting the tributary weight of conduit and contents in any direction. Maximum spacing of support and braces are to be as follows:

CONDUIT SIZE	MAXIMUM SPACING
1/2" to 3"	6'-0"
3-1/2" to 4"	8'-0"

20. All conduit runs shall be installed parallel or perpendicular to walls, structural members, or intersection of vertical planes and ceilings. Field made bends and offset shall be avoided where possible. Crushed or deformed raceway shall not be installed.

21. Open knockouts in outlet boxes only where required for inserting conduit.

22. Locate wall outlet of the same type at same level in all rooms, except where otherwise noted.

23. Outlet boxes on metal studs shall be attached to metal hangers, tack welded or screwed to studs; on wood studs attachment shall be with wood screws, nails are not acceptable.

24. Recessed boxes shall not be mounted back-to-back in any wall; minimum offset shall be 24 inches.

25. Junction Boxes that do not contain any device(s) shall be located in storage rooms, electrical closets, or above accessible ceilings, not in hard lid ceilings or other forms of inaccessible ceilings. Place boxes which must be exposed to public view in a location approved by the Owner's Project Manager. Provide covers or plates to match adjacent surfaces as approved by the Owner's Project manager.

26. Surface mounted pull boxes, terminal cabinets, junction boxes, panel boards etc., shall be attached to walls using appropriate screws, fasteners, backing plates, stud blocking etc., as detailed on architectural and/or structural drawings. If architectural and/or structural drawings are not provided on the project, Contractor shall provide all necessary mounting hardware and backing support to comply with local building code requirements and any additional requirements imposed by the local Authority-Having-Jurisdiction.

27. Sleeves shall be installed where conduit passes through masonry or concrete walls and shall be 24-gauge galvanized steel no more than 1/2" greater in diameter than the outside diameter of the conduit. When located in non-rated structures, caulk conduit sleeve with stone wool and waterproof below grade. When located in fire rated structures, provide UL listed fire stopping system. See fire stopping section of this specification for additional requirements.

28. All boxes shall be covered with outlet box protector, Appleton SB-CK, or similar device/method to keep dirt/debris from entering box, conduit or panels. If dirt/debris does get in, it shall be removed prior to pulling wires.

29. All boxes installed outdoors shall be suitable for outdoor installations, gasketed, screw cover, and painted as directed by the Architect with weatherproof paint to match building.

30. All conduit entries to outdoor mounted panels, cabinets, boxes, etc., shall be made using Myers "SCRU-TITE" hubs Series ST.

31. Provide nylon or a 1/8-inch O.D. polyethylene rope, rated at 250 pounds tensile strength, in all conduits more than 5 feet in length left empty for future use. Not less than 5 feet of rope shall be left at each end of the conduit. Tag all lines with a plastic tag at each end indicating the termination/stub location of the opposite end of the conduit.

32. All multiple conduit runs within suspended ceilings shall be suspended from building structure by means of unistrut hangers/racks, Conduit shall not be allowed to lay on ceiling or be supported from ceiling suspension wires or other suspension system. Support conduit to structure above suspended ceilings 8" minimum above ceiling to allow removal of ceiling tile. Maintain two-inch clearance above recessed light fixtures

33. All exposed conduits and support hardware shall be painted to match the finish of the wall or ceiling to which it is supported.

34. Where conduits or wireways cross seismic joints, provide approved flexible conduit connection or approved expansion/deflection fitting to allow for displacement of conduit in all three axes. Connection shall allow for movement in accordance with design of seismic joint. Non-flexible raceways crossing expansion joints or other areas of possible structural movement shall make provision for 3-way movement at such points by means of expansion/deflection fittings. Fittings shall be installed in the center of their axes of movement and shall not be deflected to make part of a conduit bend, or compressed or extended to compensate for incorrect conduit expansion/deflection fittings(s) complete with ground jumpers. Where necessary, provide approved expansion joints to allow for thermal expansion and contraction of conduit(s). Install expansion joints complete with ground jumpers.

35. Seal all conduits where termination is subject to moisture or where conduit penetrates exterior wall, floor or roof, in refrigerated areas, classified (hazardous areas) and as indicated on the drawings.

36. Except as otherwise indicated on the Drawings or elsewhere in these specifications, bends in feeder and branch circuit conduit 2 inches or larger shall have a radius or curvature of the inner edge, equal to not less than ten (10) times the internal diameter of the conduit. Except where sweeping vertically into a building, and where sweep radius equals ten (10) times conduit diameter, underground communications and building interconnect conduits 3 inches or larger shall have a minimum 12’-6” radius or curvature of the inner edge. For the serving utilities, radius bends shall be made per their respective specifications.

37. Tag all empty conduits at each accessible end with a permanent tag identifying the purpose of the conduit, footage end-to-end, and the location of the other end. In wet, corrosive outdoor or underground locations, use brass, bronze, or copper 16-gauge tags secured to conduit ends with #16 or larger galvanized wire. Inscribe on the tags, with steel punch dies, clear and complete identifying information.

38. The following additional requirements shall apply to underground conduits:

    a. Underground conduit shall be Schedule 40 PVC (polyvinyl chloride) unless otherwise indicated elsewhere in these specifications or as required per CEC Article 517.13.

    b. For all communications conduits 2" and larger and feeders 100A or greater, provide with a minimum 3" inch, (2,000 LB) concrete envelope, 2-inch minimum separation between conduits, installed at depth of not less than 24" below grade. (Provide concrete encasement and/or greater minimum conduit depth as required by the Utility Companies.) Conduit separation within a duct bank shall be maintained using plastic spacers located at 5'-0" intervals. Where power and communication conduits are run in a common trench, a 12-inch minimum separation shall be maintained between power and communication conduits or as required by

Utility Companies. Where concrete encasement is not required by serving utilities for a utility-only duct bank, provide free draining sand bedding suitable to achieve 95% relative compaction based on ASTM D1557 using 6" lifts or directed by Utility Company Standards.

c. In all cases, where any conduit(s) pass under a building slab or footing, the electrical Contractor will provide a Bentonite clay or concrete barrier that conforms to the height and width of the trench excavation extending a minimum of 24" on either side of the foundation. In all cases, where conduit(s) pass through a sleeve in a footing or other foundation element, the electrical Contractor will provide a Bentonite clay or concrete barrier between the sleeve and the conduit(s) surrounding the conduit(s) for the entire depth of the sleeve. The barrier is required to prevent passage of moisture under or through the slab or footing via the trench or sleeve.

d. Where underground conduit passes under a building slab, concrete encasement may not be required, except as required above, contact the Engineer for written direction prior to omitting any encasement.

e. Underground conduits, which terminate inside building(s) below grade, such as in a basement level, or which slope so that water might flow into interior building spaces, shall be sealed at the point of penetration with a modular conduit seal (Link-Seal or equal by Rox Systems). Conduit/conduit sealing system penetrations of waterproofing membranes/systems on existing structures shall be completely restored as required to maintain membrane/system manufacturer and installer warranty for the installation. All conduits shall be provided with a 4% slope away from buildings. All conduits shall be installed such that the water cannot accumulate in the conduit and such that water drains into the nearest manhole, pull box or vault – not into the facility. In instances where grade changes or elevation differences prevent sloping of conduit away from a building into the nearest manhole, pull box or vault or where accumulation of water in a manhole, pull box or vault may result in water traveling into the facility, conduits shall be sealed internally at each end of each conduit using conduit sealing bushing, sized as required for the conductors contained within the conduit (O-Z Gedney #CSBG 100psig withstand or equal). In all cases, install plugs or caps in spare (empty) conduits at both ends of each conduit (Jackmoon or equal) preventing both water and gas from entering the facility via the conduits.

f. Include a separate insulated green ground conductor sized per CEC in each underground electrical feeder/branch circuit.

g. All underground conduits with circuits rated at 40As or greater and all underground communications conduits shall be provided with a metallic marker tape located 12 inches below the finished grade.

h. Where underground conduits sweep into/through slabs, utilize PVC 90 degree sweeps that transition, via female PVC adapter to GRC coupling mounted flush in slab. GRC couplings shall be 1/2 lap taped with 20-mil tape. If the distance of the conduit run between a sweep and the next connecting sweep, pullbox, vault or manhole exceeds 150 ft then the sweep shall be concrete encased. Exceptions:

1) Communications conduits shown terminating at a finished floor shall have an additional 4" high GRC nipple equipped with a

bushing, removable conduit plug, labeling tag and pull rope. Tie off pull rope to conduit plug.

2) Utility conduit sweeps shall be installed per the requirements of the respective utility company.

i. All PVC conduit shall be glued for a water and gas tight installation. The Contractor shall use appropriate solvent on all joints prior to gluing conduit and fittings together.

j. All underground conduit work shall conform to the Federal, State and Local Safety Orders or Rules regarding excavations, trenches and related earthwork. For projects in California, refer to the California Code of Regulations, Title 8, Construction Code Sections 1540 and 1541 for additional requirements.

39. Installation of Metal Clad (MC) Cable (when use is permitted in the Allowed Specification Deviations Section or Deductive/Additive Alternate Pricing Section, generally located on the symbols list drawing).

a. Provide J-box above accessible ceiling prior to running MC cable within partitions or walls. J-box shall be permanently labeled with panel identification and circuit numbers contained within.

b. Overhead MC cable runs shall generally follow building lines to provide a neat and workmanlike installation.

c. Provide code-sized J-boxes to accommodate MC cable splicing in general. For systems furniture poke-through feeds utilizing MC cable, transition from MC cables to conduit and wire near the panelboard in the TI accessible ceiling space on the floor below the panel board via code-sized gutter(s). Utilize UL listed, insulated barrier strips with recessed screw heads (Ideal #89-6?? Series or equal) fastened within the gutter(s), terminate MC conductors on one side of the strips(s) and individual conductors in conduit from the panelboard(s) on the other side of the strip(s). Label each terminal strip(s) with panel designation. Label each phase conductor with circuit number using wire markers (Ideal or equal). Wire nuts are not an acceptable alternative to the terminal strips in these underfloor transition locations. Provide (1) spare 3/4” conduit from each gutter to its respective panelboard.

d. MC cable shall not run directly into panelboards, distribution boards or electrical rooms.

e. MC cabling shall be provided with its own code-approved ceiling support wires, cable hangers, individual spring steel support clips, steel trapeze hangers, threaded roads or dedicated #10 AWG drop wire. Cable supports shall be fastened to concrete slabs, beams, joists or other structural members of the building. In no case shall MC cable rest on ceilings, suspended ceilings or structures. Do not support MC cable using ceiling support wires. The use of nylon cable ties to support MC cable is not allowed.

f. Use lock or spring nut MC cable fittings.

g. Cable runs shall be continuous from wiring device to wiring device – no intermediate splicing J-boxes allowed.

h. When terminating or splicing at a junction, outlet, or switch box, cut the cable with an armored cable rotary cutter such that 6-inches of free conductors remain for connections or splices. Use screw-in or spring lock connector and ensure a proper bonding by firmly tightening the connector to both the box and cable. Insert an anti-short bushing at cable ends to protect conductors from abrasion and use insulated connectors.

i. MC cable bend radius shall not be less than seven (7) times the external diameter of the cable.

j. MC cables passing through fire-rated walls or floors shall be firestopped as required with a UL listed system. See firestopping requirements outlined elsewhere in this specification for additional requirements.

k. Installation shall not exceed code requirements for total current carrying conductors in multiple MC Cable runs bundled together into a single MC cable hanger or strap, unless support device is specifically listed for such purpose. Neutrals shall be counted as current carrying conductors.

l. Maintain MC Cable clearance of at least 6 inches from hot water and any other high temperature pipes. Maintain at least 12-inches clearance between MC cable(s) and telecommunication conduits and cables. MC cable shall cross telecommunication cables and conduits at right angles.

m. MC cabling shall not be run through exposed ceilings, where open grid conditions exist, exposed on walls, or exposed to view. See Power Plan and Lighting Plan General Notes for additional requirements.

40. Installation of Electrical Nonmetallic Tubing (ENT) Cable (when use is permitted in the Allowed Specification Deviations Section or Deductive/Additive Alternate Pricing Section generally located on the symbols list drawing).

a. When approved for use in the Allowed Specification Deviations Section or Deductive/Additive Alternate Pricing Section, generally located on the symbols list drawing, 1/2" and 3/4” trade size ENT shall be allowed for concealed lighting branch circuits, receptacle branch circuits and miscellaneous signal system circuits within concrete floors, walls and columns within parking structures.

b. ENT conduit shall meet the requirements of Underwriters Laboratories Standards 1479 and 1655, NEMA TC-13, and be UL-listed.

c. All ENT conduit, ENT fittings, ENT boxes and ENT accessories shall be UL listed and manufactured by the same manufacturer so as to form a complete ENT system. ENT systems shall only be used if they are listed for use in fire resistance rated concrete floors and ceilings with resistance ratings as indicated elsewhere in the project plans. ENT system shall comply with CEC Article 362.

d. All ENT fittings and ENT boxes shall be concrete-tight listed without the use of tape. Additionally, ENT fittings shall be constructed of high impact PVC and able to resist ENT conduit pull out forces of a minimum of 175

lbs. ENT fittings with fewer than 6 locking tabs for ENT connection shall utilize manufacturer approved glue as additional protection from fitting/conduit separation. ENT conduit to rigid conduit transition fittings shall be equipped with set screw fittings on the rigid conduit side of the fitting. ENT to metal box fittings shall be equipped with a threaded end and lock washer.

e. Where tubing enters a box, fitting, or other enclosure provide a bushing or adapter to protect conductors from abrasion unless the box, fitting, or enclosure design provides equivalent protection.

f. ENT junction boxes shall have brass screw inserts and shall be rated to support lighting fixtures weighing less than 50 lbs.

g. Concrete tight metal boxes shall be used to support pendant hung fixtures or fixtures over 50 lbs.

h. ENT shall be provided in continuous lengths between junction boxes without use of in-line splices or connectors and shall be clearly marked/labeled at least every 10 feet.

i. All ENT conduit containing electrical branch circuits shall contain a code-sized equipment ground conductor.

j. ENT shall transition to EMT, IMC, RMC, or rigid PVC, as appropriate or as called out elsewhere in this specification, for all exposed conduits within/on/under a parking structure.

k. ENT shall transition to appropriately sized PVC expansion joint(s) at all structure expansion or seismic joints.

l. ENT shall be securely fastened and supported every 2 – 3 ft. and within 1 ft. of every junction box and fitting to prevent movement and sag.

m. ENT shall be routed straight without sags, or excessive bending. Where bends are required, comply with Table 362.24 of the CEC for minimum radius of bends. Number of bends shall not exceed quantity allowed by code where used for power and lighting branch circuit and/or feeder conductors. Where utilized for communications system conductors (phones, data cabling, etc.) number of bends shall not exceed the equivalent of (2) 90-degree bends with conduit length no more than 100 feet without installation of a TIA 569-compliant pull box.

n. Separation of ENT from fittings, excessive sags, or deflections in ENT runs that prevent pulling of wire and other ENT system product or system installation failures/errors shall be corrected by saw cutting and patching as necessary at no additional cost to the Owner. Use of surface mounted conduits and junction boxes as a repair method is unacceptable.

o. Empty ENT runs shall be provided with a nylon pull string.

p. Coordinate installation of raceway with structural steel and other structural members. Do not cut, notch or otherwise alter structural members without obtaining approval in writing from the Structural Engineer of record.

q. No more than (2) 3/4” ENT conduits may cross each other within a horizontal concrete slab without obtaining approval in writing from the Structural Engineer of record.

B. Installation of 600-Volt Conductors:

1. All electrical wire, including signal circuits, shall be installed in conduit.

2. All circuits and feeder wires for all systems shall be continuous from over current protective device or switch to terminal or farthest outlet. No joints shall be made except in pull, junction or outlet boxes, or in panel or switchboard gutters.

a. Utilize preinsulated "winged" spring type connectors, 3M Company "Performance Plus" #O/B or #R/Y or equal as required for splices and taps in conductors #6 AWG and smaller. When a spring connector is used in an underground environment or when subject to moisture, utilize a 3M Company Scotchcast 3507G epoxy resin connector sealing pack to seal the spring connector. THE USE OF PUSH-WIRE CONNECTORS (e.g. “WAGO” OR EQUIVALENT) IS STRICTLY PROHIBITED.

b. Wires #4 AWG and larger AWG shall be joined together as follows:

1) When located in an underground environment or when subject to moisture, the splice shall be made with compression connector and sealed by a 3M, or equal, PST cold shrink connector insulator.
2) When located in an interior environment, the splice shall be made with an Ilsco or equal dual rated, insulated splice-reducer connector or multi-tap connector-listed for use with 75/90-degree Celsius rated conductors.

c. Connections to busbar shall be made with dual-rated copper/aluminum one-piece compression lugs. Paralleled conductor connections shall be by mechanical lugs.

3. Thoroughly clean all conduit and wire-ways and see that all parts are perfectly dry before pulling any wires.

4. Install UL approved fixture wire from all lighting fixture lamp sockets into fixture outlet or junction box.

5. For 20A branch circuit wiring, increase #12 conductors to #10 for 120-volt circuits longer than 100 feet and for 277V circuits longer than 150 feet.

6. Conductor Support: Provide conductor supports as required by codes and recommended by cable manufacturer. Where required, provide cable supports in vertical conduits and provide lower end of conduit with a ventilator.

C. Grounding/Bonding:

1. Provide grounding and bonding for entire electric installation as shown on plans, as listed herein, and as required by applicable codes. Included, but not limited to, are items that require grounding/bonding:

a. Conduit, Raceways and Cable Trays.

b. Neutral or identified conductors of interior wiring system.

c. Panel boards, Distribution Boards, Switchgear and Switchboards.

d. Non-current carrying metal parts of fixed equipment.

e. Telephone distribution equipment.

f. Transformers, Inverters, UPS, PDU, RDC, Transfer Switch and Generator Systems.

g. Raised Flooring.

h. Exposed metal in maintenance holes, hand holes.

i. Lightning Protection Systems and Antennas.

j. Metal piping installed in or attached to a building/structure.

k. Metallically isolated structural steel.

l. Metallically isolated underground metal water piping.

m. Elevator hydraulic piston/lift case.

2. In multi-occupancy buildings, Contractor shall bond metal water piping systems instated in, under or attached to a building and/or structure serving individual occupancies where the piping system(s) are metallically isolated from each other. Per CEC ART. 250.104(A)(2) and (4), the bonding conductor shall be sized per Table 250.122 and connected to the switchboard/panel board serving that suite/occupancy.

3. Use of Ground Rods: Furnish and install required number of 3/4" x 10' copper clad ground rods to meet specified resistance, all required grounding wires, conduit and clamps. The size of the grounding conductors shall be not less than that set forth in the latest edition of the California Code of Regulations, Title 24, State of California and CEC, unless otherwise indicated. Rods shall be installed such that at least 10 feet of length is in contact with the soil. Where rock bottom is encountered, the electrode shall be driven at an oblique angle not to exceed 45 degrees from vertical or shall be buried in a trench that is at least 30 inches deep. The upper end of the electrode shall be flush with or below ground level unless the above ground end and the grounding electrode conductor attachments are protected against physical damage. Unless otherwise noted, connection to the grounding electrode conductor may be by compression type or exothermic process connector. Mechanical connectors shall not be used.

4. Grounding System Connection:

   a. Compression connectors shall be unplated copper, manufactured by Burndy, or approved equal, designed specifically for the intended connection.

   b. Exothermic weld-type connectors shall be ‘Cadweld’ manufactured by Erico Products, or approved equal, designed specifically for the intended connection.

c. Mechanical connectors shall not be used.

5. Isolated Ground Receptacles shall have an insulated ground wire connected between the receptacle and the panelboard isolated ground bus. Unless otherwise noted, this ground wire shall not be grounded at any other point, and shall be distinguished from other ground wires by a continuous yellow stripe.

6. Provide separate green equipment ground conductor in all electrical raceways to effectively ground all fixtures, panels, controls, motors, disconnect switches, exterior lighting standards, and noncurrent carrying metallic enclosures. Use bonding jumpers, grounding bushings, lugs, busses, etc., for this purpose. Connect the equipment ground to the building system ground. Use the same size equipment ground conductors as phase conductors, up through #10 AWG. Use CEC Table 250.122 for conductor size with phase conductors #8 and larger, if not shown on the Drawings.

7. Clean the contact surfaces of all ground connections prior to making connections.

8. Ductwork: Provide a flexible ground strap, No. 6 AWG equivalent, at each flexible duct connection at each air handler, exhaust fan, and supply fan, and install to preclude vibration.

9. Motors: Connect the ground conductor to the conduit with an approved grounding bushing, and to the metal frame with a bolted solderless lug. Bolts, screws and washers shall be bronze or cadmium plated steel.

10. Building grounding system resistance to ground shall not exceed 25 ohms unless otherwise noted and should be confirmed by testing.

D. Line Voltage and Low Voltage Power Supplies to all Mechanical Equipment Including Plumbing, Heating and Air Conditioning Units:

1. An electric power supply, including conduit, any necessary junction and/or outlet boxes and conductors and connection shall be furnished and installed by the Contractor for each item or mechanical equipment.

2. Power supplies to individual items of equipment shall be terminated in a suitable outlet or junction box adjacent to the respective item of equipment, or a junction box provided by the manufacturer or the equipment and directed by the Mechanical Contractor. Allow sufficient lengths of conductor at each location to permit connection to the individual equipment without breaking the wire run.

3. The location of all conduit terminations to the equipment is approximate. The exact location of these conduit terminations shall be located and installed as directed by the Mechanical and Plumbing Contractor.

4. Provide power supplies to all plumbing and mechanical equipment, including but not limited to, equipment furnished and installed by Owner or Contractor such as heating and air conditioning equipment, pumps, boilers, auto valves, water coolers, trap primers etc. The installation shall produce a complete and operable system.

5. Unless otherwise noted, the Contractor shall furnish and install all conduit, boxes, wires, etc., for line voltage wiring and low voltage wiring.

6. It is the Contractor's responsibility to verify with the drawings of other trades regarding the extent of his responsibility for mechanical equipment. The bid must include a sum sufficient to cover the cost of the installation.

7. The location of all power supply connection and/or terminations to the mechanical equipment is approximate. The exact locations of these terminations shall be verified with other trades during construction.

E. Prefabricated Equipment: Installation of all prefabricated items and equipment shall conform to the requirements of the manufacturer's specifications and installation instruction pamphlets. Where code requirements affect installation of materials and equipment, the more stringent requirements, code or manufacturer's instructions and/or specifications, shall govern the work.

F. Firestopping:

1. The Contractor shall be responsible for furnishing all material, labor, equipment, and services in conjunction with the selection and installation of a complete, fully functioning, code compliant, UL-listed, fire stop assembly/system(s) as required by project conditions.

2. Each fire stop assembly/system shall have an "F" and/or "T" rating as required by each condition requiring fire stopping. Each fire stop assembly/system shall have a current UL listing, as indicated in the latest edition of the UL Fire Resistance Directory. Contractor shall verify acceptability of all fire stopping methods and system selections with the authority having jurisdiction prior to installation. The Contractor shall install each fire stop assembly/system in accordance with the manufacturer's printed instructions.

3. Each fire stop assembly/system shall be labeled with fire stop manufacturer-furnished label on each side of the fire stopping systems depicting UL # etc.

G. Housekeeping Pads

1. Provide a minimum 3" high housekeeping pad above finished floor/finished grade for all floor-mounted switchgear, switchboards, distribution boards, transformers, motor control centers, etc., flush with the face of the equipment. Located in mechanical central plant(s), other mechanical spaces, and located outdoors, pads shall be flush with the face of the equipment. Confirm pad dimensions with local inspector prior to forming pad to ensure any local code interpretations/conditions are met regarding housekeeping pads.

2. Unless otherwise noted above, provide a minimum 1-1/2" high housekeeping pad above finished floor/finished grade for all interior floor-mounted switchgear, switchboards, distribution boards, transformers, motor control centers, transfer switches etc., flush with the face of the equipment. All housekeeping pad heights are as measured from finished floor or grade. Confirm pad dimensions with local inspector prior to forming pad to ensure any local code interpretations/conditions are met regarding housekeeping pads.

3. Provide a 1-1/2" high housekeeping pad above finished floor/finished for service equipment. Prior to pad rough-in, Contractor shall verify serving utility company's maximum meter height requirements and, if necessary, adjust height of housekeeping pad to comply with those requirements. In indoor applications, the pad shall be flush with the face of the switchgear. In outdoor applications, the

housekeeping pad shall extend a minimum of 4 feet from the front of switchgear/switchboard's weatherproof enclosure. Confirm pad dimensions with local inspector prior to forming pad to ensure any local code interpretations/conditions are met regarding housekeeping pads.

4. All housekeeping pads located in, on or attached to a building shall be seismically braced/connected to the building structure.

END OF SECTION

SECTION 27 10 00 - STRUCTURED CABLING SYSTEMS

PART 1 - GENERAL

1.1 SCOPE OF WORK

A. The work under this section includes all final design, material, equipment, supplies, labor, testing, and accessories required to furnish and install a complete Structured Cabling System (SCS) as indicated on the drawings and as specified herein. These systems shall be defined as all cables, equipment, products, etc, as indicated on the drawings, and mentioned in these specifications.

B. It is the intent of the Drawings and Specifications, which are presented in a "design-build" format, for the Contractor to design, provide and install a complete, fully operational, and tested system.

C. All miscellaneous system components including, but not limited to, cables, cable supports, termination equipment, punch blocks, patch panels, patch cords, device outlets, ladder runway, backboards, equipment racks, equipment cabinets, enclosures, terminal cabinets, equipment grounding, and any other related items shall be furnished and installed complete under this section, such that the system shall perform all functions listed herein in compliance with all of the specified requirements.

D. Schedule is paramount to the project’s success. With this, the SCS Contractor will have to be a team player, continually working with the team to facilitate expeditious design, procurement, and construction processes.

E. This project will be performed in a phased construction format. Each phase of construction will be completely installed, labeled and tested, to the greatest extent physically possible, before moving to the next phase.

F. It is a mandatory requirement that a single Contractor perform the work described in the following specification sections:

1. Section 27 10 00 Structured Cabling System

1.2 RELATED WORK, STANDARDS, DOCUMENTS AND PUBLICATIONS

A. Each agency's relative codes, standards, and recommended practices apply to the voice/data cabling systems and their components as specified herein:

1. American National Standards Institute (ANSI)

a. ANSI T1.404 Network and customer installation interfaces – DS3 and metallic interface specification

2. Building Industry Consulting Service International (BICSI)

a. Telecommunications Distribution Methods Manual (TDMM) – latest edition.

b. Customer Owned Outside Plant Design Manual (CO-OSP) – latest edition.

3. Federal Communications Commission (FCC)

   a. FCC Part 68 Rule

4. American Society for Testing and Materials (ASTM)

   a. E814-02 Standard Test Method for Fire Tests of Through-Penetration Fire Stops

5. International Electrotechnical Commission (IEC)

   a. IEC 61935-01 Generic Cabling Systems - Specification for the testing of balanced communication cabling in accordance with ISO/IEC 11801 Part 1: Installed Cabling

   b. IEC 61935-02 Generic Cabling Systems - Specification for the testing of balanced communication cabling in accordance with ISO/IEC 11801 Part 2: Patch Cords and Work Area Cords

6. Institute of Electrical and Electronics Engineers (IEEE)

   a. IEEE 802 Specification for Local Area Networks, latest edition.

   b. IEEE 802.3an Specification for 10GBASE-T Ethernet, latest edition.

   c. ANSI/IEEE C62.41 – Guide on the Surge Environment in Low-Voltage (1000V or less) AC Power Circuits, latest edition.

7. International Organization for Standardization (ISO)

   a. ISO/IEC 11801 Information Technology – Generic Cabling for Customer Premises, latest edition.

   b. ISO TR 24750 Technical Report

8. National Fire Protection Association (NFPA)

   a. ANSI/NFPA-70 National Electric Code – 2017 version as adopted by AHJ(CEC)

   b. ANSI/NFPA-75 Standard for the protection of information technology equipment

9. National Electrical Manufacturers Association (NEMA)

10. Occupational Safety and Health Administration (OSHA)

11. Telecommunications Industry Association (TIA)

    a. Optical Fibers Suitable for Manufacturing OM4 Cabled Optical Fiber.

    b. TIA-526-7 Optical Power Loss of Installed Single-Mode Fiber Cable

Plant.

c. TIA-526-14-B Optical Power Loss Measurements of Installed Multimode Fiber Cable Plant; IEC 61280-4-1 Edition 2, Fiber-Optic Communications Subsystem Test Procedure- Part 4-1: Installed Cable Plant- Multimode Attenuation Measurement.

d. TIA-568-C.0 Telecommunications Cabling for Customer Premises, latest edition.

e. TIA-568-C.1 Commercial Building Telecommunications Cabling Standard

f. TIA-568-C.2 Twisted-Pair Telecommunications Cabling and Components Standard, latest edition.

g. TIA-568-C.3 Optical Fiber Cabling Components Standard, latest edition.

h. TIA-568-C.4 Broadband Coaxial Cabling and Components Standard

i. TIA-569-C Telecommunications Pathways and Spaces, latest edition.

j. TIA-598-C Optical Fiber Cable Color Coding.

k. TIA-606-B Administration Standard for Commercial Telecommunications Infrastructure, latest edition.

l. TIA-607 Commercial Building Grounding (Earthing) and Bonding Requirements for Telecommunications, latest edition.

m. TIA-758-B Customer Owned Outside Plant Telecommunications Infrastructure Standard, latest edition.

n. TIA-862-A Building Automation Systems Cabling Standard, latest edition.

o. TIA-942-A Telecommunications Infrastructure Standard for Data Centers

p. TIA-1152 Requirements for Field Test Instruments and Measurements for Balanced Twisted-Pair Cabling, latest edition.

12. Underwriters Laboratories Standards (UL)

a. UL 5 Surface Metal Raceways and Fittings, latest edition.

b. UL 5A Nonmetallic Surface Raceways and Fittings, latest edition.

c. UL 5B Strut-Type Channel Raceways and Fittings, latest edition.

d. UL 5C Surface Raceways and Fittings for Use with Data, Signal, and Control Circuits, latest edition.

e. UL 514A Metallic Outlet Boxes, latest edition.

f. UL 514B Conduit, Tubing, and Cable Fittings, latest edition.

g. UL 514C Nonmetallic Outlet Boxes, Flush-Device Boxes, Covers, latest

edition.

h. UL 514D Cover Plates for Flush-Mounted Wiring Devices, latest edition.

i. UL 1685 Vertical-Tray Fire-Propagation and Smoke-Release Test for Electrical and Optical-Fiber Cables, latest edition.

j. UL 1863 Communications-Circuit Accessories, latest edition.

13. Intetek Testing Services ETL SEMKO (ETL)

14. Kern High School District, Master Standards for Data Cabling Infrastructure, latest edition.

B. The Contractor shall be responsible for obtaining and utilizing the latest Structured Cabling, Architectural, Security and Electrical plans.

1.3 GENERAL REQUIREMENTS

A. Manufacturer: The term “manufacturer” shall be defined as the company, or group of companies, that actually produces the products meeting the requirements of Section 2 of this document. The manufacturer shall have a minimum of seven (7) year’s experience in manufacturing products of this type and shall be ISO 9001 Certified. The products, summarized in this specification, shall be supplied by a single manufacturer, with the exception of:

1. Data racks and other hardware that is not defined as part of the copper cable channel test configuration by TIA-568-C.

2. Fiber Optic Cable and Outside plant (OSP) fiber optic cable.

3. Channel solutions consisting of cabling and connectivity hardware independently tested as by UL or ETL and that are listed Section 2 of this document.

4. Cables manufactured by another manufacturer specifically called out on the drawings.

B. Contractor: The term “Contractor” shall be defined as the company, or group of companies, that actually provides the products per Section 2 and installs the products per Section 3 of this document. The Contractor selected to provide the installation of this system shall be certified by the manufacturer in all aspects of design, installation and testing of the products described herein.

1. The Contractor shall hold a valid State of California C-7 Low-Voltage license, shall have completed at least ten (10) projects of equal scope, shall have been in business of furnishing and installing systems of this scope and magnitude for at least the past five (5) consecutive years, and capable of being bonded to assure the District’s Project Manager of performance and satisfactory service during the guarantee period.

2. The Contractor shall have a minimum of one (1) Registered Communications Distribution Designer (BICSI RCDD) and a minimum of two (2) BICSI Technician level installers on staff as full time employees.

3. All work shall be performed under the supervision of a company accredited and

trained by the manufacturer and such accreditation must be presented with the bid submittal. Contractor must be accredited a minimum of 180 days prior to bid submittal date.

4. The Contractor shall be a manufacturer's Authorized Installer and Warranty Station for the equipment offered and shall maintain a fully equipped service organization capable of furnishing adequate repair service to the equipment.

5. All personnel performing work on this project must have successfully completed the manufacturer's training course prior to performance of any work on this project. Accreditation will consist of individual employee certifications issued by the manufacturer. All personnel engaged in the testing of fiber optic and category-6 metallic premise horizontal and distribution systems must have successfully completed the test equipment manufacturer's training. Certification of such training must be presented with the bid submittal.

6. The Contractor selected for this Project shall adhere to the engineering, installation and testing procedures and utilize the authorized manufacturer components and distribution channels in provisioning this Project.

7. The Contractor shall own and maintain tools and equipment necessary for successful installation and testing of fiber optic cable, and Category 6 metallic premise horizontal and distribution systems, and have personnel who are manufacturer trained in the use of such testing tools and equipment.

8. The Contractor shall hold all other licenses required by the legally constituted authorities having jurisdiction (AHJ) over the work.

9. The Contractor shall maintain and provide appropriate liability and worker's compensation insurance coverage.

10. For additional Contractor requirements, see Section 1.06.A.1 (b) of this document in its entirety.

1.4 QUALITY ASSURANCE

A. It is the intent of these specifications to establish an installation standard of quality for labor and materials. For any proposed product substitution or when the Contractor intends to include an "or equal" product in the bid pricing, the Contractor shall provide a "Substitution/Or-Equal Request" submittal to the District's Project Manager for review no later than fifteen (15) calendar days prior to Bid submittal. This report shall include *all* of the following items:

1. Description of how the proposed product(s) will impact meeting the project completion date, indicate all item(s) with lead times and expected delivery date(s).

2. Itemized cost comparisons between the proposed product(s) and the listed product(s).

3. Detailed technical analysis of the electrical and mechanical specification differences between the proposed product(s) and the listed product(s).

4. ETL "Verified" or UL "Verified" test lab documentation for the proposed product(s)

and assemblies proposed.

5. Proposed product identification, manufacturer literature (specifications and cut sheets).

6. Name, address and contact information of several similar projects where the substituted product(s) have been used.

7. Name, address and contact information of the proposed product(s) manufacturer's local representative.

8. Sample proposed product(s) manufacturer's lifetime component and application warranty. Detailed warranty requirements are described in Section 1.10 General System Product Warranty of this document.

B. Failure to provide all items listed in Section 1.4.A.1 through 8 for review by the District's Design Team shall result in rejection of the substitution/or-equal request.

C. The District's Design Team/Project Manager must approve any proposed product(s) substitution/or-equal item in writing. The District's Design Team/Project Manager reserves the right to require a complete sample of any proposed product(s) and may request a sample tested by an independent testing consultant to prove equality. The decision of the District's Design Team/Project Manager regarding equality of proposed product(s) items will be final.

D. If a proposed product(s) is given final acceptance by the District's Project Manager, the Contractor shall reimburse the District's Design Team/Project Manager for the costs to review the proposed product(s) substitution(s), and for any additional engineering charges, and shall pay all charges of other trades resulting from this products use, at no cost to the District.

1.5 GENERAL SUBMITTAL REQUIREMENT

A. Submittals shall be presented and formatted per the guidelines in the Division 1 section of this bid package.

B. All cut sheets shall represent the latest version, part number, and revision of the product. Where multiple products or part numbers appear on a page, a bold arrow or circle shall indicate which product or part numbers are to be used as part of the installation. The submittal shall include all descriptive pages associated with the product, not just the page showing the part number. Contractor submittal shall include a materials list. Cut sheets shall be numbered by and match page numbers of each item included on the material list.

1.6 PRE INSTALLATION SUBMITTAL REQUIREMENTS

A. Within fifteen (15) calendar days after the date of award of the Contract, the Contractor shall submit the following:

1. Submittal Binder: Submit one (1) hard copy and one (1) electronic copy (on compact disk) of the complete Submittal Binder to the Project Engineer for review. The binder shall consist of five (5) major sections with each section separated by Index Tabs. Each page in the binder shall be numbered sequentially and shall be summarized in the Index.

a. The FIRST section shall include the following items:

1) The TITLE SHEET which shall include the Submittal Date, Project Title and Address, Contractor's Name and contact information, and name of the District.
2) The INDEX sheet which shall list each item included in the binder along with the page number where it may be found.

b. The SECOND section shall include the following items:

1) CONTRACTOR'S LICENSE: A copy of the low voltage Contractor's valid State of California C-7 Low-Voltage license.
2) PROOF OF EXPERIENCE: Proof (written documentation) that the low voltage Contractor has been regularly engaged in the business of low voltage contracting consisting of, but not limited to, engineering, fabrication, installation, and servicing of communication systems of the type specified herein for at least the past five (5) consecutive years.
3) PENDING LITIGATION: Provide a statement summarizing any pending litigation involving any officer or principal of/or the company, the nature of the litigation and what effect the litigation may carry as it relates to this work in the worst-case scenario. Non-disclosure of this item, if later discovered, may result, at the District's discretion, in the Contractor bearing all costs and any cost related to the associated delays in the progress of the work.
4) INSURANCE CERTIFICATES: Copy of low voltage Contractor's current liability insurance, workers compensation, and state industrial insurance certificates in conformance with the contract documents.
5) PROJECT LIST: A List containing at least ten (10) California installations completed within the last five (5) years by the low voltage Contractor that are comparable in scope and nature to that specified in the contract document. Provide up to date contact information for each project listed including contact name, title, email address and phone number.
6) SERVICE CAPABILITY: Documentation indicating in detail that the low voltage Contractor has competent engineering, installation, service personnel and facilities with reasonable stock of service parts within 75 air miles of the job site. Do not submit a sales brochure as documentation.
7) AUTHORIZATION LETTERS: Letters from the low voltage equipment manufacturer stating that the low voltage bidding Contractor is a Factory Authorized Distributor/Installer, and is trained and certified for the equipment he proposes to use on this project, and is licensed to purchase and install software required to provide the specified functions.
8) CERTIFICATION: Copy of the following current BICSI certifications. Provide proof that the certificate holders are full time employees of the low voltage Contractor's local facility servicing this project and will be actively involved on site for the duration of this project.

a) BICSI RCDD, minimum of (1). Mandatory requirement: Shall be on site a minimum of one (1) day per workweek.
b) BICSI TECHNICIAN, minimum of (1). Mandatory requirement: Shall be on site a minimum of five (5) full 8-

hour days per workweek.

9) PROOF OF TRAINED PERSONNEL: Documentation that the Contractor has full time on-staff personnel, manufacturer trained and BICSI certified, for the equipment proposed for this project, and on-staff manufacturer trained and certified by the Test Equipment manufacturer in the proper use of the test equipment required on this project. Provide copies of all manufacturers' training/certification documentation, and Test Equipment manufacturer's training/certification documentation. Provide a statement that personnel meeting these qualifications are in the local facility, and will be maintained at that facility throughout the project and the warranty period.

10) DOJ FINGERPRINTING: A fingerprint check must be provided for all personnel working on school sites, performed by the Department of Justice, pursuant to California Education Code Section 45125.1. Fingerprinting shall be performed prior to start of project. All costs associated with DOJ fingerprinting/background checks shall be the full responsibility of the Contractor.

c. The THIRD section shall contain a detailed bill of materials including the quantity, product Manufacturer, product part number, product description, and corresponding specification section number or drawing sheet number where that product is referenced. Also listed in the Contractor's bill of materials shall be each item of test equipment to be used to test the optical fiber, copper and coax components. Include all patch cords and other specialized components. See example format below:

Description	Part #	Quantity	UoM	Spec	Test Equip.
CAT6 Station cable	BerkTek #12345	100 boxes	1000ft/box	2.03	Fluke DTX-1800

1) This information may be used by the District to evaluate the Contractor's general understanding of the project scope during the bid evaluation. Errors or omissions from this bill of material do not relieve the Contractor from providing all material, components, labor, etc., as outlined in this specification and on the drawings to provide a complete and useable structured cabling system.

d. The FOURTH section shall contain original manufacturer cut sheets for all of the materials that meet the requirements listed in Section 2 of this specification and all materials described on the construction drawings. Also include manufacturer's cut sheets for all testing equipment to be used for completion of the project. All pages shall be numbered sequentially corresponding to the bill of materials. On each cut-sheet, provide an indicating arrow next to each part number of proposed material.

e. The FIFTH section shall contain a designation schedule for each system component location and complete full size 30" x 48" (unless otherwise specified) bond drawings (shop drawings), showing system wiring plans. The professionally drafted drawings shall be generated on AutoDesk

AutoCAD 2010 (or later) computer design software. These drawings shall also include:

1) MDF and IDF Diagrams - Including:

   a) Cable routing
   b) Position of all devices, components and apparatus
   c) Detailed elevation layout of the wallfield(s)
   d) Labeling plan (see District labeling requirements)

2) Site Plan – Including:

   a) Conduit routing of all site conduits including size and quantity
   b) Building designations
   c) MDF and IDF locations
   d) Campus cabling and conduit between MDF and IDF racks including cable type and quantity

3) Work Area Floor Plans - Including:

   a) Detailed cable routes including cable type and quantity
   b) Device locations and quantities with labeling
   c) Work area labeling plan (see District labeling requirements)

4) Cross Connect Documentation - Including:

   a) Cross-connect records for all voice and data devices
   b) Cross-connect records may be in either Excel or Word format

5) Riser Distribution Plan
6) Rack elevations of all MDF and IDF equipment
7) ¼-inch scale floor plans of all data rooms (MDF, IDF, MPOE, etc.)

   a) Identify all equipment racks, cabinets, terminals, cross connect locations, ground bus bar, and all other components in room(s).

8) Cable Tray, Conduit, and Raceway Plans (if applicable)

   a) Provide ¼-inch scale ladder runway plan for all data rooms.
   b) Provide scaled plans for all in-building conduit and raceway.

B. Failure to comply with any of the requirements listed above may result in the rejection of the entire submittal package.

1.7 PROJECT DIRECTION

A. Single Point of Contact: Contractor shall provide an English-proficient, single point of

contact, i.e., Project Manager, to speak for the Contractor and shall provide the following functions:

1. Initiate and coordinate tasks with District's Project Manager, and others as specified by District's Project Manager.

2. Provide day-to-day direction and on-site supervision of Contractor personnel.

3. Shall be readily available to the District / District's Project Manager 24 hours a day / 7 days a week throughout the duration of the Project.

4. Shall have full time cellular phone capability, and the ability to send/receive email correspondence, accessible by the District's Project Manager.

5. Ensure conformance with all Contract provisions.

6. Participate in weekly site project meetings and construction meetings.

7. Provide detailed and written weekly status reports to District's Project Manager. The content shall be substantive enough to bring about a full understanding of all situations current and situations future. Weekly reports shall include but are not limited to detailed progress report, RFI status log (Request for Information), Change Order Log (pending and approved), Project Addendum log, and a two-week look ahead work calendar. Each of the above must show assigned responsibilities and event history. Weekly reports shall include milestone information, resource updates (staff and materials), and any conditions or incidents that may impact the Project Schedule.

8. This individual shall remain as Project Manager for the duration of the project. The Contractor may change Project Managers only with the District's Project Manager's written approval.

1.8 PLANNING

A. Planning meetings and schedule: Within fifteen (15) calendar days after the date of award of the Contract, an initial planning meeting will be held with the successful bidder to clarify all requirements (systems, services, distribution methods, etc.), identify responsibilities, and schedule the events that will transpire during the implementation of the project. Within seven (7) calendar days of this initial meeting, the Contractor shall provide a written report and project schedule to clearly document the events and responsibilities associated with the project. Contractor's project schedule shall conform to the overall Project Construction Schedule issued by the Construction Management Company or the District. Contractor is required to attend all planning and other construction meetings as requested by the District, Architect, or Engineer.

1.9 POST INSTALLATION SUBMITTAL REQUIREMENTS

A. Within fifteen (15) calendar days after the completion of work, the Contractor shall submit the following:

1. Record Documentation:

a. Final Test Results – Test results for each cable indicating tests

performed, results obtained and values measured. Test results shall be provided in electronic format with the associated application (if required) for viewing. Contractor shall provide individual test results for each cable tested, and a summary sheet listing all cables, test summary, lengths, and the total cable count. Provide test reports for all copper cables and fiber optic cables. Testing shall be conducted in accordance with Section 3.06 of this document.

b. As-Built records – Contractor shall create and provide all backgrounds and floor plans in AutoCAD or Revit file format. Sheet boarders shall be either provided by, or approved by, the Architect. Contractor's as-built records shall include all of the items described and listed in section 1.6.A.1.e of this document.

B. After as-built submittal is approved by District, the Contractor shall provide two (2) sets of CDs containing all post-installation submittals and close out documentation in AutoCAD (or Revit) format; and in PDF, Word, or Excel formats as required elsewhere in this document.

C. As-Built Documentation Display in Each MDF and IDF: Within fifteen (15) days after the completion of work, the Contractor shall install a complete Contractor-provided, professionally drafted as-built floor plan in color in each MDF and IDF mounting frame. Each floor plan, generated on AutoDesk AutoCAD computer design software and printed in color, shall depict all jack locations in each modular furniture cubicle and all other areas. Also depicted shall be speaker, clock, wireless access point, terminal cabinets, MDF, IDF, pull boxes, vaults, CCTV cameras, television jack locations, or any other communications outlet cables by the SCS Contractor. All jack locations shall be color coordinated with the District's labeling scheme as described elsewhere in this specification. Contractor's device symbols shall match the device symbols utilized on the bid documents. The Contractor will provide to District two (2) sets of CDs containing all as-built records in AutoCAD (.dwg) or Revit (.rvt) format, and full size PDF format

D. Warranty Documentation:

1. Contractor shall apply for all Manufacturers' Extended Warranties on behalf of the District. Contractor shall present to District all product Warranty documents per General System Product Warranty Section of this document. Warranty shall commence after final acceptance of System and Project Close Out by the District.

1.10 GENERAL SYSTEM PRODUCT WARRANTY

A. The horizontal communications cabling system installed shall be eligible for coverage by a Limited Lifetime Warranty to the District.

1. Horizontal channels shall be completed with Leviton Network Solutions factory-terminated copper and/or fiber optic patch cords in order to be eligible for the applicable Berk-Tek or Leviton Warranty with Channel Performance guarantees.

2. Approved product shall be listed on the most recent version of the applicable Berk-Tek Leviton Technologies data sheets for each Berk-Tek Leviton Technologies solution.

B. Optimized Installer/Optimized Integrator shall provide labor, materials, and

documentation in accordance with Berk-Tek and Leviton Network Solutions requirements necessary to ensure that the District will be furnished with a Limited Lifetime Warranty.

C. The installed structured cabling system shall provide a warranty guaranteeing installed channel performance above the ANSI/TIA 568-C requirements for Category 5e, Category 6, and/or Category 6A cabling systems or ISO 11801 requirements for Class D, Class E, and/or Class Ea. Standards-compliant channel performance tests shall be performed in the field with a Berk-Tek Leviton Technologies approved certification tester in the appropriate channel test configuration. See 1.10. A.1 above for channel requirements.

D. Necessary documentation for warranty registration shall be provided to the manufacturer by the installer within 10 days following 100 percent testing of cables. Contractor shall submit test results to Leviton Network Solutions or to Berk-Tek, in the certification test analyzer's original software files. Installer shall ensure that the warranty registration is properly submitted, with all required documentation within ten (10) days of project completion. Optimized Installer / Optimized Integrator must adhere to the terms and conditions of the respective manufacturer's warranty programs.

E. Installer shall ensure that the District receives the manufacturer issued project warranty certificate within sixty (60) calendar days of warranty registration.

F. The first usage date shall be agreed to be in writing by the District and Contractor within five (5) woking days of first usage. During this time, the entire system must be kept in proper operating condition at no additional cost to the District

G. Cable Manufacturer "site certifications" are prohibited.

1.11 GENERAL ENGINEERING AND DESIGN GUIDELINES

A. Cabling System Installation Practices

1. Plastic cable tie (tie wrap) devices shall not be utilized at any time. Only Velcro-type hook-and-loop strap devices are permitted. In the MDF and IDF rooms, all vertically run cables and conductors shall be secured with Velcro at a maximum interval of eighteen (18) inches, and all horizontally run cables and conductors shall be secured with Velcro at a maximum interval of eighteen (18) inches.

2. In the MDF and IDF rooms, all vertically run innerduct shall be secured with Velcro at a maximum interval of eighteen (18) inch intervals. Innerduct installed on ladder runway shall be supported horizontally and vertically at a maximum of eighteen (18) inch intervals.

3. All horizontally run innerduct shall be secured with Velcro at a maximum interval of forty-eight (48) inches when installed horizontal above accessible ceiling spaces or open ceiling spaces.

4. All cables installed above accessible ceiling spaces shall be independently supported.

5. All pull ropes are to be installed and/or replaced in all pathways for future use.

6. All intra-building cabling shall be routed either parallel or at right angles to the building structure and/or walls.

7. No cabling is to be pulled through electrical Condulet bodies (L-bend) devices. If Condulet devices are pre- existing and it is determined, at the review of the District's representative, that sufficient space in the conduit is available and the District provides written approval to utilize the Condulet, the Contractor shall remove the Condulet cap, pull the cable to and beyond the cap then carefully reinstall the cap.

8. Communications cabling shall never be tied or attached to the exterior of electrical conduits, power cables or devices, lighting systems, or co-exist inside any pathway with power cabling.

9. Any visible damage to a cable such as kinks or bends in violation of the minimum bend radius shall render the cable segment defective and shall be removed and replaced by the Contractor at no additional cost to the District.

10. All materials shall be new, unused, and delivered to job site in original manufacturer or distributor cartons or packages. No previously installed material shall be used at any time.

11. Reference Part 3 of this document for additional installation guidelines and requirements.

1.12 SPECIFIC SYSTEM REQUIREMENTS

A. Backbone Infrastructure Cabling

1. Backbone Fiber Optic Cabling

a. Contractor shall provide (1) 12-strand 50/125 micron multimode OM4 fiber optic cable and (1) 6-strand single mode OS2 fiber optic cable for backbone connectivity between the Main Distribution Frame (MDF) location and each Intermediate Distribution Frame (IDF) location, where indicated on the plan drawings. Cable may be composite (MM/SM) type utilizing one overall sheath.

b. At the MDF, provide a 20-foot slack loop neatly coiled and secured. At each IDF, provide a 10-foot slack loop neatly coiled and secured.

c. Splicing of fiber optic cable shall not be permitted unless specifically called out on the bid documents and authorized in writing by the District's engineer.

d. All exposed fiber optic cable shall be enclosed in innerduct. Innerduct is not required within inter-building conduits.

e. Provide 2-meter LC to LC duplex 50 micron fiber optic patch cords at each MDF and IDF. A minimum of two (2) per 6-strands of fiber optic cable installed.

f. Refer to Part 2 of this document for fiber optic cable specifications.

2. Backbone Multipair Copper Cabling

a. Contractor shall provide (1) 25-pair category-5E multipair cable for

backbone connectivity between the local telephone company's minimum point of entry (MPOE) demarcation point and each building on campus, where indicated on the plan drawings.

b. Provide a 10-foot slack loop neatly coiled and secured at both ends of the cable.

c. Splicing of multipair copper backbone cable shall not be permitted unless specifically called out on the bid documents.

d. The multipair backbone cable shall be outdoor-rated and installed in conduit.

e. Provide building entrance protectors at both ends of the backbone multipair cable. Terminate all pairs on the protectors and properly bond the protectors to ground. Refer to section 2.12 PROTECTORS in this document for additional requirements.

f. Contractor shall label backbone cable sheath with a machine generated weatherproof label identifying the cable number, system type (Tele) total pair count, and origination/destination locations. Refer to Labeling Requirements section of this document for additional labeling requirements.

g. Refer to Part 2 of this document for multipair copper cable specifications.

3. MDF/IDF UTP Termination Equipment

a. The horizontal cross-connect for data circuits shall consist of Category-6 patch cords from the horizontal Category-6 termination panels to the network equipment within the same or adjacent racks

b. The MDF and IDF horizontal data cross-connects shall be contained in 19"x 7' rack(s) or free standing lockable cabinet(s) as described in Part 2 of this document, and as detailed on the bid documents/plan drawings.

c. Seven foot high 4-post open racks shall be installed with seven foot high vertical wire management on each side. Patch panels shall be 48 modular jack ports, wired to T568B wiring scheme, and 1RU blank space below each patch panel.

d. Category 6 and category 6A patch cords shall be provided by the Contractor. See Part 2 of this document for additional patch cord requirements

e. See Part 2 of this document for category 6 and category 6A copper cable specifications.

PART 2 - PRODUCTS

2.1 STRUCTURED CABLING SYSTEM

A. Acceptable Manufacturers - all equipment listed herein will be by:

1. SCS components: Leviton, BerkTek, and Paige Datacom (Aquatics Buildings Only)

2. Cabinets, Racks, Ladder tray: Chatsworth, or UL Listed and approved equal.

3. Riser and Outside Plant (OSP) Fiber Optic Cable: BerkTek

4. Riser and OSP Copper Cable: Leviton and Berk-Tek exclusively, or approved equal

5. Protectors: Circa, Emerson or Marconi.

B. It is the responsibility of the bidder to insure that the proposed product meets or exceeds every standard set forth in these specifications and the equipment's technical data sheets.

C. The functions and features specified are vital to the operation of this facility; therefore, inclusion of a component's manufacturer in the list of acceptable manufacturers does not release the Contractor from strict compliance with the requirements of this specification.

2.2 OUTLETS

A. Telecommunications outlets (TO) shall consist of one- or two-gang utility outlet boxes equipped with 8-pin modular (RJ-45) jacks utilizing the T568B wiring scheme and a faceplate. All outlet cabling shall terminate on patch panels at their associated Main Distribution Frame (MDF) room, Intermediate Distribution Frame (IDF) Rooms, or as otherwise indicated on the drawings.

B. Faceplates

1. All Faceplates shall be available in duplex, quad, or six-plex configuration in a single-gang form

2. Surface mount boxes shall be available in dual, quad, and six-plex configuration.

3. Modular furniture faceplates shall be available in dual and quad configuration for the District’s modular existing and/or new modular furniture. Faceplates shall be flush-mounted in the modular furniture. Surface mounted boxes/faceplates are unacceptable. The Contractor is responsible for coordinating with the District’s modular furniture Contractor to determine faceplate requirements. The Contractor shall provide and install all parts/fittings necessary to meet the requirements of this section.

4. Wall mounted phone jack faceplates shall be single gang configuration, constructed of stainless steel and have two standard phone mounting posts located above and below the jack opening. Wall mounted phone faceplates will consist of 8p8c modular (RJ-45) jacks.

5. Faceplates shall have two (2) designation windows, one located at top and one located at bottom. Designation windows shall be equipped with clear plastic covers.

6. Color of faceplates shall match adjacent electrical faceplate color, unless otherwise noted.

7. Provide blank faceplate inserts for all unused outlet locations within the faceplate.

C. Category 6 Gigabit jacks

1. All voice, data, IP speaker, and IP Camera jacks shall be 8-position/8-conductor (8p8c) modular RJ-45 jacks incorporating 110-style rear termination lugs for termination of Category 6 cable, utilize a T568B wiring scheme, and be constructed of high impact thermoplastic housing rated for Category 6 service.

2. All Category 6 jacks shall meet or exceed Category 6 transmission requirements for connecting hardware, as specified in TIA-568-C Commercial Building Telecommunications Cabling Standard.

3. Category 6 jacks shall be channel-rated.

4. Category 6 jacks shall be capable of being in a modular patching situation or as a modular telecommunication outlet (TO) supporting current 10Base-T, Token Ring, 100 Mbps TP-PMD, 155 Mbps ATM, 622 Mbps ATM using parallel transmission schemes and evolving high-speed, high-bandwidth applications, including Ethernet, 1000BASE-T and 1.2 Gbps ATM.

5. Category 6 jack color shall be Black.

6. The jacks shall accommodate UTP cable and work in concert with non-metallic Wiremold 2300 or 5400 series raceway.

7. Product Specification: Leviton eXtreme Cat 6+ quick port connector, #61110-RG6.

-

D. Category 6A 10-Gigabit jacks

1. All wireless access point jacks shall be category 6A 8-position/8-conductor (8p8c) modular RJ-45 jacks incorporating 110-style rear termination lugs for termination of Category 6A cable, T568B wiring type, with a connector body made of high-impact fire-retardant plastic

2. Category-6A jacks shall be channel-rated.

3. All Category 6A jacks shall meet or exceed TIA-568-C.2 component Cat 6A requirements for connecting hardware from 1MHz to 500MHz, 10Gb/s.

4. Cable entry can be 90-degree or 180-degree orientation.

5. Category 6A jacks shall include a pair separation tower to facilitate required conductor separation.

6. The jacks shall incorporate a Cone of Silence, a metalized body, and a printed circuit board to suppress alien crosstalk.

7. Category 6A jack color shall be Green.

8. Category 6A jacks shall be utilized for all wireless access point outlet locations.

9. Category 6A jacks shall only be terminated on Category 6A cables.

10. Product Specification: Leviton eXtreme Cat 6A quick port connector, #6110G-RY6.

2.3 STATION CABLE

A. Station cables shall extend between the station location (TO) and its associated MDF/IDF.

B. Category 6 station cable:

1. The Category 6 cable shall consist of 4-pair, 23-AWG bare copper twisted pairs, unshielded, UTP, and shall be of the traditional round design

2. The cable jacket shall be rated for the environment in which it is installed. Install CMP cable in plenum-rated spaces, CMR cable in riser-rated spaces, and OSP cable in outdoor and underground conduit spaces.

3. Color of cable shall be Blue.

4. Category 6 cable shall be utilized at all voice and data designated outlets.

5. Product Specification: BerkTek LANmark-6 #10136338 (CMR), BerkTek LANmark-6 #10132983 (CMP)

C. Category 6A station cable:

1. The Category 6 augmented (6A) cable shall consist of 4-pair, 23-AWG bare copper twisted pairs with a UTP design

2. The cable jacket shall be rated for the environment in which it is installed. Install CMP cable in plenum-rated spaces, CMR cable in riser-rated spaces, and OSP cable in outdoor and underground conduit spaces.

3. Category 6A cable shall be ETL verified to TIA-568-C.2-10 Category 6A, and support 10GBASE-T IEEE 802.3an standard of 10Gb/s.

4. Color of cable shall be Blue.

5. Category 6A cable shall be utilized for all wireless access point outlet locations.

6. Category 6A cable shall only be terminated on Category 6A-rated jacks and patch panels.

7. Product Specification: BerkTek LANmark-10G2 Cat6A (CMR), BerkTek LANmark-10G2 Cat6A (CMP)

2.4 MODULAR PATCH PANEL SYSTEM

A. The termination block shall support the appropriate emerging high-bandwidth applications, including 1 Gbps Ethernet, potentially 1.2 Gbps ATM and 2.4 Gbps ATM, Multi-Tasked Split Screen Computing, Virtual Holographic Video Conferencing, Instant Access Telemedicine, 3D CAD/CAM Engineering, and Internet-Intranet Communications/ Commerce, as well as all 77 channels (550 MHz) of analog broad band video, including

1000 Mbps Ethernet and potentially1.2 Gbps ATM, and facilitate cross connection and inter connection using modular patch cords.

B. All Modular jack panels shall be wired to ANSI/TIA/EIA 568-C using T568B wiring scheme.

C. The wiring block shall be able to accommodate 23 AWG cable conductors.

D. The Category 6 modular jack panels shall meet or exceed the Category 6 standards requirements in ISO/IEC 11801 and ANSI/TIA/EIA. They shall also be UL Listed.

E. Contractor shall provide Category 6 modular patch panels in sufficient quantities to terminate all category 6 cables.

F. Contractor shall provide Category 6A modular jack panels in sufficient quantities to terminate all category 6A cables.

G. All patch panels shall have two (2) cable strain relief/management bars (Leviton #49005-CMB or equal) installed at the rear of the panel to support the terminated horizontal cabling.

H. Contractor shall provide a 1RU space open immediately below 2 RU patch panel before mounting the next patch panel. This space is reserved for installation of a 1RU network switch to service all ports on the patch panel immediately above.

I. Product Specification: Leviton Quickport Patch Panel with Magnifying Lens Label Holder #49255-L48.

J. Quickport Patch Panel will be separated by Category Data cable type. Example: Cat 6A patch panel will NOT include any Cat 6 jacks unless instructed by the PUHSD's Tech Department.

K. Quickport Jacks colors: Standard data Cat 6 Black, IP Camera Cat 6 Yellow, and Cat 6A Green

2.5 PATCH/STATION CORDS

A. Provide Category 6 Modular Patch/Station cords for each assigned port on the patch panel and for each outlet in the station locations. Cords shall be equipped with an 8-pin 8-conductor modular connector on each end and shall conform to the length(s) specified. All cords shall be wired to T568B wiring scheme. All cords shall be factory-built by the cable manufacturer. Fabrication of cords in the field is prohibited.

B. All category 6 patch cords shall exceed ANSI/TIA/EIA and ISO/IEC Category 6/Class E specifications. Category 6A patch cords shall exceed ANSI/TIA/EIA and ISO/IEC Category 6A specifications.

C. At the MDF and each IDF, provide one (1) 6" or 8"-inch cat-6 patch cord for each cat-6 cable terminated in the patch panels, and provide one (1) 6", 8", 12"-inch cat-6A patch cord for each cat-6A cable terminated in the patch panels. At the workstations, provide one (1) 10-foot cat-6 patch cord for each cat-6 cable terminated at a cat-6 outlet. At wireless access point locations, provide one (1) 3-foot cat-6A patch cord. In instances were longer cords are required, the Contractor shall clarify the requirement with the District before installing any longer cords. Where the specifications and the plan drawings

conflict, the more stringent requirement will apply. Verify patch cords with District prior to ordering product.

D. Category 6 patch cords shall be Blue in color. Category 6A patch cords shall be Green in color.

E. All patch cords shall be channel-rated and include a snagless boot.

F. Category 6 patch cords shall be UL Verified for ANSI/TIA/EIA 568-C Electrical Performance.

G. Category 6A patch cords shall be provided at all Category 6A patch panels and outlets.

H. Product Specification: Verify patch cords with District prior to ordering product.

1. Leviton Cat 6, #6D46I-6L (6” inch), #6D46I-8L (8” inch), #62460-10S (10ft), Blue

2. Leviton Cat 6A, #6AS10-1G (1ft), #6AS10-3G (3ft), Green (verifty with district for 6” and 8” patch cord)

2.6 FIBER OPTIC CABLING

A. 12-strand, OM4, multimode, graded-index, laser optimized fibers with 50/125 micron core/cladding diameter.

B. 6-strand, OS2, single mode fibers with 8.3 micron cores only.

C. Fiber optic cable shall meet or exceed ANSI/EIA/TIA-492 specifications and ISO/IEC 11801 standards.

D. All fibers shall be color coded to facilitate individual fiber identification.

E. Fibers will have dual wavelength capability; transmitting at 850 and 1300nm ranges.

F. Multimode fiber shall be designed to support 10Gb/s applications up to 550 meters at 850 nm.

G. Multimode fiber maximum attenuation @ 850/1300 nm: 3.0/1.0 dB/KM.

H. Single mode fiber maximum attenuation 0.40 dB/km @ 1310 nm: 0.30 dB/km @ 1550 nm.

I. Multimode EMB bandwidth: 4700 MHz-km @850 nm, and OFL bandwidth: 500 MHz-km @1300 nm

J. All fiber in a cable run shall be from the same manufacturer and shall be the same type. A mix of fibers from different manufacturers is prohibited.

K. All fiber optic cable installed inside buildings shall be installed within contractor-provided innerduct. Innerduct shall be rated for the environment in which it is installed. Innerduct shall be orange in color, unless otherwise noted in the bid documents/plan drawings.

L. Outdoor-rated and installed cables shall be loose tube construction. Indoor-rated and installed cables shall be tight buffered construction.

M. Loose tube cables shall be gel free and indoor/outdoor rated.

N. The use of “indoor-outdoor-plenum-rated” cable is acceptable for backbone cable runs between buildings, as long as it meets the cable specifications listed in section 2.6.A through J of this document.

O. Tight buffered cables shall be gel free, riser rated, and plenum rated when installed in a plenum rated environment.

P. Provide buffer tube fan out kits as required.

Q. Product Specification

1. Outside Plant Cables: BerkTek bend-insensitive fiber

2. Building Cables: BerkTek bend-insensitive fiber

2.7 FIBER OPTIC PATCH CORDS

A. Fiber patch Cords shall be available in Single mode and Multimode.

B. Construction shall be either 3.0 mm cordage or 1.6 mm cordage.

C. Connectors shall be available in Duplex LC to LC.

D. The 50-micron multimode fiber optic solution and single mode fiber optic solution shall utilize factory- made patch cords.

E. At the MDF and at each IDF room, provide a minimum of two (2) 2-meter LC to LC duplex OM4 50/125 micron multimode fiber optic patch cords for every 6-strands of multimode fiber optic cable installed. Provide one (1) 2-meter LC to LC duplex single mode fiber optic patch cord for every 6-strands of single mode fiber installed. Verify patch cord length with District prior to ordering product.

2.8 FIBER DISTRIBUTION CENTER (FDC)/FIBER PATCH PANEL

A. Fiber Patch Panels/Enclosures: A rack mount or wall mount enclosure that terminates, provides cross connection, interconnection, splicing and fiber identification from 18 to 360 fiber strands. The shelf will provide protection from mechanical stress on the cable and fibers and from macro-bending losses.

1. The shelf shall be wall or rack mountable depending on the location requirement. The units must fit into a 19” wide frame arrangement and have an integrated jumper routing through.

2. When wall mounted, the shelf shall consist of a modular enclosure with front and side access, and can be fully administered from the front. Wall mount enclosure shall include adjustable fiber management rings, and be constructed of 16-gauge steel, powder coated black.

3. The rack mounted enclosure shall provide front and rear access doors and can be fully administered from the front and rear. The unit shall have integrated sliding tray to allow bulkhead to glide forward or backward after installation.

4. The rack mounted enclosure shall have a transparent hinged front cover to allow visibility of interior after install.

5. Rack mount enclosures shall be available in 1U, 2U and 4U sizes for 19”wide racks, and made of 16-gauge steel powder coated. If a enclosure is or will be full due to additional installation of LC duplex adapter panel, the next larger U enclosures are to be used. Verify enclosure with District prior to ordering product.

6. The adapter/connector plates shall snap into the front of the enclosure and accommodate LC connectors as required. Adapter plates shall utilize ceramic sleeves. Multimode adapter plates shall be aqua in color. Single mode adapter plates shall be blue in color.

7. Provide one (1) 6-port LC duplex aqua adapter panel for every 12-strands of multimode fiber optic cable installed. Provide (1) 6-port LC duplex blue adapter panel for every 6-strands of single mode fiber optic cable installed.

8. Fiber patch panel/shelf shall be labeled according to the District’s specific requirements.

9. Provide quantity of enclosures and adapter panels as required to terminate all strands.

10. Include all buffer tube fan out kits as required.

11. Product Specification:

    a. Leviton #5R1UH-S03 (1RU), #5R2UH-S06 (2RU), #5R4UH-S12 (4RU)

    b. Leviton #5W110-00N, 5W310-00N

    c. Adapter plate 50µm aqua duplex LC Leviton #5F100-2QL

    d. Adapter plate single mode duplex LC Leviton #5F100-2LL

2.9 FIBER OPTIC CONNECTORS

A. Fiber Optic Connectors: Provide a field installable single mode or multimode type connectors to terminate fiber optic cables from cable-to-cable, cable-to-equipment or equipment-to-equipment, and to make jumpers.

1. The connector must:

    a. Be pre-polished and field installable.

    b. Have a ceramic zirconia ferrule.

    c. Be capable of mounting on either 250 um or 900 um buffered fiber.

    d. Single mode shall be rated OS2, and multimode shall be rated OM4.

    e. Average connector insertion loss: multimode 0.1dB, single mode 0.2dB. Maximum insertion loss: multimode 0.5dB. single mode 0.5dB.

f. Be available in LC style for single-mode and multimode.

g. Have a locking feature to the coupler and assure non-optical disconnect.

2. Product Specification:

a. Single mode blue LC, Leviton #49991-SLC

b. Multimode aqua LC, Leviton #49991-LLC

2.10 COPPER CABLING

A. Outside Plant Multipair Copper Cables

1. All outside plant multipair copper cables shall support analog voice circuits (fire alarm, intrusion alarm, elevator phone, etc.) and building energy management systems.

2. All copper cable placed in the outside environment shall be 24 AWG, solid annealed copper, twisted pair, and multi-conductor. Refer to section 1.12.A.2 of this document for additional requirements.

3. The outside plant cable shall be resistant to mechanical damage, lightning or damage from wildlife.

4. The outside plant cable shall have an aluminum shield, conductors surrounded by FLEXGEL III filling compound (or other water-blocking compound), and have a black polyethylene jacket.

5. All outside plant cable shall be installed in conduit. Direct-bury cable is prohibited.

6. Multi-pair voice grade copper cables installed in underground conduit shall be minimum category-6 rated.

7. Product Specification: Berk-Tek's LANmark-6 OSP, or equal.

B. Indoor Multipair Copper (Riser) Cables: In multi-story buildings, shielded or unshielded 24 AWG multipair copper cables shall be used as vertical riser cables between floors. The inner-building cable shall support analog voice circuits (fire alarm, intrusion alarm, elevatorphone, etc.) and building energy management systems. The bending radius and pulling strength requirements of all backbone cables shall be observed during handling and installation. The multi-pair copper cables shall be in plenum or riser rated form and placed in conduit as required by code, or as noted on the bid documents/plan drawings.

1. Shielded: The shielded cable, 25 pair or more, shall consist of solid-copper conductors insulated with expanded polyethylene covered by a PVC skin, be conformance tested to meet ANSI/TIA/EIA 568-C for Category 5E cables, be UL and Listed as CMR. The core shall be overlaid with a corrugated aluminum sheath, which is adhesively bonded to an outer jacket of PVC plastic to form an ALVYN sheath.

a. The cable shall be available in 25, 50, 100, 150, 200, 300, 400, 600, 900, 1200,1500, and 1800 pair counts

b. Product Specification: BerkTek, ARMM type cable.

2. Non-shielded: The non-shielded non-plenum cable shall consist of 24-AWGsolid-copper conductors insulated with color coded PVC, UL Verified to ANSI/TIA/EIA 568-C for Category 5E. The non-shielded cable shall be available in 25, 50, 75 and 100 pair.

a. Product Specification: BerkTek, ARMM type cable, or equal.

2.11 INDOOR MULTIPAIR RISER CABLE TERMINATIONS

A. The multipair riser cable wiring block shall be 110-type (unless otherwise noted) and support analog voice circuits (fire alarm, intrusion alarm, elevator phone, etc.) and building energy management circuits, be Category 5E or 6 rated, and facilitate cross connection and interconnection using either cross connect wire or the appropriate category patch cords.

1. The wiring blocks shall be fire retardant, molded plastic consisting of horizontal index strips for terminating 25 pairs of conductors each. These index strips shall be marked with five colors on the high teeth, separating the tip and ring of each pair, to establish pair location.

2. The wiring blocks shall accommodate 22- through 26-AWG conductors and shall be able to mount directly on wall surfaces either with backboards.

3. Clear label holders with the appropriate colored inserts shall be provided with the wiring blocks. Labels shall be color-coded and machine labeled/numbered according to District's requirements.

4. The wiring blocks shall be available in 100, and 300 pair sizes with mounting legs. The space created by the feet, on each side of the block, allows it to be used as a vertical jumper trough.

5. For each wiring block shown on the drawings, provide and install 110-type

6. 5-pair connecting blocks for each horizontal index strip on each wiring block. For example, a 100-pair wiring block serving station cables requires twenty (20) 5-pair connecting blocks.

B. MPOE/MDF/IDF Rooms, or as otherwise indicated on drawings, shall be equipped with 110-type termination blocks for termination of analog station cables. Termination blocks shall consist of a minimum 100-pair. All blocks shall be securely fastened to the room backboards or equipment racks – refer to bid documents/plan drawings. Provide all required D-rings or other approved cable guides as required to provide a neat installation. All cables shall terminate in numerical sequence. Contractor shall provide District with spare 4-pair (C4) and 5-pair (C5) clips, for future use, in sufficient quantity to terminate all unused positions on all 110-blocks.

2.12 PROTECTORS

A. All outside plant underground backbone multipair copper cables shall be provided with protection between each building with an entrance cable protector panel(s). All building-to-building multipair copper cables shall be routed through this protector(s). The protector(s) shall be connected with a #6 AWG copper bonding conductor between the

protector's ground lug and the MDF/IDF telecommunications ground busbar (TMGB/TBG).

B. Plug in Surge Protection Modules shall be provided for each pair terminated on the protector chassis. Protector module shall be solid-state type unless otherwise noted.

1. 240VDC/300VDC solid-state protector modules shall provide transient and power fault protection for standard telephone line applications. The modules shall be fast acting, self-resetting current limiters to protect against sneak current type faults. These modules shall be UL Listed with integrated test points and Black in color.

2. 30VDC/75VDC solid-state protector modules shall provide transient and power fault protection for digital and data line applications. The modules shall be fast acting, self-resetting current limiters to protect against sneak current type faults. These modules shall be UL Listed with integrated test points and Red in color.

3. In the event that protector modules are not called out in the drawings, SCS Contractor shall include all costs in base bid to provide the 75v solid-state modules w/sneak current protection. Confirm module color with District's Engineer prior to ordering. In all cases, SCS Contractor is responsible to coordinate appropriate module with District prior to ordering material.

C. Product Specification: Circa, Emerson or Marconi.

2.13 GROUNDING SYSTEM AND CONDUCTORS

A. The SCS Contractor shall utilize a Telecommunications Bonding Backbone (TBB) as provided by the Electrical Contractor. The SCS Contractor shall terminate TBB cable(s) on SCS Contractor provided ground bus bars located at each MDF/IDF Room, or as otherwise indicated on the drawings. Ground bus bars shall be ANSI-J-STD-607-A compliant and UL Listed. MDF telecom main ground bus bar (TMGB) shall be Chatsworth #40153-020. IDF telecom ground bus bars (TGB) shall be Chatsworth # 40153-012, or as noted on the drawings. Wall mounted cabinets require a horizontal rack bus bar (Chatsworth #10610-XXX) (equal by Harger). All communication system bonding and grounding shall be in accordance with the ANSI-J-STD-607-A (2019 edition), the CEC, and NFPA.

B. Horizontal cables shall be grounded in compliance with CEC and local requirements and practices.

C. Horizontal equipment including cross connect frames, patch panels, cable trays, equipment racks, ladder trays, conduits, active telecommunication equipment, test apparatus and equipment shall be bonded to the ground bus bars utilizing a #6-AWG solid copper green insulated conductor and 2-hole crimp type grounding lugs. All connections shall be bare metal to bare metal using appropriate antioxidant compound. Burndy mechanical-type grounding lugs and terminals are prohibited. Minimize the length and number of bends of the grounding conductors to the busbar. Attachment to every rack and cabinet shall be made by one of the following methods:

1. Wall mounted IDF cabinets- Attach ground conductor's 2-hole compression lug to the rear rail's top holes of the rack, or front rail's top hole of the cabinet, using either two (2) tri-lobular thread-forming screws (not self-tapping or sheet metal screws) or by using two

2. (2) standard bolts with two (2) “Type B” internal-external tooth lock washers per bolt. If thread-forming screws are not used, remove paint at the connection point and use an approved anti-oxidant prior to attaching the ground conductor.

3. Floor Mounted Cabinet/Racks - Install a dedicated copper horizontal ground busbar strip at the top of the rear rail of each rack and cabinet. Attach ground conductor’s 2-hole compression lug to this ground strip using either tri-lobular thread-forming screws (not self-tapping or sheet metal screws) or by using two (2) standard bolts with two (2) “Type B” internal-external tooth lock washers per bolt.

D. The SCS Contractor shall be responsible for providing an approved ground at all newly installed distribution frames, and/or insuring proper bonding to any existing facilities. The SCS Contractor shall also be responsible for ensuring ground continuity by properly bonding all appropriate cabling, cable sheaths, circuit protectors, closures, cabinets, service boxes, and framework.

E. SCS Contractor shall label both ends of each grounding conductor as close as practical to the point of termination in a readable position. Ground tag must indicate the location of both ends of the ground conductor (e.g. Rack#1 to TMGB) and tag must include the warning “If this connector or cable is loose or must be removed, please call the District’s Telecommunications Manager”.

2.14 EQUIPMENT RACKS

A. When shown on drawings, communication closets shall be equipped with floor mounted equipment racks provided by the SCS Contractor to house shelves, patch panels, power strips, LAN electronics, UPS, etc. The racks shall be made of aluminum and include mounting hardware for mounting specified termination equipment to the frame.

B. Dimensions shall be 7’ H x 19” W x 29” D.

C. Contractor shall provide vertical wire managers for patch and equipment cords.

D. Equipment racks and rack mount accessories shall be Black in color, unless otherwise noted.

E. Floor mounted open racks shall be secured from the base to the structural floor to prevent movement, and secured to ladder tray sections installed above. Contractor shall provide and install a minimum of four (4) fasteners/anchors per floor mounted rack. Fasteners installed to the structural floor shall be torqued to the “fastener manufacturer’s” recommendation.

F. Racks mounted on raised floors shall be seismically braced to the structural floor below the raised floor to the satisfaction of DSA, and all local, state and federal requirements.

G. Floor mounted open racks shall be secured to the overhead ladder tray/ladder runway.

H. All racks shall be individually grounded to the dedicated telecommunications ground busbar (TMGB, TGB) within the equipment room using a 2-hole compression ground lugs and #6 AWG stranded green jacketed conductor. This ground conductor shall be run as straight as possible, with the length kept as short as possible. Ground wire shall be neatly secured to the rack and ladder runway. Daisy chaining a ground conductor between racks or to other components is not allowed.

I. Product Specification: Chatsworth QuadraRack, 4-post frame, #50120-703.

2.15 EQUIPMENT CABINETS

A. When shown on drawings, cabinets shall be provided by the SCS Contractor to house shelves, patch panels, power strips, LAN electronics, UPS, etc. The cabinets shall be made of lightweight aluminum, UL Listed, and include mounting hardware for mounting specified termination equipment to the frame

B. Dimensions shall be 36 in. H x 26 in. W x 12 in. D, 6U, black for each cabinet. Top cabinet will house the patch panels and network equipments. Bottom cabinet will house the UPS.

C. Equipment cabinets and accessories shall be Black in color unless otherwise noted.

D. Wall mounted cabinets shall be secured to plywood backboard at locations indicated on the plan drawings. Contractor shall provide and install fasteners and anchors that are designed and rated for the determined mounting surface and building construction type. Contractor shall provide and install fasteners and anchors that are designed and rated for the combined weight of the equipment support cabinet and its contents. Contractor shall be responsible for determining correct cabinet mounting and anchoring methods that will safely support the combined weight of the cabinet and its contents. Contractor shall install cabinet in such a manner that a minimum of four (4) fasteners and/or anchors are attached directly into wall framing studs, or if applicable, masonry or concrete wall. Anchoring methods shall comply with DSA requirements and all local, state and federal safety codes.

E. Cabinets shall be configured per the District's Project Manager's direction.

F. All floor and wall mounted cabinets shall be individually bonded to the isolated ground busbar (TMGB, TGB) within the equipment room using a 2-hole compression ground lug and #6 jacketed green cable. Wall mounted cabinets require a horizontal rack bus bar (Chatsworth #10610-XXX, equal by Harger) installed at the top position of the front rails. Attach ground lug to this horizontal busbar. Ground wire shall be run as straight as possible, with the length kept as short as possible. Ground wire shall be neatly bundled and secured to the cabinet and ladder tray. Daisy chaining of ground wire between cabinets or to other components is prohibited. The use of screw-type mechanical ground lugs or connections are prohibited.

G. Cabinets mounted on raised floors shall be seismically braced to the structural floor below the raised floor to the satisfaction of DSA and all local, state and federal requirements.

H. Cabinets shall come equipped with a locking front door.

I. Product Specification: Chatsworth ThinLine II Wall-mount Cabinet #13050-72

2.16 OUTDOOR ACTIVE EQUIPMENT ENCLOSURES

A. When shown on drawings, Contractor shall provide and install outdoor enclosure(s) in quantity and locations as shown on the plan drawings. Enclosure shall house active and passive equipment as noted on the plan drawings.

B. The enclosure shall have two (2) 19” rails at the front and rear, TS system chassis, with a standard texture solid front door with 130-degree hinge on the right side. Door shall include comfort handle with push button lock.

C. The enclosure shall come equipped with internally fastened side panels, and with a NEMA type 4X AC unit mounted and centered in both directions on the rear door.

D. A NEMA 4 solid base, and include an 8” plinth shall be included.

E. The enclosure shall include a horizontal rack bus bar (Chatsworth #10610-XXX, equal by Harger) and be bonded to ground, per the plan drawings.

F. Enclosure dimensions shall be 31.5”W (800mm) x 70.8”H (1800mm) x 23.6”D (600mm).

G. Product Specification: Rittal

2.17 BACKBOARDS

A. Where indicated on plan drawings, provide new plywood terminal backboards. Use Douglas Fir plywood, A/C grade, finished A-side facing out, with prime coat painted on all surfaces (front, back and sides), and a finish coat of fire retardant white enamel paint. On each plywood sheet leave one (1) Fire Marshal Stamp unpainted for inspection. Unless otherwise indicated, use 8’-0” high x 3/4" thick plywood x length as shown on the plan drawings.

2.18 UNSPECIFIED EQUIPMENT AND MATERIAL

A. Any item of equipment or material not specifically addressed on the drawings or in this document and required to provide a complete and functional SCS installation shall be provided in a level of quality consistent with other specified items.

2.19 FIRE RATED PATHWAY

A. The firewall through-penetration shall be a manufactured, UL Classified, firestop device/ system designed to allow cables to penetrate fire-rated walls with a built-in fire sealing system that automatically adjusts to the amount of cables installed.

B. The firestopping device shall be capable of installation in new construction or retrofit in existing structures.

C. The device shall be UL Tested and Classified in accordance with ASTM E814 (UL 1479) and with ratings up to and including 2 hours.

D. Manufacturer: Specified Technologies Inc., EZ-Path (#EZDP33FW) or equal by Wiremold.

2.20 IP PAGING SPEAKERS/HORNS AND CLOCK/SPEAKERS

A. The Contractor shall furnish and install the IP based paging speakers, horns and clocks. All intercom/paging speakers, horns and clocks will be IP-Based for this project.

B. District has an existing software version of the Informacast control software and the Cisco Call Manager software. The Contractor shall be responsible for providing upgrades to the existing Informacast control software, if applicable. The Cisco Call Manager software changes shall be provided by the District.

C. Contractor shall furnish “Lifetime” IP-Speaker, Horn and Clock licenses from Informacast for this project for all devices installed. If the quantity of licenses is within 10% of the “package” or grouping of licenses, the Contractor shall provide the quantity of licenses equivalent to the next group number, as long as the cost is less than the cost for individual licenses.

D. Data Contractor shall be responsible for providing enclosures for all IP based speakers, horns and speakers. Contractor shall provide vandal resistant screws with all enclosures for attachment of the speaker/horn/clock baffle. Exterior locations shall be provided with stainless steel vandal resistant screws.

E. All enclosures shall be furnished and installed by the 27 10 00 Contractor in all areas shown in the floor plans.

F. Paging speakers/clocks shall be as manufactured by Advanced Network Devices, these speakers/clocks and enclosures will be procured by the 27 10 00 contractor.

G. Provide speakers/clocks and enclosures for the IP Speakers for the following types of locations as shown on the drawings:

1. Ceiling IP Speakers

    a. Ceiling mounted speakers shall be an Advanced Network Devices IPSCM-RMe. The speaker shall be a 10.5” round baffle constructed of 16-gauge steel, with a semi-gloss white baked epoxy finish. The IPSCM-RMe shall utilize one CAT6 cable to one speaker.

    b. The speaker shall be an 8" (20.32 cm) permanent magnet dual-cone type having a ceramic magnet. It shall have a frequency range of at least 60 Hz to 17,000 Hz, a 10-watt RMS program power-handling capability, and an axial sensitivity of at least 95 dB at 1 meter with a 1-watt input. The voice coil shall have 8-ohm impedance.

    c. The speaker shall accept power from any IEEE802.3af (PoE) or IEEE802.3 at (PoE+) compliant network switch or injector.

    d. Contractor shall include appropriate speaker mounts and enclosures as required.

2. Combination IP Speaker and Display

    a. The Speaker and baffle assembly shall be an Advanced Network Devices IPSWD, furnished and installed as indicated on the plans.

    b. The speaker shall be an 8" (20.32 cm) permanent magnet dual-cone type having a ceramic magnet. It shall have a frequency range of at least 60 Hz to 17,000 Hz, a 10-watt RMS program power-handling capability, and an axial sensitivity of at least 95 dB at I meter with a 1-watt input. The voice coil shall have 8-ohm impedance.

c. The speaker shall accept power from any IEEE802.3af (PoE) or IEEE802.3 at (PoE+) compliant network switch or injector.

d. The IPSWD shall include a 56 x 16 multi-color LED display capable of displaying the current time and any messages sent from the server.

e. The baffle shall be constructed of 18-gauge (IPSWD) or 22-gauge (IPSWS) cold rolled steel, and have a semi-gloss white baked epoxy finish.

3. Wall mount IP Loudspeakers

a. Wall mounted speakers shall be an Advanced Network Devices IPSWS-SM. The baffle and enclosure shall be constructed of 16-gauge galvanized steel, with a semi-gloss white baked epoxy finish. The enclosure shall have a dimension of 11.75” square and 4” deep.

b. The speaker shall be an 8" (20.32 cm) permanent magnet dual-cone type having a ceramic magnet. It shall have a frequency range of at least 60 Hz to 17,000 Hz, a 10-watt RMS program power-handling capability, and an axial sensitivity of at least 95 dB at 1 meter with a 1-watt input. The voice coil shall have 8-ohm impedance.

c. The speaker shall accept power from any IEEE802.3af (PoE) or IEEE802.3at (PoE+) compliant network switch or injector.

d. Contractor shall include appropriate speaker mounts and enclosures as required

4. Outdoor IP Speakers

a. Outdoor paging speakers shall be an Advanced Network Devices IPSWS-SMO weather-resistant paging speaker. The baffle and enclosure shall be constructed of 16-gauge galvanized steel, with a semi-gloss white baked epoxy finish. The enclosure shall have a dimension of 11.75” square and 4” deep.

b. The paging speaker shall be a double re-entrant horn, compression type loudspeaker. It shall have a frequency range of at least 600 Hz to 14,000 Hz, at least 10W RMS program power-handling capability, and an axial sensitivity of at least 104 dB at 1 meter with a 1-watt input, and 8-ohm impedance.

c. The speaker shall accept power from any IEEE802.3af (PoE) or IEEE802.3at (PoE+) compliant network switch or injector.

5. Enclosures – Surface Mount

a. Where speakers are to be surface mounted, enclosures shall be Advanced Network Devices IPS-SM1 (for IPSWD), or Advanced Network Devices IPS-FM1 (for IPSWS), or as approved. The enclosure shall be constructed of 22-gauge (IPS-SM1) or 16-gauge (IPS-FM1) galvanized steel, and have a semi-gloss white baked epoxy finish. The IPS-FM1 enclosure shall have a dimension of 11.75” square and 4” deep. The IPS-SM1 enclosure shall be 13.25 x 14.5” and 4.75” deep.

b. Contractor will need to coordinate with other divisions for locating speakers to avoid conflicts and for optimal sound coverage.

6. Provide a (3) foot long, CAT-6, UTP patch cord, gray in color, for the speaker location to connect to the ethernet drop located in the enclosure. Provide patch cords for 100% of IP Speaker/horn/clock locations. Provide (10) spare patch cords, deliver all Patch cords to the District IT Department.

7. IP speakers/horns/clocks shall be connected to the powered ethernet switch in the MDF / IDF Room or cabinet. Provide 3-foot long, Category-6 UTP patch cords, gray in color. Provide patch cords for 100% of IP Speaker/horn/clock/zone controller locations. Provide (20) spare patch cords, deliver all Patch cords to the District IT Department.

8. All speaker connections to be terminated at the data patch panel. Speakers must be patched to a POE powered switch in the MDF/IDF to allow for proper operation.

9. Contractor for 27 10 00 section is responsible for providing licensing requirements and Informacast software to drive speakers/clocks and program tones, bell schedules and announcement controls.

10. Programming of speakers for page coverage zones, tones, time schedules, pass class bell and VoIP interface to be completed by 27 10 00 contractor and is also responsible for providing IP addressing and identification of individual speakers.

PART 3 - EXECUTION

3.1 GENERAL INSTALLATION REQUIREMENTS

A. The wiring of the system shall be executed in accordance with the drawings and the equipment manufacturer's wiring diagrams. Should any variations in these requirements occur, the Contractor shall notify the District's Project Manager before making any changes. It shall be the responsibility of the manufacturer-authorized distributor of the approved equipment to install the equipment and guarantee the system to operate as per plans and specifications.

B. Furnish all conductors, equipment plugs, terminal strips, etc., and labor to install a complete and operable system.

C. The cables within the rack or cabinets shall be numbered for identification using machine generated labels wrapped around the cable jacket within six (6) inches of termination point. Refer to Labeling Requirements section of this document for additional requirements. Permanent hand written labels are prohibited.

D. Splices of cables are not acceptable.

E. The labor employed by the Contractor shall be regularly employed in the installation and repair of communication systems and shall be acceptable to the District's Project Manager to engage in the installation and service of this system.

F. The system must meet all local and other prevailing codes.

G. All cabling installations shall be performed by qualified and manufacturer-trained technicians.

H. Cable lubricants (i.e. Polywater) shall be used to reduce the cable pull tension stated by the cable manufacturer during cable installation in conduits and innerduct. Contractor shall verify the acceptability of the lubricant to be used with the cable manufacturer, prior to using such a lubricant. Lubricants that harden after installation are not allowed. Submit all proposed lubricants for approval PRIOR to use on low voltage, A/V, coax, fiber, and data cable installation. Cable lubricants shall be allowed to dry a minimum of fifteen (15) days before performing certification tests.

I. Cables may be run exposed above accessible ceilings, provided the cabling is supported independent of other utilities such as conduits, pipes, and the ceiling support systems. The Contractor shall include all costs in base bid for any additional supports/seismic bracing required by the Local Authority having Jurisdiction. The cables shall not be laid directly on the ceiling panels.

J. The cable jacket composition must meet local and all other prevailing fire and safety codes.

K. All firewalls penetrated by structured cabling shall be sealed by use of a non-permanent fire blanket or other method in compliance with the current edition of NFPA and the CEC or other prevailing code and must be a system listed by UL. The Contractor must not use concrete or other non-removable substance for fire stopping on cable trays, wireways or conduits. Contractors who use this method will be required to replace all cables affected and provide the original specified access to each affected area. This requirement also applies to maintaining fire ratings of all floors penetrated by conduits or devices designated for use by voice and data cabling.

L. All equipment racks and cabinets shall be bolted to the structural floor by the SCS Contractor in the location shown on drawings. Wall mounted relay rack and wall mounted cabinet kits shall be fastened to structural studs, not drywall or backboard only.

M. Any cable damaged or exceeding recommended installation parameters during installation shall be replaced by the Contractor before final acceptance at no cost to the District.

N. The cable manufacturer’s minimum bend radius and maximum pulling tension shall not be exceeded.

O. Cable raceways, when required, shall not be filled greater than the CEC maximum fill for the particular raceway type. Innerduct fill shall not exceed 40-percent.

P. Roof penetrations are prohibited. No conduit shall be installed on roofs or route horizontally on exterior walls.

3.2 SPECIFIC SYSTEM INSTALLATION REQUIREMENTS

A. All communications cabling used throughout this project shall comply with the requirements as outlined in the CEC Articles 725, 760, 770, and 800 (or related CEC Articles), and the appropriate local codes. All copper cabling shall bear UL listed type CMP (Plenum Rated) and/or CM/G (General Purpose) and/or CMR (Riser Rated). All fiber optic cabling shall bear OFNP (Plenum Rated) and/or OFNR (Riser Rated) and/or OFN/G (General Purpose). The SCS Contractor is responsible for installing appropriately

rated cable for the environment in which it is installed.

B. Cable Pathways:

1. In suspended ceiling and accessible ceiling areas where duct, cable trays or conduit are not available, the Contractor shall bundle cable, in bundles of 48 or less. Cable bundles shall be supported via "J" hooks attached to the existing building structure and framework at a maximum of five (5) foot intervals. In areas where two or more bundles are traveling in close proximity, utilize a Chatsworth Rapidtrak Cable support system. The Contractor shall adhere to the manufacturers' requirements for bending radius and pulling tension of all cables.

2. Cables or J-hooks shall not be attached to lift out ceiling grid supports or laid directly on the ceiling grid.

3. Cables or J-hooks shall not be attached to or supported by fire sprinkler heads, HVAC ducts, or delivery systems or any environmental sensor located in the ceiling air space.

4. J-hook pathways and cable bundles shall be installed as high up in the accessible ceiling space as possible so as not to interfere with other building systems.

5. Where additional conduit(s)/sleeve(s) are required, but not provided by the electrical Contractor, the SCS cabling Contractor shall be responsible to provide such conduit(s)/sleeve(s). Conduit(s) and sleeve(s) shall be of suitable material, sized, installed, fire-stopped, and grounded as required by the CEC, TIA standards and all other applicable codes and standards. Any conduit(s) and sleeve(s) added by the SCS Contractor shall be approved by the District's Project Manager prior to rough-in.

6. All J-hooks shall be rated and designed for Category 6 and 6A cabling.

C. Sealing of openings between floors, into or through rated fire and smoke walls, existing or created by the Contractor for placement of new or removal of old cable into or through shall be the responsibility of the Contractor. Sealing material (Approved UL listed system) and application of this material shall be accomplished in such a manner that is acceptable to the local fire and building authorities having jurisdiction over this work. Creation of such openings as are necessary for cable passage between locations as shown on the drawings shall be the responsibility of the Contractor's work. Any openings created by or for the Contractor and left unused shall also be sealed as part of this work.

1. Fire stopping work shall be performed by a single Contractor to maintain consistency and accountability on the project.

2. The Contractor shall install penetration firestop seal materials in accordance with design requirements, and manufacturer's instructions.

3. The Contractor's installer shall be certified, licensed or otherwise qualified by the firestopping manufacturer as having been provided the necessary training to install manufacturer's products per specified requirements.

4. All installed through penetration firestops shall be identified via label, or stencil. Label shall state that the fill material around the penetrating item is a firestop, and that it shall not be disturbed unless by an authorized Contractor. The label

shall include the firestop brand name, and the classified system number for which it was installed.

a. Sample Label: MANUFACTURER'S NAME:

ATTENTION
Fire Rated Assembly For
Any Changes To This System, Please Refer To UL System Listed Below
PRODUCT:
HOUR RATING: UL SYSTEM:
INSTALLATION DATE:
INSTALLED BY: (Contractor's Company name) CONTRACTOR LICENSE NUMBER: BUSINESS PHONE:
EMAIL ADDRESS:

D. The Contractor shall be responsible for damage to any surfaces or work disrupted as a result of his work. Repair of surfaces, including painting, shall be included as necessary.

E. Cable bundles within the MDF/IDF shall be dressed into bundles of no more than twenty-four (24) cables. Maintain each bundle with half-inch-wide hook and loop strips spaced every twelve (12) inches maximum.

F. The Contractor shall provide and install all patch cords per direction of the District's project manager in a neat and systematic fashion. Prior to installing all patch cords, the Contractor shall install patch cords in a single rack to demonstrate work practices to the District's project manager. Only after any corrections/modification to the installation as directed by the District's project manager, may the Contractor continue installing the patch cords in the remaining racks.

G. Each equipment cabinet and rack requires its own dedicated grounding connection to the grounding infrastructure. Grounding infrastructure shall consist of a dedicated #6 AWG (min.) green conductor from every rack/cabinet back to the TMGB/TGB. All ground conductor attachments to the TMGB/TGB shall utilize 2-hole compression lugs. See Section 2.13 Grounding System and Conductors of this document for more information.

H. In raised-floor environments, the ground conductor shall attach to the lowest holes on the front rail of each rack/cabinet.

I. Rack/cabinet mounted equipment shall be grounded via the chassis, in accordance with manufacturer's instructions. The equipment chassis shall be bonded to the rack/cabinet using one of the following methods:

1. If the equipment has a separate grounding hole or stud, use a #10-AWG ground wire from the chassis ground hole/stud to the rack grounding bus.

2. If the manufacturer suggests grounding via the chassis mounting flanges, use tri-lobular thread-forming screws (not self-tapping or sheet metal screws) to attach the equipment to the rack/cabinet rails. If the equipment mounting flanges are painted, remove the paint and apply an anti-oxidant, or use tri-lobular thread-forming screws and two (2) "Type B" internal-external tooth lock washers to safely ground equipment to the rack.

J. Bonding of ladder tray sections- Attach bonding straps to each ladder tray section by utilizing either two (2) tri-lobular thread-forming screws (not self-tapping or sheet metal screws) or by using two (2) standard bolts with two (2) "Type B" internal-external tooth

lock washers per bolt. If thread-forming screws are not used, remove paint at each connection point and use an approved anti-oxidant prior to attaching the bonding strap.

K. Bonding and Grounding: All cable sheaths and splice cases shall be grounded to a Telecommunications Ground Bus. All grounding must be in accordance with the CEC, NFPA, TIA-607-B and all local codes and practices. The Electrical Contractor shall be responsible for providing a properly sized grounding conductor from the main electrical ground to the telecommunications ground bus in each MDF/IDF room. The SCS Contractor shall be responsible to provide the telecommunications busbar, attach the Electrical Contractor-provided ground conductor, and bond all required equipment and components within each MDF/IDF to the busbar.

L. Power Separation: The Contractor shall not place any distribution cabling alongside power lines, or share the same conduit, channel or sleeve with electrical apparatus. Maintain a minimum of 12 inch separation from light fixtures.

M. Miscellaneous Equipment: The Contractor shall provide any necessary screws, anchors, clamps, hook & loop ties, distribution rings, wire molding (MDF & IDF locations), miscellaneous grounding and support hardware, etc., necessary to facilitate the installation of the System.

N. Special Equipment and Tools: It shall be the responsibility of the Contractor to furnish any special installation equipment or tools necessary to properly complete the System. This may include, but is not limited to, tools for terminating cables, testing and splicing equipment for copper/fiber cables, communication devices, jack stands for cable reels, or cable winches.

O. Labeling: The Contractor shall be responsible for printed labels for all pull boxes, conduits, cables, protectors, racks, cabinets, patch panels, connector panels, cords, distribution frames, and outlet locations, according to the specifications. Hand written labels are prohibited. See LABELING REQUIREMENTS Section 3.9 of this document for more information.

P. Cable Storage: The Contractor shall not roll or store cable reels without an appropriate underlay and the prior written approval of District's Project Manager.

Q. Cable Records: The Contractor shall maintain conductor polarity (tip and ring) identification at the main equipment room (switch room), risers, and station connecting blocks in accordance with industry practices, but only in locations authorized by the District's Project Manager. Contractor to provide spread sheet for all outdoor backbone and indoor riser backbone cables tested.

R. All installation shall be done in conformance with TIA-568-C standards, BICSI TDMM guidelines and manufacturer's installation guidelines. The Contractor shall ensure that the maximum pulling tensions of the specified distribution cables are not exceeded and cable bends maintain the proper radius during the placement of the facilities. Failure to follow the appropriate guidelines will require the Contractor to provide, in a timely fashion, any additional material and labor necessary to properly rectify the situation to the satisfaction and written approval of the District's Project Manager. This shall also apply to any and all damages sustained to the cables by the Contractor during the implementation.

3.3 STRUCTURED CABLING GENERAL INSTALLATION DESCRIPTION

A. The structured cabling system shall consist of any or all of the following subsystems:

1. Work Area Subsystem

2. Horizontal Subsystem

3. Administration Subsystem

4. Backbone Subsystem

5. Equipment Subsystem

B. Work Area Subsystem: The Work Area Subsystem provides the connection between the telecommunications outlet (TO) and the station equipment in the work area. It consists of cords, adapters, and other transmission electronics.

1. Contractor shall supply the wiring or cords that connect terminal devices to telecommunications outlets. This includes mounting cords and connectors, as well as extension cords.

C. Horizontal Subsystem: The Horizontal Subsystem provides connections from the horizontal cross connect to the telecommunications outlets in the work areas. It consists of the horizontal transmission media, the associated connecting hardware terminating this media and outlets in the work area. Each floor of a building is served by its own Horizontal Subsystem(s).

1. Horizontal Cabling

a. Contractor shall supply horizontal cables to connect each telecommunications outlet to the backbone subsystem as shown on the drawings.

b. Unless otherwise noted on the floor plans or within this document, the type of horizontal cables used for each work location shall be 4-pair unshielded twisted pair (UTP).

c. The 4pair UTP cables shall be run using a star topology format from the administration subsystem to every individual telecommunications outlet. All cable routes, other than those dictated on the drawings, are to be approved by District's Project Manager prior to installation.

d. The length of each individual run of horizontal cable from the administration subsystem to the telecommunications outlet shall not exceed 295-ft (90 m).

e. Contractor shall observe the bending radius and pulling strength requirements of the 4pair UTP cable during handling and installation.

f. Each run of cable between the termination block and the telecommunications outlet shall be continuous without any joints or splices.

g. All station cable shall be placed in the interior of walls unless otherwise noted in the bid documents/plan drawings.

h. In the event Contractor is required to remove ceiling tiles, such Work shall not break or disturb the ceiling grid. Removal of the ceiling grid must be coordinated with the District's Project Manager. All insulation shall be replaced in its original location. Contractor shall be responsible to replace any ceiling tiles that they damage during the course of their work, at no additional cost to the District.

i. Avoid electromagnetic interference (EMI) by maintaining adequate physical separation between telecommunications cabling and possible sources such as, but not limited to, electric motors, electric erasers, electric pencil sharpeners, transformers, fluorescent lighting that share distribution space with telecommunications cabling, copiers that share work area space with line cords and terminals, large fax machines and power cords that supports such equipment. Minimum separation shall be six (6) inches.

j. Contractor shall provide District's Project Manager with detailed cable run diagrams for cable runs within raised floors (if shown on plans) detailing exact locations of cable for review and written approval by District's Project Manager.

k. Conduit runs installed above grade by the Contractor should not exceed one hundred (100) feet or contain more than two (2) 90-degree bends without utilizing appropriately sized pull box. Pull boxes are not to be used in lieu of a bend.

l. Station cables and riser cables installed within ceiling spaces shall be routed through these spaces at right angles to electrical power circuits.

m. Each station cable shall have 1 meter of service slack configured in an "S" shape via J-hooks at rack or wall field end and one (1) foot of service loop at station outlet end. Service slack shall be located within fifteen (15) feet of the MDF/IDF as required to maintain a neat and "workmanship like" installation.

D. Administration Subsystem: The Administration Subsystem links all of the subsystems together. It consists of labeling hardware for providing circuit identification and patch cords or jumper wire used for creating circuit connections at the cross connects. All wallfield layouts must be approved by District's Project Manager prior to rough-in and installation.

1. Separate termination fields shall be created for voice/data, wireless access points, paging, surveillance cameras, clocks, and building energy management system applications.

2. Termination blocks that require rotation after connection of horizontal/vertical wiring will not be allowed.

3. Contractor shall supply cross-connect wire, patch cords and fiber patch cords for crossconnection and interconnection of termination blocks and lightguide interconnection units.

E. Backbone Subsystem:

1. The main cable route between two or more buildings is called the Backbone

Subsystem. It links the main distribution frame (MDF) in the equipment room to each intermediate distribution frame (IDF). It consists of the backbone transmission media between these locations and the associated connecting hardware terminating this media. It is normally installed in a star topology, with first-level backbone cables beginning at the main cross connect. If needed, second-level backbone cables begin at intermediate cross connects.

2. The backbone subsystem shall include vertical runs (riser) of inbuilding cable between floors of a multi-story building, if applicable.

3. All backbone fiber optic cable(s) will be run in innerduct and terminated in the MDF/IDF Rooms, or as otherwise indicated on the plan drawings, with connectors, type as specified elsewhere, in rack mounted or wall mounted fiber patch panels equipped with sufficient panels, couplers and jumper storage shelves to terminate and secure all fibers. All innerduct (Carlon or equal) shall be corrugated and a minimum of 3/4" in diameter unless otherwise indicated on plans. Innerduct shall be plenum, riser or general rated as required by the environment in which it is to be installed. Innerduct capacity shall not exceed 40 percent fill.

4. All backbone multipair copper cable(s) will be terminated in the MDF/MPOE/IDF rooms, or as otherwise indicated on the plan drawings. Backbone multipair cable shall be terminated on building entrance fused protectors as specified elsewhere in this document. The minimum pair count for multipair copper cable between buildings shall be 25-pairs. Refer to bid documents/plan drawings for any additional required pairs.

5. In multi-story buildings, Contractor shall supply multipair copper cables and optical cables as the riser cables between floors. Reference this document and plan drawings for quantities. Contractor shall observe the bending radius and pulling strength requirements of all backbone cables during handling and installation.

F. Equipment Room Subsystem: The Equipment Subsystem consists of shared (common) electronic communications equipment in the equipment room or telecommunications closet and the transmission media required to terminate this equipment on distribution hardware.

3.4 DAMAGES

A. The Contractor will be held responsible for any and all damages to portions of the building caused by it, its employees or sub-Contractors; including but not limited to:

1. Damage to any portion of the building caused by the movement of tools, materials or equipment.

2. Damage to any component of the construction of spaces.

3. Damage to the electrical distribution system.

4. Damage to the electrical, mechanical and/or life safety or other systems caused by inappropriate operation or connections made by the Contractor or other actions of Contractor.

5. Damage to the materials, tools and/or equipment of the District, its consultants, agents and tenants.

3.5 PENETRATIONS OF WALLS FLOORS AND CEILINGS

A. Unless specifically shown on the drawings, the Contractor shall make no penetration of floors, walls or ceiling without the prior written approval of the District's Project Manager.

B. Any penetrations through acoustical walls or other walls for cable pathways/cables shall be sealed by the Contractor in compliance with applicable code requirements and as directed by District's Project Manager.

C. Any penetrations through fire-rated walls for cable pathways/cables shall be sealed by the Contractor as required by code and as directed by District 's Project Manager. The Contractor shall be required to work together with the General Contractor and the Electrical Contractor to coordinate and develop all fire stopping methods prior to any cable installation. The Contractor shall also, prior to the commencement of on-site activities, submit to District's Project Manager, details of any special systems to be used.

D. Roof penetrations are prohibited. No conduit shall be installed on roofs or route horizontally on exterior walls.

3.6 TESTING/WARRANTY

A. Structured Cabling System

1. The Contractor shall provide competent, test equipment manufacturer-trained engineers and/or technicians, authorized by the manufacturer of the cabling system, to technically supervise and participate during all tests for the systems.

2. The Contractor shall test and certify the cabling system to minimum standards as set forth in the TIA-568-C specifications for 100BaseTX Ethernet and for Category 6 cable, token ring, and 1000baseT signals.

3. All cables and termination hardware shall be 100% tested for defects in installation and to verify cable performance under installed conditions. All conductors of each installed cable shall be verified usable by the Contractor before system acceptance. Any defect in the cable system installation including but not limited to cable, connectors, feed-through couplers, patch panels, splices, and connector blocks shall be repaired or replaced in order to ensure 100% useable conductors in all cables installed.

4. Each cable shall be tested for continuity on all pairs and/or conductors. Twisted-pair voice cables shall be tested for length, continuity, pair reversals, opens, shorts, transpositions, presence of AC and DC voltages and opens. Twisted-pair horizontal cables shall be tested for the all of the above requirements, plus tests that indicate installed cable performance. Category-6 and catgegory-6A cables shall be tested using a TIA-568-C.2-1 Category 6A Level III/IEC 61935 Level III or better, ETL certified cable tester/analyzer.

5. Shielded/screened cables shall be tested with a device that verifies shield continuity in addition to the above stated tests.

6. The test shall be recorded as pass/fail as indicated by the test set in accordance with the manufacturers recommended procedures, and referenced to the appropriate cable identification number and circuit or pair number. Any faults in the wiring shall be corrected and the cable re-tested before final acceptance.

7. Each installed cable shall be tested for installed length using a Time Domain Reflectometer (TDR) type device. The cables shall be tested from patch panel to patch panel, block to block, patch panel to outlet or block to outlet as appropriate. The cable length shall conform to the maximum distances set forth in the TIA-568-C Standard. Cable lengths shall be recorded, referencing the cable identification number and circuit or pair number.

8. Multi-pair cables, record the following tests on every cable pair in each multipair cable using a TDR type device: record the shortest pair length, continuity, pair reversals, shorts, opens, transpositions, presence of AC and DC voltage.

9. Enhanced Category 6 and 6A data cable shall be performance verified using an automated test set. This test set shall be capable of testing for the continuity and length parameters defined above, and provide results for the following tests:

    a. Attenuation (Insertion Loss).

    b. Return Loss (RL).

    c. Near End Crosstalk (NEXT) – measured at both ends of each cable pair.

    d. Attenuation to Crosstalk Ratio (ACR).

    e. Power Sum Near End Crosstalk (PSNEXT).

    f. Power Sum Attenuation to Crosstalk Ratio (PSACR).

    g. Far End Crosstalk (FEXT).

    h. Equal Level Far End Crosstalk (ELFEXT).

    i. Power Sum Equal Level Far End Crosstalk (PSELFEXT).

10. Test results shall be automatically evaluated by the equipment, using the most up-to-date criteria from the ANSI/TIA/EIA Standard, and the result shown as pass/fail. Test results shall be printed directly from the test unit or from a download file using an application from the test equipment manufacturer. The printed test results shall include all tests performed, the expected test result, and the actual test result achieved.

11. Optical Fiber Cable Testing: All fiber testing shall be performed on all fibers in the completed end to end system by test equipment manufacturer-trained engineers and/or technicians. There shall be no splices unless clearly defined in Section 3 of this specification or on the plan drawings. Testing shall consist of a bi-directional end to end OTDR trace performed per ANSI/TIA/EIA 455-61 & ANSI/TIA/EIA 526 and a bi-directional end to end power meter test performed per ANSI/TIA/EIA 455-53A. The system loss measurements shall be provided at 850 and 1300 nanometers for multimode fibers and 1310 and 1550 for single mode fibers.

a. Pre-installation cable testing: The Contractor shall test all fiber optic cable prior to the installation of the cable. The Contractor shall assume all liability for the replacement of the cable should it be found defective during the warranty period.

b. Loss Budget: Fiber links shall have a maximum loss of: (allowable cable loss per km) x (km of fiber in link) + (.4dB) x (number of connectors) = maximum allowable loss.

c. Any link not meeting the requirements of the standard shall be brought into compliance by the Contractor, at no additional charge to District.

12. The Contractor shall provide test documentation to the District's Project manager in a three ring binder(s) and in CD format within three weeks after the completion of a specific project. The binder(s) shall be clearly marked on the outside front cover and spine with the words "Test Results", the project name, and the date of completion (month and year). The binder shall be divided by test type. A paper copy of the test results shall be provided that lists all the links that have been tested, and include link name, overall pass/fall evaluation, date and time of test, cable type and NVP value. Detailed test results shall be provided for each link tested and shall include length, propagation delay, delay skew, insertion loss, return loss, NEXT, ELFEXT, ACR, PSNEXT, PSELFEXT, and PSACR. Detailed test results for each link will also include customer site name, name of standard selected to execute the tests, date and time test results were saved in memory of test unit, brand name model and serial number of tester and revision of the tester software and test standards database in the tester. Individual test data within each section shall be presented in the sequence listed in the test summary records. Unless a more frequent calibration cycle is specified by the manufacturer, an annual calibration cycle is anticipated on all test equipment used for this installation.

13. When repairs and re-tests are performed, the problem found and corrective action taken shall be noted, and both the failed and passed test data shall be collocated in the binder.

14. The entire SCS system shall be warranted free of mechanical or electrical defects by the Contractor for a period of one year after final acceptance of the installation.

15. Any equipment that is not installed per the manufacturer's recommendation shall be replaced promptly and at no cost to the District.

16. Any material showing mechanical or electrical defects shall be replaced promptly at no expense to the District.

17. Provide all labor and material warranties for each system, as described elsewhere in this document.

18. At the District's direction, the Contractor shall perform additional random testing which shall consist of a random sample of up to 10% of each installation distribution system. The Contractor shall assume responsibility for providing the proper test equipment and staff to conduct tests. The District's representative shall witness the tests.

19. Should the initial 10% test not be 100% successful (all drops testing over Cat6 up

to 250MHz), the Contractor shall assume responsibility to repair/replace non-passing links, at the direction of the District, and the links to re-verify and resubmitted. A 20% random sample shall then be conducted to ensure proper performance of the system.

20. Should there be failure in this re-test, the Contractor shall be responsible to repeat the re-test procedure until such time as all cabling is verified.

3.7 COMPLETION OF WORK:

A. At the completion of the Systems, the Contractor shall restore to its former condition, all aspects of the project site and on a daily basis, shall remove all waste and excess materials, rubbish debris, tools and equipment resulting from or used in the services provided under this Contract. All clean up, restoration, and removal noted above will be by the Contractor and at no cost to District. If the Contractor fails in its duties under this paragraph, District may upon notice to the Contractor perform the necessary clean up and deduct the costs thereof from any amounts due or to become due to the Contractor. It shall be the Contractor's responsibility to remove trash from the areas it is working in and bring trash and debris to the Contractor provided dumpster.

3.8 INSPECTION

A. On-going inspections shall be performed during construction by the District's representative. All work shall be performed in a high quality manner and the overall appearance shall be clean, neat and orderly. Any work that does not meet the District's representative's approval shall be removed and reinstalled by the Contractor at no additional cost to the District.

3.9 LABELING REQUIREMENTS

A. Numbers must be assigned to each outlet location using a logical designation convention. Blueprints with the outlet placement and configuration information have been furnished to the Contractor. Contractor will provide the equipment as necessary to generate Panduit PAN-CODE (or Equal) laser printer generated self-laminating labels using the numbering convention shown below and as specified herein. Before any permanent labels are installed on blocks, face plates or cables, Contractor shall submit a sample label of each various type listed below to District's Project Manager for written approval to ensure compliance with the labeling scheme, legibility, etc. Contractor is responsible to provide the labeling scheme as described herein.

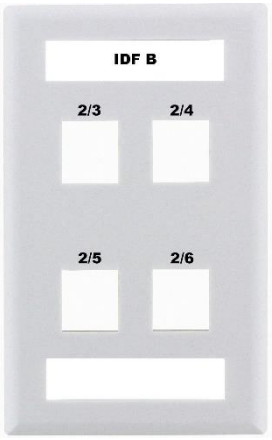

B. Station Faceplate (Telecommunications Outlet) Labeling. The following is illustrative of the number convention to be used:

1. Top Window: IDF-B. This identifies the IDF location where cable originates within the building (i.e., IDF room "B").

2. Bottom Window: blank. For future use.

3. Faceplate jacks shall be numbered sequentially from top to bottom, and left to right. Individual jack labels shall indicate Patch Panel number / port number. (i.e.,

2/3 represents patch panel #2, patch panel port #3).

C. Network Switch Labeling. All rack mounted Ethernet edge switches shall be sequentially numbered. Number shall be printed and attached to the left edge and centered. Numbers shall be minimum 1/2” high and printed white on a black background.

D. Patch Panel Labeling. All copper category 6 and 6A rack mounted patch panels shall be sequentially numbered, beginning with the uppermost panel in the rack. Patch panel number shall be printed and attached to both left and right edges and centered. Numbers shall be minimum 1/2” high and printed white on a black background. Patch panel ports shall be labeled with the corresponding room number where the cable’s faceplate is located. Cables shall be terminated sequentially by room number and faceplate order.

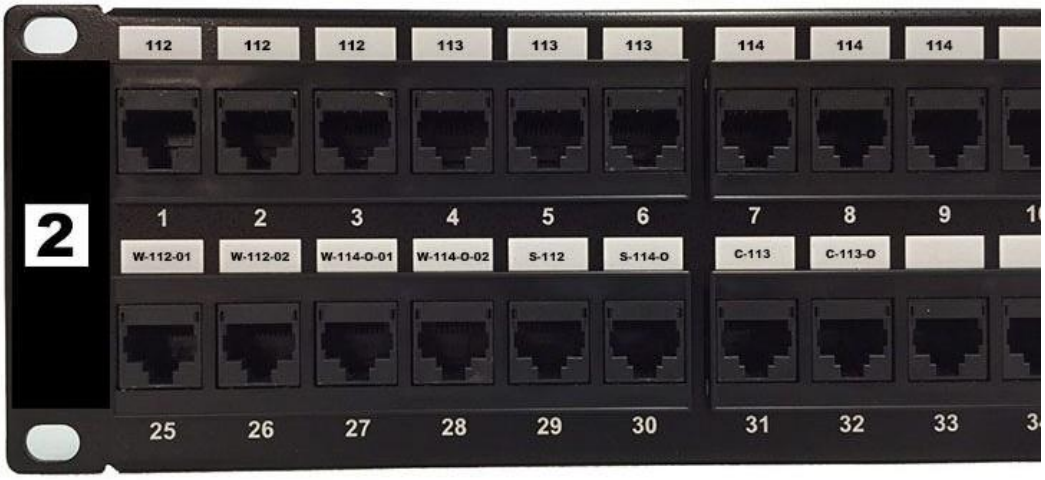

1. Access Points: All labeling will start with “W” with the corresponding or closest room number. Ex. “W-W112” If the access point is for outdoor, “-O” will be added after the room number. Ex. “W-114-O”. If there are multiple access points in the same location or room, sequential number starting with “-01” will be added at the end. Ex. “W-W112-01” or “W-W114-O-01”

2. IP Speaker/Clock: All labeling will start with “S” with the closest room number. Ex. “S-W112” If the IP Speaker/Clock is for outdoor, “-O” will be added after the room number. Ex. “S-114-O”. If there are multiple IP Speakers in the same location or room, sequential number starting with “-01” will be added at the end. Ex. “S-W112-01” or “S-W114-O-01”

3. IP Camera: All labeling will start with “C” with the closest room number. Ex. “C-W112” If the IP Camera is for outdoor, “-O” will be added after the room number. Ex. “C-114-O”. If there are multiple IP Cameras in the same location or room, sequential number starting with “-01” will be added at the end. Ex. “C-W112-01” or “C-W114-O-01”

E. Station Cable Jacket Labeling. All Category 6 and Category 6A cables shall be labeled within six inches of each termination end (e.g., at both ends, outlet end and MDF/IDF end) using machine-generated, “P-Touch” type, self-laminating cable markers.

1. Example: IDF B - 2/24

2. IDF location where cable originates (i.e., IDF room “B”).

3. Patch panel and port numbers where cable terminates (i.e., patch panel #2, port #24)

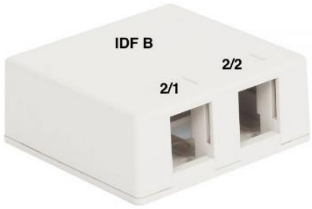

4. Access Point labeling will be on a two port network biscuit with top identifies the IDF location and individual jack labels shall indicate Patch Panel number / port number. (i.e., 2/1 represents patch panel #2, patch panel port #1).

5. IP Speaker/Clock labeling will be on bottom center on the face of the hardware.



6. IP Camera will be on a network biscuit with top identifies the IDF location and individual jack labels shall indicate Patch Panel number / port number. (i.e., / represents patch panel #4, patch panel port #9).

F. Backbone and Riser Multipair Cable Labeling. All backbone and riser cables (copper, fiber, coax, etc) will be labeled to reflect the origin and destination abbreviation for the cable and pair counts on large font (16 pitch) self-laminating labels, which shall be located within 18 inches of each end of the cable. Labels shall be placed on the cable to be visible without relocating surrounding cables.

1. Example #1: IDF2/IDF3/CP100/01

2. IDF2: Cable Origination

3. IDF3: Cable Destination

4. CP100: Cable Type & Pair or Strand Count (ex. 100 – pair Copper Cable. Other possibilities include CX for coax, HB for hybrid fiber cable, MM for multimode cable, and SM for singlemode cable.)

5. 01: Cable identification number (ex. cable 01). There may be more than one backbone or riser cable with the same origin, destination and pair count.

G. Multipair Cable Termination Block Labels. All multipair cables will be labeled using appropriate terminal-block label strip with label holders. Termination blocks shall be labeled in such a manner to indicate Termination Block number (ex: W1, W2, etc) and type of cables (ex. Fire Alarm-FA, Security Alarm-SE, Paging-PA, FAX machine, etc.).

1. Termination Block Label:

2. Example: W1 – Alarm Cables 1st Floor

3. W1: Wall Field 100-pair 110-block #1

4. Individual cable numbers on label strip:

5. Example: 001

6. Station #1

H. Multipair Cable Termination Block Labels. All multipair riser blocks shall be labeled using appropriate terminal-block label strip with label holders and shall follow the labeling scheme outlined above. Building interconnect cable termination block labels shall be per ANSI/TIA/EIA-606-B. Final label scheme shall be determined by the District's decision.

I. Fiber Enclosure Labels. All fiber enclosures and panels will be labeled using self-laminating laser label markers. Fiber labels shall include all information as specified by the District. Contractor is responsible to provide a labeling scheme that meets with the District's satisfaction. At a minimum, the fiber enclosure label card shall indicate: destination of connected cables, slash (/), origination of connected cables, slash (/), and the fiber enclosure number and port number.

1. Example: MDF/IDF2/1-1

2. MDF: Destination Patch Panel Location Designation

3. IDF2: Origination Patch Panel Location Designation

4. 1-1 Indicates fiber enclosure number and fiber port number on both origin and destination fiber enclosures.

J. Equipment Rack/Cabinet Labeling: All equipment racks/cabinets shall be labeled according to their room identifier and a two-digit number. The labels will be engraved plastic plates, with 1"-high white letters on black background. The labels will be attached to the cross member at the top front of each frame or rack with appropriately sized sheet metal screws. Self-adhesive strips, glues, etc. are unacceptable. Racks and cabinets within the same room shall be numbered sequentially from left to right, when facing the front of the racks/cabinets

1. Example: MDF-01

2. MDF Room Designation

3. 01 Rack Identifier

K. Innerduct and Fiber Cable Warning Labeling. The Contractor shall provide and install tags of stamped plastic for tube cable and innerduct. The labeling convention described above within Paragraph E shall apply. Additionally, the Contractor will also install fiber optic warning tags (Panduit #PST-FO) every 12 feet on all exposed fiber optic cable and on innerduct containing fiber optic cable installed within the building, also on innerduct and cable visible in each pull box, manhole, and vault.

L. MDF/IDF Floor Plan Mounting Frame: Provide wall mountable floor plan mounting frame with removable Plexiglas front cover in each MDF/BDF/IDF. Frame and cover shall be sized to house 30"x42" floor plan drawing. Coordinate location of frame with District's Project Manager prior to installation.

M. Telecommunications Main Grounding Busbars (TMGB, TGB): All telecom grounding busbars shall be labeled using large font (16 pitch) self-laminating labels. Labels shall indicate "TMGB" or "TGB". If more than 1 busbar is in the room, include a numerical indication (ex: TMGB-1).

3.10 MISCELLANEOUS PROJECT REQUIREMENTS

A. Site Cleaning: Throughout the progress of the plant construction, the Contractor shall keep the working area free from debris of all types and remove from the premises all rubbish resulting from any work done by Contractor. On a daily basis and at the completion of its work, the Contractor shall, to the extent possible, leave the premises in a clean and finished condition.

B. Conduits: All backbone cabling will run through dedicated conduits. All new conduits will be supplied with a pull string. Contractor shall supply pull string and pull rope for the installation of all cables in existing conduits. For all conduits left with available capacity, Contractor shall replace pull strings with ¼-inch pull rope during the course of his work. Contractor must seal all underground low voltage conduits within manholes, underground vaults/pull boxes, and underground conduits that enter a facility, with an approved mechanical water/gas/air tight plug. Unused conduits shall be sealed with a blank plug.

C. Seismic Requirements: Contractor will install all equipment racks, equipment cabinet enclosures, cable runways, etc. according to DSA and local, state and/or federal code. Contractor will notify District's Project Manager of such requirements and shall provide such bracing as required. Contractor to coordinate all installation with the structural Engineer of Record.

D. Safety Requirements: Contractor will utilize appropriate personnel and display warning signs, signals, flags and/or barricades at the work site to ensure adherence to safety regulations and as prudence requires.

E. Specification/Drawing Status: All specifications and drawings related to this project will be "frozen" after shop drawing approval. The District reserves the right to negotiate any future changes with the Contractor at any time.

3.11 MISCELLANEOUS SUPPORT REQUIREMENTS

A. Upon approval of shop drawings, Contractor shall immediately place orders for all required materials, components, and supplies. In addition, Contractor shall secure and forward written confirmations (including orders and shipping dates) direct from each manufacturer/vendor to the District's Project Manager.

B. Contractor shall expedite shipment of all materials, components and supplies, as necessary to ensure the successful completion of the Project by the date required. All costs for expediting shall be included within Contractor's pricing as provided below.

C. The system cost herein shall include administration/maintenance training for at least five (5) District representatives with a minimum allotment of two (2) eight-hour sessions. All training shall include written and/or video materials that shall remain the property of District. If materials are written, they shall be provided in quantities sufficient for each person trained; if materials are video, one (1) copy of each will be required. The administration/maintenance training shall include, but not be limited to, the following:

1. Review of as-built documentation, including a site demonstration.

2. All warranty information.

D. Minimum standards for maintenance purposes shall include optional access to service on a 24 hour-a-day, 365 day-a-year basis. In addition, Contractor shall, upon notification, respond as follows:

1. Emergency Response: Contractor must respond by utilizing remote diagnostics capabilities (as applicable) within thirty minutes of notification. If necessary, Contractor must dispatch at least one certified technician for arrival on-site within two hours of notification.

2. Non-Emergency Response: Contractor shall respond by utilizing remote diagnostics capabilities and or cause dispatch of at least one certified technician for arrival on-site within one business day of notification.

3. Definition of “Emergency”: For maintenance purposes, “emergency” shall be defined as one or more of the following conditions:

    a. Defects of any riser pairs and/or components involving at least ten percent (10%) of any riser cable’s capacity.

    b. Defects of station cable pairs and/or components involving at least ten percent (10%) of any department or group of voice and/or data stations.

    c. Defects significantly impairing any single attendant console.

    d. Defects of any fiber optic cable and/or components involving at least ten percent (10%) of any department or group’s fiber-based systems and/or stations.

    e. Any pre-defined failure as submitted by District and agreed to be Contractor.

3.12 FINAL ACCEPTANCE

A. The District or District's representative may visit the site during the installation of the system to ensure that correct installation practices are being followed.

B. The District or District's representative will conduct a final job review once the Contractor has finished the job. This review will take place within one (1) week after the Contractor notifies the District.

C. Two (2) copies of all certification data and drawings for all identifications shall be provided to the District before the District's review.

D. The District or District's representative will review the installation and certification data prior to the system acceptance.

E. The District or District's representative may test some of the systems features to ensure that the certification data is correct. If a substantial discrepancy is found, the District reserves the right to have an independent consultant perform a certification of the entire system. If such a procedure is undertaken, the cost of the testing will be billed back to the Contractor.

F. In the event that repairs or adjustments are necessary, the Contractor shall make these repairs at his own expense. All repairs shall be completed within ten (10) days from the time they are discovered.

G. The Contractor shall provide two (2) copies of an "operating and servicing manual" for the system within fourteen (14) calendar days of District’s final acceptance of the system.

The manuals shall be bound in flexible binders. All data shall be printed material or typewritten. Each manual shall include the following: instructions necessary for the proper operation and servicing of the system; complete as-built installation drawings of the system (11”x17”); equipment specification cut sheets, complete performance test data, complete warrantee information and replacement parts list with current prices listed, contact information for repair and warranty work requests.

1. The Contractor shall mount a full size 30” x 48” bond copy of each scaled Site Plan within MDF room and each IDF room with removable Plexiglas front cover. Frame and cover shall be sized to house the site plan and floor plan drawings. Coordinate location of frame with District’s Project Manager prior to installation.

2. The Contractor shall hand to the District a copy of any applicable installation specific software configurations including all log-in passwords in CD format.

END OF SECTION

SECTION 27 41 00 - AUDIOVISUAL SYSTEMS

PART 1 - GENERAL

1.1 SCOPE OF WORK

A. This specification shall apply to all phases of Work hereinafter specified, shown on Drawings, or as required to provide a complete installation of Audiovisual Systems for this Project. Work required under this specification, is not limited to just the Audiovisual Systems (AVS) - refer to Architectural, Electrical, Structural, Landscape, Structural Cabling and Mechanical/Plumbing Drawings, as well as all other drawings applicable to this project, which designate the scope of work to be accomplished. It is the intent of the Drawings and Specifications for the Contractor to finalize design, provide and install a complete, fully operational, and tested system

B. Work Included. Furnish labor, material, services and skilled supervision necessary for the construction, erection, installation, connections, testing, and adjustment of all AVS equipment specified herein, or shown or noted on Drawings, and its delivery to the Owner complete in all respects functional system ready for use.

1. Equipment and materials as indicated on the audio-visual drawings

2. Extension rings where required to provide a flush mount surface for cover plate mounting on finished walls.

3. Engraved nameplates on the equipment rack and any custom wall plates.

4. Coordination of all millwork mounting of any AVS device with the Architect and millwork providers.

5. Include work not usually shown or specified, but necessary for proper installation and operation of the system or piece of equipment.

6. All conduits, device junction boxes, wall plates and floor boxes, not shown on the electrical drawings, but required to complete the audio-visual system installation.

7. Installation of any specialty back boxes, including display backboxes, and speaker rough-in kits with j-boxes and flexible conduit connections.

8. Installation of all backing or structural support for flat panel displays, projectors, projection screens, speakers, and other AVS equipment not shown elsewhere in these drawings and specification but required to complete the audio-visual system installation.

9. Seismic and safety wires where required.

10. Connection of AVS equipment to Fire Alarm shunt wiring as required to mute AV systems during fire alarm event.

C. If not provided by others, Design, engineer and provide complete means of support, suspension, attachment and seismic restraint for all AVS equipment, including but not limited to, speakers, displays and projectors. (Hereinafter “support) of the Work of this

Specification in accordance with local building codes and regulations. Contractor shall obtain the services of an engineer licensed to perform this work within the State of Jurisdiction it is to be performed.

D. The AVS Contractor Work shall include installation or connection of certain materials and equipment furnished by others. Verify installation details, installation and rough-in locations from the actual equipment or from the equipment shop drawings.

E. Audiovisual Systems are diagrammatic, and are intended to convey the scope of work, indicating intended general arrangement of equipment. Follow Drawings in laying out Work and verify spaces for installation of materials and equipment based on actual dimensions of equipment furnished.

F. All miscellaneous system components including, but not limited to, cables, speakers, signal converters, interface panels and components, termination equipment, patch panels, backboards, converters, digital matrix switchers, digital video extenders, controllers, digital signal processors, amplifiers, pre-amps, custom faceplates, mounting hardware, fasteners, racks, cabinets, and any other related items shall be furnished and installed complete under this section, such that the system shall perform all functions listed herein in compliance with all of the specified requirements. Verify functionality of all signal chains for proper operation.

1.2 GENERAL REQUIREMENTS

A. Warranty: Furnish a written guarantee for a period of (1) one-year from date of acceptance. Provide Phone Contact information for service personnel within twenty-four hours of call and for exchange of faulty equipment. This obligation is limited to exclude conditions of misuse.

B. The one-year warranty also includes any software installed on the system. After AVS certification and acceptance, source code changes and/or additional programming, whether requested by the Owner or performed by the Installing Contractor, shall be warranted by the Installing Contractor for a period of one (1) year, with the Installing Contractor responsible for the diagnosis and repair.

C. The Contractor shall provide an annual “Software Maintenance” contract for consideration. This shall cover all software provided as part of this system and/or written for this system and shall include both routine upgrades to applications and operating systems, as well as any modifications to software that may be required by any of the AVS equipment provided on the project. The Software Maintenance contract shall commence immediately after expiration of the warranty period and continue for three (3) years.

D. Wherever a discrepancy in quantity of equipment, cable, devices, etc., (all materials), arises on the Drawing and/or Specifications, the Contractor shall be fully responsible for providing and installing all material and services required by the strictest condition noted on Drawings and/or in Specifications to ensure complete and operable systems as required by the Owner and Engineer.

E. The Contractor shall hold a valid State of California C-7 Low-Voltage license, shall have completed at least 10 projects of equal scope, shall have been in business of furnishing and installing systems of this scope and magnitude for at least five years, and capable of being bonded to assure the owner of performance and satisfactory service during the guarantee period.

F. The contractor shall hold all other licenses required by the legally constituted authorities having jurisdiction over the work.

G. All work shall be performed under the supervision of a company accredited by the AVS equipment manufacturer and such accreditation must be presented at the time of the bid.

H. The installing contractor shall be a factory authorized installer and warrantee station for the brand of equipment offered at the time of the bid and shall maintain a fully equipped service organization capable of furnishing adequate repair service to the equipment at time of bid. The installing contractor shall maintain a spare set of all major parts for the system at all times or have immediate access to replacement equipment.

I. All of the equipment in this specification shall be furnished and installed by Authorized Factory Installation technicians. The Contractor shall furnish a letter from the manufacturer of all major equipment, which certifies that the installing contractor is the Authorized Installer and that the equipment has been installed according to factory intended practices. The Contractor shall also furnish a written guarantee from the manufacturer that they shall have a service representative assigned to this area for the life of the equipment.

J. All AV systems equipment supplied shall be listed by Underwriters Laboratories or Nationally Recognized Testing Laboratory. A copy of the listing card for the proposed system shall be included with the contractor's submittal. Any equipment submitted that is not NRTL-listed shall be subjected to on-site testing by AHJ-approved agency at the Contractor's sole cost. All expenses related to such testing, including any repairs or replacements caused by damage to the equipment shall be borne by the Contractor.

K. Personnel: Use adequate numbers of directly-employed skilled technicians and installers who are thoroughly trained and experienced with the specified requirements and the methods needed for proper performance of the AV systems installation work specified herein. Use of temporary labor or sub-contracted labor shall not be allowed unless explicitly allowed elsewhere in this specification.

1. Designated Project Engineer: Provide a designated Project Engineer in responsible charge of the Design, CAD, In-House testing and on the on-site commissioning of the Project during all phases of the work of this specification. The Project Engineer shall hold a current InfoComm CTS-D along with all applicable AV equipment manufacturer certifications necessary to complete the work specified herein. The Project Engineer shall be the same individual through the execution of the work unless illness, loss of personnel, or other circumstances reasonably beyond the control of the Contractor intervene. All Certifications shall be held by the Project Engineer at the time of the bid and shall have at least five (5) years direct experience in similar work.

2. The Lead Technician shall have at least three (3) years direct experience in similar work. The AV technician assigned to this project shall be fully trained, qualified and carry valid and current industry certifications regarding the, installation, operation and testing of audiovisual systems. At least one lead technician shall hold a current InfoComm CTS-I, with all applicable AV equipment manufacturer certifications necessary to complete the work specified herein shall be assigned as Lead Technician to the project. All Certifications shall be held by the Lead Technician at the time of bid.

3. Custom Control System Programmer: Provide Manufacturers Certifications as required for the equipment used on this project. Provide at least one (1) full time programmer on staff, capable of on-site custom programming of the custom

remote-control system specified herein. Control System Programmer to hold the following certifications: InfoComm CTS-D, CTS-I or CTS along with Extron Control Professional (ECP) Certification, and Extron AV Associate certifications, or Crestron Master Programmer, at least Silver Level., or equivalent Certification from AMX, QSC Level 2. A programming Sub-Contractor may be used as long as the Programmer has the certifications as listed above.

4. Designated Project Manager: Provide Manufacturers Certifications as required for the equipment used on this project. Provide a designated Project Manager in responsible charge of the fabrication shop and on the Project Site during all phases of installation and testing of the work of this specification. The Project Manager shall hold current InfoComm CTS-D, CTS-I or CTS, and Extron AV Associate certifications or applicable and equivalent Certifications for Crestron or AMX, QSC Level 2 and shall be the same individual through the execution of the work unless illness, loss of personnel, or other circumstances reasonably beyond the control of the Contractor intervene.

5. Commissioning Personnel shall have a current AQAV Certified Quality Technician (CQT) certification in good standing and shall be capable of performing AV commissioning tests during staging and final commissioning of the system according to the AV 9000: Quality Management System for the Audio-Visual Technology Industry.

L. All the equipment in this specification shall be furnished and installed by the Authorized Factory Installer of the equipment with the most current software & firmware package available at the time of installation.

M. Software – Control System, DSP, and All Other Applicable Equipment

1. At the time of Owner Acceptance of the installation, all equipment shall include any and all updated software or hardware revisions including source code to allow the Owner to make alternations and modifications to AVS programming to include, but not limited to all custom programs for remote control system touch panels, control systems, Digital Signal Processors. The software developer shall retain intellectual property rights to the operation software. The Owner shall be granted a license in perpetuity for use. The following requirements shall apply:

   a. A written release shall be given by the Installing Contractor for all control programming done by the Installing Contractor's personnel or sub-contractors. The release shall acknowledge the Owner's ownership and right to modify programming directly, or to have the or to have the programming modified by others on the Owner's behalf.

   b. No program resident in a control system shall be overwritten until a back-up of the resident program is made programming modified by others on the University's behalf.

   c. All source code changes must be fully documented.

   d. At the completion of the project, (3) USB drives shall be supplied to the Owner with the written release that includes the program and source code for the system in an unencrypted format. All documentation, not residing in the code in Adobe PDF and Microsoft Office format.

N. Verifying Drawings and Job Conditions:

1. This Contractor shall examine all Drawings and Specifications in a manner to be fully cognizant of all work required under this Section.

2. This Contractor shall visit the site and verify existing conditions. Where existing conditions differ from Drawings, adjustment(s) shall be made and allowances included for all necessary equipment to complete all parts of the Drawings and Specifications.

O. Operation, Control Programming and Touch Panels

1. It is imperative for the AV Contractor to interview the user's staff to gather and document the various operational modes including signal routing of the DSP-Control System, IP Video Systems, and Device Control Requirements to ensure any controlled device is properly integrated into the Control system. Control via the QSC Touch Panels, Control Room Computer and other Existing System must be integrated as required. Pay particular attention to the existing Q-Lab computer as this currently controls the existing projector through the existing network. There will be (8) Paging Zones with additional paging routed via the Dante Network. The current and future projectors can also be controlled by the new Q-Qys touch panels.

1.3 QUALITY ASSURANCE

A. Design, manufacture, testing and method of installation of all apparatus and materials furnished under requirements of these specifications shall conform to latest publications or standard rules of the following:

1. AES - Audio Engineering Society

2. ANSI - American National Standards Institute

3. BICSI - Building Industry Consulting Service International, Inc.

4. CEDIA - Custom Electronic Design and Installation Association

5. Digital Display Working Group

6. EIA - Electronic Industries Alliance

7. FCC - Federal Communications Commission

8. HDMI Licensing, LLC

9. INFOCOMM - International Communications Industries Association

10. IEEE - Institute of Electrical and Electronic Engineers

11. ISO - International Organization for Standardization

12. ITU -Telecommunication Standardization Sect

13. MPEG - Moving Picture Experts Group

14. NAB - National Association of Broadcasters

15. CEC - California Electrical Code

16. NEMA - National Electrical Manufacturers Association

17. NFPA - National Fire Protection Association

18. NSCA - National Systems Contractors Association

19. CALOSHA - Occupational Safety and Health Administration

20. SMPTE - Society of Motion Picture and Television Engineers

21. TIA - Telecommunications Industry Association

22. CBC - California Building Code

23. UL - Underwriters Laboratories Inc.

24. VESA - Video Electronics Standards Association

25. Local Authority Having Jurisdiction (AHJ) Published Standards and Codes

B. The contractor is required to obtain the latest revisions of these standards and provide the infrastructure which meets the most stringent implementation of these standards

C. Perform Work in accordance with the California Electrical Code, applicable building ordinances, and other applicable codes, hereinafter referred to as the "Code." The Contractor shall comply with the Code including local amendments and interpretations without added cost to the Owner. Where Contract Documents exceed minimum requirements, the Contract Documents take precedence. Where code conflicts occur, the most stringent shall apply unless variance is approved.

1. Comply with all requirements for permits, licenses, fees and codes. The Contractor, at Contractor's expense, shall obtain all permits, licenses, fees, special service costs, inspections and arrangements required for Work under this contract, unless otherwise specified.

2. Comply with requirements of the applicable utility companies serving this Project. Make all arrangements with utility companies for proper coordination of Work.

1.4 WORK IN COOPERATION WITH OTHER TRADES

A. Examine the Drawings and Specifications and determine the work to be performed by the Architectural structural cabling, electrical, mechanical, structural, and other trades. Provide the type and amount of AVS materials and equipment necessary to place this work in proper operation, completely wired, tested and ready for use. This shall include all additional conduits, boxes and other devices for the required operation sequence of all AVS equipment.

B. Low voltage conduit, boxes and power provided by division 16 or 26000 contractor.

1.5 DELIVERY, STORAGE, AND HANDLING

A. Do not deliver equipment until site conditions are adequate to receive work; protect items from weather while in transit.

B. On-Site Storage

1. The Contractor shall be responsible coordinate and maintain a secure storage space.

2. If this storage space is required to be on-site it shall be the Contractor's responsibility to coordinate the size and spatial requirements with the Owner.

3. The Contractor shall assume full responsibility for the storage space and all contents, unless otherwise indicated by the Owner.

4. The Contractor shall examine the site and the Programmatic Documents and review with the Owner the designated areas of access, delivery, and storage for the Contractor's use. The Contractor agrees that such areas are satisfactory and sufficient for their needs in the completion of their work and in conformance with the terms of this Contract.

C. Store materials indoors in ventilated areas with constant, but minimum, temperature of 60 degrees F and a maximum temperature of 90 degrees F and maximum relative humidity of 25% to 55%.

D. Protection from Damage

1. The Contractor shall provide all protection necessary to safeguard their work from damage by their operations and the operations of others. Unless the Contractor proves to the Owner’s satisfaction that the Work has been damaged by others, the Contractor shall promptly repair, adjust, and clean all defective installations and bear all associated costs.

1.6 RECORD DRAWINGS

A. Drawings of Record:

1. The Contractor shall provide and keep up-to-date, a complete record set of drawings. These shall be corrected daily and show every change from the original Drawings. This set of prints shall be kept on the job site and shall be used only as a record set. This shall not be construed as authorization for the Contractor to make changes in the layout without written direction in each case. Upon completion of the work, a set of reproducible Contract Drawings shall be used to denote all changes as noted on the record set of prints shall be incorporated thereon with black ink in a neat, legible, understandable and professional manner. Refer to the Supplementary General Conditions for complete requirements.

1.7 APPROVALS, EQUALS, SUBSTITUTIONS, ALTERNATIVES, NO KNOW EQUAL

A. Approvals: Where the words (or similar terms) “approved”, “approval”, “acceptable”, and “acceptance” are used, it shall be understood that acceptance by the Owner, Architect and Engineer are required.

B. Equal: Where the words (or similar terms) “equal”, “approved equal”, “equal to”, “or equal by”, “or equal” and “equivalent” are used, it shall be understood that these words are followed by the expression “in the opinion of the Owner, Architect, and Engineer.” For the purposes of specifying products, the above words shall indicate the same size, made of the same construction materials, manufactured with equivalent life expectancy, having the same aesthetic appearance/style (includes craftsmanship, physical attributes, color and finish), and the same performance.

C. Substitution: For the purposes of specifying products “substitution” shall refer to the submittal of a product not explicitly approved by the construction documents/specifications.

1. Substitutions of specified equipment shall be submitted and received by the Engineer ten (10) days prior to the bid date for review and written approval. Regulatory Agency approval for all substitutions shall be the sole responsibility of the Contractor. To receive consideration, requests for substitutions must be accompanied by documentary proof of its equality with the specified material. Documentary proof shall be in letterform and identify the specified values/materials alongside proposed equal values/materials. In addition, catalog brochures and samples, if requested, must be included in the submittal. ONLY PRE-BID APPROVED PRODUCTS, ISSUED VIA A FORMAL BID ADDENDUM TO ALL BIDDERS, WILL BE ALLOWED ON THE PROJECT. REGARDLESS OF THE APPROVAL ON ANY SUBSTITUTION, ALL BIDS SHALL BE BASED ON THE PRODUCTS EXACTLY AS SPECIFIED. PRICING FOR EACH APPROVED SUBSTITUTION SHALL BE INCLUDED IN THE BID SUBMITTAL AS A SEPARATE LINE ITEM.

2. If the Contractor proposes to substitute the specified speaker system(s), the Contractor shall be responsible to provide the Owner & Engineer with an AMFG Electronic and Acoustic System Evaluation and Response Analysis (EASERA) model depicting equal or better performance in both uniformity of direct field response and Speech Transmission Index (STI) as compared to the specified speaker system.

3. In the event that written authorization is given for a substitution after award of contract, the Contractor shall submit to the Engineer quotations from suppliers/distributors of both the specified and proposed equal material for price comparison, as well as a verification of delivery dates that conform to the project schedule.

4. In the event of cost reduction, the Owner shall be credited with 100 percent of the reduction, arranged by Change Order.

5. The Contractor warrants that substitutions proposed for specified items shall fully perform the functions required.

D. Alternates/Alternatives: For the purposes of specifying products, “alternatives/alternates” may be established to enable the Owner/Architect/Engineer to compare costs where alternative materials or methods might be used. An alternate price shall be submitted in addition to the base bid for consideration. If the alternate is deemed acceptable, written authorization will be issued.

E. No Known Equal: For the purposes of specifying products, “No Known Equal” shall mean that the Owner/Architect/Engineer is not aware of an equivalent product. The Contractor will need to submit a “Substitution” item, per the requirements listed above, if a different product is proposed to be utilized.

1.8 SHOP DRAWINGS/SUBMITTALS

A. Shop Drawings/Submittals shall be submitted within 20 working days of a notice to proceed, in digital sets accompanied by Letter of Transmittal, which shall give a list of the number and dates of the drawings submitted. Drawings shall be complete in every respect and bound in sets.

B. The Shop Drawings/Submittals submitted shall be marked with the name of the project, numbered consecutively and bear the approval of the Contractor as evidence that the Contractor has checked the Specifications and the Drawings. Any Drawings and Specification submitted without this approval will be returned to the Contractor for resubmission.

C. If the shop drawings show variations from the requirements of the Contract because of standard shop practice or other reasons, the Contractor shall make specific mention of such variations in the Contractor's letter of transmittal. If the substitution is accepted, the Contractor shall be responsible for proper adjustment that may be caused by the substitution. Samples shall be submitted when requested.

D. Only products listed as "Equal" within the contract documents, along with formally approved "Substitutions" will be reviewed. Products not conforming to these items will not be reviewed and will be returned to the Contractor for re-submittal.

E. Review comments used in response to shop drawings/submittals are:

1. "No Exception Taken" - Product approved as submitted.

2. "Furnish as Corrected" - Re-submittal not required, although the Contractor shall provide the submitted product with corrections as noted.

3. "Revise And Resubmit" - Re-submittal required with corrections as noted.

4. "Rejected" - Re-submittal required based upon the originally specified product.

F. Shop drawings shall be submitted on the following but not limited to:

1. Audio, Video, and Control System diagrams.

2. Equipment Rack Elevations

3. AV Floor, Ceiling and Elevation Plans.

4. Control Panel & Touch Panel screen layouts

5. All other products called out on drawings that call for shop drawing submittal.

G. Shop drawings submittals shall be organized as follows:

1. Provide transmittal listing the project name (number), location, discipline, submittal sequence (1st, 2nd, etc.) and list of documents provided.

2. Provide complete equipment list in Excel and PDF.

a. Divide equipment list up in room / area section. For example: Theater, Choir Classroom, Lobby, Etc.

b. Equipment list shall be in alphabetic order for each section.

c. Each piece of equipment shall provide the following information:

1) Drawing reference name or number.

2) Quantity.

3) Manufacturer.

4) Model.

5) Equipment description.

3. Shop drawings

a. Provide and label equipment locations and groupings on one line drawings.

b. Provide name or number for all devices on one line and layout drawings coordinated with the equipment list.

c. Provide detailed drawings showing all information required for proper installation.

1.9 MAINTENANCE, SERVICING, INSTRUCTION MANUALS AND WIRING DIAGRAMS

A. Prior to final acceptance of the job, the Contractor shall furnish to the Owner at least four (4) copies of operating and maintenance and servicing instructions, as well as four (4) complete AV System wiring diagrams for the following, but not limited to, items or equipment:

1. Audio, Video, and Control Systems.

2. Rack Elevations.

3. Touch panel layout pages

4. Programming source code.

5. Operation manual to be written from the standpoint of a non-technical operator. Provide complete step by step AV and Control System operation.

6. Provide mixing console, AV device and control system images showing step by step operation as required.

B. All wiring diagrams shall specifically cover the system supplied. Typical drawings nor consultant supplied drawings will not be accepted. Four (4) copies shall be presented to the Owner.

PART 2 - SYSTEM EQUIPMENT SPECIFICATION

2.1 MATERIALS

A. Materials and Equipment: All AVS materials and equipment, including custom-made equipment, shall be new and shall be listed by Underwriter's Laboratories (UL) and bear their label or be listed and certified by a Nationally Recognized Testing Lab (NTRL) that is also recognized by the local Authority-Having-Jurisdiction (AHJ).

B. Frequency Coordination. Prior to ordering equipment, the Installing Contractor shall coordinate the frequencies of all wireless devices to prevent unwanted interaction between devices and rooms. This includes, but is not limited to, wireless microphones, assisted listening system devices, wireless control panels, etc. Verification of Frequency coordination shall take place with the use of a spectrum analyzer and frequency allocation/analysis software.

2.2 SYSTEM FUNCTIONS AND CAPABILITIES:

A. The Team Room AVS shall be utilized for presenting, viewing and listening to multimedia presentations. The system shall utilize/integrate where indicated, computer, microphone, and other inputs for output to the Video Projector and Sound Reinforcement Systems. The AV system shall be controlled by button Panel interface. The control system shall be able to control the required functions of the AV equipment, audio volume, audio switching, paging and control. See AV drawings for more detailed information regarding specific system functionality. The Pooal Area AVS shall be utilized for announcing, paging, and music playback. The system shall utilize/integrate where indicated, computer, microphone, and other inputs for output to the Sound Reinforcement Systems. The AV system shall be controlled by button Panel interface. The control system shall be able to control the required functions of the AV equipment, audio volume, audio switching, and control. See AV drawings for more detailed information regarding specific system functionality.

B. The AVS shall provide clear, natural sound uniformly distributed throughout the designated areas. The system shall utilize speakers as shown on the plans.

C. The system shall have adequate dynamic range without audible clipping or distortion to accommodate all types of program material. Audio, Digital Signal Processing shall be employed in the designated areas to insure smooth frequency response, high acoustical gain before feedback. When at maximum level, the system shall operate without audible distortion, rattles and buzzes. All switching shall be silent and without pops and or transients.

D. The system frequency response shall:

1. Be within +/- 1.5 dB from a curve which is flat from 80Hz to 10 kHz.

2. There shall be a minimum 12dB per octave roll-off below 32 Hz.

3. Uniformity of coverage of the system at seated ear height (42") shall be within +/- 1.5dB in the 4 kHz 1/3 octave band at any seat location using pink noise as a test signal.

E. System noise shall not exceed an equivalent input noise of -120dB based on a 20 KHz-noise bandwidth. The predominant noise component in the system output under any operating condition shall be that of the input stage.

F. The sound level capability of program material levels produced in all seats shall be at least 98 dB when measured with a scaled filter, set at “C Weighting”. There shall be at least 6dB of amplifier headroom.

G. The system shall provide clear audio to all areas covered by the system. All side, Left & Right and any stage lip, or under balcony speakers shall be wired discretely to the correct channel on the amplifier. See AVS drawings for exact location.

H. EDID and Color Space Management. EDID data exchange is a standardized means for a display to communicate its capabilities to a source device. It is the AVS contractor’s responsibility to address and resolve and manage all EDID and Color Space issues.

I. HDCP (High-bandwidth Digital Content) is an encryption protocol for copy protected video content as Blu-Ray Disc, HD movie downloads, Cable TV & Satellite TV. It is the Contractor’s responsibility for proper HDCP 2.2 and Digital Rights Management (DRM) in all systems listed in plans and this specification. This shall apply to all HDMI, DVI or Display Port signals. HDCP is not applicable to SDI signal lines, and no attempt to pass encrypted material through these signal paths shall be attempted.

J. CEC (Consumer Electronics Control) is device control functions between all connected HDMI devices. It is the AVS contractor’s responsibility for proper CEC Management in all systems listed in plans and this specification.

2.3 SOFTWARE PROGRAMMING

A. General: Except when otherwise agreed in writing the client shall retain legal and beneficial ownership of all Intellectual Property, including source code, created by the Contractor, their employees and sub-contractors.

B. The Contractor must allow sufficient time for the programming of all software configurable audio, video and control systems. Contractors must evaluate the systems functional requirements and user interface and then allow time in their bid accordingly. The system description as well as the end user interview will provide the Contractor with the necessary information needed to proceed with the programming. Any questions as to the systems functional requirements must be sent in written RFI form to the Consultant. All programming schemes must be submitted to the Consultant for approval before programming starts. This includes the appearance of all user interfaces, touch panel layouts, preset and sub-preset information (acquired through client interviews), and speaker control schemes. The Contractor shall also submit a narrative for the control system concept to the Consultant for approval. The Contractor is to interview the Owner and their representatives to acquire the necessary information needed to allow for the proper programming of this system. The Contractor, after interviewing the Owner, shall then submit a written report stating his interpretation of the client’s requirements for approval by Consultant. Only after the Client and Consultant have approved the programming report may the Contractor proceed with the programming of this system.

C. All equipment that is connected to the Client’s local area network and is configurable via the local area network must have its equipment software installed onto dedicated computers provided by the Client. The Contractor is to allot time to install and test equipment software onto a minimum of two of the Client’s computers which are to be identified by the Client and/or Consultant. The computers shall be programmed to emulate user interfaces throughout the facility. The Contractor shall coordinate all software deployment over IP with the Client’s Information technology department.

D. A user-friendly/easy to use graphical interface programmed by the Contractor shall allow for easy operation of the system. This interface shall allow novice users the control of the system components without having to access the digital schematic diagram. These main system components shall include master volume control, zone volume control, room combining, routing, switching, source-equipment level control and any other control necessary for the system to function properly from a user standpoint.

E. Control system minimum programming outlined below:

1. The Contractor shall allot as many hours as required for on-site control system programming with the Client's representative.

2. The Control System in this project may connect to the Client's Local Area Network (LAN). This connection will provide desktop computers control of the audio-visual system as well as make available remote troubleshooting via the internet and (If applicable) QSC Q-Sys Control, Crestron Fusion, Room View. IP Video System monitoring/control or Extron Global Configurator Plus and/or Global Configurator Professional. The Contractor shall provide time to install control system interface software on at least three desktop computers. Coordinate work with Client's Information Services personnel.

3. Provide password protection to each control surface in this facility.

4. Touch panels shall be activated and deactivated by password. Upon start up a password dialog box shall be presented to the user to enter his/her password. Only after entering a password will the user have access to the system. The system shall be programmed to shut down automatically after being idle for a time to be specified by the user.

5. Touch panel layout design shall conform to the InfoComm International "Dashboard for Controls" and programming guidelines. Touch panel designs are to be custom to this project. Re-purposed touch panel designs are not acceptable.

6. Control Help File: Each touch panel shall include a help file that will explain each layer of the touch-panel control scheme.

7. Control system shall utilize help desk software to provide:

    a. Real-time monitoring (If Possible) of: Control system, Device monitoring, Projector lamp life, System online status, Room activity, Remote system diagnostics via Contractors help desk, Remote system control, Fault reporting via email alert, Logging of help request, User access control via password protection, Event logging, report and chart generation.

8. All serial controlled devices must have bi-directional communication with the control system. All control functions locally available on each device must be accessible via the remote-control system. All locally gestured control functions must mirror on the control system user interface. In other words, if a volume control is adjusted on a DSP interface that adjustment must register on the control interface.

9. Control system shall be used to power up and down connected equipment.

10. All projectors shall be monitored and report lamp hours remaining and lamp

failure.

F. Complexity of Programming:

1. It is required that the Contractor be experienced in the specified Control System and shall have experience in Professional programming and programming systems of this complexity. Contractors shall allow enough time in their bid to permit extensive programming of all software configurable audio, video and control systems to the requirements of the client and consultant. Contractor shall break out cost associated with programming of these systems for review by the Consultant. By submitting this bid, the Contractor agrees that they understand systems of this type and that all programming services are included to the satisfaction of the Consultant. The Contractor further agrees that they shall not make any claim for additional monies because of misinterpretation of programming requirements.

2. It is imperative for the AV Contractor to interview the user's staff to gather and document the various operational modes including signal routing of the DSP-Control System, IP Video Systems, and Device Control Requirements to ensure any controlled device is properly integrated into the Control system. Control via the QSC Touch Panels, Control Room Computer and other Existing System must be integrated as required. The Dante Network may be quite extensive and must be labeled and organized. Dante routing presets will be provided as necessary.

G. Control System Programming. Minimum Touch Panel Functions. Coordinate all functional programming with the owner before final programming sign off.

2.4 AUDIO VISUAL SCOPE OF WORK

A. Pool Area System

1. The AV system shall provide inputs for announcing, paging, and music playback. The system shall utilize/integrate where indicated, computer, microphone, and other inputs for output to the Sound Reinforcement System. There shall be (2) XLR, (1) 1/8", and a Bluetooth input mounted in a NEMA rated monument enclosure. The system shall be controlled via mounted button control panel inside NEMA rated monument enclosure. There shall be the appropriate number of speakers spaced to provide intelligible sound throughout the area of concern. The system shall include a wireless system with a handheld microphone for speech reinforcement. There shall be a monument mounted outlet to provide line level signal to an ALS system or for recording purposes.

2.5 AUDIO/VISUAL SYSTEM PRODUCTS

A. The system shall utilize AV products as shown on the Plans and listed below shall be unless otherwise specified. The products listed below shall be considered to be the minimum quantity, performance, functionality and quality levels. If additional and/or upgraded components are needed to meet the performance requirements of this final design-build specification, the contractor shall include all costs for such added and/or upgraded components in the base bid.

B. Pool Area

1. Extron DSP-128 PLUS AT digital signal processor.

2. RDL DDB-BTN44 - (1) Line level in , (1) line level out, (1) Bluetooth in wall plate.

3. RDL DDB-BN2M – (2) XLR mic level

4. Extron NBP-110D wall mounted controller.

5. Extron IPCP Pro 250 – Controls processor

6. Powersoft QUATTROCANALI 2404 DSP+D

7. Electrovoice SX-300PIX outdoor speakers.

    a. Per speaker array on each pole, speakers shall be mounted using the following:

        1) Mounting kit, Electro-Voice P/N Mb200, quantity 2
        2) Mounting kit, Electro-Voice P/N Mb300, quantity 1
        3) Suspension kit, Adaptive Technologies P/N SAS-1WA-40, quantity 1

8. Cisco SG350-28P Managed AV network switch.

9. Shure ULXD24/58 wireless system with Charging base and remote antenna brackets.

10. Furman PL PLUS-DMC power distribution unit.

11. Chatsworth Wall mounted AV rack 11840-736 with fans and accessories.

D. ADA-CBC COMPLIANT ASSISTIVE LISTENING SYSTEM: (If not already present.)

1. The ALS system is existing. The ALS system shall be verified to meet the latest CBC 2014 requirements. Verify the quantity of portable receivers required as indicated in the table below. The Stationary Assistive Listening System shall be integrated into and work in conjunction with the sound reinforcement systems. Adjust as required for total coverage of seating areas. ADA Table 219.3 Receivers for Assistive Listening Systems.

Capacity of Seating in Assembly Area	Minimum Number of Required Receivers	Minimum Number or Required Receivers Required to be Hearing Aid Compatible
50 or less	2	2
51+	4% OF MAX OCCUPANCY	25%

Note: 1. or fraction thereof.

2.6 CABLE – ALL SPACES

A. Speaker Cable, 70-Volt distribution, Plenum Rated 2-Conductor, 14 AWG, unshielded pair: Extron, West Penn, Belden or equal.

B. Loudspeaker Cable, Plenum Rated 2-Conductor, 12 AWG, unshielded pair: Extron, West Penn, Belden or equal.

C. Loudspeaker Cable, Plenum Rated 2-Conductor, 14 AWG, unshielded pair: Extron, West Penn, Belden or equal.

D. Analog Microphone/Line Level Installation Cable, 22 AWG conductor, jacketed, shielded, twisted-pair, Plenum Rated: Extron, West Penn, Belden or equal.

E. Control System Device Control (RS232, Relay or Contact Closure): (Dual 22 AWG shielded twisted pairs with individual drain wires, each pair is color-coded Red/Black and Green/White to simplify identification.) Plenum Rated: Extron, West Penn, Belden or equivalent.

F. Data Network: Plenum-rated Category 6, see Structured Cabling Specifications for additional requirements.

G. Serial Digital Interface Cable RG6/U, 75 Ohm Coaxial Cable Belden 4694R or equal. 12G-SDI up to 258'. Provide the correct BNC connector for the specified cable. Provide 12G-HD-SDI extension if cable runs are longer than 225'

H. Provide plenum rated cable for all cable where required by code. Any cable changes or substitutions must be submitted and approved prior to installation. Non-compliant cable that has been installed without approval shall be replaced at the Contractor's expense.

I. Fiber, OM4. MM, 50 micron / 8 strand or strands as required.

J. Video over IP, CAT6 Belden, West Penn or equal.

PART 3 - EXECUTION

3.1 GENERAL INSTALLATION DESCRIPTION

A. The installation, configuration and wiring of the system shall be executed in accordance with the drawings and the equipment manufacturer's installation instructions and guidelines. Should any variations in these requirements occur, the Contractor shall notify the architect before making any changes. It shall be the responsibility of the factory-authorized installer of the approved equipment to install the equipment and guarantee the system to operate as per plans and specifications.

B. Workmanship on the installed systems shall be of professional quality, best commercial practice and accomplished by persons experienced in the techniques and standards of the particular industries involved.

C. Furnish all Additional conduits, AV Back-boxes, conductors, equipment plugs, terminal strips, etc., and labor to install a complete and operable system.

D. The cables within the rack or cabinets shall be carefully cabled and laced with Velcro

wraps. All cables shall be numbered for identification. Cables should have enough slack to allow removal of equipment for service without having to cut multiple Velcro ties or wire wraps. Power plugs need to be labeled at PDU.

E. Splices of conductors in underground pull boxes are not permitted.

F. All communications cabling used throughout this project shall comply with the requirements as outlined per CEC. All copper cabling shall bear UL listed type CMP (Plenum Rated) and/or CM/G (General Purpose) and/or CMR (Riser Rated). All fiber optic cabling shall bear OFNP (Plenum Rated) and/or OFNR (Riser Rated) and/or OFN/G (General Purpose). Contractor is responsible for installing appropriately rated cable for the environment in which it is installed.

G. The Contractor shall thoroughly clean all equipment and materials. All exposed parts of the equipment, cabinets, and other equipment shall be left in a clean condition, unblemished and free of all dirt, dust, smudges, spots, fingerprints, etc., The Contractor shall remove all debris and rubbish occasioned by the work from the site. The Contractor shall thoroughly clean all buildings of any dirt, debris, rubbish, marks, etc., Caused by the performance of this work.

H. The Conduit System. Each conduit shall contain wires or cables of the same signal level or the same type of circuitry only. Low Level Lines, medium level lines, video level lines, high level lines and data and control circuits should be run in their respective separate conduits.

I. Wiring and Cabling. During installation both ends of all single wires or cables shall be marked with consecutive approved number markers, and a careful running log kept of route and terminations. After attachment at terminations these markers shall be accessible and readable for identification. A detailed wiring diagram shall be furnished with these numbers shown. At the operational level (i.e. Audio-Visual equipment receptacle boxes, etc.) all receptacles shall be clearly marked by function and number (when there are many of the same function). For example, where a given microphone line may appear at several locations, the same label shall show.

J. Power distribution cables shall not be installed adjacent to signal cables. Power distribution cabling shall be on the opposite sig of the equipment enclosure from signal cables and shall be uniformly located throughout the installation.

K. Wherever signal lines entering the equipment areas must be connected into the racks, the use of intermediate terminal strips shall be used. This shall also facilitate the testing of maximum increments of the systems in the Contractor's shop. UTP Cables shall terminate in a Patch Panel and / or Switch. All connections of lines at terminal strips, as well as at signal receptacles, shall be mechanically secured and then soldered. No unsoldered connections shall be permitted.

L. Where lines approach the racks and terminal strips they shall also be mechanically anchored at the rack, and provided with sufficient slack length to avoid strain, abrasion or wear. All cable entry shall be through the tops of racks or through entrance holes in the base of the rack. No cable shall enter racks through front, rear or side panel openings. For equipment mounted in drawers or on slides, the interconnecting cables shall be provided with a service loop of appropriate length. Cables shall not protrude from the back of racks. All system wire, after being cut and stripped, shall have the wire strands twisted back to their original lay and be terminated by approved soldered or mechanical means.

M. System Grounding.

1. The "spider" concept is designed to avoid ground loops and inductive coupling.

2. The systems shall be hum free, stable and free of oscillation with the earth ground temporarily disconnected.

3. The earth ground shall be made at only one point in the system as indicated and shall be in accordance with National Fire Protection Association 70-2014.

4. The grounding method shall insure that the system is free of the following problems under any mode of operation:

   a. RF oscillation, pickup and interference.

   b. Distortion.

   c. Crosstalk.

   d. Signal Leakage.

   e. Very high frequency feedback.

   f. Audio Hum.

5. The equipment racks shall be isolated from, and not electrically connected to, the building grounding system. This means that the conduit system shall not be electrically connected to the equipment racks and that the equipment racks shall be installed so that they are electrically isolated from the building structural steel. The racks shall be electrically connected at only one point to the isolated grounding system.

6. In order to ensure the least amount of cable un-twisting, it is required that all cables shall be stripped using a special tool.

7. The use of lubricants (i.e. Yellow 77) to facilitate the installation of cables in conduits is highly discouraged. If such a lubricant must be used, the Contractor shall verify the acceptability of the lubricant to be used with the cable manufacturer, prior to using such a lubricant.

8. Under no circumstance are "channel locks" or other pliers to be used.

9. Plenum rated cable may be run exposed above ceilings, provided the cabling is supported independent of other utilities such as conduits, pipes, and the ceiling support systems. The cables shall not be laid directly on the ceiling panels. The use of cable ties shall be done in accordance with the cable manufacturer's requirements. The cable jacket composition must meet local and all other prevailing fire and safety codes.

10. Labeling

11. Wiring Labels: At all connection points for all types of cable & wiring, a label strip shall be attached indicating the name/number of that cable or wire as follows:

    a. At internal locations (inside racks, cabinets, or boxes), a pressure

sensitive label shall be used.

b. At external locations, a printed label covered with clear shrink wrap or approved labeling system shall be used.

12. Equipment Labels: All active components shall have labels at the front and rear. Labels shall be applied plumb and neat and shall not cover any equipment lights, recessed controls, or control labels.

a. Front labels shall indicate functional use of equipment.

b. Rear labels shall indicate system schematic reference designation.

3.2 PERFORMANCE TESTS OF THE COMPLETE SYSTEM.

A. Verify that all wiring is correctly and completely installed

B. Verify that the entire system performance is in accordance with the design requirements.

C. All these tests, and any others that the Contractor may wish for his own satisfaction, shall have been performed and successfully achieved before observation is requested. The Owner's representative may request repetition and demonstration during observation of certain of these tests or other critical tests if problems become apparent. If specifications are not met, further observations shall be at the Contractor's expense.

D. Sealing of openings between floors, into or through rated fire and smoke walls, existing or created by the contractor for placement of new or removal of old cable into or through shall be the responsibility of the contractor. Sealing material (Approved UL listed system) and application of this material shall be accomplished in such a manner that is acceptable to the local fire and building authorities having jurisdiction over this work. Creation of such openings as are necessary for cable passage between locations as shown on the drawings shall be the responsibility of the contractor's work. Any openings created by or for the contractor and left unused shall also be sealed as part of this work.

E. Fire stopping work shall be performed by a single contractor to maintain consistency and accountability on the project.

1. The Contractor shall install penetration firestop seal materials in accordance with design requirements, and manufacturer's instructions.

2. The Contractor's installer shall be certified, licensed or otherwise qualified by the fire stopping manufacturer as having been provided the necessary training to install manufacturer's products per specified requirements.

3. All installed through penetration firestops shall be identified via label, or stencil. Label shall state that the fill material around the penetrating item is a firestop, and that it shall not be disturbed unless by an authorized contractor. The label shall include the firestop brand name, and the classified system number for which it was installed.

4. Sample Label:

a. MANUFACTURER'S NAME

b. ATTENTION

c. Fire Rated Assembly

d. For Any Changes To This System, Please Refer To UL System Listed Below

e. PRODUCT

f. HOUR RATING

g. UL SYSTEM

h. INSTALLATION DATE

i. INSTALLED BY

j. LICENSE NUMBER

k. PHONE

l. FAX

F. Equipment Rack and Equipment Testing and Adjusting Procedures: Conduct procedures in fabrication shop. Verify safe and proper operation of all components, devices, or equipment, establish nominal signal levels within the systems and verify the absence of extraneous or degrading signals. Make all preliminary adjustments and document the setting of all controls, parameters of all corrective networks, voltages at key system interconnection points, gains and losses, as applicable. Submit test report with color photographs of each equipment rack, front and back. Perform at least the following procedures:

G. Preliminary: Verify: Grounding of devices and equipment. Integrity of signal and Audiovisual system ground connections. Proper provision of power to devices and equipment. Integrity of all insulation, shield terminations and connections.

H. Integrity of soldered connections. Absence of solder splatter, solder bridges. Absence of debris of any kind, tools, etc. Routing and dressing of wire and cable.

1. All wiring, including polarity and continuity, including conformance with wire designations on running sheets, field and shop drawings.

2. Mechanical integrity of all support provisions.

I. All new equipment racks shall be bolted to the floor/millwork by the Contractor once the Owner determines the exact location for new rack. Contractor to verify the original Middle Atlantic racks are bolted to floor and seismic bracing are installed to code. The earthquake mounting brackets for each rack kit shall be screwed to studs, not drywall. All equipment shall be serviceable in the racks final location – the need to unbolt racking equipment to access or service equipment is not acceptable

J. Cleaning

1. Clean each section or area of where the work was conducted after completion to permit immediate use of the area.

2. Remove and discard all refuse, rubbish, and debris.

3. The Contractor shall ensure that all recyclable and environmentally-hazardous waste materials are disposed properly.

4. Make good all existing structures, surfaces, and utilities affected by cutting, coring, mounting, drilling, or other new work.

5. Clean all furnished equipment of dust, dirt, finger prints, smudge, and other material prior to calling for a Substantial Performance of Work Review or Completion of Work Review.

3.3 PROTECTION

A. During the installation phase and up to the date of achieving Substantial Performance of Work, protect finished or unfinished work against damage or loss. In the event of such damage or loss, immediately replace or repair such work or equipment at no cost to the Owner.

3.4 SPECIFIC SYSTEM INSTALLATION REQUIREMENTS

A. The installer shall, upon completion of the system, orient all antennas, speakers, align all projectors, screens and displays, adjust all controls, etc., to provide a system operating at maximum capability. Submit block diagram and shop drawing of equipment.

3.5 GENERAL TESTING REQUIREMENTS

A. Provide all instruments for testing and demonstrating in the presence of the owner's inspector that the all audio, digital video and control parameters are as stated in the factory data sheets. Check all circuits and wiring to verify they are free of shorts and grounds.

1. Equipment and components in need of adjustment, repair or replacement and discovered during such testing, shall be immediately adjusted, repaired or replaced with all new equipment and that part of the system shall then be retested. All such replacement or repair shall be done at no additional cost to the owner.

3.6 SPECIFIC AUDIO TESTING REQUIREMENTS

A. Furnish all laptops, software, equipment and personnel to conduct these tests in accordance with the performance specification requirements. ANSI and EIA Standards.

1. Audio testing and adjustment:

2. Adjust all audio levels. Measure and record absolute impedance at 400 Hz and 1 kHz for each and every speaker line. Correct polarity of all speaker lines.

3. Each “leg” of every individual speaker line shall be measured using a volt meter to ensure that there are no shorts to ground.

4. When the system is brought to full power, there shall be no hums, buzzes, rattles, or indication of any abnormal speaker noise.

5. Audio, check for continuity, polarity, cold solder connections, shorts and opens

B. Provide full flat panel monitor display calibration and adjustments for optimal picture quality for a single HDMI input. Provide proper aspect ratio configuration for both 16:9 and 16:10 sources. Use a test generator (I.E. Extron VTG or equal): for all setup verification and verify proper image configuration with the all inputs. (Contract the Owner's Technical Representative prior to final adjustment to coordinate).

1. Controls: Adjust all controls to achieve the specified performance. Provide shaft-locks or covers for all level controls, as appropriate to prevent unauthorized gain changes. Contractor shall confirm that all control system operations are properly programmed and repeatable.

2. Contractor shall review and assess the appropriate Lens Throw length between all video projectors and the projection screens to ensure optimum picture sizing and focus. Make all adjustments necessary, including projector keystone correction and lens shift to achieve the image size and shape required.

3. Provide full video projector calibration and adjustments for optimal picture quality for all used inputs. Provide proper aspect ratio configuration for 4:3, 16:9 and 16:10 sources. Set all projector configuration presets required for control system recall coordination and provide with final system documentation.

4. Testing Report: Provide a letter/report documenting the results of these preliminary tests, including amplifier gain/level settings, DSP EQ filter settings, and AV equalization curves for review by the AV Design Consultant and Owner.

5. The Contractor is fully responsible align, program, and test the sound speaker system to include the left, right, and center arrays as well as subwoofer speakers where these occur, to the respective speaker manufacturer specifications as required to achieve required uniformity of coverage as specified herein.

6. Contractor shall and utilize provide the following Calibrated Test Instruments as a minimum during commissioning and acceptance testing:

7. Sensitive AC voltmeter, -80dBu sensitivity or more, 20Hz -30KHz response, able to measure signal to noise ratio, THD, electrical levels within the system. Note that some systems require measurements up to 100 volts and may require an external pad.

8. Sound Pressure Level Meter, ANSI Type I with A and C weighting filters, fast or time averaged.

9. Audio Signal Generator, 20Hz-30kHz, sine wave, pink noise, and continuous sine wave sweep.

10. Amplified Loudspeaker 100 mm producing 60 dBa at one meter, and 70 dBa at one meter, pink noise, sine wave, and speech files.

11. 200Mhz Oscilloscope, with TV sync (analog video only).Analog Signal Generator NTSC/PAL, plus computer patterns at all required resolutions and refresh rates required for the systems under test. For systems with composite video, include

Pluge pattern. (analog video only)

12. Digital Signal Video Generator for computer patterns for all resolutions and refresh rates required for the systems under test, HDMI/DVI/HD-SDI with and without HDCP.

13. The ability to measure STI-PA (source analyzer).

14. Colorimeter/luminance meter, 10% accuracy.

15. Infrared thermometer.

C. Test media with known levels (audio, video, etc.): Cd's, VS, DVD's etc.

1. AD/DC multimeter.

2. Light meter, lux/foot-candles.

a. Outlet tester (to test power outlet wiring).

b. The ability to measure electrical power (watt meter, clamp meter, etc.).

c. Cable sets, cable assemblies, adapters as required to sample and measure in-or-out of circuit as required.

d. Computer with Smaart v8 or Systune. Outboard Dual Channel Preamplifier and Calibrated microphones. Earthworks M23 or equal.

e. All equalization shall be accomplished using FFT Transfer Function. No real time analysis methodology shall be allowed.

f. Verification of Frequency coordination shall take place with the use of a spectrum analyzer and frequency allocation/analysis software.

g. Testing Report: Provide a letter/report documenting the results of these preliminary tests, including amplifier gain/level settings, crossover filter settings, and AVS equalization curves for review by the AV Design Consultant.

3.7 SPECIFIC AUDIO-VISUAL SYSTEM NETWORK CABLING TESTING REQUIREMENTS

A. Category 6 Cable Testing.

1. The Contractor shall provide competent, factory-trained engineers and/or technicians, authorized by the manufacturer of the cabling system, to technically supervise and participate during all tests for the systems.

2. The Contractor shall test and certify the cabling system to minimum standards as set forth in the ANSI/TIA/EIA-568-C specifications for Category 6 cable as appropriate

3. General Requirements – Category 6.

a. Every cabling link in the installation shall be tested for:

1) Wire Map

2) Length

3) Insertion Loss

4) NEXT Loss

5) PS NEXT Loss

6) ELFEXT Loss

7) PS ELFEXT Loss

8) Return Loss

9) Propagation Delay

10) Delay Skew in accordance with the field test specifications defined in ANSI/TIA/EIA-568-C. This document will be referred to as the "TIA Cat 6A Standard."

b. In addition to testing the "In-link" performance parameters detailed in 3.a above, Alien Crosstalk testing or "Between-link' testing shall be carried out in accordance with Annex E of the TIA Cat 6A Standard. Alien crosstalk testing includes the PS ANEXT and PS AACR-F (Power sum alien attenuation-to-crosstalk ratio from the far end) performance parameters. The standards refer to the link-under-test for Alien Crosstalk as the disturbed link.

c. PS ANEXT and PS AACR-F shall meet or exceed the limits defined in Section 7.8 of the TIA Cat 6 Standard.

4. The installed twisted-pair horizontal links shall be tested from the Switch located in the equipment rack to all end points throughout the AV System for compliance with the "Permanent Link" performance specification as defined in the TIA Cat 6A Standard.

5. One hundred percent of the installed cabling links must pass the requirements of the standards mentioned in 3.a above and as further detailed in Section B. Any failing link must be diagnosed and corrected. The corrective action shall be followed with a new test to prove that the corrected link meets the performance requirements. The final and passing result of the tests for all links shall be provided in the test results documentation in accordance with Section C below.

6. Trained technicians who have successfully attended an appropriate training program and have obtained a certificate as proof thereof shall execute the tests. Appropriate training programs include but are not limited to installation certification programs provided by BICSI or the ACP (Association of Cabling Professionals).

7. The test equipment (tester) shall comply with the accuracy requirements for level IIIe field testers as defined in the TIA Cat 6 Standard. The tester including the appropriate interface adapter must meet the specified accuracy requirements. The accuracy requirements for the permanent link test configuration (baseline

accuracy plus adapter contribution) are specified in Table I.1 of Annex I of the TIA Cat 6A Standard. (Table I.1 in this TIA document also specifies the accuracy requirements for the Channel configuration.)

8. The test plug shall fall within the values specified in test plug NEXT loss requirements of the TIA Cat 6A Standard.

9. The tester shall be within the calibration period recommended by the vendor in order to achieve the vendor-specified measurement accuracy.

10. The tester interface adapters must be of high quality and the cable shall not show any twisting or kinking resulting from coiling and storing of the tester interface adapters. In order to deliver optimum accuracy, preference is given to a permanent link interface adapter for the tester that can be calibrated to extend the reference plane of the Return Loss measurement to the permanent link interface. The contractor shall provide proof that the interface has been calibrated within the period recommended by the vendor. To ensure that normal handling on the job does not cause measurable Return Loss change, the adapter cord cable shall not be of twisted-pair construction.

11. The Pass or Fail condition for the link-under-test is determined by the results of the required individual tests (detailed in ANSI/TIA/EIA-568-C). Any Fail or Fail* result yields a Fail for the link-under-test. In order to achieve an overall Pass condition, the results for each individual test parameter must Pass or Pass*.

12. A Pass or Fail result for each parameter is determined by comparing the measured values with the specified test limits for that parameter. The test result of a parameter shall be marked with an asterisk (*) when the result is closer to the test limit than the accuracy of the field tester. The field tester manufacturer must provide documentation as an aid to interpret results marked with asterisks. To which extent '*' results shall determine approval or disapproval of the element under test shall be defined in the relevant detail specification, or agreed on as a part of a contractual specification.

13. Owner or owner's representative shall be invited to witness field testing. The representative shall be notified of the start date of the testing phase five business days before testing commences.

B. Category 6 – Performance Test Parameters: The test parameters for Cat 6 are defined in the TIA Cat 6 standard. The test of each link shall contain all of the following parameters as detailed below. In order to pass the test, all measurements (at each frequency in the range from 1 MHz through 250 MHz) must meet or exceed the limit value determined in the above-mentioned standard.

1. Wire Map: Shall report Pass if the wiring of each wire-pair from end to end is determined to be correct. The Wire Map results shall include the continuity of the shield connection if present.

2. Length: The field tester shall be capable of measuring length of all pairs of a basic link or channel based on the propagation delay measurement and the average value for NVP (1). The physical length of the link shall be calculated using the pair with the shortest electrical delay. This length figure shall be reported and shall be used for making the Pass/Fail decision. The Pass/Fail criteria are based on the maximum length allowed for the Permanent Link configuration (90 meters – 295 feet) plus 10% to allow for the variation and

uncertainty of NVP.

3. Insertion Loss (Attenuation): Insertion Loss is a measure of signal loss in the permanent link or channel. The term “Attenuation” has been used to designate “Insertion Loss.” Insertion Loss shall be tested from 1 MHz through 250 MHz in maximum step size of 1 MHz. It is preferred to measure insertion loss at the same frequency intervals as NEXT Loss in order to provide a more accurate calculation of the Attenuation-to-Crosstalk ratio (ACR) parameter. Minimum test results documentation (summary results): Identify the worst wire pair (1 of 4 possible). The test results for the worst wire pair must show the highest attenuation value measured (worst case), the frequency at which this worst case value occurs, and the test limit value at this frequency.

4. NEXT Loss: Pair-to-pair near-end crosstalk loss (abbreviated as NEXT Loss) shall be tested for each wire pair combination from each end of the link (a total of 12 pair combinations). This parameter is to be measured from 1 through 250 MHz. NEXT Loss measures the crosstalk disturbance on a wire pair at the end from which the disturbance signal is transmitted (near-end) on the disturbing pair. The maximum step size for NEXT Loss measurements shall not exceed the maximum step size defined in the standard as shown in Table 1. Minimum test results documentation (summary results): Identify the wire pair combination that exhibits the worst case NEXT margin and the wire pair combination that exhibits the worst value of NEXT (worst case). NEXT is to be measured from each end of the link-under-test. These wire pair combinations must be identified for the tests performed from each end. Each reported case shall include the frequency at which it occurs as well as the test limit value at this frequency.

Table 1 -- Maximum frequency step size as defined in

Frequency Range (MHz)	**Maximum Step size (MHz)**
1 – 31.25	0.15
31.26 – 100	0.25
100 – 250	0.50
250 – 500	1.00

5. PSNEXT Loss: Power Sum NEXT Loss shall be evaluated and reported for each wire pair from both ends of the link under-test (a total of eight results). PSNEXT Loss captures the combined near-end crosstalk effect (statistical) on a wire pair when all other pairs actively transmit signals. Like NEXT this test parameter must be evaluated from 1 through 250 MHz and the step size may not exceed the maximum step size defined in the standard as shown in Table 1. Minimum test results documentation (summary results): Identify the wire pair that exhibits the worst-case margin and the wire pair that exhibits the worst value for PSNEXT. These wire pairs must be identified for the tests performed from each end. Each reported case shall include the frequency at which it occurs as well as the test limit value at this frequency.

6. ELFEXT Loss, pair-to-pair: Pair-to-pair FEXT Loss shall be measured for each wire-pair combination from both ends of the link under-test. FEXT Loss measures the crosstalk disturbance on a wire pair at the opposite end (far-end) from which the transmitter emits the disturbing signal on the disturbing pair. FEXT is

measured to compute ELFEXT Loss that must be evaluated and reported in the test results. ELFEXT measures the relative strength of the far-end crosstalk disturbance relative to the attenuated signal that arrives at the end of the link. This test yields 24 wire pair combinations. ELFEXT is to be measured from 1 through 250 MHz and the maximum step size for FEXT Loss measurements shall not exceed the maximum step size defined in the standard as in Table 1. Minimum test results documentation (summary results): Identify the wire pair combination that exhibits the worst-case margin and the wire pair combination that exhibits the worst value for ELFEXT. These wire pairs must be identified for the tests performed from each end. Each reported case shall include the frequency at which it occurs as well as the test limit value at this frequency.

7. PSELFEXT Loss: Power Sum ELFEXT is a calculated parameter that combines the effect of the FEXT disturbance from three wire pairs on the fourth one. This test yields eight wire-pair combinations. Each wire-pair is evaluated from 1 through 250 MHz in frequency increments that do not exceed the maximum step size defined in the standard as shown in Table 1. Minimum test results documentation (summary results): Identify the wire pair that exhibits the worst pair combinations must be identified for the tests performed from each end. Each reported case shall include the frequency at which it occurs as well as the test limit value at this frequency.

8. Return Loss: Return Loss (RL) measures the total energy reflected on each wire pair. Return Loss is to be measured from both ends of the link-under-test for each wire pair. This parameter is also to be measured from 1 through 250 MHz in frequency increments that do not exceed the maximum step size defined in the standard as shown in Table 1. Minimum test results documentation (summary results): Identify the wire pair that exhibits the worst-case margin and the wire pair that exhibits the worst value for Return Loss. These wire pairs must be identified for the tests performed from each end. Each reported case shall include the frequency at which it occurs as well as the test limit value at this frequency.

9. Propagation Delay: Propagation delay is the time required for the signal to travel from one of the link to the other. This measurement is to be performed for each of the four wire pairs. Minimum test results documentation (summary results): Identify the wire pair with the worst-case propagation delay. The report shall include the propagation delay value measured as well as the test limit value.

10. Delay Skew [as defined in the TIA Cat 6A Standard; Section 7.5] This parameter shows the difference in propagation delay between the four wire pairs. The pair with the shortest propagation delay is the reference pair with a delay skew value of zero. Minimum test results documentation (summary results): Identify the wire pair with the worst-case propagation delay (the longest propagation delay). The report shall include the delay skew value measured as well as the test limit value.

11. PS ANEXT: Pair-to-pair Alien NEXT (ANEXT) contributions is measured by applying the stimulus signal at the near end to one wire pair of a disturbing link and measuring the coupled signal at the near end of a wire pair in a disturbed link. This process is repeated for every wire pair in a disturbing link. The PS ANEXT for each wire pair in a disturbed link is obtained by the power sum addition of all the pair-to-pair ANEXT results to that wire pair from all wire pairs in disturbing links. All the links that are bundles with the disturbed link need to be included as disturbing links. In addition, links that are terminated in adjacent positions in a patch panel or interconnect panel must also be included as disturbing links in this test.

12. Minimum test results documentation (summary results): Identify the wire pair that exhibits the worst-case margin and the wire pair that exhibits the worst value for PS ANEXT. These wire pairs must be identified for the tests performed from each end. Each reported case shall include the frequency at which it occurs as well as the test limit value at this frequency.

13. PS AACR-F: The pair-to-pair Alien Far End crosstalk (AFEXT) contributions is measured by applying the signal at the near end to one wire pair of a disturbing channel or permanent link and measuring the coupled signal at the far end of a wire pair in a disturbed channel or permanent link. This process is repeated for every wire pair in a disturbing link and for all links in close proximity. A normalization, which is dependent on the relative length of disturbing and disturbed link, is applied to each pair-to-pair alien FEXT measurement. Then the PS Alien Attenuation-to-Crosstalk Ratio from the Far end (PS AACR-F) for each wire pair in a disturbed channel or permanent link is obtained by the power sum addition of all the normalized pair-to-pair far end alien crosstalk results to that wire pair from all wire pairs in disturbing links in close proximity.

14. Minimum test results documentation (summary results): Identify the wire pair that exhibits the worst-case margin and the wire pair that exhibits the worst value for PS AACR-F. if the link or channel connects two patch panels (data center), these wire pairs must be identified for the tests performed from both ends. Each reported case shall include the frequency at which it occurs as well as the test limit value at this frequency.

C. Category 6 Test Result Documentation

1. The test results/measurements shall be transferred into a Windows™-based database utility that allows for the maintenance, inspection and archiving of these test records. A guarantee must be made that the measurement results are transferred to the PC unaltered, i.e., “as saved in the tester” at the end of each test and that these results cannot be modified at a later time.

2. The database for the completed job shall be stored and delivered on CD-ROM including the software tools required to view, inspect, and print any selection of test reports.

3. A paper copy of the test results shall be provided that lists all the links that have been tested with the following summary information

    a. The identification of the link in accordance with the naming convention defined in the overall system documentation

    b. The overall Pass/Fail evaluation of the link-under-test including the NEXT Headroom (overall worst case) number

    c. The date and time the test results were saved in the memory of the tester.

4. General Information to be provided in the electronic data base with the test results information for each link:

    a. The identification of the customer site as specified by the end-user

    b. The identification of the link in accordance with the naming convention

defined in the overall system documentation

c. The overall Pass/Fail evaluation of the link-under-test

d. The name of the standard selected to execute the stored test results

e. The cable type and the value of NVP used for length calculations

f. The date and time the test results were saved in the memory of the tester

g. The brand name, model and serial number of the tester

h. The identification of the tester interface

i. The revision of the tester software and the revision of the test standards database in the tester

j. The test results information must contain information on each of the required test parameters that are listed in Section B and as further detailed below under paragraph C6.

5. In-link (In-Channel) detailed test results. The detailed test results data to be provided in the electronic database for must contain the following information:

a. For each of the frequency-dependent test parameters, the value measured at every frequency during the test is stored. The PC-resident database program must be able to process the stored results to display and print a color graph of the measured parameters. The PC-resident software must also provide a summary numeric format in which some critical information is provided numerically as defined by the summary results (minimum numeric test results documentation) as outlined above for each of the test parameters.

b. Length: Identify the wire-pair with the shortest electrical length, the value of the length rounded to the nearest 0.1 m and the test limit value

c. Propagation delay: Identify the pair with the shortest propagation delay, the value measured in nanoseconds (ns) and the test limit value

d. Delay Skew: Identify the pair with the largest value for delay skew, the value calculated in nanoseconds (ns) and the test limit value

e. Insertion Loss (Attenuation): Minimum test results documentation as explained in Section B for the worst pair

f. Return Loss: Minimum test results documentation as explained in Section B for the worst pair as measured from each end of the link

g. NEXT, ELFEXT: Minimum test results documentation as explained in Section B for the worst pair combination as measured from each end of the link

h. PSNEXT and PSELFEXT: Minimum test results documentation as explained in Section B for the worst pair as measured from each end of

the link

6. Between-Link (Between-Channel) Test Results Data. A test report shall be provided for each disturbed link included in the Alien Crosstalk sample test. This test report must contain

7. PS ANEXT results at each frequency (See Table 1) for each wire pair in a victim link as well as the PS ANEXT results for the average of these four wire pairs. The worst case margin and the worst values shall be provided for each wire pair and the average of the four wire pairs. PSANEXT shall be measured and tested from the end of the link or channel where all cables are terminated at a distribution panel. In case the cabling runs from panel to panel (data center), the PS ANEXT test results for each disturbed link shall be collected and saved from both ends (both panels) of the disturbed link.

8. PS AACR-F results at each frequency tested (See Table 1) for each wire pair in a disturbed link as well as the PS AACR-F results for the average of the four wire pairs. The worst case margin and the worst values shall be provided for each wire pair and the average of the four wire pairs. PS AACRF only needs to be measured and tested from one end of the link or channel. Connect the main DTX-1800 unit (measurement of PS AACR-F disturbance) to the disturbed link or channel at the end where all cabling links are terminated at a distribution panel. Select End 1 in the AxTalk Analyzer Software.

D. Optical Fiber Cable Testing: All fiber testing shall be performed on all fibers in the completed end to end system. There shall be no splices unless clearly defined in Section 3 of this specification. Testing shall consist of a bi-directional end to end OTDR trace performed per ANSI/TIA/EIA 455-61 & ANSI/TIA/EIA 526 and a bi-directional end to end power meter test performed per ANSI/TIA/EIA 455-53A. The system loss measurements shall be provided at 850 and 1300 nanometers for multimode fibers and 1310 and 1550 for single mode fibers.

1. Pre-installation cable testing: The Contractor shall test all lightguide cable prior to the installation of the cable. The Contractor shall assume all liability for the replacement of the cable should it be found defective during the warranty period.

2. Loss Budget: Fiber links shall have a maximum loss of: (allowable cable loss per km)(km of fiber in link) + (.4dB)(number of connectors) = maximum allowable loss.

3. Any link not meeting the requirements of the standard shall be brought into compliance by the contractor, at no charge to Owner.

E. HD-SDI coax cable testing

1. 12G HD-SDI – Adhear to SMPTE OV2082-0.2018 Standards.

2. 11.88 Ghz Support.

F. The Contractor shall provide test documentation to the Owner's Project manager in a three ring binder(s) and CD format within three weeks after the completion of a specific project. The binder(s) shall be clearly marked on the outside front cover and spine with the words "Test Results", the project name, and the date of completion (month and year). The binder shall be divided by test type. Test data within each section shall be presented in the sequence listed in the administration records. The test equipment by name,

manufacturer, model number, and last calibration date shall also be provided at the end of the document. Unless a more frequent calibration cycle is specified by the manufacturer, an annual calibration cycle is anticipated on all test equipment used for this installation. The test document shall detail the test method used and the specific settings of the equipment during the test.

G. When repairs and re-tests are performed, the problem found and corrective action taken shall be noted, and both the failed and passed test data shall be collocated in the binder.

3.8 FINAL INSPECTION AND ACCEPTANCE

A. After all requirements of the Specifications and/or the Drawings have been fully completed, representatives of the Owner will inspect the work. Contractor shall provide competent personnel to demonstrate the operation of any item or system to the full satisfaction of each representative.

B. Final acceptance of the work will be made by the Owner after receipt of approval and recommendation of acceptance from each representative.

C. Upon testing by Owner's Representative (Consultant) any deficiencies shall be noted. If the deficiencies are not correctable at the time of testing, any retesting costs by the Consultant, including any travel and lodging expenses shall be borne solely by the Contractor.

3.9 ACCEPTANCE TESTS

A. Qualification for Acceptance: After completing preliminary testing, the Contractor shall furnish the Construction Manager with the letter/report documenting the results of the preliminary tests and two (2) copies of "as-built" wiring diagrams of the entire system including the connection numbers, and their locations. The receipt of this documentation shall constitute the Contractor's acknowledgment that the installation is complete and conforms to this specification and is ready to be reviewed and tested by the AV Design Consultant.

B. Acceptance Test: The Consultant, Owner's Representative and/or Construction Manager will be present during the acceptance testing and require the assistance and cooperation of the Contractor. Provide personnel who participated in the actual installation and preliminary testing and adjustment of the audiovisual systems.

C. Equipment cabinet keys and any tamper-proof fastener tools must be available to the AV Design Consultant. Delays associated with failure to access the equipment shall be back-charged to the Contractor at the AV Design Consultant's current hourly rates.

D. Each major component shall be demonstrated to function, as specified.

E. The Contractor shall provide a laptop with all manufacturer supplied configuration software necessary for communicating with DSP Audio Matrix Mixers, and the Modular Audiovisual Switchers. A review of system settings may be required for either of the programmable units at the AV Design Consultant's request, and settings may be adjusted if necessary.

F. Such tests may be performed on any piece of equipment or system. If any test shows the equipment or system is defective or does not comply with the specifications, the

Contractor shall perform any remedies at his expense and pay the subsequent expenses of any retesting required.

G. Delays: If system acceptance is delayed because the system is found to not meet the specification requirements, the Contractor shall reimburse the Owner for all consultant expenses related to re-testing. This shall include costs associated with travel to the site and any associated business travel expenses.

3.10 SYSTEM DOCUMENTATION, TRAINING, AND FIELD SUPPORT

A. Operation and Maintenance Manuals: For each system, provide three (4) copies of system manuals per system, three (3) for the Owner and one (1) for the AV Design Consultant. Manuals shall be in adequately sized three-ring binders, clearly labeled on spine. Manuals shall contain the following:

B. Service Reference Cover Sheet: Provide a cover sheet with Contractor name, address, Email, WEB Address, telephone and Fax numbers.

C. System Operation Instructions: Step-by-step operating instructions for the basic day-to-day use of the system including power activation, connection of source devices, adjustment of volume levels, selection of sources, etc. Include illustrations and references to individual equipment manuals as necessary.

D. Equipment Manuals: Include copies of individual equipment operation manuals separated by tabbed dividers. Order THE manuals in nominal signal path order (i.e. sources first, amplifiers/loudspeakers last), followed by control system manuals, followed by miscellaneous manuals.

E. Equipment List: List all system equipment including, connectors and specialty hardware, by manufacturer and model and serial number.

1. As-built Drawings: Provide one set, reduced 11”x17” foldout "as built" functional diagrams in clear plastic binder sleeves. Fold and insert drawings so that drawing title is clearly visible at the front of the sleeve. In addition, provide 2 full-size drawing sets.

2. Provide software programmable device configuration files to the Owner for all control system interfaces and computer-based files, and the DSP Audio Matrix Mixer. Store files on site in the system documentation binders in disk sleeves. Provide the files on USB.

3. Complete spreadsheet lists of IP network devices, protocols used, and IP and MAC Address lists and required ranges for coordination with the Owner's IT department.

F. Lists shall include information regarding location on the Owner's network or dedicated audiovisual physical subnet, VPN requirements, and other pertinent information for integration of IP networked audiovisual equipment into the Owner's Enterprise network

G. Training: Provide hours as needed of system training to operator(s) designated by the Owner. Training time is to be non-contiguous, in multiple separate sessions. Training sessions are to be digitally recorded upon Owner request.

H. All training shall take place after the systems are operational, but before the acceptance

tests.

I. Operational Training:

1. In the event the Installing Contractor does not have qualified instructors on staff for certain sophisticated equipment, the Installing Contractor, at no additional cost to Owner, shall provide a manufacturer's representative for such instruction to the Owner.

J. Training Materials Supplied:

1. System operational manual (not equipment operation manuals) that explains how to fully operate the system; from start-up to shut-down, and all operational steps in-between, in a step by step description, with pictures and other visuals to help convey information.

2. The Installing Contractor shall video record training session(s) for Owners reference (to help limit minor follow up phone calls in the future).

K. Maintenance Training:

1. A session with Owner's designated technical personnel for routine and preventive maintenance shall be given.

a. This training is for scheduled preventative maintenance for such items as filter and lens cleaning, minor equipment checks and "user" adjustments.

1) This training is not meant to teach Owner's representatives how to use commercial test equipment and/or do sophisticated equipment/system alignment.

L. Training Materials Supplied:

1. Utilizing the equipment manuals and flow diagrams of the required in contract closeout submittals supply a listing with suggested preventative maintenance schedule of the system equipment.

2. Training Format

a. Presenter: The presenter of the training sessions to have been directly involved with the project and have intimate knowledge of the installed systems and its operation. The presenter to be experience operating similar systems of similar complexity.

b. Attendees: The End User to determine who shall attend Audio & Video Training. Group to be limited to 10 persons. Training to occur at building site and be coordinate with Owner's Schedule and Calendar.

c. Classroom presentation: PowerPoint Presentation covering items indicated in syllabus. Duration of classroom training not to exceed 4 hours.

M. Field Instruction: Hands On presentation covering items indicated in syllabus. Minimum duration of field instruction:

1. Video System Operation – 4 hours

2. Audio System Operation – 4 hours

3. One month follow up – 4 hours

N. Audio Systems Training Syllabus

1. Section 1 - Introduction to Audio Systems

   a. Decibels – Explain the concept of Decibels and its application in dBu and dBSPL. Provide references of each.

   b. Frequency – Explain the concept of Frequencies and a relationship to octaves and musical notes.

   c. Voltage – Provide description of microphone, line and speaker levels.

   d. Gain Structure – Provide description and example of proper gain structure along with an explanation of clipping and headroom.

2. Section 2 – Introduction to Project Systems (Provide the following for each system in project)

   a. Inputs – Present floor plans indicating location of technical panels with brief description of input connectors

   b. Controls – Present floor plans indicating location of wall controls and mix locations.

   c. Review the setup and adjustment of the output devices.

   d. Review the maintenance of the video equipment.

3. Section 3 – Microphone Selection and Application

   a. Provide explanation of proper microphone selection to include:

      1) Type of microphone: Boundary, Condenser, Dynamic, etc.
      2) Type of coverage: Omni, Cardioid, Semi Cardioid, etc.

   b. Provide explanation of proper microphone application to include:

      1) General Handling and placement for handheld applications
      2) General Handling and placement for stand applications
      3) 3 to 1 rule with respect to interference
      4) 3 dB rule with respect to headroom

4. Section 4 – Field Instruction

   a. Mixing Console Operation

   b. Explanation of signal path

   c. Review of Aux sends

d. Review of Groups

e. Explanation of Mute Groups

f. Explanation of Matrix

g. Review of Main Section

h. Review of Metering

i. Tie Line Description

O. Video System Training Syllabus

1. Section 1 – Introduction to Video Systems

a. Provide description of digital and analog video signal types

b. Discuss the properties of a quality video image

2. Section 2 – Introduction to project systems

a. Inputs – Present floor plans indicating location of technical panels with description of input connectors.

b. Controls – Present floor plans indicating location of wall controls and mix locations.

c. Components – Present Schematic diagram (based on shop drawings) indicating description of signal flow and components of the system.

3. Section 3 – Field Instruction

a. Demonstrate the process of inputting media

b. Review the process or routing the signals through distribution

c. Review the setup and adjustment of the output devices.

d. Review the maintenance of the video equipment.

P. Support Materials

1. Training Manuals - Provide three ring binders for each attendee with the following:

a. Cover sheet indicating Audio Training

b. Contact information for Audio Contractor and Audio Consultant

c. Table of Contents

d. Printed copy of PowerPoint presentation

e. Copy of Materials List

f. Copy of Loose Equipment Materials List and Product Cut Sheets

g. Owners and Instruction Manuals. Make Owners and Instruction manuals available and complete for reference during training.

h. Record Documents Make Record Document available and complete for reference during training.

i. Submit training support material binder to AV Consultant for approval prior to training sessions

Q. Follow-up training within sixty (60) days shall also be provided.

R. Single Point of Contact: Contractor shall provide an English proficient, single point of contact, i.e., Project Manager, to speak for the Contractor and to provide the following functions:

S. Initiate and coordinate tasks with Owner's Project Manager, and others as specified by Owner's Project Manager.

T. Provide day-to-day direction and on-site supervision of Contractor personnel.

U. Ensure conformance with all Contract provisions.

V. Participate in weekly site project meetings as needed.

W. This individual shall remain as Project Manager for the duration of the project. The Contractor may change Project Managers only with the Owner's Project Manager's written approval.

X. Planning meetings and schedule: Within thirty (30) calendar days after the date of award of the Contract, an initial planning meeting shall be held with the successful bidder to clarify all requirements (systems, services, distribution methods, etc.), identify responsibilities, and schedule the events that shall transpire during the implementation of the project. Within one (1) week of this initial meeting, the Contractor shall provide a written report and project schedule to clearly document the events and responsibilities associated with the project.

Y. Site Cleaning: Throughout the progress of the plant construction, the Contractor shall keep the working area free from debris of all types and remove from the premises all rubbish resulting from any work done by Contractor. On a daily basis and at the completion of its work, the Contractor shall, to the extent possible, leave the premises in a clean and finished condition.

Z. Safety Requirements: Contractor shall utilize appropriate personnel and display warning signs, signals, flags and/or barricades at the work site to ensure adherence to safety regulations and as prudence requires.

AA. Specification/Drawing Status: All specifications and drawings related to this project shall be "frozen" after shop drawing approval. The Owner reserves the right to negotiate any future changes with the Contractor at any time.

BB. Upon approval of shop drawings, Contractor shall immediately place orders for all required materials, components, and supplies. In addition, Contractor shall secure and forward written confirmations (including orders and shipping dates) direct from each

manufacturer/vendor to the Owner's Project Manager.

CC. Contractor shall expedite shipment of all materials, components and supplies, as necessary to ensure the successful completion of the Project by the date required. All costs for expediting shall be included within Contractor's pricing as provided below.

DD. The system cost herein shall include administration/maintenance training for at least ten Owner's representatives with a minimum allotment of sixteen (16) hours. Additional hours of training shall be as required at no additional expense to the owner. All training shall include written and/or video materials that shall remain the property of Owner. If materials are written, they shall be provided in quantities sufficient for each person trained; if materials are video, one copy of each shall be required. The administration/maintenance training shall include, but not be limited to, the following:

EE. Review of as-built documentation, including a site demonstration.

FF. All warranty information.

3.11 DAMAGES

A. The Contractor shall be held responsible for any and all damages to portions of the building caused by it, its employees or sub-contractors; including but not limited to:

B. Damage to any portion of the building caused by the movement of tools, materials or equipment.

C. Damage to any component of the construction of spaces.

D. Damage to the electrical, mechanical and/or life safety or other systems caused by inappropriate operation or connections made by the Contractor or other actions of Contractor.

E. Damage to the materials, tools and / or equipment of the Owner, its consultants, agents and tenants.

3.12 INSPECTIONS

A. On-going inspections shall be performed during construction by the Owner's Project Manager. All work shall be performed in a high-quality manner and the overall appearance shall be clean, neat and orderly. The following points will be examined and must be satisfactorily complied with:

B. Are all cables properly labeled, from end-to-end?

C. Have all terminated cables been properly tested in accordance with the specifications for the specific category as well as tested for opens, shorts, polarity reversals, transposition and presence of AC and/or DC voltage?

D. Have the pathway guidelines been followed? Are all cable penetrations installed properly and fire stopped according to code?

E. Has the Contractor avoided excessive cable bending?

F. Is Cable fill correct?

G. Are terminations compatible with applications equipment?

H. Are connectors properly turned right side up in the Jack Panels or faceplates without cables wrapped or twisted?

I. Is the jacket maintained right up to the termination?

J. Are identification markings uniform, permanent and readable?

3.13 COMPLETION OF WORK

A. At the completion of the System, the Contractor shall restore to its former condition, all aspects of the project site and on a daily basis, shall remove all waste and excess materials, rubbish debris, tools and equipment resulting from or used in the services provided under this Contract. All clean up, restoration, and removal noted above shall be by the Contractor and at no cost to Owner. If the Contractor fails in its duties under this paragraph, Owner may upon notice to the Contractor perform the necessary clean up and deduct the costs thereof from any amounts due or to become due to the Contractor. It shall be the Contractor's responsibility to remove trash from the areas it is working in and bring trash and debris to the Contractor provided dumpster.

B. Final Punch Walk: The Contractor and owner shall complete a final inspection to determinate if all conditions of the scope of work are completed to the owner's satisfaction. A "punch list" shall be formulated within (2) days of the punch walk and be presented to the Contractor for completion prior to final project sign-off by the owner. If an item is missed during the punch walk or not included on the "punch list" for any reason, it does not release the Contractor from completing the scope of work as defined in the specification or drawings.

C. Contractor shall submit complete Record Documentation as outlined in submittals section prior to project sign-off by owner.

3.14 SYSTEM AND/OR NETWORK TESTING

A. Upon completion of installation, Contractor shall execute all of the required tests as summarized in this specification. When all such tests have been completed to Owner's satisfaction and Manufacturer's specifications, Contractor shall give the Owner written notice thereof.

B. Contractor must assume responsibility of assuring that the system and network interface installed operates properly, including any required coordination with other suppliers.

3.15 FINAL ACCEPTANCE

A. The Owner or Owner's representative may visit the site during the installation of the system to ensure that correct installation practices are being followed.

B. The Owner or Owner's representative will conduct a final job review once the Contractor has finished the job. This review will take place within one week after the Contractor notifies the owner.

C. Two copies of all certification data and drawings for all identifications shall be provided to the Owner before the owner's review.

D. The Owner or Owner's representative will review the installation and certification data prior to the system acceptance.

E. The Owner or Owner's representative may test some of the systems features to ensure that the certification data is correct. If a substantial discrepancy is found, the Owner reserves the right to have an independent consultant perform a certification of the entire system. If such a procedure is undertaken, the cost of the testing shall be billed back to the Contractor.

F. In the event that repairs or adjustments are necessary, the Contractor shall make these repairs at his own expense. All repairs shall be completed within 5 days from the time they are discovered.

G. The Contractor shall hand to the owner a copy of any applicable installation specific software configurations in USB format.

END OF SECTION

SECTION 27 50 00 - PUBLIC ADDRESS AND PAGING BID SPECIFICATION

PART 1 - GENERAL

1.1 DESCRIPTION

A. The Contractor shall furnish and install all equipment including, but not limited to, outlet boxes, wiring, speakers, and all other necessary equipment to provide a complete operating system as indicated with the contract documents. Provide all necessary wall plates, specialty boxes, etc., not provided by others.

B. Class Connection™ ES with revision 5 or higher firmware, shall be considered as meeting all specifications and as the base bid. The specifying authority must approve alternate systems. Bidders proposing alternate systems shall provide all relative descriptive information, including catalog cuts, shop and working drawings, data sheets along with a demonstration of the proposed system. This information must be presented to the relative parties as to allow sufficient time to review all material. This should be accomplished at least 10 (ten) days prior to the bid date.

C. The intent of this specification is to maximize communications between the classroom and administrative areas while enhancing school safety and reducing maintenance and operational cost.

D. Under this specification, the system shall provide an expansion of the existing Communication System for the Aquatics buildings.

E. The Communication System shall provide distribution of intercom, overhead paging, emergency paging, class change time tones, emergency tones, program material and prerecorded WAV files for emergency messaging.

1.2 RESPONSIBILITIES

A. Contract documents are detailed only to the extent required to show design intent. It shall be understood and agreed upon by the Contractor that all work described herein shall be complete in every detail.

B. Furnish additional items not mentioned herein to meet requirements as specified without claim for additional payments. Items may include hardware, rack panels, appropriate connection blocks, and all other parts that are required for installation.

C. Labor furnished shall be trained and experienced in telecommunication systems.

D. All equipment unless otherwise specified, shall be new, free from defects, and the best craftsmanship in its class.

E. All manufactured equipment shall be installed as recommended by the manufacturers, or as indicated in their published installation manual.

F. Furnish and install necessary equipment, back boxes, supports and enclosures.

G. Furnish and install all necessary wire.

H. Furnish shop drawings.

I. Perform final programming of system and audio level adjustments.

J. Provide system documentation including equipment manuals and drawings.

K. Guarantee all equipment and components for their specified period from date of acceptance.

L. Provide information on system requirements to any Contractor responsible for supplying related materials for this system.

1.3 SUBMITTALS

A. Submit layout drawings of the communication system and all components. Submit drawings of control equipment showing all major components and positions in the rack.

B. Provide block diagrams showing components and relative connections.

C. Submit a certificate showing completion of installation, programming, and service training from the system manufacturer.

D. Submit data sheets on equipment provided.

1.4 QUALIFICATIONS

A. The Contractor shall be from an established and local company providing solutions to the school market for a minimum of 3 (three) years with Telecom/Data/Sound experience and shall have factory trained technicians on staff.

B. The Contractor shall maintain an adequate parts inventory to perform necessary service and upgrades.

1.5 MAINTENANCE

A. The Contractor shall provide a 12 (twelve)-month guarantee of the installed system against defects in material and workmanship. All warranty material shall be provided at no expense to the Owner. Guarantee period shall begin on the date of acceptance by the Owner or Engineers.

1.6 PLEDGE OF QUALITY

A. The Contractor shall be an authorized integrator for the supplied equipment with full warranty privileges.

B. The Contractor must have attended the proposed equipment Manufacturer’s Training Program.

C. The Contractor shall inventory the necessary parts in order to maintain and service the equipment being supplied. This equipment inventory level shall be in direct proportion to total systems installed as recommended by the manufacturer.

D. The Contractor shall provide complete drawings detailing all interconnections, panel wiring diagrams, and specification sheets.

1.7 IN-SERVICE TRAINING

A. The Contractor shall furnish in-service training with the system. The sessions shall facilitate the training of personnel in operating classroom equipment, administrative equipment, program distribution, and user programming functions. System specific customized user manuals shall be provided at the time of training.

1.8 WIRING

A. Wiring shall be in accordance with the Manufacturer's specifications. Wiring shall meet all local and state codes. All wiring shall be ground and short tested.

1.9 COMMUNICATION SYSTEM

A. The Communication System shall provide at least the following functions and features:

1. Direct dialed, hands-free, two-way communication from all administrative telephones to any location equipped with a talkback speaker.

2. Automatic gain control on intercom speech to assure constant talkback speech level.

3. Capable of handling at least 720 I/O points (seven hundred twenty). A point is defined as a call-in switch or a speaker output.

4. System shall be modular in design and capable of expanding in increments of 48 points allowing for budget flexibility and expandability.

5. The system shall be connected to a switched, multicast enabled network meeting the manufacturer's published guidelines. This connection shall be via a standard Ethernet RJ-45 jack and shall provide network access to all system programming and administration.

6. System shall interface with any telephone system, thus allowing the school(s) to upgrade or replace their telephone system without suffering a requirement to replace, or lose any feature of, their internal communications (intercom) system. Any system that limits system features based upon any selected telephone system, and/or is proprietary to one or only a few telephone systems shall not be acceptable.

7. Session Initiation Protocol access shall be easily facilitated through the addition of one device. To ensure compatibility, this device shall be available from the same manufacturer as the proposed system.

8. System shall automatically sound a tone or play a pre-page WAV file over any loudspeaker connected for two-way communication to alert the classroom teacher that this two-way call has been established. This is intended to prevent unauthorized monitoring. A privacy tone must repeat every 15 (fifteen) seconds.

9. System shall provide the distribution of emergency announcement(s) from any authorized telephone to all areas furnished with a loudspeaker. Emergency announcements shall have the highest system priority.

10. System shall provide the distribution of general announcements from any administrative telephone, staff telephone, or classroom telephone. The system shall be capable of providing all-call, group calls, multiple group call, or dial-on-the-fly page groups.

11. System shall provide the distribution of emergency announcements from a high priority microphone.

12. Classroom speakers shall be assignable to a minimum of 72 (seventy-two) audio paging/distribution groups.

13. System shall provide the ability to define at least 16-time tone schedules with a minimum of 255 events per schedule. Each scheduled event shall be capable of controlling WAV file distribution; user selected custom audio/voice phrases, audio from auxiliary sources or a relay for building control. Each scheduled audio event shall be distributable to at least 72 audio groups. The system shall feature the ability to automatically simultaneously operate 8 or more schedules per day, based upon the day of the week or calendar dates up to one year in advance. Schedule administration, modification and creation functions must be available through designated administration computers. Systems that do not allow the school to manage their own schedules via computer or do not offer calendar-based scheduling up to one year in advance or require separate page and time groups shall not be acceptable.

14. Provide a minimum of a 4-digit numbering plan, thus allowing the classroom speaker and the classroom telephone to be the same architectural number.

15. Any classroom/area loudspeaker must have the flexibility to be programmed as a testing room. A testing room shall be excluded from receiving general announcements, class change tones, group announcements and program material. The testing room must receive emergency tones and announcements. The testing rooms may be reactivated to normal operation at any time by the administration staff as needed. As an option, testing rooms shall feature the ability to automatically reset to normal operation before start of class the next day.

16. Customized programming shall be stored in non-volatile memory and shall not be lost due to power failures.

17. Classroom initiated intercom calls must be assignable to ring at specific administrative ports. These administrative ports shall have the flexibility to be forwarded to other administrative ports should a call go unanswered or should the assigned administrative port be busy.

18. System must feature facilities to annunciate incoming intercom calls at multiple administrative phones simultaneously. Once answered, the call will automatically be cancelled for other administrative phones.

19. System functionality must include the capability to manually distribute 60+ custom audio files via pushbuttons, contact closure, or dial code from administrative telephones. The tones shall be fully customizable.

20. The system must provide a minimum of 4 (four) ports to be connected to the telephone system from the intercom system. These 4 (four) intercom lines shall provide built-in Enhanced Caller Line Identification which will visually announce the name of the teacher or location and the classroom dial intercom code, and call priority level; thus allowing interface to any telephone system. Systems that require integration to a specific telephone system or systems in order to offer this feature shall not be acceptable.

21. The system shall have the ability to control relays. Relays shall be controlled through administrative computers, DTMF controlled or automatically cycle on and off by schedules. All relays must be programmable with the flexibility to change as required. A minimum of eight (8) relays shall be provided.

22. The system shall provide at least three simultaneously operating, non-restrictive program distribution channels. The audio program material shall be controlled and distributed through the administration computer thus allowing simple and easy changes. Systems that require manual operated switch-banks or cumbersome DTMF telephone codes for distribution shall not be acceptable

23. The system shall have the ability to store a minimum of 60 minutes of WAV files in a non-volatile manner.

24. WAV files distribution shall feature programmable priority levels. They shall be programmable as to override any class change tones, normal all call, music, and intercom in the event of an emergency.

25. The WAV files shall have the ability to be broadcast into any one or all of the audio groups within the system.

26. The WAV files shall have the ability to be broadcast via a schedule for any day of the week or time of the day. They shall have the ability to broadcast for any duration of time and/or repeat.

27. The WAV files shall be able to be broadcast via a pushbutton selecting which WAV file is broadcast, the priority level, where it is broadcast, and how many times it shall play.

28. The WAV files shall have the ability to be utilized as class change tones within the system. These files shall be able to replace any tone within the class change schedules as to offer the flexibility of customizable tones and or phrases in this class change mode.

PART 2 - PRODUCTS

2.1 INTERCOM CONTROL UNIT

A. Shall be capable of expanding to a minimum of 720 (seven hundred twenty) points. A point is defined as a call-in switch or speaker output.

B. Provide pre-alert tone to classroom for intercom calls and general announcements.

C. System shall provide the ability to program and control the built-in scheduler with unlimited events and unlimited time schedules with multiple audio groups.

D. System shall provide the ability to control wireless or wired clocks (various correction methods).

E. System shall provide the ability to produce user defined tone signals for time tones or emergency tones.

F. System shall provide the ability to select the tone on an all call basis from any, or selected, administrative telephones.

G. Provide an Ethernet port, which will give ability to monitor operations and functions of the systems.

H. Provide off-site programming and diagnostics of the system. It shall also be capable of determining basic circuit faults.

I. The system shall be capable of simultaneous conversations between administrative ports.

J. System shall provide calendar-based scheduling up to one year in advance.

K. The system shall be programmable via Ethernet connection.

L. System shall be capable of utilizing 45 (forty-five) ohm, IP based or 25-volt speakers for classroom type speakers.

M. Retrofit applications shall, where possible, reuse existing 25-volt speakers, call buttons and existing cabling. Substandard or defective speakers, call buttons and cabling shall be replaced on a per need basis.

N. New system speakers shall be capable of utilizing UTP data wiring for installation, thus allowing for only one type of wiring infrastructure within the school. New systems that require infrastructure sized greater than 24 AWG shall not be acceptable.

O. Provide a minimum of 8 (eight) unrestricted simultaneous audio paths for communication between administrative phones, program material, time tone distribution, and paging. Systems that do not allow simultaneous pages to different paging groups will not be accepted.

P. Provide a minimum of 6 (six) programmable pushbutton inputs that can be used to activate tones or distribute program material.

Q. Provide a minimum of 8 (eight) programmable output contact closures which can be activated manually to turn on cameras, unlock doors, emergency lockdown, etc., or automatically based upon one or more schedules.

R. Provide a call confirmation tone at speaker when an intercom call is placed. This verifies that the call has been placed in queue.

S. Provide emergency voice messaging via the following methods:

1. Any authorized PC on the school's LAN/WAN

2. Any authorized telephone

3. Any pushbutton

T. System must have the capability to tie to a WAN to provide district wide all call paging as well as multi-building paging for the purposes of mass notification. Access to individual rooms for intercom purposes via the WAN must also be supported.

2.2 MASTER CLOCK

A. The intercom system shall provide a time base for the system secondary clocks. Systems requiring a separate master clock with a separate software package will not be accepted.

B. The intercom system shall have the ability to synchronize both analog and digital secondary clocks.

2.3 SPEAKERS/CALL SWITCHES

A. Ceiling speakers shall be 2'x2' Lay in style and shall consist of a white perforated grille, a speaker and integral backbox. The speaker cone shall be 8" in Diameter and have a minimum 5 oz. magnet: The voice coil diameter shall be a minimum of ¾" and an impedance of 45 Ohms. The speaker shall produce a sound pressure level of 95 dB at 1 meter on axis with 1 watt applied. Frequency response shall be 80Hz to 15 KHz. The baffle shall be constructed with a single piece of perforated steel with a white baked on acrylic enamel finish. The baffle shall be constructed with a single piece of perforated steel with a white baked on acrylic enamel finish. The backbox meets or exceeds A.S.T.M. E84 flame and smoke test and has a three-hour burn rating (UL181). Four seismic tabs provided for additional mounting integrity.

B. Wall speakers, including those within clock/speaker units, shall be 8" in Diameter and have a minimum 5 oz. magnet: The Voice coil diameter shall be a minimum of ¾" and an impedance of 45 Ohms. The speaker shall produce a sound pressure level of 95 dB at 1 meter on axis with 1 watt applied. Frequency response shall be 80Hz to 15 KHz.

C. Rooms requiring volume control of speakers shall have provisions for volume adjustment as part of the call switch assembly.

2.4 WIRING

A. All wiring shall be listed for the intended purpose. The intercom shall use UTP listed cable.

B. All interior wiring shall be in accordance with new construction guidelines suggested by the Manufacturer; including the speaker and the call-in switch.

2.5 INSTALLATION

A. Complete system shall be installed in accordance with Manufacturer's recommendations.

B. All wiring shall be installed in raceways or plenum rated cable where routed in plenum ceiling areas.

2.6 PROTECTION

A. The contractor shall note in his system drawings, the type of protection devices and all relative information.

B. The contractor shall provide all necessary protection on the AC power feed and on all station lines leaving/entering the building.

PART 3 - EXECUTION (Not Applicable)

END OF SECTION

SECTION 28 16 00 - INTRUSION ALARM SYSTEM

PART 1 - GENERAL

1.1 SCOPE OF WORK

A. The work under this section includes all final design, all labor, material, equipment, supplies, labor, testing, and accessories required to furnish and install a complete Intrusion Detection / Burglar Alarm System (referred to as intrusion alarm) as indicated on the drawings and as specified herein.

B. It is the intent of the Drawings and Specifications for the Contractor to design, provide and install a complete, fully operational, and tested system.

C. All miscellaneous system components including, but not limited to, cables, termination equipment, punch blocks, patch panels, backboards, and any other related items shall be furnished and installed complete under this section. All miscellaneous items and accessories required for such installation, whether or not each such item or accessory is shown on the plans or mentioned in these specifications.

D. It shall be the responsibility of each Bidder to examine the plans and specifications carefully before submitting his bid. Any questions or discrepancies discovered shall be brought to the attention of the Architect/Engineer, prior to bid, and resolved by way of addendum.

E. All materials, equipment and apparatus provided shall be new and of the latest design or model offered for sale by the manufacturer.

1.2 RELATED WORK

A. Documents affecting work of this section include, but are not necessarily limited to, General Conditions, Supplementary Conditions and sections of Divisions 1 and 26 of these specifications.

B. All applicable portions of Section 26 10 00 and Section 27 10 00 shall apply to this section as though written herein completely.

1.3 GENERAL REQUIREMENTS

A. Equipment

1. The District Standard for Intrusion Detection Equipment is Digital Monitoring Products (DMP).

2. All equipment shall conform to applicable codes and local ordinances.

3. All equipment shall bear the label of a Nationally Recognized Testing Laboratory (NRTL) such as Intertek Testing Services NA, Inc. (ITSNA - formerly ETL) or Underwriters Laboratories Inc. (UL) and be listed by their

re-examination service.

B. Contractor: The term “Contractor” shall be defined as the company, or group of companies, that actually provides the products per Section 2 and installs the products per Section 3 of this document. The Contractor selected to provide the installation of this system shall be certified by the manufacturer in all aspects of design, installation and testing of the products described herein.

1. The Contractor shall hold a valid State of California C-7 Low-Voltage, and a valid Department of Consumer Affairs Bureau of Security and Investigative Services (BSIS) “Alarm Company Operator’s” License. The Contractor shall have completed at least twenty (20) projects of equal scope, shall have been in business of furnishing and installing systems of this scope and magnitude for at least five (5) years, and capable of being bonded to assure the Owner of performance and satisfactory service during the guarantee period.

2. All work shall be performed under the supervision of a company accredited and trained by the manufacturer and such accreditation must be presented with the bid submittal. Contractor must be accredited a minimum of 180 days prior to bid submittal date.

3. The Contractor shall be a manufacturer’s Authorized Installer and Warranty Station for the equipment offered and shall maintain a fully equipped service organization capable of furnishing adequate repair service to the equipment.

4. The Contractor selected for this Project shall adhere to the engineering, installation and testing procedures and utilize the authorized manufacturer components and distribution channels in provisioning this Project.

5. The Contractor shall hold all other licenses required by the legally constituted authorities having jurisdiction (AHJ) over the work.

6. The Contractor shall maintain and provide appropriate liability and worker’s compensation insurance coverage.

1.4 PRODUCT SUBSTITUTION / EQUAL

A. District standard for intrusion alarm system is DMP. Substitutions are not permitted.

1.5 PRE-AWARD SUBMITTAL REQUIREMENT

A. In the Contractor’s bid package, the Contractor shall submit all items required in Division 1 of the bid package.

1.6 PRE-INSTALLATION SUBMITTAL REQUIREMENTS

A. Within fifteen (15) calendar days after the date of award of the Contract, the Contractor shall submit the following:

1. Submittal Binder: Submit one (1) digital electronic copy of the complete Submittal package for review. The binder shall consist of five (5) major sections.

a. The FIRST section shall include a COVER SHEET on the Contractors Company letter head including, Contractor's name, Contractor's license number, Project name, Specification number and description, Date documentation was submitted.

b. The SECOND section shall include the Bill of Materials spreadsheet with a full material list of products and equipment included in the Contractor's bid price. This spreadsheet shall provide columns with the following information, manufacturer's name, part number, short description, quantity to be installed, corresponding specification subsection or drawing sheet number where product is referenced.

c. The THIRD section shall include manufacturer cut sheets for all listed in the Contractor's Bill of Materials spreadsheet. The cut sheets shall be placed in the same order and listed on the spreadsheet. Cut sheets shall represent the latest version, part number, and revision of the product. Where multiple products or part numbers appear on a page, a bold arrow or circle shall indicate which product or part numbers are to be used as part of the installation.

d. The FORTH section shall include the following items:

1) A copy of the low voltage Contractor's valid State of California C-7 Low-Voltage license and BSIS alarm company license.
2) Proof (written documentation) that the low voltage Contractor has been regularly engaged in the business of low voltage contracting consisting of, but not limited to, engineering, fabrication, installation, and servicing of communication systems of the type specified herein for at least the past five (5) consecutive years.
3) Provide a statement summarizing any pending litigation involving any officer or principal of/or the company, the nature of the litigation and what effect the litigation may carry as it relates to this work in the worst-case scenario. Non-disclosure of this item, if later discovered, may result, at the Owner's discretion, in the Contractor bearing all costs and any cost related to the associated delays in the progress of the work.
4) Copy of low voltage Contractor's current liability insurance,

workers compensation, and state industrial insurance certificates in conformance with the contract documents.

5) A project list containing at least ten (10) California installations completed within the last five (5) years by the low voltage Contractor that are comparable in scope and nature to that specified in the contract document. Provide up-to-date contact information for each project listed including contact's name, title, email address and phone number.

6) Documentation indicating in detail that the low voltage Contractor has competent engineering, installation, service personnel and facilities with reasonable stock of service parts within 75 air-miles of the job site. Do not submit a sales brochure as documentation.

7) Letter(s) from the low voltage equipment manufacturer on the manufacturer's letterhead stating that the bidding Contractor is a Factory Authorized Distributor/Installer, and is trained and certified for the equipment he proposes to use on this project, and is licensed to purchase and install software required to provide the specified functions.

8) Provide manufacturer-issued training certifications for the Project Foreman, and at least 50% of the installation crew that will be assigned to this project. Provide a statement that these personnel are in the local facility, and will be maintained at that facility throughout the project and the warranty period.

9) A fingerprint check must be provided for all personnel working on school sites, performed by the Department of Justice, pursuant to California Education Code Section 45125.1. Fingerprinting shall be performed prior to start of project. All costs associated with DOJ fingerprinting and background checks shall be the full responsibility of the Contractor.

e. The FIFTH section shall include a sample for each product and component label to be installed on this project.

B. When submitting multiple specifications sections, the Contractor must provide digital bookmarks in their submittal for ease of review. Bookmarks must be provided for major section divisions and product changes.

C. Failure to comply with any of the requirements listed above may result in the rejection of the entire submittal package.

1.7 SYSTEM WARRANTY

A. Prior to Owner acceptance, the Contractor shall provide to Owner, a manufacturers product and performance warranty. This will require a submittal of the required pre-job certification registration forms as well as the required project closing information. The Owner will only acknowledge acceptance upon submittal

of a valid manufacturer's warranty.

B. The warranty shall commence from the date of final written acceptance by the Owner.

C. All conditions for obtaining the manufacturers warranty shall be the sole responsibility of the Contractor.

D. The Contractor shall maintain a competent service organization and shall, if requested, submit a service maintenance agreement to the Owner after the end of the guarantee period.

E. A typewritten notice shall be posted at the equipment rack that shall indicate the firm, address and telephone number to call when service is necessary. The notice shall be mounted in a neatly finished metal frame with a clear plastic window and securely attached to the inside of the door.

F. The entire system shall be warranted free of mechanical or electrical defects for a period of one (1) year after final acceptance of the installation. Any material showing mechanical or electrical defects shall be replaced promptly at no expense to the Owner.

1.8 MANUFACTURER

A. Manufacturer of control panel and associated equipment shall be: Digital Monitoring Products to match District Standards.

B. Its is the responsibility of the bidder to insure that the proposed product meets or exceeds every standard set forth in these specifications and the equipment's technical data sheets.

C. The functions and features specified are vital to the operation of this facility. Therefore, inclusion of a component's manufacturer in the list of acceptable manufacturers does not release the Contractor from strict compliance with the requirements of this specification.

D. All basic electronic equipment (not including cable) specified herein shall be produced by a single manufacturer of established reputation and experience who shall have produced similar apparatus for at least three (3) or more years and who shall be able to refer to similar installations rendering satisfactory service.

PART 2 - PRODUCTS

2.1 SYSTEM REQUIREMENTS

A. Electronic Components

1. All system electronic components shall be solid-state type, mounted on printed circuit boards. Light duty relays and similar switching devices shall

be solid-state type or electromechanical.

2. The panel shall have an over-current notification LED that lights when devices connected to the Keypad Bus and LX-Bus(es) draw more current than for which the panel is rated. When the over-current LED lights, the LX-Bus(es) and Keypad bus are shut down.

3. Security system shall not in any way limit or compromise exiting throughn all required exit access and exit discharge systems. Any security system penetration through rated assemblies shall be properly protected with a UL listed fire-stop installation matching the rating of the assembly.

B. Control Unit

1. panel shall provide the following capabilities:

a. Expansion to a total of at least 10,000 user codes with 99 user profile definitions.

b. Sixteen (16) independent door/keypad addresses, each with four zones.

c. Twenty (20) Holiday Dates for custom holiday scheduling by area.

d. A total door access granted event buffer of at least 10,000 events.

e. Anti-passback access control selectable by area and user.

f. Four (4) shift schedules per area.

g. A total of at least 100 programmable output relay schedules.

h. Thirty-two (32) individual reporting areas.

i. Built-in bell and telephone line supervision.

j. Require two-man access code or credentials.

k. Support programming to require the same or different access code entered within a programmed delay time of 1 to 15 minutes after disarming before activating a silent ambush alarm.

l. Support area programming that disables schedule and time-of-day changes while system is armed so that area can only be disarmed during scheduled times.

2. Control unit shall be capable of operating and supervising notification appliance devices as well as addressable initiating detection devices and an integrated supervised dual line digital communicator.

3. Control unit must be “Flash ROM” updatable, and program must be held in non-volatile RAM. The panel shall be able to function while the update

is in process.

4. Control unit shall be capable of sending information to and receiving instructions from the existing District Wide Security Management Software via the District's Wide Area Network (WAN).

5. Control unit shall be capable of operating using an optional built in Encrypted Alarm Router for SCIF (Sensitive Compartmented Information Facility) applications that is certified by NIST (National Institute of Standards and Technology) for 128 Bit AES Rijndael Encryption communications.

6. The optional built-in Encrypted Alarm Router shall be capable of compliance with DCID 6/9 and UL 2050 standards.

C. Control Designations

1. Controls shall be provided to ensure ease of operation of all specified characteristics. Where applicable, clockwise rotation of controls shall result in an increasing function. Controls, switches, visual signals and indicating devices, input and output connectors, terminals and test points shall be clearly marked or labeled on the hardware to permit quick identification of intended use and location.

D. Test Modes

1. The system shall include a provision that permits testing from any alphanumeric keypad. The test shall include standby battery, alarm bell or siren.

2. The system shall include a provision for an automatic, daily, weekly, thirty (30) day, or up to sixty (60) day communication link test from the control panel installation site to the central station.

3. The system shall include a provision for displaying the internal system power and wiring conditions. Internal monitors shall include the bell circuit, AC power, battery voltage level, charging voltage, panel box tamper, phone trouble line 1, phone trouble line 2, transmit trouble, and network trouble.

E. Serial Interface

1. The control panel shall be capable of a serial interface to output information to a standard serial printer or serial interface to a communication port on a standard computer. Through control panel programming the system shall include a provision to allow the selection of which reports are to be output.

F. Power Supplies

1. Power supplies for the control unit shall operate from 120 VAC, supplied

at the respective protected areas. Standby batteries shall be supplied to power the system in the event of a utility power failure. Batteries shall be sized to provide 105% capacity for eight hours. Standby batteries shall be sealed lead-acid. Power supplies shall be all Solid State.

2. Controls shall be designed to maintain full battery charge when alternating current is available. Batteries shall be recharged to 85% capacity within 24 hours from battery use. The system shall be automatically transferred to battery power upon loss of alternating current power and return to alternating current power upon restoration. Intrusion alarms shall not be initiated during switch over; a signal shall be initiated upon failure of battery or alternating current power.

3. Approved power supplies shall meet or exceed the following power supply model specifications:

    a. UL Listed DMP 505-12: 12VDC 5 amp with transformer and enclosure.

    b. UL Listed DMP 504-24: 24 VDC 4 amps with transformer and enclosure.

G. Software

1. The system shall have the capability to interface with computer software with the capability to fully program the panel by connecting to the panel through:

    a. Direct cable connection interface card

    b. Receiver phone line connection

    c. Standard phone line connection

    d. Ethernet network connection

    e. Network connection across the Internet

2. The system shall interface with the existing District Wide Security Management Software via the District Wide Area Network (WAN).

3. The system shall interface with computer software capable of exporting reports in the following file formats:

    a. Excel spreadsheet (*.xls)

    b. Rich Text (*.rtf)

    c. Windows Metafile (*.wmf)

    d. QuickReport (*.qrp)

e. Text (*.txt)

f. Comma-separated (*.csv)

g. HTML document (*.htm)

4. The system shall interface with computer software capable of printing custom, filtered reports including:

a. All Events

b. Zone Action

c. Arming/Disarming

d. Area Late to Close

e. User Code Changes

f. Door Access Granted

g. Door Access Denied

h. Opening/Closing Schedule Changes

i. System Monitors

j. System Events

H. INTEGRATED INTRUSION ALARM AND ACCESS CONTROL OPERATION

1. Access Authority Levels

a. The system shall be capable of programming access credentials authority levels to check whether the user has access to a specific area and also has the authority to disarm or arm the area. If the user access credential has access and disarm/arm authority the system shall provide the user the option to disarm the area simultaneously upon opening the door, or to open the door and begin an entry delay timer. With the timer option the user then disarms the area using an intrusion control keypad inside the area. If the user only has access authority to the area and the area is in an armed condition, the user is denied access to the area.

2. Door Open Schedule Override

a. The system shall be capable of programming certain area doors to be scheduled to unlock and lock at specific times of the day or night. The lock/unlock function shall be capable of an override option depending upon the area armed/disarmed status. If the area remains in an armed status at the scheduled unlock time the

armed status overrides the unlock schedule ensuring the doors remain locked and armed in situations where the business might open late, close early, is affected by inclement weather, or another emergency.

3. Common Area

    a. The system shall be capable of programming a common area to be armed when the last area in the system is armed and disarmed when the first area in the system is disarmed. To ensure the common area works properly it shall not have any user codes assigned to the common area. The system shall also be capable of programming multiple common areas.

4. Early Morning Ambush

    a. The system shall be capable of programming an area to require two user codes be entered within a programmed number of minutes to prevent an ambush message from being sent to the Central Station Receiver. If both user codes are not entered within the time an ambush message is sent to the central station receiver.

    b. Both user codes shall have the authority to disarm the specific area and must be entered at the same keypad or reader. The keypad shall not display any indication that the ambush timer is running.

    c. The system shall be capable of programming an output to provide an external indicator that an ambush situation is taking place.

5. Two-Man Rule

    a. The system shall be capable of programming an area to require two separate user codes be entered in order to disarm and/or allow access to a specific area. Both required codes shall have at least the same or greater authority level. Both required codes shall be entered within 30 seconds or an alarm shall activate.

6. UL Bank Safe & Vault Operation

    a. The system shall be capable of being programmed to only be disarmed during scheduled times regardless of the authority level of any user code or user profile in the system. The schedule and time and date set for this area shall not be capable of being changed while the area is armed. Zones assigned to Bank Safe & Vault areas shall not be able to be bypassed or force armed.

7. Panic Button Summary Test

    a. The system shall have the ability to test panic buttons without

sending a panic alarm to the Central Station Receiver.

b. The system shall also have the ability to send panic zone test verification and failure results to the Central Station Receiver.

c. During the test, each time a panic zone trips, the display number shall increment and the keypad buzzer sound for two (2) seconds.

d. The number of panic zones tripped shall constantly display until the test ends or no panic zone activity has occurred for 20 minutes.

e. When the Panic Zone Test ends and a zone failed (did not trip) during the test, the keypad shall be able to display the zone name and number and have the buzzer sounds for one (1) second. Additional zone failed zones shall display when a button is pressed.

I. FALSE ALARM REDUCTION FEATURES

1. The system shall be capable of providing false alarm reduction features, functions, capabilities, or processes that either require alarms be verified or potential alarms be corrected before a system or zone can be placed into an armed state.

2. Exit Error Alert and Reporting

a. The panel shall be able to provide an automatic function to prevent a false alarm from occurring if an exit door does not properly close after the system is armed.

3. Entry and Exit Delay Annunciation

a. When arming, the system shall provide clear annunciation indicators to the user about the need to exit the premises prior to the exit delay time expiring.

b. When disarming, the system shall notify the user the need to disarm the system prior to the entry delay time expiring.

4. Remote Annunciation

a. The system shall be able to provide entry and exit delay time period notification. This notification can be from DMP keypads, remote annunciators, or bell tests.

5. Abort Reporting

a. The system shall be capable of sending an Abort report to the central station if the system is disarmed while the alarm is still sounding. The Abort report shall be sent after the alarm report to

notify the central station that an authorized user has cancelled the alarm.

6. System Testing

   a. The system shall offer testing features that are simple, quick, and complete and provide the highest measure of safety by ensuring that alarm conditions are detected and communicated to the proper authorities in a timely manner and on a regularly scheduled basis.

7. Ambush Code

   a. The system shall offer ambush codes for those dangerous encounters where the user is instructed to either arm or disarm the system under threat of harm. The duress code shall disarm the system without giving local indication of an alarm that might put the user well-being in jeopardy.

8. Two-Button Panic Feature

   a. The system shall support DMP keypads that provide the option to use only two-button panic codes. The user shall be required to press and hold two designated keys for approximately two seconds before the system generates a panic alarm.

9. Fire Verify Zones

   a. The system shall support Fire Verify zones to help the panel verify the existence of an actual fire condition before it sends an alarm report to the central station. The Fire Verify zone shall require the panel to perform a Sensor Reset whenever a device connected to a Fire Verify zone initiates an alarm. This shall begin a verification period during which the panel waits for a second alarm initiation. If the original zone or any other Fire Verify zone on the panel initiates an alarm within the next 120 seconds, the panel shall recognize this as an actual alarm and send an alarm report to the central station.

10. Cross-Zoning Protection

    a. The system shall support cross-zoning as a means of requiring two device trips to occur within a short period of time before sounding an alarm and sending an alarm report to the central station. Supported device trips shall be from one device that trips two times, or from two devices that each trip once.

11. Swinger Zone Bypassing

    a. The system shall be capable of automatically bypassing a zone if it goes into an alarm or trouble condition a specified number of

times within a one-hour period. The panel shall be able to track the number of times the zone trips while armed and compare that against a programmed number. When that number is reached, the panel shall be able to automatically bypass the zone. The panel shall be capable of resetting the zone when the area to which it is assigned disarms, is manually reset from the keypad or remotely, or remains normal for one hour.

12. Recently Armed Report

    a. The system shall be capable sending a System Recently Armed report, along with a zone alarm report, to the central station any time an alarm occurs within five minutes of the system arming. The System Recently Armed report allows the central station operator to follow a "call the subscriber first" procedure instead of immediately dispatching the police to what could be a false alarm.

13. Transmit Delay

    a. The system shall be capable of programming the panel to wait up to 60 seconds before sending burglary alarm reports to the central station. If an alarm is accidental, the user shall be able to disarm the system within the programmed Transmit Delay time. An Abort report shall be sent in place of an alarm report after the system disarms. During the alarm, sirens and panel relay outputs shall not be delayed and shall still provide local condition annunciation.

14. Call Waiting Cancel

    a. The system shall be capable of being programmed to cancel call waiting any time the panel dials the receiver number to send a report.

2.2 SYSTEM CAPABILITIES

A. System Description

1. The system user shall be capable of selectively arming and disarming any one (1) or more of thirty-two (32) areas within the intrusion detection system based on the user PIN code and/or keypad used. Each of the 574 zones shall be able to be assigned to any of the 32 available areas. The system shall be capable of having up to a 16-character length name programmed for each area.

2. The system user shall be capable of assigning an opening and closing schedule to all areas or to each of the 32 areas separately. Each area shall be able to arm or disarm automatically by a schedule. The system shall have the capacity for common areas that automatically disarm when any other area disarms and that automatically arm when all others areas arm.

3. The networked system shall have the ability to comply with Bank Safe & Vault application. The networked system shall also have the ability to use a two-man rule for disarming or allowing door access to an area. The system shall have the ability to operate a Common Area application.

4. The system shall have a minimum of eight (8) grounded burglary zones available from the control panel.

5. The system areas and zones shall be programmable, and the system shall store, log, display, and transmit specific custom designations for system areas, zones, and user names.

6. To ensure continued, one-call support, the system shall be constructed of sensing components provided directly by the system manufacturer, such as power supplies, motion detectors, door and window position switches, glass break detectors, or other sensing devices that the manufacturer offers.

7. The system controller, user interfaces, zone input devices, relay output devices, and the system signal receiving equipment shall be engineered, manufactured, assembled, and must be distributed from a location within the United States of America.

8. The system shall support user interaction by way of a keypad, web browser, system software, key switch, or radio frequency wireless control, using integrated or auxiliary devices provided by the system manufacturer.

9. The system shall support controller zone input connections, system keypads, system zone expansion modules, and wireless zone input modules, and must support zone input connections by way of at least two (2) competitive products. The system shall offer a seamless integrated compatibility with hard-wire and/ or wireless zone expansion equipment for at least 200 wireless zones and/ or a maximum of 574 hardwired zones.

10. The system shall be capable of offering at least five zone expansion buses, each of which can support the connection of up to 15,000 feet of four-wire cable. Zone expansion and keypad data buses that exceed 2,500 feet of cable must include splitter/repeater modules to boost data voltage and maintain data integrity.

11. The system shall provide a seamless capability to provide a minimum of 500 addressable relays, which can be located at any connection location upon a zone expansion bus.

12. System relay outputs shall have the capability of being triggered as a result of a command from the user interface, changes in system status, changes in zone status, or by a programmable schedule.

13. System relay output states shall be programmable for momentary,

maintained, pulsed, or must follow the state of an associated system zone input.

14. The system shall be completely programmable either locally from a keypad or remotely through a standard dial-up, and network connections by way of a LAN, WAN, and/or by way of the Internet.

15. The control unit shall be completely programmable remotely using remote annunciators, and/or using upload/download software that communicates using SDLC 300 baud, 2400 baud, or IP-addressed data network. On-site programming from a personal computer shall also be permitted.

16. The control unit shall be equipped with an anti-reversing circuit breaker to prevent damage due to accidental reversal of battery leads.

B. Input/Output Capacity

1. This system shall be capable of monitoring a maximum of 574 individual zones and controlling a maximum of 502 output relays.

2. The control panel shall have, as an integral part of the assembly, 2 SPDT Form C relays rated at 1 Amp at 30 VDC and four open collector 12 VDC outputs rated at 50mA each. It shall also have the capacity of a maximum of 125 output expander modules with 500 switched ground, open collector outputs, 50mA maximum and 502 auxiliary relays (Form C rated at 1.0 Amp at 30 VDC).

3. The panel shall also provide 100 programmable output schedules, and include an integral bell alarm circuit providing at least 1.5 Amps of steady, pulsed, or temporal bell output. Output type shall be programmable by zone type. Relays and voltage outputs shall be capable of being independently programmed to turn on and/or off at selected times each day.

C. User/Authorization Level Capacity

1. The system shall be capable of operation by 10,000 unique Personal Identification Number (PIN) codes with each code having one (1) of ninety-nine (99) custom user profiles. This allows for limitation of certain functions to authorized users. The operation of all keypads shall be limited to authorized users.

D. Keypads

1. The system shall support a maximum of sixteen (16) keypads with alphanumeric display. Each keypad shall be capable of arming and disarming any system area based on a pass code or Proximity key authorization. The keypad alphanumeric display shall provide complete prompt messages during all stages of operation and system programming and display all relevant operating and test data.

2. Communication between the control panel and all keypads and zone expanders shall be multiplexed over a non-shielded multi-conductor cable, as recommended by the manufacturer. This cable shall also provide the power to all keypads, zone expanders, output expanders, and other power consuming detection devices.

3. If at any time a keypad does not detect polling, the alphanumeric display shall indicate "SYSTEM TROUBLE". If at any time two (2) devices are programmed for the same address, the alphanumeric keypad shall display “4 WIRE BUS TROUBLE”. If at any time a keypad detects polling but not for its particular address, the alphanumeric display shall indicate "NON POLLED ADDR". The system shall display all system troubles at selected keypads with distinct alphanumeric messages.

4. The keypad shall include self-test diagnostics enabling the installer to test all keypad functions: display test, key test, zone test, LED test, relay test, tone test, and address test.

5. The keypad shall provide an easy-to-read English text display. The text shall exactly match the text seen in all software reports, keypad displays, and central station reports.

6. The keypad user interface shall be a simple-to-use, menu-driven help system that is completely user friendly.

7. The control panel shall support a keypad interface accessible on the World Wide Web in a browser window. The web-accessible keypad interface shall provide at least five (5) programmable hyperlinks for camera access or other use.

8. The system shall support sub-control keypads with four (4) built-in zones and capable of functioning in the following modes:

   a. Panel monitors all four (4) keypad zones independently with a maximum of 125 keypads attached to the control panel

   b. Panel assigns one (1) zone to each keypad and monitors all keypad zones as a single zone with a maximum of 500 keypads attached to the control panel

   c. Stand-alone mode allowing keypad to operate as a self-contained security system independent of the control panel

E. Zone Configuration

1. A minimum of 4 Class B ungrounded zones shall be available at each keypad or zone expander on the system. The system shall have the capacity for a maximum of sixteen (16) keypads and a maximum of 125 four (4) zone expanders or 500 single zone expanders. It shall also have the capacity of a maximum of 125 supervised relay output expanders.

2. Each zone shall function in any of the following configurations: Night, Day, Exit, Fire, Supervisory, Emergency, Panic, Auxiliary 1, Auxiliary 2, Fire Verification, Cross Zone, Priority, and Key Switch Arming.

3. The LX bus and the keypad bus shall be able to operate at a maximum wiring distance of 2500 feet from the control panel on unshielded, non-twisted cable. This distance may be extended to a total of 15,000 feet when bus splitter/repeater modules are installed.

4. The system shall have the capability to incorporate up to 500 addressable zone expander points.

5. Each zone shall function in any of the following configurations:

   a. Night

   b. Day

   c. Exit

   d. Fire

   e. Supervisory

   f. Emergency

   g. Panic

   h. Auxiliary 1

   i. Auxiliary 2

   j. Fire Verification

   k. Cross-Zone

   l. Priority

   m. Arming

F. Communication

1. The system shall be capable of signaling to two (2) remote monitoring station receivers, four (4) telephone numbers of 32 digits each using two (2) separate switched telephone network lines such that if two unsuccessful attempts are made on the first line to the first number, the system shall make two attempts on first line to the second number. If these two attempts are unsuccessful, the system shall make two further attempts on the first line of the first number. After the tenth unsuccessful attempt, dialing shall stop and the alphanumeric keypad shall display trouble. Should another event occur that requires a report to be transmitted, the dialing process shall be repeated. The system shall have

a programmable option to dial a second set of telephone numbers after the first ten attempts using the same sequence.

2. The system shall be capable of communication using the IBM Synchronous Data Link Control format, and at least two (2) other standard industry formats.

3. The system shall be capable of supporting Network communication with digital dialer backup, existing Ethernet or token ring data networks, satellite communication, fiber optic networks, local area networks, wide area networks, cellular communication, and retail data networks.

G. Network Communication

1. The control panel shall be capable of asynchronous network communication with a retry time between 3 and 15 seconds for a total of one (1) minute. If communication is unsuccessful the control panel shall be capable of attempting backup communication through any of the available communication methods to the same receiver or a backup receiver.

2. Network communication between the control panel and the receiver shall be in a proprietary communication format.

3. The control panel shall be capable of supporting Dynamic Host Communication Protocol (DHCP) Internet Protocol (IP) addressing.

4. Underwriters Laboratories (UL) shall list network communication by the control panel for Grade AA High-Line Security.

5. The control panel shall be capable of two-way network communication using standard Ethernet 10BaseT in a LAN, WAN, or Internet configuration.

6. The control panel shall be capable of communication by means of a 128 Bit AES Rijndael Encryption process certified by NIST (National Institute of Standards and Technology) to an SCS-1R receiver with a built-in Encryption Alarm Router.

7. The control panel shall be capable of meeting DCID 6/9 and UL 2050 standards.

H. TCP/IP Network Trapping

1. The control panel shall be capable of having communication set to Network operation. When a trap is set in Remote Link, the software shall be capable of sending a panel trap message with the panel account number to the iCOM or iCOM-E installed in an SCS-1R receiver.

2. The receiver iCOM or iCOM-E shall store the trap and monitor the panel for the next message. When the panel sends its next message, the

receiver iCOM or iCOM-E shall then send a message to the panel to contact Remote Link at the IP address contained in the original trap message.

3. The trap message shall be stored in the receiver iCOM or iCOM-E for up to four hours. If the trap message is not sent to the panel within the four-hour window, the panel trap message shall be discarded and a new trap message must be sent from Remote Link.

4. The user shall be able to view the trap status in the receiver iCOM or iCOM-E in Remote Link using the Trap Query function.

I. NAC Circuit Configuration

1. The system shall be capable of additional Class B NAC circuits utilizing the Model 867 Notification Module. Each module shall be controlled and supervised via the SLC loop and monitor for short circuits, open circuits, and ground faults. The NAC circuits shall monitor for external NAC trouble conditions.

2. The system shall be capable of providing Class A NAC circuits utilizing the Model 865 Notification Module. Each module shall monitor for short circuits, open circuits, and ground faults. The NAC circuits shall monitor for external NAC trouble conditions and have a manual bell silence switch.

2.3 SYSTEM COMPONENT

A. Head End Equipment

1. Intrusion Alarm Control Panel

a. DMP - Model No. XR550DNL-G

1) Complete with large enclosure, Dialer, Zone Expanders, Power Supply, Battery backup, etc.
2) Quantity of (1) one required.

B. LCD Keypad with Integrated Proximity Card Reader

1. DMP – Thinline Series Model No. 7073N-W

a. 32-character alphanumeric LCD display with blue backlit keyboard, self-diagnostic, three 2-button panics,four Class B zones, Form C door access relay, supervised or unsupervised operation, alert sounder, built-in proximity card reader, armed and AC LED.

b. The intrusion alarm system shall be designed to include a predetermined time delay between entry and alarm. Operation of

the keypad shall abort the alarm condition and disable the system until re-armed.

c. During an alarm condition, the alphanumeric readout on the keypad shall indicate, by room name and number, the location of the alarm and the keypad turns red.

d. Quantity and locations as indicated on plans. Provide keypads in the administration building, kitchen, and at other areas noted on the plan drawings.

C. Remote Power Supplies

1. DMP 505-12L with Battery supply.

a. Power supply for passive infrared detectors, 12VDC provide one in each building. Provide power supply, terminal cabinet, transformer and battery as required for a complete and operable system.

1) Terminal cabinet enclosure

a) DMP – Model No. 350-G or equal

2) Transformer 120VAC-12VDC

a) DMP - Model No. 321

3) Battery

a) Yuasa – Model No. NP7-12 or equal

D. Data Bus Splitter/Repeater

1. DMP – Model No. 710

a. Expands the typical LX-Bus installation number of devices and the length of the wire.

b. Quantity as required.

E. Single Point Zone Expander

1. DMP - Model No. 711 – Single Point Zone Expander

a. The single point zone expander module provides a single addressable point and serves as the interface between the 4-wire LX Bus from the control panel and the conventional initiation devices (i.e. motion sensors and door switches). Install in dedicated intrusion alarm terminal cabinets within MDF or IDF rooms. Provide quantity as required for a fully functioning system.

F. Multi-Point Zone Expander

1. DMP – Model No. 714-8 - Eight-point Zone Expander

a. The eight-point zone expander module provides eight addressable points and serves as the interface between the 4-wire LX Bus from the control panel and the conventional initiation devices (i.e. motion sensors and door switches). Provide quantity as required for a fully functioning system.

2. DMP – Model No. 714-16 - Sixteen-point Zone Expander

a. The sixteen-point zone expander module provides eight addressable points and serves as the interface between the 4-wire LX Bus from the control panel and the conventional initiation devices (i.e. motion sensors and door switches). Provide quantity as required for a fully functioning system

G. Motion Sensors

1. Ceiling Mounted Motion Sensor - DMP KX-08.

2. Wall Mounted Motion Sensor - DMP FG-730.

3. Quantity and locations per plan drawings.

H. Glass Break Sensors: DMP FG-730

1. Quantity and locations per plan drawings.

I. Door Contacts

1. Exterior Steel Door – Recessed, Dual Pole Dual Throw, DMP 1076D.

2. Rollup/Overhead Door - DMP 2205A.

3. Quantity and locations per plan drawings.

4. Provide door contacts at roof hatches of each building, whether or not noted on the plan drawings

J. Siren

1. ATW Security – Model No. DS-301SET

a. 25 watt siren in indoor/outdoor stainless steel enclosure.

b. Provide 1 siren for each building that has its own keypad.

K. Wire/Cable

1. Indoor Device Cable or indoor LX Bus/Keypad Bus Cable

a. Falcon Wire - Model No. 590422R or equal

1) 22/4-conductor stranded CMR with white jacket

2. Outdoor/Underground LX Bus/Keypad Bus Cable

a. Falcon Wire - Model No. 400418H20 or equal

1) 18/4-conductor stranded FPL with black jacket
2) Water-blocked cable construction

PART 3 - EXECUTION

3.1 GENERAL INSTALLATION REQUIREMENTS

A. Motion detectors shall be "on" at all times, unless noted otherwise. Main security key switch turns zone alarms on and off and reports to the central station. Alarms are annunciated at all times in the site annunciator when the switch is either in the "ON" or "OFF" position, but will not report to the central station when the switch is in the "OFF" position.

B. 90 degree motion detector shall be located at the corner of a room, facing away from sunlight, heating elements, HVAC outlets and any turbulent air movements. 360 degree motion detectors shall be located in the center of the room. The District Inspector shall confirm these on site.Verify final location of all devices prior to rough-in.

C. Provide lock-on device on all circuit breakers serving security equipment.

D. The wiring of the system shall be executed in accordance with the drawings and the equipment manufacturer's wiring diagrams. Should any variations in these requirements occur, the Contractor shall notify the Architect before making any changes. It shall be the responsibility of the factory-authorized distributor of the approved equipment to install the equipment and guarantee the system to operate as per plans and specifications.

E. Furnish all conduit, junction boxes, conductors, equipment plugs, terminal strips, etcetera, and labor to install a complete and fully operable system.

F. The cables within racks or cabinets shall be carefully cabled and laced with nylon tie-raps. All cables shall be numbered for identification with machine generated labels. Hand written labels are prohibited.

G. Splices of conductors is not permitted.

H. The labor employed by the Contractor shall be regularly employed in the installation and repair of the specified systems and shall be acceptable to the Owner and Architect to engage in the installation and service of this system.

I. The Contractor shall thoroughly clean all equipment and materials. All exposed

parts of the equipment, cabinets, and other equipment shall be left in a clean condition, unblemished and free of all dirt, dust, smudges, spots, fingerprints, etcetera, The Contractor shall remove all debris and rubbish occasioned by the electronic systems work from the site. The Contractor shall thoroughly clean all buildings of any dirt, debris, rubbish, marks, etcetera, caused by the performance of this work.

J. The system must meet all local and other prevailing codes.

K. All cabling installations shall be performed by qualified technicians.

L. Prior to installing cable in conduit, the Contractor shall verify the acceptability of the lubricant to be used with the cable manufacturer, prior to using such a lubricant.

M. Twisted or shielded cable shall not be utilized for this system. No exceptions.

N. Plenum-rated cable may be run exposed above ceilings, provided the cabling is supported independent of other utilities such as conduits, pipes, and the ceiling support systems. The cables shall not be laid directly on the ceiling panels. The use of cable ties shall be done in accordance with the cable manufacturer's requirements. The cable jacket composition must meet local and all other prevailing fire and safety codes.

O. All firewalls penetrated by system cabling shall be sealed by use a non-permanent fire blanket or other method in compliance with the current edition of National Fire Protection Association (NFPA) and the California Electric Code (CEC) or other prevailing code. The Contractor must not use concrete or other non-removable substance for fire stopping on cable trays, wireways or conduits. Contractors who use this method will be required to replace all cables affected and provide the original specified access to each effected area.

P. Materials shall be installed in strict compliance with local building codes. All work shall be performed in accordance with the Digital Monitoring Products (DMP) Inc. instructions and in a manner satisfactory to the Owner's representative.

Q. The installer shall be fully qualified and factory trained by Digital Monitoring Products (DMP) Inc. in the installation, operation, and programming of the system.

R. System shall be, with out exception, be installed in a individual exact point identification fashion. This means that each and every point to be announciated and reported as to its exact device.

3.2 SYSTEM START-UP

A. All start-up programming and system commissioning shall be performed by manufacturer’s trained and certified technicians.

3.3 SYSTEM VERIFICATION

A. Subsequent to system start-up the system installer shall perform a pre-test to verify that the following features are functioning properly.

1. All initiation devices

2. All monitor modules

3. Local audible devices

4. Network connection and communication link to School District security staff and/or a Central Monitoring Station.

3.4 TESTING AND ACCEPTANCE

A. The system installer shall, in the presence of the Inspector of Record (IOR), perform 100% testing as noted in System Verification above.

B. The system shall not be deemed accepted without the approval of the Inspector of Record (IOR) and the Owner's representative.

3.5 IN SERVICE TRAINING

A. The Contractor shall instruct personnel designated by the Owner in the proper use, basic care and maintenance of the system beyond the warranty period. Contractor shall provide up to eight (8) hours of in-service training with this system.

3.6 FACTORY TRAINING & CERTIFICATION

A. The manufacturer shall provide factory-certified training to two (2) technicians from the District. These technicians shall be trained and certified as manufacturer's certified technicians capable of performing any work on the system after the installation of the system.

B. All cost for training including travel, lodging, meals and per diem shall be included in the Contractor's base bid.

3.7 CONTRACT CLOSE-OUT DOCUMENTATION

A. Contractor shall provide the following:

1. Two (2) reproducible hard copies of project record drawings in 30" x 42" bond paper.

2. Two (2) copies of manufacturer's maintenance and operation manuals.

3. Two (2) copies of system warranty

3.8 WARRANTY

A. The Contractor shall warrant the equipment to be new and free from defects in material and workmanship, and will, within one (1) year from the date of installation, repair or replace any equipment found to be defective. This warranty shall not apply to any equipment that has been subject to misuse, abuse, negligence or unauthorized modification.

END OF SECTION

SECTION 283111 - DIGITAL, ADDRESSABLE FIRE ALARM AND VOICE EVACUATION SYSTEM

PART 1 - GENERAL

1.1 RELATED DOCUMENTS

A. Drawings and general provisions of the Contract, including General and Supplementary Conditions and Division 01, 21 and 26 Specification Sections, apply to this Section. District Standards shall be followed.

1.2 SUMMARY

A. This section includes expandable emergency fire alarm and voice evacuation systems, including devices, notification appliances, controls and supervisory devices.

B. Work covered by this section includes furnishing of labor, equipment and materials for installation of the Fire Alarm and Voice Evacuation system as indicated on the drawings and specifications.

C. The Fire Alarm and Voice Evacuation System shall consist of all necessary hardware, equipment and software programming to perform the following functions:
   1. Fire alarm and detection operations.
   2. One-way supervised automatic voice alarm operations.

D. Systems shall be digital addressable type.

E. References to manufacturer’s model numbers and other information are intended to establish minimum standards of performance, function, and quality. Equivalent equipment from Notifier, may be substituted for the specified equipment, as long as minimum standards are met, and with prior approval from the District.

1.3 CODES, STANDARDS, AND REFERENCES

A. Americans with Disabilities Act (ADA), as amended.

B. U.S. Department of Justice, 2010 ADA Standards for Accessible Design.

C. California Building Code (CBC).

D. California Fire Code (CFC).

E. American National Standards Institute / National Fire Protection Association Code No. 70 (ANSI/NFPA 70), *National Electrical Code*, with California Amendments (i.e., California Electrical Code (CEC)).

F. NFPA 72, National Fire Alarm Code.

G. NFPA 90A, Installation of Air Conditioning and Ventilating Systems.

H. NFPA 101, Life Safety Code.

I. National Electrical Contractors Association Standard No. 1 (NECA 1), *Standard Practices for Good Workmanship in Electrical Construction*.

J. Underwriters' Laboratories, Inc. Standard No. 38 (UL 38), Manually-actuated Signaling boxes for use with Fire Protective Signaling Systems.

K. UL 268, Smoke Detectors, Combustion Products Types for Fire Protective Signaling Systems.

L. UL 464, Signal Appliances, Audible.

M. UL 503, Cabinets and Boxes.

N. UL 864, Control Units and Accessories for Fire Alarm Systems.

O. UL 1480, Speakers for Fire Protective Signaling Systems.

P. UL 1711, Amplifiers for Fire Protective Signaling Systems.

Q. UL 1971, Signaling Devices for the Hearing Impaired.

1.4 DEFINITIONS

A. CEC: California Electrical Code.

B. CSFM: California State Fire Marshal.

C. DSA: Division of State Architect.

D. FACP: Fire Alarm Control Panel.

E. IDC: Initiation Device Circuit.

F. INCC: Intelligent Network Command Center.

G. LED: Light Emitting Diode.

H. MDF: Main Distribution Frame.

I. NAC: Notification Appliance Circuit.

J. SLC: Signaling Line Circuit.

1.5 SYSTEM DESCRIPTION

A. A new intelligent reporting, networked, fully peer-to-peer, microprocessor-controlled fire alarm and emergency voice communication system shall be installed in accordance with the specifications, and as indicated on the Drawings.

B. Each SLC and NAC: Limited to 75 percent of its total capacity during initial installation.

C. Basic Performance:
   1. Network Communications Circuit Serving Network Nodes: Wired using single twisted non-shielded 2-conductor cable or connected using approved fiber optic cable between nodes in a Style 7 configuration.
   2. SLCs Serving Addressable Devices: Wired modified Class 'B' with a separate return (redundant) circuit conductor.
   3. IDCs Serving Non-addressable Devices Connected to Addressable Monitor Modules: Wired modified Class B with a separate return (redundant) circuit conductor.
   4. NACs Serving Strobes and Speakers: Wired modified Class 'B' with a separate return (redundant) circuit conductor.
   5. Alarm Signals Arriving at FACP: Not be lost following primary power failure until alarm signal is processed and recorded.
   6. Network Node Communications, Audio Evacuation Channels and Fire Phone Communications:
      a. Communicated between panels and transponders on single pair of copper wires or fiber optic cables.
      b. To enhance system survivability, ability to operate on loss of the network interface, short or open of entire network at the network interface shall be demonstrated at time of system acceptance testing.
   7. Signaling Line Circuits:
      a. Reside in remote transponders with associated audio zones.
      b. SLC modules shall operate in peer-to-peer fashion with all other panels and transponders in system.
      c. On loss of FACP, each transponder shall continue to communicate with remainder of system, including all SLC functions and audio messages located in all transponders.
      d. Systems that provide a "Degraded" mode of operation upon loss of FACP shall not be acceptable.
   8. Audio Amplifiers and Tone-Generating Equipment: Electrically supervised for normal and abnormal conditions.
   9. Amplifiers: Located in transponder cabinets or in main panel.
   10. Speaker NAC Circuits: Arranged such that there is a minimum of 1 speaker circuit per fire alarm zone.

11. NACs, Speaker Circuits and Control Equipment: Arranged such that loss of any 1 speaker circuit will not cause loss of any other speaker circuit in system.
12. Speaker Circuits.
    a. Electrically supervised for open and short circuit conditions.
    b. If short circuit exists on speaker circuit, it shall not be possible to activate that circuit.
    c. Arranged for 25 V RMS and shall be power limited in accordance with CEC.
    d. Provide 25 percent spare capacity for future expansion or increased power output requirements.
13. Speaker Circuits and Control Equipment:
    a. Arranged such that loss of any 1 speaker circuit will not cause loss of any other speaker circuit in system.
    b. Systems utilizing "bulk" audio configurations shall not be acceptable.
14. The District utilizes an existing Notifier Receiving system, in conjunction with an interface to the security system. All school fire alarm systems shall be compatible with these systems.
15. Installing contractor must have a minimum of 20 years' experience installing Notifier fire alarm systems in San Diego County. Installing contractor shall not outsource any equipment or labor. Installing contactor may not be outsourcing labor and installing out sourced equipment from another company.
16. Installing contractor must have an office within San Diego County. That office must include a 24/7 service department and must maintain spare inventory for all equipment used on this project.

D. Basic Fire Alarm Functional Operation: When a fire alarm condition is detected and reported by one of the system alarm initiating devices, the following functions shall immediately occur:
    1. System Alarm LEDs: Flash.
    2. Local Piezoelectric Signal in Control Panel: Sound at a pulse rate.
    3. 80-Character LCD Display: Indicated all information associated with fire alarm condition, including type of alarm point and its location within protected premises.
    4. Historical Log: Record information associated with fire alarm control panel condition, along with time and date of occurrence.
    5. System output programs assigned via control-by-event equations to be activated by particular point in alarm shall be executed, and the associated system outputs (alarm notification appliances and/or relays) shall be activated.
    6. Audio Portion of System: Sound tone (California Temporal Pattern) until system is reset.

E. Fire Alarm System Functionality:
    1. Provide complete, electrically supervised, distributed, networked, analog/addressable fire alarm and control system, with analog initiating devices, and integral multiple-channel voice evacuation.
    2. Fire Alarm System:
        a. Consist of multiple-voice channels with no additional hardware required for total of 4 channels.
        b. Incorporate multiprocessor-based control panels, including model E3 Series including the INCC, Intelligent Loop Interface, Intelligent Network Transponders

(INX), communicating over peer-to-peer token ring network with capacity of up to 64 nodes.

3. Each Node: Incorporate 2 SLCs with capacity to support up to 99 analog addressable detectors and 98 addressable modules per SLC.
4. Voice Data: Transmit over single pair of wires or fiber optic cable.
5. Each Network Node: Incorporate Boolean control-by-event programming, including as a minimum AND, OR, NOT, and Timer functions.
6. Control Panels: Capability to accept firmware upgrades via connection with laptop computer, without requirement of replacing microchips.
7. Network:
   a. Based on peer-to-peer token ring technology operating at 625K baud, using Style 7 configuration.
   b. Capability of using twisted-pair wiring, pair of fiber optic cable strands up to 200 microns, or both, to maximize flexibility in system configuration.
8. Each Network Node:
   a. Capability of being programmed off-line using Windows-based software supplied by fire alarm system manufacturer. Capability of being downloaded by connecting laptop computer into any other node in system. Systems that require system software to be downloaded to each transponder at each transponder location shall not be acceptable.
   b. Capability of being grouped with any number of additional nodes to produce a "Region," allowing that group of nodes to act as 1, while retaining peer-to-peer functionality. Systems utilizing "Master/Slave" configurations shall not be acceptable.
   c. Capability of annunciating all events within its "Region" or annunciating all events from entire network, on front panel LCD without additional equipment.
9. Each Control Panel: Capability of storing its entire program, and allow installer to activate only devices that are installed during construction, without further downloading of system
10. Password Protection: Each system shall be provided with 4 levels of password protection with up to 16 passwords.

F. Automatic Lockdown or Evacuation Voice Announcements:
   1. Provide 10 second continuous tone, followed by repeating prerecorded message, announcing either facility lockdown or evacuation as determined by activation of appropriate manual pull station in Administration area or MDE room.
   2. Voice messages shall be submitted to and approved by the District.

G. Manual Lockdown or Evacuation Voice Announcements:
   1. The control panel operator shall be able to make announcements via the push-to-talk announcement microphone over preselected speaker zones.
   2. Facility for total building announcement shall be accomplished by means of an "All Call" switch.
   3. A second backup microphone shall be located at the Administration office unless shown otherwise on drawings.

1.6 SUBMITTALS

A. Comply with Section 01330 – Submittal Procedures.

B. Product Data: Include rated nameplate data, capacities, weights, dimensions, minimum clearances, installed devices and feature, and performance for each type and size of equipment required.

C. Equipment Submittals:
   1. Cover Page: Indicate the following:
      a. Project name and address.
      b. Date of equipment submittals. Indicate on revised submittals the original submittal date and revised submittal date.
      c. Installing Contractor's name and other contact information.
   2. Catalog cut sheets.
   3. CSFM listings.
   4. Text of voice evacuation message.
   5. Bill of Material: Indicate for each component of system the following:
      a. Quantity.
      b. Model number.
      c. Description.

D. Shop Drawings:
   1. Cover Page: Indicate the following:
      a. Project name and address.
      b. Date of equipment submittals. Indicate on revised submittal the original submittal date and revised submittal date.
      c. Installing contractor's name and other contact information.
   2. Floor Plans:
      a. Provide separate floor plan for each floor.
      b. If a floor plan must be split using match lines to fit on the page, provide match lines and match line references that refer to sheet number that shows area on opposite side of match line.
      c. Prepare using AutoCAD, in DWG format, to District standards.
      d. Prepare to scale 1/8-inch = 1'0", unless otherwise required by the Architect.
      e. Show equipment and device location.
      f. Show wiring information in point-to-point format.
   3. Riser Diagram.
   4. Wire legend.
   5. Symbol legend.
   6. Battery Calculation.

E. Certification: Submit with equipment submittals and shop drawings, letter of certification from major equipment manufacturer, indicating proposed engineered system distributor is an authorized representative of major equipment manufacturer.

F. Project Record Drawings:
   1. Submit complete operation and maintenance manuals within 21 calendar days after acceptance test.
   2. Operation and maintenance manuals shall be similar to equipment submittals but revised to reflect changes made during construction.
   3. Include factory's standard installation and operating instructions.

G. Operation and Maintenance Manuals:
   1. Submit complete operation and maintenance manuals within 21 calendar days after acceptance test.
   2. Operation and maintenance manuals shall be similar to equipment submittals but revised to reflect changes made during construction.
   3. Include factory's standard installation and operating instructions.

1.7 QUALITY ASSURANCE

A. Electrical Components, Devices, and Accessories: Listed and labeled as defined in CEC, Article 100, by a testing agency acceptable to authorities having jurisdiction, and marked for intended use.

B. Comply with NECA 1 and CEC.

C. Codes and Standards:
   1. The enforceable codes shall be the adopted codes at the date of DSA submittal by Architect.

D. Equipment, Programming, and Installation Supervision:
   1. Provide services of approved engineered systems distributor of Notifier for equipment, programming, and installation supervision.
   2. Provide proof of factory training within 14 calendar days of award of the Contract.

E. Software Modifications:
   1. Software shall be compatible with existing school campus system and District central monitoring facility.
   2. Provide services of Notifier-factory-trained and authorized technician to perform system software medications, upgrades, or changes.
   3. Provide use of all hardware, software, programming tools, and documentation necessary to modify fire alarm system software on-site.
   4. Modification includes addition and deletion of devices, circuits, zones, and changes to system operation and custom label changes for devices or zones.
   5. System structure and software shall place no limit on type or extent of software medications on-site.
   6. Modification of software shall not require power-down of system or loss of system fire protection while medications are being made.

1.8 DELIVERY, STORAGE, AND HANDLING

A. Deliver: Deliver materials to site in manufacturer's original, unopened containers and packaging, with labels clearly identifying product name and manufacturer.

B. Storage: Store materials in clean, dry area indoors in accordance with manufacturer's instructions.

C. Handling: Protect materials from damage during handling and installation.

1.9 COORDINATION

A. Coordinate the Work of this section with the Work of other sections.

B. Coordinate sprinkler system riser alarm bell voltage and location with fire suppression contractor.

1.10 WARRANTY

A. Warranty Period for System Equipment: 3 years from date of final acceptance.

1.11 EXTRA MATERIALS

A. Furnish extra materials described below that match products installed and that are packaged with protective covering for storage and identified with labels describing contents. Store in spare parts cabinet at completion of project.
   1. Lamps for Remote Indicating Lamp Units: Quantity equal to 10 percent of amount installed, but not less than one unit.
   2. Smoke Detectors and Heat Detectors: Quantity equal to 10 percent of amount of each type installed, but not less than one unit of each type.
   3. Detector Bases: Quantity equal to 2 percent of amount of each type installed, but not less than one unit of each type.
   4. Keys and Tools: One extra set for access to locked and tamper-proofed components.
   5. FACP Power Supply Module: One.
   6. FACP Intelligent Loop Interface: One.
   7. FACP LCD Display Module: One.
   8. FACP Audio Amplifier: One.
   9. FACP CPU module: One.

PART 2 - PRODUCTS

2.1 MANUFACTURERS

A. Manufacturers: Subject to compliance with requirements, provide products by one of the following:
   1. Notifier.

B. Substituted equipment proposed as “equal to” equipment specified shall meet or exceed requirements of this specification. For equipment other than Notifier Series Expandable Emergency Evacuation Fire Alarm System or Notifier Fire Alarm System, provide proof that such substituted equipment equals or exceeds features, functions, performance, and quality of specified equipment. This proof shall be provided by submission of a copy of this specification with each copy of the submittals, that has had each paragraph marked as either compliant or non-compliant along with a letter from engineering manager or product manager at the factory that certifies information presented as either compliant or non-compliant including a detailed explanation of each paragraph identified as non-compliant or equivalent. In order to ensure that the District is provided with a system that incorporates required survivability features, this letter shall also specifically certify that the system is capable of complying with the test requirements.

2.2 FIRE ALARM/VOICE EVACATION SYSTEM

A. Distributed Networked Fire Alarm System: Notifier Series Expandable Emergency Evacuation Fire Alarm System or Notifier Voice Alarm System.

2.3 FACP

A. Supply user interface, including LCD or touch-screen ¼ VGA display Intelligent Loop Interface Modules, manual switching, phone, and microphone inputs to the network. INCC shall consist of the following units and components:
   1. System Cabinet (B-, C-, or D-Size Cabinet) with associated inner door.
   2. Power Supply Module with batteries.
   3. Intelligent Network Interface Voice Gateway.
   4. 80-Character LCD Display.
   5. Intelligent Loop Main Board Interface.
   6. Intelligent Loop Supplemental Interface.
   7. Ethernet card for network.
   8. RS-485 Repeater.
   9. Auxiliary Switch Module.

B. System Cabinet:
   1. Surface or semi-flush mounted with texture finish.
   2. Consists of back-box, inner door, and door.
   3. Available in at least 3 sizes to best fit project configuration.

4. Houses one or more PM-9 Power Supply Modules, INI-VG Intelligent Network Interface Voice Gateway, 1 or more assemblies, and other optional modules as specified.
5. Construction: Dead-front steel construction with inner door to conceal internal circuitry and wiring.
6. Wiring Gutter Space: A minimum of 1-inch wiring gutter space behind mounting plate.
7. Wiring: Terminated on removable terminal blocks to allow field servicing of modules without disrupting system wiring.

C. Power Supply Module: Use latest technologies to provide power to INCC and incorporate the following features:
1. Power-saving switching technology using no step-down transformers.
2. 9-amp continuous-rated output to supply up to all power necessary under normal and emergency conditions for INCC Modules.
3. Integral battery charger with capacity to charge up to 55 amp-hour batteries while under full load.

D. Batteries:
1. Sufficient capacity to provide power for entire system upon loss of normal AC power for a period of 24 hours with 15 minutes of alarm signaling at end of this 24-hour period, as required by NFPA 72, Local Systems.
2. Intelligent Network Interface Voice Gateway: shall be a multi-function board interchangeable in both INCC and INX. Functions of board shall have the following features as a minimum:
3. Microprocessor: shall have Digital Signal Processor (DSP). Microprocessor shall monitor all system events and perform all system programs, for all control-by-event (CBE) functions. System program shall not be lost upon failure of both primary and secondary power. Programming shall support Boolean logic including AND, OR, NOT, TIMING functions for maximum flexibility.
4. Network Interface: Operate at 625 K baud configurable with any combination of wire and/or fiber topologies. Interface shall communicate with up to 64 nodes in peer-to-peer fashion.
5. RS-485 Serial Output: System shall incorporate RS-485 bus via ribbon farness for connection of modules inside same cabinet, and via 4-wire quick connector for connection of modules up to 3,000 feet from cabinet.
6. Advanced Processing: INI-VG shall incorporate latest in digital signaling processing technology with supporting Boolean logic including AND, OR, NOT, TIME DELAY functions.
7. Microphone Input: On-board and allow for addition of local microphone when used as INCC, including speaker circuit control. Microphone input wiring shall be supervised.
8. Signal Processing: INCC shall use advanced Digital Signal Processing (DSP) technology to allow maximum flexibility of digital audio and control capabilities and operation. Signals to and from INCC shall be transmitted over single pair of twisted unshielded wire or fiber optic pair.
9. Field Programmable: INCC shall be capable of being fully programmed or modified by Field Configuration Program (FCP), to be downloaded via portable computer from any node in system.

10. CBE Programming: INCC shall be capable of programming using Boolean logic including AND, OR, NOT, COUNT, TIMING, and CALENDAR functions to provide complete programming flexibility.
11. Remote INCC Options: System shall have capability of adding remote INCCs or re-locating INCCs utilizing only single pair of twisted unshielded wire or fiber optic pair for all functions.

E. LCD Display Module:
1. LCD Display: 80-character RS-485 based textual annunciator with capability of being mounted locally or remotely. Provides audible and visual annunciation of all alarms and trouble signals. Provide dedicated LEDs for:
   a. AC Power On: Green.
   b. Alarm: Red.
   c. Supervisory: Yellow.
   d. System Trouble: Yellow.
   e. Power Fault: Yellow.
   f. Ground Fault: Yellow.
   g. System Silenced: Yellow.
2. 80-Character Alphanumeric Display: Provide status of all analog/addressable sensors, monitor and control modules. Display shall be backlit liquid crystal type (LCD), clearly visible in dark and under all light conditions.
3. Panel shall contain 4 functional keys:
   a. Alarm Acknowledge.
   b. Trouble Acknowledge.
   c. Signal Silence.
   d. System Reset/Lamp Test.
4. Panel shall contain 3 configuration buttons:
   a. Menu/Back.
   b. Back Space/Edit.
   c. OK/Enter.
5. Panel shall have 12-key telephone-style keypad to permit selection of functions.

F. Intelligent Loop Interface: System shall be of multiprocessor design to allow maximum flexibility of capabilities and operation. Intelligent Loop Interface shall be capable of mounting in stand-alone enclosure or integrated with the INCC, as specified.
1. Field Programmable: System shall be capable of being programmed by Field Configuration Program (FCP), allowing programming to be downloaded via portable computer from any node on network.
2. Serial Output: Supervised serial port shall be provided to operate remote printers and/or video terminals, accept downloaded program from portable computer, or provide 80-column readout of all alarms, troubles, location descriptions, time, and date. Communication shall be standard ASCII code operating from 1,200 to 115,200 baud rate.
3. Serial Output: Each shall incorporate bus via ribbon harness for connection of modules inside same cabinet, and via 4-wire quick connector for connection of modules up to 3,000 feet from cabinet. Bus shall support up to 16 auxiliary switch modules, 6 LCD main annunciators, and 5 LCD annunciators.

4. Peer-to-Peer Panel Configuration: All Loop Interface Modules shall incorporate own programming, log functions, Central Processor Unit, and CBE programming. If any loop becomes disabled, each remaining loop driver shall continue to communicate with remainder of network and maintain normal operation. “Degrade” configurations under these conditions shall not be acceptable.
5. CBE Program: shall be capable of programming using Boolean logic including AND, OR, NOT, and TIMING functions to provide complete programming flexibility.
6. Alarm Verification: Smoke detector alarm verification shall be standard option while allowing other devices such as manual stations and sprinkler flow to create immediate alarm. This feature shall be selectable for smoke sensors that are installed in environments prone to nuisance or unwanted alarms.
7. Alarm Signals: All alarm signals shall be automatically latched or “locked in” at control panel until operated device is returned to normal and control panel is manually reset. When used for sprinkler flow, “SIGNAL SILENCE” switch may be bypassed, if required by Authority Having Jurisdiction.
8. Electrically Supervised:
    a. Each SLC and NAC circuit shall be electrically supervised for opens, shorts, and ground faults. Occurrence of fault shall activate system trouble circuitry, but shall not interfere with proper operation of other circuits.
    b. Yellow “SYSTEM TROUBLE” LEDs shall light and system audible sounder shall steadily sound when trouble is detected in system. Failure of power, open or short circuits on SLCs or NACs, disarrangement in system wiring, failure of microprocessor or any identification module, or system ground faults shall activate this trouble circuit. Trouble signal shall be acknowledged by operating “TROUBLE ACKNOWLEDGE” switch. This shall silence sounder. If subsequent trouble conditions occur, trouble circuitry shall resound. During alarm, all trouble signals shall be suppressed with exception of lighting yellow “SYSTEM TROUBLE” LEDs.
9. Drift Compensation – Analog Smoke Sensors: System software shall automatically adjust each analog smoke sensor approximately once each week for changes in sensitivity due to effects of component aging or environment, including dust. Each sensor shall maintain its actual sensitivity under adverse conditions to respond to alarm conditions while ignoring factors which generally contribute to nuisance alarms. System trouble circuitry shall activate, display “DIRTY DETECTOR” and “VERY DIRTY DETECTOR” indications and identify individual unit that requires maintenance.
10. Analog Smoke Sensor Test: System software shall automatically test each analog smoke sensor a minimum of 3 times daily. Test shall be recognized functional test of each photocell (analog photoelectric sensors) and ionization chamber (analog ionization sensors) as required annually by NFPA 72. Failure of sensor shall activate system trouble circuitry, display “Test Failed” indication, and identify individual device that failed.
11. Remote Station: Fire alarm system shall transmit alarm, supervisory, and trouble signals with alarm having priority over supervisory and trouble signals. Interface with security system RTU via dry contact.
12. Network Annunciator Option: Each associated display shall provide option of being configured as network annunciator. Options for annunciation shall default as regional annunciator with capability of selecting global annunciation to provide system-wide protection and Acknowledge, Silence, and Reset capabilities. See drawings.

13. Redundant History Log: Each module shall contain full 4100 event history log supporting local and network functions. If a main processor or network node is lost the entire log shall be accessible at any other Loop Interface board. This shall be demonstrated by removing power from the INCC followed by extraction of history log from any loop driver location, including the INCC or Transponder.
14. LEDs Indicator and Outputs: Each Loop Interface shall incorporate, as a minimum, the following diagnostic LED indicators:
    a. Power: Green.
    b. Alarm: Red.
    c. Supervisory: Yellow.
    d. General Trouble: Yellow.
    e. Ground Fault: Yellow.
    f. Transmit: Green.
    g. Receive: Green
15. Auxiliary Power Outputs: Each ILI-MB-E3 Loop Interface shall provide the following supply outputs:
    a. 24 VDC non-resettable, 1 amp. Maximum, power limited.
    b. 24 VDC resettable, 1 amp. Maximum, power limited.
16. Microprocessor: Loop interface shall incorporate 32-bit RISC processor. Isolated "watchdog" circuit shall monitor microprocessor and upon failure shall activate system trouble circuits on display. Microprocessor shall access system program for all CBE functions. System program shall not be lost upon failure of both primary and secondary power. Programming shall support Boolean logic including AND, OR, NOT, TIME DELAY functions for maximum flexibility.
17. Auto Programming: System shall provide for all SLC devices on any SLC loop to be pre-programmed into system. Upon activation of auto programming, only devices that are present shall activate. This allows for system to be commissioned in phases without need of additional downloads.
18. Environmental Drift Compensation: System shall provide for setting Environmental Drift Compensation by device. When detector accumulates dust in chamber and reaches unacceptable level buy yet still below allowed limit, control panel shall indicate maintenance alert warning. When detector accumulates dust in chamber above allowed limit, control panel shall indicate maintenance urgent warning.
19. NON-FIRE Alarm Module Reporting: Non-reporting type ID shall be available for use for energy management or other non-fire situations. NON-FIRE point operation shall not affect control panel operation nor shall it display message at panel LDC. Activation of NON-FIRE point shall activate CBE logic, but shall not cause indication on control panel.
20. 1-Man Walk Test:
    a. System shall provide both basic and advanced walk test for testing entire fire alarm system. Basic walk test shall allow single operator to run audible tests on panel. All logic equation automation shall be suspended during test and while annunciators can be enabled for test, all shall default to disabled state. During advanced walk test, field-supplied output point programming shall react to input stimuli, such as CBE and logic equations. When points are activated in advanced test mode, each initiating event shall latch input. Advanced test shall be audible and shall be used

for pull station verification, magnet activated tests on input devices, input and output device, and wiring operation/verification.

b. Test feature is intended to provide for certain random spot testing of system and is not intended to comply with requirements of testing fire alarm systems in accordance with NFPA 72, as it is impossible to test all functions and verify items such as annunciation with only 1 persons.

21. Signaling Line Circuits: Each module shall provide communication with analog/addressable (initiation/control) devices via 2 signaling line circuits. Each signaling line circuit shall be capable of being wired Class A, Style 6 or 7 or Class B, Style 4. Circuits shall be capable of operating in NFPA Class A configuration when equipped with isolator modules between each module type device and isolator sensor bases. Each circuit shall communicate with a maximum of 99 analog sensors and 98 addressable monitor/ control devices. Unique 40-character identifier shall be available for each device. Devices shall be of the Velocity series with capability to poll 10 devices at a time with a maximum polling time of 2 seconds when both SLCs are fully loaded.
22. Notification Appliance Circuits: 2 independent NAC circuits shall be provided on ILI-MB-, polarized and rated at 2 amperes DC per circuit, individually over current protected and supervised for opens, grounds and short circuits. They shall be capable of being wired Class B, Style Y or Class A, Style Z.
23. Alarm Dry Contacts: Provide alarm dry contacts (Form C) rated 2 amps at 30 VDC (resistive) and transfer whenever system supervisory condition occurs.
24. Trouble Dry Contacts: Provide trouble dry contacts (Form C) rated 2 amps at 30 VDC (resistive) and transfer whenever system trouble occurs.

G. Intelligent Network Interface Voice Gateway (INI-VG): INI-VG shall be a multi-function board interchangeable in both INCC and INX. Functions of board shall include the following features as a minimum:

1. Network interface operating at 625 K baud configurable with any combination of wire and/or fiber topologies. Interface shall communicate with up to 64 total INCC, INX, and 7100 control panels in peer-to-peer fashion.
2. Fire Fighter Phone Riser: Not required for this project.
3. Signaling Line Circuit (SLC): shall generate local SLC to communicate with and control up to 16 AOM-TEL modules and 32 AOM-2S or AOM-MUX circuits for fire phone interfacing and additional split-speaker circuits.
4. Provide capability to communicate with up to 16 ASM-16 modules, when used in INX mode up to 3,000 feet.
5. Advanced Processing: shall incorporate latest in digital signaling processing technology with supporting Boolean logic including AND, OR, NOT, TIME DELAY functions.
6. Voice Generation: shall incorporate all processing to allow for 16 distinct pre-recorded messages used in priority fashion with message 1 as highest priority. Total length for 1 to 16 messages shall be up to 3 minutes.

H. Power Supply Module: power supply shall supply all power necessary under normal and emergency conditions. Power supply shall provide capacity to charge up to 55 amp-hour batteries while under full load. Technology used shall be of power-saving switching configuration, eliminating need of stepping transformer.

I. Audio Amplifier: Include as a minimum, the following features:
   1. 50-watt switching audio amplifier, requiring no transformer when used in 25-watt mode.
   2. 2 individually addressable speaker circuits, each with capability of handling part or all of 50-watt supplied power.
   3. Power shall be 24 VDC supplied via terminal block from local PM-9 power supply.
   4. Ability to select from 1 of 16 pre-programmed messages, and announcement locally or from the INCC.
   5. Back-up amplification configurable so 1 AM-50 can perform back-up or 3, perform 1-to-1 back-up if configured to do so in programming.
   6. Status LEDs to indicate normal operation and trouble condition.
   7. Compliance: UL 1711.

2.4 SUPPLEMENTAL NOTIFICATION APPLIANCE CIRCUIT

A. Supplemental Notification Appliance Circuit shall be offering 8.0 amps (6.0 amps continuous) of regulated 24-volt power. HPF24 shall include the following features:
   1. Integral Charger: Charge up to 18.0 amp-hour batteries and support 60-hour standby.
   2. 2 Input Triggers. Input trigger shall be Notification Appliance Circuit (from fire alarm control panel) or relay.
   3. Surface-mount back box.
   4. Ability to delay AC fail delay in accordance with applicable NFPA requirements.
   5. Power limited circuitry in accordance with applicable UL standards.
   6. Operates as sync follower or a sync generator.

2.5 SYSTEM PERIPHERALS

A. Addressable Devices – General:
   1. Provide address-setting means using rotary-decimal or DIP switches.
   2. Use simple to install and maintain decade-type (numbered 0–9) address switches by using standard screwdriver to rotate 2 dials on device to set address. Devices which use binary address set via dipswitch packages, handheld device programmer, or other special tools for setting device address shall not be acceptable.
   3. Detectors: Analog and addressable. Connect to fire alarm control panel's Signaling Line Circuits.
   4. Addressable Thermal and Smoke Detectors: Provide 2 status LEDs. Both LEDs shall flash under normal conditions, indicating detector is operational and in regular communication with control panel, and both LEDs shall be placed into steady illumination by control panel, indicating alarm condition has been detected. If required, flashing mode operation of detector LEDs can be programmed off via fire control panel program.
   5. Fire Alarm Control Panel: Permit detector sensitivity adjustment through field programming of system. Sensitivity can be automatically adjusted by panel on time-of-day basis.
   6. Using software in the INCC, detectors shall automatically compensate for dust accumulation and other slow environmental changes that may affect their performance.

Detectors shall be listed by UL as meeting calibrated sensitivity test requirements of NFPA 72, Chapter 7.

7. Detectors shall be mounted where shown on drawings and shall include separate twist-lock base with tamper-proof feature.
8. Following bases and auxiliary functions shall be available:
   a. Standard base with remote LED output.
   b. Sounder base rated at 85 dBA minimum.
   c. Form-C relay base rated 30 VDC, 2.0 A.
   d. Isolator base.
9. Detectors shall provide test means whereby they will simulate alarm condition and report that condition to control panel. Such test shall be initiated at detector itself by activating magnetic switch or initiated remotely on command from control panel.
10. Detectors shall store internal identifying type code that control panel shall use to identify type of device (PHOTO, THERMAL).

B. Addressable Manual Stations
   1. Manual Fire Alarm Stations: Non-code, non-break glass type, equipped with key lock so they may be tested without operating handle.
   2. Operated Station: Visually apparent, as operated, at a minimum distance of 100 feet from front or side.
   3. Stations shall be designed so after actual activation, they cannot be restored to normal except by key reset.
   4. Manual stations shall be construction of Lexan with clearly visible operating instructions provided on cover. The word FIRE shall appear on front of stations in raised letter, 1.75 inches or larger.
   5. Addressable manual stations shall, on command from control panel, send data to panel representing state of manual switch and addressable communication module status.

C. Intelligent Thermal Detectors: Intelligent addressable devices rated at 135°F and have rate-of-rise element rated at 15°F per minute. Connect via 2 wires to fire alarm control panel signaling line circuit.

D. Intelligent Photoelectric Smoke Detectors: Use photoelectric (light-scattering) principal to measure smoke density and shall, on command from control panel, send data to panel representing analog level of smoke density.

E. Addressable Dry Contact Monitor Modules:
   1. Provide to connect 1 supervised IDC zone of conventional alarm initiating devices (any N>O> dry contact device) to 1 of the fire alarm control panel SLCs.
   2. Mount in standard deep electrical box.
   3. IDC Zone: Suitable for Style B operation.

F. Addressable Control Modules:
   1. Provide to supervise and control operation of 1 conventional NAC of compatible, 24-VDC powered, polarized audio/visual notification appliances or UL-listed polarized relays for fan shutdown and other auxiliary control functions.

2. Mount in standard 4-inch square, 2-1/8-inch deep electrical box or to surface-mounted back box.
3. Control Module NAC: Wire for Style Z or Style Y (Class B/B) with up to 1 amp of inductive signal or 2 amps of resistive signal operation. Relay coil shall be magnetically latched to reduce wiring connection requirements and to ensure 100 percent of all auxiliary relay or NACs shall be energized at same time on same pair of wires.
4. Audio/Visual Power: Provide by separate supervised power circuit from main fire alarm control panel or from supervised, UL-listed remote power supply.

G. Addressable Relay Modules:
1. Available for HVAC control and other building functions. Relay shall have 2 Form C sets of contacts that operate in tandem and are rated for a minimum of 2.0 amps resistive or 1.0 amps inductive. Relay coil shall be magnetically latched to reduce wiring connection requirements and to ensure 100 percent of all auxiliary relay or NACs shall be energized at same time on same pair of wires.
2. Mount in standard 4-inch square, 2-1/8-inch deep electrical box or to surface-mounted back box.

H. Speakers:
1. Compliance: UL 1480.
2. Operate on 25 or 70 VRMS or with field-selectable output taps from 0.25 to 2.0 watts.
3. Speakers in Corridors and Public Spaces: Produce nominal sound output of 84 dBA at 10 feet, at one watt tap setting.
4. Frequency Response: Minimum of 400 Hz to 4,000 Hz.
5. Back of Each Speaker: Sealed to protect speaker cone from damage and dust.
6. Audibility: NFPA 72.

I. Strobes:
1. Compliance: CBC and UL 1971.
2. Maximum Pulse Duration: 0.2 second.
3. Strobe Intensity: UL 1971.
4. Flash Rate: UL 1971.
5. Strobe Candela Rating: Determine by positioning selector switch on back of device.

J. Speaker/Strobes:
1. Compliance: Speaker – UL 1480.
2. Operate on 25 or 70 VRMS with field-selectable output taps from 0.25 to 2.0 watt.
3. Speakers in Corridors and Public Spaces: Produce nominal sound output of 84 dBA at 10 feet at one watt tap setting.
4. Frequency Response: Minimum of 400 Hz to 4,000 Hz.
5. Back of Each Speaker: Sealed to protect speaker cone from damage and dust.
6. Audibility: NFPA 72.
7. Maximum Pulse Duration: 0.2 second.
8. Strobe Intensity: UL 1971.
9. Flash Rate: UL 1971.
10. Strobe Candela Rating: Determine by positioning selector switch on back of device.

2.6 SPARE PARTS CABINET

A. National Electrical Manufacturers Association (NEMA) Type 1 cabinet with hinged lockable door and painted red to match FACP, sized to accommodate the extra materials specified in Part 1 of this specification. Provide an engraved nameplate to read “FIRE ALARM SYSTEM SPARE PARTS CABINET”.

PART 3 - EXECUTION

3.1 EXAMINATION

A. Examine areas and surfaces to receive fire alarm system.
   1. Notify Architect of conditions that would adversely affect installation or subsequent use.
   2. Do not begin installation until unacceptable conditions are corrected.

3.2 INSTALLATION

A. Install fire alarm system in accordance with NFPA 72, CEC and state codes, manufacturer’s instructions, and as indicated on the Drawings.

B. All wiring shall be installed in conduit or surface raceway.

C. Conceal conduit, junction boxes, and conduit supports and hangers in finished areas. Conceal or expose conduit, junction boxes, and conduit supports and hangers in unfinished areas.

D. Do not install smoke detectors before system programming and test period. If construction is ongoing during this period, take measures to protect smoke detectors from contamination and physical damage.

E. Flush-mount fire detection and alarm system devices, control panels, and remote annunciators in finished areas. Surface-mounted fire detection and alarm system devices, control panels, and remote annunciators in unfinished areas.

F. Ensure manual stations are suitable for surface mounting or semi-flush mounting as indicated on the Drawings. Install not less than 42 inches, or more than 48 inches, above finished floor measured to operating handle.

G. Duct Smoke Detectors: Detectors shall be supplied by Fire Alarm Contractor, installed by Mechanical Contractor, wired and commissioned by Fire Alarm Contractor.

H. Provide dedicated 120 VAC branch circuit(s) to Duct Smoke Detectors. Provide handle lock-on for each branch circuit breaker used to power Duct Smoke Detectors.

I. Speaker circuits shall be zoned as indicated on drawings.

J. Install spare parts cabinet in a secured area such as the MDF room, or as instructed by District.

K. Paint fire alarm conduits with a 1-inch wide red band every 5 feet of run. Separate conduits to be provided for fire alarm system.

L. All fire alarm boxes are required to have red covers.

3.3 FIELD QUALITY CONTROL

A. Manufacturer's Field Services: Provide of competent, factory-trained technician authorized by manufacturer to technically supervise and participate during pre-testing and acceptance testing of system.

B. Testing:
1. Conduct compete visual inspection of control panel connections and test wiring for short circuits, ground faults, continuity, and insulation before energizing cables and wires.
2. Close each sprinkler system control valve and verify proper supervisory alarm at the INCC.
3. Verify activation of flow switches.
4. Open initiating device circuits and verify that trouble signal actuates.
5. Open signaling line circuits and verify that trouble signal actuates.
6. Open signaling line circuits and verify that trouble signal actuates.
7. Open and short notification appliance circuits and verify that trouble signal actuates.
8. Ground initiating device circuits and verify response of trouble signals.
9. Ground signaling line circuits and verify response of trouble signals.
10. Check alert tone and prerecorded voice message to alarm notification devices.
11. Check installation, supervision, and operation of intelligent smoke detectors.
12. Introduce on system each of the alarm conditions that system is required to detect. Verify proper receipt and proper processing of signal at the INCC and correct activation of control points.
13. Consult manufacturer's manual to determine proper testing procedures when system is equipped with optional features. This is intended to address such items as verifying controls performed by individually addressed or grouped devices, sensitivity monitoring verification functionality, and similar.

C. Acceptance Testing:
1. Before installation shall be considered completed and acceptable by Authority Having Jurisdiction, a complete test using as a minimum, the following scenarios shall be performed and witnessed by representative approved by Architect. District representative shall be notified before final test in accordance with local requirements.
2. Contractor's job foreman, in presence of representative of manufacturer and District representative, shall operate every installed device to verify proper operation and correct annunciation at control panel.
3. Open signaling line circuits and notification appliance circuits in at least 2 locations to verify presence of supervision.

4. Complete disconnect INCC from rest of network, including Voice INCC. Activate initiating device from transponder. All speaker circuits activated from each transponder shall transmit the correct evacuation or alert message. These messages shall be the same messages transmitted with the INCC activated. Default tones or messages shall not be acceptable.
5. Completely disconnect INCC from rest of network. Activate initiating device. All control outputs supported by transponder SLC circuits shall operate under project programming mode. Default or degrade mode programming shall not be acceptable.
6. When testing has been completed to satisfaction of both Contractor's job foreman and representatives of District, the NFPA form co-signed by each attesting to satisfactory complete of said testing shall be left at the panel, and a copy given to the Authority Having Jurisdiction.
7. Leave fire alarm system in proper working order and, without additional expense to District, replace defective materials and equipment provided within 3 years from date of final acceptance by the District.
8. Provide original and four copies of all test reports.
9. Provide the NFPA certificate to the Owner, Architect, Fire Official, and DSA.

3.4 DEMONSTRATION

A. Provide instruction of school campus staff for operating fire alarm system. Provide two sessions of 2 hours each.

B. Provide annual 2-hour training sessions, by factory-trained technician(s) during warranty period.

C. Provide hands-on demonstrations of operation of fire alarm system components and functions.

END OF SECTION 283111

SECTION 31 10 00
SITE CLEARING

PART 1 GENERAL

1.01 SUMMARY
- A. Section Includes
  - 1. Site Clearing and Grubbing of, but not limited to:
    - a. Removal of vegetation, trees, shrubs, stumps, roots, masonry, concrete, rubbish, debris, and other materials.
    - b. Removal of bituminous and concrete pavement.
    - c. Removal of utility lines.
    - d. Removal of fences and gates.
- B. Products Supplied But Not Installed Under This Section
- C. Products Installed But Not Supplied Under This Section
- D. Related Sections
  - 1. 31 20 00 Earth Moving
- E. Allowances
- F. Unit Prices
- G. Measurement Procedures
- H. Payment Procedures
- I. Alternates

1.02 REFERENCES
- A. The "Greenbook", Standard Specifications for Public Works Construction, current edition (S.S.P.W.C.).

1.03 DEFINITIONS

1.04 SYSTEM DESCRIPTIONS
- A. Design Requirements, Performance Requirements
  - 1. All specified construction materials and construction methods shall comply with the "Greenbook", Standard Specifications for Public Works Construction, current edition.

1.05 SUBMITTALS
- A. General
- B. Product Data
- C. Shop Drawings
  - 1. Submit scaled site plans indicating extend to site clearing and grubbing.
- D. Samples
- E. Quality Assurance/Control Submittals
- F. Closeout Submittals

1.06 QUALITY ASSURANCE
- A. Qualifications
- B. Regulatory Requirements
  - 1. Contractor shall obtain a demolition permit from the governing agencies having jurisdiction prior to the start of work.
  - 2. Contractor shall comply with all requirements of the governing agencies having jurisdiction.
- C. Certifications
- D. Field Samples

E. Mock-ups
F. Pre-installation Meetings

1.07 DELIVERY, STORAGE, AND HANDLING
A. Packing, Shipping, Handling, and Unloading
B. Acceptance at Site
C. Storage and Protection
D. Waste Management and Disposal
1. See section 01 74 00 Cleaning and Waste Management
2. In accordance with S.S.P.W.C., Section 300-1.3.

1.08 PROJECT CONDITIONS
A. Project Environmental Requirements
1. Comply with applicable sections of the Storm Water Pollution Prevention Plan, including, but not limited to, erosion control, soil, waste and maintenance areas.
2. Comply with applicable codes for dust control measures.
B. Existing Conditions
1. The existing soil conditions at this site have been investigated and a report of findings prepared by (engineer), titled:

Geotechnical /Geologic Hazard Report
HIGHLAND HIGH SCHOOL
2900 ROYAL SCOTS WAY, BAKERSFIELD, CA
AUGUST 5,2022
Project No.22-18353

is available information for review by the contractors during the bidding period. This information is offered as supplemental information only and no guarantee of existing soil or other conditions is intended.
2. It shall be the Contractor's full responsibility to furnish and maintain all temporary barricades, warning lights and other types of protection and prevent accidental injury to the general public and all personnel on the project.
3. All existing improvements and all existing active utility lines to remain (whether above or below ground) within the new construction area shall be properly and adequately protected from damage during the entire construction period. It shall be the responsibility of the Contractor to restore to their original condition any of these existing items that are damaged or disturbed in any way.
4. Contractor shall be responsible to protect adjacent properties, roads, rights-of-way, utilities and other improvements above or below ground from damage while performing the work.

1.09 SEQUENCING
1.10 SCHEDULING
1.11 WARRANTY
1.12 SYSTEM STARTUP
1.13 OWNER'S INSTRUCTIONS
1.14 COMMISSIONING
1.15 MAINTENANCE

PART 2 PRODUCTS

2.01 MANUFACTURERS
2.02 EXISTING PRODUCTS
2.03 MATERIALS
2.04 MANUFACTURED UNITS
2.05 EQUIPMENT
2.06 COMPONENTS
2.07 ACCESSORIES
2.08 MIXES
2.09 FABRICATION
2.10 FINISHES
2.11 SOURCE QUALITY CONTROL

PART 3 EXECUTION

3.01 INSTALLERS
3.02 EXAMINATION
- A. Site Verification of Conditions
  1. The Contractor shall visit the site, prior to bid submittal, to determine existing soil and topographic conditions, and the nature of materials that may be encountered during the course of work under this contract and make their own interpretation of the contents of the Geotechnical Report, as they pertain to said conditions.

3.03 PREPARATION
- A. Protection
  1. In accordance with S.S.P.W.C., Section 300-1.2.
  2. Protect all areas indicated to remain prior to the start of any site clearing or demolition.
  3. Provide temporary fencing to protect areas and facilities subject to damage from site clearing or demolition work or as indicated on the drawings.

3.04 ERECTION
3.05 INSTALLATION
3.06 APPLICATION
3.07 CONSTRUCTION
- A. All clearing and grubbing shall be in accordance with S.S.P.W.C., Section 300-1.
- B. All clearing and grubbing shall consist of removing all debris such as metal, broken concrete, trash, vegetation growth and other biodegradable substances from areas to be graded.

C. Unless otherwise indicated to remain, completely remove from the entire site any existing vegetation, trees, shrubs, bushes, debris, poles and pole footings, posts and post footings, structures, foundation, curbs, walls, steps, slabs, pavement, substructures, underground utilities, cesspools, weir boxes, irrigation lines and appurtenances, septic tanks, fences, gates, basement walls and slabs, tanks, manure, etc., including any other items necessary to construct the new work under this contract. Sawcut and remove portions of existing concrete paving and/or asphaltic concrete paving as indicated on the Drawings.

D. Existing obstructions below shall be removed in accordance with the following procedures:

1. Slabs and Pavements
    a. Shall be completely removed.
2. Foundations
    a. Existing at the time of grading shall be removed to a depth not less than two feet below the bottom of the lowest structure footing.
3. Basements, Septic Tanks, Underground Tanks
    a. Buried concrete containers or similar construction located within areas destined to receive pavements, structures, or engineered fills should be completely removed and disposed of off the site. Basements, septic tanks, etc., situated outside structures, or structural fill areas shall be disposed of by breaking down an opening in bottoms to permit drainage, and by breaking walls down, completely removing.
    b. Voids resulting from the removal of septic tanks, cesspools, or any other underground tanks or structures shall be backfilled in accordance with Section 31 20 00 Earth Moving, for fills.
4. Buried Utilities
    a. Sewer, water, and gas lines or electrical conduits to remain in service shall be re-routed to pass no closer than four feet to outside edge of proposed exterior footings of structures.
5. Trees and Root Systems
    a. Trees and tree stumps, unless indicated to remain, shall be removed, together with the bulk of the roots, to a minimum depth of 6 feet below the existing grade within a radius of 12 feet beyond perimeter of trunk at ground line.
    b. Voids resulting from the removal of trees shall be backfilled in accordance with section 31 20 00 Earth Moving, for fills.

C. During demolition operations, thoroughly wet down debris to allay the dust as necessary. Remove debris from the site as it accumulates. Accumulation of debris will not be permitted.

D. Disking existing vegetation into existing surface soils will not be permitted under any circumstances.

E. Clear existing drainage swales of any existing debris, wash sediments, etc.

3.08 REPAIR/RESTORATION
3.09 RE-INSTALLATION
3.10 FIELD QUALITY CONTROL
3.11 ADJUSTING
3.12 CLEANING

A. All items removed shall be disposed of off the property in a legal manner, in accordance with regulations of the City, County, and State authority.

3.13 DEMONSTRATION
3.14 PROTECTION
3.15 SCHEDULES

END OF SECTION

SECTION 31 20 00
EARTH MOVING

PART 1 GENERAL

1.01 SUMMARY

A. Section Includes

1. Work of this section includes all required excavation, grading, preparation of subgrade for fills, proper placement of fills, including backfilling and compaction, the watering, rolling and compacting of fill material in place and the finish grading all as required by the drawings and as specified herein.
2. Geotechnical Tests
3. Special Requirements

B. Products Supplied But Not Installed Under This Section

C. Products Installed But Not Supplied Under This Section

1. Excavation and backfill for utility lines specified under Mechanical and Electrical Sections

D. Related Sections

1. 31 10 00 Site Clearing
2. 31 23 26 Base Course
2. 32 12 16 Asphalt Paving
3. 32 13 13 Concrete Paving

E. Allowances

F. Unit Prices

G. Measurement Procedures

H. Payment Procedures

I. Alternates

1.02 REFERENCES

A. The "Greenbook", Standard Specifications for Public Works Construction, current edition (S.S.P.W.C.).

B. Special inspection for engineered fill and compaction, Title 24, Part 2 C.C.R., 2019 C.B.C. Appendix J.

C. California Department of Transportation, (Caltrans), California Test Method (CTM) Test No. 217 – Method of Test for Sand Equivalent

D. ASTM D4829 - Standard Test Method for Expansion Index of Soils

1.03 DEFINITIONS

A. USEPA: United States Environmental Protection Agency

B. DTSC: State of California Department of Toxic Substances Control

C. Excavations: Excavation shall be defined within the content of these specifications as earth material excavated for the purpose of constructing fill embankment; grading the site to elevations shown on project plans; or placing underground pipelines, conduits, or other subsurface utilities or minor structures. Excavations shall be made true to the lines shown on project plans and to within plus or minus one-tenth (0.1) of a foot, of grades shown on the accepted site grading plans.

D. Engineered Fill: Engineered fill shall be construed within the body of these specifications as earth materials conforming to specifications provided in the soils or geotechnical report placed to raise the grade of the site, to backfill excavations, or to construct asphaltic concrete or Portland cement concrete pavement; and upon which the soils engineer has performed

sufficient tests and has made sufficient observation during placement and compaction to enable him to issue a written statement confirming substantial conformance of the work to project earthwork specifications.

E. On-Site Material: On-site material is earth material obtained in excavation made on the project site.

F. Imported Material: Imported materials are earth materials obtained off the site, hauled in, and placed as fill.

G. Compaction or Compacted: Wherever expressed or implied within the context of these specifications shall be interpreted as compaction to ninety (90) percent of the maximum density obtainable by ASTM Test Method D1557.

H. Optimum Moisture: Wherever used or implied within this report, should be interpreted as that obtained by the described test method for Compaction or Compacted definition.

I. Grading Plane: The grading Plane is the surface of the basement material upon which the lowest layer of subbase, base, asphaltic or Portland cement concrete, surfacing, or other specified layer is placed.

1.04 SYSTEM DESCRIPTION

A. Design Requirements, Performance Requirements

1. All specified construction materials and construction methods shall comply with the "Greenbook", Standard Specifications for Public Works Construction, current edition.
2. All grading work shall be performed in accordance with:
   a. Title 24, Part 2 C.C.R., 2019 C.B.C. Appendix J.
   b. The grading code of Kern County, and any special requirements of the permit.
3. It shall be the responsibility of the contractor to complete all earthwork in accordance with project plans and specifications. No variance from plans and specifications shall be permitted without written approval of the Engineer-of-Record, hereinafter referred to as the "engineer" or his designated representative, hereinafter referred to as the "soils engineer." Earthwork shall not be considered complete until the "engineer" has issued a written statement confirming substantial compliance of earthwork operations to these specifications and to the project plans.
4. The contractor shall assume sole responsibility for job site conditions during the course of earthwork operations on the project, including safety of all persons and preservation of all property; this requirement shall apply continuously and not be limited to normal working hours. The contractor shall defend, indemnify, and hold harmless the owners, engineer, and soils engineer from any and all liability and claims, real or alleged, arising out of performance of earthwork on this project, except from liability incurred through sole negligence of the owner, engineers, or soils engineers.

1.05 SUBMITTALS

A. Product Data

B. Shop Drawings

C. Samples

D. Quality Assurance/Control Submittals

1. Grading Schedule

a. Establishes the construction of the building pad area as a priority of grading construction
b. Appropriate or required reports and certifications from the Soils/Foundation Engineer, Civil Engineer, and governmental authority necessary to commence foundation excavation and building construction.

E. Closeout Submittals
1. A final grading report shall be submitted by the Geotechnical Consultant in accordance with Title 24, Part 2, C.C.R., 2019 C.B.C. Appendix J.
2. At the completion of grading operations and prior to building, A.C. pavement and concrete paving construction, Contractor shall provide an as-built grading plan at his own expense. As-built grading plan shall be prepared, signed and dated by a licensed land surveyor or Registered Civil Engineer licensed to practice land surveying in California.

1.06 QUALITY ASSURANCE
A. Qualifications
1. All imported material and sources for import material shall be approved by the Geotechnical Consultant prior to hauling on site. The Contractor shall be responsible for communicating the necessary information to the Geotechnical Consultant in a timely manner, so the Geotechnical Consultant may perform appropriate testing and reporting.

B. Regulatory Requirements
1. No clearing, demolitions, filling and backfilling, or grading operations shall be performed without the presence of the Geotechnical Engineer.
2. Operations undertaken at the site without the Geotechnical Consultant present may result in exclusion of affected areas from the final compaction report for the project.
3. The presence of the Geotechnical Consultant will be for the purpose of providing observation and field testing and will not include any supervising or directing of the actual work of the Contractor, directing his/her employees or agents. Neither the presence of the field representative nor the observations and testing by the Geotechnical Consultant shall excuse the Contractor in any way for defects discovered in the Contractor's work. The Geotechnical Consultant shall not be responsible for job or site safety on this project, which shall be the sole responsibility of the Contractor.

C. Certifications
E. Field Samples
F. Mock-ups
G. Pre-installation Meetings
1. An onsite pre-installation meeting with Architect, Contractor, the Geotechnical Consultant, Civil Engineer, Inspector, and the Utility Line and Earthwork Subcontractor(s) is required prior to all grading related operations. **ATTENDANCE IS MANDATORY.**

1.07 DELIVERY, STORAGE, AND HANDLING
A. Packing, Shipping, and Handling, and Unloading

1. During all grading operations, water shall be applied to the surfaces in the working area at frequent intervals and in sufficient quantities to allay the dust and for proper compaction. No other method will be permitted.

B. Acceptance at Site

C. Storage and Protection

D. Waste Management and Disposal

1. Surplus earth material not needed for the completion of the grading shall be removed from the site by the Contractor and disposed of in a legal manner.

1.08 PROJECT CONDITIONS

A. Project Environmental Conditions

1. All earth products brought to the site shall meet or exceed USEPA and DTSC regulations for clean fill. Proof of compliance is the responsibility of the Contractor. Provide written certification that import fill meets those requirements.

B. Existing Conditions

1. The existing soil conditions at this site have been investigated and a report of findings prepared by (engineer). titled:

Geotechnical /Geologic Hazard Report
HIGHLAND HIGH SCHOOL
2900 ROYAL SCOTS WAY, BAKERSFIELD, CA
AUGUST 5,2022
Project No.22-18353

is on file at the Architect's Office for review by the contractors during the bidding period.

2. Should soil of inadequate density and bearing capability be encountered at the elevations indicated on the drawings, or where new fill is to be placed upon existing loose fill material exposed by excavation, the excavation shall be carried to the depth required to attain soil of bearing quality as determined by the Geotechnical Consultant. The adequacy of all soil bearing value shall be determined by the Geotechnical Consultant.

1.09 SEQUENCING
1.10 SCHEDULING
1.11 WARRANTY
1.12 SYSTEM STARTUP
1.13 OWNER'S INSTRUCTIONS
1.14 COMMISSIONING
1.15 MAINTENANCE

PART 2 PRODUCTS

2.01 MANUFACTURERS
2.02 EXISTING PRODUCTS
2.03 MATERIALS
2.04 MANUFACTURED UNITS
2.05 EQUIPMENT

2.06 COMPONENTS
2.07 ACCESSORIES
A. Provide cribbing, sheathing, and shoring necessary to safely retain the earth banks and protect excavations and adjoining grades from caving and other damage resulting from excavating, together with suitable forms of protection against bodily injury to personnel employed on the work and the general public. The responsibility for the design, installation, and maintenance of required cribbing and shoring shall be entirely that of the Contractor and shall meet the approval of the State Division of Industrial Safety and local governing agencies' requirements.

2.08 MIXES
2.09 FABRICATION
2.10 FINISHES
2.11 SOURCE QUALITY CONTROL

PART 3 EXECUTION

3.01 INSTALLERS
3.02 EXAMINATION
A. Site Conditions
1. The contractor shall visit the site, prior to bid submittal, to determine existing soil and topographic conditions, and the nature of materials that may be encountered during the course of the work under this contract, and make his own interpretation of the contents of the Geotechnical Report, as they pertain to said conditions.
2. The contractor shall assume all liability under the contract for any loss sustained as a result of variations which may exist between specific soil boring locations or changed conditions resulting from natural or man-made circumstances occurring after the date of the Preliminary Field Investigations.

3.03 PREPARATION
A. Protection
1. Contractor shall protect adjacent properties, roads, rights-of-way, easements and existing improvements from damage during the life of the grading operation and prevent caving, sloughing or the placing of materials or stock piles on adjacent properties.
2. Utility lines and structures shown shall be protected and treated as indicated. Where work not shown is encountered, report it to the Architect before proceeding with excavation. The Contractor shall bear the costs for all repairs to damaged or broken utilities and any damages related thereto.
B. Surface Preparation
1. Prior to any excavation or filling operation, the entire area within the limits of work shall be prepared in accordance with Section 31 10 00 Site Clearing.
2. Prior to soil compaction, existing ground surfaces should be stripped of surface vegetation. A stripping depth of one inch should be adequate. In no instances should stripped material be used in engineered fill or blended with and compacted in original ground.
3.04 ERECTION

3.05 INSTALLATION

3.06 APPLICATION

3.07 CONSTRUCTION

A. General

1. All earth moving shall be in accordance with S.S.P.W.C., Section 300 and 301.
2. Site grading shall consist of excavation and placement of fills to lines and grades shown on the project plans and in accordance with the project specifications and recommendations of the Geotechnical Report.

B. Areas to Receive Fill

1. Surfaces to receive fill shall be scarified to a depth of at least six (6)inches until the surface is free from ruts, hummocks or other uneven features which would prevent uniform compaction by the equipment to be used.
2. After area to receive fill has been cleared and scarified, it shall be moistened and compacted to a depth of at least six (6) inches in accordance with Placing, Spreading, and Compacting Fill Material.

C. Excavation

1. Excavations shall be cut to elevations plus or minus 0.1 foot of the grades shown on the approved plans.
2. When excavated materials are to be used in engineering fill, the excavation shall be made in a manner to produce as much mixing of the excavated materials as practicable.
3. When excavations are backfilled, and where surfaces exposed by excavation are to support structures or concrete floor slabs, the exposed surfaces shall be scarified, moistened, and compacted, as stated above for area to receive fills. Over excavation below specified depths will not eliminate the requirement for exposed surface compaction.

D. Fill Materials

1. Earth materials obtained on site are acceptable for use as engineered fill provided that all grasses, weeds, cobbles less than 2 inches and other deleterious debris are first removed. On-site, non-expansive soils with expansion index of less than 20 must be used. Engineered fill materials should be placed in thin layers (less than ten inches uncompacted thickness), brought to near the optimum moisture content or to a moisture content commensurate with effective compaction and soil stability, and compacted to a minimum of 90 percent of the maximum density obtainable by ASTM Test Method D1557. If unexpected pockets of poor or weak materials are encountered in excavations, and they cannot be upgraded by mixing with other materials or by other means, they may be rejected by the soils engineer for use in engineered fill.
2. Rocks larger than 12 inches in size in any dimension shall not be allowed in the proposed building area. If a large amount of rocks greater than 12 inches in size in any dimension is encountered a rock disposal area shall be located on the grading plan. Rocks shall be mixed with well graded soils to assure that the voids in these areas will fill properly.
3. When imported fill materials are necessary to bring the site up to planned grades, no material shall be imported prior to its approval and acceptance by the soils engineer. Imported fills shall be in

accordance with the minimum requirements outlined in the project Geotechnical Investigation.

4. The soils engineer shall be given notice of the proposed source of imported materials with adequate time allowance for his testing of the proposed materials. The time required for testing will vary with different types of materials, job conditions, and ultimate function of filled areas. The minimum time requirement will not be less than 48 hours.

E. Placing, Spreading, and Compacting Fill Material

1. The fill materials shall be placed in layers which, when compacted, shall not exceed six (6.0) inches in thickness. Each layer shall be spread evenly and shall be thoroughly mixed during the spreading to insure uniformity of material in each layer. Increased thickness of layers may be approved by the soils engineer when conditions warrant.
2. All fills shall be placed in level layers; layers shall be continuous over the area of any structural unit, and all portions of the fill shall be brought up simultaneously within the area of any structural unit. When imported material is used, it must be placed so that its thickness is as uniform as possible within the area of any structural unit.
3. When materials are to be excavated and replaced in a compacted condition, segmented, or leap-frogging of cut-fill operation within the area of any structural unit will not be permitted unless the method is specifically described by the soils engineer.
4. When the moisture content of fill material is below the lower limit specified by the Soils Engineer, water shall be added until the moisture content is as specified; and when it is above the upper limit specified, the material shall be aerated by blading or other satisfactory methods until the moisture content is as specified.
5. After each layer has been placed, mixed, and spread evenly, it shall be thoroughly compacted to not less than ninety (90) percent of maximum density in accordance with ASTM Density Test Method D1557. Compaction shall be by equipment of such design that it will be able to compact the fill to specified density. When the soils engineer specifies a specific type of compaction equipment to be used, such equipment shall be used as specified.
6. Compaction of each layer shall be continuous over its entire area and the equipment shall make sufficient trips to insure that the desired density has been obtained.
7. Field density tests shall be made by the soils engineer. The compaction of each layer of fill shall be subject to testing. Where sheepsfoot rollers are used, the soil may be disturbed to a depth of several inches. Density tests shall be taken in the compacted material below the disturbed surface. When tests indicate the density of any layer of fill or portion thereof is below the required ninety (90) percent density, the particular layer or portion shall be re-worked until the required density has been obtained.
8. When the soils engineer specifies compaction to other standards or to percentages other than ninety (90) percent, such specification, with respect to the particular items shall supersede these specifications.

9. The fill operation shall be continued in six (6) inch compacted layers, as specified above, until the fill has been brought to within 0.1 foot, plus or minus of the finished slopes and grades, as shown on the accepted plans. The finished surface of fill areas shall be graded or bladed to a smooth and uniform surface and no loose material shall be left on the surface.
10. No fill materials shall be placed, spread, or compacted while it is frozen or thawing or during unfavorable weather conditions. When work is interrupted by weather conditions, fill operations shall not be resumed until the soils engineer indicates that moisture content and density of previously placed fill are satisfactory.

F. Planting Areas
1. The top 12 inches of soil within all designated planted areas shall be imported topsoil or existing site soil capable of supporting plant growth. The 12-inch layer shall be measured down from the finish grade shown on the project drawings.

G. Structures, Pool Deck and Pool Bottom Areas:
1. Ground surfaces in the proposed structure, pool deck and pool bottom areas should be compacted in accordance with the following procedures:
   a. Excavate earth material in the proposed **structure** area to a minimum depth of four (4) feet below existing grade or two (2) feet below bottom of foundations, whichever is deeper.
   b. Excavate earth material in the proposed **pool deck** area to a minimum depth of two (2) feet below existing grade or one (1) foot below bottom of the concrete pool deck, whichever is deeper.
   c. Excavate earth material in the proposed **pool bottom** area to a minimum depth of two (2) feet below.
   d. The bottom of the excavation shall be reviewed by the geotechnical engineer or his representative prior to any backfill operations.
   e. Moisten soils to near the optimum moisture or to a moisture consistent with effective compaction and soil stability. Compact moistened soils to a minimum of 90 percent of the maximum density obtained by ASTM Test Method D1557.
   f. Over-excavation laterally should be performed at least five (5) feet beyond the outside edges of exterior footings. Over-excavation laterally should be performed at least two (2) feet beyond pool deck and pool bottom edges.
2. Review of Excavation Bottoms
   a. Prior to placement of backfill, excavation bottoms shall be reviewed for indications of loose-fill, discoloration, or loose, compressible, native materials. Where these are encountered, they should be excavated and removed, or excavated and compacted as directed by the geotechnical engineer. Excavation of native soils shall continue in vertical increments of one foot until relative compaction tests taken at the bottom of the working surface (excavation bottom) equal or exceed 80 percent relative compaction. Fill placement in excavations shall not proceed until the geotechnical engineer or his representative on the site has

reviewed, tested as described above and accepted materials exposed at the bottom of the excavation.

H. Utility Lines:

1. Backfill for utility lines traversing areas proposed for facilities, pavements, concrete slabs-on-grade, or areas to receive engineered fill for future construction should be compacted in accordance with the same requirements for adjacent and/or overlying fill materials.
2. Compaction should include haunch area, spring line and from top of pipe to finished subgrade. The haunch area up to one foot above the top of the pipe should be backfilled with "cohesionless" material.
3. Cohesionless native materials may be used for trench and pipe or conduit backfill. The term "cohesionless," as used herein, is defined as material which, when dry, will flow readily in the haunch areas of the pipe trench.
4. Pipe backfill materials should not contain rocks larger than two inches in maximum dimension. Where adjacent native materials exposed on the trench bottoms contain protruding rock fragments larger than two inches in maximum dimension, conduits and pipelines should be laid on a bedding consisting of clean, cohesionless sand (SP), in the Unified Soils Classification System.
5. Compaction Requirements – See 'Table A' of the project Geotechnical Report for compaction requirements applicable to all electrical, gas or water conduits:

3.08 REPAIR/RESTORATION

3.09 RE-INSTALLATION

3.10 FIELD QUALITY CONTROL

A. Site Test, Inspections

1. A Geotechnical Consultant designated by the Owner will be engaged to perform continuous inspection of earthwork activities related to excavation, tree root removal, stripping, backfill, and compaction and filling of the site.
2. All work shall be done in accordance with these specifications and as recommended and approved by the Geotechnical Consultant. Costs for all such inspections and tests shall be paid by the Owner.
3. The Contractor shall be responsible for notifying the Geotechnical Consultant in advance so that he may be present to perform his services as needed.
4. The Geotechnical Consultant shall approve all subgrades prior to placement of fill or placement of forms and reinforcing.
5. The Geotechnical Consultant shall also conduct an investigation of the fill material to establish the ability of the soil to sustain the vertical loads to be imposed on the fill by the proposed structure.
6. The Geotechnical Consultant shall submit compaction reports to the Architect, DSA, and the Civil Engineer at the completion of the work, including test results and plot plans indicating the locations from which the tested samples of fill were taken.
7. The Geotechnical Consultant shall keep the Architect informed on the progress of the grading work.

3.11 ADJUSTING

3.12 CLEANING

A. Upon completion of work in this Section, remove rubbish, trash, and debris resulting from operations. Remove disused equipment and implements of service, and leave entire area involved in a neat, clean, and acceptable condition.

3.13 DEMONSTRATION

3.14 PROTECTION

A. Protect sloped areas, both cut and fill, existing improvements and adjacent properties from storm damage and flood hazard originating on this project until final acceptance by the Owner.

B. Maintain completed slopes until all slopes are in satisfactory compliance with the job specifications, all berms have been properly constructed, and all associates drainage devices have met the requirements of the Architect. It shall also be the Contractor's responsibility to prevent silt run-off from the limits of work.

C. Prevent silt runoff from the limits of work in accordance with the Stormwater Pollution Prevention Plan.

3.15 SCHEDULES

END OF SECTION

SECTION 31 23 26
BASE COURSE

PART 1 GENERAL

1.01 SUMMARY
- A. Section Includes
  1. Sand
  2. Untreated Base Materials
  3. Soil Sterilization
- B. Products Supplied But Not Installed Under This Section
- C. Products Installed But Not Supplied Under This Section
- D. Related Sections
  1. 03 30 00 Cast-In-Place Concrete
  2. 31 20 00 Earth Moving
  3. 32 12 16 Asphalt Paving
  4. 32 13 13 Concrete Paving
- E. Allowances
- F. Unit Prices
- G. Measurement Procedures
- H. Payment Procedures
- I. Alternates

1.02 REFERENCES
- A. The "Greenbook", Standard Specifications for Public Works Construction, current edition.
- B. Standard Specifications, State of California, California State Transportation Agency, Department of Transportation, current edition (Caltrans)

1.03 DEFINITIONS

1.04 SYSTEM DESCRIPTIONS
- A. Design Requirements, Performance Requirements
  1. All specified construction materials and construction methods shall comply with the "Greenbook", Standard Specifications for Public Works Construction, current edition.

1.05 SUBMITTALS
- A. Product Data
- B. Shop Drawings
- C. Samples
  1. Submit physical samples of specified base course material.
- D. Quality Assurance/Control Submittals
  1. Design Data, Test Reports, Certificates, Manufacturers' Instructions, Manufacturers' Field Reports, Qualification Statements
     a. Submit material source, technical information and test data for base materials. Gradation and quality certifications shall be dated within 30 days of the submittal.
     b. Submit written certification that crushed miscellaneous base does not contain Polychlorinated biphenyls (PCB) above laboratory detection limits when tested in accordance with EPA Method 8082.

c. Submit written documentation, which identifies the source, volume, and proposed transport date of the material for review and approval by Architect prior to importing the material.

d. A statement on company letterhead from the source, stamped by either a California Professional Geologist or Engineer, which states that the subject materials are native rock, do not contain any recycled materials and that the source does not mine ultramafic materials, a source of natural occurring asbestos shall be included in the submittal

E. Closeout Submittals

1.06 QUALITY ASSURANCE

A. Qualifications

1. All base course material and mixes shall comply with the "Greenbook", Standard Specifications for Public Works Construction, current edition, Part 2 – Construction Materials

B. Regulatory Requirements

1. Soil sterilization herbicide shall be approved for use under asphalt paving in the State of California per EPA Regulation No. 62719-107

C. Certifications

D. Field Samples

E. Mock-ups

F. Pre-installation Meetings

1.07 DELIVERY, STORAGE, AND HANDLING

A. Packing, Shipping, Handling, and Unloading

1. In accordance with S.S.P.W.C., Section 300.

B. Acceptance at Site

C. Storage and Protection

D. Waste Management and Disposal

1.08 PROJECT CONDITIONS

1.09 SEQUENCING

1.10 SCHEDULING

1.11 WARRANTY

1.12 SYSTEM STARTUP

1.13 OWNER'S INSTRUCTIONS

1.14 COMMISSIONING

1.15 MAINTENANCE

PART 2 PRODUCTS

2.01 MANUFACTURERS

A. Soil Sterilization

1. Dow AgroSciences LLC, 9330 Zionsville Road, Indianapolis, IN 46268, or equal.

2.02 EXISTING PRODUCTS

2.03 MATERIALS

A. General

1. Materials indicated on Civil and/or Structural Drawings take precedence over materials listed below.

B. Sand (Where shown on drawings)
1. S.S.P.W.C. Section 200-1.5.
2. Not for use under asphalt paving.

C. Untreated Base Materials
1. Caltrans Standard Specification, 26-1.02B Class 2 Aggregate Base.

2.04 MANUFACTURED UNITS
2.05 EQUIPMENT
2.06 COMPONENTS
2.07 ACCESSORIES
A. Soil Sterilization
1. (Dow AgroSciences) Spike 80DF

2.08 MIXES
2.09 FABRICATION
2.10 FINISHES
2.11 SOURCE QUALITY CONTROL
A. Tests, Inspection
1. Sampling and testing of imported and/or exported crushed miscellaneous base shall be performed in accordance with the following table:

Volume (Cubic Yards)	Sampling Frequency
0 to 500	1 per 100 Cubic Yards
501 to 1,000	1 per 250 Cubic Yards
1,001 to 5,000	1 per 250 Cubic Yards for 1st 1,000 Cubic Yards, 1 per 1,000 Cubic yards thereafter
5,001 to 20,000	12 samples for first 5,000 Cubic Yards, 1 per 1,000 Cubic Yards thereafter
Over 20,000	1 per 2,000 Cubic Yards for first 20,000 Cubic Yards, 1 per 2,500 Cubic Yards thereafter

2. Base material shall be inspected by the Project Inspector of Record for gradation and material content prior to installation. The owner may choose to have additional tests performed by a geotechnical engineer, retained by the Owner, before installation.

B. Verification of Performance

PART 3 EXECUTION

3.01 INSTALLERS
3.02 EXAMINATION
3.03 PREPARATION
A. Protection
B. Surface Preparation
1. Subgrade Preparation
a. In accordance with S.S.P.W.C., Section 301-1.
2. Soil Sterilization

a. The installer shall take necessary precautions to prevent contamination of adjacent soil areas with herbicide and for the protection of personnel.
b. Herbicide shall not be applied within two feet of planting areas.

3.04 ERECTION
3.05 INSTALLATION
3.06 APPLICATION
A. Soil Sterilization
1. Apply at a rate of five (5) pounds per acre

3.07 CONSTRUCTION
A. General
1. Install in accordance with S.S.P.W.C., Section 300.
2. Install material in layers not exceeding 4 inches in thickness, unless required otherwise. Grade and compact to Indicated levels or grades, cut and fill, water and roll until the surface is hard and true to line, grade and required section. Provide a relative compaction of at least 95 percent, unless otherwise required.
3. Base material shall be of the thickness indicated on the plans upon final compaction.
4. Grade base course to elevations indicated on Drawings, ready to receive surfacing.
5. The finished surface shall be hard, uniform, and smooth and shall conform to the lines, grades, and cross section shown on the drawings.
B. Sand
1. Install in accordance with S.S.P.W.C., Section 301-2.
C. Untreated Base Materials
1. Install in accordance with S.S.P.W.C., Section 301-2.

3.08 REPAIR/RESTORATION
3.09 RE-INSTALLATION
3.10 FIELD QUALITY CONTROL
3.11 ADJUSTING
3.12 CLEANING
3.13 DEMONSTRATION
3.14 PROTECTION
3.15 SCHEDULES

END OF SECTION

SECTION 32 12 16
ASPHALT PAVING

PART 1 GENERAL

1.01 SUMMARY
- A. Section Includes
  - 1. Asphalt Paving
  - 2. Redwood headers
- B. Products Supplied But Not Installed Under This Section
- C. Products Installed But Not Supplied Under This Section
- D. Related Sections
  - 1. 31 20 00 Earth Moving
  - 2. 31 23 26 Base Course
  - 2. 32 12 36 Seal Coats
  - 2. 32 13 13 Concrete Paving
  - 3. 32 17 23 Pavement Markings
- E. Allowances
- F. Unit Prices
- G. Measurement Procedures
- H. Payment Procedures
- I. Alternates

1.02 REFERENCES
- A. The "Greenbook", Standard Specifications for Public Works Construction, current edition, (S.S.P.W.C.).
- B. Standard Specifications, State of California, California State Transportation Agency, Department of Transportation, current edition (Caltrans).
- C. ASTM D1188 -07(2015) Standard Test Method for Bulk Specific Gravity and Density of Compacted Bituminous Mixtures Using Coated Samples

1.03 DEFINITIONS

1.04 SYSTEM DESCRIPTIONS
- A. Design Requirements, Performance Requirements
  - 1. All specified construction materials and construction methods shall comply with the "Greenbook", Standard Specifications for Public Works Construction, current edition.

1.05 SUBMITTALS
- A. Product Data
  - 1. Submit manufacturers' technical data for materials and products
- B. Shop Drawings
  - 1. Submit scaled site plans indicating extent of paving, paving section, and accessories.
- C. Samples
- D. Quality Assurance/Control Submittals
  - 1. Design Data, Test Reports, Certificates, Manufacturers' Instructions, Manufacturers' Field Reports, Qualification Statements
- E. Closeout Submittals

1.06 QUALITY ASSURANCE
- A. Qualifications

B. Regulatory Requirements
   1. In accordance with Caltrans "Standard Specifications", Section 6-1.04 BUY AMERICA
C. Certifications
D. Field Samples
E. Mock-ups
F. Pre-installation Meetings

1.07 DELIVERY, STORAGE, AND HANDLING
A. Packing, Shipping, Handling, and Unloading
   1. In accordance with S.S.P.W.C., Section 300.
B. Acceptance at Site
   1. No greater amount of material shall be delivered in any one day than can be properly distributed and rolled during that day.
C. Storage and Protection
D. Waste Management and Disposal

1.08 PROJECT CONDITIONS
1.09 SEQUENCING
1.10 SCHEDULING
1.11 WARRANTY
1.12 SYSTEM STARTUP
1.13 OWNER'S INSTRUCTIONS
1.14 COMMISSIONING
1.15 MAINTENANCE

PART 2 PRODUCTS

2.01 MANUFACTURERS
2.02 EXISTING PRODUCTS
2.03 MATERIALS
A. Asphalt Paving
   1. Provide materials of the class, grade, or type indicated on the Drawings, conforming to relevant provisions of Section 203 – Bituminous Materials of the "Greenbook", Standard Specifications For Public Works Construction, current edition
   2. Asphalt paving shall be produced by a commercial asphalt plant.

2.04 MANUFACTURED UNITS
2.05 EQUIPMENT
2.06 COMPONENTS
2.07 ACCESSORIES
A. Concrete Headers
   1. See section 32 13 13 Concrete Paving
B. Wood Headers
   1. Species: Redwood, Heart Grade
   2. Header Size:
      a. Straight: 2" x 6" nominal, unless otherwise noted
      b. Curved: 1" x 6" nominal, unless otherwise noted
C. Wood Stakes
   1. Species: Redwood, Heart Grade
   2. Stake Size: 2" x 4" nominal, unless otherwise noted
D. Nails

1. Min. 12d galvanized common

2.08 MIXES
A. General
1. Mix designs indicated on Civil Drawings take precedence over design listed below.
B. Asphalt Paving
1. Glass and Grade: III-C3 ½"-PG-64-10

2.09 FABRICATION
2.10 FINISHES
2.11 SOURCE QUALITY CONTROL

PART 3 EXECUTION

3.01 INSTALLERS
3.02 EXAMINATION
A. Site Verification of Conditions
1. Do not install bituminous surfacing when atmospheric temperature is below 40 degrees F; or when fog or other unsuitable weather conditions are present.
2. Temperature of mixture at time of installation shall not be lower than 260 degrees F in warm weather or higher than 320 degrees F in cold weather.

3.03 PREPARATION
A. Protection
1. Provide adequate protection for concrete, planting areas, and other finish Work adjacent to areas indicated to receive bituminous surfacing.
2. Adjacent Work damaged or broken by the installers operations shall be repaired or replaced promptly by the installer responsible for the damage.
B. Surface Preparation
1. Initial preparation of subgrade shall be as specified in Section 31 20 00 Earth Moving.
2. If a time lapse has occurred between initial preparation of subgrade and paving operations, the subgrade shall then be scarified to a depth of at least 6 inches, moistened, and the entire area thoroughly compacted by rolling to obtain a smooth, hard, even surface of 90% compaction to receive the mineral aggregate base. The subgrade shall be finished to the required grades with due allowance being made for the thickness of base course and finished surfacing to be placed thereon.
3. Subgrade for the pavement structure shall not vary more than plus or minus 0.04 feet from the specified grade and cross section.
4. Areas inaccessible to power rolling or areas that cannot be compacted properly with power rollers, shall be compacted with vibrating compactors or other suitable mechanical means which will produce a firm foundation for the paving structure.

3.04 ERECTION
3.05 INSTALLATION

3.06 APPLICATION

3.07 CONSTRUCTION

A. General

1. Install in accordance with S.S.P.W.C., Section 302.

B. Headers

1. Install headers along edge of bituminous surfacing abutting turf, earth, or planting area, unless indicated otherwise.
2. Install headers so the bottom surface has continuous bearing on solid grade. Where excavation for headers is undercut, thoroughly tamp soil under the header. Compact backfill on both sides of header to the density of adjacent undisturbed earth.
3. Where wood headers are indicated on drawings, fasten headers in place stakes of length necessary to extend into solid grade a minimum of 18 inches. Stakes shall be of sound material, neatly pointed, driven vertically, and securely nailed to headers. Space stakes, not to exceed 3 feet on center with top of stakes set ½-inch below top of header. Provide a minimum of two nails through each stake.
4. Remove existing headers where new surfacing is installed adjacent to existing surfacing.
5. Install temporary headers at transverse joints of paving where continuous paving operations are not maintained.
6. Provide additional stakes and anchorage as required to fasten headers in place.

C. Asphalt Paving

1. Thickness of Surfacing
   a. As indicated on drawings
   b. Asphalt paving shall be evenly spaced over the base course to such a depth that, after rolling, it will be of the specified cross section and grade of the course being constructed.
2. Surfaces of walls, concrete, masonry, or existing bituminous surfacing indicated to be in direct contact with new installed bituminous surfacing shall be cleaned, dried and uniformly coated with an asphaltic emulsion film.
3. Thicken edges of bituminous surfacing that do not abut walls, concrete, or masonry, and edges joining existing bituminous surfaces. Remove headers at existing bituminous surfacing where new bituminous surfacing is to be installed. Thicken edges an additional 2 inches and taper to the indicated or specified thickness 6 inches back from such edges.
4. Where 2-inch or 3-inch thick surfacing is specified, install surfacing in one course. Where surfacing is specified 4 inches or more in thickness, except for thickened edges, install bituminous surfacing in courses of approximately equal thickness, each course not exceeding 2 ½ inches in thickness.
5. Stakes or Screeds
   a. Provide grade or screed stakes spaced not more than 15 feet apart in flow lines with grades of less than one percent.
   b. Continuous screeds may be provided instead of stakes.
6. Spreading
   a. Install bituminous surfacing in a manner to cause least possible handling of mixture.

b. In open areas and wherever practicable, install by mechanical means with a self-propelled mechanical spreader.
c. In confined or restricted areas, install mixture with hot shovels and rakes, and smooth with lutes.
d. Spreading, once commenced, must be continued without interruption.

7. Joints
a. Provide vertical joints between successive runs.
b. Install joints true to line, grade, and cross section.
c. Lapped joints are not permitted.

8. Rolling
a. Finish roll with a self-propelled tandem roller weighing at least 8 tons. Break down roll with a self-propelled roller weighing between 1-½ tons and 8 tons.
b. Roll in a manner that preserves flow lines and the established finished grades. Break down roll in areas adjacent to flow lines parallel to flow lines. Break down roll after bituminous surfacing is installed without shoving or cracking of mixture under roller. Continue finish rolling until surfacing is unyielding, true to grade, and meets requirements for specified smoothness. Areas inaccessible to finish roller may be finish rolled with breakdown roller or tamped with hot tamping irons and smoothed with hot smoothing irons or hand roller.
c. All rollers must be maintained in good mechanical condition, and those that cannot be operated without jerking, or driven along a straight path, shall not be used. No leakage of petroleum products from any roller shall be allowed to come in contact with the pavements being constructed, nor shall any roller be permitted to stand motionless on any portion of the work before it has been properly compacted. Rolling surfaces shall be treated with water to prevent the adherence of the asphalt paving, but the quantity used must not be such as to be detrimental to the surface being rolled.
d. Where bituminous surfacing abuts concrete, masonry, walks or paving, tamp joint smooth, if necessary, as described above to obtain a uniformly even joint, true to line and grade. Tamp and smooth to properly compact.
e. Compacted bituminous surfacing shall be provided with a bulk specific gravity of at least 2.31 when tested in accordance with ASTM D1188.

D. Site tolerances
1. Smoothness
a. Surface of asphalt paving after rolling, shall be even, smooth and uniform in texture with no voids or rock pockets, free of roller marks or other irregularities, and not varying by more than 0.03 foot, except at local depressions or raised areas as indicated, when a 10-foot straightedge is placed on surface.

2. Grade

a. Finished grade shall not vary more than 0.02 foot above or below required grade. Variations within prescribed tolerance shall be compensating so that average grade and cross-section are provided.

E. Surface sealing

a. After bituminous surfacing has passed flood test, clear and allow to dry and provide one more coat of surface seal as specified in section 32 12 36 Seal Coats.

b. Where indicated, provide multiple coats of surface seal to existing bituminous surfacing.

c. Where new bituminous surfacing joins existing bituminous surfacing, overlap surface seal a minimum of 12 inches onto existing bituminous surfacing.

3.08 REPAIR/RESTORATION

3.09 RE-INSTALLATION

3.10 FIELD QUALITY CONTROL

A. Site Tests, Inspection

1. After first coat of surface seal has been installed and after a 24-hour period, a flood test shall be completed of the bituminous surfacing in presence of the Project Inspector.
2. Flooding shall be done by water tank truck.
3. Repair areas of standing water or puddles and flood test locally; Install surface seal and retest as necessary.
4. The edges of the repair fill shall be feathered and smoothed so that the joint between the fill and the original surfacing is invisible.

3.11 ADJUSTING

3.12 CLEANING

A. The contractor shall clean up the paved areas prior to acceptance of the work. All dirt, spoil, and debris of any nature shall be removed, and the entire site shall present a clean, workman like appearance. Any damage to paint work from paving or seal coating operations shall be corrected.

3.13 DEMONSTRATION

3.14 PROTECTION

A. Protect the Work of this section until Substantial Completion

3.15 SCHEDULES

END OF SECTION

SECTION 32 12 36
SEAL COATS

PART 1 GENERAL

1.01 SUMMARY
- A. Section Includes
  - 1. Seal coat over asphalt paving.
- B. Products Supplied But Not Installed Under This Section
- C. Products Installed But Not Supplied Under This Section
- D. Related Sections
  - 1. 32 12 16 Asphalt Paving
  - 2. 32 17 23 Pavement Markings
- E. Allowances
- F. Unit Prices
- G. Measurement Procedures
- H. Payment Procedures
- I. Alternates

1.02 REFERENCES
- A. The "Greenbook", Standard Specifications for Public Works Construction, current edition, (S.S.P.W.C.).
- B. Standard Specifications, State of California, California State Transportation Agency, Department of Transportation, current edition (Caltrans).

1.03 DEFINITIONS

1.04 SYSTEM DESCRIPTIONS
- A. Design Requirements, Performance Requirements
  - 1. All specified construction materials and construction methods shall comply with the "Greenbook", Standard Specifications for Public Works Construction, current edition.

1.05 SUBMITTALS
- A. Product Data
  - 1. Submit manufacturers' product information and application procedures.
- B. Shop Drawings
- C. Samples
- D. Quality Assurance/Control Submittals
  - 1. Design Data, Test Reports, Certificates, Manufacturers' Instructions, Manufacturers' Field Reports, Qualification Statements
- E. Closeout Submittals

1.06 QUALITY ASSURANCE
- A. Qualifications
- B. Regulatory Requirements
  - 1. In accordance with Caltrans "Standard Specifications", Section 6-1.04 BUY AMERICA
- C. Certifications
- D. Field Samples
- E. Mock-ups
- F. Pre-installation Meetings

1.07 DELIVERY, STORAGE, AND HANDLING
1.08 PROJECT CONDITIONS
1.09 SEQUENCING
1.10 SCHEDULING
1.11 WARRANTY
1.12 SYSTEM STARTUP
1.13 OWNER'S INSTRUCTIONS
1.14 COMMISSIONING
1.15 MAINTENANCE
- A. Extra Materials
  1. Provide ten (10) gallons of material in labeled, unopened containers.
- B. Maintenance Service

PART 2 PRODUCTS

2.01 MANUFACTURERS
- A. GuardTop L.L.C., Three Monarch Bay Plaza, Suite 210, Monarch Beach, CA 92629, or equal.
- B. Reed & Graham, Inc., 690 Sunol St., San Jose, CA 95126

2.02 EXISTING PRODUCTS
2.03 MATERIALS
- A. (GuardTop) Seal Coat
- B. (Reed & Graham) Over Kote

2.04 MANUFACTURED UNITS
2.05 EQUIPMENT
2.06 COMPONENTS
2.07 ACCESSORIES
2.08 MIXES
2.09 FABRICATION
2.10 FINISHES
2.11 SOURCE QUALITY CONTROL

PART 3 EXECUTION

3.01 INSTALLERS
3.02 EXAMINATION
- A. Site Verification of Conditions
  1. Seal coat shall not be applied in temperatures below 55 degrees F.
  2. Material shall not be applied within 48 hours of forecasted rain, as rain may affect curing of asphalt seal coat products.

3.03 PREPARATION
- A. Protection
  1. Surface protection shall conform to manufacturers recommend procedures
- B. Surface Preparation
  1. If ambient temperatures exceed 100 degrees F, extra care should be taken in preparing the surface.

2. Surface preparation shall conform to manufacturers' recommend procedures.

3.04 ERECTION
3.05 INSTALLATION
3.06 APPLICATION

A. General
   1. Install in accordance with S.S.P.W.C., Section 302.

B. Application Rates

SURFACE	NO. of COATS	RATE
Smooth Dense Pavement	2	25 to 30 gallons per 1,000 sf
Medium Surface	2	30 to 35 gallons per 1,000 sf
Rough, Aged Surface	3	45 gallons per 1,000 sf
Excessively Rough Surfaces	3 Min.	Consult Manufacturer's Representative

C. First Coat
   1. Just prior to applying the first coat, mist the surface with water.
   2. Apply seal coat using a truck mounted tank, wheeled container, or can.
   3. Spread in continuous parallel lines by means of rubber-faced squeegees or by broom. This process can be completed by hand or by machine.
   4. All tools should be misted wet before use to avoid product adhesion.
   5. After material has been applied to the surface, spread by pulling the material toward the operator in a manner that will eliminate all ridges and air pockets.
   6. Excessively rough areas
      a. For the first coat add 3 pounds of 30 mesh sand to each gallon of seal coat and 1/10 gallon of Hard Base Emulsion. Apply as a normal first coat. Then apply two additional coats of material without the sand additive to the surface.
   7. Flood Test

D. Second Coat
   1. Install only after surface has passed flood test.
   2. After the first coat has completely dried, re-mist the surface with water, check to see that the surface is clean and free of all debris and apply the second coat using the same application process as the first coat.

E. Third Coat
   1. If a third coat is required repeat the steps for second Coat.

F. Drying Time
   1. Seal coat shall be allowed to dry a minimum of 24 hours before any traffic is permitted.
   2. When asphalt is cold, in shade or the air temperature is below 75 degrees F drying time may need to be extended.

3.07 CONSTRUCTION
3.08 REPAIR/RESTORATION
3.09 RE-INSTALLATION

3.10 FIELD QUALITY CONTROL
3.11 ADJUSTING
3.12 CLEANING
3.13 DEMONSTRATION
3.14 PROTECTION
3.15 SCHEDULES

END OF SECTION

SECTION 32 13 13
CONCRETE PAVING

PART 1 GENERAL

1.01 SUMMARY
- A. Section Includes
  - 1. Portland Cement Concrete for:
    - a. Surface Improvements
    - b. Site Cast Sewer and Storm Drainage Facilities
    - c. Reinforced Structures
    - d. Miscellaneous Site Elements
  - 2. Reinforcing
  - 3. Concrete Construction Joint Filler
  - 4. Field-Molded Concrete Paving Joint Sealant
  - 5. Concrete curing compounds
- B. Products Supplied But Not Installed Under This Section
- C. Products Installed But Not Supplied Under This Section
- D. Related Sections
  - 1. 03 10 00 Concrete Forming and Accessories
  - 2. 03 24 00 Synthetic Fiber Reinforcement
  - 3. 31 23 26 Base Course
  - 4. 32 12 16 Asphalt Paving
  - 5. 33 11 00 Water Utility Distribution Piping
- E. Allowances
- F. Unit Prices
- G. Measurement Procedures
- H. Payment Procedures
- I. Alternates

1.02 REFERENCES
- A. ACI 318-14: Building Code Requirements for Structural Concrete and Commentary
- B. ASTM C33 Standard Specification for Concrete Aggregates
- C. ASTM C150 Standard Specification for Portland Cement
- D. ASTM C979 Standard Specification for Pigments for Integrally Colored Concrete
- E. ASTM C1602 Standard Specification for Mixing Water Used in the Production of Hydraulic Cement Concrete
- F. The “Greenbook” Standard Specifications for Public Works Construction, S.S.P.W.C. latest edition.
- G. ASTM C309 Standard Specification for Liquid Membrane-Forming Compounds for Curing Concrete

1.03 DEFINITIONS

1.04 SYSTEM DESCRIPTIONS
1. All specified construction materials and construction methods shall comply with the “Greenbook”, Standard Specifications for Public Works Construction, current edition.
2. Concrete shall meet the design criteria as indicated on the civil drawings.
3. Concrete shall be mixed, placed, and cured in accordance with Referenced Standards (1.02 References) and project specifications.

4. The slab-on-grade is not designed to support traffic from cranes or other heavy construction vehicles. Contractor shall repair or replace damaged concrete slabs.

1.05 SUBMITTALS

A. Product Data
   1. Submit manufacturer's product data for admixtures used.
   2. Submit manufacturer's product data for chemical curing compounds used.

B. Shop Drawings
   1. Submit concrete control and construction joint drawings and details.
   2. Submit drawings indicating locations of reinforcing embedded items, and interfacing with other work.

C. Samples
   1. When coloring admixtures are specified, submit 3-inch x 3-inch concrete sample of each specified color.

D. Quality Assurance/Control Submittals
   1. Submit mix design in accordance with the "Greenbook" Standard Specifications for Public Works Construction, Section 201 – Concrete, Mortar, and Related Materials.
   2. Design Data, Test Reports, Certificates, Manufacturers' Instructions, Manufacturers' Field Reports, Qualification Statements
      a. All mix designs, reports, qualifications shall indicate concrete production facility.
      b. All mix designs, reports, qualifications shall be stamped and signed by a State of California Registered Professional Civil Engineer
      c. Submit the following for each mix design specified:
         1. Statement of Mix Design for Concrete
         2. Indicate cementitious materials, aggregates, and admixtures.
         3. Aggregate gradations.
         4. Compressive Report
         5. Shrinkage Report
         6. Mix Design Qualification
      d. Submit the material standards conformances:
         1. Portland Cement: ASTM C150
         2. Normal Weight Concrete Aggregates: ASTM C33
         3. Light Weight Concrete Aggregates: ASTM C330
         4. Curing Materials: ASTM C171
         5. Water: ASTM C1602

E. Closeout Submittals
   1. Not required.

1.06 QUALITY ASSURANCE

A. Qualifications
   1. Provide adequate numbers of skilled personnel who are thoroughly trained and experienced in the necessary crafts and completely familiar with the specified requirements and the methods needed for proper performance of the work of this section.

B. Regulatory Requirements

1. Portland cement concrete paving shall be stable, firm, and slip resistant and shall comply with **CBC Sections 11B-302 and 11B-403.**
2. Ground surfaces on accessible routes, clear floor or ground spaces, and turning spaces for play areas shall comply with **CBC Section 11B-1008.2.6** as follows:
    a. Ground surfaces shall be inspected and maintained regularly and frequently to ensure continued compliance with ASTM F 1951.
    b. Ground surfaces located within use zones shall comply with ASTM F 1292.

C. Certifications

D. Field Samples
1. Provide on-site sample panels approximately 5-feet x 5-feet for each specified finish. Construct additional panels as may be necessary to gain acceptance of finishes desired. After rejection of any panel, remove from site immediately. Accepted and reviewed panel is to be left in place at site for project duration as a project standard.

E. Mock-ups

F. Pre-installation Meetings
1. The pre-installation meeting shall include the following representatives: Owner's Representative, Contractor, Architect, Construction Manager, and any other individuals requested by the Owner or Architect.
2. The pre-installation meeting shall follow ACI 302.1R requirements and recommendations for agenda items outlined in section 1.1.2 Preconstruction meeting.

1.07 DELIVERY, STORAGE, AND HANDLING

A. Packing, Shipping, Handling, and Unloading
1. Not Applicable

B. Acceptance at Site
1. Not Applicable

C. Storage and Protection
1. Storage of materials shall be in accordance with ACI 318, 26.5.1.1

D. Waste Management and Disposal
1. Comply with Local, State, and Federal Laws.

1.08 PROJECT CONDITIONS
1.09 SEQUENCING
1.10 SCHEDULING
1.11 WARRANTY
1.12 SYSTEM STARTUP
1.13 OWNER'S INSTRUCTIONS
1.14 COMMISSIONING
1.15 MAINTENANCE

PART 2 PRODUCTS

2.01 MANUFACTURERS
2.02 EXISTING PRODUCTS
2.03 MATERIALS

A. Base Course

1. See Section 31 23 26 Base Course

B. Reinforcement
1. Reinforcing Steel, See Section 03 20 00 Concrete Reinforcing
2. Synthetic Fiber, See Section 03 24 00 Synthetic Fiber Reinforcement

C. Cement
1. In accordance with S.S.P.W.C., Section 201-1.2.1
2. ASTM C150 - Portland Cement, Type II/V

D. Aggregates
1. Aggregates found to be potentially reactive shall not be used.
2. In accordance with S.S.P.W.C., Section 201-1.2.2
3. Normal Weight Concrete (NWC): ASTM C33

E. Water
1. In accordance with S.S.P.W.C., Section 201-1.2.3.
2. Water used in mixing, curing, and cleaning concrete shall conform to ASTM C1602.

F. Chemical Admixtures
1. Use as required and only with the written acceptance of the Architect and Civil Engineer.
2. Chemical admixtures shall be in accordance with S.S.P.W.C., Section 201-1.2.4.
3. Coloring admixtures shall be in conformance with ASTM C979
   a. Job-proportioning or job-mixing of material for monolithic colored surfaces is not permitted.
   b. Shall be lime-proof and contain no calcium chloride.
   c. Color: As selected by Architect.

G. Concrete Curing Materials
1. Spray-Applied Membrane Curing Compounds
   a. In accordance with S.S.P.W.C., Section 201-4.1.
   c. For integrally colored concrete, curing compound shall pigmented to match coloring admixture.

2.04 MANUFACTURED UNITS

2.05 EQUIPMENT

2.06 COMPONENTS

2.07 ACCESSORIES

A. Forming and Accessories
1. See Section 03 10 00 Concrete Forming and Accessories

B. Concrete Construction Joint Filler
1. (Cellotex) Flexcell Expansion Joint Filler, ½-inch thick.
2. (Homasote) Homex 300 Expansion Joint Filler, ½-inch thick.
3. (W.R. Meadows) Fibre Expansion Joint, ½-inch thick.

C. Field-Molded Concrete Paving Joint Sealant
1. (Tremco) Vulkem 445SSL, Field-Tintable, Semi-Self-Leveling, Multi-Component, Polyurethane Sealant
   a. Color as selected by Architect
2. (DAP) DAP 3.0, Self-Leveling Concrete & Masonry High Performance Sealant
   a. Color as selected by Architect
3. (W.R. Meadows) Pourthane SL, Self-Leveling Polyurethane Sealant
   a. Color as selected by Architect

2.08 MIXES

A. General

1. Mix designs indicated on Civil and/or Structural Drawings take precedence over mix design listed below.

B. Surface Improvements

1. Concrete Pavement
   a. S.S.P.W.C., Concrete Class 560-C-3250
   b. S.S.P.W.C., Concrete Class 650-CW-4000 (at fire apparatus access roadways)
2. Curb, Integral Curb and Pavement, Gutter, Walk, Alley Aprons
   a. S.S.P.W.C., Concrete Class 560-C-3250
3. Extruded Curb, Curb and Gutter
   a. S.S.P.W.C., Concrete Class 560-C-3250

C. Sewer and Storm Drainage Facilities

1. Pipe Collars, Beam Support for Pipe, Pre-Cast Manhole Components, Catch Basins, Sidewalks Culverts
   a. S.S.P.W.C., Concrete Class 560-C-3250
2. Pipe Bedding and Encasement, Anchors and Thrust Blocks, Wall Support for Pipe
   a. S.S.P.W.C., Concrete Class 560-C-3250

D. Reinforced Structures

1. See Structural Drawings

E. Miscellaneous

1. Street Light and Traffic Signal Foundations, Survey Monuments
   1. See Structural Drawings
2. Fence, Gate, and Guardrail Post Foundations
   1. See Structural Drawings
3. Concrete Not Otherwise Specified
   1. S.S.P.W.C., Concrete Class 560-C-3250

2.09 FABRICATION

2.10 FINISHES

A. Broom Finish, See Section 3.15

1. Light Broom Finish
2. Medium Broom Finish
3. Heavy Broom Finish

2.11 SOURCE QUALITY CONTROL

PART 3 EXECUTION

2.01 INSTALLERS

3.02 EXAMINATION

3.03 PREPARATION

A. Protection

B. Surface Preparation

1. In accordance with S.S.P.W.C., Section 302.
2. In accordance with S.S.P.W.C., Section 303.

3.04 ERECTION

3.05 INSTALLATION

3.06 APPLICATION

A. General
   1. In accordance with S.S.P.W.C., Section 302.
   2. In accordance with S.S.P.W.C., Section 303.
B. Concrete Curing Application
   1. In accordance with S.S.P.W.C., Section 201-4.1.2

3.07 CONSTRUCTION
A. General
   1. In accordance with S.S.P.W.C., Section 302.
   2. In accordance with S.S.P.W.C., Section 303.
B. Formwork
   1. In accordance with S.S.P.W.C., Section 302-6.2
   2. See Section 03 10 00 Concrete Forming and Accessories
C. Mixing
   1. In accordance with S.S.P.W.C., Section 201-1.4
D. Placing
   1. In accordance with S.S.P.W.C., Section 303-1.8
E. Curing
   1. In accordance with S.S.P.W.C., Section 302-6.6
   2. No concrete curing compounds shall be used on tennis court paving.
F. Adverse Weather Requirements
   1. In accordance with S.S.P.W.C., Section 303-1.8.8
H. Formwork Removal
   1. In accordance with ACI 318, 26.11.2.1
I. Embedment's
   1. In accordance with ACI 318, 20.7, 26.8
J. Construction Joints and Control Joints
   1. In accordance with S.S.P.W.C., Section 303-1.8.6, 303-1.8.7
   2. In accordance with Construction Documents.
   3. Construction Joints shall be spaced no greater than 40'-0" on center in any direction.
   4. Control Joints shall be spaced no greater than 7'-0" on center in any direction, unless noted otherwise.
   5. Control joints shall be constructed by saw cutting. Saw cut joints shall be constructed as soon as the concrete can be saw cut without raveling the joint edge. Immediately after sawing each joint, the area shall be heavily misted with water.
K. Finishing
   1. In accordance with S.S.P.W.C., Section 302-6.4
   2. In accordance with S.S.P.W.C., Section 303-1.9
   3. At tennis court concrete paving areas, concrete must be acid-etched with either phosphoric, muriatic acid and must be thoroughly rinsed to remove laitance and salt.
L. Offsite Concrete Work
   1. Concrete driveway aprons, street sidewalks, curbs, and gutters, etc. indicated to be constructed outside of property lines shall conform to the standards and specifications of the public agency having jurisdiction and shall be subject to inspection by its representative.
   2. The Contractor shall obtain and pay for all necessary permits. The Owner will pay for all inspection fees.

3.08 REPAIR/RESTORATION
3.09 RE-INSTALLATION

3.10 FIELD QUALITY CONTROL

A. Site Tests, Inspection

1. All concrete gutters and concrete pavement shall be given a flood test in the presence of the Project Inspector of Record (IOR).
2. All concrete work where water ponds and does not run off in a reasonable amount of time, shall be removed to the nearest joint line and replaced to provide proper drainage.

3.11 ADJUSTING

3.12 CLEANING

A. Remove rubbish, debris, and waste materials and legally dispose of off the project site.

3.13 DEMONSTRATION

3.14 PROTECTION

3.15 SCHEDULES

A. Concrete Paving Finish

1. Light Broom Finish
   a. Gutters, 3-inch wide steel trowel finish at flow lines

2. Medium Broom Finish
   a. Walks and pavement surfaces sloped between 0.00% and 5.99%, texture perpendicular to direction of traffic
   b. Stair treads and landings
   c. Onsite drive aprons

3. Heavy Broom Finish
   a. Walks and pavement surfaces sloped between 6.00% and 8.33%, texture perpendicular to direction of traffic

END OF SECTION

SECTION 32 17 23
PAVEMENT MARKINGS

PART 1 GENERAL

1.01 SUMMARY
- A. Section Includes
  1. Parking stripes, markings, and accessibility symbols
  2. Exterior athletic court markings (Excluding Tennis Courts)
  3. Playground markings
  4. Fire lane markings
- B. Products Supplied But Not Installed Under This Section
- C. Products Installed But Not Supplied Under This Section
- D. Related Sections
  1. 09 91 13 Exterior Painting
  2. 32 12 16 Asphalt Paving
  3. 32 13 13 Concrete Paving
- E. Allowances
- F. Unit Prices
- G. Measurement Procedures
- H. Payment Procedures
- I. Alternates

1.02 REFERENCES
- A. The "Greenbook", Standard Specifications for Public Works Construction, current edition, (S.S.P.W.C.)
- B. C.C.R., Title 24, Part 2, Chapter 11B
- C. C.C.R., Title 24, Part 11, 5,504.4.3 Paints and Coatings

1.03 DEFINITIONS

1.04 SYSTEM DESCRIPTIONS
- A. Design Requirements, Performance Requirements
  1. All specified construction materials and construction methods shall comply with the "Greenbook", Standard Specifications for Public Works Construction, current edition.

1.05 SUBMITTALS
- A. Product Data
  1. Submit product data for each type of product. Include preparation requirements and application instructions.
- B. Shop Drawings
  1. Submit scale drawings indicating location, extent, color, and texture of markings.
- C. Samples
  1. Submit samples for initial selection
  2. Submit samples for verification that in each color and gloss topcoat.
     - a. Submit samples on rigid backing, no smaller than 7" x 10" or larger than 8.5" x 11"
     - b. Label each sample for project, architect, contractor, paint color name and number, and paint brand
- D. Quality Assurance/Control Submittals

1. Design Data, Test Reports, Certificates, Manufacturers' Instructions, Manufacturers' Field Reports, Qualification Statements
    a. Printed statement of VOC Content
    b. Documentation indicating the paints and coatings meet the testing and product requirements of the California Department of Health Services' "Standard Practice for the Testing of Volatile Organic Emissions from Various Sources Using Small-Scale Environmental Chambers."

E. Closeout Submittals

1.06 QUALITY ASSURANCE

A. Qualifications

B. Regulatory Requirements

1. Accessible parking spaces serving a particular building or facility shall be located, and dispersed if serving more than one accessible entrance, on the shortest accessible route to an entrance or to multiple accessible entrances. **CBC Sections 11B-208.3.1**
2. Accessible parking spaces in a parking facility not serving a particular building or facility shall be located on the shortest accessible route to an accessible pedestrian entrance of the parking facility. **CBC Sections 11B-208.3.1**
3. Minimum number of required accessible parking spaces shall be provided in accordance with **CBC Table 11B-208.2** for each parking facility provided.
4. For every six or fraction of six accessible parking spaces, at least one shall be an accessible van parking space. **CBC Section 11B-208.2.4**
5. Accessible parking spaces and access aisles shall comply with **CBC Section 11B-502** and shall be dimensioned to the centerline of the marked lines as follows:
    a. Parking spaces and access aisles shall be marked according to **CBC Figures 11B-502.2, 11B-502.3**, and **11B-502.3.3**. Their surfaces shall comply with **CBC Section 11B-302** and shall be at the same level with slopes not steeper than 1:48 in any direction. **CBC Section 11B-502.4.**
    b. Parking spaces shall be 9'x18' minimum and van parking spaces shall be 12'x18' minimum with an adjacent access aisle of 5'x18' minimum. Access aisles shall be placed on either side of the parking spaces except be located on the passenger side for van parking spaces. Van parking spaces shall be permitted to be 9'x18' minimum where the access aisle is 8'x18' minimum.
    c. Access aisles shall be marked by a blue painted borderline around their perimeter. The area within the blue borderlines shall be marked with hatched lines a maximum of 36" on center in a color contrasting with that of the aisle surface, preferably blue or white. Access aisle markings may extend beyond the minimum required length. **CBC Section 11B-502.3.3**
    d. Access aisles (parking spaces as well -similar application) shall not overlap the vehicular way. **CBC Section 11B-502.3.4**

e. A vertical clearance of 8'-2" minimum shall be provided for accessible parking spaces, access aisles, and vehicular routes serving them. **CBC Section 11B-502.5**

6. At least one passenger loading zone shall be provided in every continuous 100 linear feet of loading zone space, or fraction thereof, complying with **CBC Sections 11B-209** and **11B-503** as follows:
   a. Vehicle pull-up spaces shall be 8'x20' minimum. Access aisles shall be 5'x20' minimum and shall be adjacent and parallel to the vehicular pull-up spaces. They shall be at the same level with slopes not steeper than 1:48 in any direction. **CBC Section 11B-503.4**
   b. Access aisles for passenger drop-off and loading zone shall be marked with a painted borderline around their perimeter. The area within the borderlines shall be marked with hatched lines a maximum of 36" on center in a color contrasting with that of the aisle surface. **CBC Section 11B-503.3**
   c. A vertical clearance of 9'-6" minimum shall be provided for vehicle pull-up spaces, access aisles, and a vehicular route serving them connecting a vehicular entrance and a vehicular exit. **CBC Section 11B-503.5**

C. Certifications
D. Field Samples
E. Mock-ups
F. Pre-installation Meetings

1.07 DELIVERY, STORAGE, AND HANDLING
A. Packing, Shipping, Handling, and Unloading
B. Acceptance at Site
C. Storage and Protection
   1. Store materials not in use in tightly covered containers in well-ventilated areas with ambient temperatures continuously maintained at not less than 45 deg. F or more than 120 deg. F.
   2. Maintain containers in clean condition, free of foreign materials and residue.
   3. Remove rags and waste from storage areas daily.
D. Waste Management and Disposal
   1. See Section 01 74 00 Cleaning and Waste Management

1.08 PROJECT CONDITIONS
A. Project Environmental Requirements
   1. Apply paints only when temperature of surfaces to be painted and ambient air temperatures are between 50 and 105 deg F.
   2. Do not apply paints when relative humidity exceeds 85 percent; at temperatures less than 5 deg F above the dew point; or to damp or wet surfaces.
   3. Painting contractor should follow proper painting practices and exercise judgment based on his or her experience and project specific conditions as to when to proceed.

1.09 SEQUENCING
1.10 SCHEDULING

1.11 WARRANTY
1.12 SYSTEM STARTUP
1.13 OWNER'S INSTRUCTIONS
1.14 COMMISSIONING
1.15 MAINTENANCE
- A. Extra Materials
  - 1. Furnish extra materials from the same product run that match products installed and are packaged with protective covering for storage and identified with labels describing content.
    - a. Paint 5% but not less than 5 gal of each material and color applied.

PART 2 PRODUCTS

2.01 MANUFACTURERS
- A. Dunn-Edwards Corporation, 4885 E. 52nd Place, Los Angeles, CA 90058, or equal.

2.02 EXISTING PRODUCTS
2.03 MATERIALS
- A. (Dunn Edwards) Vin-L-Stripe Zone Marking paint

2.04 MANUFACTURED UNITS
2.05 EQUIPMENT
2.06 COMPONENTS
2.07 ACCESSORIES
2.08 MIXES
2.09 FABRICATION
2.10 FINISHES
2.11 SOURCE QUALITY CONTROL

PART 3 EXECUTION

2.01 INSTALLERS
3.02 EXAMINATION
- A. Site Verification of Conditions
  - 1. In accordance with S.S.P.W.C., Section 314.

3.03 PREPARATION
- A. Protection
- B. Surface Preparation
  - 1. In accordance with S.S.P.W.C., Section 314.
  - 2. Prior to application of paint, allow the pavement to properly cure.
  - 3. Clean and prepare in accordance with paint manufacturer's written recommendations.

3.04 ERECTION
3.05 INSTALLATION
3.06 APPLICATION
- A. In accordance with S.S.P.W.C., Section 314.
- B. Provide mechanical equipment to apply paint in a uniform, straight or curved pattern, without gaps, wobbles, holidays, runs, or other defects.

C. Apply minimum two coats in thickness or as recommended by manufacturer.

3.07 CONSTRUCTION
3.08 REPAIR/RESTORATION
3.09 RE-INSTALLATION
3.10 FIELD QUALITY CONTROL
3.11 ADJUSTING
3.12 CLEANING
3.13 DEMONSTRATION
3.14 PROTECTION

A. Do not permit traffic until paint has completely cured.

3.15 SCHEDULES

LOCATION	WIDTH	COLOR
Parking Stall Lines	3″	White
Traffic Markings		
Striping	3″	White
General	3″	White
Accessible Parking	3″	Blue*/White
International Symbol of Accessibility (ISA)	2″	Blue*/White
Athletic Court Lines	2″	Black
Letters and Numbers	As Detailed	Black

* Federal Standard 595B, No. 15090

END OF SECTION

SECTION 32 31 13
CHAIN LINK FENCES AND GATES

PART 1 GENERAL

1.01 SUMMARY

A. Section Includes
   1. Materials and installation methods for chain link fences and gates
      a. Galvanized steel coated chain link fabric
      b. Galvanized steel framework and fittings
      c. Galvanized steel gates

B. Products Supplied But Not Installed Under This Section

C. Products Installed But Not Supplied Under This Section

D. Related Sections
   1. 09 97 13 Steel Coatings
   2. 32 13 13 Concrete Paving

E. Allowances

F. Unit Prices

G. Measurement Procedures

H. Payment Procedures

I. Alternates

1.02 REFERENCES

A. ASTM A392 Specification for Zinc-Coated Steel Chain-Link Fence Fabric

D. ASTM A780 Standard Practice for Repair of Damaged and Uncoated Areas of Hot-Dip Galvanized Coatings

B. ASTM A824 Specification for Metallic-Coated Steel Marcelled Tension Wire for Use With Chain Link

C. ASTM F552 Standard Terminology Relating to Chain Link Fencing

D. ASTM F567 Standard Practice for Installation of Chain Link Fence

E. ASTM F626 Specification for Fence Fittings

G. ASTM F900 Specification for Industrial and Commercial Swing Gates

I. ASTM F1043 Specification for Strength and Protective Coatings of Metal Industrial Chain Link Fence Framework

J. ASTM F1083 Specification for Pipe, Steel, Hot-Dipped Zinc-Coated (Galvanized) Welded, for Fence Structures

L. CLFMI WLG2445 Chain Link Fence Wind Load Guide for the Selection of Line Post and Line Post Spacing

M. UL 325 Door, Drapery, Gate, Louver and Window Operators

N. The “Greenbook” Standard Specifications For Public Works Construction, Latest Edition

1.03 DEFINITIONS

A. Chain Link Fabric: A fencing material consisting of wire helically wound and interwoven in such manner as to provide a continuous mesh without knots or ties except in the form of knuckling or twisting at the top and bottom of the mesh to from the fabric selvage.

B. Selvage: The top and bottom edge finish on woven chain link formed by joining adjacent pairs of wire pickets. The selvage may be knuckled or twisted.

C. Knuckled Selvage: Refers to bending the adjacent pairs of wire back into a tight loop.

D. Twisted Selvage: Refers to twisting the adjacent pairs of wire together in a close helix of 1-1/2 machine turns, which is equivalent to three full twists.
E. Mesh Size: The minimum clear distance between the wires forming the parallel sides of the mesh.
F. Terminal Post: A post to which the chain link fabric is terminated using specific fittings; end post, corner post, gate post, and pull post.
G. Pull Post: A terminal post used to accommodate a grade or placed at intervals on long stretches of fence.
H. Line Post: Intermediate posts set no greater than 10 feet on center between the terminal posts.

1.04 SYSTEM DESCRIPTIONS

1.05 SUBMITTALS

A. Product Data
   1. Submit manufacturers' product data for products specified.
B. Shop Drawings
   1. Submit a scaled site plan showing layout of fence location with dimensions, location of gates and opening size, cleared area, elevation of fence and gates, detail of attachments and footings.
   2. Submit a scaled elevation for each gate assembly indicating all gate hardware.
C. Samples
   1. Submit samples from manufacturers' full range of colors for products specified.
D. Quality Assurance/Control Submittals
   1. Design Data, Test Reports, Certificates, Manufacturers' Instructions, Manufacturers' Field Reports, Qualification Statements
      a. Submit manufacturers' material certifications in compliance with current ASTM specifications.
      b. Submit manufacturers' certification of active membership with the Chain Link Manufacturers Institute.
      b. Submit material certifications, made in U.S.A., Buy American Act or Buy America when required.
E. Closeout Submittals

1.06 QUALITY ASSURANCE

A. Qualifications
   1. Manufacturer: Company operating in the United States having U.S. manufacturing facility/facilities specializing in manufacturing chain link fence products with at least 5-years' experience.
   2. Manufacturer shall be an active member of the Chain Link Fence Manufacturers Institute.
   2. Fence contractor: Company with demonstrated successful experience installing similar projects and products in accordance with ASTM F567 and have at least 5-years' experience.
B. Regulatory Requirements
   1. Gates that are of the accessible routes, clear floor or ground spaces, and turning spaces for play areas shall comply with **CBC Section 11B-404**.
   2. The lever of lever actuated latches or locks for an accessible gate shall be curved with a return to within ½-inch of the (face of) gate to prevent catching on the clothing or persons. **California**

Referenced Standards code. T-24 Part 12, Section 12-10-202, Item (F).

3. Swing doors and gate surfaces within 10-inches of the finish floor or ground shall have a smooth surface on the push side extending the full width of the door or gate. Parts creating horizontal or vertical joints in these surfaces shall be within 1/16-inch of the same plane as the other and be free of sharp or abrasive edges. Cavities created by added kick plates shall be caped. **CBC Section 11B-404.2.10**.

C. Certifications
D. Field Samples
E. Mock-ups
F. Pre-installation Meetings

1.07 DELIVERY, STORAGE, AND HANDLING
A. Packing, Shipping, Handling, and Unloading
1. Deliver products to site per contract documents
B. Acceptance at Site
C. Storage and Protection
1. Store and protect products off the ground
D. Waste Management and Disposal

1.08 PROJECT CONDITIONS
1.09 SEQUENCING
1.10 SCHEDULING
1.11 WARRANTY
1.12 SYSTEM STARTUP
1.13 OWNER'S INSTRUCTIONS
1.14 COMMISSIONING
1.15 MAINTENANCE

PART 2 PRODUCTS

2.01 MANUFACTURERS
A. Chain Link Fence and Gates
1. Any active member of the Chain Link Manufacturers Institute
B. Privacy Slats
1. PrivacyLink, P.O. Box 295, Hyde park, Utah 84318 or equal.
2. Pexco, 2500 Northwinds Pkwy, Suite #472, Alpharetta, GA 30009

2.02 EXISTING PRODUCTS
2.03 MATERIALS
A. Zinc Coated Chain Link Fence and Gates
1. Steel Fabric
a. ASTM A392 hot dipped galvanized after weaving.
b. Class 2: 2 oz/sf
c. Mesh Size: See Drawings
d. Gauge: 9
e. Height: See drawings
f. Selvage: K&K (Knuckle Top & Bottom)
2. Steel Fence Framework and Gate Posts
a. Pipe Diameter: See drawings

b. Round Steel Pipe and Rails: ASTM F1043 Group IA, Regular Strength Grade, 30,000 psi yield, Schedule 40 galvanized pipe per ASTM F1083 unless noted otherwise on drawings.
c. Coating: Hot-Dip Galvanize process

3. Tension Wire
   a. Core Wire Gauge: 7 gauge marcelled steel wire complying with ASTM A824
   b. Coating: Type II Zinc-Coated Class 5 – 2.0 oz/sf
4. Fittings
   a. Tension and Brace Bands
      1. Galvanized pressed steel complying with ASTM F626, minimum steel thickness of 12 gauge, minimum width of ¾-inch and minimum zinc coating of 1.20 oz/sf.
      2. Bands supplied with 5/16-inch or 3/8-inch galvanized steel carriage bolts.
   b. Terminal Post Caps, Line Post Loop Tops, Rail and Brace Ends, Rail Sleeves
      1. In compliance with ASTM F626, pressed steel galvanized after fabrication having a minimum thickness zinc coating of 1.20 oz/sf.
   c. Truss Rod Assembly
      1. In compliance with ASTM F626, 3/8" diameter steel truss rod with a pressed steel tightener, minimum zinc coating of 1.2 oz/sf, assembly capable of withstanding a tension of 2,000 lbs.
   d. Tension Bars
      1. In compliance with ASTM F626, Galvanized steel one-piece length 2-inches less than the fabric height, minimum zinc coating 1.2 oz/sf
      2. Bars for 2-inch mesh shall have a minimum cross section of 3/16-inch by ¾-inch.
      3. Bars for 1-inch mesh shall have a minimum cross section of 1/4-inch by 3/8-inch
5. Tie Wire and Hog Rings
   a. Tie wire and hog rings per ASTM F626
   b. 6-gauge aluminum alloy ties
   c. 6-gauge aluminum alloy hog rings
6. Gates
   a. Size: See Drawings
   b. Galvanized steel welded fabrication in compliance with ASTM F900.
   c. Gate Frame Members: ASTM F1043 Group IA, Regular Strength Grade, 30,000 psi yield, Schedule 40 galvanized pipe per ASTM F1083 unless noted otherwise on drawings.
   d. Welded joints protected by applying zinc-rich paint in accordance with ASTM Practice A780. See 09 97 13 Steel Coatings.
   e. Fabric: Match fence fabric
   f. Hinges: See Drawings
   g. Latch/Lever: See Drawings
   h. Additional Hardware: See Drawings

2.04 MANUFACTURED UNITS
2.05 EQUIPMENT
2.06 COMPONENTS
2.07 ACCESSORIES
- A. Concrete
  - 1. See 32 13 13 Concrete Paving
- B. Privacy Slats
  - 1. (PrivacyLink) Bottom Locking Double Wall Slats
    - a. Height: Match height of fence
    - b. Color: As selected by Architect from manufacturer's standard color options
  - 2. (Pexco) Bottom-Lock
    - a. Height: Match height of fence
    - b. Color: As selected by Architect from manufacturer's standard color options

2.08 MIXES
2.09 FABRICATION
2.10 FINISHES
2.11 SOURCE QUALITY CONTROL

PART 3 EXECUTION

3.01 INSTALLERS
3.02 EXAMINATION
3.03 PREPARATION
- A. Protection
- B. Surface Preparation
  - 1. Surveying, clearing, grubbing, grading and removal of debris for the fence line or any required clear areas adjacent to the fence not included in the earthwork contractor's contract is the responsibility of the fence contractor in accordance with the provisions of 'The "Greenbook" Standard Specifications For Public Works Construction', Latest Edition, Part 3 – Construction Methods and ASTM F567, current edition.

3.04 ERECTION
3.05 INSTALLATION
- A. Framework
  - 1. Posts
    - a. Posts shall be set plumb in concrete footings in accordance with ASTM F567.
    - b. Minimum footing depth, 24-inches plus an additional 3-inches for each 1-foot increase in the fence height over 4-feet unless noted otherwise on drawings.
    - c. Minimum footing diameter four times the largest cross section of the post up to 4.00-inch O.D. and three times the largest cross section of post greater than 4.00-inch. O.D., unless noted otherwise on drawings.
    - d. Minimum gate posts footings per ASTM F567 unless noted otherwise on drawings.

e. Top of post concrete footing to be 6-inches below finish grade unless detailed otherwise on drawings.

2. Top rail
   a. Install 21 ft. lengths of rail continuous thru the line post or barb arm loop top, unless detail otherwise.
   b. Splice rail using top rail sleeves minimum 6 in. long.
   c. The rail shall be secured to the terminal post by a brace band and rail end.
   d. Bottom rail and intermediate rail shall be field cut and secured to the line posts using rail ends and brace bands. Boulevard bands will shall not be permitted.
3. Terminal posts
   a. End, corner, pull and gate posts shall be braced and trussed for fence 6 ft. and higher.
   b. The horizontal brace rail and diagonal truss rod shall be installed in accordance with ASTM F567.
4. Tension wire (When detailed on drawings)
   a. Shall be installed 4-inches up from the bottom of the fabric.
   b. Fences without top rail shall have a tension wire installed 4-inches down from the top of the fabric.
   c. Tension wire to be stretched taut, independently and prior to the fabric, between the terminal posts and secured to the terminal post using a brace band.
   d. Secure the tension wire to the chain link fabric with 9-gauge hog rings 18-inches on center and to each line post with a tie wire.

B. Chain Link Fabric
1. Chain Link Fabric
   a. Install fabric to outside of the framework.
   b. Attach fabric to the terminal post by threading the tension bar through the fabric
   c. Secure the tension bar to the terminal post with tension bands and carriage bolts spaced no greater than 12-inches on center.
   d. Chain link fabric to be stretched taut free of sag.
   e. Fabric to be secured to line post, top rail, intermediate rail, and bottom rail with tie wires spaced no greater than 12-inches on center to posts and spaced no greater than 18-inches on center to rails with aluminum alloy wire ties. Ties shall be wrapped around the post or rails and attached to a fabric wire picket on each side of the post or rail by twisting the tie wire around the fabric wire picket two full turns per ASTM F567.
   f. (When detailed on drawings) Secure fabric to the tension wire with hog rings spaced no greater than 18 inches on center.
   g. Excess wire shall be cut off and bent over to prevent injury.
   h. Installed fabric shall have a ground clearance of no more than 2-inches.

C. Swing Gates
1. Install gates and gate posts in compliance with ASTM F567.
2. Gates shall be plumb in the closed position.

3. Gates shall have a bottom clearance of 3-inches in the closed position, unless detailed otherwise on the drawings.
3. Hinge and latch offset opening space from the gate frame to the post shall be no greater than 3-inches in the closed position.
4. Double gate drop bar receivers shall be set in a concrete footing minimum 6-inches diameter by 24-inches deep.

D. Horizontal Slide Gates
1. Install in accordance with ASTM F567
2. Gates shall be plum in the closed position.
3. Gates 48-inches and smaller in clear opening width shall be installed to slide with an initial pull force no greater than 5 lbs.
3. Gates larger than 48-inches in clear opening width shall be installed to slide with an initial pull force no greater than 40 lbs.

E. Nuts and Bolts
1. Carriage bolts used for fittings shall be installed with the head on the secure side of the fence.
2. All bolts shall be tack-welded to prevent removal of the nut.

F. Privacy Slats
1. Install per manufacturer's installation instructions.

3.06 APPLICATION
3.07 CONSTRUCTION
3.08 REPAIR/RESTORATION
3.09 RE-INSTALLATION
3.10 FIELD QUALITY CONTROL
3.11 ADJUSTING
3.12 CLEANING
A. The area of the fence shall be left neat and free of any debris caused by the installation of the fence.

3.13 DEMONSTRATION
3.14 PROTECTION
3.15 SCHEDULES

END OF SECTION

SECTION 32 84 00
IRRIGATION SYSTEMS

PART 1 GENERAL

1.1 DESCRIPTION

A. Work of this Section includes the furnishing, adjusting, installing, and testing of mains, laterals, risers and fittings, quick couplers, gate valves, excavation and backfill, and all other work in accordance with the plans and specifications for a complete operating system. All work shall be in accordance with applicable City and County codes, and these plans/specifications

1.2 RELATED DOCUMENTS

A. The work of this Section shall conform to the “GREENBOOK Standard Specifications for Public Works Construction," latest edition, Section 212, except as modified herein.

B. Drawings and general provisions of the Contract, including General and Special Conditions and other Division 1 Specification Sections, apply to this Section.

C. Related Work Described Elsewhere:

Division 01 for Special Project Procedures
Section 331100 - Water Utility Distribution Piping
Section 312000 – Earth Moving
Section 311000 - Site Clearing
Section 32 93 00 - Planting
Section 329400 - Tree Protection and Trimming

1.3 SUBMITTALS

A. Submit within five (5) days after award of the Contract, and before any materials of this Section have been delivered to the job site, a list of irrigation equipment to be used, accompanied by and including but not limited to manufacturer's catalog data, specifications, or other literature clearly indicating compliance with specification requirements for each item. Cut sheets to be in color and sent in PDF format. Catalog data shall be accompanied with a cover sheets, on company letter head, typewritten, with the following minimum format requirement for all items in submittal:

ITEM NO.	DESCRIPTION	MANUFACTURER	MODEL NO.

B. The manufacturer's recommended methods of installation which, when recommended for approval by the Landscape Architect, shall become the basis for review and accepting or rejecting actual installation methods used on the work when not otherwise specified or detailed.

C. Should the Contractor propose to use materials or equipment other than those listed within the construction documents, he/she shall submit a formal substitution request including cut sheet and samples of the make and type proposed and product specified within construction documents for comparison purposes. Samples shall be submitted a sufficient time in advance of the start of construction to allow a period of not less than seven (7) days for testing and recommended approval. Substitution of any product, material, or equipment without prior, written approval will not be permitted or as otherwise indicated by General Conditions and Special Conditions and other Division 1 Specifications. Any attempted substitutions submitted within the submittal package shall not be permitted regardless if the submittal package has been marked no exceptions taken or otherwise.

1.4 QUALITY ASSURANCE

A. Conform to the requirements of the reference information listed below except where more stringent requirements are shown or specified in the most current set of construction documents:

1. American Society for Testing Material (ASTM), for test methods specifically referenced in this section.
2. Underwriter's Laboratories (UL), for UL wires and cables.
3. Electrical Components, Devices, and Accessories: Listed and labeled as defined in CEC, Article 100, by a testing agency acceptable to authorities having jurisdiction.
4. Comply with requirements of local Water Purveyor for preventing backflow and back-siphonage.
5. Comply with ASTM F 645, "Guide for Selection, Design, and Installation of Thermoplastic Water Pressure Piping Systems."
6. Comply with CEC, " California Electrical Code," for electrical connections between wiring and electrically operated devices.
7. Furnish plastic pipe and fittings permanently marked with size, class, and type of pipe, working pressure at 73.4 degrees F, and National Sanitation Foundation (NSF) rating.
8. Conform to California Code of Regulations, Title 23, Division 2, Chapter 2.7, Model Water Efficient Landscape Ordinance.

B. A nameplate or tag bearing manufacturer's name or trademark including model number, shall be securely affixed in a conspicuous place on equipment. In addition, the model number shall be either cast integrally with equipment, stamped, tag or otherwise permanently marked on each item of equipment.

C. Qualifications: Work shall be performed by skilled workers with a minimum of five (5) years' experience in work of similar scope and complexity. Company shall hold a current valid C-27 License and be sufficiently bonded for project size.

D. The Contractor shall maintain, continuously, a competent superintendent or foreman, who shall be present at all times during execution of this portion of the work and who shall be thoroughly familiar with the type of materials being installed and the materials manufacturer's recommended methods of installation, and who shall direct all work performed under this Section. The superintendent shall be authorized to represent the Contractor.

E. Prior to commencement of work, contractor shall verify drawing dimensions with actual field conditions, and exact location of irrigation water meter - point of connection provided by others. Verify existing pressure at point of connection, coordinate location and installation of new main line. Immediately report to the Landscape Architect and/or Owner all conditions, which prevent proper execution of this work.

F. All assemblies specified herein shall be installed in accordance with the respective details. In the absence of detail Drawings or specifications pertaining to the specific items required to complete the work, the Contractor shall perform such work in accordance with the best standard practice and to the satisfaction of the Landscape Architect.

G. Irrigation Contractor is responsible for replacing or repairing any acts of theft or vandalism during construction and the maintenance period.

H. The Contractor shall obtain and pay for all permits and inspections required by outside agencies. For recycled water applications, contractor shall be required to coordinate and conduct pre-construction meeting, onsite inspections during construction and upon completion of project, be required to provide a shut-down/ cross connection test with the water department inspector, as required by said water purveyor.

I. Code Requirements shall be those of State and Municipal Codes and Regulations locally governing this work, providing that any requirements of the Drawings and Specifications, not conflicting therewith but exceeding the Code Requirements shall govern, unless written permission to the contrary is granted by the Architect.

J. Due to the scale of Drawings, it is not possible to indicate all offsets, fittings, sleeves, etc., which may be required. Carefully investigate the structural and finished conditions affecting all of this work and plan this work accordingly, furnishing such fittings, etc., as may be required to meet such conditions. Drawings are generally diagrammatic and indicative of the work to be installed. The work shall be installed in such a manner as to avoid conflicts between irrigation systems, planting, plumbing, drainage, sewer and architectural features.

K. Permission to shut off any irrigation lines must be obtained from the Owner. Disruption of existing systems and services shall be kept to a minimum. Water shall not be turned off for a period longer than 48 hours which supplies plant material to remain and be protected in place, or contractor shall hand water material at contractor's expense.

1.5 DELIVERY, STORAGE AND HANDLING

A. Protection: Use all means necessary to protect the materials of this Section before, during, and after installation and to protect the work and materials of all other trades. Exercise caution in handling, loading and storing of plastic pipe and fittings to avoid damage. Protect valves, fittings, and specialties from moisture, dirt, and other possible contaminants.

B. Delivery: Polyvinyl chloride pipe shall be delivered to the work site in unbroken bundles or rolls packaged in such a manner as to provide adequate protection for the pipe ends, threaded or plain. Transport pipe with the entire length of pipe lying flat. Support pipe during storage from sagging and bending. Store plastic piping protected from direct sunlight.

C. Replacements: In the event of damage, immediately make all repairs and replacements necessary to the recommended approval of the Landscape Architect and at no additional cost to the Owner. Discard pipe that has been dented or damaged unless such dent or damaged section is cut and rejoined with a coupling.

1.6 SEQUENCING AND SCHEDULING

A. Install landscape headers, sidewalks, and mowing strips before installation of sprinkler system. Sleeves and mainlines under paving shall be in place before paving construction.

B. Specimen trees (24 inches box and larger) shall be planted before locating the irrigation system.

C. Coordinate all pressure mainlines, lateral lines, and emission device installation with utility work.

D. Obtain permission, in writing, from the Owner/Owner's Rep. at least 2 working days before shutting off existing in-use water lines. Contractor shall receive instructions from the Owner/ Owner's Rep. as to the exact length of time of each shut-off. Notify the Landscape Architect of said intent in writing of said intent.

1.7 WARRANTY

A. The irrigation system shall be guaranteed/ warrant against defects and guarantee workmanship including but not limited to settlement of trenches, valve operation, controller function, booster pump, etc. for a period of one (1) year following formal issuance of substantial completion by Owner and Landscape Architect. Contractor shall be responsible for coordinating warranty items with Manufacturer/ Distributor/ Supplier and the Owner/ Owners Rep.

B. Provide a Five (5) year minimum Warranty on all controller and booster pump units.

C. Repairs by Owner: The Owner retains the right to make emergency repairs without relieving Contractor's guarantee obligation. In the event the Contractor does not respond to the Owner's request for repair work under this guarantee, within a period of 48 hours, the Owner may make such repairs as Owner may deem necessary and Contractor shall reimburse Owner the full expense of such repairs.

1.8 RECORD DOCUMENTS

A. Operations & Maintenance Manuals and Certifications:

1. Submit Two individually bound "Operating and Maintenance Manuals" detailing operation and maintenance requirements for irrigation systems to the Owner/ Owners rep. prior to requesting field observation walk for Substantial Completion. Manuals shall be subject to approval by the Owner/ Owners rep for completeness. Manuals to include the following:
   a. Index sheet, stating Irrigation Contractor's name, address, telephone number and name of contact person.
   b. Indicate component manufacturers warranties with the manufacturer's Name and address including the local manufacturer's representative. Include length of warranty and how to exercise warranty on all valves, irrigation controllers, booster pumps, flow sensors and emission devices, etc.
   c. Duration of guarantee period, including all manufacturer's guarantees or warranties. Minimum requirement is 1 year, regardless of manufacturer's warranty time frame.
   d. Operation manuals and cut sheets of all installed materials and systems in sufficient detail to permit maintenance personnel to understand, operate and maintain the equipment.
   e. Backflow preventer certification and registration.
   f. Booster pump certification letter from the equipment supplier along with warranty data sheet
   g. Controller certification letter from the equipment supplier along with warranty data sheet
   h. Complete large-scale drawings of all installed equipment (within accordance of record documents and controller charts below)

B. Record Documents:

1. The Contractor shall provide and keep up to date on a daily basis, a complete record set of bond copies in black and white which shall be corrected daily and show every change from the original Drawings and specifications and the exact locations, sizes and kinds of equipment in red ink. Prints for this purpose may be obtained from the Owner or landscape Architect at cost. This set of Drawings shall be kept on the site and shall be used only as a record set.
2. The contractor shall dimension from a minimum of two (2) permanent points of reference, building corners, sidewalks, etc., the location of the following items:
   a. Water meters.
   b. Pump stations.
   c. Backflow prevention devices.
   d. Pressure regulators.
   e. Master valves / Flow sensors.
   f. Fertilizer injectors.
   g. Connection to existing water lines.
   h. Isolation gate valves.
   i. Isolation ball valves.
   j. Routing of pressure supply lines at every 100 feet along routing, changes in direction.
   k. Quick coupling devices.
   l. Air release valves.
   m. Electric control valves.
   n. Check valves.
   o. Controllers / Field satellite units
   p. Grounding rods / Ground Plates.
   q. Control wire routing (if routed separately from pressure supply line).
   r. Communication cable routing (if routed separately from pressure supply line).
   s. Communication cable and control wire splices of any kind.
   t. Any valve boxes which are not part of references noted above with demarcation of items inside (flush valves, indicator stakes, surge protectors, etc.).
   u. Other equipment as directed by Owner/ Owner's Rep or Landscape Architect.
3. All record drawings shall be prepared using AutoCAD 2013 or newer drafting software with the original Irrigation drawings provided by the landscape Architect or Owner's representative as

the bases of starting point. No hand drafting shall be permitted for final product. Final product shall be provided in both PDF format and in AutoCAD 2013 or newer on a flash drive or emailed as requested by Owner and 1 set printed on reproducible Bond copy of same size as original drawings. Mark on set "As-Built" in bold letters at lower tight hand part of the page(s).

4. Prior to scheduling a walk through for Substantial Completion, provide a record set of field drawings as described above to the Owner's/ Owners rep and Landscape Architect for review. After review, the Owner's representative will return the set to the field foreman requesting further information or will notify that the record set of field drawings are complete. Upon approval, a walk through for Substantial Completion may be scheduled. At the discretion of the owner and landscape Architect, contractor may pick-up comments during maintenance period and provide final set prior to release of maintenance.

C. Controller Charts:

1. Provide two (2) controller charts for each automatic controller installed onsite. Chart shall show the area covered by said controller. The areas covered by the individual control valves shall be indicated using colored highlighter pens or performed digitally in computer software using a minimum of eight (8) colors. Owner/ Owner's Representative and Landscape Architect must approve record drawings prior to charts being prepared for final copy.
2. The chart is to be reduced to half size of the original record drawing and reviewed for legibility. In the event the controller chart is illegible, larger size shall be provided.
3. Once controller chart is completed and approved by Landscape Architect and Owner, the charts shall be hermetically sealed between two pieces of plastic, each being a minimum 20-mils in thickness and one (1) copy placed in controller(s) and one (1) copy included in the operations and maintenance manuals.

1.9 EXTRA EQUIPEMENT

A. Prior to end of maintenance period, the contractor shall furnish the following extra materials to the district:

1. One (1) operating key shall be furnished for each type of gate valve installed (cross handle and square handle).
2. Two (2) quick coupler keys with matching swivels with ¾" male hose thread for each twenty-five (25) quick couplers installed on project.
3. Six (6) spare keys for each enclosure lock used.
4. Two (2) sets of the required specialty tools for removing, disassembling and adjusting each type of rotor, sprinkler head, isolation valve, and electric control valve used on the project. This shall include, but not limited to; nozzle adjustment / removal tool, small screwdriver for spray nozzle adjustment, arc adjustment key / screwdriver, insertion collar for pop-up rotor head repairs, locking cover key for QCV's, channel lock pliers, universal screwdriver, and nut driver for valve box bolts.
5. Twelve (12) of each type of emission device with inserts for each type size and series installed including but not limited to sprinkler heads, rotors, bubblers, including each type of nozzle specified and accompanying connection to lateral line (swing joint, riser, etc.)

1.10 TRAINING

A. Before substantial completion provide at least 4 hours of training, by an authorized representative of the controller & Booster Pump manufacturer, for each type of irrigation controller & Booster Pump installed.

B. Instruct designated Owner personnel on operation and programming of the irrigation controller and hand-held controller, demonstrating program features and setting up/ programming controller with any online features and access.

C. Review "As-Built" plans with Owner's personnel and explain the following features: master valve, flow sensor, rain sensors, pump, backflow devices and locations of critical valves.

D. Provide an attendance sheet to the Owner listing personnel trained.

PART 2 PRODUCTS

2.1 GENERAL

A. Irrigation materials and equipment shall be new, non, corroded, non-defective that meet specified standards.

2.2 PIPE

A. Manufacture from virgin polyvinyl chloride compound in accord with ASTM 1785, 2241, 2672 or 3139.; hydrostatic design stress rating not less than 2,000 psi.

B. Pressure Supply Lines (Mainline):

1. Pressure Supply Line (Mainline) shall be determined as follows:
   1" thru 1 ½" shall be Schedule 40, solvent weld ASTM D1785 & D2665
   2" to 3" shall be SDR13.5 (Class 315) solvent weld ASTM D22441
   4" and larger shall be bell and gasketed pipe SDR21 (class 200) by JM Eagle model Ring-Tite Joint or approved equal.
2. All threaded fittings shall be schedule 80 PVC
3. All 2"-3" pressure supply lines shall have thrust blocks. All ends, corners, etc. on mainline which is 2"-3" pipe which would receive thrust from the mainline shall have a thrust block.
4. All 4"+ pressure supply line shall utilize leemco self-restrained joint fittings in lieu of thrust blocks. Refer to manufacturer for typical lay length and installation instructions.

C. Non-pressure Lateral Lines:

1. Non-Pressure Lateral Lines: (downstream of electric remote-control valve) PVC Schedule 40, conforming to ASTM D1785-83.
2. Fittings: Standard weight, Schedule 40, injection molded PVC, complying with ASTM D1784 and D2466, cell classification 12454-B.
   a. Threads- Injection molded type (where required).
   b. Tees and Ells-side gated.
   c. Threaded Nipples: ASTM D2464, Schedule 80 with molded threads.
   d. Joint Cement and Primer: Type as recommended by manufacturer of pipe and fittings.

D. All pipe shall be continuously marked with: Manufacturers name, nominal size, PVC type, pressure rating, SDR, NSF seal, and date of extrusion.

E. Seamless copper water tube, ACT B88, Type "L", drawn temper per Irrigation Booster installation, Type "K" for all other applications.

F. Brass screwed pipe shall be red brass conforming to Federal Specification #WW-P-351.

G. All pressure supply lines under vehicular paving to be installed with a PVC Schedule 40 sleeve, the sleeve shall be a minimum of twice the irrigation line diameter and shall extend a minimum of twelve inches (12") beyond such pavement. All other Irrigation Lines Sleeve or Low Voltage Control Wire Sleeves shall be PVC Schedule 40 polyvinyl chloride.

H. Pipe manufactured more than two years before installation not permitted. All pipe shall have been protected for sun exposure during storage and installation.

I. Pipe which shows any sign that it has not been protected from exposure to sun at any time shall is not permitted.

2.3 FITTINGS

A. Pressure Supply Line:
   1. Fittings for Mainline pipe 1”-3” shall be Schedule 80 PVC Solvent Weld ASTM D 2464.
   2. Fittings for Mainline Pipe size 4” and larger shall be ductile iron, slanted, deep bell, gasket style made in accordance with ASTM A-536, Grade 65-45-12 & AWWA C153. self-restrained fittings as manufactured shall be as manufactured by Leemco, Inc.

B. Reducer tees will be used in cases of pipe size reduction. Bushing will only be allowed in cases of reduction where such a reducer tee is not manufactured.

C. Rigid PVC Nipples: ASTM D1785, Schedule 80, Type 1, molded threads.

D. Schedule 40 PVC street ells.

E. Brass: Red brass conforming to Federal Specification #WW-P-351. Schedule 40 threaded nipple stock, tees, ells, and unions.

F. Copper - Wrought solder-joints.

G. Cast Copper Flange Fittings conforming to ASTM B584/ANSI B16.18, max pressure rating: 300psi, Temp range-100 degree to 250 degrees.

H. Ductile Iron Flanged Fittings: ASTM A536-ANSI/AWWA C 110/A21.10, UL and FM requirements, pressure rating 250 psi rating for 1”-48” sizes and 150psi rating for 54” – 64”

2.4 FITTING CONNECTION

A. Solvent Cement: ASTM D2564 for PVC Pipe and fittings.

B. Use heavy body cement for Sch 80 fittings. Follow ASTM procedures for all pipe welding and installation. Use Teflon Tape at all fittings.

C. PVC Primer and Glue: Use in all cases as recommended by pipe and fittings manufacturer, including both pressure supply lines and non-pressure Lateral lines.
   1. IPS Weld -On P – 70, premium, industrial strength, low VOC primer
   2. IPS Weld -On 711, industrial grade, gray, low VOC emission, heavy bodied, medium setting, high strength PVC solvent cement
      a. No red hot blue glue/ fast setting no primer glue allowed.

D. PVC to metal joints shall be made with PVC Schedule 80 threaded fittings into galvanize with female adapter to PVC pipe. The PVC fitting shall be hand tightened, plus one turn with strap wrench. Joint compound shall be IPS weld on Teflon pipe joint compound or equal.

E. Metal-to-Metal joints: graphite and oil lubricant or Teflon paste on male threads only.

2.5 SLEEVE AND CONDUIT

A. For use under paving and hardscape as sleeves for irrigation pipe and conduit for control wire shall be PVC.
   1. All sizes shall be Sch. 40

B. Only standard lengths of pipe shall be used. Couple and weld only when length required is longer than a standard manufactured length.

C. See details for specifications of installation and as outlined by pipe manufacturer.

2.6 GALVANIZED PIPE AND FITTINGS

A. All galvanized steel pipe shall be Schedule 40, threaded, coupled and hot-dip galvanized, and shall comply with ASTM A120 and A53.

B. All fittings for galvanized steel pipe shall be 150 psi rated galvanized malleable iron, banded pattern.

C. Pipe sizes indicated on the Drawings are nominal inside diameter unless otherwise noted.

2.7 COPPER PIPE AND FITTINGS

A. Pipe: Type K, hard tempered.

B. Fittings: Wrought copper, solder joint type.

C. Joints shall be soldered with silver solder, 45% silver, 15% copper, 16% zinc, 24% cadmium, solidus at 1125 Degrees F. and liquidus at 1145 Degrees F.

2.8 BRASS PIPE AND FITTINGS

A. Brass pipe shall be 85% red brass, American National Standard Institute (ANSI), Schedule 40 screwed pipe.

B. Fitting shall be medium brass, screwed 125-pound class.

2.9 ISOLAVTION VALVES/ SHUT-OFF VALVES (GATE VALVES & BALL VALVES)

A. Isolation Gate Valve for use on mainline pipe 2” and 2-1/2” in size: Bronze, screw-in-bonnet, non-rising stem, cross handle, solid wedge, threaded connection valve as manufactured by Nibco model T-113-K, or equal.

B. Isolation Gate Valve for use on mainline pipe 3” and larger: Iron bolted bonnet with 2” square operating nut, non-rising stem, resilient wedge type, soft seat, flanged end epoxy coated, bronze trimmed iron body as manufactured by Nibco model F-619-RW-SON flanged, or equal.

2.10 CONTROL WIRE

A. All control wire shall be of the Underwriter's Laboratory type UF (underground feeder), single conductor, solid copper, plastic insulated, 600 volts rated, for direct burial applications. Maximum conductor operating temperature, 60 degrees C. for both wet and dry locations. Wire composition is as follows:

1. Conductor - the conductors shall be solid annealed uncoated copper meeting the applicable requirements of the latest revisions of ASTM B-3.
2. Insulation - the insulation shall be colored plastic which meets the test requirements of I.P.C.E.A. (The Insulated Power Cable Engineer's Association) Pub. No. S-61-402, dated July 1961, Section 3.7 for 60 degrees C. polyvinyl chloride insulation. The insulation shall be flame retardant, resistant to fungus, resistant to corrosive fumes, suitable for wet locations and furnish some degree of inherent protections against mechanical abuse. Insulation thickness shall be 47 mils for AWG #14, #12 & #10, and 62 mils for AWG #8.
3. Color Coding - The conductor insulation shall be color coded as follows:
   a. All common ground wire shall be white.
   b. All pilot (valve control) wire shall be black.
4. Wire Connectors
   a. 3m DBY/R Direct Burial Splice Kit, shall splice and effectively moisture seal two or more conductors. The electrical connector shall be a Scotchlok Y. The device shall be installed per manufacturer’s instructions and all applicable codes. The device shall be UL Listed as a Wire Connector System for use with Underground Conductors.

2.11 WIRE SPLICES

A. Conductors shall be installed with no underground splices, unless absolutely necessary and unavoidable. Any and all underground splices that are required to be made, must be approved by the Architect, and shall be placed in a suitable type valve box for easy access.

B. Wire splices on the two conductor cable communication wires shall be made with 3M DBY splice kit or approved equal.

C. Wire splices on the multi-conductor cable communication wires shall be made with Preformed Super Serviseal with Polybee sealant (product #8006039).

2.12 PULL BOXES

A. All pull boxes shall be Carson (concrete), or equal, for connection of conduit and route of communication and sensor cable. The pull box will have a cast iron lockable traffic lid.

2.13 AUTOMATIC CONTROL VALVES (ELECTRIC)

A. All automatic control valves (electric) shall be globe or angle pattern, electrically controlled, hydraulically operated, single seat, normally closed.

B. The valves shall be actuated by a normally closed solenoid valve operator using 24 volts, 60-cycle alternating current. The wires in the coil of the solenoid shall be embedded in an epoxy resin. The entire solenoid shall be enclosed in a water tight housing. Valves shall automatically close in event of electrical power failure.

C. All automatic control valves shall have a flow control device for manually adjusting the amount of flow of water through the valve. The flow control device shall be adjusted so that the pressure at the nozzle of the sprinkler head farthest from the automatic control valve shall be that as specified in the irrigation legend per plan. The pressure at the sprinkler head shall be measured by means of a pilot pressure gauge while the sprinkler head is operating.

D. Automatic control valves shall be as specified on the plans. Reference irrigation plan, detail and legend for size and appropriate model number.

E. Tags: Christy's Standard Irrigation ID Tags.

2.14 VALVE BOXES

A. Standard Remote-Control Valve Boxes. The valve box shall be durable plastic: The cover shall be branded with letters "RCV" and include valve number designation stenciled two inches (2") high on the outside of the cover with lid cover.

1. Rainbird Series Model VB-JMB-H: Black Body and Green Lid- Jumbo size rectangular with bolt-down cover.

B. Quick coupling valve boxes shall be round durable plastic: The cover shall be branded with the letters "QCV," two inches (2") high.

1. Rainbird Series Model VB-10RND - 10" round with bolt-down cover.

C. Drip Valves:

1. Rainbird Series Model(s) VB-JMB-H –Black Body and Green Lid with locking hex bolt with Model VB-JMB-B: Black Body only. Use body in conjunction with Model VB-JMB-B. The cover shall be branded with the letters "DV," two inches (2") high and include valve number designation.

D. Flush Valves valve boxes shall be round durable plastic:

1. Rainbird Series Model VB-7RND. The cover shall be branded with the letters "FV," two inches (2") high.

E. Gate valve and ball valve boxes shall be durable plastic: The cover shall be identified with the letters "GV" or "BV", two inches (2") high stenciled on the outside of the cover.

1. Railbird Series - Model VB-10RND 10" round with bolt-down cover.

2. Traffic Boxes shall be concrete with traffic box/cast iron lid: Carson/ Brooks 4-TT 10 1/4" diameter marked Irrigation. Brooks 3 ½ (T) PB 10" x 17" pull box w/ full bolt down traffic cover marked "Irrigation". Locate in hardscape only.

2.15 SPRAY AND ROTOR HEADS

A. Pop-up Spray Type: Full or part circle pop-up spray type sprinkler body, stem, nozzle and screen constructed of heavy-duty plastic. The sprinkler shall have a soft wiper seal for cleaning debris from pop-up stem as it retracts into case to prevent sprinkler from sticking up. The sprinkler shall have a matched precipitation rate plastic nozzle with an adjusting screw capable of regulating the radius and flow. The sprinkler shall have a strong stainless steel retract spring for positive pop down. Pop-up height shall be as indicated on plans. The sprinkler head shall have a screen under the nozzle to protect it from clogging and for easy removal for cleaning and flushing system. The sprinkler head shall have a bottom inlet and may have a side inlet for ease of installation. Use only the bottom inlet for sprinkler heads equipped with anti-drain devices.

B. Pop-up Rotary Type: Rotary sprinkler of the gear driven type. Nozzles shall be available for true matched precipitation rates:

1. The sprinkler shall be available in adjustable arc configuration. The adjustable arc sprinkler shall be adjustable from 40 degrees to 360 degrees in 1-degree increments. Adjustments shall be made from the top of the riser assembly in either the up or down position.
2. The pop-up sprinkler shall be of height as indicated on plans. Nozzle shall be integrally molded multiple orifice type that can be changed with tools included. Radius shall be adjustable by means of an exchangeable nozzle or a movable diffuser pin. Nozzle turret shall be molded with a service indentation to accept a tool for raising nozzle piston for service.
3. The sprinkler shall have a 3/4 or 1-inch NPT inlet and shall be accessible by a threaded cap for easy service.
4. The body of the sprinkler shall be constructed of non-corrosive heavy-duty ABS. The sprinkler shall be equipped with a filter screen for debris stoppage. The sprinkler shall also be available in shrub model with the same nozzle package. The sprinkler shall carry a 2-year unconditional warranty.
5. All sprinkler heads with similar functions shall be of common manufacture and, with the exception of shrubbery heads, shall be marked with the manufacturer's name and identification in a position where they may be identified without being removed from the system.

C. Swing Joint Assemblies:

1. Swing joint assemblies for pop-up spray type heads consisting of 1/2” inlets shall use two heavy-duty Marlex street ells, as manufactured by Spears – Model M412-XXX or equal, with a single schedule 40 PVC threaded ell and one schedule 80 nipples, lengths as listed in detail.
2. Swing joint assembly’s pop-up rotary type sprinklers consisting of 3/4” and greater sprinkler inlets shall be pre-assembled, double O-ring, schedule 80 PVC. Swing joint shall be sized according to rotor female bottom threaded inlet size.
    a. Swing joint as manufactured by KBI – Model TSA, Rainbird – Model TSJ or approved equal.

PART 3 EXECUTION

2.16 GENERAL

A. All work shall conform to Section 308 of the "GREEN BOOK Standard Specifications FOR Public Works Construction" and except as modified herein. No work of this Section other than sleeving under pavement shall commence prior to the completion and acceptance of all grading work specified in Section 02910, Landscape Grading.

B. Prior to all work of this Section, carefully inspect existing site conditions and equipment. Verify available pressure at point of connection and location of water meter provided by the Water Department.

C. Verify that irrigation system may be installed in strict accordance with all pertinent codes and regulations, the original design, the reference standards, and the manufacturer's recommendations.

D. In the event of discrepancy, immediately notify the Landscape Architect. Do not proceed with installation in areas of discrepancy until all such discrepancies have been fully resolved.

E. Trenches and other excavations for irrigation pipe and appurtenances shall be excavated true to alignment and grade and shall be of ample size for the proper performance of installation work, review, testing and backfill.

F. Protect all existing utilities and repair any damage to existing utilities with matching new materials, at no increase in contract price.

G. Generally, piping under concrete shall be installed by jacking, boring or hydraulic driving. Where any cutting or breaking of pavement, track sections and/or concrete work is necessary, it shall be removed and replaced by the Contractor. Permission to cut or break pavement, track sections and/or concrete shall be obtained from the Owner. No hydraulic driving will be permitted under asphalt concrete paving or track sections.

2.17 COMMISSIONING COORDINATION

A. Provide technical services of the equipment manufacturer and the contractor to operate and adjust equipment specified under this section during the commissioning phase activities, which include startup and functional performance testing, and documentation elements.

2.18 UTILITY SERVICES

A. Contractor shall provide for connections existing electrical services at locations indicated on the drawing.

B. Contractor shall connect new mainline to water services at locations indicated on the civil engineer's drawings.

3.0 LAYOUT

A. All piping or equipment show diagrammatically on drawing outside of planting areas shall be installed inside planting areas whenever possible.

B. Layout each sprinkler head and make any minor adjustments required due to differences between actual site conditions and the Drawings. Minor adjustments shall be maintained within the original design intent. Protect in place all existing trees and shrubs.

C. Layout each system using staking method as approved by Owner's Representative. Maintain and protect approved staking layout.

3.1 TRENCHING AND BACKFILL

A. Trenching:
   1. Minimum trench width shall be six inches (6").
   2. Minimum trench depth below bottom of pipe shall be two inches (2").
   3. Minimum cover shall be based on finished grades, unless otherwise noted on Drawings.
      a. Non-Pressure Lateral Line cover shall be no more than twelve inches (12") and not less than eight inches (8").
      b. Pressure Supply line (Mainline) minimum cover shall be eighteen inches (18") for lines two and one-half inches (2-1/2") and less; twenty-four inches (24") for lines two and one-half inches (2-1/2") and larger.
      c. Pipe and Wire Sleeves minimum cover shall be twenty-four inches (24").

B. Backfill:

1. All plastic pipe shall be bedded and encased with approved backfill material free of rocks and clods as indicated in the following table and/or shown on the plans.

Thickness Under Pipe Minimum	Thickness Above Pipe Minimum	Thickness at Side of Pipe Minimum
Two inches (2")	Four inches (4")	2 inches (2")

2. Provide not less than six inches (6") clearance between each line and not less than twelve inches (12") clearance between line of other trades, unless otherwise noted.
3. Do not install parallel lines directly over any other line.
4. The balance of backfill material shall be approved soil. Unsuitable material, including clods and rocks over three fourths inch (3/4") in size, shall be removed from the premises and disposed of legally at no cost to the Owner.
5. Backfill material shall be sufficiently compacted under and on each side of the pipe to provide support free of voids. Pipe joints shall remain exposed until the completion of pressure and leakage test, unless authorized by the Architect. The top six inches (6") of backfill shall be free of rocks over one inch (1"), subsoil, rubbish and debris.
6. The remainder of the backfill material shall contain no lumps or rocks larger than two and three fourths inches (2-3/4"), nor contain rubbish and debris.
7. Backfill shall be tamped or puddled to the dry density of adjacent soil. Backfill within areas of structurally compacted soils shall be returned to the original relative density as before trenching.

3.2 INSTALLATION OF PIPE

A. Unless otherwise specified, the construction of lateral lines and main lines shall include excavation and backfill, the furnishing, installing and testing of pipe, tube and fittings, the furnishing and installing of anchors, thrust blocks and location wire, the improvements, line flushing and testing, and all other work in accordance with the plans and specifications.

B. Polyvinyl chloride pipe shall be installed in such a manner so as to provide for expansion and contraction as recommended by the manufacturer.

C. All polyvinyl chloride pipe shall lay free in the trench with no induced strain. Where there is evidence of induced pipe strain, the Contractor shall be required to make pipe cuts and install angle fittings as necessary to eliminate the strain.

D. When a connection is plastic to metal, a female adapter shall be used. The metal nipple shall be hand-tightened, plus one turn with a strap wrench. Joint compound shall be IPS weld-on Teflon pipe joint compound or equal. (Plastic to galvanize coupling to galvanize nipple. Do not connect galvanize into plastic).

E. The Contractor will be required to remove and replace any fitting, which induces a torque strain to the pipe.

F. Polyvinyl chloride pipe shall be cut with a PVC pipe cutter, hand saw or hack saw with the assistance of a square and sawing vise or in a manner so as to ensure square ends. Burrs at cut ends shall be removed prior to installation so that a smooth unobstructed flow will be obtained.

G. All plastic-to-plastic joints shall be solvent-weld joints. Only the solvent recommended by the pipe manufacturer shall be used.

H. The solvent-weld joints shall be made in the following manner:

1. Thoroughly clean the mating pipe and fitting with a clean dry cloth.
2. Try the parts for fit. The parts should "dry-mate" between one-third (1/3) and two-thirds (2/3) the depth of the socket. If adequate insertion is not obtained, or bottoming occurs, try another part until a satisfactory "dry-fit" is obtained.

3. Apply a uniform coat of solvent to the outside of the pipe with a non-synthetic bristle brush.
4. Apply a uniform coat of solvent-weld to the fitting socket.
5. Reapply a light coat of solvent-weld to the pipe and quickly insert it into the fitting.
6. Give the pipe or fitting a quarter turn to ensure even distribution of the solvents and make sure that the pipe is inserted to the full depth of the fitting socket.
7. Hold in position for at least fifteen (15) seconds.
8. Wipe off excess solvent that appears at the outer shoulder of the fitting.

NOTE: For PVC Type I, 1120-1220, pipe mating surface shall first be cleaned with the application of Methyl Isobutyl Ketone (MIBK) solvent. This cleaning shall be accomplished by applying MIBK solvent to the full mating surface area and wiping off with a clean cloth, repeating the process, if necessary, until no trace of shine remains (neither streaks nor spots). The use of commercial PVC solvent-cement thinners as a substitute of MIBK is not allowed.

I. Pressure supply steel pipe and fittings: Assemble using red lead and boiled linseed oil paste or an approved equivalent. Brass and Galvanized threaded fittings shall be assembled with both Teflon tape and oil base compound to male threads only.

J. Provide concrete thrust blocks at each change of direction and at all terminal points of all rubber gasket piping. Block in accord with pipe manufacturer's instructions.

K. Provide thrust blocks at all changes of directions and reductions shall be mechanically retrained. Additional thrust blocks shall also be restrained as per manufacturer’s recommendations. Gate valves shall be treated as a dead end and shall be mechanically restrained for serviceability.

3.3 INSTALLATION OF PIPE UNDER EXISTING PAVING

A. Piping under existing pavements may be installed by jacking, boring or by hydraulic driving, except as otherwise specified or directed.

B. All pipes under pavement surface to be installed a minimum of 24 inches below A.C. paving with 6-inch bedding and a 6-inch cover of sand backfill.

C. Secure Owner's permission prior to cutting or breaking existing pavements.

D. Make completely clean cuts using power saws at approved locations only.

E. Replace and restore all surfaces to original condition, including grade, landscaping and paving

F. Restoration work shall match the original work in every respect, including type, strength, texture and finish.

G. Consult with Owner for approved methods of patching and/or replacing any damaged paving sections as a result form boring saw cutting or removal.

3.4 INSTALLATION OF PIPE UNDER NEW PAVED AREAS

A. Coordinate installation of piping and wires under paved areas with other trades.

B. All pipes under pavement surface to be installed a minimum of 24 inches below A.C. paving with a 6-inch bedding and a 6-inch cover of sand backfill.

C. If the only piping installed is over 20 feet long, pressure testing is required for that section at the time of installation. Upon completion of piping installation, the entire system must be tested.

D. If wire under paved areas cannot be continuous, all splices shall be enclosed in an approved pull box.

3.5 INSTALLATION OF CONTROL WIRE

A. Unless otherwise specified, the installation of control wire shall include excavation and backfill, the furnishing, installing, and testing of the wires, the removal and/or restoration of existing improvements and all other work in accordance with the plans and specifications.

B. Unless otherwise specified all neutral (common ground) wire shall be AWG #12 and all pilot (valve control) wire shall be AWG #14.

C. At least one spare wire shall be installed from the controller clock to the most distant valve. When wire runs go in different directions from the controller clock, a separate spare wire shall be installed from the controller clock to the most distant valve in each different wire run direction.

D. Tape and bundle all control wires at ten feet (10') o.c. maximum; place wiring with eighteen inch (18") minimum cover. When wiring is placed in common trenches with piping, set wiring two inches (2") from any piping. Place control wire along side of pipe. Do not place over the pipe.

E. All wire splicing shall take place in the valve boxes and/or pull boxes. All splices shall be made with a mechanical connector encased in a self-curing epoxy resin that provides a permanent watertight connection. No underground splices will be allowed.

F. All direct burial control wires shall be identified as to their respective valve number and controller clock letter in all pull boxes and at all wire termination. Spare wires and "future valve" wires, if any, shall also be identified. Labels and tags shall be used for identification which are not affected by moisture or temperatures between minus 30 degrees F. and plus 200 degrees F. The labels and tags shall be resistant to abrasion, dirt, grease, and chemicals used in lawn fertilizers and conditioners. The labels and tags shall be firmly attached to the wire in every case. The Contractor shall submit samples of the labels or tags to be used, to the Architect for recommended approval, prior to the installation of the control wire. Examples of nomenclature of tags or labels are as follows:

Neutral (common ground) wire ="Neutral" Clock "A"
Pilot (valve control) wire ="A.V. #1." Clock "A"
Spare Wire ="Spare" Clock "A"

G. The final operating sequence of the remote-control valves, within each individual controller clock, shall be as called out on drawings.

H. Testing:
   1. All direct burial control wire installed shall be tested in the following manner.
      a. Before any backfill material is placed over the control wires in the trench, the wires shall be tested with a meter for insulation resistance. Minimum insulation resistance to ground shall be fifty (50) megaohms. Any conductor not meeting this requirement shall be replaced.
      b. After backfill encasement, the wires shall again be tested with a meter. The minimum acceptable insulation resistance to ground on this test shall be one (1) megaohm. Any conductor not meeting this requirement shall be replaced.

3.6 INSTALLATION OF VALVES

A. General: Unless otherwise specified, the installation of the valves shall include excavation and backfill, the furnishing, installing, and testing of fittings and valves, the furnishing and installing of valve boxes and appurtenances, accessories, the removal and/or restoration of existing improvements and all other work in accordance with the plans and specifications.
   1. Fill area under valve box with a minimum of three (3) cubic feet of pea gravel before box is installed.

B. Shut-off Valves: Shut-off valves installed underground shall be housed in a suitable valve box. The gate valve hand wheel shall be removed from the stem of all valves installed underground. The wheel shall be replaced with an operating nut.

C. Quick Coupling Valves: Unless otherwise indicated, locate valves within twelve inches (12") of hardscape. Install in designated valve box.

D. Automatic Control Valves: Automatic control valves shall be set upright and housed in designated valve box, with a hinged, lockable, top. The Contractor shall place Christy's Standard Valve Identification tags on each valve corresponding to its appropriate valve station number.

3.7 INSTALLATION OF SPRINKLER HEADS

A. Unless otherwise specified, the installation of sprinkler heads shall include excavation and backfill, the furnishing, installing, and testing of risers, fittings and heads, the furnishing and installing of cone shaped screens at base of each head, the removal and/or restoration of existing improvements and all other work shall be in accordance with the plans and specifications.

B. Flushing: All water lines shall be thoroughly out before heads are installed.

C. Location and arc of heads shall be adjusted, if required to eliminate any dry spots, over water or spillage on adjacent areas.

D. Install Netafim drip tubing below the service at a constant depth of four (4) inches unless otherwise noted. Refer to Irrigation Detail Sheet for detail.

3.8 THRUST BLOCKS

A. Thrust blocks shall be concrete 2000 psi at 28 days. They shall be placed so that sides subject to thrust or load are against undisturbed earth, and valves and fittings are serviceable after concrete has set.

3.9 INSTALLATION OF BURRIED PIPING WARNING / LOCATOR TAPE

A. Warning tapes shall be installed directly on top of the pipe longitudinally and shall be centered. The warning tape shall be installed continuous for the entire length of the pipe and shall be fastened to each pipe length by plastic tape banded around the pipe with fasteners no more than 5 feet apart. Taping attached to the sections of pipe before laying in the trench shall have flaps sufficient for continuous coverage. All risers between the mainline and control valves shall be installed with warning tape.

B. Plastic warning/identification tape shall be an inert plastic film specially formulated for underground use. The minimum thickness shall be 4 mils.

C. Locator tape shall be installed over non-metallic pipe, shall be similar to warning tape, and shall include a metallic substance that can be registered by a magnetic field location device. Minimum width of 6" and thickness for locator tape shall be 5 mils. Locator tape shall be supplied by T. Christy Enterprises, Inc. or an approved equal.

3.10 CONTROL EQUIPEMENT INSPECTION

A. Contractor shall complete the following warranty tests to be performed by equipment supplier (Imperial Technical services, John Deere Green Tech, etc.) on all electrical circuits and system components including booster pump and shall submit a written approval from the equipment supplier to the Owner/ Owners Rep. prior to the start of the maintenance period. All tests shall be made to the satisfaction of the Owner. Owner's Rep.

3.11 QUALITY CONTROL

A. Pressure Tests:

1. All pressure lines shall be tested under hydrostatic pressure of 150 pounds per square inch, and all non-pressure lines shall be tested under the existing static pressure and both be proved watertight. Contractor shall provide all equipment for hydrostatic tests at no cost to the Owner.

2. Pressure shall be sustained in the lines for not less than two (2) hours. If leaks develop, the joints shall be replaced and the test repeated until the entire system is proved watertight.
3. Tests shall be observed and recommended for approval by the Landscape Architect/and or owners field superintendent prior to backfill.

B. Coverage Test:
1. When the irrigation cooling system is completed, the Contractor, in the presence of the Landscape Architect, shall perform test coverage of water afforded the field areas, complete and adequate. The Contractor shall furnish all materials and perform all work required to correct any inadequacies of coverage disclosed arising from his work.
2. Contractor shall inform the Owner's representative of any deviation from the plan required due to wind, planting, soil or site conditions that bear on proper coverage; and upon approval, perform changes to provide for proper coverage at no additional cost to Owner.

C. Normal Progress Reviews: Normal progress reviews shall be requested from the Architect at least forty-eight (48) hours in advance of any anticipated review. A review will be made by the Landscape Architect on each of the steps listed below. The Contractor will not be permitted to initiate the succeeding steps of work until he has received written approval to proceed by the inspector.
1. Immediately prior to the commencement of the work of the Section.
2. Pressure supply line installation, trenching and testing.
3. System layout.
4. After placement of all heads, valves, and controllers for coverage test.
5. Final review and receipt of "Record Drawings" and "Controller Charts."
6. Final acceptance of project by Owner.

D. In no event shall the Contractor cover up or otherwise remove from view any work under this contract without prior approval. The Contractor, at his expense, shall open any work covered prior to review to view.

E. Unprepared Review Requests: In the event the Contractor requests review of work and said work is incomplete, the Contractor shall be responsible for review cost.

F. Completion: The work will be accepted, in writing, when the whole shall have been completed satisfactorily to the Owner. In judging the work, no allowance for deviation from the original plans and specifications will be made unless already approved by the Owner, in writing, at the proper times.
1. Leave the entire installation in complete operating order, free from all defects in material, workmanship, or finish, regardless of any discrepancies and/or omissions in plans or specifications.
2. Remove from the site all debris and rubbish resulting from the work and leave the installation in clean condition.

3.12 MAINTENANCE

A. Maintenance of irrigation system prior to job completion, and during the Landscape Maintenance period, shall be the responsibility of the Contractor including, but not limited to, the following:
1. Cleaning of plugged irrigation heads.
2. Irrigation heads adjustments.
3. Volume of water being applied. (Coordinate with landscape maintenance).
4. Programming of the controller. (Coordinate with landscape maintenance).
5. Repairing leaking valves, etc.
6. Any other problem areas, which occur after installation, attributed to the irrigation system.
7. Repair or replace equipment due to acts of vandalism, theft or pest damage.
8. Lower all turf heads to final grades prior to final acceptance by Owner.

B. The contractor' responsibility for the irrigation of plant materials and the maintenance and repair of the irrigation system begins on the contract start date. The methods that are required to irrigate the grounds include automatic irrigation systems and hand or portable irrigation components. The contractor shall plan and adjust irrigation schedules for automatic, hand or portable irrigation system.

C. Sprinkler Heads: Irrigation includes watering of lawns, shrubs, trees, palms, ground cover and plants. Care shall be exercised by regulating the time and equipment to prevent wasting of water. Watering shall be done in a manner that will avoid erosion, run-off, or ponding due to excessive quantities or rate of application. Sprinkler heads shall be adjusted to prevent water spray on buildings and sidewalks. It shall be the contractor's responsibility to apply enough water to assure and maintain the health and vigor of all lawn, shrubs, trees, and planted areas.

D. Water Restrictions: The contractor shall follow Federal, State, and local water agencies and authorities' directives. The district reserves the right to reduce or eliminate watering during water shortages. The contractor shall be held liable for fines imposed by Federal, State and/or local water agencies.

E. The contractor is responsible for the required irrigation by any means during the periods of system breakdown.

F. Frequency of Services: Irrigation Maintenance shall be weekly. Automatic watering systems in the immediate area of pedestrian traffic shall be set to operate during the hours of 10:00 PM to 4:30 AM.

END OF SECTION 328400

SECTION 32 93 00
PLANTING

PART 1 GENERAL

1.1 DESCRIPTION (SCOPE)

The work of this Section includes all material, equipment, and labor necessary for and incidental to completing all Landscape Planting work as indicated on the Drawings, or as reasonably implied, or as designated herein, including, but not limited to, the following:

A. Carefully inspect the site and verify all existing conditions and dimensions prior to proceeding with any work under this contract.

B. Apply for all permits and pay for same.

C. Clear and remove from the site all construction debris, surface growth, or other undesirable material.

D. Installation of deep root barriers as specified on the plan.

E. Fine grading of all planting areas and weed abatement.
   1. Preparation of all planting holes including soil amending.
   2. Furnishing and installation of all plant material(s) unless otherwise noted.

F. Furnishing and installation of all required planting backfill materials, top dressing, edging, topsoil, and miscellaneous materials.

G. Obtain an agronomic/ soils suitability test and soils management report from an approved certified testing laboratory complying with the California water efficient landscape ordinance compliance (WELO) prior to any import soil acquisition/ delivery and after rough grading of the site has been completed. Obtain follow-up sample and report post incorporation of initial findings for performance verification.

H. Standard practices for tree and shrub care and maintenance shall follow the guidelines and mandates as set forth in the ANSI A300

I. Provide (90) ninety continuous calendar days Maintenance Period.

J. Project clean up and de-weeding of all planting areas.

K. Provide one-year guarantee for all plant material.

1.2 RELATED WORK (DOCUMENT REFERENCES)

The provisions of the “GREENBOOK Standard Specifications for Public Works Construction," latest edition, including General and Supplementary Conditions and Division 1 Specification Sections and drawing package, shall apply except as modified herein.

Section 328400 - Irrigation Systems
Section 329400 –Tree Protection and Trimming.
Section 311000 –Site Clearing.
Section 312000 – Earth Moving.

1.3 DEFINITIONS

A. Backfill: The earth used to replace or the act of replacing earth in an excavation.

B. Bare-Root Stock (Applies to Palms only): Plants with a well-branched, fibrous-root system developed by transplanting or root pruning, with soil or growing medium removed, and with not less than minimum root spread according to ANSI Z60.1 for type and size of plant required.

C. Container-Grown Stock: Healthy, vigorous, well-rooted plants grown in a container, with a well-established root system reaching sides of container and maintaining a firm ball when removed from container. Container shall be rigid enough to hold ball shape and protect root mass during shipping and be sized according to ANSI Z60.1 for type and size of plant required.

D. Finish Grade: Elevation of finished surface of planting soil (not top of mulch or thatch layer).

E. Manufactured Topsoil: Soil produced off-site by homogeneously blending mineral soils or sand with stabilized organic soil amendments to produce topsoil or planting soil.

F. Pesticide: A substance or mixture intended for preventing, destroying, repelling, or mitigating a pest. This includes insecticides, miticides, herbicides, fungicides, rodenticides, and molluscicides. It also includes substances or mixtures intended for use as a plant regulator, defoliant, or desiccant.

G. Pests: Living organisms that occur where they are not desired, or that cause damage to plants, animals, or people. These include insects, mites, grubs, mollusks (snails and slugs), rodents (gophers, moles, and mice), unwanted plants (weeds), fungi, bacteria, and viruses.

H. Planting Area: Areas to be planted.

I. Planting Soil: Standardized topsoil; existing, native surface topsoil; existing, in-place surface soil; imported topsoil; or manufactured topsoil that is modified with soil amendments and perhaps fertilizers to produce a soil mixture best for plant growth.

J. Plant; Plants; Plant Material: These terms refer to vegetation in general, including trees, shrubs, vines, ground covers, ornamental grasses, bulbs, corms, tubers, or herbaceous vegetation.

K. Root Flare: Also called "trunk flare." The area at the base of the plant's stem or trunk where the stem or trunk broadens to form roots; the area of transition between the root system and the stem or trunk.

L. Stem Girdling Roots: Roots that encircle the stems (trunks) of trees below the soil surface.

M. Subgrade: Surface or elevation of subsoil remaining after excavation is complete, or the top surface of a fill or backfill before planting soil is placed.

N. Subsoil: All soil beneath the topsoil layer of the soil profile, and typified by the lack of organic matter and soil organisms.

O. Surface Soil: Soil that is present at the top layer of the existing soil profile at the Project site. In undisturbed areas, the surface soil is typically topsoil; but in

1.4 PRODUCT HANDLING (DELIVERY, STORAGE AND HANDLING)

A. Notify the Contracting Officer’s Representative of the delivery schedule in advance so the plant material may be inspected upon arrival at the job site. Remove unacceptable plant and landscape materials from the job site immediately.
B. Deliver all items to the job site in their original containers with all labels intact and legible at time of Landscape Architect's review.
C. Bulk Materials:
    1. Do not dump or store bulk materials near structures, utilities, walkways and pavements, or on existing turf areas or plants. Keep bulk materials in dry storage away from contaminants.

2. Provide erosion control measures to prevent erosion or displacement of bulk materials, discharge of soil-bearing water runoff, and airborne dust reaching adjacent properties, water conveyance systems, or walkways.
3. Accompany each delivery of // bulk fertilizers // lime // and // soil amendments // with appropriate certificates.

D. Deliver bare-root stock plants freshly dug. Immediately after digging up bare-root stock, pack root system in wet straw, hay, or other suitable material to keep root system moist until planting.

E. Do not prune trees and shrubs before delivery. Protect bark, branches, and root systems from sun scald, drying, wind burn, sweating, whipping, and other handling and tying damage. Do not bend or bind-tie trees or shrubs in such a manner as to destroy their natural shape. Provide protective covering of plants during shipping and delivery. Do not drop plants during delivery and handling.

F. The use of equipment such as "tree spades" is permitted provided the plant balls are sized in accordance with ANSI Z60.1 and tops are protected from damage.

G. Deliver plants after preparations for planting have been completed and install immediately. If planting is delayed more than 6 hours after delivery, set plants and trees in their appropriate aspect (sun, filtered sun, or shade), protect from weather and mechanical damage, and keep roots moist.
1. Heel-in bare-root stock: Soak roots that are in dry condition in water for two hours. Reject dried-out plants.
2. Set balled stock on ground and cover ball with soil, peat moss, sawdust, Jute or other acceptable material.
3. Do not remove container-grown stock from containers before time of planting.
Plants that cannot be planted immediately upon delivery shall be kept in the shade, well protected (weather & mechanical, vandlaism), and keep roots moist by covering with mulch, burlap or other acceptable means of retaining moisture. Do not store plants on asphalt paving.
4. Water root systems of plants stored on-site deeply and thoroughly with a fine-mist spray or very low flow trickle. Water as often as necessary to maintain root systems in a moist, but not overly wet, condition

H. Groundcovers: Deliver plant materials immediately prior to placement. Keep plants moist. Do not remove container-grown stock from containers until planting time.

I. Sod: Harvest, deliver, store, and handle sod according to requirements in TPI's "Guideline Specifications to Turfgrass Sodding". Deliver sod in time for planting within 24 hours of harvesting. Protect sod from breakage, seed contamination and drying.

J. Plants damaged during transit or delivery, or exhibiting broken limbs, defoliation or damaged from heat, frost or wind shall be rejected at the project site and replaced with new stock at no charge in Contract Time or Sum to the Owner.

K. All pesticides and herbicides shall be properly labeled and registered with the U.S. Department of Agriculture. Deliver materials in original, unopened containers showing, certified analysis, name and address of manufacturer, product label, manufacturer’s application instructions specific to the project and indication of conformance with state and federal laws, as applicable.

1.5 PROJECT CONDITIONS

A. Verify actual grade elevations, service and utility locations, irrigation system components, and dimensions of plantings and construction contiguous with new plantings by field measurements before proceeding with planting work.

B. Utilities- Determine location of underground utilities and perform work in a manner which will avoid possible damage. Hand excavate, as required. Maintain grade stakes set by others until removal is mutually agreed upon by parties concerned.

C. Excavation – When conditions detrimental to plant growth encountered, such as rubble fills, adverse drainage conditions, or obstructions, notify Architect/Engineer before planting.

D. Field Measurements: Verify actual grade elevations, service and utility locations, irrigation system components, and dimensions of plantings and construction contiguous with new plantings by field measurements before proceeding with planting work.

E. Interruption of Existing Services or Utilities: Do not interrupt services or utilities to facilities occupied by District or others unless permitted under the following conditions and then only after arranging to provide temporary services or utilities according to requirements indicated:
   1. Notify no fewer than two days in advance of proposed interruption of each service or utility.
   2. Do not proceed with interruption of services or utilities without inspector or construction manager's permission.

F. Weather Limitations: Proceed with planting only when existing and forecasted weather conditions permit planting to be performed when beneficial and optimum results may be obtained. Apply products during favorable weather conditions according to manufacturer's written instructions and warranty requirements.

G. Plant trees, shrubs, and other plants after finish grades are established and before planting turf areas unless otherwise indicated:
   1. When planting trees, shrubs, and other plants after planting turf areas, protect turf areas, and promptly repair damage caused by planting operations.

1.6 QUALITY ASSURANCE

A. Industry Standards: The following standards shall be referenced from a part of this Section.
   1. Standardized Plant Names latest edition, issued by the American Joint Committee on Horticulture Nomenclature.
   2. American Standard for Nursery Stock for Stock, latest edition issued by American Association of Nurserymen, Inc.

B. All plants and planting material shall meet or exceed the specifications of Federal, State and County laws requiring inspection for plant disease and insect control.

C. Nursery Qualifications: Company specializing in growing and cultivating the plants with three years documented experience and which the State Department of Agriculture regularly inspects.

D. Installer Qualifications: a single firm specializing in commercial landscaping holding a current California C27 license shall perform landscaping Work. Installer shall maintain an experienced full-time (English speaking) supervisor thoroughly familiar with the type of materials being installed and the proper materials and methods for their installation, and who shall direct all work performed under this Section on Project site when work is in progress.

E. Pesticide Applicator: The Applicator of all weed control materials shall be licensed by the State of California as a Pest Control Operator and a Pest Control Advisor in addition to any subcontractor licenses that are required.
   1. Provide certificate of compliance from governing authority having jurisdiction indicating approval of herbicide mixture.
   2. All materials and methods used for Weed Abatement must conform to Federal, State, and Local Regulations.
   3. Include product label and manufacturer's literature and data for pesticides and herbicides

F. A qualified Arborist shall be licensed and required to submit one copy of license to the Contracting Officer's Representative

G. For each unamended soil type (Native on-site soil and Import Soils (Where applicable)), furnish soil analysis and a written report by a qualified soil-testing laboratory stating pH and electroconductivity (salinity) measurement – saturated extract paste nutrients/toxic elements measurement of DTPA extract for Table I elements measurement of sodicity (Sodium Adsorption Ratio) saturation extract: nitrate, chloride, sulfate, sodium, calcium, magnesium, potassium, soluble phosphate and boron, estimate of soil texture and soil organic matter presence of lime determined soil organic matter percentage, soil texture and estimate water percolation rate.
   1. The soil-testing laboratory shall oversee soil sampling; with depth, location, and number of samples to be taken per instructions from Landscape Architect. A minimum of 2 representative

samples @ depths of 8”-12” shall be taken from varied locations for each soil to be used or amended for planting type purposes.
2. A written soils management report that explains what is found and provides recommendations for corrective measures and actions to be taken including long term maintenance shall be included.
3. Testing methods, data and written recommendations shall comply the requirements of California State AB 1881 requirement for Building Permits, also known as WELO latest edition at time of project submittals.
4. Performance confirmation test samples (minimum 2) and reports shall be provided once all components within original findings have been incorporated.

H. Analysis and Standards: A Package standard product with manufacturer certified analysis. For other materials, provide analysis by recognized laboratory made in accordance with methods established by the Association of Agriculture Chemists wherever applicable. Include product label and manufacturer's literature and data for pesticides and herbicides and fertilizers

I. Trees, Shrubs and Plants: Provide trees, shrubs and plants of quantity, size, genus, species, and variety shown and scheduled for landscaping and complying with recommendations and requirements of ANSI Z60.1 – American Standard for Nursery Stock. Provide healthy, vigorous stock, grown in recognized nursery in accordance with good horticultural practice and free of disease, insects, eggs, larvae and defects such as knots, sunscald, injuries, abrasions or disfigurement. Label at least one tree and one shrub of each variety with a securely attached waterproofed tag bearing legible designation of botanical and common name.
1. Dimensions: Measure according to ANSI Z60.1. Do not prune to obtain required sizes. The height and spread of all plant material shall be measured with branches in their normal positions. The caliper of other dimensions of any plant materials shall be of standard quality and size for type listed. When the same species of tree is shown in a group planting on the plan, all trees in the group shall match in height, spread and appearance. The height of balled and burlapped Palm trees shall be measure from the base of the palm above the finish grade to the bottom of the first green frond projecting upward from the palm pineapple. Refer to the Palm tree planting detail on the detail sheet.

J. Do not make substitutions. If specified landscape materials are not obtainable, submit proof of non-availability to Landscape Architect or Owner together with proposed plant substitution. For equivalent use of material as specified.

K. Inspection: The Landscape Architect reserves the right to inspect box size trees at place of growth or upon delivery to the site prior to planting for compliance with requirements for genus, species, variety, size and quality. Owner retains the right to further inspect trees and shrubs for size and condition of root-balls, root systems, insects, injuries, and latent defects, and to reject unsatisfactory or defective material at any time during progress of work. Remove rejected trees or shrubs immediately from project site.

1.7 SUBMITTALS

A. Materials lists: Within Seven (7) days after award of the Contract, submit a complete list of all materials proposed to be furnished and installed under this Section, demonstrating complete conformance with the requirements specified.
1. Submit complete List of landscape materials and equipment, including manufacturer’s name and address, specific trade names, catalog numbers complete with illustrations and descriptive literature and clearly mark, or underline proposed items.
2. Pesticides and Herbicides (Weed Control): weed control materials and quantities per acre intended for use in controlling the weed types prevalent and expected on the site, as supplied by the Landscape Contractor. Landscape Contractor shall furnish the general contractor and landscape Architect data to demonstrate the compatibility of the weed control materials and methods with the intended plant and seed varieties. Include product label and manufacturer's application instructions specific to the Project.

3. Plant Material (Selection, Tagging and Ordering): Submit botanical name and common name, quantities, sizes, and sources for plant material(s) and include photos of material for reference of quality of material expected to be delivered to site.
    a. Plant Photographs: Include color photographs in digital format of each required species and size of plant material as it will be furnished to the Project. Take photographs from an angle depicting true size and condition of the typical plant to be furnished. Include a scale rod, person, or other measuring device in each photograph. For species where more than twenty plants are required, include a minimum of three photographs showing the average plant, the best quality plant, and the worst quality plant to be furnished. Identify each photograph with the full scientific name of the plant, plant size, and name of the growing nursery.
    b. Submit request for inspection and documentation to the Landscape Architect and Owner at least one month prior to start of landscape planting work, certifying that all plant materials have been ordered.
    c. Plants shall be subject to inspection and rejection by the Landscape Architect and Owner at place of growth and after delivery, for conformance to specifications not deemed meeting the basis of ANSI Z60.1. The Landscape Architect reserves the right to review material once fully delivered to site and staged and reject any material
4. Planting Schedule: proposed planting schedule, indicating dates for each type of landscaping work during normal seasons for such work in area of site. Correlate with specified maintenance periods to provide maintenance from date of Substantial Completion review. Once accepted, revise dates only as approved in writing, after documentation of reasons for delays.

B. Samples for Verification: For each of the following:
1. Trees and Shrubs: Minimum of three (3) samples of each variety and size delivered to the site for review. Maintain approved samples on-site as a standard for comparison.
2. Organic Compost and Soil Amendments: One-quart volume bag of each organic Compost type required; in sealed plastic bags labeled with composition of materials by percentage of weight and source of mulch. Each Sample shall be typical of the lot of material to be furnished; provide an accurate representation of color, texture, and organic makeup.
3. Mulch: Two-pound sample of each mulch required, in sealed plastic bags labeled with source of mulch. Sample shall be typical of the lot of material to be delivered and installed on the site; provide an accurate indication of color, texture, and makeup of the material.
4. Landscape Membranes (including filter fabric): 12” by 12” (inches).
5. Edging Materials and Accessories: 12” in length min. and include 1 of each accessory type.
6. Root Barrier: Width of panel by 12 inches.
7. Decomposed Granite: One-quart volume bag of each decomposed granite type required; in sealed plastic bags and labeled. Each Sample shall be typical of the lot of material to be furnished; provide an accurate representation of color and texture.
8. Fill sand: One-quart volume bag.
9. Tree Grates, frames and Accessories: Shall be delivered to the site in order to verify design and color selected.

C. Procurement List: Used the approved list of landscape materials and equipment for procurement without deviation unless otherwise authorized in writing

D. Product Certificates: For each type of manufactured product, from manufacturer, and complying with the following:
1. Manufacturer's certified analysis including fertilizer, soil amendments, minerals, mulch and other standard or required products.
2. Analysis of other materials by a recognized laboratory made according to methods established by the Association of Official Analytical Chemists, where applicable.
3. Submit documentation after completion of rough grading, all plant material has been secured for the project and is available in the quantities and species/varieties specified.
4. Deliver all certificates to the Landscape Architect upon delivery to job site. Include:
    a. Quantity of commercial fertilizers
    b. Quantity of soil amendments.

c. Quantity and quality of plant material
d. Quality and purity of seed germination

E. Material Test Reports: For existing native surface topsoil, existing in-place surface soil and imported or manufactured topsoil and onsite amended soil after incorporation of materials stated within first agronomic soils report for performance confirmation.

1.8 RESPONSIBILITY AND COORDINATION DURING WEED ABATEMENT

A. During Weed Abatement procedures, the landscape contractor is responsible for the erection of all signs and barriers required to prevent intrusion into the treated areas and to notify the public.

B. No material or methods used for Weed Abatement shall affect the landscape planting or turf establishment. No material or method shall render the job site unusable for more than ten (10) days from date of application.

C. Weeds: Include Dandelion; Jimsonweed; Quackgrass;Horsetail; Morning Glory; Rush Grass; Mustard, Lambsquarter; Chickweed Cress; Crabgrass, Canadian Thistle, Nutgrass,Posion Oak, Blackberry, Tansy Ragwort, Bermuda Grass ,Johnson Grass. Poison Ivy, Nut Sedge, Nimble Will, Bent weed, Wild Garlic, Perennial Sorrel and Brome Grass

1.9 SEQUENCING AND SCHEDULING

A. Planting Time - Proceed with and complete landscaping work as rapidly as portions of site become available.
   1. Correlate planting with specified maintenance periods to provide maintenance from date of Substantial Completion review.
   2. All irrigation work shall be inspected and approved before start of any work of this section.

B. Coordination with lawns/turf areas – Plant trees and shrubs after grades are established and prior to planting lawns –hydro seeded or sodden- unless otherwise acceptable to Architect/Engineer. If planting of trees and shrubs occurs after lawn work, protect lawn areas and promptly repair damage to lawns resulting from planting operations.

C. Observations:
   1. All field observations herein specified shall be made by the Landscape Architect/District. The Contractor shall request at least 48 hours in advance of the time observations are required.
   2. Field Observations will be required for the following parts of the work:
      a. After rough grading is, complete and the landscape contractor has crossed rip, till the planting areas, and removed rocks in excess of one (1) inch.
      b. When fine grading is complete per Civil Engineers precise grading plans and all rocks in excess of one (1) inches are removed and completion of soil amendments.
      c. Plant material selection prior to site delivery –as time permits for review by Landscape architect. The contractor shall submit plant photographs of each material specified from the nursery of procurement. The contractor shall also submit the name of the nursery, the location and the name of the contact person along with a phone number of the nursery contact person.
      d. When plant material is spotted for installation but before planting holes are excavated and when specimen tree locations are staked.
      e. Specimen trees at source before delivery. All tree shown in tree masses or in row formation shall be matched in height and form, general appearance and shall be approved at the nursery before delivery.
      f. When finished grading is complete in groundcover and other planting areas prior to conducting an irrigation coverage test.
      g. Lawn areas prior to seeding or sodding.
      h. Thirty-day establishment period after initial Hydroseed and issuance of landscape maintenance period.
      i. Final acceptance and project turn over.

PART 2 - PRODUCTS

All materials shall conform to the requirements of Section 212 of the Standard Specifications, except as modified herein. All materials shall be standard, first grade quality and shall be in prime condition when installed and accepted. Any commercially processed or packaged material shall be delivered to the site in the original unopened container bearing the manufacturer's guaranteed analysis.

2.1 PLANTING SOILS

A. Planting Soil: Topsoil with pH range of 5.5 to 7.5, a minimum of 6 percent organic material content; Minimal to no qualitative Lime, Boron less than 0.8, ECe less than 2.0, SAR less than 2.0, percolation rate of 2"/ hr and free of stones 1 inch (25 mm) or larger in any dimension and other extraneous materials harmful to plant growth.

B. Existing Planting Soil: Existing, native surface topsoil formed under natural conditions retained during excavation process and stockpiled on-site. Verify suitability of native surface topsoil to produce viable planting soil. Clean soil of roots, plants, sod, stones, clay lumps, and other extraneous materials harmful to plant growth.
   1. Supplement with import planting soil ASTM D5268 topsoil when quantities are insufficient.
   2. Mix existing, native surface topsoil with the following minimum 4 cu. Yards/1000Sqft of nitrogen fortified organic amendment and fertilizers as recommended by the soils analysis.

C. Imported planting soil: imported topsoil or manufactured topsoil from off-site sources can be used if sufficient topsoil is not available on site to meet the depth as specified herein. The contractor shall furnish imported class 'a' soil (astm d 5268 topsoil), tested for agronomic and germination recommendations, free from infestation with nematodes or other undesirable insects, plant diseased organisms and petroleum biproducts. At least 10 days prior to topsoil delivery, notify the landscape architect of the source(s) from which topsoil is to be furnished and agronomic soils report. obtain imported topsoil displaced from naturally well-drained construction or mining sites. see "planting soil" above for acceptable soils parameters.

2.2 PESTICIDES AND HERBICIDES

A. Consider IPM (Integrated Pest Management) practices to minimize the use of all pesticides and chemical products. Obtain approval of District representative or governing agency for allowable products, product alternatives, scheduling and application procedures. Evaluate existing weather and site conditions prior to application. Apply products during favorable weather and site conditions according to manufacturer's written instructions and warranty requirements. Pesticides to be registered and approved by EPA and the state of California, acceptable to authorities having jurisdiction, and of type recommended by manufacturer for each specific problem and as required for Project conditions and application. Do not use restricted pesticides unless authorized in writing by authorities having jurisdiction.

B. All Chemicals used for weed control shall be registered by the State of California Department of Food and Agriculture and the Environmental Protection Agency with registration identification on the label. Label shall be at job site at all times.

C. All chemicals shall be applied as per registered label instruction and manufacturer recommendations. The use of any restricted material is forbidden unless a special use permit is obtained from the County Department of Agriculture.

D. Chemicals requiring a licensed applicator must be applied by persons registered with the County Department of Agriculture's Commissioner's Office as possessing a current, valid, qualified pest control applicator's license.

E. Pre-Emergent Herbicide (Selective and Non-Selective): Effective for controlling the germination or growth of weeds within planted areas at the soil level directly below the mulch layer. “Ronstar-G or approved equal.
F. Post-Emergent Herbicide (Selective and Non-Selective): Effective for controlling weed growth that has already germinated. non-selective, translocative herbicide shall be “Round-Up” or equal.

2.3 INORGANIC SOIL AMENDMENTS

A. Soil conditioners may include any or all of the specified conditioners herein specified and shall be applied at rates indicated in the Agronomic soils report or special conditions.
   1. Lime: ASTM C602, agricultural liming material containing a minimum of 80 percent calcium carbonate equivalent and as follows:
      a. Provide lime in form of ground // dolomitic limestone // calcitic limestone // mollusk shells or as directed by soils lab report.
   2. Sulfur: Granular, biodegradable, and containing a minimum of 90 percent sulfur, with a minimum of 99 percent passing through No. 6 (3.35 mm) sieve and a maximum of 10 percent passing through No. 40 (0.425 mm) sieve.
   3. Iron Sulfate (ferrous sulfate): Non-Staining Pelletized or granular form containing not less than 20% expressed metallic iron (Fe) and 11% percent sulfur (S).
   4. Aluminum Sulfate: Commercial grade, unadulterated
   5. Ammonium Sulfate: Granular form containing not less than 21% nitrogen and 24% sulfur
   6. Perlite: ASTM C549, horticultural perlite, soil amendment grade.
   7. Agricultural Gypsum: To be agricultural grade gypsum and shall conform to section 212-1.2 of the standard specifications for Public Works Construction, latest edition; Minimum 90 percent calcium sulfate, finely ground with 90 percent passing through No. 50 (0.30 mm) sieve.
   8. Coarse Sand shall be concrete sand, ASTM C33 Fine Aggregate, clean, sharp free of limestone, shale and slate particles, and toxic materials.
   9. Vermiculite: ASTM C516, horticultural grade and free of any toxic materials.
   10. Diatomaceous Earth: Calcined, 90 percent silica, with approximately 140 percent water absorption capacity by weight.
   11. Zeolites: Mineral clinoptilolite with at least 60 percent water absorption by weight.

2.4 ORGANIC SOIL AMENDMENTS

A. Humus based material shall be incorporated at a minimum rate of 4 cubic yards per 1000 sqtf. Material to meet the following requirements:
   1. Composted wood products are conditionally acceptable [stable humus must be present]. Wood based products are not acceptable which are based on red wood or cedar.
   2. Sludge-based materials are not acceptable.
   3. Have an acid-soluble ash content of no less than 6% and no more than 20%.
   4. Organic matter shall be at least 50% on a dry weight basis.
   5. The pH of the material shall be between 6 and 7.5.
   6. The salt content shall be less than 10 milliohm/cm @ 25° C. on a saturated paste extract.
   7. Boron content of the saturated extract shall be less than 1.0 part per million.
   8. Silicon content (acid-insoluble ash) shall be less than 50%.
   9. Calcium carbonate shall not be present if to be applied on alkaline soils.
   10. Carbon: nitrogen ratio is less than 25:1.
   11. The compost shall be aerobic without malodorous presence of decomposition products.
   12. The maximum particle size shall be 0.5 inch, 80% or more shall pass a No. 4 screen for soil amending.
   13. Maximum total permissible pollutant concentrations in amendment in parts per million on a dry weight basis:

Arsenic	20	copper	150	selenium	50	Nickel	100
Cadmium	15	lead	200	silver	10		
Chromium	300	mercury	10	vanadium	500		
Cobalt	50	molybdenum	20	zinc	300		

14. Types of acceptable products are composts, manures, mushroom composts, straw, alfalfa, peat mosses etc. low in salts, low in heavy metals, free from weed seeds, free of pathogens and other deleterious materials.
15. Products/ Suppliers: Humic Compost as supplied by Agriservice; Forest floor Humus as supplied by Agromin; Superior Compost as supplied by Whittier fertilizer or Approved Equal

2.5 FERTILIZERS

A. Soil Test: Evaluate existing soil conditions and requirements prior to fertilizer selection and application to minimize the use of all fertilizers and chemical products. Obtain approval of Landscape Architect and Owner for allowable products, product alternatives, scheduling and application procedures. Evaluate existing weather and site conditions prior to application. Apply products during favorable weather and site conditions according to manufacturer's written instructions and warranty requirements. Fertilizers to be registered and approved by EPA, acceptable to authorities having jurisdiction, and of type recommended by manufacturer applicable to specific areas as required for Project conditions and application. Provide commercial grade plant and turf fertilizers, free flowing, uniform in composition and conforms to applicable state and federal regulations.

B. Commercial Fertilizer: Commercial-grade complete fertilizer of neutral character, consisting of slow-release nitrogen, 50 percent derived from natural organic sources of urea formaldehyde, phosphorous, and potassium in the following composition:
   1. Composition shall be nitrogen, phosphorous, and potassium in amounts recommended in soil reports from a qualified soil-testing laboratory.

C. Slow-Release Fertilizer: Granular or pellet fertilizer consisting of 50 percent water-insoluble nitrogen, phosphorus, and potassium in the following composition:
   1. Composition shall be nitrogen, phosphorous, and potassium in amounts recommended in soil reports from a qualified soil-testing laboratory.

D. Planting tablets: Tightly compressed chip type, long-lasting, slow-release, commercial-grade planting fertilizer in tablet form. Tablets shall break down with soil bacteria, converting nutrients into a form that can be absorbed by plant roots.
   1. Nutrient Composition shall be 20 percent nitrogen, 10 percent phosphorous, and 5 percent potassium, by weight plus micronutrients.
      a. Products/ Suppliers: Best-tabs 20-10-5 weighing 21 grams each as manufactured by Simplot or Agriform 20-10-5 weighing 21 grams each as manufactured by Scotts.
   2. Specialty: 12-8-8 General or 9-3-9 Palm & Tropical, weighing 7 grams each as manufactured by Gro-power;
   3. Quantity of tablets shall be as indicated by manufacturer and package labels.

E. Fertilizer shall be delivered to the site in the original, unopened container, bearing the manufacturer’s guaranteed analysis. Any fertilizer that becomes caked or damaged, making it unsuitable for use, will not be accepted and shall be removed from site.

2.6 MULCH

A. Organic Mulch: Free from deleterious materials and suitable as a top dressing of trees and shrubs, consisting of one of the following:
   1. Type: Seed cover material:
      a. Straw for lawn seed bed mulch: Stalks from oats, wheat, rye, barley, or rice that are free from noxious weeds, mold or other objectionable material. Straw shall be in an air dry condition and suitable for placing with blower equipment.
      b. Wood cellulose fiber for use with hydraulic application of grass seed and fertilizer: Consist of specially prepared wood cellulose fiber, processed to contain no growth or germination inhibiting factors, and dyed an appropriate color to facilitate visual metering of the application of materials. On an air-dry weight basis, the wood cellulose fiber shall contain a maximum of 12 percent moisture, plus or minus 3 percent at the time of manufacture.

The pH range shall be from 3.5 to 5.0. The wood cellulose fiber shall be manufactured so that:

i. After addition and agitation in slurry tanks with fertilizers, grass seeds, water, and other approved additives, the fibers in the material will become uniformly suspended to form an homogeneous slurry.
ii. When hydraulically sprayed on the ground, the material will form a blotter like cover impregnated uniformly with grass seed.
iii. The cover will allow the absorption of moisture and allow rainfall or applied water to percolate to the underlying soil.

2. Size Range shall be 1/2 inch minimum.
3. Color shall be natural.

B. Compost Mulch: Well-composted, stable, and weed-free organic matter, pH range of 5.5 to 8; moisture content 35 to 55 percent by weight; 100 percent passing through 2 inch (25 mm) sieve; soluble salt content of 2 to 5 decisiemens/m; Free from deleterious materials not exceeding 0.5 percent inert contaminants and free of substances toxic to plantings; and as follows:
1. Organic Matter Content: 50 to 60 percent of dry weight.
2. Size Range: maximum 2” in size
3. Feedstock: Agricultural, yard trimmings; or source-separated or compostable mixed solid waste.
4. Acceptable Product: Forest Floor Mulch as provided by Aguinaga Green or equal.

2.7 DECOMPOSED GRANITE

A. Decomposed Granite: Igneous rock which has weathered in place or any sedimentary material principally derived from igneous rock. Provide washed material free of organic material and other deleterious substances.

B. Binder: Natracil organic binder, binder shall have a minimum swell volume of 35 ml/gm and shall be blended with a pug mill that includes a weight belt feeder that insures the proper ratio and the uniform blending of the binder. Bucket of Belt blending are not acceptable methods.

C. Material shall be C-35 conforming to the following gradation as determined by ASTM C 136:

Sieve Size	Percent Passing (by weight)
3/8 inch	100
No. 4	100
No. 8	93
No. 16	65
No. 30	44
No. 50	28
No. 100	16
No. 200	8.7

2. Resistance “R” value 82%.
3. Sand equivalent value 61%.

2.8 WEED-CONTROL BARRIERS

A. Nonwoven Geotextile Filter Fabric: Polypropylene or polyester fabric, 3 oz. /sq. yd. minimum, composed of fibers formed into a stable network so that fibers retain their relative position. Fabric shall be inert to biological degradation and resist naturally encountered chemicals, alkalis, and acids. Mirafi 140N.

B. Composite Fabric: Woven, needle-punched polypropylene substrate bonded to a nonwoven polypropylene fabric, 4.8 oz. /sq. yd. Mirafi 700X.

2.9 TREE STABILIZATION MATERIALS

A. Stakes and Ties:

1. Upright and Guy Stakes: Rough-sawn, sound, new lodge pole pine, free of knots, holes, cross grain, and other defects, 2-inch diameter for 24" box and smaller 2 ½' for 25" box nominal by length indicated, pointed at one end.

2. Flexible Ties: Shall be manufactured of virgin flexible vinyl meeting ASTM-D-412 standards for tensile and elongation strength. Material shall be black for ultraviolet resistance. Tree ties shall be manufactured with a double back locking configuration and secured with one galvanized nail to prevent slippage. Tree ties shall elongate with the tree growth preventing damage to the tree. Install and secure per manufacturer's written recommendations:
   a. Products: Subject to compliance with requirements, available products that may be incorporated into the work include, but are not limited to the following:
      1) VIT Products, Inc. 32" for 24" box and smaller; cinch belts/buckles for 36" box+.

2.10 LANDSCAPE EDGING

A. Concrete mow strip / header: Concrete mow strip shall be 6" x 6" in dimension and contain (1) on #3 rebar continuous. Rebar shall overlap 12" at all splices. Expansion joints shall be located at 48" O.C. Refer to section 321313 CONCRETE, for concrete material specifications.

B. Recycled Plastic: a durable and flexible edging solution, which is made from high-density polyethylene 100 % recycled plastic, and is ideal for creating organic curves and shapes in your landscaping

C. Steel edging: Standard commercial steel edging, rolled edge, fabricated in sections of standard lengths, with loops stamped from or welded to face of sections to receive stakes.
   1. Edging Size: Minimum size 3/16 inch (4.8 mm) wide by 4 inches (100 mm) deep
   2. Stakes: Tapered steel, a minimum of // 12 inches (300 mm) // 15 inches (380 mm) // Insert length // long.
   3. Accessories: Standard tapered ends, corners, and splicers.
   4. Finish: Powder Coated per plans
   5. Paint color: per plans

D. Aluminum edging: ASTM B221, Alloy 6063-T6, standard profile extruded aluminum edging, fabricated in standard lengths with interlocking sections with loops stamped from face of sections to receive stakes.
   1. Edging Size: // 3/16 inch (4.8 mm) wide by 4 inches (100 mm) deep
   2. Stakes: Aluminum, ASTM B221, Alloy 6061-T6, approximately 1-1/2 inches (38 mm) wide by 12 inches (300 mm) long.
   3. Finish: Powder Coated per plans
   4. Paint color shall be per plans

2.11 EROSION CONTROL

A. Erosion control blankets: Biodegradable wood excelsior, straw, or coconut fiber mat enclosed in a photodegradable plastic mesh. Include manufacturer's recommended biodegradable staples, 6 inches (150 mm) long.

B. Erosion control fiber mesh: Biodegradable burlap or spun-coir mesh, a minimum of 0.92 lb/sq. yd. (0.5 kg/sq. m), with 50 to 65 percent open area. Include manufacturer's recommended biodegradable staples, 6 inches (150 mm) long.

C. Erosion control mats: Cellular, non-biodegradable slope stabilization mats designed to isolate and contain small areas of soil over steeply sloped surface, of // 3 inch (75 mm) // 4 inch (100 mm) // 6 inch (150 mm) // Insert dimension // nominal mat thickness. Include manufacturer's recommended biodegradable anchorage system for slope conditions.

2.12 ROOT BARRIER

A. Black, molded, modular panels manufactured with 50% recycled polyethylene plastic with ultraviolet inhibitors, 85 mils thick, with vertical root deflecting ribs protruding ¾ in out from panel, and each panel 24" wide:
   1. Products: Subject to compliance with requirements, available products that may be incorporated into the work include, but are not limited to the following:
      a. Deep Root Corporation –Linear Guide #UB-24.
   2. Products shall be installed as follows, unless otherwise indicated on drawings:
      a. 15 gallon trees: #UB-24.
      b. 24 inch box trees: #UB-24.
      c. 36 inch box trees: #UB-24.
      d. 48 in box trees and larger: Per manufacturer's recommendations.
   3. Provide deep root corporation, 'water barrier' for all bamboo installations.

2.13 PLANT MATERIAL

A. Plant and turf materials: ANSI Z60.1; will conform to the varieties specified and be true to botanical name as listed in Hortus Third; nursery-grown plants and turf material true to genus, species, variety, cultivar, stem form, shearing, and other features indicated on Drawings; healthy, normal and unbroken root systems developed by transplanting or root pruning; well-shaped, fully branched, healthy, vigorous stock, densely foliated when in leaf; free of disease, pests, eggs, larvae, and defects such as knots, sun scald, windburn, injuries, abrasions, and disfigurement.
   1. Trees-deciduous and evergreen: Single trunked with a single leader, unless otherwise indicated; symmetrically developed deciduous trees and shrubs of uniform habit of growth; straight boles or stems; free from objectionable disfigurements; evergreen trees and shrubs with well-developed symmetrical tops, with typical spread of branches for each species or variety. Trees with damaged, crooked, or multiple leaders; tight vertical branches where bark is squeezed between two branches or between branch and trunk ("included bark"); crossing trunks; cut-off limbs more than 3/4 inch (19 mm) in diameter; or with stem girdling roots will be rejected.
   2. Ground cover and vine plants: Provide the number and length of runners for the size specified on the Drawings, together with the proper age for the grade of plants specified. Provide vines and ground cover plants well established in removable containers, integral containers, or formed homogeneous soil sections. Plants shall have been grown under climatic conditions like those in the locality of the project. Spray all plants budding into leaf or having soft growth with an anti-desiccant at the nursery before digging.
   3. The minimum acceptable sizes of all plants, measured before pruning with branches in normal position, shall conform to the measurements designated. Plants larger in size than specified may be used with the approval of the Contracting Officer's Representative, with no change in the contract price. When larger plants are used, increase the ball of earth or spread of roots in accordance with ANSI Z60.1.
   4. Provide nursery grown plant material conforming to the requirements and recommendations of ANSI Z60.1. Dig and prepare plants for shipment in a manner that will not cause damage to branches, shape, and future development after planting.
   5. Balled and burlapped (B&B) plant ball sizes and ratios will conform to ANSI Z60.1, consisting of firm, natural balls of soil wrapped firmly with burlap or strong cloth and tied.
   6. Bare root (BR) plants shall have the root system substantially intact, but with the earth carefully removed. Cover roots with a thick coating of mud by "puddling" after the plants are dug.

7. Container grown plants shall have sufficient root growth to hold the earth intact when removed from containers but shall not be root bound.
8. Make substitutions only when a plant (or alternates as specified) is not obtainable and the landscape architect authorizes a change order providing for use of the nearest equivalent obtainable size or variety of plant with the same essential characteristics and an equitable adjustment of the contract price. size of the plants shall correspond with that normally expected for species and variety of available nursery stock, or as specified on the drawings.
9. Collected Stock: Do not use plants harvested from the wild, from native stands, from an established landscape planting, or not grown in a nursery unless otherwise indicated.
10. Existing plants to be relocated, ball sizes shall conform to requirements for collected plants in ANSI Z60.1, and plants shall be dug, handled, and replanted in accordance with applicable sections of these specifications.
11. Right of Inspection: The landscape architect reserves the right to approve or reject at any time upon delivery or during installation any or all plant material not conforming to plan specification, size, variety or condition.

B. Rejection: All plants not conforming to the requirements herein specified shall be considered defective, and such plants, whether in place or not, shall be marked as rejected and immediately removed from the site and replaced with new plant(s) at the contractor's expense. The plants shall be of the species, variety, and size as specified on the drawings or pre-selected at the nursery. Under no condition, will there be any substitution of plants or sizes for those listed on the drawing. In the event of a discrepancy, the landscape architect has final say on all questions as to interpretation.

C. Labeling: Label at least one plant of each variety, size, and caliper with a securely attached, waterproof tag bearing legible designation of common name and full scientific name, including genus and species. Include nomenclature for hybrid variety, or cultivar, if applicable for the plant as shown on Drawings.

D. If formal arrangements or consecutive order of plants is shown on Drawings, select stock for uniform height and spread, and number the labels to assure symmetry in planting.

2.14 SEED

A. Grass Seed: Fresh, clean, dry, new-crop seed complying with "AOSA, Rules for Testing Seed" for purity and germination tolerances. Seed shall be labeled in conformance with U. S. Department of Agriculture rules and regulations under the Federal Seed Act and applicable state seed laws. Wet, moldy, or otherwise damaged seed will not be acceptable.

B. Seed Species: Not less than 90% percent germination, not less than 98% percent pure seed, and not more than 0.5 percent weed seed

C. Application rate:
   1. New turf: 10-12 lbs per 1000 sqft or 400-500 pounds per acre
   2. Overseed: 7-10 lbs per 100 sqft or 300-400 pounds per acre

2.15 SOD

A. Sod: The sod shall consist of live, growing, mature, cut from the field with a minimum of one-half inch (1/2") of soil that completely covers the roots of the sod. The sod shall have a healthy, virile root system of dense, thickly matted roots throughout.
B. The sod shall arrive vigorous and have a lush appearance, uniform texture and dark-green color throughout with no dead or dry edges. The sod shall be sufficiently dense to bear handling and placement without tearing.

C. The sod shall be free of disease and harmful insects, thatch, diseases, nematodes, noxious weeds or other grasses (including nutsedge) and not contain any other matter deleterious to its growth or which might affect its subsistence or hardiness when transplanted.
D. Sod Species: Type of Sod shall be as noted on the drawings. Refer to Planting Legend.

2.16 PLANTER DRAINAGE

A. 4" X 6' deep hole filled with ¾" gravel and lined with filter fabric

B. Filter Fabric: as manufactured by Mirafi model 140N, 4 oz. filter fabric material or approved equal.

PART 3 - EXECUTION

Installation shall conform to the requirements of Section 308 of the "Standard Specifications," except as modified herein.

3.1 GENERAL

A. Prior to the start of work of this Section, all trash, and deleterious materials on the surface of the ground shall be removed and legally disposed of offsite. Verify the following information prior to commencement with work:

B. Verify that topsoil material to be reused is acceptable and has been testes pursuant to all state and local requirements for lead, mercury or any other contaminants.

C. Verify that building and trench backfilling has been completed and inspected.

D. Verify that the subsoil base has been scarified, contoured and compacted.

E. Verify that all existing utilities have been protected and are in good working condition prior to commencement of seeding. Make necessary repairs as required

F. Verify that drainage and grading has been completed per Civil Engineers precise grading plans.

3.2 EXAMINATION

A. Examine areas to receive plants for compliance with requirements and conditions affecting installation and performance:
   1. Verify that no foreign or deleterious material or liquid such as paint, paint washout, concrete slurry, concrete layers or chunks, cement, plaster, oils, gasoline, diesel fuel, paint thinner, turpentine, tar, roofing compound, or acid has been deposited in soil within a planting area.
   2. Do not mix or place soils and soil amendments in frozen, wet, or muddy conditions.
   3. Suspend soil spreading, grading, and tilling operations during periods of excessive soil moisture until the moisture content reaches acceptable levels to attain the required results.
   4. Uniformly moisten excessively dry soil that is not workable and which is too dusty.
   5. Special conditions may exist that warrant a variance in the specified planting dates or conditions. Submit a written request to the Contracting Officer's Representative stating the special conditions and proposal variance.

B. Proceed with installation only after unsatisfactory conditions have been corrected.

C. If contamination by foreign or deleterious material or liquid is present in soil within a planting area, remove the soil and contamination as directed by Architect and replace with new planting soil.

D. Notify Landscape Architect minimum 5 working days prior to the following reviews to be attended at their option:

1. Pre-installation conference.
2. Completion of fine grading.
3. Delivery of plant materials, tree layout and sample plan.
4. After installation of 1 tree for conformance to specified details.

3.3 PLANTING AREA PREPARATION:

A. Soil Preparation: Prior to amending the surface, soil should be cross-ripped to a depth of twelve inches (12") and tilled by mechanical means to a minimum depth of 6” in all planting areas to receive soil preparation. Remove stones larger than one inch (1") and larger in any dimension and sticks, roots, rubbish, and other extraneous matter to a depth of six inches (6"). Dispose of all debris off-site in a legal manner offsite.

B. Planting Areas: To all planting areas, uniformly broadcast soil amendments and thoroughly blend to a minimum six-inch (6") depth by means of a rototiller or equal. Soil Amendments are to be thoroughly incorporate d at the following rates per one thousand square feet (1,000 sf.) by rototilling or other approved method:

4 cu. yds.	Organic amendment
200 lbs.	5-3-1 Commercial fertilizers
10 lbs.	Iron Sulfate
50 lbs.	Agricultural Gypsum
50 lbs	Soil Sulfur

C. Deep water leaching:
   1. After initial soil sample(s) have been taken, soil has been amended and installation / testing of the irrigation system is complete, all areas shall be deep water leached and compacted and settled by continuous application of irrigation water until the soil has received a minimum of 8" of water.
   2. After leaching operation, soil samples shall be taken again by Contractor per Architect's direction and given to the Approved soils laboratory for final testing. Soil test shall meet the following requirements:
      a. ECe - Maximum 2.0.
      b. PH - Minimum 6.00 PH / Maximum 8.0 PH.
      c. SAR- 2.0
   3. Re-application of soil amendment and leaching operation shall be waived by the District if the District determines the EC and pH are at acceptable levels.
   4. Deep water leaching shall be done prior to the application of commercial fertilizer, however, gypsum, soil sulphur and compost must be adequately roto-tilled in to the upper 12” prior to the leaching process.
   5. Do not undertake leaching operations in expansive soils.
   6. Care shall be taken that the rate of application of water does not cause erosion or sluffing of soils.

D. Finish Grade:
   1. Rough grade shall be within one tenth (1/10) of one foot (1') of finish grade.
   2. Refer to the Civil Engineer’s Grading Plans for drainage and grading of all planting area.
   3. Work such as fine grading and light cultivation are required of all planting areas indicated on plan to prepare grades prior to seed or stolon planting.
   4. After approximate finished grades have been established, all soil areas shall be compacted and settled by application of heavy irrigation to a minimum depth of twelve inches (12").
   5. Finish Grading: Grade planting areas to a smooth, uniform surface plane with loose, uniformly fine texture. Roll and rake, remove ridges, and fill depressions to meet finish grades, and ensure proper drainage of the site, eliminate ponding, and direct flow of water to basins away from walks and building edges.

6. All areas shall be graded so the final grades will be two inch (2") below adjacent curbing in shrub/groundcover areas, one inch (1") below adjacent sidewalks in turf areas. Set final grades flush in playfields adjacent to valve boxes.
7. Finished earth berm surfaces shall be smooth and even between contours; shapes shall be to the satisfaction of the Landscape Architect.
8. Before planting, obtain Landscape Architects acceptance of finish grading; restore planting areas if eroded or otherwise disturbed after finish grading.

3.4 WEED ABATEMENT

A. Prior to the installation of the irrigation system, all weed growth shall be removed within the areas designated to be cleared and grubbed. Refer to plans for limit of work.
   1. Perennial grasses and weeds existing in the planting areas require control prior to removal, spray these areas per Pest Control Adviser's or landscape contractor's recommendations (Round-up Pro or other approved herbicide.) Physically remove all weeds and undesirable material from the site.
   2. Remove all dead weeds by rake or hoe to a depth of one to two inches (1" to 2") below the surface of the soil. Remove all weed and/or undesirable grass residue and top growth and dispose of in a legal manner.
   3. Upon completion of all fine grading work and prior to soil preparation, perform weed control measures.
   4. Apply a pre-emergent (Ronstar G or approved equivalent) at a minimum rate of 150 lbs per acre.
   5. Irrigate all areas designated to be planted on which pre-emergent is applied for a minimum of 10 minutes per setting, two settings per applications.

3.5 TREE AND SHRUB INSTALLATION

A. Actual planting shall be performed during those periods when weather and soil conditions are suitable and in accordance with locally acceptable horticultural practices.

B. All irrigation work shall have been reviewed by the Landscape Architect prior to beginning any planting.

C. Installation of all plant material shall be in accordance with the planting details.

D. Locations for plants and outlines of areas to be planted shall be marked on the ground by the Landscape Contractor before any plant pits are dug. The landscape architect shall review all locations. If any underground utilities are encountered in the excavation of the planting areas, notify the Landscape Architect immediately so that other locations for planting may be selected.

E. Excavation for Planting:
   1. Excavation for planting shall include the stripping and stacking of all acceptable topsoil encountered within the areas to be excavated for trenches, tree holes, plant pits and planting beds.
   2. Protect all areas from excessive compaction when trucking plants or other material to the site.
   3. All excavated holes shall have vertical sides with rough surfaces and shall be of a size is at least twice the width and depth of the original plant container. The holes shall be, in all cases, large enough to permit planting without damage to the rootball. Compact soil so depth of rootball is three (3") higher than existing grade.

F. Planting:
   1. No planting shall be done in any area that is under construction, where the grades have not been established or fine graded until the area concerned has been satisfactorily prepared in accordance with these specifications.

2. No more plants shall be distributed in the planting area on any day than can be planted and watered on that day.
3. Containers shall be cut and plants shall be removed in such a manner that the ball of earth surrounding the roots is not broken, and they shall be planted and watered as herein specified immediately after the removal from the containers. Containers shall not be cut or broken prior to placing the plant in the planting areas.
4. The amended surface shall be used for backfill around trees and shrubs in the upper 1/3 of rootball only; use the following formula (thoroughly blended):

Native on site soil (Refer to soils report. Import soil may be used)	6 parts
Organic Amendments	4 parts
Commercial Fertilizer 5-3-1	15 lbs/cy
Iron Sulfate	2 lbs/cy.

   Note: Mix proportions are for bid purposes only. If mix proportions differ from agronomic soils test results notify the architect and or general contractor immediately.
5. Native soil mix (70/30 mix with sand for clay soils) shall be placed at the bottom of each hole, and thoroughly compacted to a height that when a plant is placed in the hole, its root crown is one (1) inch for shrubs and three inches (3") for trees above the established final grade. Any plants, which settle deeper than specified above, shall be raised back to the correct level. After the plant has been placed, additional Native soil mix shall be added to the hole to cover approximately two-thirds (2/3) of the root ball. At this stage, water shall be added to the top of the partly filled hole to thoroughly saturate the root ball and adjacent soil.
6. After the water has completely drained, fertilizer tablets shall be placed in hole evenly spaced around rootball (quantity of tabs per manufacturers recommendations). The remainder of the hole shall then be backfilled with amended backfill mix.

3.6 TURF AREA PREPARATION

A. Prior to planting turf, prepare surface soil as follows:
   1. Remove existing grass, vegetation, and turf to a min 1/2” below top of soil level. Do not mix into surface soil.
   2. Remove stones larger than 1/2 inch in any dimension and sticks, roots, trash, and other extraneous matter to a depth of 6”.
   3. Legally dispose of waste material, including grass, vegetation, and turf, off District's property.
   4. Compost material per CHPS credit ME2.1 if directed.

B. Finish Grading: Grade planting areas to a smooth, uniform surface plane with loose, uniformly fine texture. Grade to within plus or minus 1/2 inch of finish elevation. Roll and rake, remove ridges, and fill depressions to meet finish grades. Limit finish grading to areas that can be planted in the immediate future.

C. Moisten prepared area before planting if soil is dry. Water thoroughly and allow surface to dry before planting. Do not create muddy soil.

D. Before planting, obtain Architect's acceptance of finish grading; restore planting areas if eroded or otherwise disturbed after finish grading.

3.7 SEEDING (OVERSEEDING ONLY)

A. Sow seed with spreader or seeding machine. Do not broadcast or drop seed when wind velocity exceeds 5 mph. Evenly distribute seed by sowing equal quantities in two directions at right angles to each other:
   1. Do not use wet seed or seed that is moldy or otherwise damaged.
   2. Do not seed against existing trees. Limit seed a minimum of 24” from trunks.

B. Sow seed at a total rate recommended by supplier.

C. Rake seed lightly into top 1/8 inch of soil, roll lightly, and water with fine spray.

D. Protect seeded areas from hot, dry weather or drying winds by applying compost mulch or planting soil within 24 hours after completing seeding operations. Soak areas, scatter mulch uniformly to a thickness of 3/16 inch, and roll surface smooth.

3.8 SODDING

A. Lay sod within 24 hours of harvesting. Do not lay sod if dormant or if ground is frozen or muddy. Remove netting where applicable.

B. Lay sod to form a solid mass with tightly fitted joints. Butt ends and sides of sod; do not stretch or overlap. Stagger sod strips or pads to offset joints in adjacent courses. Avoid damage to subgrade or sod during installation. Tamp and roll lightly to ensure contact with subgrade, eliminate air pockets, and form a smooth surface. Work sifted soil or fine sand into minor cracks between pieces of sod; remove excess to avoid smothering sod and adjacent grass:
   1. Lay sod across angle of slopes exceeding 1:3.
   2. Anchor sod on slopes exceeding 1:6 with wood pegs spaced as recommended by sod manufacturer but not less than 2 anchors per sod strip to prevent slippage.

C. Saturate sod with fine water spray within two hours of planting. During first week after planting, water daily or more frequently as necessary to maintain moist soil to a minimum depth of 1-1/2 inches below sod.

3.9 TURF RENOVATION

A. Renovate existing turf.

B. Renovate existing turf damaged by Contractor's operations, such as storage of materials or equipment and movement of vehicles:
   1. Reestablish turf where settlement or washouts occur or where minor regrading is required.
   2. Install new planting soil as required.

C. Remove sod and vegetation from diseased or unsatisfactory turf areas; do not bury in soil.

D. Remove topsoil containing foreign materials such as oil drippings, fuel spills, stones, gravel, and other construction materials resulting from Contractor's operations, and replace with new planting soil.

E. Mow, dethatch, core aerate, and rake existing turf.

F. Remove weeds before seeding. Where weeds are extensive, apply selective herbicides as required. Do not use pre-emergence herbicides.

G. Remove waste and foreign materials, including weeds, soil cores, grass, vegetation, and turf, and legally dispose of them off District's property.

H. Till stripped bare, and compacted areas thoroughly to a soil depth of 6 inches.

I. Apply soil amendments and initial fertilizers required for establishing new turf and mix thoroughly into top 4 inches of existing soil. Install new planting soil to fill low spots and meet finish grades.

J. Retain one of two options in first paragraph below. Revise to include plugs or sprigs if required.

K. Apply seed as required for new turf per section 2.1.

L. Water newly planted areas and keep moist until new turf is established.

3.10 TREE, SHRUB, AND VINE PRUNING

A. Remove only dead, dying, or broken branches as directed by Architect. Do not prune for shape.

B. Prune, thin, and shape trees, shrubs, and vines as directed by Architect.

C. Prune, thin, and shape trees, shrubs, and vines according to standard professional horticultural and arboricultural practices. Unless otherwise indicated by Architect, do not cut tree leaders; remove only injured, dying, or dead branches from trees and shrubs; and prune to retain natural character.

D. Do not apply pruning paint to wounds.

3.11 PLANTING AREA MULCHING

A. Install weed-control barriers (if specified) before mulching according to manufacturer's written instructions. Completely cover area to be mulched, overlapping edges a minimum of 12 inches and secure seams with galvanized pins.

B. Mulch backfilled surfaces of all planting areas and other areas indicated on the plans, unless no mulch is indicated:
   1. Organic Mulch in Planting Areas: Apply 2-inch average thickness of organic mulch extending 12 inches beyond edge of individual planting pit or trench and over whole surface of planting area, and finish level with adjacent finish grades. Do not place mulch within 2-inchs of trunks or stems.
   2. Organic mulch shall not be applied to landscape areas that exceed 3:1 in slope gradient.

3.12 DECOMPOSED GRANITE/ GRAVEL SURFACING

A. Material Certificates: Certificates signed by suppliers certifying that each material complies with requirements.

B. Sample Mock-up: Provide 8 ft. x 8 ft. x 4 inch thick sample mock-up with redwood header for each color of decomposed granite.

C. Verify that subgrade is dry and in suitable condition to support surfacing and imposed loads.

D. Proof-roll subgrade using heavy, pneumatic-tired rollers to locate areas that are unstable or that require further compaction.

E. Do not begin paving installation until unsatisfactory conditions have been satisfactorily corrected.

F. Apply pre-emergent at manufacturer recommended rates (min 4.5 lbs/ 1000sqft for Ronstar G) prior to laying filter fabric.

G. Lay filter fabric (Mirafi N) over entire area. Overlap joints min 8” and staple down @ 36” oc both ways.

H. Place and compact surfacing material at optimum moisture content to required grades, lines, cross sections, and thickness to not less than 95 percent of maximum dry unit weight according to ASTM D 1557:
   1. Shape material to required crown elevations and cross-slope grades.
   2. Place materials in a single layer.
   3. Compacted thickness shall be 4 inches minimum.

I. Edging: Install edgings at perimeter of surfacing except where decomposed granite surfacing abuts asphalt or concrete paving.

J. Ensure that prepared subgrade is ready to receive surfacing.

K. Compact surfacing with 5 ton or larger rollers or using other equipment acceptable to Architect. Compact with vibratory-plate compactors in areas inaccessible to rollers.

L. Examine surface immediately after rolling for indicated crown, grade, and smoothness. Adjust surfaces as required and reroll to obtain smoothness and required elevations.

M. Protection: After final rolling, do not permit vehicular traffic on surfacing.

N. Thickness: Compact to produce the thickness indicated within the following tolerances:
   1. Surface Course: Plus 1/4 inch, no minus.

O. Surface Smoothness: Compact to produce a surface smoothness within the following tolerances as determined by using a 10-foot straightedge applied transversely or longitudinally to surfaced areas:
   1. Surface Course: 1/4 inch.

3.13 PLANTING IN RAISED PLANTERS OR POTS

A. Place a layer of drainage gravel at least 6 inches thick in bottom of planter. Cover bottom with filter fabric and wrap filter fabric 6 inches up on all sides. Duct tape along the entire top edge of the filter fabric, to secure the filter fabric against the sides during the soil-filling process.

B. Fill planter with planting soil. Place soil in lightly compacted layers to an elevation of 1-1/2 inches below top of planter, refill natural settlement.

3.14 EDGING INSTALLATION

A. Wood Edging: Install edging where indicated**.** Mitre cut joints and connections at a 45 degree angle. Fasten each cut joint or connection with two galvanized nails. Anchor with wood stakes spaced up to 36 inches apart, driven at least 1 inch below top elevation of edging. Use two galvanized nails per stake to fasten edging, of length as needed to penetrate both edging and stake and provide 1/2-inch clinch at point. Predrill stakes if needed to avoid splitting. Replace stakes that crack or split during installation process.

B. **[Concrete mow strip / header: Install concrete mow curbs per standard detail and per Section 321313 – Concrete Paving.]**

C. Shovel-Cut Edging: Separate mulched areas from turf areas with a 45-degree, 4- to 6-inch- deep, shovel-cut edge.

D. **[Aluminum edging: as specified on plans.]**

E. Composite Plastic: Trex or equal.

3.15 JUTE MESH / NETTING

A. Install jute netting on areas indicated on drawings and/or planting notes. In areas receiving hydro-seed, apply jute netting after hydro-seeding. Apply jute netting prior to planting container plants. Cut openings in jute a minimum of 1-1/2 times the diameter of the plant pit to allow root crown development, aeration and forming of watering saucer per details. Jute

netting shall be applied to all slopes over 3:1 in slope gradient and greater or as specified on drawings.

B. Jute Netting Installation: Install jute netting at all planting areas with 30 percent slope or greater:
   1. Make check slots before netting is rolled out. Dig narrow trench across slope, perpendicular to direction of flow. Fold jute netting the same length as trench and press together. Location of check slots shall maximum of 50 feet apart.
   2. Roll netting parallel to slope contours. Netting shall completely cover all areas indicated to receive netting. Overlaps shall be ample and well-stapled.
      a. Lay netting smoothly, loosely and in continuous contact with soil surface at all points.
      b. Install netting without stretching. Where one roll of netting ends and second roll starts, up-slope piece shall be brought over buried end of second roll so that there is 12-inch overlap. Where two or more widths of netting are applied side-by-side, overlap shall be not less than 3-inches.
   3. Staple overlapping edges that run parallel to direction of flow at 2-inch intervals. Outside edges, centers and overlaps on embankments shall be staple across slope at 6-inch intervals.
   4. Top dress jute netting area with thin layer of planting mix. After top dressing, yarns shall be still visible.
   5. Spread loose planting mix over outside edges of netting to allow for smooth entry of water.
   6. Clods that hold jute netting off ground shall be stamped into soil. Force jute netting down into depressions and hold in place with staple.
   7. Install plant materials through jute netting.
   8. Maintain jute netting until Work under the Contract has been completed and accepted. Maintenance shall consist of repair of eroded areas and repair, replacement and re-stapling of loose or undermined jute netting. Replace damaged plant materials as necessary.

3.16 ROOT-BARRIER INSTALLATION

A. Install root barrier where trees are planted within 60 inches of paving or other hardscape elements, such as walls, curbs, and walkways unless otherwise shown on Drawings.

B. Align root barrier vertically with bottom edge angled at 20 degrees away from the paving or other hardscape element and run it linearly along and adjacent to the paving or other hardscape elements to be protected from invasive roots.

C. Install root barrier continuously in each direction from the tree trunk. If trees are spaced closer, use a single continuous piece of root barrier:
   1. Position top of root barrier per manufacturer's recommendations.
   2. Do not distort or bend root barrier during construction activities.
   3. Do not install root barrier surrounding the root ball of tree.

3.17 WATERING

A. Apply water to all planted areas during operations and thereafter, until acceptance of the work. Apply water in sufficient quantities and as often as seasonal conditions require always keeping the planted areas sufficiently moist, well below the root system of grass and plants.

B. All turf areas shall be kept damp at all times and irrigation should be adjusted accordingly. This normally would involve four (4) to six (6) watering periods daily, each watering period (ON) regulated to just dampen the mulch without creating run off.
   1. Intervals between irrigation (OFF) sequences should be judged by the length of the time mulch remain damp. Once the mulch begins to dry out, the water (ON) sequence should be repeated.

3.18 ESTABLISHMENT AND MAINTENANCE PERIOD

A. The Contractor shall continuously maintain all areas involved in this contract during the progress of the work and during the 30 day establishment period for all turf and Ground cover areas and (90) day maintenance period for the Athletic Playfields excluding the artificial turf stadium until final acceptance of the work by the Owner.

B. Plant establishment period: The contractual establishment period shall be for no less than thirty - (30) continuous calendar days. The contractual establishment period begins on the first day after all planting in this project is completed and accepted and the planted areas are brought to a neat, clean and weed free condition. (All turf areas and Ground cover areas installed by flats shall be reviewed under the establishment period).

C. Landscape maintenance period: The contractual establishment period shall be for no less than Ninety - (90) continuous calendar days. ***Upon the written acceptance of the substantial completion of the landscape and irrigation installation by the landscape architect and the owner, the landscape maintenance period may begin***. The Contractor shall request an on site review of the landscape at the end of the establishment period. The turf areas shall show an even, healthy stand of grass free of patches or bare/sparse spots. The contractor will be notified in writing the acceptance of the establishment period and commencement of the maintenance period. If such criteria are met to the satisfaction of the District/owner/ landscape architect, a field notification shall be issued to the Contractor from the District, to establish the effective beginning date of the Maintenance Phase. The District/owner/ landscape architect has the ultimate authority in setting the beginning date for the maintenance period.

   1. Any day when the Contractor fails to adequately maintain plants replace unsuitable plants or do weed control or other work, as determined necessary by the Landscape Architect and/or owner's field representative will not be credited as one of the landscape maintenance working days.
   2. In order to carry out the landscape maintenance work, the Contractor shall furnish protective barriers/fences around landscape areas, sufficient men and adequate equipment to perform the work during the maintenance period. The Contractor shall be responsible for maintaining adequate protection of the entire project area. Damaged areas caused by erosion, tire damage, graffiti, pests or other damage as deemed by the District shall be repaired at the Contractor's expense.

D. All sidewalks, paved areas and other areas adjacent to the planting areas shall be cleaned of all debris, soil, or other materials at intervals of not more than seven (7) days.

   1. Improper maintenance or possible poor condition of any planting during the scheduled landscape maintenance period may cause postponement of the final acceptance of the landscape maintenance period. Contractor shall bear all costs for extension of the Landscape maintenance period.
   2. In the event there is evidence of poor-100% germination of the turf grass seed or poor performance of the sod or shrub/groundcover areas, the contractor shall obtain an agronomic soils test for each area and provide copies of the test results to the District to verify the appropriate use and incorporation of amendments per agronomic soils reports and appropriateness of all maintenance work performed. If additional fertilizers are needed, up to a maximum of 25% beyond the amount specified, such amendments shall be provided by the Contractor at no additional cost to the District.
   3. Depressions caused by vehicles, bicycles, or foot traffic shall be filled and leveled. Replant damaged areas with same material unless area was prior seed with turf grass or a Hydroseed mix – plant area with sod or select shrub species identified in seed mix at one (1) gallon minimum or as readily available. Replant at no expense to District unless damaged was caused by other trade contractors.

E. Plant Maintenance:

1. All areas shall be kept free of debris, and all planted areas shall be weeded at intervals of not more than ten (10) days. Watering, mowing, fertilization, spraying and pest control, as may be required, shall be included in the maintenance period. Maintenance shall include gopher control.
    a. All personnel on the project shall be welled trained, clean, and neat at all times and be conversant with these specifications.
    b. All work shall be performed in accordance with the best landscape maintenance practices and in keeping with the high aesthetic level of facilities being maintained.
    c. Contractor shall be responsible for removing all weeds in joints of sidewalks, curbs, and hardscape throughout the project.
    d. All landscape areas shall be patrolled weekly to check for vandalism damage, broken tree branches, rodents, insects, pest and diseases.
    e. Water Management:
    f. Water only as required to allow penetration into the soil and avoid excess run-off. Once plant material is established, water only as needed to maintain healthy plant material.
    g. Avoid water waste by setting controllers appropriately for current season and weather.
    h. Avoid blocking the clear view of signs, illumination of light poles fixtures, the airflow out of vents and conflict with pedestrian and vehicles and their views.
    i. Safety of users shall be a prime goal of maintenance especially in regard to pruning of trees and trimming of ground covers away from walkways and/or structures.
    j. The Contractor, at his own expense, shall replace all dead or damaged plant material during the maintenance period and prior to final acceptance of the maintenance period.
2. Pruning Trees – prune trees to select and develop permanent scaffold branches that are smaller in diameter than the trunk branch to which they are attached that have vertical spacing from 18” to 48” and radial orientation. Other pruning shall be performed to correct the following:
    a. So permanent scaffold branches do not overlay one another.
    b. To eliminate diseased or damaged growth.
    c. To eliminate narrow V-shaped branch forks that lack strength.
    d. To reduce toppling and wind damage by thinning out crowns.
    e. To maintain growth within space limitation
    f. To maintain natural appearance.
    g. To balance crown with roots.
    h. All tree pruning shall be done with hand equipment operated from the ground. If trees are larger than able to be pruned in such a manner, the condition will be brought to the attention of the District.
    i. Remove no more than 50% of a plant’s foliage during pruning operations.
    j. Topping of trees will not be tolerated unless approved by the District.
3. Under no circumstances shall stripping of lower branches, (raising up or skirting) of young trees be permitted. Lower branches shall be retained in a pinched back condition with as much foliage as possible to promote caliper trunk growth (tapered trunk). Lower branches can be cut flush with the trunk only after the tree is able to stand erect without staking or other support. No stubbing of major branches will be accepted.
4. Evergreen trees shall be thinned out and shaped when necessary in prevent wind and storm damage. The primary pruning of deciduous trees shall be done during the dormant season. Damaged trees or those that constitute health or safety problems shall be pruned at any time of the year as required.
5. Post fertilize all turf areas at the end of every 45-60 days (of maintenance) at the rate of three pounds (3 lbs.) per one thousand square feet (1,000 sf.) using ammonium sulfate, 21-7-14, evenly applied and thoroughly watered in. The first application should occur 14 days after planting. Thirty (30) days after planting fertilize with 20-6-10 fertilizer at rate of three to four (3 to 4) lbs per 1,000 square feet. Water thoroughly. In early fall and spring, substitute a complete fertilizer such as 16-6-8 or equal for the ammonium sulfate at a rate of 6 lbs. per 1000 sf.

6. Mowing of turf will commence when turf grass has reached a height of one inch (1"). The height of cut will be ½" to 3/4" as directed by the Grounds Supervisor. Mowing will be at least weekly after the first cut. Turf must be well established and free of bare spots and weeds to the satisfaction of the Landscape Architect prior to final acceptance by the Owner.
    a. Excess grass clippings shall be picked up and removed from site. Don not leave grass clipping on newly cut turf grass, remove immediately.
7. The Contractor shall maintain the irrigation systems in a like new operating condition; adjusting head heights and spray arcs as necessary. The Contractor is responsible for proper watering of all planting areas, for providing any necessary supplemental water as may be required, and shall replace any material damaged due to improper moisture.
8. During the maintenance period, the Contractor shall be responsible for maintaining adequate protection for all planting areas. Removing all litter and foreign debris from planters and planting areas. Any damaged areas shall be repaired and any plant materials replaced at the Contractor's expense. Replace all shrubs, trees and groundcover deemed to be in poor health or dead during the maintenance period.
9. Weed Control: Keep basins and areas between plants free of weeds. Use recommended legally approved pre-emergent herbicides and removal by hand methods. Avoid frequent soil cultivation that destroys shallow roots. Use mulches to help prevent weed seed germination. Avoid post-emergent herbicides in groundcover areas where overspray may kill young rooted cuttings.
    a. Use of chemical spraying maybe necessary to rid turf areas of noxious weeds.
10. Insect Control: Maintain a reasonable control with approved materials and methods that are legally accepted in the area.
11. The Contractor's maintenance period will be extended past the (90) days if these provisions are not filled.

3.19 GUARANTEE AND REPLACEMENT

A. Any turf/groundcover area found to be dead or in poor condition due to such improper weed abatement, the Contractor at his expense shall replace practices and/or methods, as determined by the Landscape Architect and/or Owner.

B. The Landscape Contractor at no additional cost to the Owner shall supply material and Labor involved in the replacing of material.

C. All plant material installed under the contract shall be guaranteed against any and all poor health, inadequate or inferior materials and or improper installation for a period of one (1) year. This guarantee shall commence on the date of final acceptance of the project after the completion of the contracts maintenance period. Any plant found to be dead or in poor condition resulting from improper planting; fertilization as determined by the District/Landscape Architect shall be replaced by the contractor at no expense to the District.

D. Any plant material –trees, shrubs, groundcover and/or turf –found to be dead, missing or in poor condition as determined by the Landscape Architect during the contract maintenance period shall be replaced immediately and not at the end of the contract maintenance period. The Landscape Architect shall be the sole judge as to the condition of plant material. The contractor shall replace material replaced within the guarantee period within seven (7) days.

E. All plant material shall have new growth trimmed neatly, turf shall be mowed, and all hardscape shall be cleaned prior to final acceptance.

END OF SECTION 329300

SECTION 32 94 00
TREE PROTECTION AND TRIMMING

PART 1 GENERAL

1.1 SUMMARY

A. This Section includes the protection and trimming of trees that interfere with, or are affected by, execution of the Work, whether temporary or new construction.

B. Related Sections:

1. Section 311000 – Site Clearing.
2. Section 312000 – Earthwork
3. Section 328400 – Irrigation Systems.
4. Section 329300 – Planting.
5. Section 334000 – Sub drainage.

1.2 QUALITY ASSURANCE

A. Arborist Qualifications: An arborist certified by the International Society of Arboriculture or licensed in the jurisdiction where Project is located and employed by the Contractor.

B. Tree Pruning Standards: Comply with ANSI A300, "Trees, Shrubs, and Other Woody Plant Maintenance--Standard Practices," unless requirements that are more stringent are indicated.

PART 2 PRODUCTS

2.1 MATERIALS

A. Drainage Fill: Selected crushed stone, or crushed or uncrushed gravel, washed, ASTM D 448, Size 24, with 90 to 100 percent passing a 2-1/2-inch sieve and not more than 10 percent passing a 3/4-inch sieve.

B. Topsoil: Fertile, friable, surface soil, containing natural loam and complying with ASTM D 5268. Provide topsoil that is free of stones larger than 1 inch in any dimension and free of other extraneous or toxic matter harmful to plant growth. Obtain topsoil only from well-drained sites where soil occurs in depth of 4 inches or more; do not obtain from bogs or marshes. Topsoil shall be tested for agronomic purposes by a certified and approved testing lab.

C. Filter Fabric: Manufacturer's standard, nonwoven, pervious, geotextile fabric of polypropylene, nylon, or polyester fibers.

D. Chain Link Fence: Metallic-coated steel chain link fence fabric, 60 inches high, minimum; line posts, 1.9 inches in diameter; terminal and corner posts, 2-3/8 inches in diameter; and other accessories for a complete fence system.

E. Orange vinyl construction fencing, snow fencing or other similar fencing should be at least 4 feet high and supported by 6’ steel T-posts with compliant safety caps.

PART 3 EXECUTION

3.1 PREPARTAION

A. Contractor is responsible for the protection of all trees that will remain within the limits of work.

B. Contractor arborist shall identify the trees that must be protected.

C. Contractor arborist shall supervise protection, pruning and repairing of existing trees.

D. Temporary Fencing: Install temporary fencing located as indicated or outside the drip line of trees to protect remaining vegetation from construction damage.

E. Install chain link fence according to ASTM F 567 and manufacturer's written instructions.

F. Protect tree root systems from damage due to noxious materials caused by runoff or spillage while mixing, placing, or storing construction materials. Protect root systems from flooding, eroding, or excessive wetting caused by dewatering operations.

G. Do not store construction materials, debris, or excavated material within the drip line of remaining trees. Do not permit vehicles or foot traffic within the drip line; prevent soil compaction over root systems.

3.2 EXCAVATION

A. Install shoring or other protective support systems to minimize sloping or benching of excavations.

B. Do not excavate within drip line of trees, unless otherwise indicated.

C. Where excavation for new construction is required within drip line of trees, hand clear and excavate to minimize damage to root systems. Use narrow-tine spading forks and comb soil to expose roots.

D. Relocate roots in backfill areas where possible. If encountering large, main lateral roots, expose roots beyond excavation limits as required to bend and relocate them without breaking. If encountered immediately adjacent to location of new construction and relocation is not practical, cut roots approximately 3 inches back from new construction.

E. Do not allow exposed roots to dry out before placing permanent backfill. Provide temporary earth cover or pack with peat moss and wrap with burlap. Water and maintain in a moist condition. Temporarily support and protect roots from damage until they are permanently relocated and covered with soil.

F. Where utility trenches are required within drip line of trees, tunnel under or around roots by drilling, auger boring, pipe jacking, or digging by hand.

G. Where excavation or construction within the critical root zone of a tree is necessary and less than 50% of the root system will be affected, root pruning can occur. Cut roots cleanly prior to mechanical excavation near tree to minimize damage to remaining roots and reduce the risk of causing disease, decay and instability. Do not cut main lateral roots or taproots; cut only smaller roots that interfere with installation of utilities. Cut roots with sharp pruning instruments; do not break or chop. No roots over 1” in size shall be cut unless under the direct supervision of a certified Arborist.

H. As a temporary measure, place burlap material and/or spread mulch over exposed roots after cuts are made and before soil is replaced. Keep this material damp until backfilled to prevent the fine roots from drying and dying.

3.3 RE-GRADING

A. Grade Lowering: Where new finish grade is indicated below existing grade around trees, slope grade away from trees as recommended by qualified arborist, unless otherwise indicated.

B. Root Pruning: Prune tree roots exposed during grade lowering. Do not cut main lateral roots or taproots; cut only smaller roots. Cut roots with sharp pruning instruments; do not break or chop.

C. Minor Fill: Where existing grade is 6 inches or less below elevation of finish grade, fill with topsoil. Place topsoil in a single uncompacted layer and hand grade to required finish elevations.

D. Moderate Fill: Where existing grade is more than 6 inches, but less than 12 inches, below elevation of finish grade, place drainage fill, filter fabric, and topsoil on existing grade as follows:

E. Carefully place drainage fill against tree trunk approximately 2 inches above elevation of finish grade and extend not less than 18 inches from tree trunk on all sides. For balance of area within drip-line perimeter, place drainage fills up to 6 inches below elevation of grade.

F. Place filter fabric with edges overlapping 6 inches minimum.

G. Place fill layer of topsoil to finish grade. Do not compact drainage fill or topsoil. Hand grade to required finish elevations.

3.4 TREE PRUNING

A. Prune remaining trees affected by temporary and new construction.

B. Prune remaining trees to compensate for root loss caused by damaging or cutting root system. Provide subsequent maintenance during Contract period as recommended by qualified arborist.

C. Pruning Standards: Follow current ANSI A300 Standards for Tree Care Operations – Tree, Shrub, and Other Woody Plant Management – Standard Practices (Pruning). Never remove more than 25% of a tree's crown at one time:

1. Type of Pruning: Crown cleaning.
2. Type of Pruning: Crown thinning.
3. Type of Pruning: Crown raising.
4. Type of Pruning: Crown reduction.
5. Type of Pruning: Vista pruning.
6. Type of Pruning: Crown restoration.
7. Cut branches with sharp pruning instruments; do not break or chop.
8. Chip branches removed from trees. Spread chips where indicated or as directed by Architect.
9. Use the three-cut method to remove large or heavy limbs. If the whole limb must be removed, properly prune to the trunk without cutting into the branch bark ridge. Do not leave a stub or flush cut into the trunk.

3.5 TREE REPAIR AND REPLACEMENT

A. Promptly repair trees damaged by construction operations within 24 hours. Treat damaged trunks, limbs, and roots according to written instructions of the qualified arborist.

B. Remove and replace dead and damaged trees that the qualified arborist determines to be incapable of restoring to a normal growth pattern.

C. Contractor shall replace all trees which Contractor has damaged. Contractor shall replace these trees with trees of the same size and species. When damaged trees are more than 10 inches in caliper size (measured 12 inches above grade) these trees may be replaced with trees with a caliper size of 8 inches minimum.

D. Contractor shall compensate the District for all damaged trees that are more than 10 inches in caliper size and replaced with trees of smaller caliper. The district will request will request a Tree Appraisal from an appropriate Consultant. Any fees associated with this appraisal will be at Contractor's expense. The value/replacement cost will be determined by adjusting a tree's basic value by its condition, location, and species using the most recent edition of the Guide for Plant Appraisal, published by the Council of Tree and Landscape Appraisers.

E. Aerate surface soil, compacted during construction, 10 feet beyond drip line and no closer than 36 inches to tree trunk. Drill 2-inch- diameter holes a minimum of 12 inches deep at 24 inches on center. Backfill holes with an equal mix of augured soil and approved compost humus material.

3.6 DISPOSAL OF WASTE MATERIALS

A. Dispose of materials in a legal and safe manner as established by local governing body. Recycling is encouraged whenever possible. Burning is not permitted.

END OF SECTION 329400

SECTION 33 11 00
WATER UTILITY DISTRIBUTION PIPING

PART 1 GENERAL

1.01 SUMMARY

A. Section Includes
   1. Pressure Piping and Joints, Fittings, and Connections
   2. Pipeline Identification
   3. Valves
   4. Hydrants
   5. Backflow Prevention Devices
   6. Accessories
   7. Thrust Blocking

B. Products Supplied But Not Installed Under This Section

C. Products Installed But Not Supplied Under This Section

D. Related Sections
   1. 31 23 26 Base Course
   2. 32 13 13 Concrete Paving

E. Allowances

F. Unit Prices

G. Measurement Procedures

H. Payment Procedures

I. Alternates

1.02 REFERENCES

A. The "Greenbook" Standard Specifications For Public Works Construction, Current Edition (S.S.P.W.C.)

B. ASSE Standard #1013 - Performance Requirements for Reduced Pressure Principle Backflow Preventers and Reduced Pressure Principle Fire Protection Backflow Preventers

C. ASSE Standard #1015 – Performance Requirements for Double Check Backflow Prevention Assemblies and Double Check Fire Protection Backflow Prevention Assemblies

D. AWWA C104 - Cement-Mortar Lining for Ductile- Iron Pipe and Fittings.

E. AWWA C105 – Polyethylene Encasement for Ductile-Iron Pipe Systems.

F. AWWA C110 –Ductile-Iron and Gray-Iron Fittings

G. AWWA C111 - Rubber-Gasket Joints for Ductile-Iron Pressure Pipe and Fittings.

H. AWWA C151 - Ductile-Iron Pipe Centrifugally Cast

I. AWWA C300 - Reinforced Concrete Pressure Pipe, Steel Cylinder Type

J. AWWA C502 - Dry-Barrel Fire Hydrants.

K. AWWA C600 - Installation of Ductile-Iron Water Mains and Their Appurtenances.

L. AWWA C651 - Disinfecting Water Mains.

M. AWWA C900 - Polyvinyl Chloride (PVC) Pressure Pipe and Fabricated Fittings, 4 In. Through 12 In. for Water Transmission and Distribution.

N. AWWA C901 - Polyethylene (PE) Pressure Pipe and Tubing, ½ In. through 3 In. for Water Service.

O. AWWA M9 – Concrete Pressure Pipe.

P. AWWA M11 – Steel Pipe: A Guide for Design and Installation.

Q. AWWA M14 – Backflow Prevention and Cross-Connection Control.

R. AWWA M17 - Installation, Field Testing, and Maintenance of Fire Hydrants.

S. AWWA M23 - PVC Pipe: Design and Installation.
T. AWWA M41 – Ductile-Iron Pipe and Fittings
U. AWWA M44 – Distribution Valves: Selection, Installation, Field Testing, and Maintenance.
V. AWWA M45 – Fiberglass Pipe Design
W. AWWA M55 – P.E. Pipe – Design and Installation
X. ASTM B88 – Standard Specification for Seamless Copper Water Tube.
Y. ACPA – American Concrete Pipe Association, Concrete Pipe Design Manual.
Z. ACPA – American Concrete Pipe Association, Concrete Pipe Installation Manual.
AA. CDA – Copper Development Association, Copper Tube Handbook.
BB. NFPA 1963 – Standard for Fire Hose Connections.
CC. UL246 – Standard for Hydrants for Fire Protection Services.
DD. NFPA #24 2016 Edition

1.03 DEFINITIONS
A. ASSE: American Society of Sanitary Engineers
B. AWWA: American Water Works Association

1.04 SYSTEM DESCRIPTIONS
A. Design Requirements, Performance Requirements
1. All specified construction materials and construction methods shall comply with the "Greenbook", Standard Specifications for Public Works Construction, current edition.

1.05 SUBMITTALS
A. General
B. Product Data
1. Submit manufacturer's product data for products specified.
a. Include technical data for pipe, accessories, gaskets, joints, and couplings.
C. Shop Drawings
D. Samples
E. Quality Assurance/Control Submittals
1. Design Data, Test Reports, Certificates, Manufacturers' Instructions, Manufacturers' Field Reports, Qualification Statements
a. Disinfection Submittals
1. Submit in accordance with S.S.P.W.C., Section 306-8.9.4.2 including the following:
a. Testing, Disinfection, Flushing and Dechlorinating Plan.
b. Written permission to discharge into sewer or storm drain.
c. Laboratory report for disinfection testing.
b. Hydrostatic Pressure Test
1. Submit test results in accordance with AWWA C600 or C605.
F. Closeout Submittals
1. As-Built Drawings
a. Submit as-built drawings indicating location of pipe runs, connections, and depths.

b. Identify and describe unexpected variations to subsoil conditions or discovery of uncharted utilities.

1.06 QUALITY ASSURANCE
- A. Qualifications
  1. Provide valves from the same manufacturer.
  2. Provide hydrants from the same manufacturer.
  3. Provide Backflow Prevention Devices from the same manufacture.
  4. All materials/products shall be new.
- B. Regulatory Requirements
  1. No pipe, pipe fitting, or any other fitting or fixture intended to convey or dispose water for human consumption for drinking or cooking is allowed in the domestic plumbing system, if they do not meet the low lead definition of Health and Safety Code 116875. Weighted average lead content of the wetted surface area of pipes, fittings and fixtures may not exceed 0.25 percent.
- C. Certifications
- D. Field Samples
- E. Mock-ups
- F. Pre-installation Meetings

1.07 DELIVERY, STORAGE, AND HANDLING
- A. Packing, Shipping, Handling, and Unloading
  1. In accordance with S.S.P.W.C., Section 306.
- B. Acceptance at Site
  1. In accordance with S.S.P.W.C., Section 306.
- C. Storage and Protection
  1. In accordance with S.S.P.W.C., Section 306.
- D. Waste Management and Disposal

1.08 PROJECT CONDITIONS
1.09 SEQUENCING
1.10 SCHEDULING
1.11 WARRANTY
1.12 SYSTEM STARTUP
1.13 OWNER'S INSTRUCTIONS
1.14 COMMISSIONING
1.15 MAINTENANCE

PART 2 PRODUCTS

2.01 MANUFACTURERS
2.02 EXISTING PRODUCTS
2.03 MATERIALS
- A. General
  1. Provide piping materials and factory-fabricated piping products of sizes, types, pressure ratings, and capacities as indicated on drawings.
  2. Provide sizes and types matching piping and equipment connections; provide fittings of materials which match pipe materials used in potable water systems.
  3. Where more than one type of materials or product is indicated, selection is Installer's option.

B. Pressure Piping and Joints, Fittings, and Connections
    1. Ductile Iron Pipe (DIP)
        a. S.S.P.W.C. Table 209-1.1.2.
    2. Fabricated Steel Pipe and Fittings
        a. S.S.P.W.C. Table 209-2.2.1.
    3. Mill-Type Steel Pipe
        a. S.S.P.W.C. Table 209-2.3.1.
    4. Stainless Steel Water Pipe
        a. S.S.P.W.C. Table 209-2.4.1.
    5. Concrete Pressure Pipe
        a. S.S.P.W.C. Table 209-3.2.
    6. PVC Pressure Pipe
        a. S.S.P.W.C. Table 209-4.2.
    7. High-Density Polyethylene (HDPE) Solid Wall Pressure Pipe
        a. S.S.P.W.C. Table 209-5.2.
    8. Fiberglass Pressure Pipe
        a. S.S.P.W.C. Table 209-6.2.
C. Pipeline Identification
    1. S.S.P.W.C., Table 209-7.2.
D. Flanged and Threaded Connections
    1. S.S.P.W.C., Section 212-2.
E. Valve Actuators, Extensions, and Valve Boxes
    1. S.S.P.W.C., Section 212-4.
F. Valves
    1. S.S.P.W.C., Section 212-5.
G. Hydrants
    1. S.S.P.W.C., Section 212-6.
    2. Shall be LFAHJ approved.
    3. Color Scheme and Finish: LFAHJ standard.
H. Backflow Prevention Devices
    1. S.S.P.W.C., Section 212-7.
    2. Shall be LFAHJ approved.
    3. Color Scheme and Finish: LFAHJ standard.
I. Expansion Joints
    1. S.S.P.W.C., Section 212-9.
J. Service Laterals, Meters, and Meter Boxes
    1. S.S.P.W.C., Section 212-10.
K. Pressure Gauges
    1. S.S.P.W.C., Section 212-11.
L. Thrust Blocking
    1. S.S.P.W.C., Section 306-8.8.3.

2.04 MANUFACTURED UNITS
2.05 EQUIPMENT
2.06 COMPONENTS
2.07 ACCESSORIES
2.08 MIXES
2.09 FABRICATION
2.10 FINISHES
2.11 SOURCE QUALITY CONTROL

PART 3 EXECUTION

3.01 INSTALLERS

3.02 EXAMINATION

A. Site Verification of Conditions
   1. Verify that trenches are cut and ready to receive work, and excavations, dimensions, and elevations are as indicated.
   2. Beginning of installation means acceptance of existing conditions.

3.03 PREPARATION

A. Protection

B. Surface Preparation
   1. Trench Excavation
      a. In accordance with S.S.P.W.C., Section 306-3.
   2. Correct over excavation with fill material or sand.
   3. Remove large stones or other hard matter which could damage drainage tile or impede consistent backfilling or compaction.

3.04 ERECTION

3.05 INSTALLATION

A. Pressure Pipes and Fittings
   1. General
      a. Install in accordance with S.S.P.W.C., Section 306-8.
      b. Maintain separation of products conveying potable water and products conveying fluids other than potable water.
      c. Route pipe in as straight lines as possible.
      d. Install pipe to allow for expansion and contraction without stressing pipe joints.
   2. Ductile Iron Pipe (DIP)
      a. Install in accordance with S.S.P.W.C., Section 306-8.2.
   3. Steel Pipe
      a. Install in accordance with S.S.P.W.C., Section 306-8.3.
   4. Concrete Pressure Pipe
      a. Install in accordance with S.S.P.W.C., Section 306-8.4.
   5. PVC Pressure Pipe
      a. Install in accordance with S.S.P.W.C., Section 306-8.5.
   6. High-Density Polyethylene (HDPE) Solid Wall Pressure Pipe
      a. Install in accordance with S.S.P.W.C., Section 306-8.6.
   7. Fiberglass Pressure Pipe
      a. Install in accordance with S.S.P.W.C., Section 306-8.7.

B. Pipeline Identification
   1. Install in accordance with S.S.P.W.C., Table 209-7.2.

C. Valves
   1. Install in accordance with S.S.P.W.C., Section 306-8.8.
   2. Provide valve boxes over underground valves.

D. Hydrants
   1. Install in accordance with S.S.P.W.C., Section 306-8.8.
   2. Install in accordance with LAHJ requirements.
   3. Paint Finish: LFAHJ standard.

E. Backflow Prevention Devices
   1. Install in accordance with S.S.P.W.C., Section 306-8.8.
   2. Install in accordance with AWWA M14.
   3. Install in accordance with LAHJ requirements.
   4. Paint Finish: LFAHJ standard.

F. Thrust Blocking

1. Install in accordance with S.S.P.W.C., Section 306-8.8.3.

3.06 APPLICATION
3.07 CONSTRUCTION
3.08 REPAIR/RESTORATION
3.09 RE-INSTALLATION
3.10 FIELD QUALITY CONTROL
- A. Site Tests, Inspection
  1. Project Inspector of Record shall be present for all testing and inspections.
  2. Pipeline Pressure Testing, Disinfection, and Commissioning
     - a. General
       1. In accordance with S.S.P.W.C., Section 306-8.9. et. seq.
     - b. Hydrostatic Pressure Test
       1. Test in accordance with S.S.P.W.C., Section 306-8.9.2.
     - c. Testing of Valves and Appurtenances
       1. Test in accordance with S.S.P.W.C., Section 306-8.9.3.
     - d. Disinfection
       1. In accordance with S.S.P.W.C., Section 306-8.9.4.
- B. Manufacturers' Field Services
- C. See NFPA #24 for fire service underground testing.

3.11 ADJUSTING
3.12 CLEANING
3.13 DEMONSTRATION
3.14 PROTECTION
3.15 SCHEDULES

END OF SECTION

SECTION 33 30 00
SANITARY SEWERAGE UTILITIES

PART 1 GENERAL

1.01 SUMMARY
- A. Section Includes
  1. Gravity Piping and Joints, Fittings, and Connections
  2. Pipe Joint Types and Materials
  3. Pipeline Identification
  4. Precast Concrete Sanitary Sewerage Items
  5. Metal Covers, Grates, Frames, and Accessories
- B. Products Supplied But Not Installed Under This Section
- C. Products Installed But Not Supplied Under This Section
- D. Related Sections
  1. 31 23 26 Base Course
  2. 32 13 13 Concrete Paving
- E. Allowances
- F. Unit Prices
- G. Measurement Procedures
- H. Payment Procedures
- I. Alternates

1.02 REFERENCES
- A. The "Greenbook" Standard Specifications for Public Works Construction, Current Edition (S.S.P.W.C.)
- B. ASTM C478 – Standard Specification for Circular Precast Reinforced Concrete Manhole Section
- C. ASTM A48 – Standard Specification for Gray Iron Castings
- D. AASHTO M199 – Standard Specification for Precast Reinforced Concrete Manhole Sections

1.03 DEFINITIONS

1.04 SYSTEM DESCRIPTIONS
- A. Design Requirements, Performance Requirements
  1. All specified construction materials and construction methods shall comply with the "Greenbook", Standard Specifications For Public Works Construction, current edition.

1.05 SUBMITTALS
- A. General
- B. Product Data
  1. Submit manufacturer's product data for products specified.
     a. Include technical data for pipe, accessories, gaskets, joints, and couplings.
- C. Shop Drawings
- D. Samples
- E. Quality Assurance/Control Submittals
- F. Closeout Submittals
  1. As-Built Drawings
     a. Submit as-built drawings indicating location of pipe runs, connections, invert elevations, manholes, and cleanouts.

b. Identify and describe unexpected variations to subsoil conditions or discovery of uncharted utilities.

2. Closed Circuit Television (CCTV) Inspection
    1. Submit video archives to owner.

1.06 QUALITY ASSURANCE
- A. Qualifications
    1. Provide all manholes from the same manufacturer.
    2. Provide all cleanouts from the same manufacturer.
- B. Regulatory Requirements
- C. Certifications
- D. Field Samples
- E. Mock-ups
- F. Pre-installation Meetings

1.07 DELIVERY, STORAGE, AND HANDLING
- A. Packing, Shipping, Handling, and Unloading
    1. In accordance with S.S.P.W.C., Section 306.
- B. Acceptance at Site
    1. In accordance with S.S.P.W.C., Section 306.
- C. Storage and Protection
    1. In accordance with S.S.P.W.C., Section 306.
- D. Waste Management and Disposal

1.08 PROJECT CONDITIONS
1.09 SEQUENCING
1.10 SCHEDULING
1.11 WARRANTY
1.12 SYSTEM STARTUP
1.13 OWNER'S INSTRUCTIONS
1.14 COMMISSIONING
1.15 MAINTENANCE

PART 2 PRODUCTS

2.01 MANUFACTURERS
- A. Precast Concrete Sanitary Sewerage Items
    1. Jenson Precast, 14221 San Bernardino Ave., Fontana, CA 92335, or equal.
    2. Oldcastle Precast, Inc., 10650 Hemlock Ave., Fontana, CA 92337
- B. Metal Covers, Grates, Frames, and Accessories
    1. South Bay Foundry, 9444 Abraham Way, Santee, CA 92071, or equal.
    2. Alhambra Foundry Company, 1147 Meridian Ave., Alhambra, CA 91802

2.02 EXISTING PRODUCTS
2.03 MATERIALS
- A. General
    1. Provide piping materials and factory-fabricated piping products of sizes, types, pressure ratings, and capacities as indicated on drawings.

2. Provide sizes and types matching piping and equipment connections; provide fittings of materials which match pipe materials used in potable water systems.
3. Where more than one type of materials or product is indicated, selection is Installer's option.

B. Gravity Piping and Joints, Fittings, and Connections
1. Nonreinforced Concrete Pipe
   a. S.S.P.W.C. Section 207-1.
   b. S.S.P.W.C. Table 207-1.4 (B).
2. Reinforced Concrete Pipe (RCP)
   a. S.S.P.W.C. Section 207-2.
3. Lined Reinforced Concrete Pipe
   a. S.S.P.W.C. Section 207-3.
4. Vitrified Clay Pipe (VCP)
   a. S.S.P.W.C. Section 207-8.
5. Cast Iron Soil Pipe
   a. S.S.P.W.C. Section 207-9.
6. Corrugated Steel Pipe and Pipe Arches
   a. S.S.P.W.C. Section 207-11.
7. Structural Steel Plate and Arches
   a. S.S.P.W.C. Section 207-12.
8. Corrugated Aluminum Pipe and Pipe Arches
   a. S.S.P.W.C. Section 207-13.
9. Structural Aluminum Plate Pipe and Arches
   a. S.S.P.W.C. Section 207-14.
10. ABS Solid Wall Pipe
   a. S.S.P.W.C. Section 207-15.
11. ABS or PVC Composite Pipe
   a. S.S.P.W.C. Section 207-16.
12. PVC Gravity Pipe
   a. S.S.P.W.C. Section 207-17.
13. Annular High-Density Polyethylene Pipe with Smooth Interior, Corrugated Exterior, with Bell and Spigot Joints (Type S)
   a. S.S.P.W.C. Section 207-18.
14. Polyethylene (PE) Solid Wall Gravity Pipe
   a. S.S.P.W.C. Section 207-19.
15. Fiberglass Reinforced Polymer Mortar (FRPM) Pipe.
   a. S.S.P.W.C. Section 207-20.

C. Pipe Joint Types and Materials
1. General
   a. The type of material shall be designated on the Plans.
2. Joints for Clay Pipe
   a. S.S.P.W.C. Section 208-2.
3. Gaskets for Concrete Pipe
   a. S.S.P.W.C. Section 208-3.
4. Gaskets for Thermoplastic Pipe
   a. S.S.P.W.C. Section 208-4.
5. Type 'Z' Joint
   a. S.S.P.W.C. Section 208-5.
6. Pipe to Manhole Flexible Couplings
   a. S.S.P.W.C. Section 208-6.

D. Pipeline Identification
1. S.S.P.W.C., Table 209-7.2.

E. Precast Concrete Sanitary Sewerage Items
  1. General
    a. S.S.P.W.C. Section 216.
    b. Size, shape, and section as indicated on drawings.
  2. Manholes
    a. ASTM C-478, AASHTO M199
    b. Metal Ring and Cover
      1. All materials shall conform to ASTM A48-30, S.S.P.W.C., Section 206-3.
      2. Clear opening width as indicated on drawings.
      3. Frame and cover bearing surfaces machined to close quite fit.
      4. AASHITO HS-20 Wheel Loading
      5. Cover Markings: "SANITARY SEWER"
    c. Barrel Construction
      1. I.D. shaft diameter as indicated on drawings.
      2. Concentric Cone Top
      3. Reinforced precast concrete pipe sections, lipped male/female dry joints
      4. Cast step rungs
    d. Base Shell
      1. AASHITO HS-20 Wheel Loading.
      2. I.D. shaft diameter to match barrel I.D.
      3. Reinforced precast concrete pipe sections, lipped male/female dry joints
      4. Sleeved to receive sewer pipe sections.
      5. Cast step rungs

G. Metal Covers, Grates, Frames, and Accessories
  1. General
    a. S.S.P.W.C. Section 206-3.
    b. Vandal-proof design
    c. ADA compliant
  2. Cleanouts
    a. Frame and Lid
      1. All materials shall conform to ASTM A-48, Class 30B
      2. Nominal opening width as indicated on drawings.
      3. Frame and cover bearing surfaces machined to close quite fit.
      4. AASHITO HS-20 Wheel Loading
      5. Lid to have cast 1-inch tall raised letters reading 'SEWER'.

2.04 MANUFACTURED UNITS
2.05 EQUIPMENT
2.06 COMPONENTS
2.07 ACCESSORIES
2.08 MIXES
2.09 FABRICATION
2.10 FINISHES
2.11 SOURCE QUALITY CONTROL

PART 3 EXECUTION

3.01 INSTALLERS

3.02 EXAMINATION

A. Site Verification of Conditions

1. Verify that trenches are cut and ready to receive work, and excavations, dimensions, and elevations are as indicated.
2. Beginning of installation means acceptance of existing conditions.

3.03 PREPARATION

A. Protection

B. Surface Preparation

1. Trench Excavation
   a. In accordance with S.S.P.W.C., Section 306-3.
2. Correct over excavation with fill material or sand.
3. Remove large stones or other hard matter which could damage drainage tile or impede consistent backfilling or compaction.

3.04 ERECTION

3.05 INSTALLATION

A. Gravity Pipes and Fittings

1. General
   a. Install in accordance with S.S.P.W.C., Section 306-7.
   b. Maintain separation of products conveying potable water and products conveying fluids other than potable water.
   c. Route pipe in as straight lines as possible, in uniform alignment, and slope to the point of connection as indicated.
   d. Install pipe to allow for expansion and contraction without stressing pipe joints.
   e. Join pipes and fittings as recommended by the manufacturer.
   f. Pipe slope shall not be less than 1/4-inch per foot unless pipe invert elevations are indicated on drawings. Where invert elevations are indicated, install pipe at an uniform slope between inverts.
2. Nonreinforced Concrete Pipe
   a. Install in accordance with S.S.P.W.C. Section 306-7.2.
   b. Install in accordance with S.S.P.W.C. Table 306-7.1.
3. Reinforced Concrete Pipe (RCP)
   a. Install in accordance with S.S.P.W.C. Section 306-7.3.
   b. Install in accordance with S.S.P.W.C. Table 306-7.1.
4. Vitrified Clay Pipe (VCP)
   a. Install in accordance with S.S.P.W.C. Section 306-7.4.
   b. Install in accordance with S.S.P.W.C. Table 306-7.1.
5. Cast Iron Soil Pipe
   a. Install in accordance with S.S.P.W.C. Section 306-7.5.
   b. Install in accordance with S.S.P.W.C. Table 306-7.1.
6. Corrugated Metal Pipe (CMP)
   a. Install in accordance with S.S.P.W.C. Section 306-7.6.
   b. Install in accordance with S.S.P.W.C. Table 306-7.1.
7. Plastic Sewer and Drainage Pipe
   a. Install in accordance with S.S.P.W.C. Section 306-7.7.
   b. Install in accordance with S.S.P.W.C. Table 306-7.1.

B. Pipeline Identification

1. Install in accordance with S.S.P.W.C., Table 209-7.2.

C. Precast Concrete Sanitary Sewerage Items
   1. Install in accordance with S.S.P.W.C., Sections 302-5.8 and 303-1.
   2. Install in accordance with manufacturer's instructions.

D. Cleanouts
   a. Provide cleanout at the upper terminal for each sanitary pipeline, at intervals not exceeding 100 feet in straight run and any fraction thereof and for each aggregate horizontal change in direction exceeding 135 degrees.
   b. Install required cleanouts before back filling of horizontal pipelines.
   c. In concrete-paved areas, install flush with finish grade.

3.06 APPLICATION
3.07 CONSTRUCTION
3.08 REPAIR/RESTORATION
3.09 RE-INSTALLATION
3.10 FIELD QUALITY CONTROL

A. Site Tests, Inspection
   1. Project Inspector of Record shall be present for all testing and inspections.
   2. Gravity Pipeline Testing
      a. Test and inspect in accordance with S.S.P.W.C. Section 306-7.8 et. seq.
   3. Closed Circuit Television (CCTV) Inspection shall be conducted in accordance with the National Association of Sewer Service Companies (NASSCO) Pipeline Assessment Certification Program (PACP).

B. Manufacturers' Field Services

3.11 ADJUSTING
3.12 CLEANING
3.13 DEMONSTRATION
3.14 PROTECTION
3.15 SCHEDULES

END OF SECTION

SECTION 33 40 00
STORM DRAINAGE UTILITIES

PART 1 GENERAL

1.01 SUMMARY
- A. Section Includes
  1. Gravity Piping and Joints, Fittings, and Connections
  2. Pipe Joint Types and Materials
  3. Pipeline Identification
  4. Precast Concrete Storm Drainage Items
  5. Metal Covers, Grates, Frames, and Accessories
  6. Stone for Riprap
  7. Filter Geotextiles
  8. Gravel Backfill
- B. Products Supplied But Not Installed Under This Section
- C. Products Installed But Not Supplied Under This Section
- D. Related Sections
  1. 31 23 26 Base Course
  2. 32 12 16 Asphalt Paving
  2. 32 13 13 Concrete Paving
- E. Allowances
- F. Unit Prices
- G. Measurement Procedures
- H. Payment Procedures
- I. Alternates

1.02 REFERENCES
- A. The "Greenbook" Standard Specifications for Public Works Construction, Current Edition (S.S.P.W.C.)
- B. ASTM C478 – Standard Specification for Circular Precast Reinforced Concrete Manhole Section
- C. ASTM A48 – Standard Specification for Gray Iron Castings
- D. AASHTO M199 – Standard Specification for Precast Reinforced Concrete Manhole Sections

1.03 DEFINITIONS
- A. AASHITO: American Association of State Highway and Transportation Officials

1.04 SYSTEM DESCRIPTIONS
- A. Design Requirements, Performance Requirements
  1. All specified construction materials and construction methods shall comply with the "Greenbook", Standard Specifications for Public Works Construction, current edition.

1.05 SUBMITTALS
- A. General
- B. Product Data
  1. Submit manufacturer's product data for products specified.
     a. Include technical data for pipe, accessories, gaskets, joints, and couplings.
- C. Shop Drawings

D. Samples
E. Quality Assurance/Control Submittals
F. Closeout Submittals
    1. As-Built Drawings
        a. Submit as-built drawings indicating location of pipe runs, connections, invert elevations, manholes, and cleanouts.
        b. Identify and describe unexpected variations to subsoil conditions or discovery of uncharted utilities.
    2. Closed Circuit Television (CCTV) Inspection
        1. Submit video archives to owner.

1.06 QUALITY ASSURANCE
A. Qualifications
    1. Provide all manholes from the same manufacturer.
    2. Provide all cleanouts from the same manufacturer.
B. Regulatory Requirements
C. Certifications
D. Field Samples
E. Mock-ups
F. Pre-installation Meetings

1.07 DELIVERY, STORAGE, AND HANDLING
A. Packing, Shipping, Handling, and Unloading
    1. In accordance with S.S.P.W.C., Section 306.
B. Acceptance at Site
    1. In accordance with S.S.P.W.C., Section 306.
C. Storage and Protection
    1. In accordance with S.S.P.W.C., Section 306.
D. Waste Management and Disposal

1.08 PROJECT CONDITIONS
1.09 SEQUENCING
1.10 SCHEDULING
1.11 WARRANTY
1.12 SYSTEM STARTUP
1.13 OWNER'S INSTRUCTIONS
1.14 COMMISSIONING
1.15 MAINTENANCE

PART 2 PRODUCTS

2.01 MANUFACTURERS
A. Precast Concrete Storm Drainage Items
    1. Jenson Precast, 14221 San Bernardino Ave., Fontana, CA 92335, or equal.
    2. Oldcastle Precast, Inc., 10650 Hemlock Ave., Fontana, CA 92337
B. Metal Covers, Grates, Frames, and Accessories
    1. South Bay Foundry, 9444 Abraham Way, Santee, CA 92071, or equal.
    2. Alhambra Foundry Company, 1147 Meridian Ave., Alhambra, CA 91802

2.02 EXISTING PRODUCTS
2.03 MATERIALS

A. General
   1. Provide piping materials and factory-fabricated piping products of sizes, types, pressure ratings, and capacities as indicated on drawings.
   2. Provide sizes and types matching piping and equipment connections; provide fittings of materials which match pipe materials used in potable water systems.
   3. Where more than one type of materials or product is indicated, selection is Installer's option.

B. Gravity Piping and Joints, Fittings, and Connections
   1. Nonreinforced Concrete Pipe
      a. S.S.P.W.C., Section 207-1.
      b. S.S.P.W.C., Table 207-1.4 (B).
   2. Reinforced Concrete Pipe (RCP)
      a. S.S.P.W.C., Section 207-2.
   3. Lined Reinforced Concrete Pipe
      a. S.S.P.W.C., Section 207-3.
   4. Vitrified Clay Pipe (VCP)
      a. S.S.P.W.C., Section 207-8.
   5. Cast Iron Soil Pipe
      a. S.S.P.W.C., Section 207-9.
   6. Corrugated Steel Pipe and Pipe Arches
      a. S.S.P.W.C., Section 207-11.
   7. Structural Steel Plate and Arches
      a. S.S.P.W.C., Section 207-12.
   8. Corrugated Aluminum Pipe and Pipe Arches
      a. S.S.P.W.C., Section 207-13.
   9. Structural Aluminum Plate Pipe and Arches
      a. S.S.P.W.C., Section 207-14.
   10. ABS Solid Wall Pipe
      a. S.S.P.W.C., Section 207-15.
   11. ABS or PVC Composite Pipe
      a. S.S.P.W.C., Section 207-16.
   12. PVC Gravity Pipe
      a. S.S.P.W.C., Section 207-17.
   13. Annular High-Density Polyethylene Pipe with Smooth Interior, Corrugated Exterior, with Bell and Spigot Joints (Type S)
      a. S.S.P.W.C., Section 207-18.
   14. Polyethylene (PE) Solid Wall Gravity Pipe
      a. S.S.P.W.C., Section 207-19.
   15. Fiberglass Reinforced Polymer Mortar (FRPM) Pipe.
      a. S.S.P.W.C., Section 207-20.

C. Pipe Joint Types and Materials
   1. General
      a. The type of material shall be designated on the Plans.
   2. Joints for Clay Pipe
      a. S.S.P.W.C., Section 208-2.
   3. Gaskets for Concrete Pipe
      a. S.S.P.W.C., Section 208-3.
   4. Gaskets for Thermoplastic Pipe
      a. S.S.P.W.C., Section 208-4.
   5. Type 'Z' Joint
      a. S.S.P.W.C., Section 208-5.

6. Pipe to Manhole Flexible Couplings
    a. S.S.P.W.C., Section 208-6.

D. Pipeline Identification
1. S.S.P.W.C., Table 209-7.2.

E. Precast Concrete Storm Drainage Items
1. General
    a. S.S.P.W.C. Section 216.
    b. Size, shape, and section as indicated on drawings.
2. Manholes
    a. ASTM C-478, AASHTO M199
    b. Metal Ring and Cover
        1. All materials shall conform to ASTM A48-30, S.S.P.W.C., Section 206-3.
        2. Clear opening width as indicated on drawings.
        3. Frame and cover bearing surfaces machined to close quite fit.
        4. AASHITO HS-20 Wheel Loading
        5. Cover Markings: “STORM DRAIN”
    c. Barrel Construction
        1. I.D. shaft diameter as indicated on drawings.
        2. Concentric Cone Top
        3. Reinforced precast concrete pipe sections, lipped male/female dry joints
        4. Cast step rungs
    d. Base Shell
        1. AASHITO HS-20 Wheel Loading.
        2. I.D. shaft diameter to match barrel I.D.
        3. Reinforced precast concrete pipe sections, lipped male/female dry joints
        4. Sleeved to receive sewer pipe sections.
        5. Cast step rungs

G. Metal Covers, Grates, Frames, and Accessories
1. General
    a. S.S.P.W.C. Section 206-3.
    b. Vandal-proof design
    c. ADA compliant
2. Cleanouts
    a. Frame and Lid
        1. All materials shall conform to ASTM A-48, Class 30B
        2. Nominal opening width as indicated on drawings.
        3. Frame and cover bearing surfaces machined to close quite fit.
        4. AASHITO HS-20 Wheel Loading
        5. Lid to have cast 1-inch tall raised letters reading ‘STORM DRAIN’.

H. Stone for Riprap
1. S.S.P.W.C. Section 200-1.6.

I. Filter Geotextiles
1. S.S.P.W.C. Section 213-5.
2. Nonwoven, Type 180N

J. Gravel Backfill
1. S.S.P.W.C. Section 200-1, 200-1.3.
2. Minimum sieve size: 1/2-inch

2.04 MANUFACTURED UNITS
2.05 EQUIPMENT
2.06 COMPONENTS
2.07 ACCESSORIES
2.08 MIXES
2.09 FABRICATION
2.10 FINISHES
2.11 SOURCE QUALITY CONTROL

PART 3 EXECUTION

3.01 INSTALLERS
3.02 EXAMINATION
- A. Site Verification of Conditions
  - 1. Verify that trenches are cut and ready to receive work, and excavations, dimensions, and elevations are as indicated.
  - 2. Beginning of installation means acceptance of existing conditions.

3.03 PREPARATION
- A. Protection
- B. Surface Preparation
  - 1. Trench Excavation
    - a. In accordance with S.S.P.W.C., Section 306-3.
  - 2. Correct over excavation with fill material or sand.
  - 3. Remove large stones or other hard matter which could damage drainage tile or impede consistent backfilling or compaction.

3.04 ERECTION
3.05 INSTALLATION
- A. Gravity Pipes and Fittings
  - 1. General
    - a. Install in accordance with S.S.P.W.C., Section 306-7.
    - b. Maintain separation of products conveying potable water and products conveying fluids other than potable water.
    - c. Route pipe in as straight lines as possible, in uniform alignment, and slope to the point of connection as indicated.
    - d. Install pipe to allow for expansion and contraction without stressing pipe joints.
    - e. Join pipes and fittings as recommended by the manufacturer.
    - f. Pipe slope shall not be less than 1/4-inch per foot unless pipe invert elevations are indicated on drawings. Where invert elevations are indicated, install pipe at a uniform slope between inverts.
  - 2. Nonreinforced Concrete Pipe
    - a. Install in accordance with S.S.P.W.C., Section 306-7.2.
    - b. Install in accordance with S.S.P.W.C., Table 306-7.1.
  - 3. Reinforced Concrete Pipe (RCP)
    - a. Install in accordance with S.S.P.W.C., Section 306-7.3.
    - b. Install in accordance with S.S.P.W.C., Table 306-7.1.
  - 4. Vitrified Clay Pipe (VCP)

a. Install in accordance with S.S.P.W.C., Section 306-7.4.
b. Install in accordance with S.S.P.W.C., Table 306-7.1.

5. Cast Iron Soil Pipe
   a. Install in accordance with S.S.P.W.C., Section 306-7.5.
   b. Install in accordance with S.S.P.W.C., Table 306-7.1.
6. Corrugated Metal Pipe (CMP)
   a. Install in accordance with S.S.P.W.C., Section 306-7.6.
   b. Install in accordance with S.S.P.W.C., Table 306-7.1.
7. Plastic Sewer and Drainage Pipe
   a. Install in accordance with S.S.P.W.C., Section 306-7.7.
   b. Install in accordance with S.S.P.W.C., Table 306-7.1.

B. Pipeline Identification
   1. Install in accordance with S.S.P.W.C., Table 209-7.2.

C. Precast Concrete Storm Drainage Items
   1. Install in accordance with S.S.P.W.C., Sections 302-5.8 and 303-1.
   2. Install in accordance with manufacturer's instructions.

D. Cleanouts
   1. Install required cleanouts before back filling of horizontal pipelines.
   2. In concrete-paved areas, install flush with finish grade.

E. Stonework for Erosion Control
   1. Install in accordance with S.S.P.W.C., Section 300-11.

F. Filter Geotextiles
   1. For Drainage
      a. Install in accordance with S.S.P.W.C., Section 300-8.
   2. For Erosion Control
      a. Install in accordance with S.S.P.W.C., Section 300-9.
   3. For Separation
      a. Install in accordance with S.S.P.W.C., Section 300-10.

G. Gravel Backfill
   a. Install in accordance with S.S.P.W.C., Section 300-3.5.2.

3.06 APPLICATION

3.07 CONSTRUCTION

3.08 REPAIR/RESTORATION

3.09 RE-INSTALLATION

3.10 FIELD QUALITY CONTROL

A. Site Tests, Inspection
   1. Project Inspector of Record shall be present for all testing and inspections.
   2. Gravity Pipeline Testing
      a. Test and inspect in accordance with S.S.P.W.C., Section 306-7.8 et. seq.
   3. Closed Circuit Television (CCTV) Inspection shall be conducted in accordance with the National Association of Sewer Service Companies (NASSCO) Pipeline Assessment Certification Program (PACP).

B. Manufacturers' Field Services

3.11 ADJUSTING

3.12 CLEANING

3.13 DEMONSTRATION

3.14 PROTECTION

3.15 SCHEDULES

END OF SECTION

HIGHLAND HIGH SCHOOL
50M POOL & AQUATICS CENTER

KERN HIGH SCHOOL DISTRICT

DIVISION OF THE STATE ARCHITECT (DSA) PROJECT NO.:03-122664
OFFICE OF PUBLIC SCHOOL CONSTRUCTION (OPSC) PROJECT TRACKING NO: 63529-403
PJHM PROJECT NO: KHSD 2201

IDENTIFICATION STAMP
DIV. OF THE STATE ARCHITECT
APP: 03-122664 INC:
REVIEWED FOR
SS ☑ FLS ☑ ACS ☑
DATE: 05/12/2023

pjhm architects

LICENSED ARCHITECT
THOMAS W. FRISK
NO. C25585
REN. 02/25
STATE OF CALIFORNIA

pjhm.com • Web: • LA Phone: 213.278.0172 • LA Office: 837 Traction Avenue, #410, Los Angeles, CA 90013 • SD Phone: 760.730.5527 • SD Office: 804 Pier View Way #103, Oceanside, CA 92054 • OC Phone: 949.496.6191 • OC Office: 24461 Ridge Route Drive #100, Laguna Hills, CA 92653

PROJECT NAME

KERN HIGH SCHOOL DISTRICT
5801 SUNDALE AVENUE BAKERSFIELD, CA 93309
(T)661.827.3100, jenny_hannah@kernhigh.org

SUPERINTENDENT
BRYON SCHAEFER, Ed. D.

BOARD OF TRUSTEES
J. BRYAN BATEY, PRESIDENT
DEREK TISINGER, VICE PRESIDENT
KATHY SCRIVNER, CLERK
STEVEN RODRIGUE, MEMBER
DAVID MANRIQUEZ, CLERK PRO TEM
YOHANNA GUZMAN VARGAS, STUDENT BOARD MEMBER

OWNER/BOARD OF TRUSTEES

GEOTECHNICAL ENGINEERING
SOILS ENGINEERING, INC.
4400 YEAGER WAY BAKERSFIELD, CA 93313
(T) 661.831.5100, onman@soilsengineering.com

GEOTECHNICAL INVESTIGATION: SEI FILE 22-18353, AUGUST 5, 2022
GEO-HAZARD REPORT: SEI FILE22-18353, OCTOBER 10, 2022
CGS APPLICATION NO.: 03 - CGS5552, OCTOBER 24, 2022

OWNERS CONSULTANTS

PJHM ARCHITECTS, INC.

IN ORANGE COUNTY
24461 RIDGE ROUTE DRIVE #110, LAGUNA HILLS, CA 92653
949.496.6191, tomk@pjhm.com, derek@pjhm.com

IN SAN DIEGO COUNTY
804 PIER VIEW WAY #103, OCEANSIDE, CA 92054
760.730.5527

IN *LOS ANGELES COUNTY*
837 TRACTION AVENUE #410, LOS ANGELES, CA 90013
949.496.6191

ARCHITECT

AQUATIC DESIGN
AQUATIC DESIGN GROUP
2226 FARADAY AVENUE, CARLSBAD, CA 92008
760.438.8400, gcannon@aquaticdesigngroup.com

CIVIL ENGINEERING
SWANSON ENGINEERING INC.
200 OAK STREET, SUITE 150, BAKERSFIELD, CA 93301
(T) 661.831.4919, bob@swansonengr.com

STRUCTURAL ENGINEERING
VCA ENGINEERS
2151 MICHELSON DRIVE #240, IRVINE, CA 92612
(T) 949.679.0870, young.nam@vcaeng.com

PLUMBING / MECHANICAL ENGINEERING
ENGINEOUS GROUP, INC.
715 N. FAIR OAKS AVENUE, SUITE 201, PASADENA, CA 91103
(T) 626.714.7506, brad@engineousgroup.com

AUTOMATIC FIRE SPRINKLER ENGINEERING
PROTECTION DESIGN & CONSULTING
2851 CAMINO DEL RIO SOUTH, SUITE 400, SAN DIEGO, CA 92108
(T) 858.751.2930, brent@protectiondesign.com

ELECTRICAL/FIRE ALARM ENGINEERING
TK1SC COLLABORATIVE
11870 PIERCE STREET, SUITE 160, RIVERSIDE, CA 92505
951.299.4160, jbrandts@tk1sc.com

LANDSCAPE DESIGN
BRANDON PETRUINO & ASSOCIATES, INC.
15699 CHERRY LEAF LANE, FONTANA, CA 92336
424.235.8940, brandon@bpalas.com

ARCHITECTS CONSULTANTS

GENERAL NOTES

1. ALL WORK SHOULD CONFORM TO 2019 TITLE 24, CALIFORNIA CODE OF REGULATIONS (C.C.R.)
2. CHANGES TO THE APPROVED DRAWINGS AND SPECIFICATIONS SHALL BE MADE BY ADDENDA OR CONSTRUCTION CHANGE DOCUMENT (CCD) APPROVED BY DSA, AS REQUIRED BY SECTION 4-338, PART 1, TITLE 24, CCR.
3. A "DSA CERTIFIED" PROJECT INSPECTOR EMPLOYED BY THE DISTRICT (OWNER) AND APPROVED BY DSA SHALL PROVIDE CONTINUOUS INSPECTION OF THE WORK. THE DUTIES OF THE INSPECTOR ARE DEFINED IN SECTION 4-342, PART 1, TITLE 24, CCR. A DSA-CERTIFIED CLASS 1 PROJECT INSPECTOR IS REQUIRED FOR THE PROJECT
4. A DSA ACCEPTED TESTING LABORATORY DIRECTLY EMPLOYED BY THE DISTRICT (OWNER) SHALL CONDUCT ALL THE REQUIRED TESTS AND INSPECTIONS FOR THE PROJECT. TESTING LAB MUST HAVE DSA LABORATORY EVALUATION AND ACCEPTANCE PROGRAM ACCEPTANCE.
5. GRADING PLANS, DRAINAGE IMPROVEMENTS, ROAD AND ACCESS REQUIREMENTS AND ENVIRONMENTAL HEALTH CONSIDERATIONS SHALL COMPLY WITH ALL LOCAL ORDINANCES.
6. THE ARCHITECT OR ENGINEER MAY FIND DEFECTS IN THE WORK, AND IF THEY DO, THEY WILL NOTIFY THE CONTRACTOR SO THE ERROR MAY BE CORRECTED. UNDER NO CIRCUMSTANCES IS IT EVER THE INTENT FOR THE ARCHITECT OR ENGINEER TO BECOME A GUARANTOR OF THE CONTRACTOR'S PERFORMANCE BY THESE ACTIVITIES. THE FACT THAT A CONTRACTOR'S ERROR GOES UNDETECTED DURING THE VISIT TO THE SITE DOES NOT MAKE THE ARCHITECT OR ENGINEER NEGLIGENT: THE CONTRACTOR IS NEVER RELIEVED OF THE RESPONSIBILITY FOR THE DISCOVERY OF HIS OWN ERRORS AND THE CORRECTION OF THEM, NOR OF THE RESPONSIBILITY OF PROPERLY PERFORMING THE WORK.
7. THE ARCHITECT OR ENGINEER WILL MAKE VISITS TO THE JOB SITE TO OBSERVE THE PROGRESS OF THE WORK AND TO OBSERVE WHETHER OR NOT IT IS, IN GENERAL, BEING PERFORMED IN ACCORDANCE WITH THEIR PLANS AND SPECIFICATIONS. THIS DOES NOT IN ANY WAY MEAN THAT THE ARCHITECT OR ENGINEER IS A GUARANTOR OF THE CONTRACTOR'S WORK: RESPONSIBILITY FOR SAFETY IN, ON OR ABOUT THE JOB SITE: IN CONTROL OF THE SAFETY OR ADEQUACY OF ANY EQUIPMENT, BUILDING COMPONENT, SCAFFOLDING,FORMS, OR OTHER WORK AIDS: OR SUPERINTENDING THE WORK.
8. FOR ALL WALL MOUNTED AND SEMI-RECESSED MOUNTED EQUIPMENT, ACCESSORIES CABINETS, HANDRAILS, MARKER BOARDS, MECHANICAL EQUIPMENT, ELECTRICAL EQUIPMENT AND ETC. PROVIDE AND INSTALL BACKING IN ACCORDANCE TO STRUCTURAL DETAILS.
9. UNLESS OTHERWISE NOTED, ALL INTERIOR WALLS SHOWN ON THE FLOOR PLAN ARE TO EXTEND TO THE UNDERSIDE OF THE ROOF SHEATHING WITH ONE LAYER OF 5/8" THICK, TYPE "X" GYPSUM BOARD ON EACH SIDE OF STUD FACE. ALL STUD WALLS TO CONTAIN SOUND INSULATION BATTS, FULL HEIGHT.
10. DO NOT SCALE DRAWINGS. WORK TO THE DIMENSIONS INDICATED ON THE DRAWINGS. CONTRACTOR SHALL VERIFY THE DIMENSIONS AT THE JOB SITE AND NOTIFY THE ARCHITECT OF ANY DISCREPANCIES FOR PROMPT CLARIFICATION.
11. THE EXISTENCE AND LOCATION OF EXISTING UNDERGROUND UTILITIES OR STRUCTURES INDICATED OR NOT ON THE DRAWING ARE OBTAINED BY SEARCH OF AVAILABLE RECORDS. IT IS THE CONTRACTOR'S RESPONSIBILITY TO VERIFY EXACT LOCATIONS OF THE UTILITIES WITH SCHOOL DISTRICT MAINTENANCE AND OPERATION PERSONNEL. THE CONTRACTOR IS REQUIRED TO TAKE PRECAUTIONARY MEASURES TO PROTECT THE UTILITIES AND OTHER STRUCTURES. ANY DAMAGE SHALL BE PROMPTLY RESTORED TO THE SCHOOL DISTRICT'S SATISFACTION.
12. PROVIDE CONSTRUCTION BARRICADES AS REQUIRED TO PROTECT PUBLIC'S HEALTH AND SAFETY INCLUDING WORK UNDER CONSTRUCTION TO THE REQUIREMENTS OF THE SCHOOL DISTRICT. COVER OPEN TRENCHES WITH SOLID MATERIAL.
13. THE CONTRACTOR SHALL PROTECT ADJACENT PROPERTY AND STRUCTURES. ANY DAMAGE SHALL BE PROMPTLY RESTORED TO THE SATISFACTION OF THE OWNER/ARCHITECT, AT CONTRACTOR'S EXPENSE.
14. BIDDERS ARE REQUIRED TO LOOK AT ALL **DRAWINGS** AND **SPECIFICATIONS**, NOT JUST THOSE SHEETS OR SECTIONS RESPECTIVE OF THEIR TRADE.
15. UNLESS SPECIFIED ON STRUCTURAL OR ARCHITECTURAL DRAWINGS, ANY ALTERATIONS OR MODIFICATIONS TO A STRUCTURAL ELEMENT BY CUTTING, DRILLING, BORING, BRACING, WELDING, ETC. SHALL HAVE WRITTEN APPROVAL BY STRUCTURAL ENGINEER OF RECORD AND APPROVAL OF DSA PRIOR TO START OF WORK.
16. ALL DETAILS CONTAINED IN THESE CONSTRUCTION DOCUMENTS ARE PART OF THE CONSTRUCTION SCOPE REGARDLESS OF THEM BEING REFERENCED IN THE SET.
17. FIRE SAFETY DURING DEMOLITION AND CONSTRUCTION SHALL COMPLY WITH CBC CHAPTER 33 AND CFC CHAPTER 33.

GENERAL ALTERATION NOTES

1. THE INTENT OF THESE DRAWINGS AND SPECIFICATIONS IS THAT THE WORK OF THE ALTERATION, REHABILITATION OR RECONSTRUCTION IS TO BE IN ACCORDANCE WITH TITLE 24, CCR. SHOULD ANY EXISTING CONDITIONS SUCH AS DETERIORATION OR NON-COMPLYING CONSTRUCTION BE DISCOVERED WHICH IS NOT COVERED BY THE CONTRACT DOCUMENTS WHEREIN THE FINISHED WORK WILL NOT COMPLY WITH TITLE 24, CCR, A CONSTRUCTION CHANGE DOCUMENT (CCD), OR A SEPARATE SET OF PLANS AND SPECIFICATIONS, DETAILING AND SPECIFYING THE REQUIRED WORK SHALL BE SUBMITTED TO AND APPROVED BY DSA BEFORE PROCEEDING WITH THE WORK. (SECTION 4-317(C), PART 1, TITLE 24, CCR)

APPLICABLE CODES AND STANDARDS

2022 CALIFORNIA ADMINISTRATIVE CODE (CAC),
PART 1, TITLE 24 CALIFORNIA CODE OF REGULATIONS

2019 CALIFORNIA BUILDING CODE (CBC),
PART 2, TITLE 24 CALIFORNIA CODE OF REGULATIONS

2019 CALIFORNIA ELECTRICAL CODE (CEC),
PART 3, TITLE 24 CALIFORNIA CODE OF REGULATIONS

2019 CALIFORNIA MECHANICAL CODE (CMC),
PART 4, TITLE 24 CALIFORNIA CODE OF REGULATIONS

2019 CALIFORNIA PLUMBING CODE (CPC),
PART 5, TITLE 24 CALIFORNIA CODE OF REGULATIONS

2019 CALIFORNIA ENERGY CODE
PART 6, TITLE 24 CALIFORNIA CODE OF REGULATIONS

2019 CALIFORNIA FIRE CODE (CFC)
PART 9, TITLE 24 CALIFORNIA CODE OF REGULATIONS

2019 CALIFORNIA EXISTING BUILDING CODE (CEBC)
PART 10, TITLE 24 CALIFORNIA CODE OF REGULATIONS

2019 CALIFORNIA GREEN BUILDING STANDARDS CODE (CALGreen)
PART 11, TITLE 24 CALIFORNIA CODE OF REGULATIONS

2019 CALIFORNIA REFERENCED STANDARDS CODE
PART 12, TITLE 24 CALIFORNIA CODE OF REGULATIONS

TITLE 19 CALIFORNIA CODE OF REGULATIONS,
PUBLIC SAFETY STATE FIRE MARCHAL REGULATIONS

APPLICABLE STANDARDS

FOR A LIST OF APPLICABLE STANDARDS, INCLUDING CALIFORNIA AMEDMENTS TO THE NFPA STANDARDS, REFER TO CALIFORNIA BUILDING CODE CHAPTER 35 AND CALIFORNIA FIRE CODE CHAPTER 80

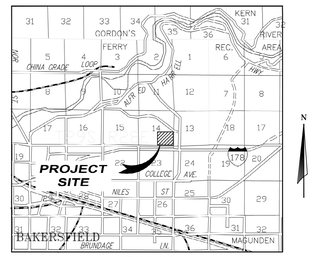

VICINITY MAP
N.T.S.

2900 ROYAL SCOTS WAY, BAKERSFIELD, CA 93306

VICINITY MAP

BRIEF PROJECT SCOPE

THIS CONSTRUCTION DOCUMENT PACKAGE INCLUDES, BUT IS NOT LIMITED TO THE FOLLOWING SCOPE:

1. DEMOLITION OF:
   - (E) SITE WORK
2. ALTERATION OF:
   - (E) PARKING LOT 'C' - ACCESSIBLE PARKING UPGRADES, FIRE LANE
3. CONSTRUCTION OF:
   - (N) 50M OUTDOOR POOL, POOL DECK
   - (N) BUILDING 'A' - POOL LOCKER ROOMS, RESTROOMS
   - (N) BUILDING 'B' - POOL CLASSROOM, TIERED SEATING, RESTROOMS
   - (N) BUILDING 'C' - POOL PUMP HOUSE
   - (N) PASSENGER DROP-OFF & LOADING ZONE
   - (N) ILLUMINATED SAFE-DISPERSAL AREA
   - (N) SITE IMPROVEMENTS

HIGHLAND HIGH SCHOOL
50M POOL & AQUATICS CENTER

KERN HIGH SCHOOL DISTRICT

COVER SHEET

CS

4/13/2023 9:06:10 AM

AQUATICS — DP/SP/MR

1/8" = 1'-0"

DP.1	SWIMMING POOL DECK PLAN
SP.1	SWIMMING POOL LAYOUT PLAN (SWIMMING)
SP.2	SWIMMING POOL LAYOUT PLAN (WATERPOLO)
SP.3	SWIMMING POOL PIPING PLAN
SP.4	POOL UNDERWATER LIGHT / TIMING SYSTEM PLAN
SP.5	SWIMMING POOL SECTIONS
SP.6	DETAILS
SP.7	DETAILS
SP.8	DETAILS
SP.9	DETAILS
SP.10	DETAILS
SP.11	DETAILS
SP.12	DETAILS
MR.1	MECHANICAL ROOM LAYOUT PLAN
MR.2	MECHANICAL ROOM SECTIONS
MR.3	DETAILS
MR.4	DETAILS
MR.5	DETAILS
MR.6	DETAILS
MR.7	DETAILS
MR.8	DETAILS
MR.9	DETAILS

MUSCO LIGHTING — MT/MS/MD

GRAND TOTAL : 234

1/8" = 1'-0"

MT1	NOTES, FOUNDTION DETAIL
MS1	POLE DETAIL
MD1	ATTACHMENT DETAILS
MD2	ATTACHMENT DETAILS
MD3	ATTACHMENT DETAILS

FIRE PROTECTION — FP

1/8" = 1'-0"

FP-1.0	GENERAL NOTES
FP-1.1	FIRE UNDERGROUND SITE PLAN
FP-1.2	FIRE UNDERGROUND DETAILS
FP-1.3	FIRE UNDERGROUND DETAILS
FP-2-0	FIRE SPRINKLER PIPING PLAN - COMPOSITE
FP-2-1	(N) BUILDING B - FIRE SPRINKLER PIPING PLAN
FP-2-2	(N) BUILDING C - FIRE SPRINKLER PIPING PLAN
FP-3-0	FIRE SPRINKLER RCP PLAN - COMPOSITE
FP-3-1	(N) BUILDING B - FIRE SPRINKLER RCP PLAN
FP-3-2	(N) - BUILDING C - FIRE SPRINKLER RCP PLAN
FP-4-0	DETAILS
FP-4-1	DETAILS
FP-4-2	DETAILS
FP-4-3	SECTIONS

ELECTRICAL — E

1/8" = 1'-0"

E-0.0	SYMBOLS LIST
ED-1.0	DEMOLITION SITE PLAN - OVERALL
E-1.0	SITE PLAN - OVERALL
E-1.1	SITE PLAN - ENLARGED
E-3.0	POOL BUILDING - ELECTRICAL PLAN
E-4.0	POOL BUILDING - LIGHTING PLAN
E-5.0	ROOF PLAN
E-6.0	SINGLE LINE DIAGRAM
E-6.1	POWER SYSTEM STUDY AND GROUNDING
E-6.2	PANEL SCHEDULES
E-6.3	INVERTER SCHEDULE
E-7.0	LIGHTING FIXTURE SCHEDULE
E-7.1	DISTRIBUTED LIGHTING CONTROL SPECIFICATIONS
E-7.2	DISTRUBUTED LIGHTING CONTROL SPECIFICATIONS
E-7.3	DISTRIBUTED LIGHTING CONTROL SOO
E-7.4	TITLE 24 - INTERIOR
E-7.5	TITLE 24 - INTERIOR
E-7.6	TITLE 24 - EXTERIOR
E-8.0	DETAILS
E-8.1	SITE EGRESS PHOTOMETRICS
EFA-0.0	FIRE ALARM SYMBOLS LIST
EFA-1.0	FIRE ALARM DETAILS
EFA-2.0	FIRE ALARM RISER DIAGRAM AND CALCULATIONS
EFA-3.0	POOL BUILDING FIRE ALARM
T-1.0	TECHNOLOGY RISER DIAGRAMS
T-3.0	TECHNOLOGY FACEPLATE DETAILS
T-3.1	TECHNOLOGY DETAILS
T-3.2	TECHNOLOGY DETAILS
T-4.0	AV SINGLE LINE AND DETAILS

STRUCTURAL — S

1/8" = 1'-0"

S-0.1	GENERAL NOTES
S-0.2	GENERAL NOTES
S-1.1	TYPICAL DETAILS-REBAR & S.O.G
S-1.2	TYPICAL DETAILS- FOOTING AND EXCAVATION
S-1.3	TYPICAL DETAILS- FOOTING AND EXCAVATION
S-1.	TYPICAL DETAILS - WOOD
S-1.5	TYPICAL DETAILS - WOOD
S-1.6	TYPICAL DETAILS - WOOD MEP SUPPORT
S-1.7	TYPICAL DETAILS-METAL DECK
S-1.8	TYPICAL DETAILS-CMU
S-2.0	OVERALL PLAN
S-2.1	BLDG A - FOUNDATION & ROOF FRAMING PLAN
S-2.2	BLDG B - FOUNDATION & ROOF FRAMING PLAN
S-2.2.1	CANOPY - FOUNDATION & FRAMING PLAN
S-2.3	BLDG C - FOUNDATION & ROOF FRAMING PLAN
S-4.1	FOUNDATION DETAILS
S-4.2	FOUNDATION DETAILS
S-5.1	FRAMING DETAILS
S-5.2	FRAMING DETAILS
S-5.3	FRAMING DETAILS
S-6.1	CMU WALL ELEVATIONS - BLDG A
S-6.2	CMU WALL ELEVATIONS - BLDG B
S-6.3	CMU WALL ELEVATIONS - BLDG C

PLUMBING — P

1/8" = 1'-0"

P-0.0	PLUMBING FRONT SHEET
P-0.1	PLUMBING SCHEDULE & DETAILS
P-0.2	PLUMBING DETAILS
P-0.3	PLUMBING DETAILS
P-2.0	PLUMBING SITE PLAN
P-2.1	PLUMBING FLOOR PLAN - BUILDING A
P-2.2	PLUMBING FLOOR PLAN - BUILDING B
P-2.3	PLUMBING FLOOR PLAN - BUILDING C
P-3.1	PLUMBING ROOF PLAN - BUILDING A
P-3.2	PLUMBING ROOF PLAN - BUILDING B
P-3.3	PLUMBING ROOF PLAN - BUILDING C

MECHANICAL — M

1/8" = 1'-0"

M-0.1	HVAC TITLE 24 - BUILDING A
M-0.2	HVAC TITLE 24 - BUILDING A
M-0.3	HVAC TITLE 24 - BUILDING B
M-0.4	HVAC TITLE 24 - BUILDING B
M-1.1	HVAC EQUIP. SCHEDULE, LEGEND & NOTES
M-1.2	HVAC EQUIP. SCHEDULE, LEGEND & NOTES
M-2.1	HVAC FLOOR PLAN - BUILDING A
M-2.2	HVAC FLOOR PLAN - BUILDING B
M-2.3	HVAC FLOOR PLAN - BUILDING C
M-3.1	HVAC ROOF PLAN - BUILDING A
M-3.2	HVAC ROOF PLAN - BUILDING B
M-3.3	HVAC ROOF PLAN - BUILDING C
M-4.1	HVAC DETAILS
M-4.2	HVAC DETAILS
M-4.3	HVAC DETAILS

ARCHITECTURAL — A

1/8" = 1'-0"

A-0.1	SITE PLAN - LOCAL FIRE AUTHORITY ACCESS
A-0.2	BUILDING ANALYSIS
A-1.0	SITE PLAN
A-1.1	SITE PLAN - ENLARGED
A-1.2	SITE PLAN - ENLARGED
A-1.3	SITE PLAN - ENLARGED
A-1.4	SITE DETAILS - FENCES & GATES
A-1.5	SITE DETAILS - FENCES & GATES
A-1.6	SITE DETAILS - FENCES & GATES
A-1.7	SITE DETAILS - FENCES & GATES
A-1.8	SITE DETAILS - FENCES & GATES
A-1.9	SITE DETAILS - FENCES & GATES
A-1.10	SITE DETAILS - SITE WALLS
A-1.11	SITE DETAILS - SITE WALLS
A-1.12	SITE DETAILS - GUARDS & HANDRAILS
A-1.13	SITE DETAILS - HARDSCAPE
A-1.14	SITE DETAILS - HARDSCAPE
A-1.15	SITE DETAILS - SIGNAGE
A-1.16	SITE DETAILS - MISCELLANEOUS
A-2.0	SLAB PLAN - COMPOSITE
A-2.1	SLAB PLAN
A-2.2	SLAB PLAN
A-2.3	SLAB PLAN
A-2.4	SLAB PLAN DETAILS
A-2.5	SLAB PLAN DETAILS
A-3.0	FLOOR PLAN - COMPOSITE
A-3.1	FLOOR PLAN
A-3.2	FLOOR PLAN
A-3.3	FLOOR PLAN
A-3.4	FLOOR PLAN - ENLARGED
A-3.5	FLOOR PLAN DETAILS
A-4.0	REFLECTED CEILING PLAN - COMPOSITE
A-4.1	REFLECTED CEILING PLAN
A-4.2	REFLECTED CEILING PLAN
A-4.3	REFLECTED CEILING PLAN
A-4.4	REFLECTED CEILING PLAN DETAILS
A-4.5	REFLECTED CEILING PLAN DETAILS
A-4.6	REFLECTED CEILING PLAN DETAILS
A-4.7	REFLECTED CEILING PLAN DETAILS
A-4.8	REFLECTED CEILING PLAN DETAILS
A-4.9	REFLECTED CEILING PLAN DETAILS
A-5.0	ROOF PLAN - COMPOSITE
A-5.1	ROOF PLAN
A-5.2	ROOF PLAN
A-5.3	ROOF PLAN
A-5.4	ROOF PLAN DETAILS
A-5.5	ROOF PLAN DETAILS
A-5.6	ROOF PLAN DETAILS
A-5.7	ROOF PLAN DETAILS
A-5.8	ROOF PLAN DETAILS
A-5.9	ROOF PLAN DETAILS
A-6.0	EXTERIOR ELEVATIONS
A-6.1	EXTERIOR ELEVATIONS
A-6.2	EXTERIOR ELEVATIONS
A-6.3	EXTERIOR ELEVATION DETAILS
A-6.4	EXTERIOR ELEVATION DETAILS
A-6.5	EXTERIOR ELEVATION DETAILS
A-6.6	EXTERIOR ELEVATION DETAILS
A-7.0	BUILDING SECTIONS
A-7.1	BUILDING SECTIONS
A-7.2	BUILDING SECTIONS
A-7.3	BUILDING SECTIONS
A-7.4	BUILDING SECTIONS
A-8.0	WALL SECTIONS
A-8.1	WALL SECTIONS
A-8.2	WALL SECTIONS
A-8.3	WALL SECTIONS
A-8.4	WALL SECTIONS
A-8.5	WALL SECTIONS
A-8.6	WALL SECTIONS
A-8.7	WALL SECTIONS
A-8.8	WALL SECTIONS
A-8.9	WALL SECTIONS
A-8.10	WALL SECTIONS
A-8.11	WALL SECTION DETAILS
A-8.12	WALL SECTION DETAILS
A-8.13	WALL SECTION DETAILS
A-8.14	WALL SECTION DETAILS
A-9.0	INTERIOR ELEVATIONS
A-9.1	INTERIOR ELEVATIONS
A-9.2	INTERIOR ELEVATIONS
A-9.3	INTERIOR ELEVATION DETAILS
A-9.4	INTERIOR ELEVATION DETAILS
A-10.0	OPENING SCHEDULE/TYPES
A-10.1	OPENING DETAILS
A-10.2	OPENING DETAILS
A-10.3	OPENING DETAILS
A-10.4	OPENING DETAILS
A-11.0	FINISH SCHEDULE
A-12.0	TACTILE SIGNAGE DETAILS
A-13.0	COUNTERTOP DETAILS
A-14.0	ACCESSIBILITY DETAILS

CIVIL — C

1/8" = 1'-0"

TO-1	SITE TOPOGRAPHIC PLAN SOUTHWEST
TO-2	SITE TOPOGRAPHIC PLAN NORTH
TO-3	SITE TOPOGRAPHIC PLAN EAST
C-0	SITE DEMOLITION PLAN
C-1	GRADING PLAN - NORTH
C-2	GRADING PLAN - CENTRAL
C-3	GRADING PLAN - SOUTHWEST
C-4	GRADING PLAN - ADDITIONAL VIEWS
C-5	GRADING NOTES & DETAILS
C-6	SITE UTILITY PLAN - NORTH
C-7	SITE UTILITY PLAN - CENTRAL
C-8	SITE UTILITY PLAN - SOUTH
C-9	SITE UTILITY NOTES & DETAILS
C-10	B.M.P. PLAN
C-11	B.M.P. DETAILS
C-12	SITE PAVEMENT PLAN

LANDSCAPE — L

1/8" = 1'-0"

LI.1	LANDSCAPE IRRIGATION PLAN
LID.1	LANDSCAPE IRRIGATION DETAIL SHEET 1
LID.2	LANDSCAPE IRRIGATION DETAIL SHEET 2 - NOTES AND CALCS.
LP.1	LANDSCAPE PLANTING PLAN
LPD.1	LANDSCAPE PLANTING DETAILS

IDENTIFICATION STAMP
DIV. OF THE STATE ARCHITECT
APP: 03-122664 INC:
REVIEWED FOR
SS ☑ FLS ☑ ACS ☑
DATE: 05/12/2023

pjhm architects

LICENSED ARCHITECT
THOMAS W. PHILLIPS
No. C15585
REN. 02/25
STATE OF CALIFORNIA

SD Phone: 760.730.5527 • LA Office: 837 Traction Avenue, #410, Los Angeles, CA 90013 • LA Phone: 213.278.0172 • Web: pjhm.com
OC Office: 24461 Ridge Route Drive #100, Laguna Hills, CA 92653 • OC Phone: 949.496.6191 • SD Office: 804 Pier View Way #103, Oceanside, CA 92054

HIGHLAND HIGH SCHOOL
50M POOL & AQUATICS CENTER

KERN HIGH SCHOOL DISTRICT

SCHEDULE OF DRAWINGS

INDEX

4/13/2023 9:06:11 AM

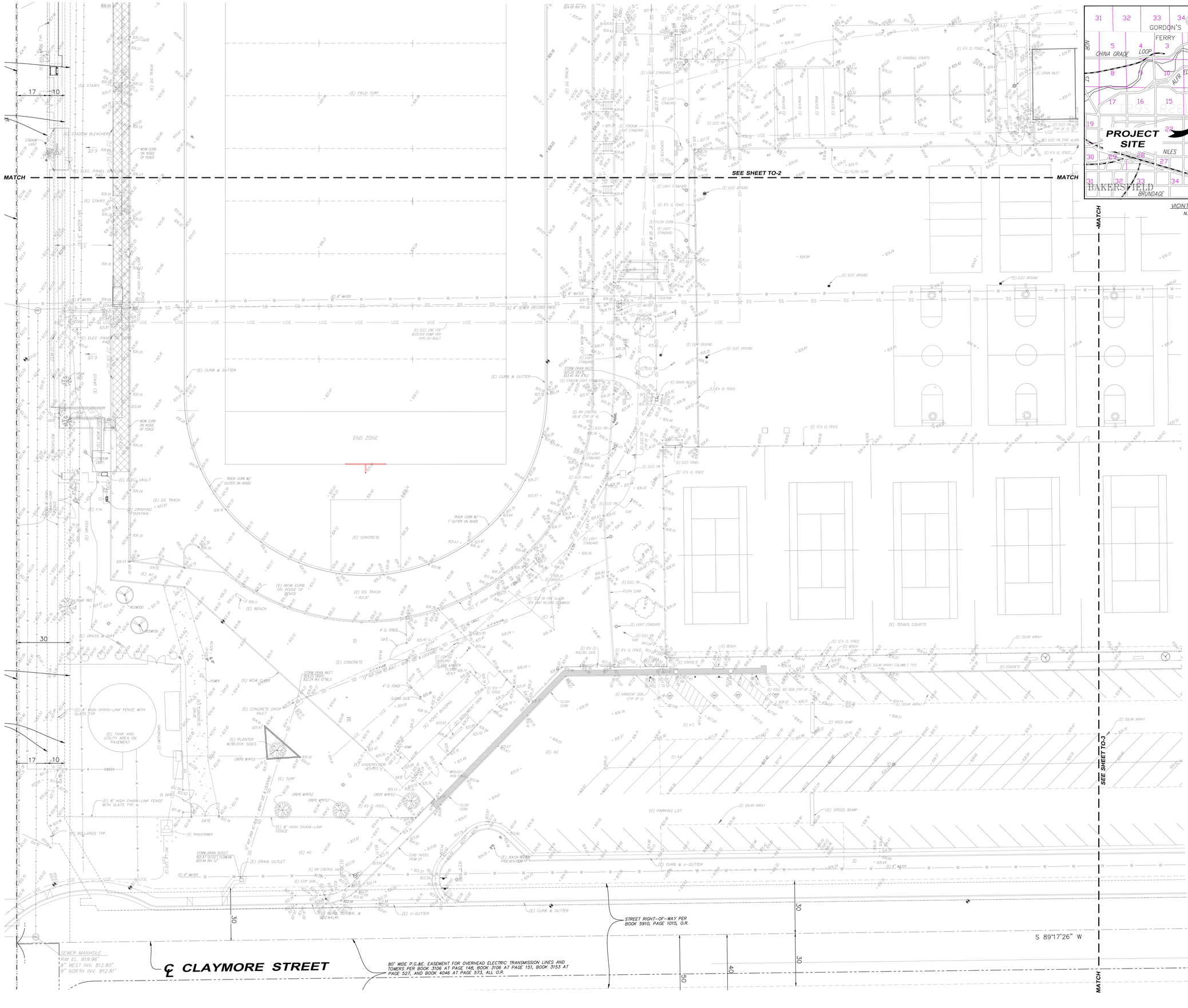
MATCH
SEE SHEET TO-2
MATCH
MATCH
SEE SHEET TO-3
PROJECT SITE
(E) FIELD TURF
END ZONE
(E) CONCRETE
(E) TENNIS COURTS
(E) PARKING LOT
(E) TANK AND UTILITY AREA ON PAVEMENT
(E) STADIUM BLEACHERS
(E) CURB & GUTTER
(E) 8" SEWER (RECORD 1969)
(E) 8" WATER
(E) 6'± CL FENCE
(E) 8'± CL FENCE
(E) 12'± CL FENCE
(E) 8' HIGH CHAIN-LINK FENCE WITH SLATS TYP.
(E) BOLLARDS TYP.
(E) TRANSFORMER
(E) V-GUTTER
(E) CURB & V-GUTTER
(E) BACKFLOW PREVENTER
(E) SOLAR ARRAY
(E) SOLAR ARRAY COLUMN (TYP.)
(E) SPEED BUMP
(E) BENCH
(E) DRINKING FOUNTAIN
(E) DRAIN INLET
(E) ELEC PB
(E) ELEC VAULT
(E) ELEC GROUND
(E) LIGHT STANDARD
(E) STADIUM LIGHT STANDARD
(E) IRR CONTROL VALVE (TYP OF 4)
(E) HANDBALL COURTS
(E) BLEACHERS
(E) SCOREBOARD
(E) TICKET BUILDING
(E) HANDICAP SIGN (TYP OF 2)
(E) FOUL NO SIGN (TYP OF 2)
(E) SPEED BUMP
(E) FLUSH CURB
(E) ELEC PB (TYP OF 3)
(E) ELEC PB (FIRE ALARM)
(E) ELEC GROUND
(E) ELEC PANEL
(E) DRAIN INLET
(E) 8'± CL FENCE
(E) 12'± CL FENCE
(E) 6'± CL FENCE
(E) 8'± CL ROLLING GATE
(E) 4' HIGH CHAIN-LINK
(E) 6' HIGH CHAIN-LINK
(E) 8" WATER
(E) 6" WATER
(E) 8" SEWER
(E) 8" GAS
(E) 8" FIRE
(E) 4" FIRE
(E) 2" WATER
(E) 6

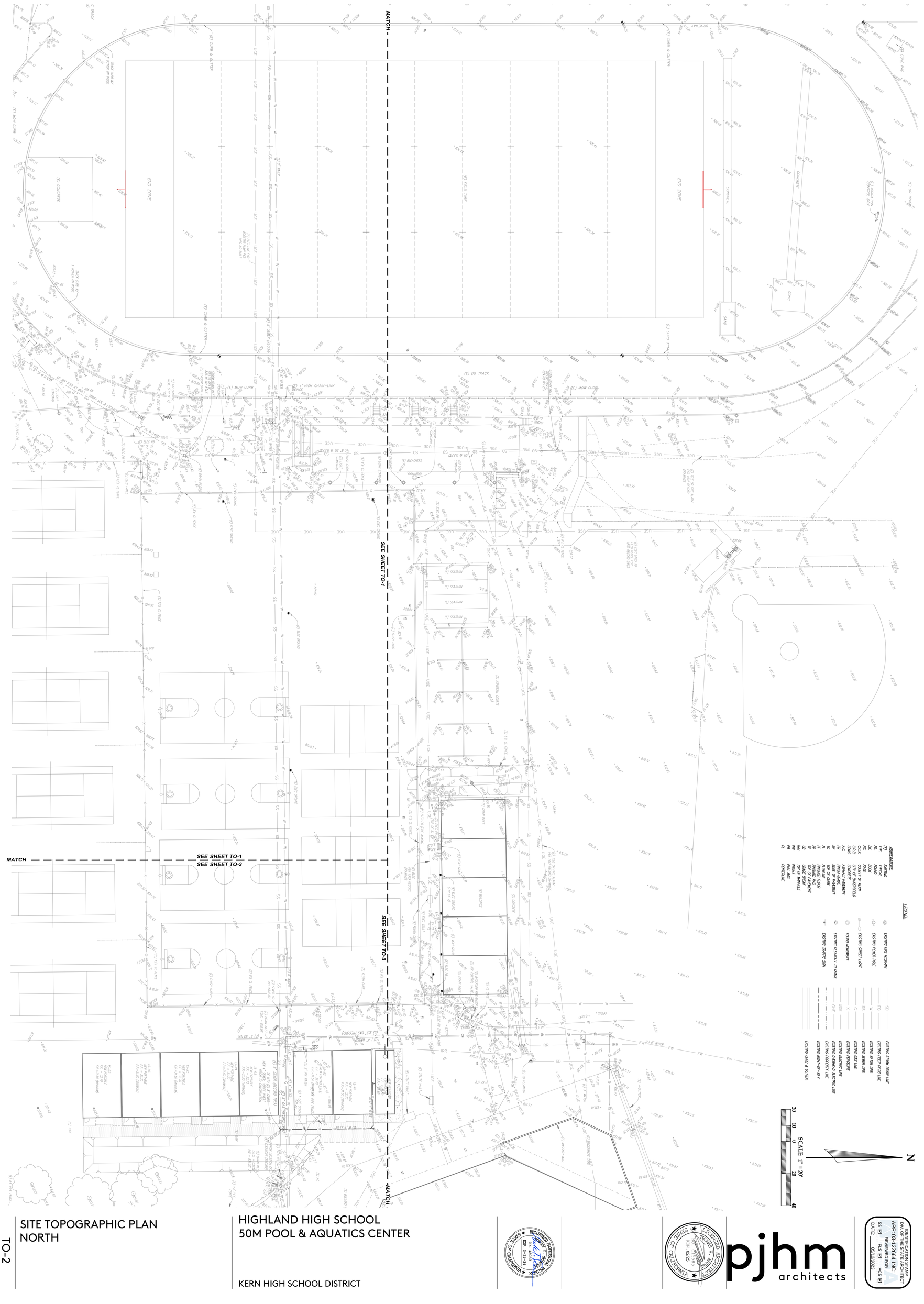

SITE TOPOGRAPHIC PLAN NORTH

TO-2

HIGHLAND HIGH SCHOOL
50M POOL & AQUATICS CENTER

KERN HIGH SCHOOL DISTRICT

REGISTERED PROFESSIONAL ENGINEER — CIVIL — STATE OF CALIFORNIA — EXP. 9-31-24

LICENSED ARCHITECT — THOMAS W. REESE — REN: 02/25 — STATE OF CALIFORNIA

pjhm architects

IDENTIFICATION STAMP
DIV. OF THE STATE ARCHITECT
APP: 03-122664 INC:
REVIEWED FOR
SS ☑ FLS ☑ ACS ☑
DATE: 09/12/2023

IDENTIFICATION STAMP
DIV. OF THE STATE ARCHITECT
APP: 03-122664 INC: 1
REVIEWED FOR
SS ☑ FLS ☑ ACS ☑
DATE: 05/12/2023

plhm architects

LICENSED ARCHITECT
ROBERT W. REGISTERED
No. C-31605
RENEWAL 08/31/2025
STATE OF CALIFORNIA

REGISTERED PROFESSIONAL ENGINEER
No. 43032
EXP: 3-31-24
CIVIL
STATE OF CALIFORNIA

KERN HIGH SCHOOL DISTRICT

HIGHLAND HIGH SCHOOL
50M POOL & AQUATICS CENTER

SITE TOPOGRAPHIC PLAN
EAST

TO-3

N

SCALE: 1" = 20'
20 10 0 20 40

LEGEND:
ABBREVIATIONS:
(E) EXISTING
TYP. TYPICAL
FD. FOUND
BK BOOK
PG. PAGE
COUNTY OF KERN
C.O.B. CITY OF BAKERSFIELD
CONC. CONCRETE
A.C. ASPHALT PAVEMENT
P.C. POINT OF CURVE
E.P. EDGE OF PAVEMENT
T.C. TOP OF CURB
F.L. FLOW LINE
F.F. FINISHED FLOOR
F.P. FINISHED PAD
T.A.C. TOP OF ASPHALT
G.B. GRADE BREAK
T.M.H. TOP OF MANHOLE
P.P. POWER POLE
P.B. PULL BOX
C.L. CENTERLINE
EXISTING FIRE HYDRANT
EXISTING POWER POLE
EXISTING STREET LIGHT
FOUND MONUMENT
EXISTING CLEANOUT TO GRADE
EXISTING RAPTIC SIGN
EXISTING STORM DRAIN LINE
EXISTING FIBER OPTIC LINE
EXISTING WATER LINE
EXISTING SEWER LINE
EXISTING GAS LINE
EXISTING FENCELINE
EXISTING ELECTRIC LINE
EXISTING OVERHEAD ELECTRIC LINE
EXISTING PROPERTY LINE
EXISTING RIGHT-OF-WAY
EXISTING CURB & GUTTER

BLDG 800
(E) BUILDING 800
FF = 834.31'

BLDG 900
(E) BUILDING 900
FF =

BLDG 1300

PARKING LOT "C"

MATCH

SEE SHEET TO-2

SEE SHEET TO-1

MATCH

SEE SHEET TO-2

MATCH

S 89°17'26" W

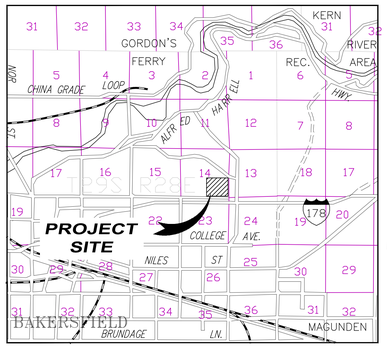

VICINITY MAP
N.T.S.

BENCHMARK

TOP OF CAP ON CITY OF BAKERSFIELD CONCRETE MONUMENT IN UMPHOLE AT THE CENTERLINE INTERSECTION OF AUBURN STREET AND PIPER WAY PER CITY OF BAKERSFIELD BENCH MARK 900K.

ELEVATION = 804.26'

BASIS OF BEARINGS

THE BEARING OF N89°17'26"E SHOWN FOR THE SOUTH LINE OF THE SOUTHEAST QUARTER OF SECTION 14, T.29S., R.28E., M.D.M. ON RECORD OF SURVEY, R.S. BOOK 9, PAGE 91, WAS USED AS THE BASIS OF BEARINGS HEREON.

LEGAL DESCRIPTION

BEING A PORTION OF THE SOUTHEAST QUARTER OF SECTION 14, T.29S., R.28E., M.D.B.M.

ADDRESS

2900 ROYAL SCOTS WAY

APN

146-020-23

UTILITY NOTE

NOT ALL UTILITIES WERE LOCATED BY THIS SURVEY AND SWANSON ENGINEERING, INC. ASSUMES NO RESPONSIBILITY FOR UNDERGROUND UTILITIES OR FACILITIES NOT SHOWN OR FOR INFORMATION OBTAINED FROM OUTSIDE SOURCES.

LEGEND:

ABBREVIATIONS:

(E)	EXISTING
TYP.	TYPICAL
FD.	FOUND
BK.	BOOK
PG.	PAGE
C.O.K.	COUNTY OF KERN
C.O.B.	CITY OF BAKERSFIELD
CONC.	CONCRETE
A.C.	ASPHALT PAVEMENT
FG	FINISH GRADE
EP	EDGE OF PAVEMENT
TC	TOP OF CURB
FL	FLOWLINE
FF	FINISHED FLOOR
FP	FINISHED PAD
TP	TOP OF PAVEMENT
GB	GRADE BREAK
MH	TOP OF MANHOLE
INV	INVERT
PB	PULL BOX
CL	CENTERLINE

EXISTING FIRE HYDRANT
EXISTING POWER POLE
EXISTING STREET LIGHT
FOUND MONUMENT
EXISTING CLEANOUT TO GRADE
EXISTING TRAFFIC SIGN

EXISTING STORM DRAIN LINE
EXISTING FIBER OPTIC LINE
EXISTING WATER LINE
EXISTING SEWER LINE
EXISTING GAS LINE
EXISTING FENCELINE
EXISTING ELECTRIC LINE
EXISTING OVERHEAD ELECTRIC LINE
EXISTING PROPERTY LINE
EXISTING RIGHT-OF-WAY
EXISTING CURB & GUTTER
DEMO BOUNDARY LIMITS
(#) DEMOLITION NOTE

BLDG 1300

END ZONE

SEWER MANHOLE
RIM EL. 819.96'
8" WEST INV. 812.80'
8" NORTH INV. 812.81'

℄ CLAIMORE STREET

80' WIDE P.G.&E. EASEMENT FOR OVERHEAD ELECTRIC TRANSMISSION LINES AND TOWERS PER BOOK 3306 AT PAGE 148, BOOK 3106 AT PAGE 151, BOOK 3153 AT PAGE 321, AND BOOK 4046 AT PAGE 373, ALL O.R.

℄ OF 80' WIDE P.G.&E. EASEMENT

NORTHERLY TRACT BOUNDARY

STREET RIGHT-OF-WAY PER BOOK 5910, PAGE 1015, O.R.

S 89°17'26" W

℄ CLAIMORE STREET

℄ PIPER WAY

TRACT NO. 3943

SITE DEMOLITION NOTES:

1. REMOVE (E) ACCESSIBLE PARKING STALL STRIPING, SIGNAGE, AND WHEEL BLOCKS.
2. REMOVE (E) PARKING STALLS STRIPING
3. REMOVE (E) CONCRETE
4. REMOVE (E) A.C. PAVEMENT
5. REMOVE (E) FLUSH CURB
6. (E) CONCRETE CURB TO REMAIN. PROTECT IN PLACE.
7. (E) SITE LIGHT TO REMAIN. PROTECT IN PLACE.
8. REMOVE (E) FENCE.
9. (E) FLUSH CONCRETE CURB TO REMAIN. PROTECT IN PLACE.
10. REMOVE (E) TRUNCATED DOMES
11. REMOVE (E) SITE LIGHT AND ASSOCIATED PULL BOXES AND CONDUITS. ENSURE OTHER ELECTRICAL EQUIPMENT REMAINS INTACT. SALVAGE LIGHT FIXTURE AND POLE. GIVE TO DISTRICT.
12. REMOVE (E) TREE
13. REMOVE (E) WATER LINE IN POOL AREA. SEE CIVIL PLANS FOR DETAILS TO REROUTE AROUND POOL.
14. REMOVE (E) SEWER LINE IN POOL AREA. SEE CIVIL PLANS FOR DETAILS TO REROUTE AROUND POOL.
15. ELECTRICAL EQUIPMENT AND PAD TO REMAIN. PROTECT IN PLACE.
16. (E) TENNIS COURT FENCE TO REMAIN. PROTECT IN PLACE.
17. (E) FENCE TO REMAIN. PROTECT IN PLACE.
18. (E) ELECTRICAL CONDUITS TO BE REMOVED FROM POOL AREA. SEE ELECTRICAL PLANS FOR REROUTING DETAILS.
19. REMOVE (E) HANDBALL COURT COMPLETELY.
20. (E) TREE TO REMAIN. PROTECT IN PLACE.
21. (E) CONCRETE CURB TO BE REMOVED.
22. (E) STORM DRAIN LINE TO REMAIN. PROTECT IN PLACE.
23. (E) STORM DRAIN LINE TO BE REMOVED. SEE CIVIL PLANS FOR DETAILS.
24. (E) ELECTRICAL VAULT TO REMAIN. PROTECT IN PLACE.
25. (E) WATER BACKFLOW DEVICE TO REMAIN. PROTECT IN PLACE.
26. (E) DRINKING FOUNTAIN TO REMAIN. PROTECT IN PLACE.
27. REMOVE (E) DRAIN INLET AND CONCRETE SKIRT.
28. REMOVE (E) DRAIN INLET/JUNCTION BOX. PLANS SHOW A DRAIN INLET IN THIS APPROXIMATE LOCATION.
29. REMOVE (E) DRAIN INLET/OUTLET. CONNECT (E) STORM DRAIN PIPE TO NEW STORM DRAIN PIPE PER GRADING PLAN.
30. (E) TRACK CURB, FENCE POSTS, AND FENCING TO REMAIN. PROTECT IN PLACE. CHIP CONCRETE FENCE POST FOOTINGS TO 4" BELOW TOP OF CONCRETE DESIGN SURFACE SO NEW CONCRETE CAN BE POURED CONTINUOUSLY OVER FOOTING.
31. (E) STORM DRAIN PIPE TO THE SOUTH TO REMAIN IN PLACE AND TO REMAIN FUNCTIONAL SOUTH OF (E) DRAIN INLET. CONNECT TO NEW INLET BOX PER GRADING PLAN..
32. (E) SHALLOW SUMP TO BE BACKFILLED PER GRADING PLAN.
33. REMOVE (E) WHEEL STOP.
34. (E) WHEEL STOP TO REMAIN. PROTECT IN PLACE.
35. (E) BASKETBALL STANDARDS TO BE SALVAGED AND PROVIDED TO THE DISTRICT.
36. (E) BASKETBALL STANDARDS TO REMAIN. PROTECT IN PLACE.
37. REMOVE (E) CHAIN LINK GATE AND HINGE. HINGE POST AND LATCH POST TO REMAIN. PROTECT IN PLACE.

N

SCALE: 1" = 30'
30 15 0 30 60

IDENTIFICATION STAMP
DIV. OF THE STATE ARCHITECT
APP: 03-122664 INC:
REVIEWED FOR
SS ☑ FLS ☑ ACS ☑
DATE: 05/12/2023

pjhm architects

LICENSED ARCHITECT
RICHARD W. RIDDELL
REN. 02/25
STATE OF CALIFORNIA

SWANSON ENGINEERING, INC.
2000 21st Street, Suite 100 Bakersfield, CA 93301
ph.(661) 633-4616 fax.(661) 633-4777
CRM# 22-053

REGISTERED PROFESSIONAL ENGINEER
ROBERT T. SWANSON
No. 43032
EXP. 3-31-24
STATE OF CALIFORNIA

HIGHLAND HIGH SCHOOL
50M POOL & AQUATICS CENTER
KERN HIGH SCHOOL DISTRICT

1 ADDENDUM NO. 1

SITE DEMOLITION PLAN

C-0

BENCHMARK

TOP OF CAP ON CITY OF BAKERSFIELD CONCRETE MONUMENT IN LAMPHOLE AT THE CENTERLINE INTERSECTION OF AUBURN STREET AND PIPER WAY PER CITY OF BAKERSFIELD BENCH MARK BOOK.

ELEVATION = 804.26'

BASIS OF BEARINGS

THE BEARING OF N89°17'26"E SHOWN FOR THE SOUTH LINE OF THE SOUTHEAST QUARTER OF SECTION 14, T.29S., R.28E., M.D.M. ON RECORD OF SURVEY, R.S. BOOK 9, PAGE 91, WAS USED AS THE BASIS OF BEARINGS HEREON.

LEGAL DESCRIPTION

BEING A PORTION OF THE SOUTHEAST QUARTER OF SECTION 14, T.29S., R.28E., M.D.B.M.

ADDRESS

2900 ROYAL SCOTS WAY

APN

146-020-23

UTILITY NOTE

NOT ALL UTILITIES WERE LOCATED BY THIS SURVEY AND SWANSON ENGINEERING, INC. ASSUMES NO RESPONSIBILITY FOR UNDERGROUND UTILITIES OR FACILITIES NOT SHOWN OR FOR INFORMATION OBTAINED FROM OUTSIDE SOURCES.

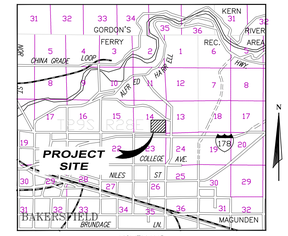

VICINITY MAP
N.T.S.

IDENTIFICATION STAMP
DIV. OF THE STATE ARCHITECT
APP: 03-122664 INC:
REVIEWED FOR
SS ☑ FLS ☑ ACS ☑
DATE: 05/12/2023

pjhm architects

LICENSED ARCHITECT
HOWARD W. RANSOM
No. C15385
REN. 02/25
STATE OF CALIFORNIA

SWANSON ENGINEERING, INC.
2000 E. Lamberson Rd. #130, Simi Valley, CA 93063
ph.(661) 823-4616 • (661) 823-4779 fax
CSF# 22-053

REGISTERED PROFESSIONAL ENGINEER
ROBERT T. SWANSON
No. 43032
EXP. 3-31-24
STATE OF CALIFORNIA

LA Office: 837 Traction Avenue, #410, Los Angeles, CA 90013 • LA Phone: 213.278.0172 • Web: pjhm.com
SD Office: 804 Pier View Way #103, Oceanside, CA 92054 • SD Phone: 760.730.5527
OC Office: 24461 Ridge Route Drive #100, Laguna Hills, CA 92653 • OC Phone: 949.496.6191

HIGHLAND HIGH SCHOOL
50M POOL & AQUATICS CENTER

KERN HIGH SCHOOL DISTRICT

GRADING PLAN - NORTH

C-1

MATCH

SEE DETAIL 2/C-4

SEE SHEET C-2

SEE POOL DECK GRADING PLAN FOR GRADES WITHIN POOL DECK AREA (TYP.)

F.F.= 830.33
F.P.= 829.75

F.F.= 830.45
F.P.= 829.87

LIMITS OF OVEREXCAVATION

5' MIN. (TYP.)

CONNECT TO FOUNDATION DRAIN PIPE

CONNECT TO ROOF DRAIN DOWNSPOUT

CONNECT STORM DRAIN PIPE TO TRENCH DRAIN

MATCH FLUSH WITH (E) CONCRETE

MATCH FLUSH WITH (E) A.C. (TYP.)

RELOCATE (E) TELEPHONE PULL BOX AWAY FROM FENCE AND SET FLUSH WITH NEW CONCRETE.

REMOVE (E) DRAIN INLET/OUTLET AND CONNECT (E) STORM DRAIN PIPE TO NEW STORM DRAIN PIPE

ADJUST (E) BACKFLOW DEVICE ELEVATION TO WORK WITH NEW FINISHED GRADE.

PROTECT (E) TREES IN PLACE

(E) LIGHT STANDARD TO REMAIN. PROJECT IN PLACE.

12" SDR35 PVC @ 0.5%

12" SDR35 PVC @ 1%

12" SDR35 PVC @ 1.1%

6" SDR35 PVC @ 0.5%

4" SDR35 PVC @ 0.5%

6" SDR35 PVC @ 1%

4" SDR35 PVC @ 2%

8" SDR35 PVC @ 1%

4" SDR35 PVC @ 4%

4" SDR35 PVC @ 10%

NOTE:
VERIFY FINISH PAD ELEVATION FOR ALL BUILDINGS WITH STRUCTURAL FOUNDATION PLANS

ABBREVIATIONS:

(E)	EXISTING
TYP.	TYPICAL
FD.	FOUND
BK.	BOOK
PG.	PAGE
C.O.K.	COUNTY OF KERN
C.O.B.	CITY OF BAKERSFIELD
CONC	CONCRETE
A.C.	ASPHALT PAVEMENT
FG	FINISH GRADE
EP	EDGE OF PAVEMENT
TC	TOP OF CURB
FL	FLOWLINE
FF	FINISHED FLOOR
FP	FINISHED PAD
TP	TOP OF PAVEMENT
GB	GRADE BREAK
TMH	TOP OF MANHOLE
INV	INVERT
PB	PULL BOX
CL	CENTERLINE

LEGEND:

- EXISTING FIRE HYDRANT
- EXISTING POWER POLE
- EXISTING STREET LIGHT
- FOUND MONUMENT
- EXISTING CLEANOUT TO GRADE
- EXISTING TRAFFIC SIGN
- PROPOSED FIRE HYDRANT
- PROPOSED DRAIN INLET
- PROPOSED CLEANOUT TO GRADE

- SD — EXISTING STORM DRAIN LINE
- FO — EXISTING FIBER OPTIC LINE
- W — EXISTING WATER LINE
- SS — EXISTING SEWER LINE
- G — EXISTING GAS LINE
- X — EXISTING FENCELINE
- UGE — EXISTING ELECTRIC LINE
- OHE — EXISTING OVERHEAD ELECTRIC LINE
- EXISTING PROPERTY LINE
- EXISTING RIGHT-OF-WAY
- EXISTING CURB & GUTTER
- SD — PROPOSED STORM DRAIN LINE
- PROPOSED 4" PERFORATED WALL FOUNDATION DRAIN PIPES
- W — PROPOSED WATER LINE
- SS — PROPOSED SEWER LINE
- FW — PROPOSED WATER LINE
- X — PROPOSED FENCELINE
- POOL DECK BOUNDARY

N

SCALE: 1" = 10'
10 5 0 10 20

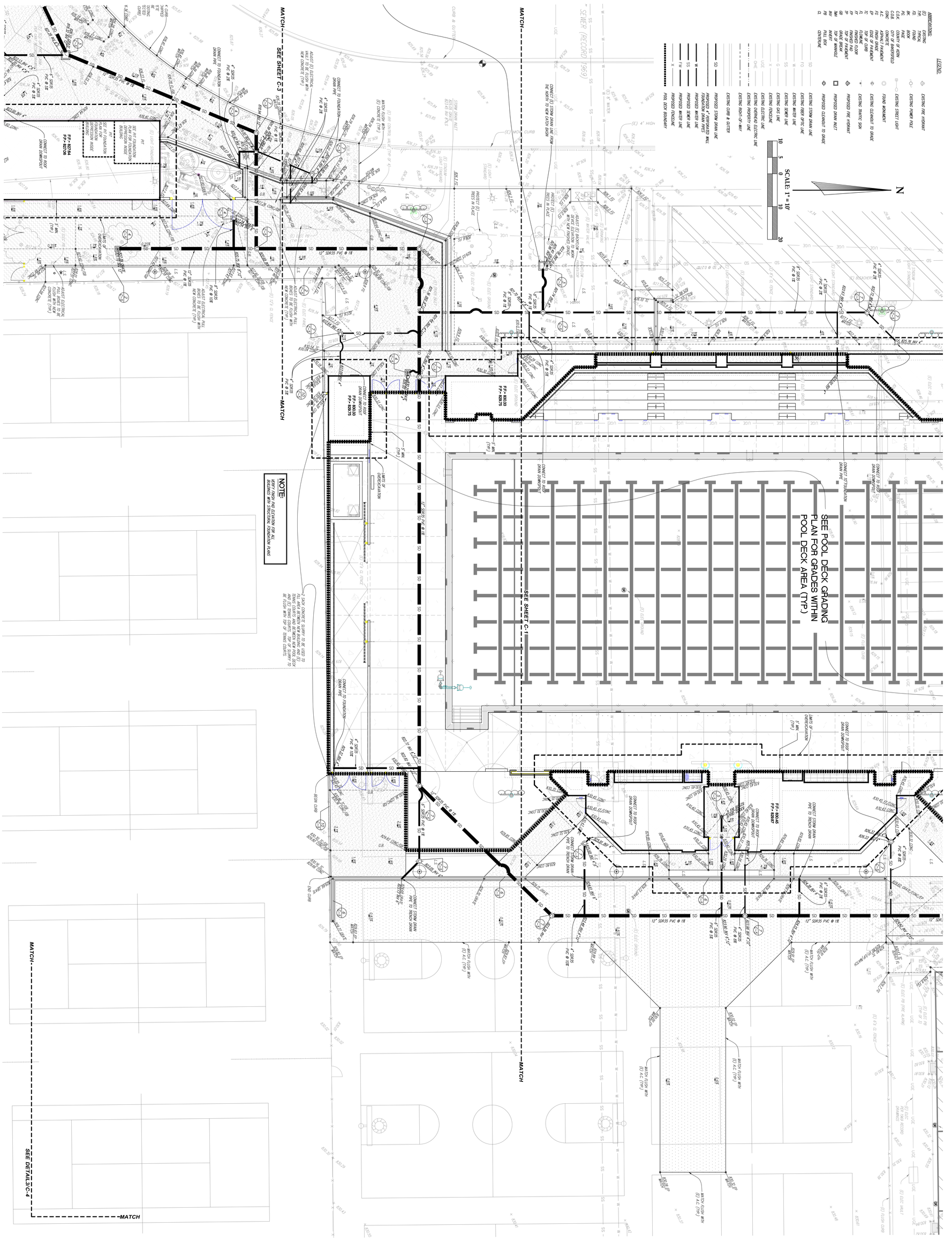

GRADING PLAN - CENTRAL

HIGHLAND HIGH SCHOOL
50M POOL & AQUATICS CENTER

KERN HIGH SCHOOL DISTRICT

SWANSON ENGINEERING, INC.
2000 Oak Street, Suite 150 ~ Bakersfield, CA 93301
p:(661) 831-4919; f:(661) 873-4777
JOB# - 22-053 MCN

pjhm architects

IDENTIFICATION STAMP
DIV. OF THE STATE ARCHITECT
APP: 03-122664 INC:
REVIEWED FOR
SS ☑ FLS ☑ ACS ☑
DATE: 05/12/2023

OC Office: 24461 Ridge Route Drive #100, Laguna Hills, CA 92653 • OC Phone: 949.496.6191 • SD Office: 804 Pier View Way #103, Oceanside, CA 92054 • SD Phone: 760.730.5527 • LA Office: 837 Traction Avenue, #410, Los Angeles, CA 90013 • LA Phone: 213.278.0172 • Web: pjhm.com

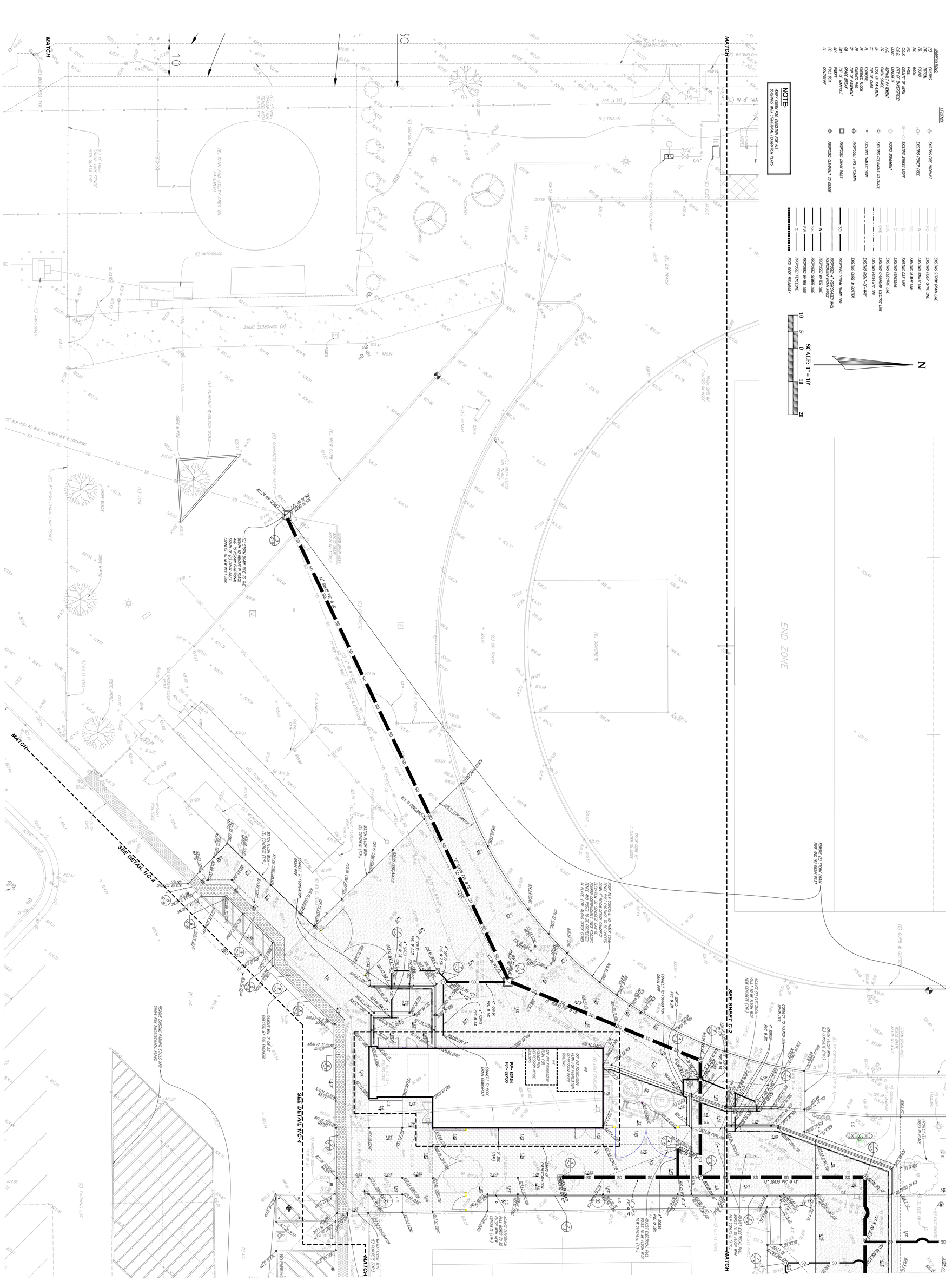

GRADING PLAN - SOUTHWEST

HIGHLAND HIGH SCHOOL
50M POOL & AQUATICS CENTER

KERN HIGH SCHOOL DISTRICT

SWANSON ENGINEERING, INC.
2000 Oak Street, Suite 150 ~ Bakersfield, CA 93301
p:(661) 831-4919; f:(661) 873-4777
JOB#- 22-053 MCN

pjhm architects

IDENTIFICATION STAMP
DIV. OF THE STATE ARCHITECT
APP: 03-122664 INC:
REVIEWED FOR
SS ☑ FLS ☑ ACS ☑
DATE: 05/12/2023

C-3

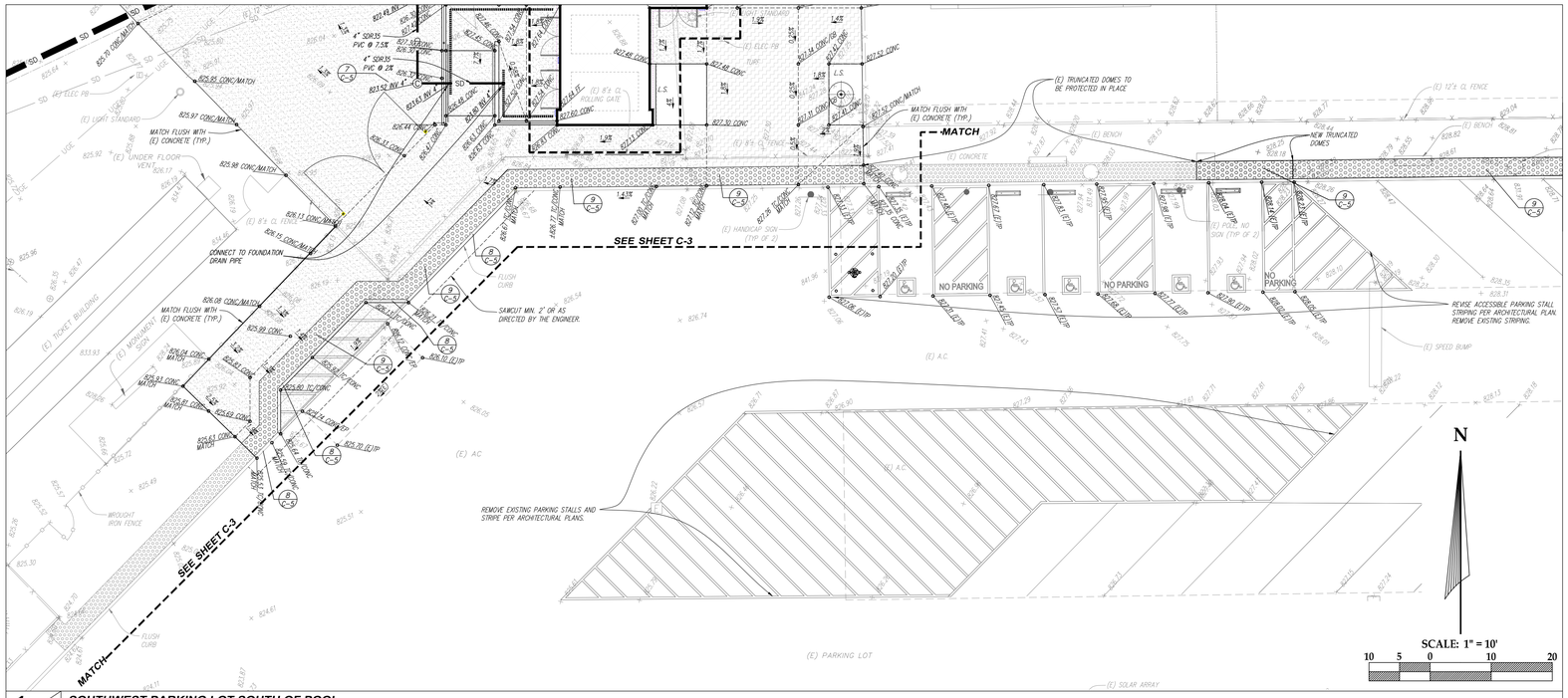

1 C-4 SOUTHWEST PARKING LOT SOUTH OF POOL
SCALE: 1"=10'

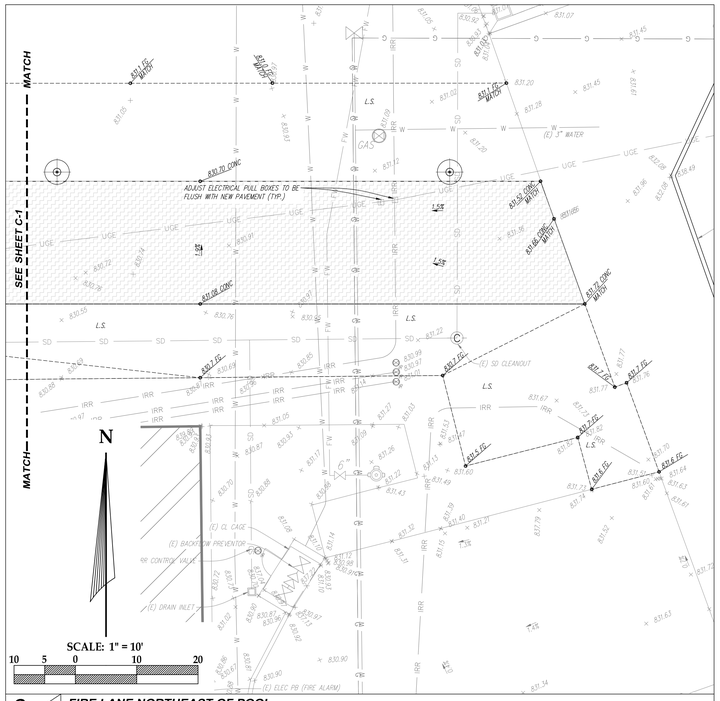

2 C-4 FIRE LANE NORTHEAST OF POOL
SCALE: 1"=10'

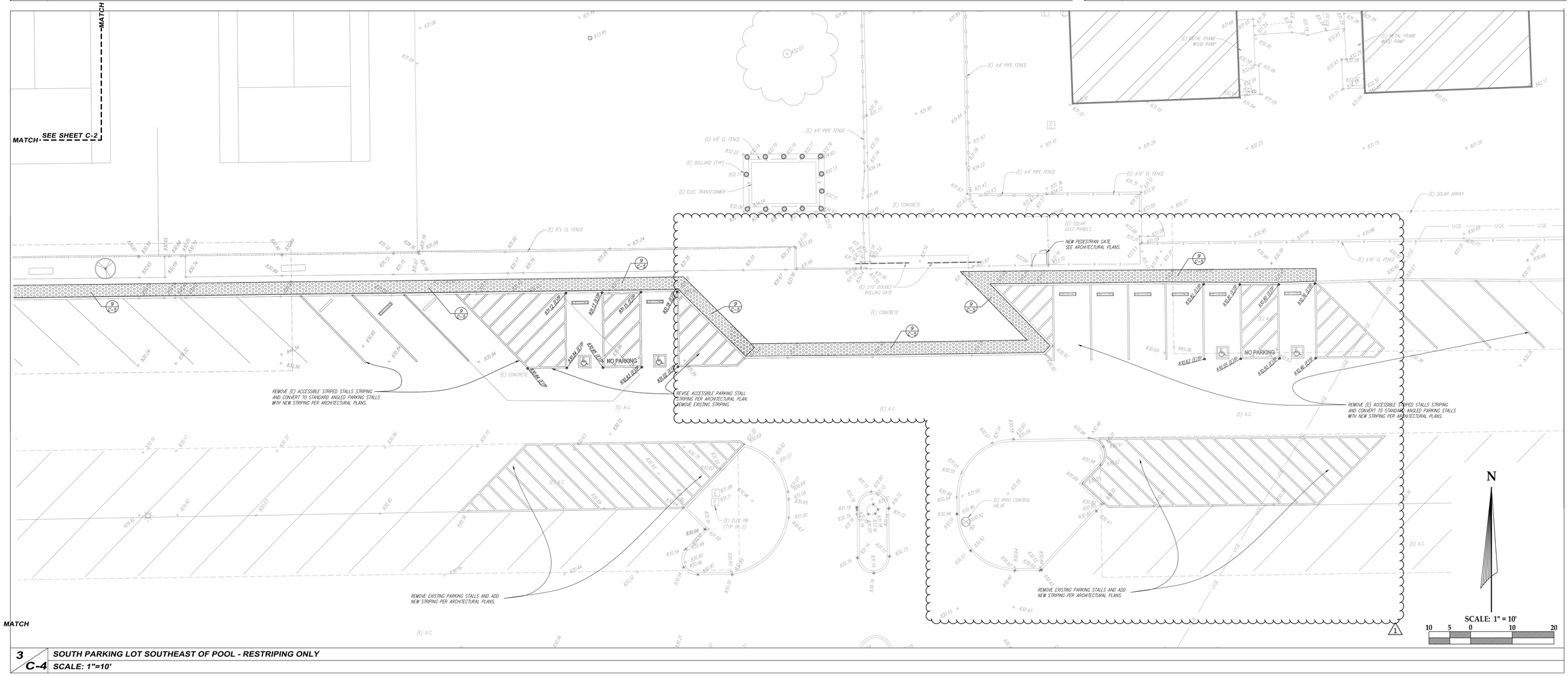

3 C-4 SOUTH PARKING LOT SOUTHEAST OF POOL - RESTRIPING ONLY
SCALE: 1"=10'

IDENTIFICATION STAMP
DIV. OF THE STATE ARCHITECT
APP: 03-122664 INC:
REVIEWED FOR
SS ☑ FLS ☑ ACS ☑
DATE: 05/12/2023

pjhm architects

LICENSED ARCHITECT
THOMAS W. KRUSE
NO. C15585
REN. 02/25
STATE OF CALIFORNIA

SWANSON ENGINEERING, INC.
2000 Oak Street, Suite 150 ~ Bakersfield, CA 93301
p:(661) 831-4919; f:(661) 873-4777
JOB#: 22-053
MCN

REGISTERED PROFESSIONAL ENGINEER
No. 43032
EXP. 3-31-24
STATE OF CALIFORNIA

HIGHLAND HIGH SCHOOL
50M POOL & AQUATICS CENTER

KERN HIGH SCHOOL DISTRICT

1 ADDENDUM NO. 1

GRADING PLAN - ADDITIONAL VIEWS

C-4

OC Office: 24461 Ridge Route Drive #100, Laguna Hills, CA 92653 • OC Phone: 949.496.6191 • SD Office: 804 Pier View Way #103, Oceanside, CA 92054 • SD Phone: 760.730.5527 • LA Office: 837 Traction Avenue, #410, Los Angeles, CA 90013 • LA Phone: 213.278.0172 • Web: pjhm.com

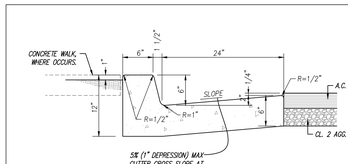

NOTE:
CLASS "3" CONCRETE (5 1/2 SACK)
EXPANSION JOINTS EA. 30'
WEAKENED PLANE JTS. EA. 15'
POUR ON COMPACTED SUBGRADE

1 C-5 6" CURB & GUTTER

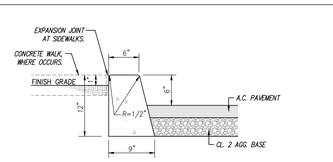

NOTE:
CLASS "3" CONCRETE (5 1/2 SACK)
EXPANSION JOINTS EA. 30'
WEAKENED PLANE JTS. EA. 15'
POUR ON COMPACTED SUBGRADE

2 C-5 6" CONCRETE CURB

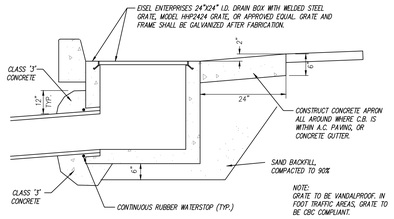

NOTE:
OPENINGS IN GRATES LOCATED IN PEDESTRIAN PATH OF TRAVEL SHALL NOT BE MORE THAN 1/2" IN LENGTH IN THE DIRECTION OF TRAVEL. ELONGATED OPENINGS SHALL BE PLACED SO THE LONG DIMENSION IS PERPENDICULAR TO THE DOMINANT DIRECTION OF TRAVEL IN COMPLIANCE WITH SECTION 118-302.3.

3 C-5 CATCH BASIN

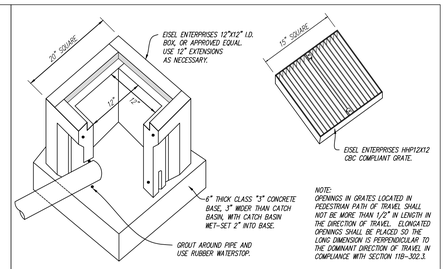

NOTE:
OPENINGS IN GRATES LOCATED IN PEDESTRIAN PATH OF TRAVEL SHALL NOT BE MORE THAN 1/2" IN LENGTH IN THE DIRECTION OF TRAVEL. ELONGATED OPENINGS SHALL BE PLACED SO THE LONG DIMENSION IS PERPENDICULAR TO THE DOMINANT DIRECTION OF TRAVEL IN COMPLIANCE WITH SECTION 118-302.3.

4 C-5 EISEL ENTERPRISES 12X12 DRAIN BOX

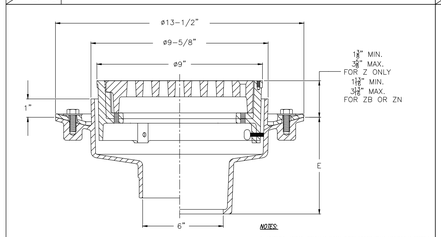

NOTES:
1. PROVIDE DURA-COATED CAST IRON BODY WITH POLISHED NICKEL BRONZE TOP.
2. INSTALL PER MANUFACTURER'S RECOMMENDATIONS.
3. PROVIDE CBC AND ADA COMPLIANT GRATE (PART #36965-1)

5 C-5 ZURN Z520 HEAVY-DUTY ADJUSTABLE FLOOR DRAIN

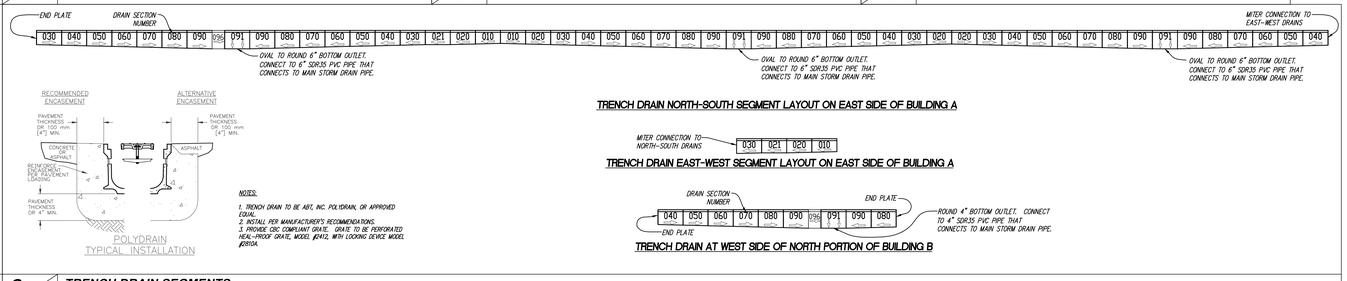

NOTES:
1. TRENCH DRAIN TO BE ABT, INC. POLYDRAIN, OR APPROVED EQUAL.
2. INSTALL PER MANUFACTURER'S RECOMMENDATIONS.
3. PROVIDE CBC COMPLIANT GRATE. GRATE TO BE PERFORATED HEAL-PROOF GRATE, MODEL #2412, WITH LOCKING DEVICE MODEL #2RTA.

TRENCH DRAIN NORTH-SOUTH SEGMENT LAYOUT ON EAST SIDE OF BUILDING A

TRENCH DRAIN EAST-WEST SEGMENT LAYOUT ON EAST SIDE OF BUILDING A

TRENCH DRAIN AT WEST SIDE OF NORTH PORTION OF BUILDING B

6 C-5 TRENCH DRAIN SEGMENTS

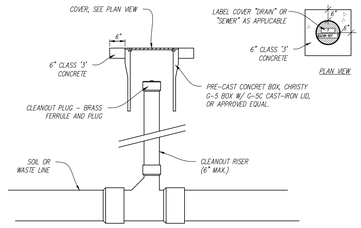

7 C-5 CLEANOUT TO GRADE

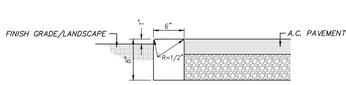

NOTE:
CLASS "3" CONCRETE (5 1/2 SACK)
EXPANSION JOINTS EA. 30'
WEAKENED PLANE JTS. EA. 15'
POUR ON COMPACTED SUBGRADE

8 C-5 FLUSH CURB

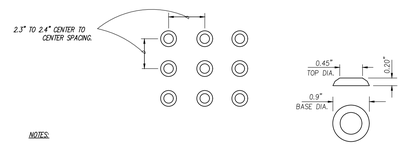

NOTES:
1. DOMES ARE TO MEET ALL CBC REQUIREMENTS.
2. NO GLUE DOWN DOMES ARE TO BE USED.

RAISED TRUNCATED DOME PATTERN (IN-LINE) DETECTABLE WARNING SURFACE.

9 C-5 TRUNCATED DOMES

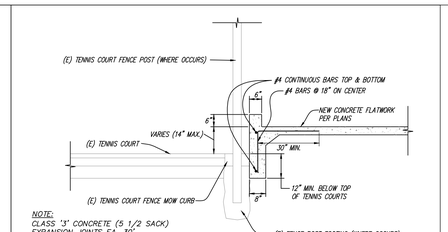

NOTE:
CLASS "3" CONCRETE (5 1/2 SACK)
EXPANSION JOINTS EA. 30'
WEAKENED PLANE JTS. EA. 15'
POUR ON COMPACTED SUBGRADE

10 C-5 CONCRETE EDGE ALONG TENNIS COURT FENCE

GRADING NOTES

1. ALL GRADING SHALL CONFORM TO THE CITY OF BAKERSFIELD ORDINANCES AND STANDARDS PERTAINING THERETO [CALIFORNIA BUILDING CODE, 2019] AND SHALL BE SUPERVISED AS ENGINEERED GRADING IN ACCORDANCE WITH CITY OF BAKERSFIELD ORDINANCES.

2. THE DESIGN ENGINEER SHALL EXERCISE SUFFICIENT SUPERVISORY CONTROL DURING GRADING AND CONSTRUCTION TO INSURE COMPLIANCE WITH THE PLANS, SPECIFICATIONS AND CODE WITHIN HIS PURVIEW.

3. THE SOIL ENGINEER, DESIGN ENGINEER, DSA PROJECT INSPECTOR, AND BUILDING OFFICIAL SHALL BE NOTIFIED 48 HOURS PRIOR TO PLACING ANY MATERIAL.

4. CONTRACTOR AGREES THAT HE SHALL ASSUME SOLE AND COMPLETE RESPONSIBILITY FOR JOB SITE CONDITIONS DURING THE COURSE OF CONSTRUCTION OF THIS PROJECT INCLUDING SAFETY OF ALL PERSONS AND PROPERTY; THAT THIS REQUIREMENT SHALL APPLY CONTINUOUSLY AND NOT BE LIMITED TO NORMAL WORKING HOURS; AND THAT THE CONTRACTOR SHALL DEFEND, INDEMNIFY, AND HOLD THE OWNER, ARCHITECT, AND THE ENGINEER HARMLESS FROM ANY LIABILITY, REAL OR ALLEGED, IN CONNECTION WITH THE PERFORMANCE OF WORK ON THIS PROJECT, EXCEPTING FOR LIABILITY ARISING FROM THE SOLE NEGLIGENCE OF THE OWNER, ARCHITECT, OR THE ENGINEER.

5. THE GRADING CONTRACTOR SHALL CONTACT ALL COMPANIES WITH UNDERGROUND FACILITIES PRIOR TO BEGINNING CONSTRUCTION AND VERIFY THE LOCATION AND DEPTH OF ALL UNDERGROUND FACILITIES, INCLUDING TELEPHONE, ELECTRIC, WATER, SEWER, OIL AND GAS LINES. THE ENGINEER ASSUMES NO RESPONSIBILITY FOR BURIED LINES NOT INDICATED ON THE PLAN OR FOR INFORMATION OBTAINED FROM OUTSIDE SOURCES. (USA - 811)

6. THE GRADING CONTRACTOR SHALL BE RESPONSIBLE FOR GRADING ALL AREAS TO + OR - 0.10 FOOT. IF AN AREA SHOULD BE FOUND TO BE MORE THAN 0.10 FOOT OUT OF TOLERANCE AFTER COMPACTING AND COMPLETION OF GRADING, THE CONTRACTOR SHALL RETURN AND CORRECT THE GRADING AT NO COST TO THE OWNER.

7. THE CONTRACTOR SHALL WATER AS REQUIRED DURING THE GRADING OPERATIONS TO PREVENT THE OCCURRENCE OF A DUST NUISANCE AND SHALL PROTECT CURBS AND OTHER OBJECTS WHICH ARE TO REMAIN. DUST CONTROL SHALL CONFORM TO THE SAN JOAQUIN VALLEY UNIFIED AIR POLLUTION CONTROL DISTRICT REGULATIONS.

8. EXCAVATION - EXCAVATION SHALL CONSIST OF ALL EXCAVATION INVOLVED IN GRADING THE PROJECT AS SHOWN ON THE PLANS. THIS SHALL INCLUDE EXPORTING MATERIAL TO AN OFF-SITE LOCATION, AS REQUIRED.

9. EMBANKMENTS - EMBANKMENT CONSTRUCTION SHALL CONSIST OF CONSTRUCTING EMBANKMENTS, INCLUDING THE PREPARATION OF AREAS WHERE THEY ARE TO BE PLACED, THE CONSTRUCTION OF DIKES WITHIN OR OUTSIDE THE CONSTRUCTION AREA, THE PLACING AND COMPACTING OF APPROVED MATERIAL WITHIN THE CONSTRUCTION AREA WHERE UNSUITABLE MATERIAL HAS BEEN REMOVED, AND THE PLACING AND COMPACTING OF EMBANKMENT MATERIAL IN HOLES, PITS, AND DEPRESSIONS. IT SHOULD ALSO CONSIST OF PREPARING SUB-GRADE AT THE GRADING PLANE, CONFORMING TO THE GRADE TOLERANCE, DOING NECESSARY PLOWING OR BENCHING, IMPORTING OR EXPORTING, PLACING AND COMPACTING MATERIAL TO THE LINE AND GRADES SHOWN ON THE PLANS. ALL EMBANKMENT CONSTRUCTION SHALL BE CONSIDERED AS INCLUDED IN THE CONTRACT PRICE.

10. THE WORK EMBRACED HEREIN SHALL BE IN ACCORDANCE WITH THE STANDARD SPECIFICATIONS OF THE STATE OF CALIFORNIA DEPARTMENT OF TRANSPORTATION DATED JULY 2018 (UNLESS OTHERWISE SPECIFIED), ROOFAID AS THE SAME MAY APPLY IN ACCORDANCE WITH THE NOTES HEREIN. IN CASE OF CONFLICT WITH THE STANDARD SPECIFICATIONS AND ANY NOTES HEREON, THE NOTES HEREON SHALL TAKE PRECEDENCE OVER AND BE USED IN LIEU OF SUCH CONFLICTING PORTIONS. SAID SPECIFICATIONS SHALL APPLY BUT NOT BE LIMITED TO THE FOLLOWING:

A) ALL CONCRETE SHALL BE CLASS "3" USING TYPE V CEMENT AS IN ACCORDANCE WITH SECTION 90 AND SHALL HAVE AT LEAST 2500 PSI COMPRESSIVE STRENGTH AT 28 DAYS, PER CALTRANS STANDARD SPECIFICATIONS (2006) UNLESS OTHERWISE SPECIFIED.

B) ASPHALTIC CONCRETE SHALL BE TYPE "B", 1/2" MAXIMUM, MEDIUM GRADED, AND INTIMATELY MIXED WITH 5-6.5(E ASPHALT PER CALTRANS STANDARD SPECIFICATIONS (2006) NO. R.A.P. (RECLAIMED ASPHALT PAVEMENT) SHALL BE USED. ASPHALT SHALL BE PERFORMANCE GRADE PG64-10.

11. SWANSON ENGINEERING SHALL NOT BE RESPONSIBLE OR LIABLE FOR UNAUTHORIZED CHANGES TO, OR USES OF, THESE PLANS. ALL CHANGES TO THESE PLANS MUST BE APPROVED, IN WRITING, BY SWANSON ENGINEERING.

12. ALL GRADING SHALL CONFORM TO THE RECOMMENDATIONS CONTAINED IN THE PRELIMINARY SOILS REPORT, MADE A PART HEREOF, PREPARED BY SOILS ENGINEERING, INC., FILE NO. 22-18353, DATED APRIL 22, 2022, TITLED "GEOTECHNICAL INVESTIGATION FOR THE NEW HIGHLAND HIGH SCHOOL SWIMMING POOL, 2900 ROYAL SCOTS WAY, IN BAKERSFIELD, CALIFORNIA", AND ALL ADDENDA THERETO. IN CASE OF A CONFLICT BETWEEN THE PLANS, SPECIFICATIONS, AND SOILS RECOMMENDATIONS, THE MORE STRINGENT REQUIREMENTS SHALL TAKE PRECEDENCE.

13. PRIOR TO COMMENCING CONSTRUCTION, CONTRACTOR SHALL POTHOLE ALL UTILITIES THAT WILL BE AFFECTED BY THIS CONSTRUCTION TO DETERMINE IF ANY UTILITY CONFLICTS EXIST. ANY UTILITY CONFLICTS SHALL BE BROUGHT TO THE ATTENTION OF THE ENGINEER SO THAT DESIGN CHANGES CAN BE MADE PRIOR TO THE START OF CONSTRUCTION.

14. UPON COMPLETION OF GRADING AND BEFORE THE START OF CONSTRUCTION, A FINAL SOILS REPORT SHALL BE PREPARED BY THE SOIL ENGINEER.

15. THE SOIL ENGINEER SHALL REVIEW ALL EXCAVATIONS PRIOR TO BACKFILLING AND SHALL BE NOTIFIED OF ANY ITEM ENCOUNTERED DURING THE GRADING OPERATIONS THAT MIGHT AFFECT FOUNDATION STABILITY SO THAT RECOMMENDATIONS CAN BE MADE BY THE SOIL ENGINEER.

16. CUT AND FILL SLOPES NEARER THAN FIVE FEET FROM THE BUILDING FOUNDATIONS SHALL NOT BE STEEPER THAN 5:1. CUT AND FILL SLOPES SHALL NOT BE STEEPER THAN 2:1 FOR SLOPES FARTHER THAN FIVE FEET FROM FOOTING LINES.

17. ALL SLOPES GREATER THAN THREE FEET IN VERTICAL HEIGHT SHALL BE PREPARED AND MAINTAINED TO PREVENT EROSION.

18. IMPORTED FILL MATERIAL SHOULD CONSIST OF ESSENTIALLY GRANULAR, SILTY SANDS WITH LOW EXPANSION POTENTIAL AND FREE OF GRASSES, WEEDS, ROCKS LARGER THAN TWO INCHES IN DIAMETER, DEBRIS, AND SOLUBLE SULFATES IN EXCESS OF 200 PARTS PER MILLION. IMPORTED FILL SHOULD CONTAIN SUFFICIENT SILT AND CLAY BINDER TO RENDER THEM STABLE IN FOOTING TRENCHES AND CAPABLE OF MAINTAINING SPECIFIED ELEVATION TOLERANCES DURING PAVING OPERATIONS. ANY EARTHEN MATERIALS PROPOSED TO BE BROUGHT ONTO SCHOOL SITES ARE SUBJECT TO TESTING TO VERIFY THEY ARE IN COMPLIANCE WITH DTSC STANDARDS. OWNER SHALL DETERMINE IF TESTING OF MATERIALS IS REQUIRED PRIOR TO ANY MATERIAL BEING BROUGHT ONTO THE SITE. TESTING OF MATERIALS MAY TAKE UP TO TWO WEEKS TO VERIFY COMPLIANCE WITH DTSC STANDARDS.

IMPORTED SOILS SHOULD ALSO MEET THE FOLLOWING CRITERIA:

A) MAXIMUM % PASSING #200 SIEVE 40
B) MAXIMUM % RETAINED 3" SIEVE 0
C) MAXIMUM % RETAINED 1-1/2" SIEVE FOR BUILDING AREAS . . . 15
D) MAXIMUM % RETAINED 3/4" SIEVE FOR LANDSCAPE AREAS . . . 5
E) MAXIMUM LIQUID LIMIT 40
F) MAXIMUM PLASTICITY INDEX 14
G) MINIMUM R-VALUE 50
H) MAXIMUM EXPANSION INDEX 20

19. CLEARING AND GRUBBING - REMOVE ALL DEBRIS, SUCH AS METAL, TRASH, BROKEN CONCRETE, VEGETATION, OTHER BIODEGRADABLE SUBSTANCES, AND UNSUITABLE SOIL FROM AREAS TO BE GRADED. UNSUITABLE SOIL IS SOIL THAT, IN THE OPINION OF THE BUILDING OFFICIAL, SOIL ENGINEER, OR CIVIL ENGINEER, IS NOT COMPETENT TO SUPPORT OTHER SOIL OR STRUCTURES, OR TO SATISFACTORILY PERFORM ANY OTHER FUNCTIONS FOR WHICH THE SOIL IS INTENDED.

20. AREAS TO RECEIVE FILL SHALL BE SCARIFIED SIX INCHES, OR AS RECOMMENDED IN THE SOIL REPORT, WHICHEVER IS GREATER, UNTIL THE SURFACE IS FREE FROM RUTS, HUMMOCKS OR OTHER UNEVEN FEATURES WHICH WOULD TEND TO PREVENT UNIFORM COMPACTION BY THE EQUIPMENT TO BE USED. MOISTEN AND COMPACT TO AT LEAST 90% OF THE MAXIMUM DENSITY PER ASTM D1557 UNLESS OTHERWISE SPECIFIED.

21. ENGINEERED FILL MATERIALS SHOULD BE PLACED IN THIN LAYERS (LESS THAN EIGHT INCHES UNCOMPACTED THICKNESS), BROUGHT TO NEAR THE OPTIMUM MOISTURE CONTENT OR TO A MOISTURE CONTENT COMMENSURATE WITH EFFECTIVE COMPACTION AND SOIL STABILITY, AND COMPACTED TO A MINIMUM OF 90 PERCENT OF THE MAXIMUM DENSITY OBTAINABLE BY ASTM TEST METHOD D1557.

22. QUANTITIES FOR EARTHWORK

EXCAVATION - 4,250 C.Y.
EMBANKMENT - 2,350 C.Y.

QUANTITIES ARE FOR GRADING PERMIT ONLY. THE ENGINEER MAKES NO WARRANTY OF THE ANTICIPATED SHRINKAGE FACTOR. THE CONTRACTOR SHALL NOT USE THESE QUANTITIES TO BASE HIS BID ON. THE GRADING PLAN DOES NOT NECESSARILY INDICATE A BALANCED SITE. CONTRACTOR SHALL BE RESPONSIBLE FOR IMPORTING MATERIALS FROM AN OFF-SITE LOCATION OR EXPORTING EXCESS MATERIAL TO AN OFF-SITE LOCATION, AS NEEDED.

23. CONTRACTOR TO VERIFY DIMENSIONS AND ELEVATIONS OF EXISTING IMPROVEMENTS IN THE FIELD BEFORE PROCEEDING WITH WORK. ANY DISCREPANCIES THAT WILL AFFECT TIE-INS TO EXISTING IMPROVEMENTS SHALL BE BROUGHT TO THE ATTENTION OF THE ENGINEER BEFORE PROCEEDING WITH ANY WORK.

24. PROPOSED STRUCTURE, POOL DECK AND POOL BOTTOM AREAS GROUND SURFACE PREPARATION:
A. EXCAVATE EARTH MATERIAL IN THE PROPOSED STRUCTURE AREA TO A MINIMUM DEPTH OF FOUR (4) FEET BELOW THE LOWEST GRADE IN EACH OF THE PROPOSED STRUCTURE AREAS OR TWO (2) FEET BELOW BOTTOM OF FOUNDATION, WHICHEVER IS DEEPER.
B. EXCAVATE EARTH MATERIAL IN THE PROPOSED POOL DECK AREA TO A MINIMUM DEPTH OF TWO (2) FEET BELOW EXISTING GRADE OR ONE (1) FOOT BELOW BOTTOM OF THE CONCRETE POOL DECK, WHICHEVER IS DEEPER.
C. EXCAVATE EARTH MATERIAL IN THE PROPOSED POOL BOTTOM AREA TO A MINIMUM DEPTH OF TWO (2) FEET BELOW.
D. THE BOTTOM OF THE EXCAVATION SHALL BE REVIEWED BY THE SOIL ENGINEER OR HIS REPRESENTATIVE PRIOR TO ANY BACKFILL OPERATIONS.
E. THE TOP TWELVE INCHES OF MATERIALS EXPOSED AT THE BOTTOM OF THE EXCAVATION SHALL BE SCARIFIED AND COMPACTED TO A MINIMUM OF 90 PERCENT OF ASTM D1557.
F. MOISTEN IMPORTED SOILS TO NEAR THE OPTIMUM MOISTURE OR TO A MOISTURE CONTENT CONSISTENT WITH EFFECTIVE COMPACTION AND SOILS STABILITY. COMPACT MOISTENED SOILS TO A MINIMUM OF 90 PERCENT OF THE MAXIMUM DENSITY OBTAINED BY ASTM TEST METHOD D1557.
G. WORK TO LINES AT LEAST FIVE (5) FEET BEYOND THE OUTSIDE EDGES OF EXTERIOR FOOTINGS AND AT LEAST TWO (2) FEET BEYOND POOL DECK AND POOL BOTTOM EDGES.

25. PAVEMENT AND FLATWORK AREA PREPARATION: GROUND SURFACES TO RECEIVE CONCRETE DRIVEWAY AND BITUMINOUS PAVEMENTS SHOULD BE SCARIFIED AND COMPACTED TO A MINIMUM DEPTH OF 12 INCHES BELOW THE GRADING PLANE IN CUT AREAS OR TO 12 INCHES IN AREAS TO RECEIVE FILL. ENGINEERED FILL PLACED IN PROPOSED PAVEMENT AREAS SHOULD BE COMPACTED TO A MINIMUM OF 90 PERCENT OF THE MAXIMUM DENSITY AS OBTAINED BY ASTM TEST METHOD D1557, AND SHOULD EXTEND TO A MINIMUM OF TWO FEET BEYOND THE OUTSIDE EDGES OF PAVEMENT.

26. ALL TRENCHES AND EXCAVATIONS SHALL BE CONSTRUCTED IN STRICT COMPLIANCE WITH THE APPLICABLE CALIFORNIA AND FEDERAL O.S.H.A. REQUIREMENTS AND OTHER APPLICABLE SAFETY ORDINANCES. CONTRACTOR SHALL BEAR FULL RESPONSIBILITY FOR TRENCH SHORING DESIGN AND INSTALLATION. CONTRACTORS SHALL OBTAIN APPLICABLE O.S.H.A. PERMITS WHEN WORKMEN MUST ENTER TRENCHES GREATER THAN FIVE FEET.

27. MAXIMUM SLOPE RATIO FROM BACK OF SIDEWALK TO FACE OF WALL OR STRUCTURE SHALL BE 4:1, EXCEPT FOR TWO FEET BEHIND THE SIDEWALK WHERE THE MAXIMUM SLOPE SHALL BE 2%. ALTERNATIVELY, THE CITY ENGINEER MAY APPROVE CURBING BEHIND THE SIDEWALK OR OTHER METHOD TO PREVENT EROSION ONTO THE SIDEWALK.

28. AN OPEN STREET PERMIT SHALL BE OBTAINED FROM THE CITY OF BAKERSFIELD PUBLIC WORKS DEPARTMENT FOR ANY WORK PERFORMED WITHIN EXISTING ACCEPTED STREET RIGHT OF WAY. UNLESS SECURED BY A SUBDIVISION AGREEMENT, SECURITY BASED ON AN APPROVED ENGINEER'S ESTIMATE FOR THE WORK PERFORMED WITHIN RIGHT OF WAY AND INSURANCE AS REQUIRED SHALL BE PROVIDED PRIOR TO ISSUANCE OF A PERMIT.

29. IF THE PROJECT IS SUBJECT TO THE PROVISIONS OF THE NATIONAL POLLUTANT DISCHARGE ELIMINATION SYSTEM (NPDES), A "NOTICE OF INTENT" (NOI) TO COMPLY WITH THE TERMS OF THE GENERAL PERMIT TO DISCHARGE STORM WATER ASSOCIATED WITH CONSTRUCTION ACTIVITY (WQ ORDER NO. 2009-009-DWQ AS AMENDED BY ORDER 2010-0014-DWQ AND ORDER 2012-0006-DWQ) MUST BE FILED WITH STATE WATER RESOURCES CONTROL BOARD IN SACRAMENTO BEFORE THE BEGINNING OF ANY CONSTRUCTION ACTIVITY. COMPLIANCE WITH THE GENERAL PERMIT REQUIRES THAT A STORM WATER POLLUTION PREVENTION PLAN (SWPPP) BE PREPARED, CONTINUOUSLY CARRIED OUT, AND ALWAYS BE AVAILABLE FOR PUBLIC INSPECTION DURING NORMAL CONSTRUCTION HOURS. WASTE DISCHARGE IDENTIFICATION (WDID) NUMBER _____ HAS BEEN ISSUED BY THE STATE WATER RESOURCES BOARD FOR THIS PROJECT.

30. 24 HOUR NOTICE: PRIOR TO THE START OF ANY PHASE OF CONSTRUCTION, THE CITY CONSTRUCTION INSPECTION SECTION SHALL BE GIVEN AT LEAST 24 HOUR NOTICE. THE SECTION MAY BE NOTIFIED AT (661) 326-3049.

31. COMPACTION TEST NOTE - COMPACTION TESTS SHALL BE THE RESPONSIBILITY OF THE DEVELOPER/SUBDIVIDER/CONTRACTOR. THE NUMBER AND LOCATION OF REQUIRED TESTS SHALL BE DETERMINED BY THE CITY ENGINEER.

32. ANY PUBLIC FACILITIES IN THE STREET RIGHT-OF-WAY WITHIN THE PROPERTY FRONTAGE WHICH ARE SUBSTANDARD OR DAMAGED WILL REQUIRE RECONSTRUCTION OR REPAIR AS DETERMINED BY THE CITY ENGINEER.

33. UNDERGROUND SERVICE ALERT SHALL BE CONTACTED TWO (2) WORKING DAYS PRIOR TO CONSTRUCTION (811).

IDENTIFICATION STAMP
DIV. OF THE STATE ARCHITECT
APP: 03-122664 INC:
REVIEWED FOR
SS ☑ FLS ☑ ACS ☑
DATE: 05/12/2023

pjhm architects

LICENSED ARCHITECT
RICHARD W. ROBERTS
REN. 02/25
STATE OF CALIFORNIA

SWANSON ENGINEERING, INC.
2000 F STREET, BAKERSFIELD, CA 93301
(661) 633-4848 FAX: (661) 633-4779
CIVIL STRUCTURAL MGMT
CERT. 22-053

REGISTERED PROFESSIONAL ENGINEER
ROBERT T. SWANSON
No. 43032
EXP. 3-31-24
STATE OF CALIFORNIA

HIGHLAND HIGH SCHOOL
50M POOL & AQUATICS CENTER
KERN HIGH SCHOOL DISTRICT

GRADING NOTES & DETAILS

C-5

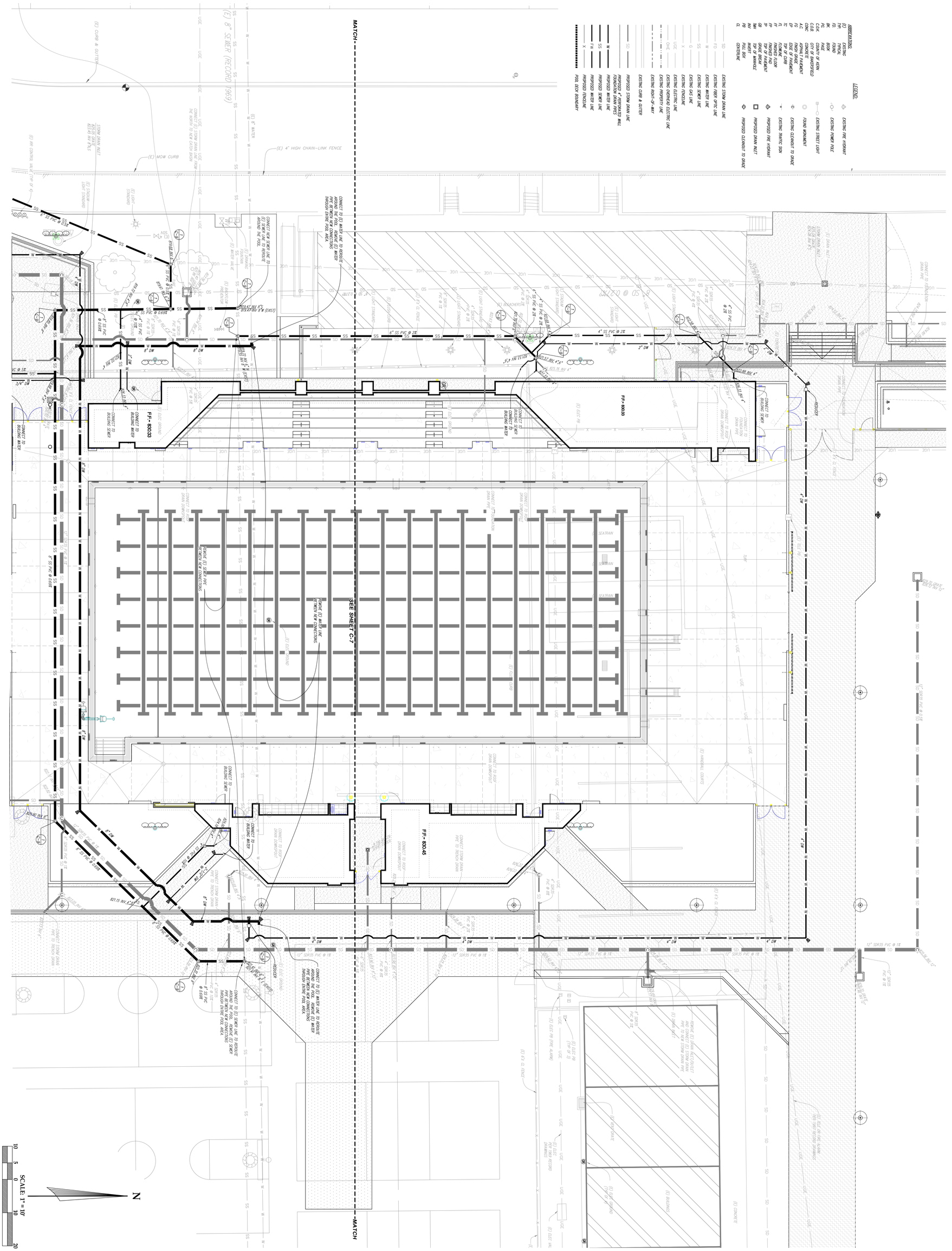

C-6

SITE UTILITY PLAN - NORTH

HIGHLAND HIGH SCHOOL
50M POOL & AQUATICS CENTER

KERN HIGH SCHOOL DISTRICT

SWANSON ENGINEERING, INC.
2000 Oak Street, Suite 150 ~ Bakersfield, CA 93301
p:(661) 831-4915 f:(661) 873-4777
JOB# 22-053 MCV

pjhm architects

IDENTIFICATION STAMP
DIV. OF THE STATE ARCHITECT
APP: 03-122664 INC:
SS ☑ REVIEWED FOR
FLS ☑ ACS ☑
DATE: 05/12/2023

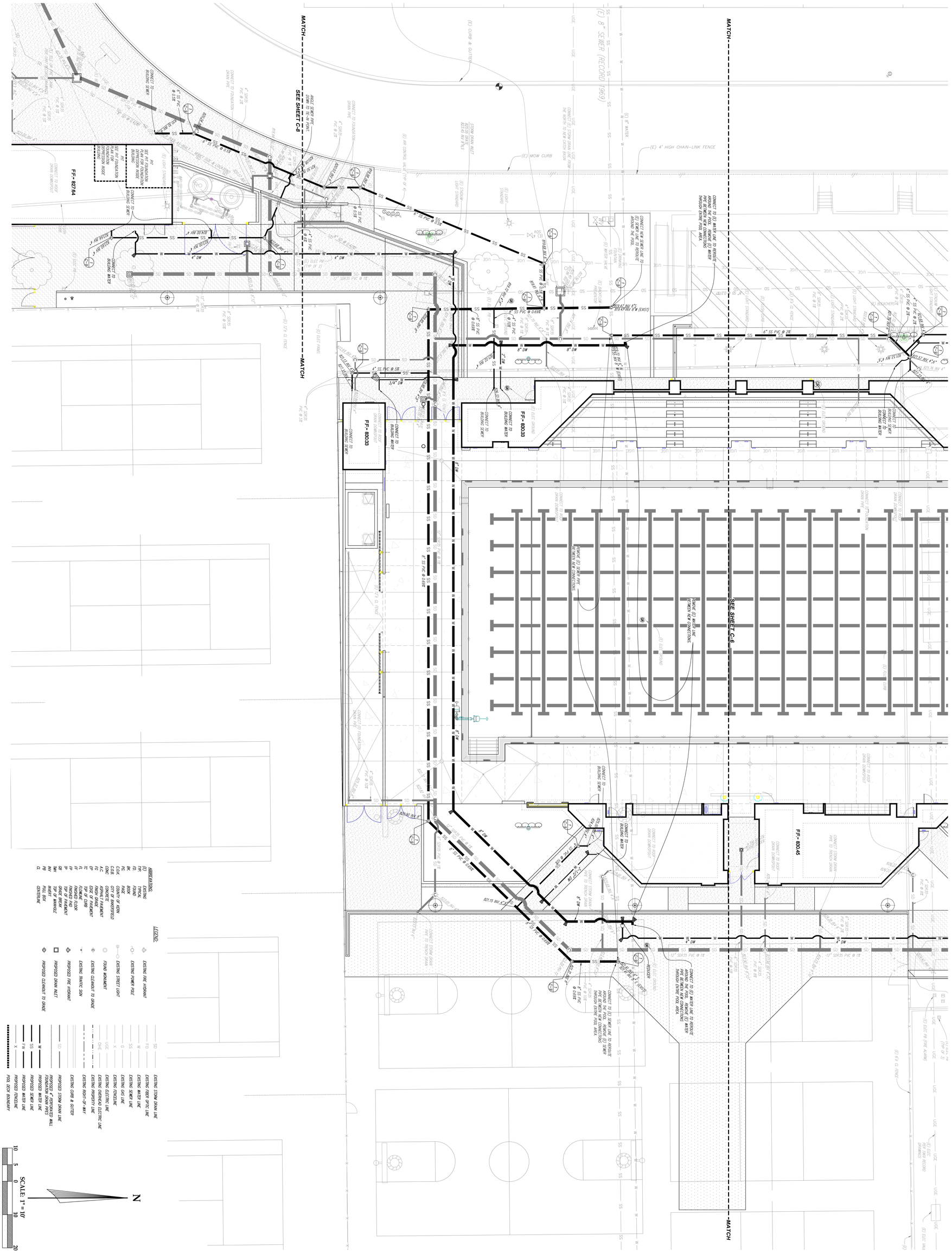

SITE UTILITY PLAN - CENTRAL

C-7

HIGHLAND HIGH SCHOOL
50M POOL & AQUATICS CENTER

KERN HIGH SCHOOL DISTRICT

SWANSON ENGINEERING, INC.
2000 Oak Street, Suite 150 ~ Bakersfield, CA 93301
p:(661) 831-4919; f:(661) 873-4777
JOB#- 22-053 MCN

pjhm architects

IDENTIFICATION STAMP
DIV. OF THE STATE ARCHITECT
APP: 03-122664 INC:
SS ☑ REVIEWED FOR
FLS ☑ ACS ☑
DATE: 05/12/2023

SITE UTILITY PLAN - SOUTH

C-8

HIGHLAND HIGH SCHOOL
50M POOL & AQUATICS CENTER

KERN HIGH SCHOOL DISTRICT

SWANSON ENGINEERING, INC.
2000 Oak Street, Suite 150 ~ Bakersfield, CA 93301
p:(661) 831-4919; f:(661) 873-4777
JOB#- 22-053 MCV

pjhm architects

IDENTIFICATION STAMP
DIV. OF THE STATE ARCHITECT
APP: 03-122864 INC:
SS ☑ REVIEWED FOR
FLS ☑ ACS ☑
DATE 05/12/2023

SCALE: 1" = 10'

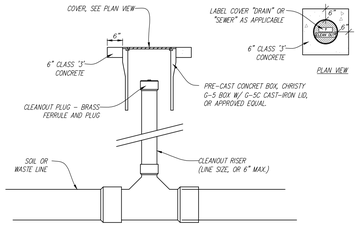

1 C-9 2-WAY CLEANOUT TO GRADE

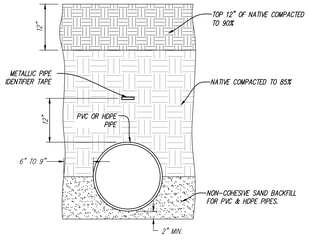

2 C-9 PVC/HDPE TRENCH DETAIL

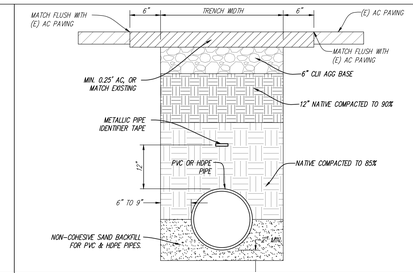

3 C-9 ON-SITE TRENCH W/ PAVEMENT PATCH


CROSS


TEE

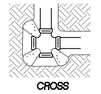
CROSS


TEE


90° ELL


22.5° ELL


REDUCER

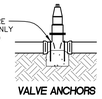

VALVE ANCHORS

THRUST BLOCK SCHEDULE

BEARING AREA IN SQ. FT.

PIPE SIZE	TEE OR PLUG	90° ELL OR HYDRANT	45° ELL	22-1/2° ELL
6"	2.8	4.0	2.2	1.1
8"	5.0	7.1	3.8	2.0
10"	7.9	11.1	6.0	3.1
12"	11.3	16.0	8.7	4.4

NOTES:

1. ALL THRUST BLOCKS SHALL BE POURED AGAINST UNDISTURBED SOIL. CONCRETE SHALL BE PLACED BEHIND BELL OF FITTING.
2. BEARING AREAS SHOWN IN TABLE ARE BASED ON ALLOWABLE SOIL PRESSURE OF 1500 psf.
3. KEEP CONCRETE AWAY FROM BELLS.

4 C-9 TYPICAL THRUST BLOCK DETAIL

IDENTIFICATION STAMP
DIV. OF THE STATE ARCHITECT
APP: 03-122664 INC:
REVIEWED FOR
SS ☑ FLS ☑ ACS ☑
DATE: 05/12/2023

pjhm architects

LICENSED ARCHITECT
RICHARD W. RIDDELL
No. C15385
REN. 02/25
STATE OF CALIFORNIA

SWANSON ENGINEERING, INC.
2000 S. Plaza Drive, Suite 150 • Santa Maria, CA 93454
ph (805) 823-4795 • (805) 823-4797 fax
CPE# 22-053

REGISTERED PROFESSIONAL ENGINEER
ROBERT T. SWANSON
No. 43032
EXP. 3-31-24
STATE OF CALIFORNIA

WATER NOTES:

1. ALL IMPROVEMENTS SHALL BE IN ACCORDANCE WITH THE CITY OF BAKERSFIELD WATER RESOURCES DEPARTMENT CURRENT STANDARDS AND SPECIFICATIONS FOR DOMESTIC WATER SYSTEMS.

2. CONNECTION TO THE CITY OF BAKERSFIELD WATER SYSTEM SHALL NOT BE ALLOWED AND INSPECTIONS WILL NOT OCCUR WITHOUT VERIFICATION OF PAYMENT OF ALL ASSOCIATED WATER AVAILABILITY FEES, INSPECTION/METER SET FEES, AND APPROVAL OF WATER PLANS BY THE WATER RESOURCES DEPARTMENT.

3. BACKFILL AND COMPACTION OF TRENCHES SHALL BE IN ACCORDANCE WITH THE CITY OF BAKERSFIELD STD. DWG. W-1 AND ST-12, EXCEPT AS NOTED ON THE PLANS.

4. WATERLINE TRENCHES SHALL NOT BE SHARED WITH ANY OTHER UTILITY. THIS REQUIREMENT SHALL BE CLEARLY INDICATED ON THE WATER AND UTILITY PLANS FOR THE DEVELOPMENT.

5. CONTRACTOR SHALL VERIFY, BY POTHOLING, THE EXACT LOCATION OF ALL CONNECTION POINTS AND ALL OTHER UTILITIES OR APPURTENANCES THAT MAY POTENTIALLY INTERFERE WITH INSTALLATION OF WATER IMPROVEMENTS PRIOR TO PERFORMING ANY WORK.

6. CONTRACTOR SHALL CONTACT UNDERGROUND SERVICE ALERT (811) AT LEAST TWO (2) WORKING DAYS PRIOR TO CONSTRUCTION, 1-800-227-2600.

7. CONTRACTOR SHALL NOTIFY CALIFORNIA WATER SERVICE COMPANY, AS AGENT OF INSPECTION FOR THE CITY OF BAKERSFIELD, AT LEAST FORTY-EIGHT (48) HOURS PRIOR TO START OF CONSTRUCTION, 661-637-7200.

8. CONTRACTOR SHALL ENSURE THAT ALL FIRE HYDRANTS ARE NOT PLACED WITHIN FIVE FEET OF ANY EXISTING OR PROPOSED WALLS, FENCES, STREET LIGHTS, AND LANDSCAPING OR ANY OTHER OBSTRUCTIONS.

9. ANY EXISTING OR PROPOSED TREE SHALL HAVE A MINIMUM OF FIVE FOOT (5') HORIZONTAL CLEARANCE FROM ANY WATER MAINLINE.

10. CONTRACTOR SHALL INSTALL WHARF HYDRANTS AT PHASE BOUNDARIES IF ADJOINING PHASES ARE NOT YET CONSTRUCTED. UPON EXTENSION OF WATER LINE, WHARF HYDRANTS SHALL BE REMOVED AND RELOCATED TO THE NEXT PHASE BOUNDARY.

11. CONTRACTOR IS RESPONSIBLE TO INSTALL METER BOXES. CITY OF BAKERSFIELD WILL INSTALL METERS THROUGH REQUEST OF OWNER/CONTRACTOR.

12. ALL EXISTING WATER VALVES SHALL BE OPERATED SOLELY BY AUTHORIZED CITY OF BAKERSFIELD WATER DEPARTMENT PERSONNEL OR ITS REPRESENTATIVE AGENTS.

SEWER NOTES:

GENERAL

1. CONTRACTOR WILL FURNISH ALL MATERIALS, TOOLS, LABOR, EQUIPMENT, AND SUPERVISION NECESSARY TO COMPLETE INSTALLATION.

PVC PIPE

1. MATERIALS – PIPE AND FITTINGS SHALL MEET THE REQUIREMENTS OF THE CURRENT ASTM SPECIFICATION D-3034 FOR SDR35 PVC. PIPE AND FITTINGS SHALL BE HOMOGENEOUS THROUGHOUT AND FREE FROM CRACKS, HOLES, FOREIGN INCLUSIONS, OR OTHER INJURIOUS DEFECTS.

2. JOINTS – USE ONLY ELASTOMERIC GASKET JOINTS. THE ASSEMBLY OF JOINTS SHALL BE IN ACCORDANCE WITH THE MANUFACTURER'S RECOMMENDATIONS. WHERE PVC PIPE CONNECTS TO VCP PIPE, USE ONLY COUPLINGS APPROVED BY THE CITY OF BAKERSFIELD.

3. INSTALLATION – PIPE AND FITTINGS SHALL BE INSTALLED IN ACCORDANCE WITH THE CURRENT ASTM SPECIFICATION D-2321. ONLY CLASS I AND II EMBEDMENT MATERIALS WILL BE CONSIDERED SUITABLE.

SYSTEM TESTING

1. A PRESSURE TEST SHALL BE PERFORMED ON INSTALLED PIPE IN ACCORDANCE WITH THE CITY OF BAKERSFIELD SUBDIVISION DESIGN MANUAL AND THE RECOMMENDATIONS OF THE MANUFACTURER.

MISCELLANEOUS

1. WYE FITTINGS SHALL BE INJECTION MOLDED IN-LINE TYPE AND SHALL BE USED FOR ALL LATERAL CONNECTIONS.

2. ALL SEWER STUBS SHALL BE CLOSED WITH A STANDARD PLASTIC PLUG, SOLVENT WELDED.

3. WATER JETTING AND FLOODING SHALL NOT BE USED FOR BACKFILL COMPACTION.

4. UNDERGROUND SERVICE ALERT (USA) SHALL BE NOTIFIED AT LEAST 2 WORKING DAYS BEFORE CONSTRUCTION. TELEPHONE (1-800-642-2444)

5. CONTRACTOR TO CALL FOR USA LOCATE AND POTHOLE ALL MARKED UTILITIES THAT CROSS OR ARE WITHIN 5' HORIZONTAL DISTANCE OF SEWER AND STORM DRAIN LINES. VERTICAL AND HORIZONTAL LOCATION SHALL BE ASCERTAINED BY THE CONTRACTOR AHEAD OF ANY EXCAVATIONS TO VERIFY THAT THE PROPOSED DESIGN DOES NOT CONFLICT WITH ANY UTILITIES. IN THE EVENT A CONFLICT EXISTS THE ENGINEER SHALL BE NOTIFIED IN ORDER TO REDESIGN THE ALIGNMENT. IF RELOCATION OF EXISTING UTILITIES IS DEEMED NECESSARY, THE CONTRACTOR SHALL BE COMPENSATED FOR INSTRUCTED RELOCATION. IF REDESIGN OF THE ALIGNMENT REQUIRES ADDITIONAL FITTINGS, PIPE, OR EXCAVATION THE CONTRACTOR SHALL BE COMPENSATED FOR REVISION. IN THE EVENT A UTILITY IS DAMAGED, THE CONTRACTOR SHALL BE WHOLLY RESPONSIBLE FOR ITS REPAIR.

6. CONTRACTOR SHALL VERIFY LOCATIONS AND ELEVATIONS OF EXISTING SEWER AND STORM DRAIN LINES THAT THE NEW SYSTEM TIES INTO PRIOR TO TRENCHING. ANY DISCREPANCIES SHALL BE REPORTED TO THE ENGINEER SO THAT ANY NECESSARY ADJUSTMENTS MAY BE MADE. UTILITIES SHALL BE THOROUGHLY RESEARCHED AND LOCATED BY THE CONTRACTOR PRIOR TO TRENCHING. CROSSING UTILITIES SHALL BE DAYLIGHTED AND CHECKED FOR GRADE BY THE CONTRACTOR PRIOR TO TRENCHING.

HIGHLAND HIGH SCHOOL
50M POOL & AQUATICS CENTER

KERN HIGH SCHOOL DISTRICT

SITE UTILITY NOTES & DETAILS

C-9

OC Office: 24461 Ridge Route Drive #100, Laguna Hills, CA 92653 • OC Phone: 949.496.6191 • SD Office: 804 Pier View Way #103, Oceanside, CA 92054 • SD Phone: 760.730.5527 • LA Office: 837 Traction Avenue, #410, Los Angeles, CA 90013 • LA Phone: 213.278.0172 • Web: pjhm.com

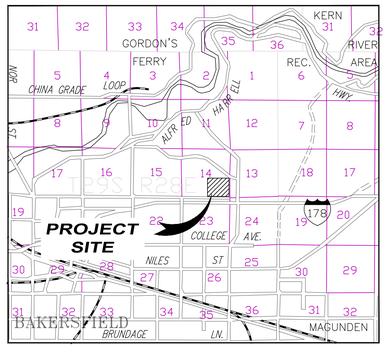

VICINITY MAP
N.T.S.

BENCHMARK

TOP OF CAP ON CITY OF BAKERSFIELD CONCRETE MONUMENT IN LAMPHOLE AT THE CENTERLINE INTERSECTION OF AUBURN STREET AND PIPER WAY PER CITY OF BAKERSFIELD BENCH MARK BOOK.

ELEVATION = 804.26'

BASIS OF BEARINGS

THE BEARING OF N89°17'26"E SHOWN FOR THE SOUTH LINE OF THE SOUTHEAST QUARTER OF SECTION 14, T.29S., R.28E., M.D.M. ON RECORD OF SURVEY, R.S. BOOK 9, PAGE 91, WAS USED AS THE BASIS OF BEARINGS HEREON.

LEGAL DESCRIPTION

BEING A PORTION OF THE SOUTHEAST QUARTER OF SECTION 14, T.29S., R.28E., M.D.B.M.

ADDRESS

2900 ROYAL SCOTS WAY

APN

146-020-23

UTILITY NOTE

NOT ALL UTILITIES WERE LOCATED BY THIS SURVEY AND SWANSON ENGINEERING, INC. ASSUMES NO RESPONSIBILITY FOR UNDERGROUND UTILITIES OR FACILITIES NOT SHOWN OR FOR INFORMATION OBTAINED FROM OUTSIDE SOURCES.

LEGEND

- 15 — FURNISH AND INSTALL TRAFFIC SIGNS, 15MPH
- SILT FENCE OR FIBER ROLL PER CASQA DETAIL SE-1 OR SE-5
- 4' HIGH PLASTIC MESH ORANGE CONSTRUCTION SAFETY BARRIER FENCE
- FIRE HYDRANT
- WRAP GRATE W/ NON-WOVEN SILT FABRIC. SEE DETAILS 1, 2, AND 3 ON SHEET C-11.
- SANDBAGS
- 30'x50' GRAVEL ENTRY WITH GRIZZLY PER CASQA DETAIL TC-1. 3" ROCK SIZE.

BMP NOTES:

1. NON-STORM WATER DISCHARGES ARE PROHIBITED FROM ENTERING ANY STORM DRAIN SYSTEM
2. POLLUTANTS SHALL BE REMOVED FROM STORM WATER DISCHARGES TO THE MAXIMUM EXTENT PRACTICAL.
3. PORTABLE SANITARY FACILITIES SHALL BE LOCATED ON RELATIVELY LEVEL GROUND AWAY FROM TRAFFIC AREAS, DRAINAGE COURSES, AND STORM DRAIN INLETS.
4. EMPLOYEES, SUBCONTRACTORS AND SUPPLIERS SHALL BE EDUCATED ON ALL BMPS, INCLUDING CONCRETE WASTE STORAGE AND DISPOSAL PROCEDURES.
5. SEDIMENT CONTROL PRACTICES SHALL EFFECTIVELY PREVENT A NET INCREASE OF SEDIMENT LOAD IN STORM WATER DISCHARGE.
6. WATER SITE IN COMPLIANCE W/ CASQA WE-1.
7. SWEEP STREET DAILY IN COMPLIANCE W/ CASQA SE-7.
8. ALL STORM DRAIN GRATES ARE TO BE WRAPPED WITH NON-WOVEN SILT FABRIC TO PREVENT SILT ENTRY INTO THE DRAINAGE SYSTEM
9. ALL STORM DRAIN FILTER FABRICS ARE REQUIRED TO STAY IN PLACE UNTIL THE AREA DRAINING TO SAID STORM DRAIN INLET IS COMPLETELY STABILIZED (PAVEMENT OR LANDSCAPE HAS BEEN INSTALLED)
10. CONSULT WITH SWPPP INSPECTOR AND/OR THE QSP BEFORE MAKING PERMANENT ADJUSTMENTS TO BMPS

IDENTIFICATION STAMP
DIV. OF THE STATE ARCHITECT
APP: 03-122664 INC:
REVIEWED FOR
SS ☑ FLS ☑ ACS ☑
DATE: 05/12/2023

pjhm architects

LICENSED ARCHITECT
HOWARD W. ROBINSON
No. C15585
REN. 02/25
STATE OF CALIFORNIA

SWANSON ENGINEERING, INC.
2000 S. Hacienda Blvd. #130 • Hacienda Heights, CA 91745
ph (661) 833-4816 • (661) 873-4779 fax
CSW# 22-053

REGISTERED PROFESSIONAL ENGINEER
ROBERT T. SWANSON
No. 43032
EXP. 3-31-24
STATE OF CALIFORNIA

HIGHLAND HIGH SCHOOL
50M POOL & AQUATICS CENTER

KERN HIGH SCHOOL DISTRICT

B.M.P. PLAN

C-10

OC Office: 24461 Ridge Route Drive #100, Laguna Hills, CA 92653 • SD Phone: 760.730.5527 • OC Phone: 949.496.6191 • SD Office: 804 Pier View Way #103, Oceanside, CA 92054 • LA Office: 837 Traction Avenue, #410, Los Angeles, CA 90013 • LA Phone: 213.278.0172 • Web: pjhm.com

KERN COUNTY
ENGINEERING AND SURVEY SERVICES DEPARTMENT
BEST MANAGEMENT PRACTICES (BMP's)
INSTRUCTIONS

The following BMP's are examples only and may or may not be applicable to a specific project. It is the engineer's responsibility to develop a Storm Water Pollution Prevention Plan (SWPPP) and incorporate all appropriate BMP's into the project plans and specifications to effectively control erosion and sediment during construction.

The placement of devices to control erosion and sediment shall be clearly shown on the plans. They shall be modified as necessary during the course of construction, and the SWPPP shall be updated accordingly.

The contractor must implement an effective combination of erosion and sediment control on all disturbed areas during the rainy season.

Sediment control BMP's are required at appropriate locations along the site perimeter and at all operational internal inlets to a storm drain system at all times during the rainy season. Non-stormwater discharges may enter a new storm drain system that is not yet accepted by the County and is not connected to an existing County system. All sediments shall be removed from the storm drain system prior to acceptance by the County.

After a rainstorm, all silt and debris shall be removed from check barms, desilting basins, and other devices. Any devices and slope surface protection damaged during a rainstorm shall be immediately repaired.

All removable protective devices shall be in place at the end of each working day when the five-day rain probability forecast exceeds forty percent. (KCB)

The "Applicability of NPDES Storm Water Program for a Project Disturbing One (1) Acre or Greater Within Kern County" form must be completed and shall be submitted with the permit application. The form shall be signed by the owner and engineer and shall also indicate an emergency contact person.

Revisions Date Desc	DATE 06/19/2003 DESIGNED BY: DRAWN BY: CHECKED BY:	COUNTY OF KERN STATE OF CALIFORNIA DEVELOPMENT STANDARD	NPDES BMP SEDIMENTS AND EROSION CONTROL	PLATE NO. BMP INS

G:\EXCHANGE\IPC\dan\NPDES BMPS\SWPPP1.dwg, BMP INSTRUCTION, 6/26/2003 5:13:10 PM

BEST MANAGEMENT PRACTICES (BMP's)

General Notes

1. Best Management Practices (BMP's) contained herein reflect minimum requirements. Alternate methods providing equal or greater protection may be utilized. For additional BMP's refer to California Stormwater BMP Handbooks, available at WWW.CABMPHANDBOOKS.COM.
2. All construction activity shall be performed in accordance with a Stormwater Pollution Prevention Plan (SWPPP) developed and implemented in compliance with requirements of the Kern County Stormwater Management Program, National Pollutant Discharge Elimination System (NPDES) Permit, and the State's General Permit.
3. The SWPPP shall:
   a. Identify potential pollutant sources and include the design and placement of BMP's to effectively prohibit the entry of pollutants from the construction site into and onto the street and storm drain system during construction.
   b. Be kept on site and amended to reflect changing conditions throughout the course of construction.
   c. Be kept up to date. Any additional updates requested by agency representative are to be made immediately.
4. Non-Stormwater discharges are prohibited from entering any storm drain system and/or street.
5. Pollutants shall be prevented from stormwater discharges to the Maximum Extent Practicable (MEP) through design & implementation of the SWPPP.
6. A standby crew for emergency work shall be available at all times during the rainy season (Nov. 1 to Apr. 15). Necessary materials shall be available on site and stockpiled at convenient locations to facilitate rapid construction of temporary devices or damaged erosion control measures or sediment control measures when rain is imminent.
7. Portable sanitary facilities shall be located on relatively level ground away from traffic areas, drainage courses, and storm drain inlets.
8. Employees, subcontractors and suppliers shall be educated on all BMP's including concrete waste storage and disposal procedures.
9. Sediment control practices shall effectively prevent a net increase of sediment load in stormwater discharge.

Revisions Date Desc	DATE 06/19/2003 DESIGNED BY: DRAWN BY: CHECKED BY:	COUNTY OF KERN STATE OF CALIFORNIA DEVELOPMENT STANDARD	NPDES BMP SEDIMENTS AND EROSION CONTROL	PLATE NO. BMP 1

G:\EXCHANGE\IPC\dan\NPDES BMPS\SWPPP1.dwg, BMP 1, 7/10/2003 8:55:56 AM

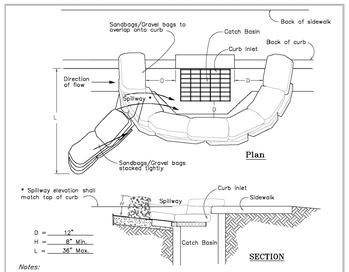

Notes:
1. Catch Basin/Inlet protection shall be installed wherever there is a potential of stormwater or non-stormwater being discharged into it.
2. Inlet protection is required along with other pollution prevention measures such as; erosion control, soil stabilization, and measures to prevent tracking onto paved surfaces.
3. Modify inlet protection as needed to avoid creating traffic hazards.
4. Include inlet protection measures at hillside v-ditches and misc. drainage swales.
5. Inlet protection shall be inspected and accumulated sediments removed. Sediment shall be disposed of properly and in a manner that assures that the sediment does not enter the storm drain system.
6. Damaged bags shall be replaced immediately.
7. Additional sandbag sediment traps shall be placed at intervals as indicated on site plan.

A CATCH BASIN/INLET PROTECTION

Revisions Date Desc	DATE 06/19/2003 DESIGNED BY: DRAWN BY: CHECKED BY:	COUNTY OF KERN STATE OF CALIFORNIA DEVELOPMENT STANDARD	NPDES BMP SEDIMENTS AND EROSION CONTROL	PLATE NO. BMP A

G:\EXCHANGE\IPC\dan\NPDES BMPS\SWPPP1.dwg, BMP A, 6/25/2003 10:34:26 AM

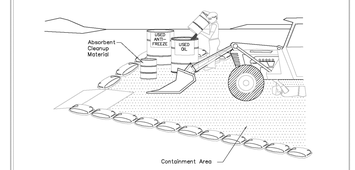

Notes:
1. Leaking vehicles and equipment shall not be allowed on-site. Equipment and vehicles shall be inspected frequently for leaks and shall be repaired immediately. Clean up spills and leaks promptly with absorbent materials; do not flush with water.
2. Vehicles and equipment shall be maintained, and repaired on-site only in designated areas. Prevent run-on and run-off from designated areas. Containment devices shall be provided and areas shall be covered if necessary.
3. Designate on-site vehicle and equipment maintenance areas, away from storm drain inlets and watercourses.
4. Always use secondary containment, such as a drain pan or drop cloth, to catch spills and leaks when removing or changing fluids.
5. Legally dispose of used oils, fluids, and lubricants.
6. Provide spill containment dikes or secondary containment around stored oil, fuel, and chemical drums.
7. Maintain an adequate supply of absorbent spill cleanup materials in designated area.

B EQUIPMENT MAINTENANCE AREAS

Revisions Date Desc	DATE 06/19/2003 DESIGNED BY: DRAWN BY: CHECKED BY:	COUNTY OF KERN STATE OF CALIFORNIA DEVELOPMENT STANDARD	NPDES BMP SEDIMENTS AND EROSION CONTROL	PLATE NO. BMP B

G:\EXCHANGE\IPC\dan\NPDES BMPS\SWPPP1.dwg, BMP B, 6/25/2003 10:35:11 AM

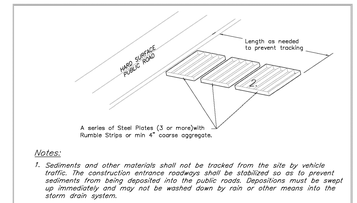

Notes:
1. Sediments and other materials shall not be tracked from the site by vehicle traffic. The construction entrance roadways shall be stabilized so as to prevent sediments from being deposited into the public roads. Depositions must be swept up immediately and may not be washed down by rain or other means into the storm drain system.
2. Stabilized construction entrance shall be:
   a. Located at any point where traffic will be entering or leaving a construction site to or from a public right of way, street, alley, and sidewalk or parking area.
   b. A series of steel plates with "rumble strips", and/or min 4" coarse aggregate with length, width & thickness as needed to adequatly prevent any tracking onto paved surfaces.
3. Adding a wash rack with a sediment trap large enough to collect all wash water can greatly improve efficiency.
4. All vehicles accessing the construction site shall utilize the stabilized construction entrance sites.
   1. Remove all sediment deposited on paved roadways immediately.
   2. Sweep paved areas that receive construction traffic whenever sediment becomes visible.
   3. Pavement washing with water is prohibited if it results in a discharge to the storm drain system.

C STABLIZED CONSTRUCTION ENTRANCE

Revisions Date Desc	DATE 06/19/2003 DESIGNED BY: DRAWN BY: CHECKED BY:	COUNTY OF KERN STATE OF CALIFORNIA DEVELOPMENT STANDARD	NPDES BMP SEDIMENTS AND EROSION CONTROL	PLATE NO. BMP C

G:\EXCHANGE\IPC\dan\NPDES BMPS\SWPPP1.dwg, BMP C, 6/25/2003 10:36:03 AM

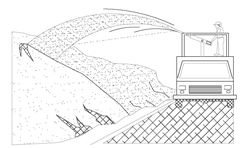

Notes:
1. Soil/Slope stabilization practices shall be designed to preserve existing vegetation where feasible and to revegetate open areas as soon as feasible after grading. These control practices shall include temporary seeding, permanent seeding, mulching, sod stabilization, vegetative buffer strips, protection of trees, or other soil stabilization practices.
2. Soil stabilization shall be implemented on all inactive disturbed areas from November 1 thru April 15 and on all disturbed areas during a rain event or potential rain.
3. Stabilization practices shall control/prevent erosion from the forces of wind and water.
4. Stabilization practices shall be implemented in conjunction with sediment trapping/filtering practices and practices to reduce the tracking of sediment onto paved roads.
5. When using straw mulching, the minimum application shall be 2 tons/acre. Mulch must be anchored immediately to minimize loss by wind or water.
6. When using hydroseeding/mulching, the minimum application of wood fiber shall be 1,500 lbs/acre, that does not contain more than 50 percent newsprint.
7. For seeding recommendations, contact: USDA, Natural Resources Conservation Service at 5000 California Avenue, Bakersfield, CA 93309-0725. Phone: (661) 336-0967.

D EROSION CONTROL

Revisions Date Desc	DATE 06/19/2003 DESIGNED BY: DRAWN BY: CHECKED BY:	COUNTY OF KERN STATE OF CALIFORNIA DEVELOPMENT STANDARD	NPDES BMP SEDIMENTS AND EROSION CONTROL	PLATE NO. BMP D

G:\EXCHANGE\IPC\dan\NPDES BMPS\SWPPP1.dwg, BMP D, 6/25/2003 10:36:31 AM

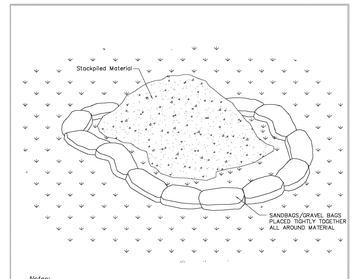

Notes:
1. Dirt and other construction related materials placed in the street or on other impervious surfaces must be contained with sandbags or other measures to prevent transport to the stormdrain system.
2. Any construction material stored on stockpiled on-site shall be protected from being transported by the force of wind or water.

E MATERIAL STORAGE

Revisions Date Desc	DATE 06/19/2003 DESIGNED BY: DRAWN BY: CHECKED BY:	COUNTY OF KERN STATE OF CALIFORNIA DEVELOPMENT STANDARD	NPDES BMP SEDIMENTS AND EROSION CONTROL	PLATE NO. BMP E

G:\EXCHANGE\IPC\dan\NPDES BMPS\SWPPP1.dwg, BMP E, 6/25/2003 10:37:04 AM

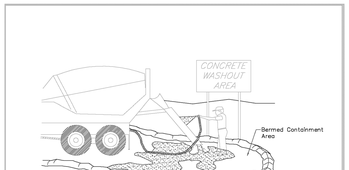

Notes:
1. Excess and waste concrete shall not be washed into the street or into a drainage system.
2. For washout of concrete and mortar products, a designated containment facility of sufficient capacity to retain liquid and solid waste shall be provided on site.
3. Slurry from concrete and asphalt saw cutting shall be vacuumed or contained, dried, picked up and disposed of properly.

F CONCRETE WASTE MANAGEMENT

Revisions Date Desc	DATE 06/19/2003 DESIGNED BY: DRAWN BY: CHECKED BY:	COUNTY OF KERN STATE OF CALIFORNIA DEVELOPMENT STANDARD	NPDES BMP SEDIMENTS AND EROSION CONTROL	PLATE NO. BMP F

G:\EXCHANGE\IPC\dan\NPDES BMPS\SWPPP1.dwg, BMP F, 6/25/2003 10:37:38 AM

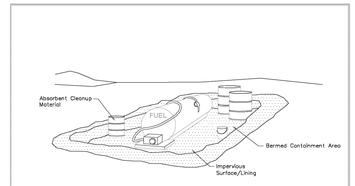

Notes:
1. Fueling shall be performed in a designated area, away from drainage courses.
2. Absorbent cleanup material shall be on site and used immediately in the event of a spill.

G VEHICLE/ EQUIPMENT FUELING

Revisions Date Desc	DATE 06/19/2003 DESIGNED BY: DRAWN BY: CHECKED BY:	COUNTY OF KERN STATE OF CALIFORNIA DEVELOPMENT STANDARD	NPDES BMP SEDIMENTS AND EROSION CONTROL	PLATE NO. BMP G

G:\EXCHANGE\IPC\dan\NPDES BMPS\SWPPP1.dwg, BMP G, 6/25/2003 11:49:53 AM

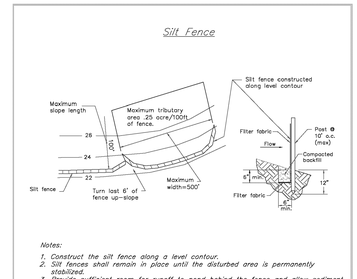

Notes:
1. Construct the silt fence along a level contour.
2. Silt fences shall remain in place until the disturbed area is permanently stabilized.
3. Provide sufficient room for runoff to pond behind the fence and allow sediment removal equipment to pass between the silt fence and toe of slope or other obstructions. About 1250 sq. ft. of ponding area shall be provided for every acre draining to the fence.
4. Turn the ends of the filter fence uphill to prevent stormwater from flowing around the fence.
5. Leave an undisturbed or stabilized area immediately downslope from the fence.
6. Do not place in live stream or intermittently flowing channels.
7. When standard filter fabric is used, a wire mesh support fence shall be fastened securely to the upslope side of the posts using heavy-duty wire staples at least 1 inch long, tie wires or hog rings.

H SILT FENCE

Revisions Date Desc	DATE 06/19/2003 DESIGNED BY: DRAWN BY: CHECKED BY:	COUNTY OF KERN STATE OF CALIFORNIA DEVELOPMENT STANDARD	NPDES BMP SEDIMENTS AND EROSION CONTROL	PLATE NO. BMP H

G:\EXCHANGE\IPC\dan\NPDES BMPS\SWPPP1.dwg, BMP H, 6/25/2003 10:38:34 AM

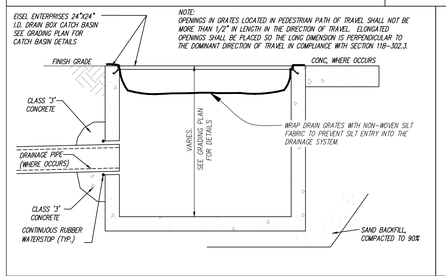

1 C-11 STORM DRAIN INLET PROTECTION

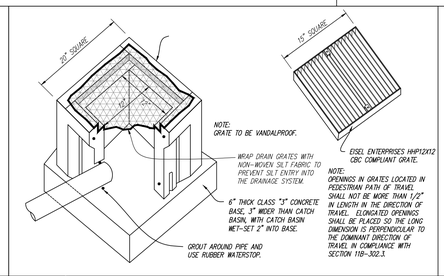

2 C-11 EISEL ENTERPRISES 12X12 DRAIN BOX

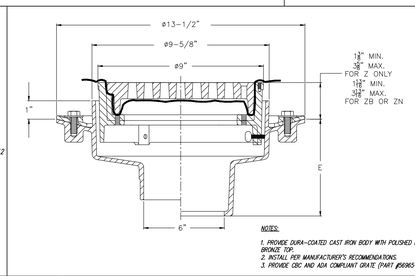

3 C-11 ZURN Z520 HEAVY-DUTY ADJUSTABLE FLOOR DRAIN INLET PROTECTION

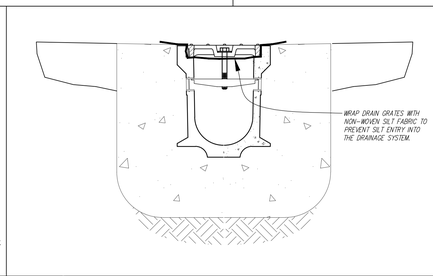

4 C-11 TRENCH DRAIN INLET PROTECTION

IDENTIFICATION STAMP
DIV. OF THE STATE ARCHITECT
APP: 03-122664 INC:
REVIEWED FOR
SS ☑ FLS ☑ ACS ☑
DATE: 05/12/2023

pjhm architects

LICENSED ARCHITECT
RICHARD W. RANSOM
No. C15385
REN. 02/25
STATE OF CALIFORNIA

SWANSON ENGINEERING, INC.
2000 E. Thompson Blvd., Ventura, CA 93001
ph.(805) 653-4616 • (661) 823-4775 • fax 653-4509
CIVIL
CERT. 22-053

REGISTERED PROFESSIONAL ENGINEER
ROBERT T. SWANSON
No. 43032
EXP. 3-31-24
STATE OF CALIFORNIA

HIGHLAND HIGH SCHOOL
50M POOL & AQUATICS CENTER

KERN HIGH SCHOOL DISTRICT

B.M.P. DETAILS

C-11

OC Office: 24461 Ridge Route Drive #100, Laguna Hills, CA 92653 • OC Phone: 949.496.6191 • SD Office: 804 Pier View Way #103, Oceanside, CA 92054 • SD Phone: 760.730.5527 • LA Office: 837 Traction Avenue, #410, Los Angeles, CA 90013 • LA Phone: 213.278.0172 • Web: pjhm.com

VICINTIY MAP
N.T.S.

BENCHMARK

TOP OF CAP ON CITY OF BAKERSFIELD CONCRETE MONUMENT IN LAMPHOLE AT THE CENTERLINE INTERSECTION OF AUBURN STREET AND PIPER WAY PER CITY OF BAKERSFIELD BENCH MARK BOOK.

ELEVATION = 804.26'

BASIS OF BEARINGS

THE BEARING OF N89°17'26"E SHOWN FOR THE SOUTH LINE OF THE SOUTHEAST QUARTER OF SECTION 14, T.29S., R.28E., M.D.M. ON RECORD OF SURVEY, R.S. BOOK 9, PAGE 91, WAS USED AS THE BASIS OF BEARINGS HEREON.

LEGAL DESCRIPTION

BEING A PORTION OF THE SOUTHEAST QUARTER OF SECTION 14, T.29S., R.28E., M.D.B.M.

ADDRESS

2900 ROYAL SCOTS WAY

APN

146-020-23

UTILITY NOTE

NOT ALL UTILITIES WERE LOCATED BY THIS SURVEY AND SWANSON ENGINEERING, INC. ASSUMES NO RESPONSIBILITY FOR UNDERGROUND UTILITIES OR FACILITIES NOT SHOWN OR FOR INFORMATION OBTAINED FROM OUTSIDE SOURCES.

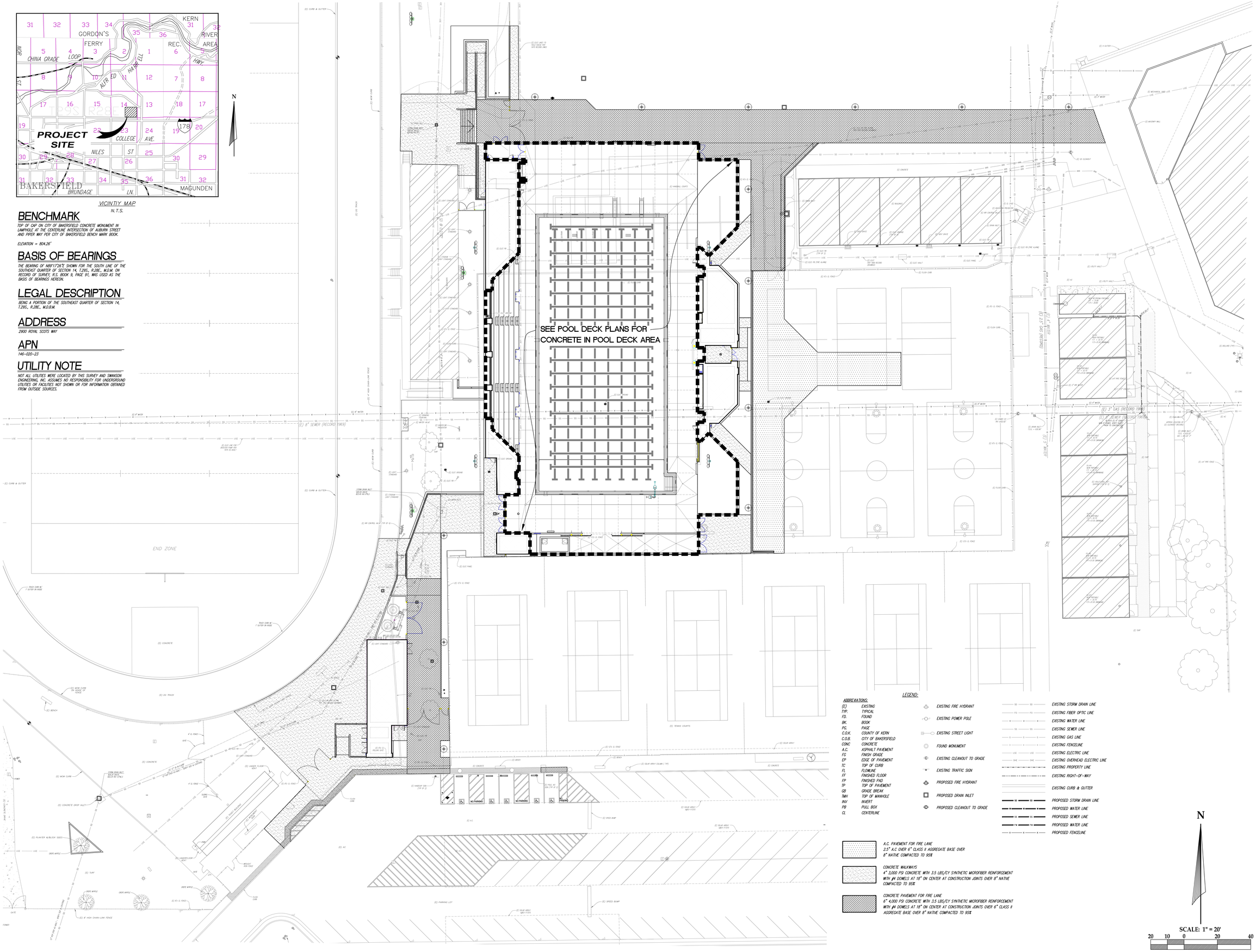

LEGEND:

ABBREVIATIONS:

(E)	EXISTING
TYP.	TYPICAL
FD.	FOUND
BK.	BOOK
PG.	PAGE
C.O.K.	COUNTY OF KERN
C.O.B.	CITY OF BAKERSFIELD
CONC	CONCRETE
A.C.	ASPHALT PAVEMENT
FG	FINISH GRADE
EP	EDGE OF PAVEMENT
TC	TOP OF CURB
FL	FLOWLINE
FF	FINISHED FLOOR
FP	FINISHED PAD
TP	TOP OF PAVEMENT
GB	GRADE BREAK
TMH	TOP OF MANHOLE
INV	INVERT
PB	PULL BOX
CL	CENTERLINE

EXISTING FIRE HYDRANT
EXISTING POWER POLE
EXISTING STREET LIGHT
FOUND MONUMENT
EXISTING CLEANOUT TO GRADE
EXISTING TRAFFIC SIGN
PROPOSED FIRE HYDRANT
PROPOSED DRAIN INLET
PROPOSED CLEANOUT TO GRADE

EXISTING STORM DRAIN LINE
EXISTING FIBER OPTIC LINE
EXISTING WATER LINE
EXISTING SEWER LINE
EXISTING GAS LINE
EXISTING FENCELINE
EXISTING ELECTRIC LINE
EXISTING OVERHEAD ELECTRIC LINE
EXISTING PROPERTY LINE
EXISTING RIGHT-OF-WAY
EXISTING CURB & GUTTER
PROPOSED STORM DRAIN LINE
PROPOSED WATER LINE
PROPOSED SEWER LINE
PROPOSED WATER LINE
PROPOSED FENCELINE

A.C. PAVEMENT FOR FIRE LANE
2.5" A.C OVER 6" CLASS II AGGREGATE BASE OVER 8" NATIVE COMPACTED TO 95%

CONCRETE WALKWAYS
4" 3,000 PSI CONCRETE WITH 3.5 LBS/CY SYNTHETIC MICROFIBER REINFORCEMENT WITH #4 DOWELS AT 18" ON CENTER AT CONSTRUCTION JOINTS OVER 8" NATIVE COMPACTED TO 95%

CONCRETE PAVEMENT FOR FIRE LANE
6" 4,000 PSI CONCRETE WITH 3.5 LBS/CY SYNTHETIC MICROFIBER REINFORCEMENT WITH #4 DOWELS AT 18" ON CENTER AT CONSTRUCTION JOINTS OVER 6" CLASS II AGGREGATE BASE OVER 8" NATIVE COMPACTED TO 95%

IDENTIFICATION STAMP
DIV. OF THE STATE ARCHITECT
APP: 03-122664 INC:
REVIEWED FOR
SS ☑ FLS ☑ ACS ☑
DATE: 05/12/2023

pjhm architects

LICENSED ARCHITECT
THOMAS W. KRUSE
NO. C15585
REN. 02/25
STATE OF CALIFORNIA

SWANSON ENGINEERING, INC.
2000 Oak Street, Suite 150 ~ Bakersfield, CA 93301
p:(661) 831-4919; f:(661) 873-4777
JOB#: 22-053
MCN

REGISTERED PROFESSIONAL ENGINEER
GILBERT T. SWANSON
No. 43032
EXP. 3-31-24
STATE OF CALIFORNIA

HIGHLAND HIGH SCHOOL
50M POOL & AQUATICS CENTER

KERN HIGH SCHOOL DISTRICT

SITE PAVEMENT PLAN

C-12

OC Office: 24461 Ridge Route Drive #100, Laguna Hills, CA 92653 • OC Phone: 949.496.6191 • SD Office: 804 Pier View Way #103, Oceanside, CA 92054 • SD Phone: 760.730.5527 • LA Office: 837 Traction Avenue, #410, Los Angeles, CA 90013 • LA Phone: 213.278.0172 • Web: pjhm.com

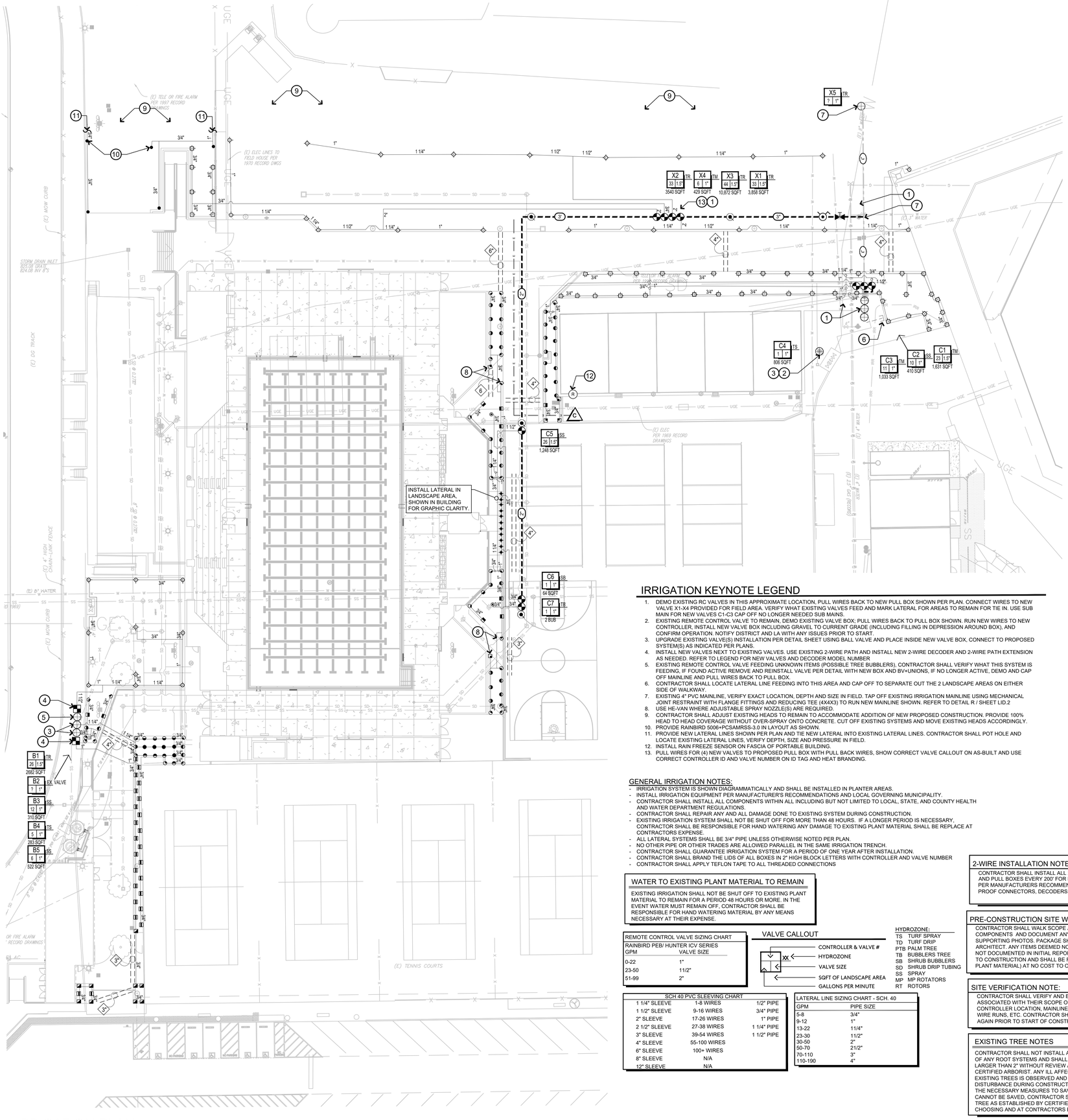

IRRIGATION PLAN

SCALE: 1" = 20'-0"

IRRIGATION KEYNOTE LEGEND

1. DEMO EXISTING RC VALVES IN THIS APPROXIMATE LOCATION, PULL WIRES BACK TO NEW PULL BOX SHOWN PER PLAN. CONNECT WIRES TO NEW VALVE X1-X4 PROVIDED FOR FIELD AREA. VERIFY WHAT EXISTING VALVES FEED AND MARK LATERAL FOR AREAS TO REMAIN FOR TIE IN. USE SUB MAIN FOR NEW VALVES C1-C3 CAP OFF NO LONGER NEEDED SUB MAINS.
2. EXISTING REMOTE CONTROL VALVE TO REMAIN, DEMO EXISTING VALVE BOX; PULL WIRES BACK TO PULL BOX SHOWN. RUN NEW WIRES TO NEW CONTROLLER, INSTALL NEW VALVE BOX INCLUDING GRAVEL TO CURRENT GRADE (INCLUDING FILLING IN DEPRESSION AROUND BOX), AND CONFIRM OPERATION. NOTIFY DISTRICT AND LA WITH ANY ISSUES PRIOR TO START.
3. UPGRADE EXISTING VALVE(S) INSTALLATION PER DETAIL SHEET USING BALL VALVE AND PLACE INSIDE NEW VALVE BOX, CONNECT TO PROPOSED SYSTEM(S) AS INDICATED PER PLANS.
4. INSTALL NEW VALVES NEXT TO EXISTING VALVES. USE EXISTING 2-WIRE PATH AND INSTALL NEW 2-WIRE DECODER AND 2-WIRE PATH EXTENSION AS NEEDED. REFER TO LEGEND FOR NEW VALVES AND DECODER MODEL NUMBER
5. EXISTING REMOTE CONTROL VALVE FEEDING UNKNOWN ITEMS (POSSIBLE TREE BUBBLERS), CONTRACTOR SHALL VERIFY WHAT THIS SYSTEM IS FEEDING, IF FOUND ACTIVE REMOVE AND REINSTALL VALVE PER DETAIL WITH NEW BOX AND BV+UNIONS, IF NO LONGER ACTIVE, DEMO AND CAP OFF MAINLINE AND PULL WIRES BACK TO PULL BOX.
6. CONTRACTOR SHALL LOCATE LATERAL LINE FEEDING INTO THIS AREA AND CAP OFF TO SEPARATE OUT THE 2 LANDSCAPE AREAS ON EITHER SIDE OF WALKWAY.
7. EXISTING 4" PVC MAINLINE, VERIFY EXACT LOCATION, DEPTH AND SIZE IN FIELD. TAP OFF EXISTING IRRIGATION MAINLINE USING MECHANICAL JOINT RESTRAINT WITH FLANGE FITTINGS AND REDUCING TEE (4X4X3) TO RUN NEW MAINLINE SHOWN. REFER TO DETAIL R / SHEET LID.2
8. USE HE-VAN WHERE ADJUSTABLE SPRAY NOZZLE(S) ARE REQUIRED.
9. CONTRACTOR SHALL ADJUST EXISTING HEADS TO REMAIN TO ACCOMMODATE ADDITION OF NEW PROPOSED CONSTRUCTION. PROVIDE 100% HEAD TO HEAD COVERAGE WITHOUT OVER-SPRAY ONTO CONCRETE. CUT OFF EXISTING SYSTEMS AND MOVE EXISTING HEADS ACCORDINGLY.
10. PROVIDE RAINBIRD 5006+PCSAMRSS-3.0 IN LAYOUT AS SHOWN.
11. PROVIDE NEW LATERAL LINES SHOWN PER PLAN AND TIE NEW LATERAL INTO EXISTING LATERAL LINES. CONTRACTOR SHALL POT HOLE AND LOCATE EXISTING LATERAL LINES, VERIFY DEPTH, SIZE AND PRESSURE IN FIELD.
12. INSTALL RAIN FREEZE SENSOR ON FASCIA OF PORTABLE BUILDING.
13. PULL WIRES FOR (4) NEW VALVES TO PROPOSED PULL BOX WITH PULL BACK WIRES, SHOW CORRECT VALVE CALLOUT ON AS-BUILT AND USE CORRECT CONTROLLER ID AND VALVE NUMBER ON ID TAG AND HEAT BRANDING.

GENERAL IRRIGATION NOTES:

- IRRIGATION SYSTEM IS SHOWN DIAGRAMMATICALLY AND SHALL BE INSTALLED IN PLANTER AREAS.
- INSTALL IRRIGATION EQUIPMENT PER MANUFACTURER'S RECOMMENDATIONS AND LOCAL GOVERNING MUNICIPALITY.
- CONTRACTOR SHALL INSTALL ALL COMPONENTS WITHIN ALL INCLUDING BUT NOT LIMITED TO LOCAL, STATE, AND COUNTY HEALTH AND WATER DEPARTMENT REGULATIONS.
- CONTRACTOR SHALL REPAIR ANY AND ALL DAMAGE DONE TO EXISTING SYSTEM DURING CONSTRUCTION.
- EXISTING IRRIGATION SYSTEM SHALL NOT BE SHUT OFF FOR MORE THAN 48 HOURS. IF A LONGER PERIOD IS NECESSARY, CONTRACTOR SHALL BE RESPONSIBLE FOR HAND WATERING ANY DAMAGE TO EXISTING PLANT MATERIAL SHALL BE REPLACE AT CONTRACTORS EXPENSE.
- ALL LATERAL SYSTEMS SHALL BE 3/4" PIPE UNLESS OTHERWISE NOTED PER PLAN.
- NO OTHER PIPE OR OTHER TRADES ARE ALLOWED PARALLEL IN THE SAME IRRIGATION TRENCH.
- CONTRACTOR SHALL GUARANTEE IRRIGATION SYSTEM FOR A PERIOD OF ONE YEAR AFTER INSTALLATION.
- CONTRACTOR SHALL BRAND THE LIDS OF ALL BOXES IN 2" HIGH BLOCK LETTERS WITH CONTROLLER AND VALVE NUMBER
- CONTRACTOR SHALL APPLY TEFLON TAPE TO ALL THREADED CONNECTIONS

WATER TO EXISTING PLANT MATERIAL TO REMAIN

EXISTING IRRIGATION SHALL NOT BE SHUT OFF TO EXISTING PLANT MATERIAL TO REMAIN FOR A PERIOD 48 HOURS OR MORE. IN THE EVENT WATER MUST REMAIN OFF, CONTRACTOR SHALL BE RESPONSIBLE FOR HAND WATERING MATERIAL BY ANY MEANS NECESSARY AT THEIR EXPENSE.

REMOTE CONTROL VALVE SIZING CHART

RAINBIRD PEB/ HUNTER ICV SERIES

GPM	VALVE SIZE
0-22	1"
23-50	11/2"
51-99	2"

VALVE CALLOUT

HYDROZONE:

TS	TURF SPRAY
TD	TURF DRIP
PTB	PALM TREE
TB	BUBBLERS TREE
SB	SHRUB BUBBLERS
SD	SHRUB DRIP TUBING
SS	SPRAY
MP	MP ROTATORS
RT	ROTORS

SCH 40 PVC SLEEVING CHART

1 1/4" SLEEVE	1-8 WIRES	1/2" PIPE
1 1/2" SLEEVE	9-16 WIRES	3/4" PIPE
2" SLEEVE	17-26 WIRES	1" PIPE
2 1/2" SLEEVE	27-38 WIRES	1 1/4" PIPE
3" SLEEVE	39-54 WIRES	1 1/2" PIPE
4" SLEEVE	55-100 WIRES	
6" SLEEVE	100+ WIRES	
8" SLEEVE	N/A	
12" SLEEVE	N/A	

LATERAL LINE SIZING CHART - SCH. 40

GPM	PIPE SIZE
5-8	3/4"
9-12	1"
13-22	11/4"
23-30	11/2"
30-50	2"
50-70	21/2"
70-110	3"
110-190	4"

2-WIRE INSTALLATION NOTE:

CONTRACTOR SHALL INSTALL ALL 2-WIRE WIRE IN 1 ½" MIN CONDUIT WITH SWEEPS AND PULL BOXES EVERY 200' FOR EASE OF ACCESS. ALL COMPONENTS SHALL BE PER MANUFACTURERS RECOMMENDATIONS INCLUDING BUT NOT LIMITED TO WATER PROOF CONNECTORS, DECODERS, SURGE PROTECTORS, ETC.

PRE-CONSTRUCTION SITE WALK AND DOCUMENTATION:

CONTRACTOR SHALL WALK SCOPE AND AREAS JUST BEYOND, OPERATE ALL COMPONENTS AND DOCUMENT ANY DEFICIENCIES OBSERVED IN WRITING AND WITH SUPPORTING PHOTOS. PACKAGE SHALL BE PROVIDED TO OWNER AND LANDSCAPE ARCHITECT. ANY ITEMS DEEMED NON-OPERATIONAL AT TURN OVER WALK THAT WAS NOT DOCUMENTED IN INITIAL REPORT, SHALL BE DEEMED TO HAVE OCCURRED DUE TO CONSTRUCTION AND SHALL BE REPAIRED OR REPLACED (INCLUDING AFFECTED PLANT MATERIAL) AT NO COST TO OWNER.

SITE VERIFICATION NOTE:

CONTRACTOR SHALL VERIFY AND BECOME FAMILIAR WITH THE SITE AND THE ITEMS ASSOCIATED WITH THEIR SCOPE OF WORK INCLUDING BUT NOT LIMITED TO CONTROLLER LOCATION, MAINLINE LOCATION, OPEN STATIONS ON CONTROLLER, WIRE RUNS, ETC. CONTRACTOR SHALL PROCEED AS STATED PRIOR TO BIDDING AND AGAIN PRIOR TO START OF CONSTRUCTION.

EXISTING TREE NOTES

CONTRACTOR SHALL NOT INSTALL ANY PLANT MATERIAL WITHIN 12" OF ANY ROOT SYSTEMS AND SHALL NOT CUT OR DAMAGE ANY ROOT LARGER THAN 2" WITHOUT REVIEW AND WRITTEN APPROVAL BY A CERTIFIED ARBORIST. ANY ILL AFFECTS ON THE HEALTH OF THE EXISTING TREES IS OBSERVED AND WAS A DIRECT RESULT OF THE DISTURBANCE DURING CONSTRUCTION, CONTRACTOR SHALL TAKE THE NECESSARY MEASURES TO SAVE THE TREE; IF THE TREE CANNOT BE SAVED, CONTRACTOR SHALL PROVIDE CREDIT FOR TREE AS ESTABLISHED BY CERTIFIED ARBORIST OF OWNERS CHOOSING AND AT CONTRACTORS EXPENSE.

POT HOLE AND SITE PREP. NOTE:

CONTRACTOR SHALL POT HOLE, LOCATE AND IDENTIFY THE SIZE AND LOCATION OF ALL EXISTING ITEMS INCLUDING BUT NOT LIMITED TO MAINLINE, VALVES, SLEEVES, AND LATERALS PRIOR TO START OF DEMOLITION. ALL AFFECTED SYSTEMS ARE TO BE CUT BACK, ISOLATED AND CAPPED TO MINIMIZE IMPACT TO ADJACENT EXISTING LANDSCAPE AREAS DURING THE DEMOLITION AND CONSTRUCTION PROCESS.

IRRIGATION DEMO NOTE:

CONTRACTOR TO DEMO ALL IRRIGATION COMPONENTS WITHIN FIELD AREA NOTED TO BE REPLACED WITH NEW INCLUDING BUT NOT LIMITED TO VALVES (TURN OVER TO DISTRICT), HEADS AND SWING JOINTS (TURN OVER TO DISTRICT), LATERALS (TO BE ABANDONED IN PLACE), ETC. CONTRACTOR SHALL KEEP ALL SYSTEMS ON OUTSIDE OF SCOPE OPERATIONAL AND SHALL NOT LEAVE SITE WITHOUT WATER LONG THAN A 48 HOUR PERIOD.

WATER EFFICIENT LANDSCAPE COMPLIANCE NOTE

I HAVE COMPLIED WITH THE CRITERIA OF THE WATER EFFICIENT LANDSCAPE ORDINANCE (STATE OF CALIFORNIA TITLE 23, DIVISION 2, CHAPTER 2.7) AND APPLIED THEM ACCORDINGLY FOR THE EFFICIENT USE OF WATER IN THE IRRIGATION DESIGN PLAN.

BRANDON PETRUNIO, RLA 5894: _____ DATE: _____

IRRIGATION LEGEND AND NOTE REFERENCE:

- REFER TO SHEET LID.2 FOR IRRIGATION NOTES.
- REFER TO SHEET LI.1 FOR IRRIGATION LEGEND.

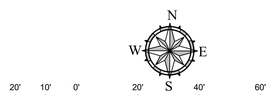

20' 10' 0' 20' 40' 60'

SCALE: 1" : 20'-0"
GRAPHIC SCALE

IRRIGATION MATERIAL LEGEND

EMISSION DEVICES

SYMBOL	MANUF.	MODEL	DEGREES	TYPE	GPM	PSI	RADIUS	DTL. REF.
BUBBLERS								
	SALCO	SLV-PSTM-CV-2	360	LV BUBBLER	2 GPH	30	N/A	L+M - SHEET LID.1
		INSTALL 2 BUBBLER PER SYMBOL, 2 PER SHRUB						
	BOWSMITH	FD-2010	360	T. BUBBLER	1 GPH*6	30	N/A	J+K - SHEET LID.1
SPRAY HEADS								
	HUNTER/ RAINBIRD	PROS-06-PRS30-CV-SQ-QTR	90	POP-UP	.12	30	4"	H - SHEET LID.1
	HUNTER/ RAINBIRD	PROS-06-PRS30-CV-SQ-HALF	180	POP-UP	.20	30	4"	H - SHEET LID.1
	HUNTER/ RAINBIRD	PROS-06-PRS30-CV-8Q	90	POP-UP	.26	30	6'-8'	H - SHEET LID.1
	HUNTER/ RAINBIRD	PROS-06-PRS30-CV-8H	180	POP-UP	.52	30	6'-8'	H - SHEET LID.1
	HUNTER/ RAINBIRD	PROS-06-PRS30-CV-8F	360	POP-UP	1.05	30	6'-8'	H - SHEET LID.1
	HUNTER/ RAINBIRD	PROS-06-PRS30-CV-10Q	90	POP-UP	.39	30	8'-10'	H - SHEET LID.1
	HUNTER/ RAINBIRD	PROS-06-PRS30-CV-10H	180	POP-UP	.79	30	8'-10'	H - SHEET LID.1
	HUNTER/ RAINBIRD	PROS-06-PRS30-CV-10F	360	POP-UP	1.58	30	8'-10'	H - SHEET LID.1
	HUNTER/ RAINBIRD	PROS-06-PRS30-CV-12Q	90	POP-UP	.65	30	10'-12'	H - SHEET LID.1
	HUNTER/ RAINBIRD	PROS-06-PRS30-CV-12H	180	POP-UP	1.30	30	10'-12'	H - SHEET LID.1
	HUNTER/ RAINBIRD	PROS-06-PRS30-CV-12F	360	POP-UP	2.60	30	10'-12'	H - SHEET LID.1
	HUNTER/ RAINBIRD	PROS-06-PRS30-CV-15Q	90	POP-UP	.92	30	12'-15'	H - SHEET LID.1
	HUNTER/ RAINBIRD	PROS-06-PRS30-CV-15H	180	POP-UP	1.85	30	12'-15'	H - SHEET LID.1
	HUNTER/ RAINBIRD	PROS-06-PRS30-CV-15F	360	POP-UP	3.70	30	12'-15'	H - SHEET LID.1
MP ROTORS								
	HUNTER	PROS-06-PRS40-CV-MPCORNER	360	POP-UP	.39	40	14'-0"	H - SHEET LID.1
	HUNTER	PROS-06-PRSXX-CV-MP815-90-180	ADJ	POP-UP	.49 / .93	40	10-15"	H - SHEET LID.1
	HUNTER	PROS-06-PRSXX-MP815-360	360	POP-UP	1.87	40	10-15'	H - SHEET LID.1
	XX: CONTRACTOR SHALL USE 30 PSI REGULATED FOR 10-13' AND 40 PSI REGULATED FOR 12'-15'							
	HUNTER	PROS-06-PRSXX-MP2000-90-180	ADJ	POP-UP	.43/ .77	40	13'-20'	H - SHEET LID.1
	HUNTER	PROS-06-PRSXX-MP2000-360	360	POP-UP	1.48	40	13'-20'	H - SHEET LID.1
	XX: CONTRACTOR SHALL USE 30 PSI REGULATED FOR 13-17' AND 40 PSI REGULATED FOR 18'-20'							
	HUNTER	PROS-06-PRSXX-MP3000-90-180	ADJ	POP-UP	.86/ 1.82	40	22'-30'	H - SHEET LID.1
	HUNTER	PROS-06-PRSXX-MP3000-360	360	POP-UP	3.64	40	22'-30'	H - SHEET LID.1
	XX: CONTRACTOR SHALL USE 30 PSI REGULATED FOR 22-25' AND 40 PSI REGULATED FOR 26'-30'							
ROTORS								
	HUNTER	I-20-06-SS-MPR30-Q	ADJ	ROTOR	1.40	45	30'	I - SHEET LID.1
	HUNTER	I-20-06-SS-MPR30-H	ADJ	ROTOR	2.96	45	30'	I - SHEET LID.1
	HUNTER	I-20-06-SS-MPR30-F	360	ROTOR	5.78	45	30'	I - SHEET LID.1
	RAINBIRD	6504-PC-SS-6	ADJ	ROTOR	5.5	50	45"	I - SHEET LID.1
	RAINBIRD	6504-FC-SS-6	360	ROTOR	5.5	50	45'	I - SHEET LID.1

NOTE:
-CONTRACTOR SHALL USE RAINBIRD PCS SCREENS FOR REDUCTION OF RADII GREATER THAN 10%
-VARIABLE ARC NOZZLES ARE PERMISSIBLE IN OBSCURE AREAS IF RAINBIRD HE-VANS / HUNTER ADJUSTABLE NOZZLES ARE UTILIZED ONLY.

DISTRIBUTION COMPONENTS

SYMBOL	MANUF.	MODEL	DESCRIPTION	DTL. REF.
	JAIN	ARV-2	2" COMBINATION AIR VALVE	C - SHEET LID.1
	NIBCO	T-585-70-66 (1"-2") F-619-RWS-SON (2.5"+)	BR0NZE BALL VALVE- FULL PORT - THREADED WITH SS HANDLE DUCTILE IRON GATE VALVE- RESILIENT WEDGE, SQUARE OPERATING NUT (SIZE PER MAINLINE SIZE)	D+E - SHEET LID.1
	HUNTER	ICV-XXXG-FS	REMOTE CONTROL VALVE WITH ALL PURPOSE SOLENOID AND COMPATIBLE 2-WIRE DECODER. INSTALL ON 2-WIRE PATH WITH HUNTER ICD-100 SINGLE STATION DECODER.	G - SHEET LID.1
	RAINBIRD	XXX-PEB	REMOTE CONTROL VALVE WITH ALL PURPOSE SOLENOID. WIRE TO CONVENTIONAL CONTROLLER. PULL NEW WIRES FROM EXISTING CONTROLLER INSIDE BUILDING TO PROPOSED VALVES IN ADDITION TO ONES REPLACING EXISTING VALVES.	F - SHEET LID.1
	P.V.C.	SCH 40 MIN PIPE SIZE ¾"	NON-PRESSURE LATERAL LINE WITH SCH. 40 FITTINGS. THREADED FITTINGS SHALL BE SCH. 80 (SIZE PER PLAN)	B - SHEET LID.1
	P.V.C.	SCH. 40 MIN PIPE SIZE 1" CLASS 315 CLASS 200 BELL END GASKET	PRESSURE MAINLINE 1" THRU 1 1/2" THREADED FITTINGS SHALL BE SCH. 80 (SIZE PER PLAN) PRESSURE MAINLINE 2" THRU 3" THREADED FITTINGS SHALL BE SCH. 80 (SIZE PER PLAN) PRESSURE MAINLINE 4"+ FITTINGS SHALL BE LEEMCO JOINT RESTRAINTS SELF RESTRAINED FITTINGS (RF SERIES, LPP, ETC.)	A&B - SHEET LID.1 S - SHEET LID.2 R - SHEET LID.2
	P.V.C.	SCH. 40 - GRAY CONDUIT	2" CONDUIT WITH PULL STRING FOR FUTURE USE.	A - SHEET LID.1
	P.V.C.	SCH. 40	SLEEVE FOR PRESSURE MAINLINE, LATERAL OR WIRE BUNDLE. ALL PIPE(S)/ WIRE BUNDLES REGARDLESS OF SYMBOL BEING SHOWN SHALL BE SLEEVED WHEN INSTALLED UNDER HARDSCAPE. (2X DIA. OF PIPE OR WIRE BUNDLE)	A - SHEET LID.1
P			PULL BOX FOR FUTURE VALVE WIRES. INSTALL IN PLANTER AREAS WHENEVER POSSIBLE CONCRETE BOXES TO BE USED IN HARDSCAPE AREAS. IN ADDITION TO BOXES SHOWN ON PLANS CONTRACTOR SHALL INSTALL ADDITIONAL BOXES AS NOTED PER WIRE/ CONDUIT NOTE.	Q - SHEET LID.2
C R			RAINBIRD ESP-ME3 CONTROLLER IN A LIGHT DUTY FRONT ENTRY PEDESTAL MOUNT CONTROLLER WITH FLOW SENSING, WIFI, SMART AUTO ETO ADJUST, ONSITE WEATHER STATION AND REMOTE CONTROL. ITS MODEL#: ICA13-RB7-13/SP/WRFS/IFS-100C NOTES: 120 V. ELECTRICAL LINE SHALL BE SUPPLIED BY GENERAL CONTRACTOR AND MUST BE A GFCI WITH 1-GANG EXTRA DUTY NON-METALLIC WHILE-IN-USE WEATHERPROOF HORIZONTAL/VERTICAL RECEPTACLE COVER KIT . CONTRACTOR SHALL INSTALL CONTROLLER PER MANUFACTURER'S RECOMMENDATIONS.	N-P / SHEET LID.1

EXISTING EQUIPMENT LEGEND

SYMBOL	MANUFACTURE / MODEL NO. / DESCRIPTION
	(EXISTING) IRRIGATION MAINLINE SHOWN FOR REFERENCE ONLY. PROTECT IN PLACE, REPAIR ANY DAMAGE DUE TO CONSTRUCTION. VERIFY SIZE, TYPE, AND EXACT LOCATION IN FIELD. IF CONTRACTOR IS NOT ABLE TO LOCATE EXISTING MAINLINE CONTRACTOR SHALL PROVIDE AND INSTALL NEW MAINLINE AND MAKE ALL NECESSARY CONNECTIONS FOR PROPER OPERATION OF NEW AND EXISTING IRRIGATION SYSTEM.
	(EXISTING) REMOTE CONTROL VALVE(S). PROTECT IN PLACE, VERIFY EXACT LOCATION INFIELD. CONTRACTOR TO ASSESS WHICH VALVE FEEDS WHICH LANDSCAPE AREAS TO REMAIN. REMOVE AND REPLACE EXISTING VALVE BOX, INCLUDING GRAVEL
C	EXISTING IRRIGATION CONTROLLER MOUNTED INSIDE BUILDING. CONTRACTOR TO VERIFY OPEN STATIONS, AND STATION NUMBERING FOR VALVES AFFECTED BY PROPOSED CHANGES. ADJUST STATION NUMBERS AS NEEDED AND INDICATE CHANGE ON AS-BUILT PLANS.

IDENTIFICATION STAMP
DIV. OF THE STATE ARCHITECT
APP: 03-122664 INC:
REVIEWED FOR
SS ☑ FLS ☑ ACS ☑
DATE: 05/12/2023

pjhm architects
LICENSED ARCHITECT
BRANDON W. PRINCE
NO. C15585
REN. 02/25
STATE OF CALIFORNIA

BPA LANDSCAPE ARCHITECTS
BRANDON PETRUNIO & ASSOCIATES, INC.
LANDSCAPE ARCHITECTS
Design Studio: 301 N. San Dimas Ave., San Dimas, CA. 91773
Corporate Office: 24461 Ridge Route Drive #100, Laguna Hills, CA. 92653
T: (424) 235-8940, M: (951) 312-9943, E: brandon@bpalas.com

LICENSED LANDSCAPE ARCHITECT
BRANDON PETRUNIO
Signature
01/31/2025
Renewal Date
01/31/2023
Date
STATE OF CALIFORNIA

HIGHLAND HIGH SCHOOL
50M POOL & AQUATICS CENTER

KERN HIGH SCHOOL DISTRICT

LANDSCAPE IRRIGATION PLAN - ENLARGED

SITE

LI.1

OC Office: 24461 Ridge Route Drive #100, Laguna Hills, CA 92653 • OC Phone: 949.496.6191 • SD Office: 804 Pier View Way #103, Oceanside, CA 92054 • SD Phone: 760.730.5527 • LA Office: 837 Traction Avenue, #410, Los Angeles, CA 90013 • LA Phone: 213.278.0172 • Web: pjhm.com

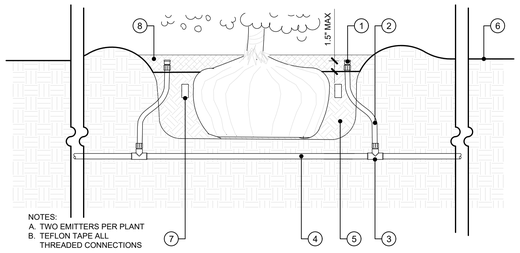

LEGEND
1. PRESSURE COMPENSATING, CHECK VALVE DRIP EMITTER PER LEGEND. LOCATE AT EDGE OF PLANTING PIT / WATERING BASIN. INSTALL AFTER FLUSHING SYSTEM OF DEBRIS. (MAX 2" ABOVE FINISH GRADE)
2. 1/2" UV-RESISTANT PVC FLEXIBLE PIPE - HUNTER IH SERIES FLEX RISER. LENGTH AS NEEDED, 5' MAXIMUM LENGTH.
3. SCHEDULE 40 PVC REDUCING TEE. SOLVENT WELD FLEX PIPE TO PVC FITTING PER MANUFACTURERS RECOMMENDATIONS.
4. PVC LATERAL LINE FROM REMOTE CONTROL VALVE. DEPTH / COVER PER IRRIGATION SPECIFICATIONS.
5. PLANTING PIT. AMEND SOIL PER SPECIFICATIONS AND AGRONOMIC SOILS REPORT
6. FINISHED GRADE.
7. PLANT TABLET PER SPECIFICATIONS.
8. MULCH PER PLANTING PLAN.

M POINT SOURCE BUBBLERS - SECTION

SCALE: NTS

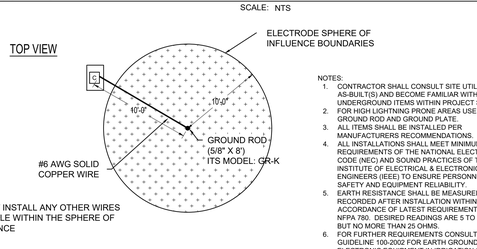

LEGEND
1. CONTROLLER/ OPEN FACE PANEL PER LEGEND
2. LCD SCREEN
3. REMOTE CONTROL VALVE WIRES (#12 COMMON/ #14 CONTROL/ SHIELDED FLOW SENSOR WIRE. SCH. 40 UV RESISTANT PIPE FOR REMOTE CONTROL VALVE WIRE BUNDLE. SIZE AS NEEDED TO HOUSE WIRES.
4. SCH. 40 GRAY ELECTRICAL SUPPLY CONDUIT, CONNECT POWER SOURCE, J-BOX INSIDE CONTROLLER. SIZE AS NEEDED MIN ¾"
6. BUILDING EDGE, POST WHERE OCCURS. MOUNT CONTROLLER USING SUPPLIED SCREWS AND ANCHORS.
7. WIRELESS RAIN & FREEZE SENSOR PER LEGEND
8. WIRELESS RAIN/FREEZE SENSOR INTERFACE
9. ALUMINUM WEATHERPROOF J-BOX, PLUG AND CEC COMPLIANT WEATHERPROOF POLYCARBONATE IN USE COVER.
10. 120 VAC 60 HZ POWER SUPPLY CONDUIT.

N CONTROLLER & RAIN SENSOR

SCALE: NTS

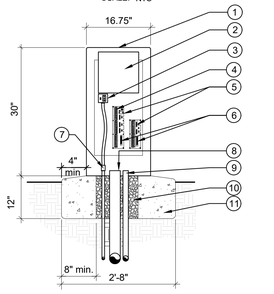

* NOTE ALL GROUNDING REQUIREMENTS FOR CONTROLLER ASSEMBLIES SHALL CONFORM TO LOCAL ELECTRICAL CODES. SEE GROUND DETAIL.

LEGEND
1. IMPERIAL ASSEMBLIES 18" FRONT ENTRY CONTROLLER ASSEMBLY NEMA 3R RAINPROOF ENCLOSURE (UL LISTED)
2. CONTROLLER
3. POWER SWITCH/GFI RECEPTACLE
4. MASTER VALVE OR PUMP START RELAY ASSEMBLY (OPTIONAL)
5. TERMINAL BOARD
6. REMOTE RECEIVER CONNECTOR (OPTIONAL)
7. 1" PVC CONDUIT FOR 120 VAC FROM METERED POWER SUPPLY. 120 WIRES MUST BE PLACED IN FLEX CONDUIT WITHIN PEDESTAL FOR UL LISTING AND SAFETY
8. PVC CONDUIT FOR CONTROL WIRES, SIZE AS REQUIRED
9. 1" PVC CONDUIT FOR FLOW SENSOR CABLE PAIGE CABLE P - 7162 - D (IF APPLICABLE)
10. FILL VOIDS WITH 3/8" PEA GRAVEL
11. POURED-IN-PLACE CONCRETE BASE

O CONTROLLER - PEDESTAL

SCALE: NTS

NOTES:
1. CONTRACTOR SHALL CONSULT SITE UTILITY AS-BUILT(S) AND BECOME FAMILIAR WITH ALL UNDERGROUND ITEMS WITHIN PROJECT SCOPE.
2. FOR HIGH LIGHTNING PRONE AREAS USE BOTH GROUND ROD AND GROUND PLATE.
3. ALL ITEMS SHALL BE INSTALLED PER MANUFACTURERS RECOMMENDATIONS.
4. ALL INSTALLATIONS SHALL MEET MINIMUM REQUIREMENTS OF THE NATIONAL ELECTRICAL CODE (NEC) AND SOUND PRACTICES OF THE INSTITUTE OF ELECTRICAL & ELECTRONIC ENGINEERS (IEEE) TO ENSURE PERSONNEL SAFETY AND EQUIPMENT RELIABILITY.
5. EARTH RESISTANCE SHALL BE MEASURED AND RECORDED AFTER INSTALLATION WITHIN ACCORDANCE OF LATEST REQUIREMENTS OF NFPA 780. DESIRED READINGS ARE 5 TO 10 OHMS BUT NO MORE THAN 25 OHMS.
6. FOR FURTHER REQUIREMENTS CONSULT THE ASIC GUIDELINE 100-2002 FOR EARTH GROUNDING ELECTRONIC EQUIPMENT IN IRRIGATION SYSTEMS.

DIGALERT WARNING! 811

PLEASE READ BEFORE INSTALLING GROUND ROD

TO AVOID CONTACT WITH HIGH VOLTAGE POWER CABLES, GAS LINES, OR DATA CABLES, PLEASE CONTACT THE OWNER'S REPRESENTATIVE AND "DIG ALERT" TO IDENTIFY POSSIBLE HAZARDS BELOW THE SURFACE. CONTACT WITH THESE HAZARDS WILL RESULT IN SEVERE INJURY OR DEATH.

P CONTROLLER GROUNDING

SCALE: NTS

I ROTOR

SCALE: NTS

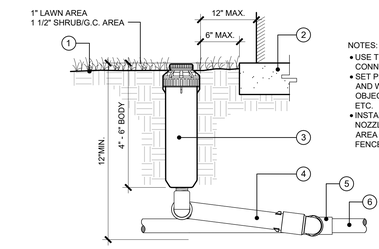

NOTES:
- USE TEFLON TAPE ON ALL PVC TO PVC CONNECTIONS; NO PIPE DOPE ALLOWED.
- SET PERIMETER HEADS 4"-6" FROM CURBS AND WALKS AND 6"-12" FROM VERTICAL OBJECTS SUCH AS FENCES AND WALLS, ETC.
- INSTALL SPRINKLER HEADS PLUMB. ADJUST NOZZLE STREAM TO COVER LANDSCAPE AREA WITHOUT OVERSPRAY ONTO PAVING, FENCES, WALLS OR BUILDINGS.

LEGEND:
1. FINISHED GRADE.
2. SIDEWALK, CURB, HARDSCAPE EDGE, ETC.
3. GEAR-DRIVEN ROTOR HEAD REFER TO LEGEND FOR MANU & MODEL.
4. TRIPLE SWING JOINT ASSEMBLY. (RAINBIRD TSJ OR EQUAL)(SIZE PER ROTOR INLET SIZE)
5. REDUCING TEE SxSxT
6. PVC NON-PRESSURE LATERAL LINE.

J MUTLI-OUTLET EMISSION DEVICE- TREE BUBBLER- PLAN VIEW

SCALE: NTS

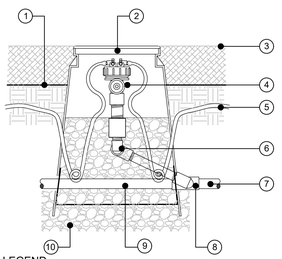

NOTE:
- COIL ADDITIONAL 9-INCHES OF TUBING IN VALVE BOX TO FACILITATE MAINTENANCE.
- FIELD INSTALLED BELOW GRADE PIPE CONNECTIONS SHALL BE THREADED PVC OR GLUED PVC.
- MICROTUBING MUST BE BURIED AT LEAST 6" BELOW GRADE AND THE MICROTUBING MUST BE SECURED BY A STAKE.
- MAXIMUM LENGTH OF MICROTUBING SHALL BE 10'-0".

LEGEND
1. FINISH GRADE
2. 7" ROUND BOX (RAINBIRD VB-7RND)
3. MULCH PER PLANTING PLAN.
4. MULTI-OUTLET EMISSION DEVICE PER LEGEND
5. 1/4-INCH TUBING: POLYETHYLENE DISTRIBUTION TUBING RAIN BIRD XQ-XXXX
6. TRIPPLE SWING JOINT
7. PVC LATERAL LINE
8. PVC SCH 40 TEE OR ELL
9. LANDSCAPE FABRIC
10. 12" MIN. 3/4" WASHED GRAVEL.
11. DIFFUSER BUG CAP: RAINBIRD DBC-025
12. 1/4-INCH TUBING STAKE: RAINBIRD TS-025

K MULTI-OUTLET EMITTER- TREE BUBBLER - SECTION

SCALE: NTS

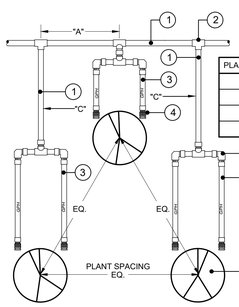

PLANT SPACING	LENGTH "A"	RISER "B"	RISER "C"
1.5 FT.	9 IN.	SLV-PVC-M-ACL-24	SLV-PVC-M-ACL-24
2 FT.	12 IN.	SLV-PVC-M-ACL-24	SLV-PVC-M-ACL-24
3 FT.	18 IN.	SLV-PVC-M-ACL-24	SLV-PVC-M-ACL-24
4 FT.	24 IN.	SLV-PVC-M-ACL-24	SLV-PVC-M-ACL-24

NOTES:
A. EMITTER SPACING SHALL BE BASED ON PLANT SPACING, INSTALL ALL IRRIGATION USING THE COMPONENTS DESCRIBED ABOVE. IRRIGATION EQUIPMENT SHALL BE COMPLETELY INSTALLED PRIOR TO PLANT LAYOUTS. ADJUST PLANT SPACING TO ACCOMMODATE FINAL IRRIGATION LAYOUT.
B. TEFLON TAPE ALL THREADED CONNECTIONS

LEGEND
1. PVC SCH. 40 PIPE.
2. PVC SCH. 80 1/2" REDUCING TEE.
3. HUNTER IH SERIES FLEX RISER
4. SALCO PRESSURE COMPENSATING EMITTER
5. PLANT, TRIANGULAR SPACING.
6. S X T COUPLING AND MARLEX STREET ELL

L POINT SOURCE BUBBLERS - PLAN VIEW

SCALE: NTS

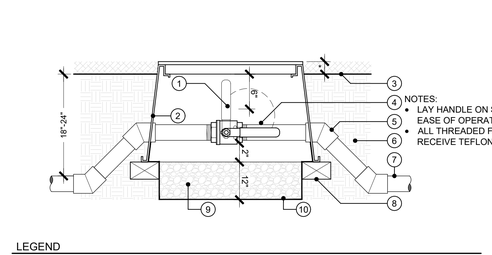

NOTES:
- LAY HANDLE ON SIDE FOR EASE OF OPERATION.
- ALL THREADED FITTINGS TO RECEIVE TEFLON TAPE.

LEGEND
1. BALL VALVE PER IRRIGATION LEGEND (LINE SIZE) LAY ON SIDE FOR EASE OF ACCESS.
2. RECTANGULAR VALVE BOX (RAINBIRD VB-JMB-H)
3. FINISH GRADE
4. SCH 80 PVC NIPPLE CUT TO LENGTH (2 REQUIRED)
5. SCH 80 PVC 45 DEGREE ELL (4 REQUIRED)
6. NATIVE SOIL
7. MAINLINE PIPING PER IRRIGATION LEGEND
8. COMMON BRICK SUPPORTS (4 REQUIRED)
9. FILL BASE OF BOX WITH 12" DEPTH OF 3/4" ROCK
10. FILTER FABRIC - ENSURE ALL VALVE BOX HOLES ARE COVERED
* 1/2" IN TURF AREAS, 1" IN SHRUB AREAS

E BALL VALVE

SCALE: NO_SCALE

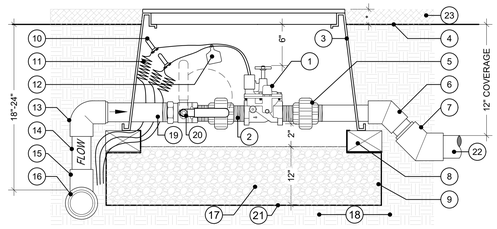

NOTES:
A. ALL THREADED FITTINGS SHALL RECEIVE 2 WRAPS OF TEFLON TAPE.
B. LAY BALL VALVE ON ITS SIDE FOR EASE OF OPERATION.
C. PER CONTRACTOR: EACH VALVE SHALL BE INDIVIDUAL CONNECTION TO MAINLINE -OR- LINE SIZE CAPACITY OF SUM GPM OF ALL VALVES ON MANIFOLD OR MAINLINE SIZE WHICHEVER IS LESS.
D. 2" AND LARGER VALVES SHALL USE SUPER JUMBO BOX (RAINBIRD VB-SPR-H + VB-SPR-B)
E. HEAT BRAND CONTROLLER AND STATION NUMBER ON LID IN 2" BLOCK LETTERS

LEGEND
1. REMOTE CONTROL VALVE PER IRRIGATION LEGEND
2. SCH 80 PVC NIPPLE (3 REQUIRED) VALVE SIZE
3. RECTANGULAR PLASTIC VALVE BOX (RAINBIRD VB-JBM-H) FINISH GRADE
4. SCH 80 UNION (TxT)(2 REQUIRED)
5. SCH 80 PVC 45 DEGREE ELL
6. SCH 40 PVC 45 DEGREE ELL
7. SCH 40 PVC 45 DEGREE ELL (BUSH UP TO LINE SIZE)
8. RECTANGULAR PLASTIC VALVE BOX (RAINBIRD VB-JMB-B)
9. COMMON BRICK SUPPORTS (4 REQUIRED)
10. WATER PROOF WIRE CONNECTORS (DBY /2 REQUIRED)
11. UF WIRES TO CONTROLLER (COLOR CODED) SEE SPECS.
12. I.D. TAG WITH CONTROLLER & STATION NUMBER (CHRISTY'S #ID-STD-Y1)
13. SCH 80 PVC 90 DEGREE (SIZE PER MAINLINE).
14. RISER. (SEE NOTES)
15. SCH 80 PVC TEE (SEE NOTES)
16. MAINLINE PIPING REFER TO PLAN
17. FILL BASE OF BOX WITH 3/4" GRAVEL
18. COMPACTED NATIVE SOIL
19. SCH 80 NIPPLE CUT TO LENGTH (2 REQUIRED)
20. BALL VALVE - NIBCO T-585-70-66 (SIZE PER RCV)
21. FILTER FABRIC - ENSURE ALL VALVE BOX HOLES ARE COVERED
22. LATERAL LINE (SIZE PER PAN)
23. MULCH REFER TO PLANTING PLAN
* 1/2" IN TURF AREAS, 2" IN SHRUB AREAS

F REMOTE CONTROL VALVE - CONVENTIONAL WIRE

SCALE: NO_SCALE

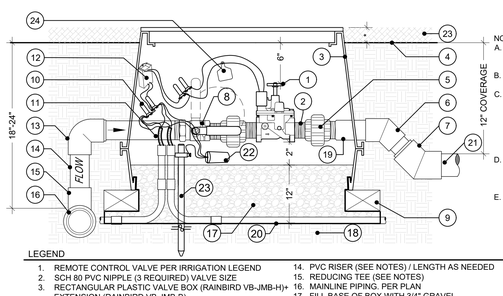

NOTES:
A. ALL THREADED FITTINGS SHALL RECEIVE 2 WRAPS OF TEFLON TAPE.
B. LAY BALL VALVE ON ITS SIDE FOR EASE OF OPERATION.
C. PER CONTRACTOR: EACH VALVE SHALL BE INDIVIDUAL CONNECTION TO MAINLINE -OR- LINE SIZE CAPACITY OF SUM GPM OF ALL VALVES ON MANIFOLD OR MAINLINE SIZE WHICHEVER IS LESS.
D. 2" AND LARGER VALVES SHALL USE SUPER JUMBO BOX (RAINBIRD VB-SPR-H + VB-SPR-B)
E. HEAT BRAND CONTROLLER AND STATION NUMBER ON LID IN 2" BLOCK LETTERS

LEGEND
1. REMOTE CONTROL VALVE PER IRRIGATION LEGEND
2. SCH 80 PVC NIPPLE (3 REQUIRED) VALVE SIZE
3. RECTANGULAR PLASTIC VALVE BOX (RAINBIRD VB-JMB-H)+ EXTENSION (RAINBIRD VB-JMB-B).
4. FINISH GRADE
5. SCH 80 UNION (TxT)(2 REQUIRED)
6. SCH 80 PVC 45 DEGREE ELL
7. SCH 80 PVC 45 DEGREE ELL (BUSH UP TO LINE SIZE)
8. BRASS FULL PORT BALL VALVE (NIBCO T-585-70-66)
9. COMMON BRICK SUPPORTS (4 REQUIRED)
10. WATER PROOF WIRE CONNECTORS (3M 3570G-N)
11. 2 WIRE CABLE TO CONTROLLER. PER MANU.
12. 2-WIRE DECODER. PER LEGEND + MANU.
13. SCH 80 PVC 90 DEGREE (SIZE PER MAINLINE).
14. PVC RISER (SEE NOTES) / LENGTH AS NEEDED
15. REDUCING TEE (SEE NOTES)
16. MAINLINE PIPING. PER PLAN
17. FILL BASE OF BOX WITH 3/4" GRAVEL
18. COMPACTED NATIVE SOIL
19. SCH 80 NIPPLE (CUT END OFF AND GLUE)
20. FILTER FABRIC - ENSURE ALL VALVE BOX HOLES ARE COVERED
21. LATERAL LINE (SIZE PER PAN).
22. SURGE PROTECTOR (WHERE APPLICABLE PER MANU.)
23. 8' GROUND ROD OR GROUND PLATE. PER DETAIL.
24. I.D. TAG WITH CONTROLLER & STATION NUMBER 1/2" IN TURF AREAS, 2" IN SHRUB AREAS

G REMOTE CONTROL VALVE W/ BALL VALVE - 2-WIRE DECODER

SCALE: NO_SCALE

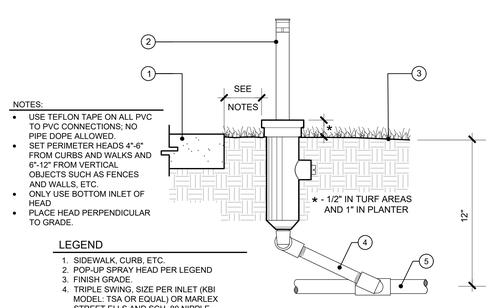

NOTES:
- USE TEFLON TAPE ON ALL PVC TO PVC CONNECTIONS; NO PIPE DOPE ALLOWED.
- SET PERIMETER HEADS 4"-6" FROM CURBS AND WALKS AND 6"-12" FROM VERTICAL OBJECTS SUCH AS FENCES AND WALLS, ETC.
- ONLY USE BOTTOM INLET OF HEAD
- PLACE HEAD PERPENDICULAR TO GRADE.

LEGEND
1. SIDEWALK, CURB, ETC.
2. POP-UP SPRAY HEAD PER LEGEND
3. FINISH GRADE.
4. TRIPLE SWING, SIZE PER INLET (KBI MODEL: TSA OR EQUAL) OR MARLEX STREET ELLS AND SCH. 80 NIPPLE
5. PVC LATERAL LINE

H POP-UP SPRAY HEAD

SCALE: NO_SCALE

A SLEEVING

SCALE: NO_SCALE

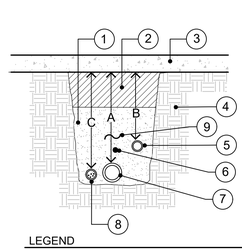

NOTES
A. SLEEVE SHALL BE 2 TIMES THE DIAMETER OF THE PIPE OR WIRE BUNDLE CARRIED.
B. BUNDLE WIRING & WRAP W/ ELECTRICAL TAPE @ 5'-0" INTERVALS.
C. ALL MAINLINE PIPING SHALL BE SLEEVED BELOW ALL HARDSCAPE ELEMENTS W/ SCH. 40 PVC UNLESS OTHERWISE SPECIFIED ON PLANS THE PIPE OR WIRE BUNDLE.
D. CONTRACTOR SHALL MARK EDGE OF PAVING ABOVE ENDS OF SLEEVE W/ A SCORE MARK TO DESIGNATED SLEEVE LOCATION.
E. SLEEVE ENDS SHALL EXTEND 24" BEYOND EDGE OF HARDSCAPE.
F. INSTALL MAINLINE MARKING TAPE AT A DEPTH OF 12" OF FINISH GRADE (RED OR YELLOW).
G. AFTER INSTALLATION OF PIPE & IRE, CONTRACTOR SHALL FILL REMAINING VOID IN ENDS OF SLEEVES W/ CONDUIT PUTTY.

LEGEND
1. SAND BACKFILL.
2. SOIL BACKFILL (SEE SPECS)
3. FINISH SURFACE (CONC./ AC. PAVING.
4. UNDISTURBED SOIL.
5. PLACE 12" DEEP NON-PRESSURE LATERAL IN SLEEVE.
6. GREEN COATED TRACER WIRE
7. PRESSURE PVC MAINLINE IN SLEEVE
8. CONTROLLER WIRING IN P.V.C. SLEEVE.
9. 6" WIDE DETECTABLE WARNING TAPE

DIMENSION	A	B	C
1/2" TO 4" IN SIZE WHERE BELOW VEHICULAR PAVING	36"	36"	36"
1/2" TO 4" IN SIZE WHERE BELOW PEDESTRIAN PAVING	24"	12"	24"

B TRENCHING

SCALE: NO_SCALE

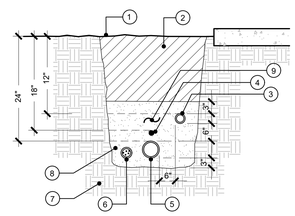

NOTES:
A. BUNDLE AND TAPE WIRES AT 10' O.C.
B. PIGTAIL AND LOOP CONTROL WIRES AT ALL CHANGES IN DIRECTION.
C. SPLICING OF WIRE RUNS IS NOT PERMITTED WITHOUT PRIOR APPROVAL FROM THE OWNER AND LANDSCAPE ARCHITECT.
D. RUN CONTROL WIRES IN SAME TRENCH AS MAINLINE WHERE POSSIBLE.
E. INSTALL 12"X12"X12" CONCRETE THRUST BLOCKS AT ALL CHANGES IN DIRECTION OF PRESSURE MAINLINE (45'S, 90'S, TEES, ETC.) AND AT ALL TERMINAL POINTS.
F. REFER TO STRUCTURAL DETAILS FOR TRENCHING NEAR FOOTINGS.

LEGEND
1. FINISH GRADE
2. CLEAN BACKFILL-90% COMPACTION-SEE SPECS.
3. NON-PRESSURE LATERAL LINE (SNAKE IN TRENCH)
4. GREEN COATED TRACER WIRE
5. PRESSURE MAINLINE (SNAKE IN TRENCH)
6. CONTROL WIRES- IN CONDUIT/ TAPE TO MAINLINE AS NOTED PER SPECS. INSTALL BELOW MAINLINE.
7. UNDISTURBED NATIVE SOIL
8. SAND BACKFILL OR SCREENED NATIVE AS ALLOWED BY LANDSCAPE ARCHITECT.
9. 6" WIDE DETECTABLE WARNING TAPE

C COMBINATION AIR/ VACUUM RELIEF

SCALE: NO_SCALE

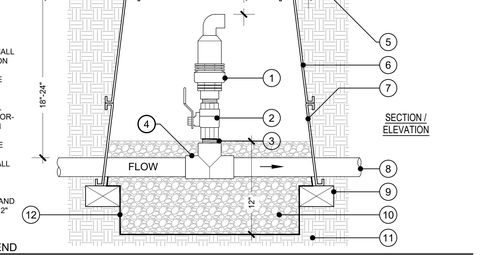

LEGEND
1. AIR RELEASE VALVE PER IRRIGATION LEGEND
2. BALL VALVE: NIBCO T-585-70-66
3. SCH 80 PVC NIPPLE, LENGTH AS NEEDED
4. SCH 80 PVC TEE WITH 2" THREADED OUTLET
5. FINISH GRADE.
6. RECTANGULAR PLASTIC VALVE BOX WITH LOCKING LID (RAINBIRD VB-STD-H) HEAT BRAND "ARV" ON LID IN 2" HIGH BLOCK LETTERS
7. RECTANGULAR PLASTIC VALVE BOX EXTENSIONS (RAINBIRD VB-STD-B)
8. MAINLINE PIPING PER IRRIGATION LEGEND
9. COMMON BRICK SUPPORTS (4 REQUIRED)
10. FILL BASE OF BOX WITH PEA GRAVEL
11. NATIVE SOIL
12. FILTER FABRIC - COVER ALL BOX HOLES
* 1/2" IN TURF AREAS, 1" IN SHRUB AREAS

D GATE VALVE

SCALE: NO_SCALE

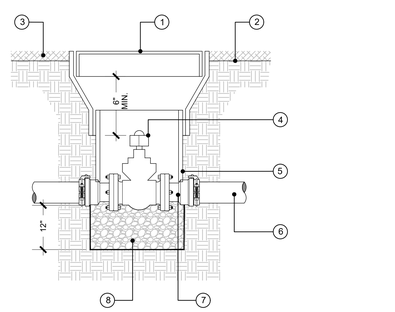

LEGEND
1. 12" ROUND PLASTIC VALVE BOX
2. FINISHED GRADE.
3. MULCH PER PLANTING PLAN.
4. FLANGED GATE VALVE WITH SQ. NUT
5. PVC EXTENSION (SIZE AS REQUIRED).
6. MAINLINE PER IRRIGATION PLAN
7. LEEMCO #SR-FB SELF RESTRAINED FLANGE ADAPTER WITH BELL END - SIZE PER VALVE AND MAINLINE PIPING (2 REQUIRE
8. PEA GRAVEL

IDENTIFICATION STAMP
DIV. OF THE STATE ARCHITECT
APP: 03-122664 INC:
REVIEWED FOR
SS ☑ FLS ☑ ACS ☑
DATE: 05/12/2023

pjhm architects
LA Phone: 213.278.0172 • Web: pjhm.com
LICENSED ARCHITECT RONALD W. RINGSTROM NO. C15585 REN.: 02/25 STATE OF CALIFORNIA
BPA LANDSCAPE ARCHITECTS
BRANDON PETRUNIO & ASSOCIATES, INC.
LA Office: 837 Traction Avenue, #410, Los Angeles, CA 90013 • SD Phone: 760.730.5527
Design Studio: 301 N. San Dimas Ave., San Dimas, CA 91773
OC Office: 24461 Ridge Route Drive #100, Laguna Hills, CA 92653 • OC Phone: 949.496.6191
T: (424) 235-8940, M: (951) 312-9943, E: brandon@bpalas.com
LICENSED LANDSCAPE ARCHITECT BRANDON PETRUNIO No. 6559 Signature 01/31/2025 Renewal Date 03/31/2023 Date STATE OF CALIFORNIA
SD Office: 804 Pier View Way #103, Oceanside, CA 92054 • SD Office: 949.496.6191

HIGHLAND HIGH SCHOOL
50M POOL & AQUATICS CENTER
KERN HIGH SCHOOL DISTRICT

LANDSCAPE IRRIGATION DETAIL SHEET 1
SITE

LID.1

EXISTING IRRIGATION NOTES

1. THE CONTRACTOR MUST FAMILIARIZE HIMSELF WITH THE EXISTING IRRIGATION AND PLANTING ON PROPERTY. ANY DAMAGE OR ADJUSTMENTS REQUIRED INCLUDING REPLACING OR RELOCATING IRRIGATION LINES, HEADS, VALVES, WIRES OR ANY UTILITY THAT OCCURS ON THE PARCEL DUE TO THE CONSTRUCTION OF THIS PROJECT IS THE SOLE RESPONSIBILITY OF THE CONTRACTOR AND SHALL BE PERFORMED AT NO ADDITIONAL COST TO THE OWNER. THE OWNER'S REPRESENTATIVE MUST REVIEW ANY REQUIRED MODIFICATIONS TO THESE AREAS PRIOR TO COMMENCING WORK. THE CONTRACTOR MUST NOTIFY THE OWNER'S AUTHORIZED REPRESENTATIVE OF THESE CONDITIONS OR ANY DISCREPANCIES PRIOR TO COMMENCING WORK.

2. CONTRACTOR SHALL VERIFY ALL SITE CONDITIONS, PROPERTY LINES, DIMENSIONS, ETC. PRIOR TO COMMENCING WORK. ALL EXISTING IRRIGATION SYSTEMS SHALL BE VERIFIED IN THE FIELD AT START OF CONSTRUCTIONS. ALL EXISTING MAINLINES, RCVS, BACKFLOW DEVICES, CONTROLLERS, METERS, SERVICE LINES, ETC. SHALL BE VERIFIED IN FIELD. ALL EXISTING IRRIGATION EQUIPMENT SHALL BE CLEARLY INDICATED INCLUDING SIZES AND MODEL NUMBERS TO SCALE ON AN ACCURATE BASE DRAWING AND SUBMITTED AS A SHOP DRAWING. SAID SHOP DRAWING SHALL BE SUBMITTED TO THE LANDSCAPE ARCHITECT, AND OWNER'S AUTHORIZED REPRESENTATIVE FOR REVIEW AND APPROVAL. NOTIFY THE OWNER'S AUTHORIZED REPRESENTATIVE IMMEDIATELY IF ANY DISCREPANCIES ARE FOUND. NO WORK SHALL PROCEED WITHOUT APPROVAL OF SAID SHOP DRAWINGS.

3. ALL EQUIPMENT LOCATIONS AND PIPE ROUTING SHALL BE STAKED IN FIELD FOR REVIEW AND APPROVAL PRIOR TO INSTALLATION. ALL LAYOUT SHALL BE AS APPROVED BY, LANDSCAPE ARCHITECT, AND OWNER'S AUTHORIZED REPRESENTATIVE PRIOR TO INSTALLATION. NO EQUIPMENT SHALL BE INSTALLED WITHOUT APPROVAL OF LAYOUT.

4. CONTRACTOR SHALL BE RESPONSIBLE FOR COMPLETE INSTALLATION OF PROPOSED IRRIGATION EQUIPMENT AND RELATED EQUIPMENT, INCLUDING BUT NOT LIMITED TO R.C.V. CONTROL WIRES, ELECTRICAL WIRES, CONDUIT, REMOTE CONTROL VALVES, ETC. ALL LAYOUT AND LOCATIONS SHALL BE CONFIRMED WITH OWNER'S AUTHORIZED REPRESENTATIVE PRIOR TO COMMENCING WORK.

5. CONTRACTOR SHALL BE RESPONSIBLE FOR THE COMPLETE REMOVAL AND DISPOSAL OF ALL EXISTING IRRIGATION EQUIPMENT AFFECTED BY THE PROPOSED IRRIGATION IMPROVEMENTS. CONTRACTOR SHALL VERIFY ALL EQUIPMENT TO BE REMOVED AND DISPOSED OF IN FIELD PRIOR TO COMMENCING WORK.

6. CONTRACTOR SHALL BE RESPONSIBLE FOR REPAIR/MODIFICATION OF ALL ADJACENT IRRIGATION SYSTEM EQUIPMENT THAT IS AFFECTED BY PROPOSED IRRIGATION IMPROVEMENTS. CONTRACTOR SHALL REPAIR SAID SYSTEMS TO A LIKE NEW MANNER, PROVIDING COMPLETE 100% HEAD TO HEAD COVERAGE IN ALL AREAS WITH SYSTEM LAYOUT AS APPROVED BY THE OWNER'S AUTHORIZED REPRESENTATIVE. CONTRACTOR SHALL CONFIRM ALL AREAS REQUIRING MODIFICATION WITH THE OWNER'S AUTHORIZED REPRESENTATIVE PRIOR TO BIDDING WORK AND PRIOR TO COMMENCING WORK.

7. CONTRACTOR SHALL ADJUST AND CAP OFF EXISTING ADJACENT IRRIGATION SYSTEM AS REQUIRED. SYSTEM SHALL PROVIDE COMPLETE 100% HEAD TO HEAD COVERAGE IN ALL AREAS AS APPROVED BY OWNER'S AUTHORIZED REPRESENTATIVE. ALL LAYOUT SHALL BE CONFIRMED WITH OWNER'S AUTHORIZED REPRESENTATIVE PRIOR TO COMMENCING WORK.

8. CONTRACTOR SHALL REFER TO CORRESPONDING ON-SITE WATER AND SEWER PLAN FOR UNDERLYING WATERLINES, EASMENTS, AND OTHER RELATED EQUIPMENT. CONTRACTOR SHALL VERIFY ALL EXISTING SITE CONDITIONS IN FIELD WITH OWNERS AUTHORIZED REPRESENTATIVE PRIOR TO COMMENCING WORK.

9. CONTRACTOR SHALL BE RESPONSIBLE FOR ALL REPAIRS TO EXISTING IRRIGATION, LANDSCAPE AND HARDSCAPE DAMAGED BY NEW CONSTRUCTION AT NO ADDITIONAL COST TO THE OWNER.

10. CONTRACTOR SHALL MEET WITH THE OWNER PRIOR TO BEGINNING DEMOLITION OR ANY OTHER WORK, AND WALK SITE TO LOCATE EXISTING CONTROLLER AND LINES AND OTHER IRRIGATION TO BE PROTECTED IN PLACE.

11. CONTRACTOR SHALL PROVIDE FOR THE IRRIGATION OF EXISTING PLANT MATERIAL THROUGHOUT THE CONSTRUCTION PROCESS. ANY DAMAGE DUE TO CONSTRUCTION SHALL BE REPAIRED IMMEDIATELY TO PREVENT ANY LAPSE IN IRRIGATION OF THE EXISTING PLANT MATERIAL. ANY PLANT MATERIAL AND/OR IRRIGATION DAMAGED AS PART OF CONSTRUCTION SHALL BE REPAIRED TO A LIKE NEW CONDITION AS PART OF CONTRACT.

12. ANY EXISTING IRRIGATION CONTROL VALVES CONNECTED TO THE EXISTING CONTROLLER SHALL BE RECONNECTED TO THE NEW CONTROLLER. CONFIRM PROPER CONTROLLER OPERATION AND INSTALLATION WITH OWNER'S AUTHORIZED REPRESENTATIVE PRIOR TO COMMENCING WORK AND UPON COMPLETION OF WORK.

13. CONTRACTOR SHALL BE RESPONSIBLE FOR THE COMPLETE ADJUSTMENT/MODIFICATION OF EXISTING IRRIGATION SYSTEM WITHIN THIS AND OTHER AREAS AFFECTED BY THE PROPOSED IMPROVEMENTS. ALL LAYOUT SHALL BE CONFIRMED WITH OWNER'S AUTHORIZED REPRESENTATIVE PRIOR TO COMMENCING WORK.

14. NO DISRUPTION OF THE EXISTING IRRIGATION SYSTEMS WATERING WILL BE ALLOWED DURING CONSTRUCTION. ALL ADJACENT SYSTEM SHALL MAINTAIN AUTOMATIC PROGRAMMED WATERING SCHEDULES THROUGHOUT CONSTRUCTION.

15. CONTRACTOR SHALL OBTAIN EXISTING IRRIGATION AS-BUILT RECORD DRAWINGS FOR ADJACENT IRRIGATED AREAS PRIOR TO STARTING WORK. ALL EXISTING IRRIGATION EQUIPMENT LOCATION, SIZES, AND CONDITIONS SHALL BE VERIFIED IN FIELD WITH OWNER'S AUTHORIZED REPRESENTATIVE AT START OF WORK.

16. WHENEVER ROOTS OF EXISTING TREES ARE ENCOUNTERED DURING TRENCHING OPERATIONS, THE CONTRACTOR SHALL REROUTE MAIN LINE TRENCHES. DO NOT CUT ROOTS OVER 1" IN DIAMETER. ALL CUTS SHALL BE A CLEAN SHARP CUT. IF TRENCHING IS REQUIRED, THE CONTRACTOR SHALL HAND DIG THE TRENCHES TAKING CARE NOT TO DAMAGE ROOTS. NO MECHANICAL TRENCHING WITHIN THE DRIPLINE OF THE EXISTING TREE WILL BE ALLOWED. PROTECT ALL ROOTS EXPOSED TO SUNLIGHT WITH MOIST BURLAP UNTIL COVERED WITH SOIL.

GENERAL IRRIGATION NOTES

1. NOTIFY THE OWNER'S AUTHORIZED REPRESENTATIVE AND THE CITY/ COUNTY INSPECTORS (PLANNING, BUILDING, WATER HEALTH, ETC) 48 HOURS PRIOR TO COMMENCEMENT OF WORK TO COORDINATE PROJECT INSPECTION SCHEDULES, AND CONFIRM ANY OUTSTANDING PERMITS OR SUBMITTALS. COORDINATE WITH OWNERS REP AND LANDSCAPE ARCHITECT ANY OUTSTANDING ITEMS.

2. ALL DIMENSIONS & CONDITIONS SHALL BE VERIFIED BY THE CONTRACTOR ON THE JOB SITE. ANY DISCREPANCIES OR OMISSIONS SHALL BE BROUGHT TO THE LANDSCAPE ARCHITECTS AND OWNERS REPRESENTATIVE ATTENTION PRIOR TO COMMENCEMENT OF WORK.

3. IT IS THE RESPONSIBILITY OF THE IRRIGATION CONTRACTOR TO FAMILIARIZE HIMSELF WITH ALL GRADE DIFFERENCES, SLOPES, LOCATION OF WALLS, CURBS, ETC. COORDINATE ALL WORK WITH THE GENERAL CONTRACTOR AND OTHER SUB-CONTRACTORS FOR LOCATION OF PIPE SLEEVES THROUGH WALLS AND FOOTINGS, UNDER ROADS, PAVING AND STRUCTURES.

4. THE IRRIGATION DESIGN SHOWN IN THESE DOCUMENTS ARE INTENDED TO BE GENERALLY DIAGRAMMATIC. ALL IRRIGATION EQUIPMENT I.E PIPE, VALVES, ETC. SHOWN WITHIN PAVED AREAS ARE FOR PLAN CLARIFICATION ONLY AND SHALL BE INSTALLED WITHIN PLANTING AREAS WHEREVER POSSIBLE UNLESS WRITTEN AUTHORIZATION IS RECEIVED PRIOR TO PLACEMENT. AVOID ANY CONFLICTS BETWEEN THE SPRINKLER SYSTEM, PLANTING AND ARCHITECTURAL FEATURES. MAIN LINE AND LATERAL LINES MAY BE PLACED IN THE SAME TRENCH, PROVIDE MINIMUM HORIZONTAL CLEARANCE OF 4" BETWEEN PARALLEL PIPES.

5. DO NOT WILLFULLY INSTALL THE IRRIGATION SYSTEM AS INDICATED ON THE DRAWINGS WHEN IT IS OBVIOUS IN THE FIELD THAT UNKNOWN OBSTRUCTIONS, GRADE DIFFERENCES OR FIELD/PLAN DIMENSIONS EXIST AND SHOULD BE BROUGHT TO THE ATTENTION OF THE OWNER'S REPRESENTATIVE. IN THE EVENT THAT THIS NOTIFICATION IS NOT PERFORMED, THE CONTRACTOR MUST ASSUME FULL RESPONSIBILITY FOR REVISIONS NECESSARY AND ALL COSTS FOR REVISIONS NECESSARY FOR A COMPLETE INDUSTRY ACCEPTABLE WORKING SYSTEM.

6. THE IRRIGATION SYSTEM DESIGN IS BASED UPON THE MINIMUM OPERATING PRESSURE AND THE MAXIMUM FLOW DEMAND SHOWN ON THE IRRIGATION DRAWINGS AT EACH POINT OF CONNECTION. THE IRRIGATION CONTRACTOR SHALL VERIFY WATER PRESSURE PRIOR TO CONSTRUCTION. THE ACTUAL PRESSURE READING AT THE IRRIGATION POINT OF CONNECTION SHALL BE REPORTED IN WRITING TO THE OWNER'S AUTHORIZED REPRESENTATIVE AND LANDSCAPE ARCHITECT PRIOR TO START OF CONSTRUCTION. IF THE PRESSURE IS NOT IMMEDIATELY REPORTED PRIOR TO BEGINNING CONSTRUCTION, THE IRRIGATION CONTRACTOR SHALL ASSUME FULL RESPONSIBILITY FOR ALL REVISIONS TO THE IRRIGATION SYSTEM DEEMED NECESSARY BY THE OWNER'S REPRESENTATIVE/LA AND ALL COSTS ASSOCIATED WITH SAID REVISIONS.

7. THE CONTRACTOR SHALL PROVIDE ALL LABOR, MATERIALS, AND MAINTENANCE REQUIRED TO INSTALL A COMPLETE IRRIGATION SYSTEM, THAT IS OPERABLE IN AN EFFICIENT AND SATISFACTORY MANNER PROVIDING COMPLETE AND EVEN COVERAGE @ MIN 100% HEAD TO HEAD COVERAGE.

8. THE IRRIGATION CONTRACTOR MUST PERFORM AND DOCUMENT IN WRITING A PRE-JOB/ KICK-OFF MEETING WITH THE MANUFACTURER REPRESENTATIVES OF SPECIAL EQUIPMENT INCLUDING BUT NOT LIMITED TO DRIP TUBING, CONTROLLER & BOOSTER PUMP MANUFACTURER TO GO OVER SITE SPECIFIC ITEMS, LAYOUT AND RECEIVE PROPER TRAINING. IF IRRIGATION CONTRACTOR FAILS TO PERFORM REQUIRED MEETING, CONTRACTOR SHALL ASSUME FULL RESPONSIBILITY FOR ALL REVISIONS TO THE IRRIGATION SYSTEM DEEMED NECESSARY BY THE OWNER'S REPRESENTATIVE AND ALL COSTS ASSOCIATED WITH SAID REVISIONS.

9. MAINLINE PIPING BETWEEN THE POINT OF CONNECTION, METER AND BACKFLOW PREVENTER TO BE OF MATERIAL AS REQUIRED BY GOVERNING WATER DISTRICT.

10. ALL PIPES AND WIRES THAT RUN UNDER HARDSCAPE ARE TO BE SLEEVED IN SCH. 40 PVC SLEEVES ACCORDING TO PURVEYING (DISTRICT, CITY, ETC.) STANDARDS, SPECS AND AS INDICATED IN THE SLEEVING CHART UNLESS WRITTEN AUTHORIZATION IS RECEIVED PRIOR TO ELIMINATING ANY SECTIONS.

11. CONTRACTOR SHALL USE HEAVY BODY GRAY GLUE (WELD-ON 711 OR EQUAL) WITH PVC PRIMER (P-70 OR EQUAL) ON ALL GLUED JOINTS. NO RED HOT BLUE GLUE ALLOWED. TEFLON TAPE SHALL BE APPLIED TO ALL MALE THREADS AS REQUIRED BY MANUFACTURER. NO PIPE DOPE ALLOWED.

12. ALL MAINLINES SHALL ME CAPPED AND TESTED AT 150 PSI FOR SIX (6) HOURS; ALLOW 10% LOSS. ALL LATERAL LINES INCLUDING SWING JOINTS SHALL BE PRESSURE TESTED AT SYSTEM DESIGN PRESSURE FOR ONE HOUR . ANY LEAKS FOUND SHALL BE REPAIRED, BY REMOVING THE LEAKING PIPE OR FITTINGS AND REPLACING WITH NEW.

13. CONTRACTOR SHALL BE LIABLE FOR REMOVING AND RE-INSTALLING IRRIGATION EQUIPMENT, AND REPLANTING AREAS WHICH ARE DEEMED IN NON-COMPLIANCE WITH CONSTRUCTION DOCUMENT PLANS AND SPECIFICATIONS.

14. THE IRRIGATION CONTRACTOR SHALL BE RESPONSIBLE FOR FLUSHING ALL LINES AND ADJUSTING ALL HEADS FOR OPTIMUM PERFORMANCE AND TO PREVENT OVER-SPRAY ONTO UN-INTENDED AREAS (WALKS, & BUILDINGS). ADJUSTMENT SHALL INCLUDE BUT NOT LIMITED TO THE ADDITION OF "PRS" SCREENS, ADJUSTABLE ARC NOZZLES (HE VERSIONS ONLY), ADJUSTING PRESSURE REGULATOR AT THE VALVE TO BE NO GREATER THAN SPSI ABOVE THE INDICATED HEAD PRESSURE AT THE FARTHEST HEAD, FOR ADDITIONAL HEADS WHERE VERTICAL ELEMENTS IN FIELD BLOCK SPRAY PATTERN AND ADDING INLINE CHECK VALVES WHERE LOW HEAD DRAINAGE OCCURS AT NO EXTRA COST TO THE OWNER.

15. IRRIGATION CONTRACTOR SHALL NOTIFY THE LANDSCAPE ARCHITECT/ OWNERS REPRESENTATIVE MINIMUM 72 HOURS PRIOR TO ANY REQUEST OF FIELD OBSERVATIONS. FIELD OBSERVATIONS SHALL OCCUR AT THE FOLLOWING MILESTONES:
   A. COVERAGE TEST ONCE ALL IRRIGATION IS INSTALLED. NO PLANTING MAY OCCUR UNTIL REVIEW HAS BEEN COMPLETED AND IRRIGATION SYSTEM APPROVED.
   B. UPON COMPLETION OF PLANTING AND IRRIGATION FOR SUBSTANTIAL COMPLETION ISSUANCE.
   C. UPON COMPLETION OF MAINTENANCE PERIOD FOR FINAL WALK AND RELEASE OF MAINTENANCE.

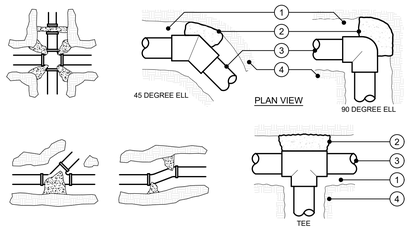

NOTES:
A. USE CONCRETE THRUST BLOCKS ON ALL SOLVENT-WELD MAINLINE PIPE AND FITTINGS.
B. USE JOINT RESTRAINTS ON ALL BELL AND GASKET MAINLINE PIPING WITH PUSH-ON FITTINGS.
C. CONCRETE THRUST BLOCKS SHALL BE A MINIMUM OF ONE CUBIC FOOT IN VOLUME. CONCRETE THRUST BLOCKS SHALL NOT ENCASE THE FITTINGS IN CONCRETE.
D. ALL MAINLINE PIPING SHALL BE INSTALLED PER THE MANUFACTURER'S INSTALLATION RECOMMENDATIONS AND PRESSURE TESTED PER THE PLAN NOTES OR SPECIFICATIONS.
E. THE DEPTH AND WIDTH OF ALL TRENCHES SHALL BE PER THE SPECIFICATIONS.
F. ALL MAINLINE PVC FITTINGS THAT ARE IN CONTACT WITH CONCRETE THRUST BLOCKS SHALL BE COVERED WITH BLACK PLASTIC PIPE WRAP.
G. ALL CONCRETE USED FOR THRUST BLOCKS SHALL BE 470-C-2000.

(S) THRUST BLOCK

SCALE: NTS

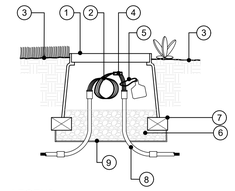

LEGEND

1. CARSON 2200 12" ROUND VALVE BOX. HEAT BRAND "PB" ONTO LID, IN 2" HIGH LETTERS
2. 36" WIRE EXPANSION LOOP TYP.
3. FINISH GRADE , PER PLAN
4. WIRE CONNECTORS
5. CONTROL WIRE LABEL, SEE SPECS
6. 3/4" ROCK, 3 CUBIC FEET
7. BRICK SUPPORT
8. PVC ELECTRICAL SWEEP IF INSTALLED IN CONDUIT
9. BIOBARRIER ROOT CONTROL FABRIC

(Q) PULL BOX

SCALE: NTS

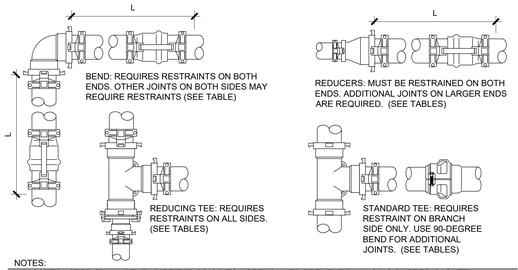

NOTES:
A. CONTRACTOR SHALL BEVEL PIPE END PRIOR TO ASSEMBLY TO PREVENT DAMAGING RUBBER GASKET.
B. CONTRACTOR SHALL APPLY SUITABLE PUSH-ON JOINT LUBRICANT I.E. SEAL LUBE BY IPS WELDON OR EQUAL.
C. CONTRACTOR SHALL USE WD-40 OR EQUAL LUBRICANT TO PREVENT THE POSSIBILITY OF GALLING OR SEIZING OF STEEL THREADS.
D. REFER TO MANU. HARDWARE SIZE AND TORQUE CHART AND PIPE-PIPE RESTRAINT CHART FOR REQUIREMENTS.
E. USE LEEMCO LB OR LPP SERIES RESTRAINTS FOR BELL AND GASKET PIPE-TO-PIPE CONNECTIONS.
F. USE LEEMCO LH SERIES RESTRAINTS FOR PVC PIPE TO DUCTILE IRON PUSH-ON FITTINGS, INCLUDING ELLS, TEES, AND VALVE TO MAINLINE CONNECTIONS (SERVICE TEES).
G. ANY FLANGED CONNECTION TO BELL AND GASKET PIPE SHALL BE MADE USING LEEMCO SR-FB SERIES SELF RESTRAINING FLANGE ADAPTERS.
H. REFER TO MANUFACTURERS RECOMMENDATIONS. MANU. RECOMMENDATIONS SUPERCEDE DETAILS.

DISTANCE CHART

REFER TO THE FOLLOWING TABLE THAT LISTS THE LENGTH (IN FEET) FOR EACH SIZE/TYPE FITTING WITHIN WHICH ALL JOINTS JUST BE RESTRAINED. ALL FITTINGS AND JOINT RESTRAINTS SHALL BE INSTALLED PER MANUFACTURERS RECOMMENDATIONS & SPECIFICATIONS.

AS AN EXAMPLE, IF YOU ARE INSTALLING A 3" MAINLINE WITH A DIRECTIONAL CHANGE OF 90°, REFER TO CHART UNDER PIPE SIZE TO 3" AND UNDER BENDS 90 YOU WILL SEE THE DISTANCE OF 11', IF THERE IS ANY JOINT (VALVE, BELL, ETC.) YOU MUST INSTALL A JOINT RESTRAINT WITHIN 11' OF THE 90° MAINLINE DIRECTIONAL CHANGE.

PIPE	BENDS				REDUCERS			DEAD END	
SIZE	11°	22°	45°	90°	1 STEP	2 STEP	3 STEP	BLIND	SERV. B.
2"	1'	1'	2'	6'	-	-	-	19'	6'
2.5"	1'	2'	4'	9'	4'	-	-	23'	10'
3"	2'	3'	6'	11'	8'	10'	-	30'	15'
4"	2'	4'	9'	20'	14'	20'	31'	45'	25'
6"	3'	6'	13'	29'	30'	40'	53'	63'	40'
8"	4'	8'	15	38'	33'	55'	63'	75'	70'
10"	5'	9'	19'	45'	36'	56'	75'	96'	90'
12"	5'	10'	21'	53'	38'	60'	83'	112'	110'

QUICK SELECTION GUIDE- PIPE-PIPE

TABLE SHOWS THE NUMBER OF ADJACENT JOINTS TO RESTRAIN...BASED ON 20' LENGTH

PIPE	BENDS		REDUCERS			DEAD END	
SIZE	45°	90°	1 STEP	2 STEP	3 STEP	BLIND	SERV. B.
2"							
2.5"						1	
3"						1	
4"		1		1	1	2	1
6"		1	1	2	2	3	1
8"		1	1	2	3	3	2
10"	1	2	1	2	3	4	2
12"	1	2	2	3	4	5	2

INSTALLATION CHART

REFER TO THE FOLLOWING TABLE WHICH LISTS THE NUMBER OF BOLTS, SIZE, AND TORQUE FOR EACH BOLT IN REFERENCE TO THE SIZE OF PIPE WHICH IS BEING RESTRAINED.

AS AN EXAMPLE, IF YOU HAVE A 3" PIPE, YOU WILL NEED 2 BOLTS THAT ARE 3/8 X 2.5" AND TIGHTEN THEM WITH A TORQUE WRENCH TO 20 FT-LBS.

PIPE SIZE	NO. BOLTS	BOLT SIZE	TORQUE FT-LBS.
2"	2	3/8" x 2.5"	20
2.5"	2	3/8" x 2.5"	20
3"	2	3/8" x 2.5"	20
4"	2	1/2" x 3"	50
6"	2	1/2" x 3.5"	50
8"	4	1/2" x 4"	50
10"	4	5/8" x 5.5"	100
12"	4	5/8" x 5.5"	100

CONTACT STEVEN KIM @ 951.461.0942, THE LEEMCO REPRESENTATIVE, FOR ALL QUESTIONS CONCERNING LEEMCO PRODUCTS. COORDINATE AN INSTALLATION CLINIC WITH STEVEN KIM PRIOR TO INSTALLING THE MAINLINE.

(R) MECHANICAL JOINT RESTRAINT

SCALE: NTS

California Water Efficient Landscape Worksheet

Reference Evapotranspiration (ET_o): 52.4 — Project Type: Non-Residential — 0.45

Hydrozone # / Planting Description[a]	Plant Factor (PF)	Irrigation Method	Irrigation Efficiency (IE)	ETAF (PF/IE)	Landscape Area (Sq. Ft.)	ETAF x Area	Estimated Total Water Use (ETWU)
Regular Landscape Areas							
Station B1 / Turf	0.5	Overhead	0.75	0.67	2,682	1,788	58,089
Station B2 / Low	0.3	Drip	0.81	0.37	-	-	-
Station B3 / Low	0.3	Overhead	0.75	0.40	310	124	4,029
Station B4 / Turf	0.5	Overhead	0.75	0.67	283	189	6,129
Station B5 / Low	0.3	Overhead	0.75	0.40	522	209	6,783
-	0.3	Drip	0.81	0.37	-	-	-
Station C1 / Turf	0.5	Overhead	0.75	0.67	1,631	1,087	35,325
Station C2 / Shrub	0.3	Overhead	0.75	0.40	410	164	5,328
Station C3 / Turf	0.5	Overhead	0.75	0.67	1,033	689	22,373
Station C4 / Turf	0.5	Overhead	0.75	0.67	806	537	17,457
Station C5 / Shrub	0.3	Overhead	0.75	0.40	1,248	499	16,218
Station C6 / Shrub B	0.5	Drip	0.81	0.62	64	40	1,283
Station C7 / Trees	0.5	Drip	0.81	0.62	50	31	1,003
-	0.5	Overhead	0.75	0.67	-	-	-
				Totals	9,039	5,356	174,018
Special Landscape Areas							
				1.0	-	-	-
				Totals	-	-	-
						ETWU Total	174,018
						Maximum Allowed Water Allowance (MAWA) Gallons	132,147

ETAF Calculations

Regular Landscape Areas	
Total ETAF x Area	5,356
Total Area	9,039
Average ETAF	0.59

All Landscape Areas	
Total ETAF x Area	5,356
Total Area	9,039
Average ETAF	0.59

IDENTIFICATION STAMP
DIV. OF THE STATE ARCHITECT
APP: 03-122664 INC:
REVIEWED FOR
SS ☑ FLS ☑ ACS ☑
DATE: 05/12/2023

pjhm architects
LA Phone: 213.278.0172 • Web: pjhm.com

LICENSED ARCHITECT
RICHARD W. RINGOLD
No. C15585
REN. 02/25
STATE OF CALIFORNIA

BPA LANDSCAPE ARCHITECTS
BRANDON PETRUNIO & ASSOCIATES, INC.
LANDSCAPE ARCHITECTS
Design Studio: 301 N. San Dimas Ave., San Dimas, CA. 91773
Corporate Office: 837 Traction Ave., Suite 410, Los Angeles, CA. 90013
T: (424) 235-8940, M: (951) 312-9943, E: brandon@bpalas.com
LA Office: 837 Traction Avenue, #410, Los Angeles, CA 90013 • SD Phone: 760.730.5527

LICENSED LANDSCAPE ARCHITECT
No. 5654
RENEWAL 01/31/2025
Signature
01/31/2025
Renewal Date
05/11/2023
Date
STATE OF CALIFORNIA

HIGHLAND HIGH SCHOOL
50M POOL & AQUATICS CENTER

KERN HIGH SCHOOL DISTRICT

OC Office: 24461 Ridge Route Drive #100, Laguna Hills, CA 92653 • SD Office: 804 Pier View Way #103, Oceanside, CA 92054
OC Phone: 949.496.6191 • SD Phone: 760.730.5527

LANDSCAPE IRRIGATION DETAIL
SHEET 2 - NOTES AND CALCS.

SITE

LID.2

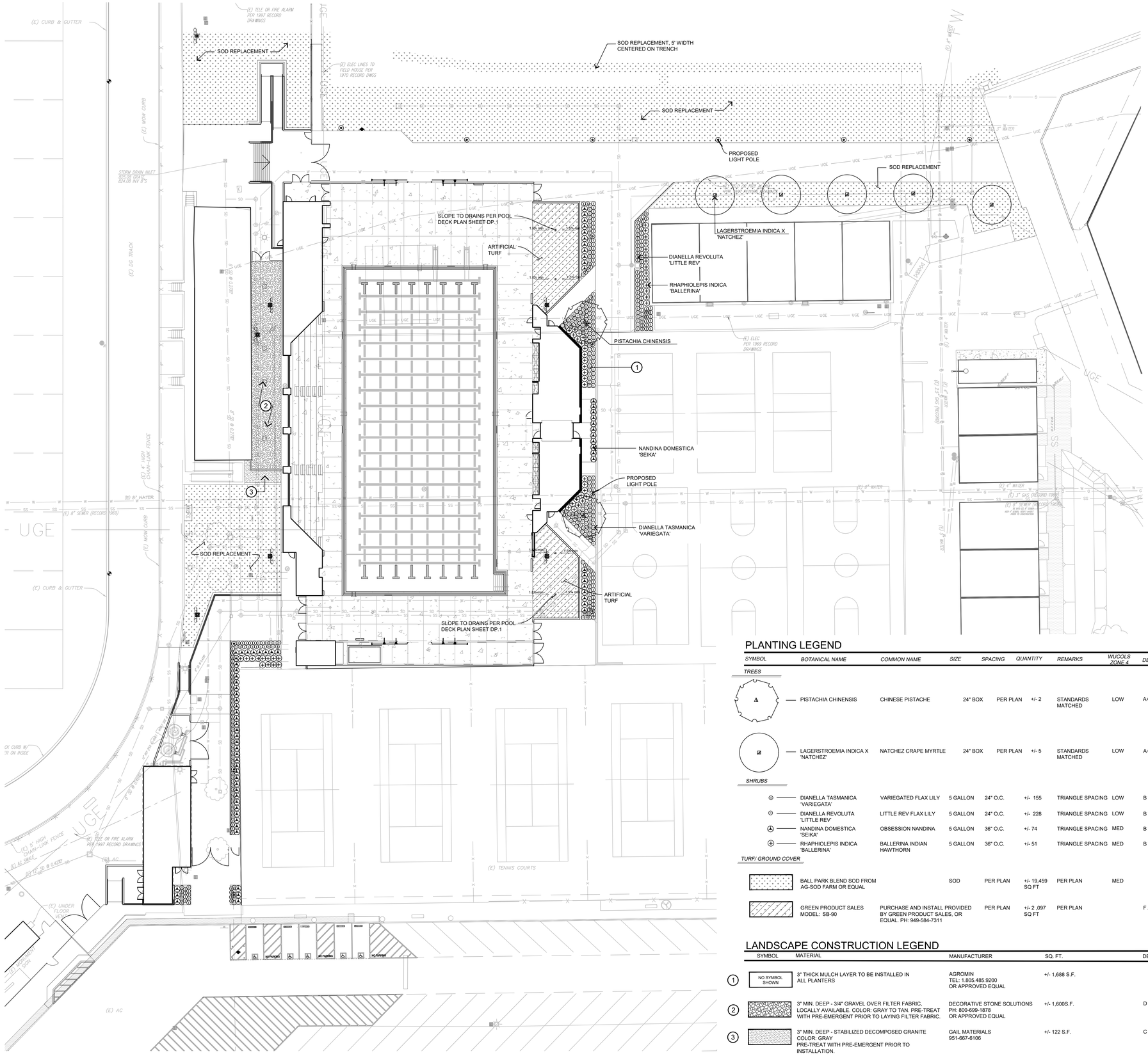

PLAN VIEW

SCALE 1" = 20'-0"

PLANTING LEGEND

SYMBOL	BOTANICAL NAME	COMMON NAME	SIZE	SPACING	QUANTITY	REMARKS	WUCOLS ZONE 4	DETAIL
TREES								
	PISTACHIA CHINENSIS	CHINESE PISTACHE	24" BOX	PER PLAN	+/- 2	STANDARDS MATCHED	LOW	A+E / LPD.1
	LAGERSTROEMIA INDICA X 'NATCHEZ'	NATCHEZ CRAPE MYRTLE	24" BOX	PER PLAN	+/- 5	STANDARDS MATCHED	LOW	A+E / LPD.1
SHRUBS								
	DIANELLA TASMANICA 'VARIEGATA'	VARIEGATED FLAX LILY	5 GALLON	24" O.C.	+/- 155	TRIANGLE SPACING	LOW	B / LPD.1
	DIANELLA REVOLUTA 'LITTLE REV'	LITTLE REV FLAX LILY	5 GALLON	24" O.C.	+/- 228	TRIANGLE SPACING	LOW	B / LPD.1
	NANDINA DOMESTICA 'SEIKA'	OBSESSION NANDINA	5 GALLON	36" O.C.	+/- 74	TRIANGLE SPACING	MED	B / LPD.1
	RHAPHIOLEPIS INDICA 'BALLERINA'	BALLERINA INDIAN HAWTHORN	5 GALLON	36" O.C.	+/- 51	TRIANGLE SPACING	MED	B / LPD.1
TURF/ GROUND COVER								
	BALL PARK BLEND SOD FROM AG-SOD FARM OR EQUAL		SOD	PER PLAN	+/- 19,459 SQ FT	PER PLAN	MED	
	GREEN PRODUCT SALES MODEL: SB-90	PURCHASE AND INSTALL PROVIDED BY GREEN PRODUCT SALES, OR EQUAL. PH: 949-584-7311	PER PLAN		+/- 2 ,097 SQ FT	PER PLAN		F / LPD.1

LANDSCAPE CONSTRUCTION LEGEND

	SYMBOL	MATERIAL	MANUFACTURER	SQ. FT.	DETAIL/SHEET
1	NO SYMBOL SHOWN	3" THICK MULCH LAYER TO BE INSTALLED IN ALL PLANTERS	AGROMIN TEL: 1.805.485.9200 OR APPROVED EQUAL	+/- 1,688 S.F.	
2		3" MIN. DEEP - 3/4" GRAVEL OVER FILTER FABRIC, LOCALLY AVAILABLE. COLOR: GRAY TO TAN. PRE-TREAT WITH PRE-EMERGENT PRIOR TO LAYING FILTER FABRIC.	DECORATIVE STONE SOLUTIONS PH: 800-699-1878 OR APPROVED EQUAL	+/- 1,600S.F.	D / LPD.1
3		3" MIN. DEEP - STABILIZED DECOMPOSED GRANITE COLOR: GRAY PRE-TREAT WITH PRE-EMERGENT PRIOR TO INSTALLATION.	GAIL MATERIALS 951-667-6106	+/- 122 S.F.	C / LPD.1

PLANTING LEGEND AND NOTE REFERENCE:

- REFER TO SHEET LPD.1 FOR PLANTING NOTES.
- REFER TO SHEET LP.1 FOR PLANTING LEGEND.

N W E S

20' 10' 0' 20' 40' 60'

SCALE: 1" : 20'-0"
GRAPHIC SCALE

IDENTIFICATION STAMP
DIV. OF THE STATE ARCHITECT
APP: 03-122664 INC:
REVIEWED FOR
SS ☑ FLS ☑ ACS ☑
DATE: 05/12/2023

pjhm architects

LICENSED ARCHITECT
RANDALL W. RIMMER
NO. C15585
REN. 02/25
STATE OF CALIFORNIA

BPA LANDSCAPE ARCHITECTS
BRANDON PETRUNIO & ASSOCIATES, INC.
LANDSCAPE ARCHITECTS
Design Studio: 301 N. San Dimas Ave., San Dimas, CA. 91773
Corporate Office: 1900 Thunderbird Lane, Encinitas, CA. 92024
T: (424) 235-8940, M: (951) 312-9943, E: brandon@bpalas.com

LICENSED LANDSCAPE ARCHITECT
BRANDON PETRUNIO
Signature
01/31/2025
Renewal Date
01/31/2023
Date
STATE OF CALIFORNIA

HIGHLAND HIGH SCHOOL
50M POOL & AQUATICS CENTER

KERN HIGH SCHOOL DISTRICT

SITE

LANDSCAPE PLANTING PLAN

LP.1

OC Office: 24461 Ridge Route Drive #100, Laguna Hills, CA 92653 • SD Phone: 760.730.5527 • LA Office: 837 Traction Avenue, #410, Los Angeles, CA 90013 • LA Phone: 213.278.0172 • Web: pjhm.com
OC Phone: 949.496.6191 • SD Office: 804 Pier View Way #103, Oceanside, CA 92054

PLANTING NOTES

1. NOTIFY THE OWNER'S AUTHORIZED REPRESENTATIVE AND THE CITY/ COUNTY INSPECTORS (PLANNING, BUILDING, WATER,HEALTH, ETC) 48 HOURS PRIOR TO COMMENCEMENT OF WORK TO COORDINATE PROJECT INSPECTION SCHEDULES, AND CONFIRM ANY OUTSTANDING PERMITS OR SUBMITTALS. COORDINATE WITH OWNERS REP AND LANDSCAPE ARCHITECT ANY OUTSTANDING ITEMS.

2. VERIFY ALL EXISTING CONDITIONS, DIMENSIONS AND ELEVATIONS BEFORE PROCEEDING WITH THE WORK. REPORT DISCREPANCIES OR OMISSIONS IN THE DRAWINGS OR BETWEEN THE DRAWINGS AND ACTUAL FIELD CONDITIONS TO THE OWNERS REPRESENTATIVE AND LANDSCAPE ARCHITECT. CORRECTED DRAWINGS OR INSTRUCTION SHALL BE ISSUED PRIOR TO THE CONTINUATION OF THIS WORK. CONTRACTOR ASSUMES FULL RESPONSIBILITY/LIABILITY FOR ALL NECESSARY CORRECTIONS DUE TO FAILURE TO REPORT KNOWN DISCREPANCIES.

3. LOCATE ALL EXISTING UTILITIES WHETHER SHOWN HEREON OR NOT AND PROTECT THEM FROM DAMAGE. NOTIFY THE OWNER'S REPRESENTATIVE IMMEDIATELY AND ASSUME FULL RESPONSIBILITY FOR EXPENSE OF REPAIR OR REPLACEMENT IN CONJUNCTION WITH DAMAGED UTILITIES. ADJUST LOCATION OF ALL TREES TO BE PLANTED AT LEAST 5' FROM ANY UNDERGROUND UTILITY SUCH AS SEWER, GAS, STORM DRAIN, ELECTRICAL, CABLE, OR TELEPHONE.

4. LOCATION OF N.I.C. CONSTRUCTION ELEMENTS SUCH AS LIGHTS, SIGNS, VENTS, HYDRANTS, TRANSFORMERS, ETC, ARE APPROXIMATE. NOTIFY THE LANDSCAPE ARCHITECT IMMEDIATELY SHOULD THE LOCATION OF THESE ITEMS INTERFERE WITH THE PROPER EXECUTION OF WORK.

5. IRRIGATION SYSTEM SHALL BE INSTALLED AND OPERATIONAL PRIOR TO PLANT MATERIAL WITH THE EXEMPTION OF 24"+ BOX TREES. CONTRACTOR SHALL HAND WATER MATERIAL IF IRRIGATION SYSTEM WILL NOT BE FUNCTIONAL WITHIN 48 HOUR PERIOD AT NO COST TO OWNER.

6. PROVIDE PRE-PLANT WEED CONTROL IN ALL PROPOSED PLANTER AREAS, PER SPECIFICATIONS, PRIOR TO START OF PLANTING. USE A NON-SELECTIVE SYSTEMIC CONTACT HERBICIDE, APPLIED PER MANUFACTURER'S RECOMMENDATIONS AND LEAVE SPRAYED PLANTS INTACT FOR AT LEAST 14 DAYS BEFORE REMOVING BY MOWING OR GRUBBING. APPLY WATER AND FERTILIZER BY IRRIGATION OR BY HAND FOR 10 DAYS AS REQUIRED TO ACHIEVE WEED GERMINATION, AND THEN RE-APPLY CONTACT HERBICIDES PER ABOVE. REPEAT AS REQUIRED TO ELIMINATE ALL WEEDS PRIOR TO PROCEEDING WITH PLANTING OPERATIONS. MINIMUM 2 APPLICATIONS.

7. ONCE ROUGH GRADES HAVE BEEN ESTABLISHED IN PLANTING AREAS, SOIL SAMPLES SHALL BE TAKEN @ RATE OF 1 SAMPLE PER ACRE. SAMPLES SHALL BE TESTED BY AN APPROVED SOILS LABORATORY FOR STANDARD AGRICULTURAL SUITABILITY ANALYSIS AND SOILS MANAGEMENT REPORT TO BE PROVIDED. TAKE TWO SAMPLES AT EACH LOCATION. (1) GROUND LEVEL TO 6" DEEP, (2) 24" TO 36" DEEP. EACH SAMPLE SHALL CONTAIN APPROXIMATELY 1 QUART OF SOIL TO BE LABELED PER LOCATION AND DEPTH. SUBMIT SOIL REPORT TO LANDSCAPE ARCHITECT FOR APPROVAL PRIOR TO IMPLEMENTATION. INSTALL SOIL PREPARATION AND BACK FILL MIX TO CONFORM TO APPROVED RECOMMENDATIONS. PROVIDE (2) TWO FOLLOW-UP TESTS POST INCORPORATION FOR COMPLIANCE VERIFICATION. ANY FURTHER DEFICIENCIES SHALL BE INCORPORATED AT NO COST TO OWNER AND SUBSEQUENT REPORT PROVIDED UNTIL SOIL IS DEEMED ACCEPTABLE BY LAB.

8. OBTAIN ALL SOIL FOR LANDSCAPE PLANTING AREAS OR BERMS AND RAISED PLANTER BACKFILL (UNLESS OTHERWISE NOTED) FROM ON-SITE EXCAVATIONS IF DEEMED ACCEPTABLE BY SOILS LAB. SHOULD IMPORT SOIL BE NECESSARY, SUBMIT IMPORT SOIL TESTING RESULTS FOR APPROVAL PRIOR TO IMPORTATION. SOIL SHALL BE SANDY LOAM, BE DEEMED VIABLE FOR MATERIAL BY SOILS LAB TEST REPORT. SOILS MAY NOT CONTAIN TOXIC CHEMICALS OR ELEMENTS WHICH MAY INHIBIT OR RETARD NORMAL PLANT GROWTH AND BE VIABLE WITH MINIMAL POST DELIVERY MODIFICATION.

9. REMOVE ALL WEED, ROCKS OVER 2" DIAMETER, DEBRIS AND OTHER EXTRANEOUS MATERIALS FROM THE UPPER 6" OF SOIL AND ALL BACKFILL AND DISPOSE OF OFFSITE IN A LEGAL MANNER.

10. ENSURE THAT ROUGH GRADING HAS BEEN CERTIFIED BY CIVIL ENGINEER AND THAT CIVIL ENGINEER OR OWNER'S AUTHORIZED REPRESENTATIVE HAS APPROVED FINE GRADING TO $\frac{1}{10}$TH OF A FOOT PRIOR TO BEGINNING SOIL PREPARATION OPERATIONS. PROVIDE FOR INCLUSION OF ALL AMENDMENTS, SETTLING, ETC. IN DETERMINATION OF FINAL GRADES. ASSURE POSITIVE DRAINAGE IN ALL PLANTING AREAS, AND WATER TO BE DIRECTED AWAY FROM STRUCTURES AND HAZARDOUS CONDITIONS.

11. CONTRACTOR RESPONSIBLE TO LOCATE AND TAG ALL PLANT MATERIAL. MATERIAL SHALL BE IN CONFORMANCE WITH PLANTING PLAN DESCRIPTIONS, SPECIFICATIONS, AND AS OUTLINED IN ANSI Z60.1. ALL PLANT MATERIAL IS SUBJECT TO REVIEW AND APPROVAL PRIOR TO INSTALLATION. PROVIDE PHOTOS OF REPRESENTATIVE EXAMPLES OF EACH TAGGED BLOCK TO LANDSCAPE ARCHITECT MINIMUM 14 DAYS PRIOR TO ANTICIPATED DELIVERY. PHOTOS SHALL INCLUDE A PERSON AND/OR POLE WITH CLEAR 1' INTERVAL MARKINGS FOR SCALE PURPOSES. LANDSCAPE ARCHITECT MAY OPT TO REVIEW MATERIAL AT NURSERY AT THEIR DISCRETION. MATERIAL DELIVERED TO THE SITE MAY BE REJECTED BASED ON UNHEALTHY APPEARANCE OR NON-CONFORMANCE EVEN IF PREVIOUSLY REVIEWED AND APPROVED.

12. TREES SHALL BE STRAIGHT AND OF UNIFORM SHAPE WITHOUT DAMAGED, CROOKED OR MULTIPLE LEADERS. TREES WITH ABRASIONS OF THE BARK, SUN SCALDS, DISFIGURING KNOTS OR FRESH CUTS OF LIMBS OVER 1/2 INCH WHICH HAVE NOT BEEN PRUNED AND PAINTED OR COMPLETELY CALLOUSED, WILL NOT BE ACCEPTED. NURSERY STOCK SHALL HAVE GROWN IN SPECIFIED CONTAINER SIZE FOR A MINIMUM TIME TO FULLY ROOT INSIDE SAID CONTAINER.

13. FINAL LOCATION OF ALL PLANT MATERIALS SHALL BE SUBJECT TO THE APPROVAL OF THE OWNER'S AUTHORIZED REPRESENTATIVE AND LANDSCAPE ARCHITECT.

14. THE PLANTING PLANS ARE ONLY ACCURATE FOR PLANTING LOCATION AND TYPES. PLANTING QUANTITIES ARE GIVEN FOR CONVENIENCE ONLY, CONTRACTOR SHALL VERIFY ALL QUANTITIES BY PLAN CHECK AND BASED UPON ACTUAL FIELD CONDITIONS. THE PLANTING LEGEND IS ACCURATE ONLY FOR PLANT TYPE AND MINIMUM SIZE. IN THE EVENT OF A DISCREPANCY, THE CONTRACTOR SHALL ADJUST THE QUANTITIES OF THE SMALLEST PLANT SIZE SPECIFIED IN THE LEGEND TO CONFORM WITH THE QUANTITIES REQUIRED BY THE PLAN AND ACTUAL FIELD CONDITIONS. PLANT SYMBOLS AND SPECIFIED SPACING SHALL TAKE PRECEDENCE.

15. INSTALL GROUND COVER AND/OR SHRUB MASSES WITH TRIANGULAR SPACING UNLESS OTHERWISE INDICATED. AT EDGES OF PLANTING AREAS, THE CENTER LINE OF THE LAST ROW OF SHRUBS AND/OR GROUND COVER SHALL BE LOCATED AT ONE-HALF THE SPECIFIED ON CENTER SPACING FROM EDGE.

16. REMOVE ALL NURSERY STAKES AND ESPALIER RACKS IMMEDIATELY AFTER INSTALLATION UPON PROVIDING SUPPORT PER PLAN UNLESS OTHERWISE CONFIRMED IN WRITING WITH OWNER/ LANDSCAPE ARCHITECT.

17. DURING THE LENGTH OF THE GUARANTEE PERIOD, THE CONTRACTOR SHALL BE RESPONSIBLE FOR PROPER STAKING AND/OR GUYING OF TREES TO ENSURE STABILITY.

18. MULCH ALL LANDSCAPE AREAS (EXCLUDING TURF AND BIO-RETENTION BASIN BOTTOMS) WITH A 3" DEEP LAYER OF 1/2"-1 1/2" FOREST FLOOR MULCH BY AGUINAGA GREEN OR APPROVED EQUAL, AT THE CONCLUSION OF PLANTING OPERATIONS. MATERIAL SHALL BE SPREAD EVENLY,RAKED SMOOTH AND THOROUGHLY WETTED TO AID IN COMPACTION. SUBMIT SAMPLE TO LANDSCAPE ARCHITECT FOR REVIEW AND APPROVAL PRIOR TO INSTALLATION. *KEEP BARK MULCH 4" CLEAR FROM BASE OF TREES, AND 3" FROM SHRUBS, GRASSES, AND SUCCULENTS.

19. CONTRACTOR IS RESPONSIBLE FOR ALL REPAIRS AND/OR REPLACEMENT OF ANY DAMAGED LANDSCAPE AREAS AND PLANT MATERIAL WITHIN AND OUTSIDE THE LIMITS OF WORK. REPLACEMENT PLANT MATERIAL MUST BE OF MATCHING SPECIES AND EQUAL SIZE; TURF SHALL BE SOD FORM. ANY REPAIRS TO TREES OR SHRUBS SHALL BE AS DIRECTED BY CERTIFIED ARBORIST HIRED BY CONTRACTOR AT NO COST TO OWNER. A REPORT SHALL BE PROVIDED ON ARBORIST LETTERHEAD AND SUBMITTED AND APPROVED BY LANDSCAPE ARCHITECT PRIOR TO COMMENCEMENT OF REPAIRS. CREDIT SHALL BE PROVIDED FOR TREES OF LESSER SIZE, WITH EXISTING TREE VALUE ESTABLISHED BY USING THE TRUNK FORMULA METHOD AS DEFINED IN THE "GUIDE FOR PLANT APPRAISAL", CURRENT EDITION AT TIME OF CALCULATION.

20. INSTALLATIONS THAT ARE ADJACENT TO OPEN SPACE, NATURALIZED SLOPES OR UNDEVELOPED LAND ARE SUBJECT TO DAMAGE BY RODENTS OR DEER AND SHALL BE TREATED WITH AN APPROPRIATE REPELLENT IN A SPRAY AND/OR TABLET FORM, WHERE ALLOWED BY CURRENT REGULATIONS. MATERIAL SUCH AS REPELLEX BY GROPOWER OR APPROVED EQUAL, THAT PROVIDES IMMEDIATE AND LONG TERM PROTECTION, SHALL BE USED.

21. INSTALL EROSION CONTROL MAT ON SLOPES 2:1 AND STEEPER (SLOPES 1:1 AND GREATER ARE TO RECEIVE BIOD-MAT 70), KEY IN MATERIAL @ TOP OF SLOPE AND SECURE WITH 12" LONG HEAVY DUTY GALVANIZED SOIL STAPLES (8" LONG NAILS MAY BE USED WHERE SOIL HARDNESS PREVENTS USE OF STAPLES) 12" O.C. HORIZONTALLY ALONG SLOPE AND 5' O.C. VERTICALLY DOWN THE SLOPE (MINIMAL TOP,MIDDLE AND TOE WHERE SHORT SLOPES APPLY). PROVIDE MINIMUM 2" OVERLAP AT TOP AND BOTTOM AND MINIMUM 6" OVERLAP ALONG SIDES OF MATERIAL.

22. ROOT BARRIERS SHALL BE INSTALLED AT ALL TREES WITHIN 6 FEET OF ANY HARDSCAPE, PAVEMENT OR CURB. ROOT BARRIERS TO BE 'UB24-2' BY DEEP ROOT CORPORATION, (800) 458-7668, INSTALLED PER MANUFACTURER'S SPECIFICATIONS. NOTE: ROOT BARRIERS SHALL NOT SURROUND OR CIRCLE THE ROOTBALL. ROOT BARRIERS INSTALLED ADJACENT TO A BIOSWALE SHALL NOT INTERFERE WITH DRAINAGE TO OR FROM THE BIOSWALE SYSTEM.

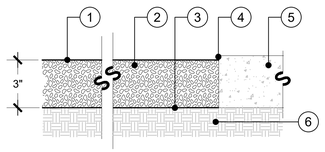

NOTES:
APPLY PRE-EMERGENT ON SUB-GRADE PRIOR TO LAYING PROPOSED MATERIALS.

LEGEND

1. FINISH GRADE
2. GRAVEL PER LEGEND
3. MIRAFI N OR EQUAL FILTER FABRIC. OVERLAP MIN 8" AND STAPLE
4. SET 1/2" MAX BELOW HARDSCAPE/ STEEL EDGE/ CONCRETE BAND
5. CONCRETE BAND/ PAVING OR STEEL EDGING (WHERE OCCURS).
6. COMPACTED SUB-GRADE (90% MIN).

D GRAVEL PLACEMENT

SCALE: NO_SCALE

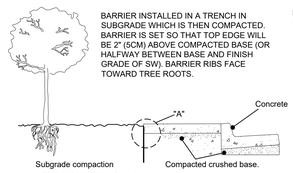

BARRIER INSTALLED IN A TRENCH IN SUBGRADE WHICH IS THEN COMPACTED. BARRIER IS SET SO THAT TOP EDGE WILL BE 2" (5CM) ABOVE COMPACTED BASE (OR HALFWAY BETWEEN BASE AND FINISH GRADE OF SW). BARRIER RIBS FACE TOWARD TREE ROOTS.

INSTALLATION SEQUENCE:
1. PREPARE BASE AND SUBGRADE
2. TRENCH TO APPROPRIATE DEPTH FOR INSTALLATION OF ROOT BARRIER SO THAT TOP OF BARRIER IS 2" (5CM) BELOW FINISH GRADE OF TOP OF SIDEWALK (OR HALFWAY BETWEEN TOP OF COMPACTED BASE AND FINISH GRADE OF SW)
3. PLACE ROOT BARRIER IN TRENCH, VERTICAL RIBS MUST FACE TOWARD TREE ROOTS.
4. BACKFILL AND COMPACT TO REQUIREMENTS.
5. PLACE FORM MATERIAL AGAINST BARRIER (IT MAY BE NAILED FROM THE OUTSIDE OF THE FORM)

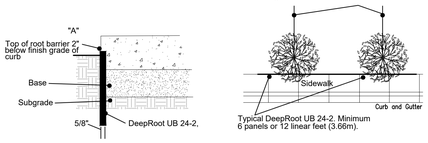

E LINEAR ROOT BARRIER

SCALE: NO_SCALE

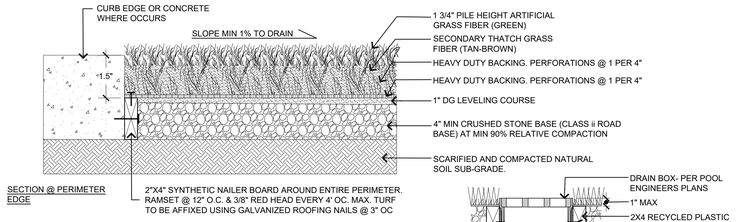

NOTES:
1. ADA COMPLIANT SYNTHETIC GRASS ACCESSIBLE SURFACE.
2. INSTALLATION TO BE COMPLETED IN ACCORDANCE WITH MANUFACTURER'S SPECIFICATIONS.
3. UTILIZE TURF NAILS OR STAPLES WHERE NEEDED TO HOLD DOWN TURF, MANDATORY WHEN PLACED ON SLOPES @ RECOMMEND RATES PER MANUFACTURER (MIN 48" OC)
4. APPLY PRE-EMERGENT TO SUB-GRADE PRIOR TO INSTALLATION.

F ARTIFICIAL TURF

SCALE: NO_SCALE

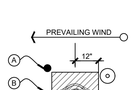

DOUBLE STAKE PLAN VIEW

LEGEND

A. BUBBLER PER IRRIGATION PLAN
B. TREE ROOTBALL
C. AERATION DEVICE PER NOTE 1 BELOW

ESTABLISHED PLANTS (21 GRAM)
FOR EACH 12-18 INCHES OF PLANT HEIGHT OR SPREAD, OR FOR EACH 1/2 INCH OF TREE TRUNK DIAMETER USE:
1. ONE TABLET FOR SLOW GROWING PLANTS
2.TWO TABLETS FOR FAST-GROWING PLANTS OR POOR SOIL SITUATIONS.

21-GRAM FERTILIZER TABLET CHART - NEW PLANTINGS

CONTAINER SIZE	1 GAL.	3 GAL.	5 GAL.	15 GAL.	24" BOX	36" BOX	48"BOX
RECOMMENDED QUANITY OF (21 G) PLANT TABLETS	1	2-3	2-3	7-10	15-24	22-36	30-48

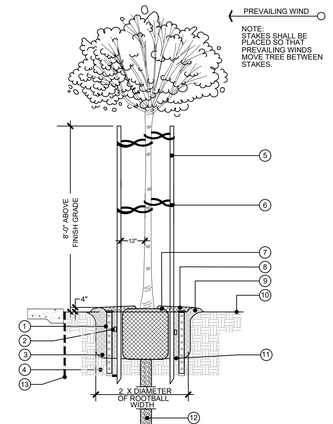

LEGEND

1. 4" PERF. PVC PIPE W/ SAND SOCK; CAP BLACK N.D.S. DRAIN GRATE & HOLD IN PLACE W/ S.S. SET SCREW. SET FLUSH W/ GRADE & 4'6" BELOW ROOTBALL
2. PLANT TABLET. REFER TO SPECS AND TO TABLET LEGEND.
3. AMENDED BACKFILL AMEND PER AGRONOMIC SOILS REPORT.
4. COMPACTED NATIVE.
5. 2"X12" PINE LODGE POLE STAKE OR APPROVED EQUAL (2 REQU.)
6. RUBBER CINCH-TIE (4 PER TREE.)
7. ROOTBALL TO BE SET 1" ABOVE FINISH GRADE.
8. 3" DEPTH OF MULCH REFER TO PLANTING LEGEND FOR TYPE.
9. 3"-4" HIGH BERM AROUND OUTSIDE OF ROOTBALL. REMOVE PRIOR TO END OF MAINTENANCE.
10. FINISH GRADE
11. PLANT PIT, SLOPE TO DRY SUMP.
12. DRY SUMP. 6" DIA. X 6' DEEP MIN, LINE W/ FILTER FABRIC FILL WITH 3/4" WASHED GRAVEL
13. INSTALL #UB24-2 ROOT BARRIER, AT ALL TREES WITHIN 6' OF HARDSCAPE, MINIMUM 12' LENGTH. INSTALLED AT EDGE OF HARDSCAPE.

NOTES:
INSTALL 3' DIAMETER RING OF MULCH @ BASE OF TREES. CONTRACTOR SHALL INCREASE DIAMETER 12" FOR EVERY ADDITIONAL SIZE OVER 24" BOX.
INSTALL ARBOR GUARDS @ BASE OF TREES IN TURF AREAS ONLY. AUGURED HOLE CAN BE OMITTED FOR AREAS PASSING PERCOLATION TESTS. CONTRACTOR SHALL TEST MULTIPLE HOLES PER APPROVED PERC. TEST METHOD.
REMOVE CONCRETE DEBRIS OR OVER-POURS AS REQ'D. TO ALLOW ROOT BARRIER TO LAY FLUSH AGAINST ADJACENT HARDSCAPE.

TREE (OPTION 2 - PERF. PIPE)

NOT TO SCALE

A TREE PLANTING

SCALE: NO_SCALE

LEGEND

1. PLANT PER LEGEND - 1 GALLON THRU 15 GALLON CONTAINER
2. SET CROWN 1/2" - 1" ABOVE SURROUNDING GRADE.
3. WATER BASIN MIN 4" DEPTH. REMOVE PRIOR TO END OF MAINTENANCE PERIOD.
4. AMENDED BACKFILL - RIP AND TILL ENTIRE PLANTING AREA TO A DEPTH OF 10" & INCORPORATE AMENDMENTS IN THE UPPER 1/3 OF PLANT PIT.
5. 20-10-5 FERTILIZER TABLET PER SPECS. IN ADDITION TO COMPOST AND FERTILIZERS.
6. 3" MULCH OR OTHER GROUND PLANE MATERIAL PER PLAN, KEEP MATERIAL AWAY FROM PLANT STEM AND LOWER BRANCHES.
7. UNDISTURBED SOIL.

B SHRUB PLANTING

SCALE: NO_SCALE

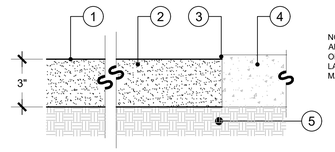

NOTES:
APPLY PRE-EMERGENT ON SUB-GRADE PRIOR TO LAYING PROPOSED MATERIALS.

LEGEND

1. FINISH GRADE
2. DECOMPOSED GRANITE PER LEGEND
3. SET 1/2" MAX BELOW HARDSCAPE/ STEEL EDGE/ CONCRETE BAND
4. CONCRETE BAND/ PAVING OR STEEL EDGING (WHERE OCCURS).
5. COMPACTED SUB-GRADE (90% MIN).

C DECOMPOSED GRANITE

SCALE: NO_SCALE

IDENTIFICATION STAMP
DIV. OF THE STATE ARCHITECT
APP: 03-122664 INC:
REVIEWED FOR
SS ☑ FLS ☑ ACS ☑
DATE: 05/12/2023

pjhm architects
LA Phone: 213.278.0172 • Web: pjhm.com
LICENSED ARCHITECT RICHARD W. RINGER NO. C15585 REN: 02/25 STATE OF CALIFORNIA
BPA LANDSCAPE ARCHITECTS
BRANDON PETRUNIO & ASSOCIATES, INC.
LANDSCAPE ARCHITECTS
Design Studio: 301 N. San Dimas Ave., San Dimas, CA. 91773
Corporate Office: 24461 Ridge Route Drive #100, Laguna Hills, CA 92653
T: (424) 235-8940, M: (951) 312-9943, E: brandon@bpolas.com
LICENSED LANDSCAPE ARCHITECT BRANDON PETRUNIO No. 6491 STATE OF CALIFORNIA
Signature
01/31/2025
Renewal Date
03/31/2023
Date
SD Phone: 760.730.5527 • LA Office: 837 Traction Avenue, #410, Los Angeles, CA 90013 • SD Phone: 760.730.5527 • OC Phone: 949.496.6191 • SD Office: 804 Pier View Way #103, Oceanside, CA 92054 • OC Office: 24461 Ridge Route Drive #100, Laguna Hills, CA 92653

HIGHLAND HIGH SCHOOL
50M POOL & AQUATICS CENTER

KERN HIGH SCHOOL DISTRICT

LANDSCAPE PLANTING DETAILS

DETAILS

LPD.1

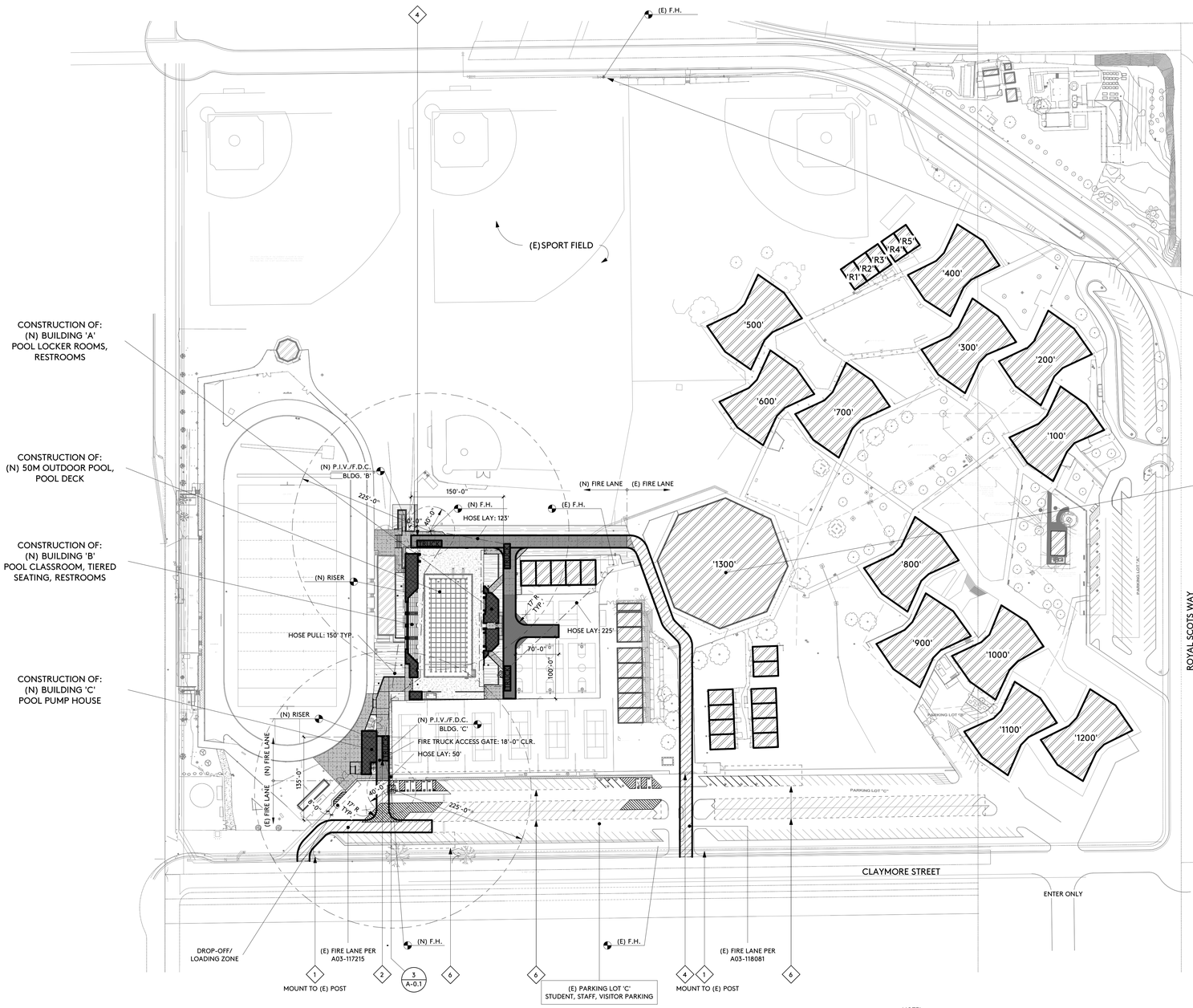

FLOW HYDRANT
TEST DATE,TIME: AUGUST 16, 2022, 11:30 AM
HYDRANT SIZE: 4"
COEFFICIENT OF DISCHARGE: 0.9
PITOT PRESSURE: 25
FLOW: 2148 GPM
STATIC PRESSURE: 74 PSI
RESIDUAL PRESSURE: 34 PSI
HYDRANT ELEVATION: 1-6 FT.
FLOW: 2526.3 GPM AT 20 PSI

MINIMUM REQUIRED FIRE FLOW
AND FLOW DURATION FOR BUILDINGS

MOST DEMANDING BUILDING: '1300'
FIRE AREA: 31,920 SQ. FT.
CONSTRUCTION TYPE: II-A
AUTOMATIC FIRE SPRINKLERS: NO
REQUIRED FIRE FLOW: 2,500 GPM AT 20 PSI
REQUIRED FLOW DURATION: 2 HOURS
MINIMUM NO. OF HYDRANTS: 3
AVG. SPACING BETWEEN HYDRANTS: 450'
AVG. SPACING FROM STREET TO HYDRANT: 225'

NOTE!
FOR LOCATION OF INTERIOR LOT LINES - ESTABLISHING FIRE SEPARATION DISTANCE, SEE 1/A-0.2

SITE PLAN - LOCAL FIRE ACCESS

1" = 80'-0"

(N) BUILDING/STRUCTURE
(E) BUILDING
(E) FIRE APPARATUS ACCESS ROADWAY
20'-0" MIN. WIDE FIRE ACCESS LANE, U.N.O.
17'-0" MIN. INSIDE TURN RADII
38'-0" MIN. OUTSIDE TURN RADII
(N) FIRE APPARATUS ACCESS ROADWAY
20'-0" MIN. WIDE FIRE ACCESS LANE, U.N.O.
17'-0" MIN. INSIDE TURN RADII
38'-0" MIN. OUTSIDE TURN RADII
CONCRETE ROADWAY 2/A-1.13
AC ROADWAY 10/A-1.13
F.H. FIRE HYDRANT
HOSE LAY LENGTH, 225' MAX./ HOSE PULL LENGTH, 150' MAX.
P.I.V./F.D.C. POST INDICATOR VALVE/FIRE DEPARTMENT CONNECTION
F.D.C. FIRE DEPARTMENT CONNECTION
D.C.D.A. DOUBLE CHECK-DETECTOR ASSEMBLY
B.F.P. BACK FLOW PREVENTOR
RISER AUTOMATIC FIRE SPRINKLER RISER
FIRE LANE IDENTIFICATION - PAINTED RED CURBS PER DETAIL 2/A-0.1
WHERE APPARATUS ACCESS ROADWAY INDICATED*
(N) CONCRETE PAVING 2/A-1.13
WHERE APPARATUS ACCESS ROADWAY INDICATED*
(N) ASPHALT PAVING 10/A-1.13
(N) LANDSCAPE
150' FIRE TRUCK PROXIMITY FROM EDGE OF FIRE LANE
SITE PROPERTY LINE
FIRE ENGINE

*ROADWAY SHALL BE CONSTRUCTED AND MAINTAINED TO SUPPORT MINIMUM IMPOSED LOADS OF: 68,000 LBS.

SYMBOLS

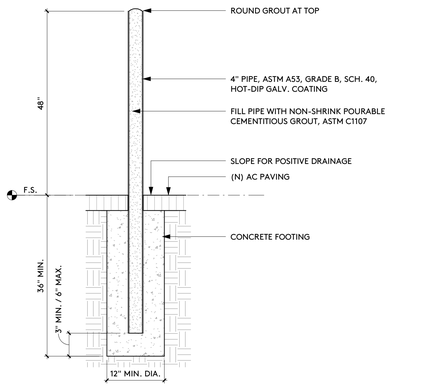

GUARD POST 4

3/4" = 1'-0"

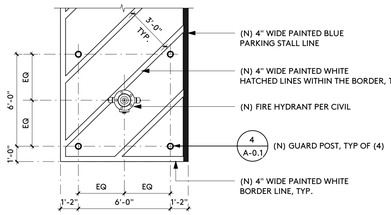

ENLARGED 3

1/4" = 1'-0"

1. (N) FIRE LANE ENTRANCE SIGN 7/A-1.15
2. (N) MANUALLY OPERATED VEHICLE ACCESS GATE (MIN. 16'-0" CLEAR OPENING) WITH KNOX PADLOCK AND 'NO PARKING' SIGN MOUNTED TO FACE OF GATE 6/A-1.7
3. NOT USED
4. (E) MANUALLY OPERATED VEHICLE ACCESS GATE
5. (E) LOCATION OF PREMISES IDENTIFICATION, CHARACTERS MIN. 6" TALL
6. (E) PV ARRAY OVERHEAD PER A#03-117215, 14'-0" MIN. VERTICAL CLEARANCE

SITE PLAN KEYNOTES

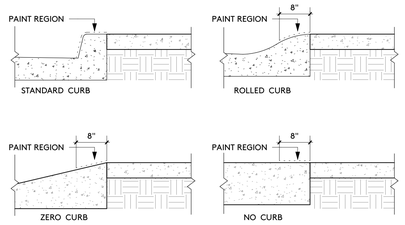

1. CURBS ALONG ACCESS LANES SHALL BE PAINTED OSHA SAFETY RED
2. "FIRE LANE NO PARKING" SHALL BE PAINTED ON TOP OF CURB IN WHITE LETTERING 3" HIGH AND SHALL BE SPACED 30'-0" ON CENTER OR PORTION THEREOF

CURB PROFILES 2

3/4" = 1'-0"

DSA 810

FIRE & LIFE SAFETY SITE CONDITIONS SUBMITTAL

Division of the State Architect (DSA) documents referenced within this publication are available on the DSA Forms or DSA Publications webpages.

To facilitate the Division of the State Architect's (DSA) fire and life safety plan review of project site conditions, DSA requires the design professional to provide the following information at time of project submittal for projects consisting of construction of a new campus, construction of new building(s), additions to existing buildings, and for site alternate design means for fire department emergency vehicle access, and fire suppression water supply.

Information associated with compliance items 1 through 3 below is to be provided for all project types indicated above. Information associated with items 4 through 7 is to be completed when an alternate means is utilized. Acknowledgement by the school district and signature from the Local Fire Authority (LFA) is only required when an alternate design means is being requested.

The Project Information and Fire & Life Safety Information sections are to be completed for all projects and imaged onto the fire access site plan. When an alternate design/means is proposed, all sections on pages 1 and 2 are to be completed and imaged on the fire access site plan.

For additional information refer to the instructions at the end of this form and DSA Policy *PI. 09-01: Fire Flow for Buildings*.

PROJECT INFORMATION	
School District/Owner:	KERN HIGH SCHOOL DISTRICT
Project Name/School:	HIGHLAND HIGH SCHOOL - 50M POOL & AQUATICS CENTER
Project Address:	2900 ROYAL SCOTS WAY, BAKERSFIELD, CA 93306

FIRE & LIFE SAFETY INFORMATION				
1.	Has a fire hydrant flow test been performed within the past 12 months? *(If yes, provide a copy of the test data.)*	Yes ■		No ☐
2.	Was the fire hydrant water flow test performed as part of this LFA review?	Yes ■		No ☐
3.	Is the project located within a designated fire hazard severity zone (FHSZ) as established by Cal-Fire? *(If yes, indicate FHSZ classification below.)*	Yes ☐		No ■
	Refer to the following website for FHSZ locations: http://egis.fire.ca.gov/FHSZ	Moderate ☐	High ☐	Very High ☐
	Wildland Interface Area (WIFA) *(If any designations are checked, project design must meet the requirements of CBC Chapter 7A.)*			WIFA ☐

DGS DSA 810 (revised 12/29/20) Page 1 of 4
DIVISION OF THE STATE ARCHITECT DEPARTMENT OF GENERAL SERVICES STATE OF CALIFORNIA

DSA - 810

IDENTIFICATION STAMP
DIV. OF THE STATE ARCHITECT
APP: 03-122664 INC:
REVIEWED FOR
SS ☑ FLS ☑ ACS ☑
DATE: 05/12/2023

pjhm architects

LICENSED ARCHITECT
BARBARA W. PARRISH
NO. C 25585
REN. 02/25
STATE OF CALIFORNIA

OC Office: 24461 Ridge Route Drive #100, Laguna Hills, CA 92653 • SD Phone: 760.730.5527 • OC Phone: 949.496.6191 • SD Office: 804 Pier View Way #103, Oceanside, CA 92054 • LA Office: 837 Traction Avenue, #410, Los Angeles, CA 90013 • LA Phone: 213.278.0172 • Web: pjhm.com

HIGHLAND HIGH SCHOOL
50M POOL & AQUATICS CENTER

KERN HIGH SCHOOL DISTRICT

SITE PLAN - LOCAL FIRE ACCESS

A-0.1

4/13/2023 9:02:48 AM

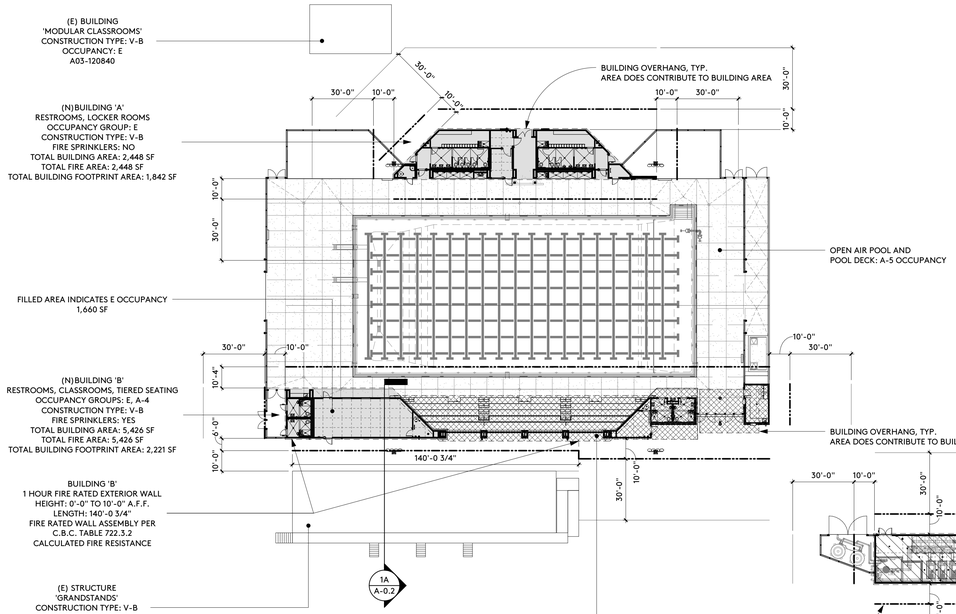

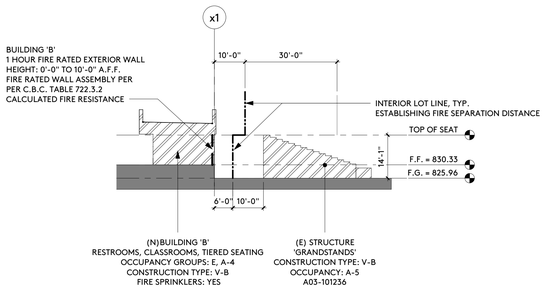

FIRE SEPARATION DIAGRAM — 1A

1" = 20'-0"

BUILDING 'A'

1.	OCCUPANCY GROUP(S) BUILDING:	E
2.	CONSTRUCTION TYPE TYPE:	V-B
3.	BUILDING HEIGHT (CBC TABLE 504.3) ALLOWABLE: ACTUAL:	40' E; NS 18'-0"
4.	STORIES ABOVE GRADE PLANE (CBC TABLE 504.4) ALLOWABLE: ACTUAL:	1 E; NS 1
5.	BUILDING AREA (PER STORY) (CBC TABLE 506.2) ALLOWABLE: ACTUAL:	9,500 sf E; NS 2,448 sf
7.	SPRINKLER SYSTEM:	NO

BUILDING 'B'

1.	OCCUPANCY GROUP(S) BUILDING:	E, A-4
2.	CONSTRUCTION TYPE TYPE:	V-B
3.	BUILDING HEIGHT (CBC TABLE 504.3) ALLOWABLE: ALLOWABLE: ACTUAL:	40' E; S (with area increase) 40' A-4; S (with area increase) 26'-4"
4.	STORIES ABOVE GRADE PLANE (CBC TABLE 504.4) ALLOWABLE: ALLOWABLE: ACTUAL:	1 E; S (with area increase) 1 A-4; S (with area increase) 1
5.	BUILDING AREA (PER STORY) (CBC TABLE 506.2) ALLOWABLE: ALLOWABLE: ACTUAL:	38,000 sf E; S1 24,000 sf A-4; S1 5,426 sf
6.	NONSEPARATED MIXED-OCCUPANCY CALCULATION (CBC SECTION 508.3) MOST RESTRICTIVE OCCUPANCY: ALLOWABLE BUILDING AREA: TOTAL BUILDING AREA:	A-4 (BUILDING AREA, HEIGHT, STORIES) 24,000 sf 5,426 sf
7.	SPRINKLER SYSTEM:	YES, NFPA 13

BUILDING 'C'

1.	OCCUPANCY GROUP(S) BUILDING:	S-2
2.	CONSTRUCTION TYPE TYPE:	V-B
3.	BUILDING HEIGHT (CBC TABLE 504.3) ALLOWABLE: ACTUAL:	60' S-2; S 18'-0"
4.	STORIES ABOVE GRADE PLANE (CBC TABLE 504.4) ALLOWABLE: ACTUAL:	3 S-2; S 1
5.	BUILDING AREA (PER STORY) (CBC TABLE 506.2) ALLOWABLE: ACTUAL:	54,000 sf S-2; S1 1,605 sf
6.	SPRINKLER SYSTEM:	YES , NFPA 13

BUILDING SEPARATION ANALYSIS

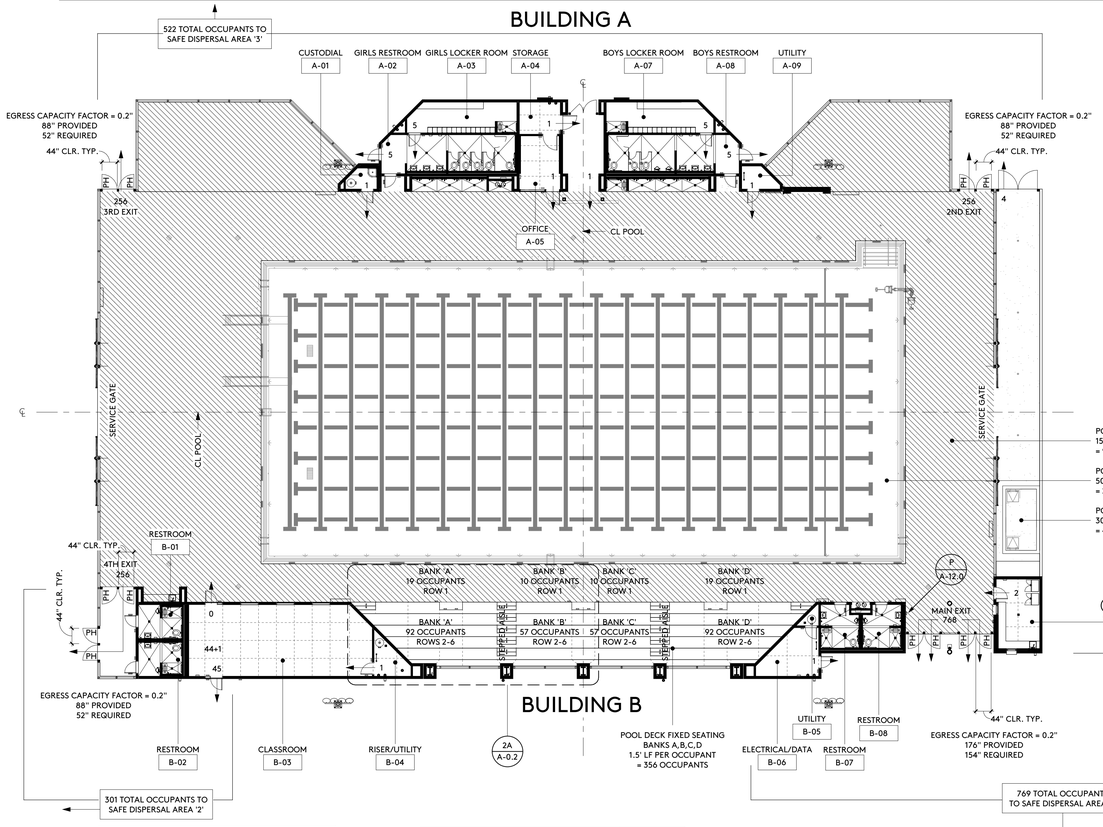

NOTE:
THIS POOL IS INTENDED FOR USE FOR COMPETITIVE AQUATIC EVENTS. AN OCCUPANT LOAD OF 50 SF PER OCCUPANT HAS BEEN ASSIGNED TO THE POOL SURFACE AREA. ANY CHANGE IN USE WILL REQUIRE REVIEW AND APPROVAL BY THE DIVISION OF THE STATE ARCHITECT.

AGGREGATE OCCUPANT LOAD EXITING:	OCCUPANTS
POOL SURFACE AREA /50 SF 12,369 SF/ 50 SF	248
POOL DECK ASSEMBLY AREA /15 SF 13,828 SF/ 15 SF	922
POOL ACCESSORY STORAGE AREA	004
POOL DECK FIXED SEATING	356
BUILDING 'A'	004
BUILDING 'B'	002
TOTAL	1,536

EXITING ANALYSIS

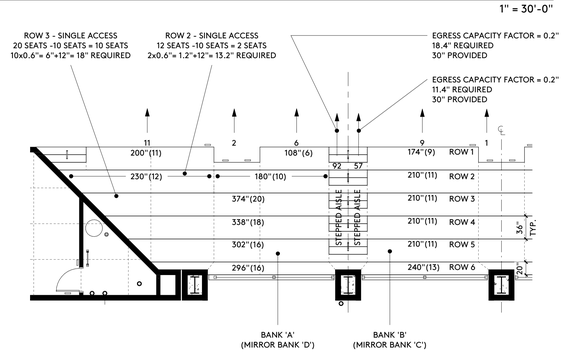

ENLARGED PLAN — 2A

1/8" = 1'-0"

AGGREGATE OCCUPANT LOAD EXITING:	OCCUPANTS
BUILDING 'C' POOL ACCESSORY STORAGE AREA	5 2
TOTAL	7

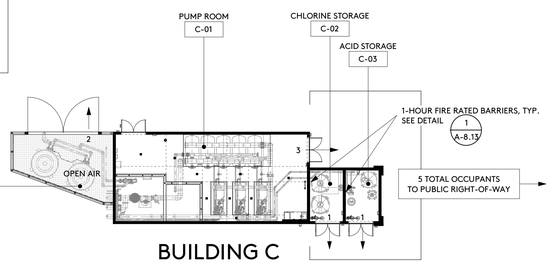

BUILDING DATA

BUILDING 'A'

ROOM	NAME	OCCUPANCY	AREA (NET)	OCCUPANT LOAD FACTOR	OCCUPANTS
A-01	CUSTODIAL	E	40 SF	300	1
A-02	GIRLS RESTROOM	E	328 SF		
A-03	GIRLS LOCKER ROOM	E	219 SF	50	5
A-04	STORAGE	E	89 SF	300	1
A-05	OFFICE	E	146 SF	150	1
A-07	BOYS LOCKER ROOM	E	213 SF	50	5
A-08	BOYS RESTROOM	E	322 SF		
A-09	UTILITY	E	48 SF	300	1

TOTAL: 15

BUILDING 'B'

ROOM	NAME	OCCUPANCY	AREA (NET)	OCCUPANT LOAD FACTOR	OCCUPANTS
B-01	RESTROOM	E	96 SF		
B-02	RESTROOM	E	96 SF		
B-03	CLASSROOM	E	875 SF	20	44
B-04	RISER/UTILITY	E	71 SF	300	1
B-05	UTILITY	E	17 SF		
B-06	ELECTRICAL/DATA	A-4	158 SF	300	1
B-07	RESTROOM	A-4	105 SF		
B-08	RESTROOM	A-4	105 SF		
B-09	TICKET BOOTH/CONCESSIONS	A-4	200 SF	150	2

TOTAL: 48

BUILDING 'C'

ROOM	NAME	OCCUPANCY	AREA (NET)	OCCUPANT LOAD FACTOR	OCCUPANTS
C-01	PUMP ROOM	S-2	870 SF	300	3
C-02	CHLORINE STORAGE	S-2	116 SF	300	1
C-03	ACID STORAGE	S-2	116 SF	300	1

TOTAL: 5

OCCUPANCY LOAD

pjhm architects
OC Office: 24461 Ridge Route Drive #100, Laguna Hills, CA 92653 • OC Phone: 949.496.6191 • SD Office: 804 Pier View Way #103, Oceanside, CA 92054 • SD Phone: 760.730.5527 • LA Office: 837 Traction Avenue, #410, Los Angeles, CA 90013 • LA Phone: 213.278.0172 • Web: pjhm.com

IDENTIFICATION STAMP
DIV. OF THE STATE ARCHITECT
APP: 03-122664 INC:
REVIEWED FOR
SS ☑ FLS ☑ ACS ☑
DATE: 05/12/2023

LICENSED ARCHITECT
RICHARD W. PRIEST
NO. C15585
REN. 02/25
STATE OF CALIFORNIA

HIGHLAND HIGH SCHOOL
50M POOL & AQUATICS CENTER
KERN HIGH SCHOOL DISTRICT

1 ADDENDUM NO. 1

BUILDING ANALYSIS

A-0.2

4/13/2023 9:04:35 AM

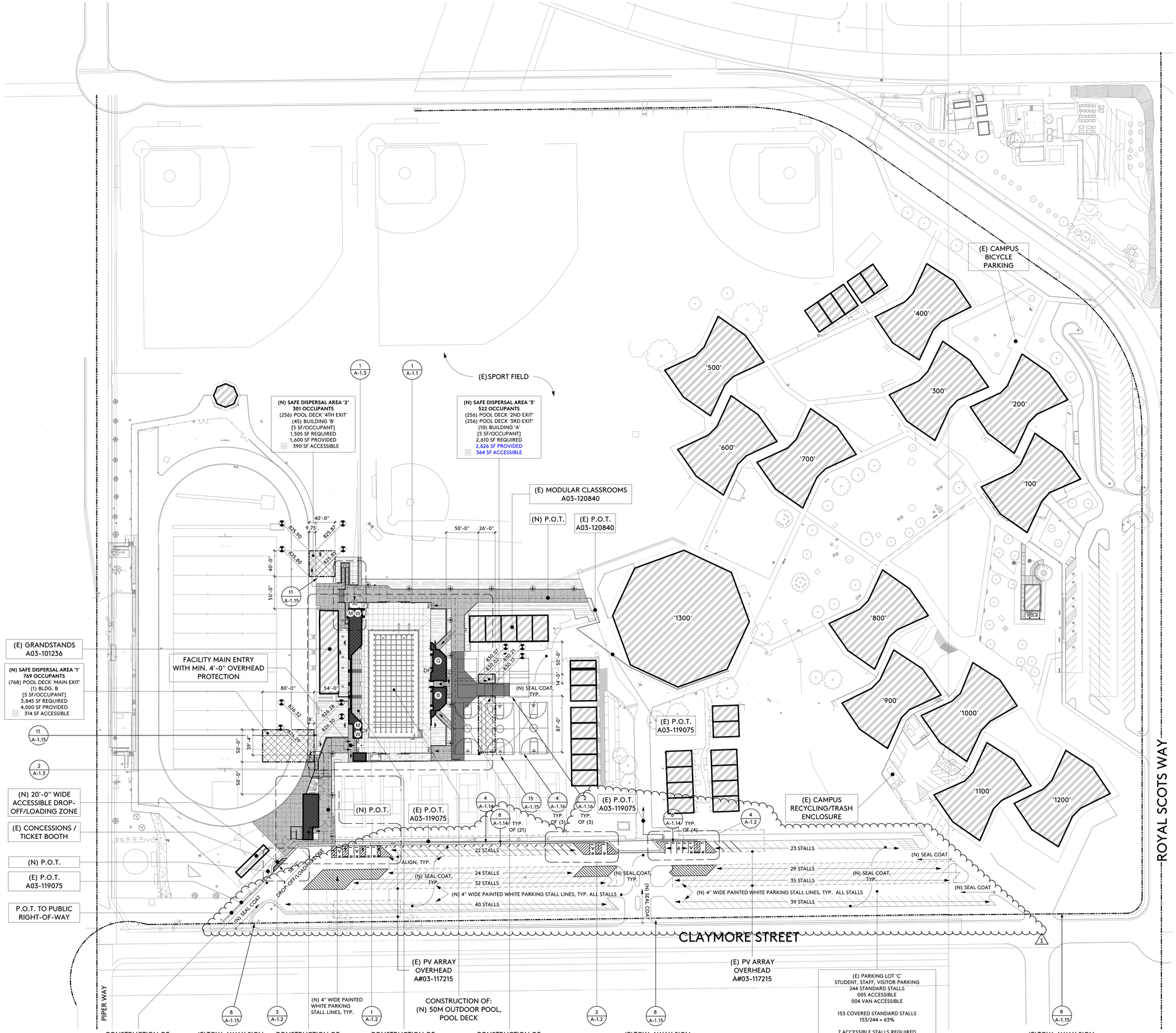

SITE PLAN - CAMPUS

1" = 60'-0"

1. CONTRACTORS BIDDING OR PERFORMING WORK SHALL VERIFY THE CONDITIONS OF THE SITE, INCLUDING ACCESS BEFORE SUBMITTING BID OR COMMENCING WORK AND SHALL NOTIFY THE ARCHITECT OF ANY DISCREPANCIES FOR PROMPT DIRECTION.
2. THE EXISTENCE AND LOCATION OF EXISTING UNDERGROUND UTILITIES OR STRUCTURES INDICATED OR NOT ON THE DRAWINGS ARE OBTAINED BY SEARCH OF AVAILABLE RECORDS. IT IS THE CONTRACTOR'S RESPONSIBILITY TO VERIFY EXACT LOCATIONS. THE CONTRACTOR IS REQUIRED TO TAKE PRECAUTIONARY MEASURES TO PROTECT THE UTILITIES AND OTHER STRUCTURES. ANY DAMAGE SHALL BE PROMPTLY RESTORED TO THE OWNERS SATISFACTION.
3. REFERENCE CIVIL, PLUMBING, MECHANICAL, AND ELECTRICAL DRAWINGS FOR ALL UNDERGROUND UTILITY WORK TO BE COMPLETED IN THIS CONTRACT.
4. GENERAL CONTRACTOR TO COORDINATE ALL PHASING AND UTILITY INTERRUPTIONS OF THIS PROJECT WITH THE OWNER AND ARCHITECT AS TO DO THE LEAST POSSIBLE INTERRUPTIONS. (AS-REQ'D)
5. PROVIDE CONSTRUCTION BARRICADES AS REQUIRED TO PROTECT THE PUBLIC'S HEALTH AND SAFETY INCLUDING WORK UNDER CONSTRUCTION TO THE REQUIREMENTS OF THE OWNER. COVER OPEN TRENCHES WITH ADEQUATE SOLID MATERIAL.
6. EXCAVATION AND TRENCHING SHALL COMPLY WITH THE REQUIREMENTS OF THE TESTING LAB AND JURISDICTIONAL REQUIREMENTS AT THE TIME WORK COMMENCES AND UP TO COMPLETION OF THE WORK.
7. COMPLY WITH 2019 CALIFORNIA FIRE CODE, CHAPTER 33 FOR FIRE SAFETY DURING CONSTRUCTION AND DEMOLITION.
8. FOR GRATINGS OR STRAINERS LOCATED IN THE SURFACE OF ANY PEDESTRIAN WAY IN THE PATH OF TRAVEL, THE MAXIMUM GRATE OR STRAINER OPENINGS SHALL NOT EXCEED 1/2" IN THE DIRECTION OF TRAFFIC FLOW.
9. TEMPORARY CONSTRUCTION FENCING TO BE SUPPLIED BY CONTRACTOR
10. ALL NEW WALK SURFACES ON P.O.T.'S SHALL HAVE FLUSH TRANSITIONS TO ALL ADJACENT NEW OR EXISTING WALK SURFACES IN P.O.T.'S

GENERAL NOTES

- (N) BUILDING/STRUCTURE FOR USE, OCCUPANCY, CONSTRUCTION TYPE, A.F.S.S. REQUIREMENTS, SEE SHEET A-0.2
- (E) BUILDING
- (N) CONCRETE PAVING — 2 A-1.13
- CONTROL JOINT — 2 A-1.13
- CONSTRUCTION JOINT — 3 A-1.13
- (N) ASPHALT PAVING — 10 A-1.13
- (N) LANDSCAPE, SEE LANDSCAPE DRAWINGS
- M W (N) RESTROOM (MEN, WOMEN), UNLESS NOTED OTHERWISE
- B G (N) RESTROOM (BOYS, GIRLS), UNLESS NOTED OTHERWISE
- U (N) RESTROOM
- DF (N) DUAL HEIGHT DRINKING FOUNTAIN
- V VAN ACCESSIBLE PARKING STALL
- 1 A-1.1 SHEET REFERENCE NUMBER / DETAIL REFERENCE NUMBER
- LIGHT FIXTURE, SEE ELECTRICAL
- SITE PROPERTY LINE
- PATH OF TRAVEL (P.O.T) (DSA A# AS NOTED ON PLAN)

DESIGN PROFESSIONAL IN GENERAL RESPONSIBLE CHARGE STATEMENT:
THE POT IDENTIFIED IN THESE CONSTRUCTION DOCUMENTS MEETS THE REQUIREMENTS OF THE CURRENT APPLICABLE CALIFORNIA BUILDING CODE (CBC) ACCESSIBILITY PROVISIONS FOR PATH OF TRAVEL REQUIREMENTS FOR ALTERATIONS, ADDITIONS AND STRUCTURAL REPAIRS. AS PART OF THE DESIGN OF THIS PROJECT, THE POT WAS EXAMINED AND ANY ELEMENTS, COMPONENTS OR PORTIONS OF THE POT THAT WERE DETERMINED TO BE NONCOMPLIANT WITH THE CBC HAVE BEEN IDENTIFIED AND THE CORRECTIVE WORK NECESSARY TO BRING THEM INTO COMPLIANCE HAS BEEN INCLUDED WITHIN THE SCOPE OF THIS PROJECT'S WORK THROUGH DETAILS, DRAWINGS, AND SPECIFICATIONS INCORPORATED INTO THESE CONSTRUCTION DOCUMENTS. ANY NON-COMPLIANT ELEMENTS, COMPONENTS OR PORTIONS OF THE POT THAT WILL NOT BE CORRECTED BY THIS PROJECT BASED ON VALUATION THRESHOLD LIMITATIONS OR A FINDING OF UNREASONABLE HARDSHIP ARE INDICATED IN THESE CONSTRUCTION DOCUMENTS.
DURING CONSTRUCTION, IF POT ITEMS WITHIN THE SCOPE OF THE PROJECT REPRESENTED AS CBC COMPLIANT ARE FOUND TO BE NONCONFORMING BEYOND REASONABLE CONSTRUCTION TOLERANCES, THE ITEMS SHALL BE BROUGHT INTO COMPLIANCE WITH THE CBC AS A PART OF THIS PROJECT BY MEANS OF A CONSTRUCTION CHANGE DOCUMENT.

- (E) P.O.T PER A#03-120840
- (E) P.O.T PER A#03-119075

SYMBOLS

IDENTIFICATION STAMP
DIV. OF THE STATE ARCHITECT
APP: 03-122664 INC:
REVIEWED FOR
SS ☑ FLS ☑ ACS ☑
DATE: 05/12/2023

pjhm architects
LICENSED ARCHITECT
BARBARA W. FRIEDMAN
NO. C 15585
REN. 02/25
STATE OF CALIFORNIA
SD Phone: 760.730.5527 • LA Office: 837 Traction Avenue, #410, Los Angeles, CA 90013 • LA Phone: 213.278.0172 • Web: pjhm.com
OC Office: 24461 Ridge Route Drive #100, Laguna Hills, CA 92653 • OC Phone: 949.496.6191 • SD Office: 804 Pier View Way #103, Oceanside, CA 92054

HIGHLAND HIGH SCHOOL
50M POOL & AQUATICS CENTER

KERN HIGH SCHOOL DISTRICT

1 ADDENDUM NO. 1

SITE PLAN

A-1.0

4/13/2023 9:02:52 AM

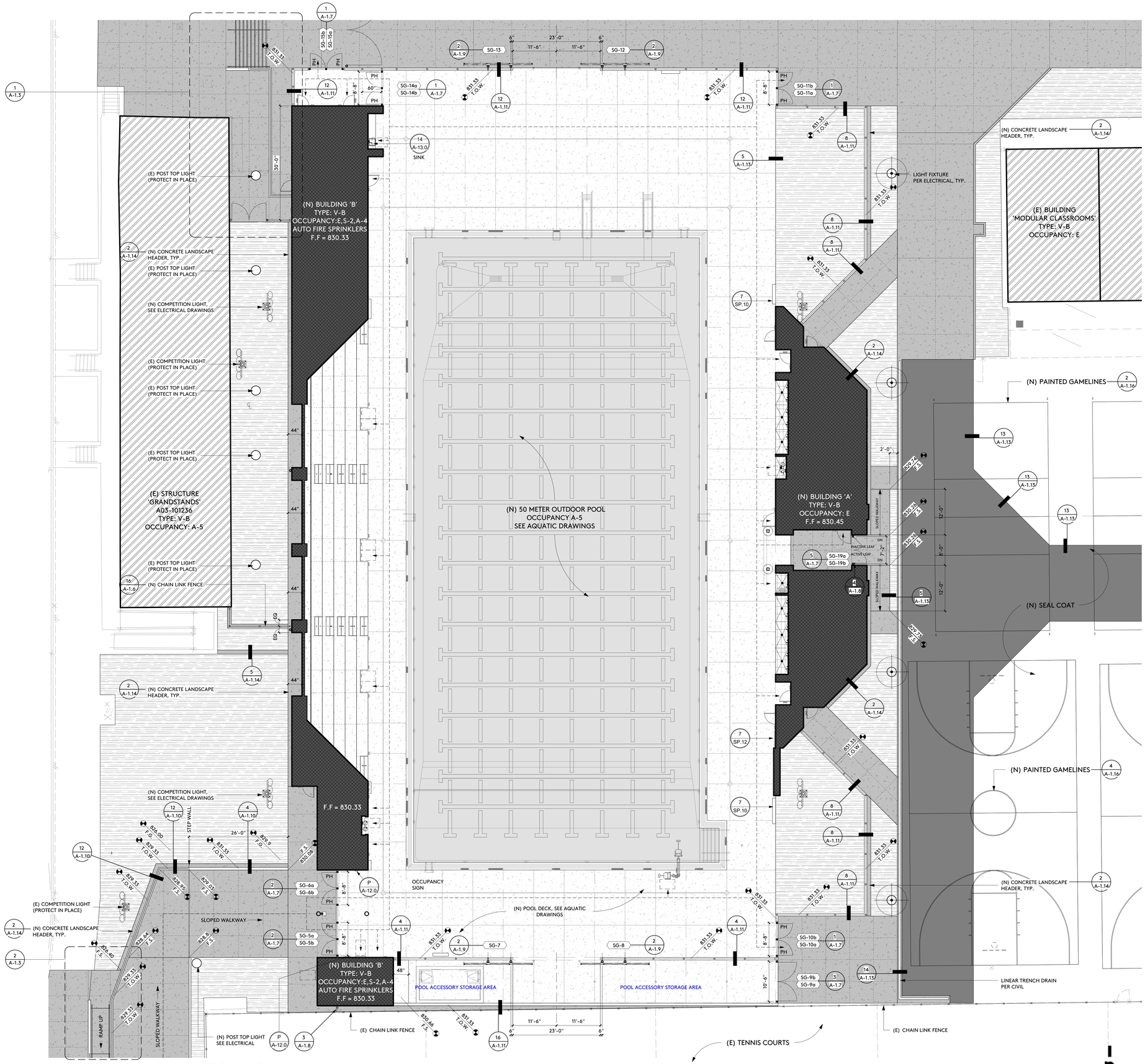

ENLARGED SITE PLAN - POOL FACILITY

1" = 10'-0"

1. CONTRACTORS BIDDING OR PERFORMING WORK SHALL VERIFY THE CONDITIONS OF THE SITE, INCLUDING ACCESS BEFORE SUBMITTING BID OR COMMENCING WORK AND SHALL NOTIFY THE ARCHITECT OF ANY DISCREPANCIES FOR PROMPT DIRECTION.
2. THE EXISTENCE AND LOCATION OF EXISTING UNDERGROUND UTILITIES OR STRUCTURES INDICATED OR NOT ON THE DRAWINGS ARE OBTAINED BY SEARCH OF AVAILABLE RECORDS. IT IS THE CONTRACTOR'S RESPONSIBILITY TO VERIFY EXACT LOCATIONS. THE CONTRACTOR IS REQUIRED TO TAKE PRECAUTIONARY MEASURES TO PROTECT THE UTILITIES AND OTHER STRUCTURES. ANY DAMAGE SHALL BE PROMPTLY RESTORED TO THE OWNERS SATISFACTION.
3. REFERENCE CIVIL, PLUMBING, MECHANICAL, AND ELECTRICAL DRAWINGS FOR ALL UNDERGROUND UTILITY WORK TO BE COMPLETED IN THIS CONTRACT.
4. GENERAL CONTRACTOR TO COORDINATE ALL PHASING AND UTILITY INTERRUPTIONS OF THIS PROJECT WITH THE OWNER AND ARCHITECT AS TO DO THE LEAST POSSIBLE INTERRUPTIONS. (AS-REQ'D)
5. PROVIDE CONSTRUCTION BARRICADES AS REQUIRED TO PROTECT THE PUBLIC'S HEALTH AND SAFETY INCLUDING WORK UNDER CONSTRUCTION TO THE REQUIREMENTS OF THE OWNER. COVER OPEN TRENCHES WITH ADEQUATE SOLID MATERIAL.
6. EXCAVATION AND TRENCHING SHALL COMPLY WITH THE REQUIREMENTS OF THE TESTING LAB AND JURISDICTIONAL REQUIREMENTS AT THE TIME WORK COMMENCES AND UP TO COMPLETION OF THE WORK.
7. COMPLY WITH 2019 CALIFORNIA FIRE CODE, CHAPTER 33 FOR FIRE SAFETY DURING CONSTRUCTION AND DEMOLITION.
8. FOR GRATINGS OR STRAINERS LOCATED IN THE SURFACE OF ANY PEDESTRIAN WAY IN THE PATH OF TRAVEL, THE MAXIMUM GRATE OR STRAINER OPENINGS SHALL NOT EXCEED 1/2" IN THE DIRECTION OF TRAFFIC FLOW.
9. TEMPORARY CONSTRUCTION FENCING TO BE SUPPLIED BY CONTRACTOR
10. ALL NEW WALK SURFACES ON P.O.T.'S SHALL HAVE FLUSH TRANSITIONS TO ALL ADJACENT NEW OR EXISTING WALK SURFACES IN P.O.T.'S

GENERAL NOTES

12" = 1'-0"

(N) BUILDING IN SCOPE

(E) BUILDING - NOT IN SCOPE

(N) CONCRETE PAVING — 2 A-1.13

CONTROL JOINT — 2 A-1.13

CONSTRUCTION JOINT — 3 A-1.13

(N) ASPHALT PAVING — 10 A-1.13

(N) LANDSCAPE, SEE LANDSCAPE

1 A-1.0 DETAIL REFERENCE NUMBER / SHEET REFERENCE NUMBER

G# 1 A-1.0 (N) SITE GATE

LIGHT FIXTURE, SEE ELECTRICAL

PATH OF TRAVEL (P.O.T)
(DSA A# AS NOTED ON PLAN)

DESIGN PROFESSIONAL IN GENERAL RESPONSIBLE CHARGE STATEMENT:
THE POT IDENTIFIED IN THESE CONSTRUCTION DOCUMENTS MEETS THE REQUIREMENTS OF THE CURRENT APPLICABLE CALIFORNIA BUILDING CODE (CBC) ACCESSIBILITY PROVISIONS FOR PATH OF TRAVEL REQUIREMENTS FOR ALTERATIONS, ADDITIONS AND STRUCTURAL REPAIRS. AS PART OF THE DESIGN OF THIS PROJECT, THE POT WAS EXAMINED AND ANY ELEMENTS, COMPONENTS OR PORTIONS OF THE POT THAT WERE DETERMINED TO BE NONCOMPLIANT WITH THE CBC HAVE BEEN IDENTIFIED AND THE CORRECTIVE WORK NECESSARY TO BRING THEM INTO COMPLIANCE HAS BEEN INCLUDED WITHIN THE SCOPE OF THIS PROJECT'S WORK THROUGH DETAILS, DRAWINGS, AND SPECIFICATIONS INCORPORATED INTO THESE CONSTRUCTION DOCUMENTS. ANY NON-COMPLIANT ELEMENTS, COMPONENTS OR PORTIONS OF THE POT THAT WILL NOT BE CORRECTED BY THIS PROJECT BASED ON VALUATION THRESHOLD LIMITATIONS OR A FINDING OF UNREASONABLE HARDSHIP ARE INDICATED IN THESE CONSTRUCTION DOCUMENTS.
DURING CONSTRUCTION, IF POT ITEMS WITHIN THE SCOPE OF THE PROJECT REPRESENTED AS CBC COMPLIANT ARE FOUND TO BE NONCONFORMING BEYOND REASONABLE CONSTRUCTION TOLERANCES, THE ITEMS SHALL BE BROUGHT INTO COMPLIANCE WITH THE CBC AS A PART OF THIS PROJECT BY MEANS OF A CONSTRUCTION CHANGE DOCUMENT.

(E) P.O.T PER APPROVED A#03-120840

(E) P.O.T PER APPROVED A#03-119075

SYMBOLS

1" = 20'-0"

IDENTIFICATION STAMP
DIV. OF THE STATE ARCHITECT
APP: 03-122664 INC:
REVIEWED FOR
SS ☑ FLS ☑ ACS ☑
DATE: 05/12/2023

pjhm architects

LICENSED ARCHITECT
RICHARD W. PRIMM
NO. C15585
REN. 02/25
STATE OF CALIFORNIA

OC Office: 24461 Ridge Route Drive #100, Laguna Hills, CA 92653 • OC Phone: 949.496.6191 • SD Office: 804 Pier View Way #103, Oceanside, CA 92054 • SD Phone: 760.730.5527 • LA Office: 837 Traction Avenue, #410, Los Angeles, CA 90013 • LA Phone: 213.278.0172 • Web: pjhm.com

HIGHLAND HIGH SCHOOL
50M POOL & AQUATICS CENTER

KERN HIGH SCHOOL DISTRICT

SITE PLAN - ENLARGED

A-1.1

4/13/2023 11:36:07 AM

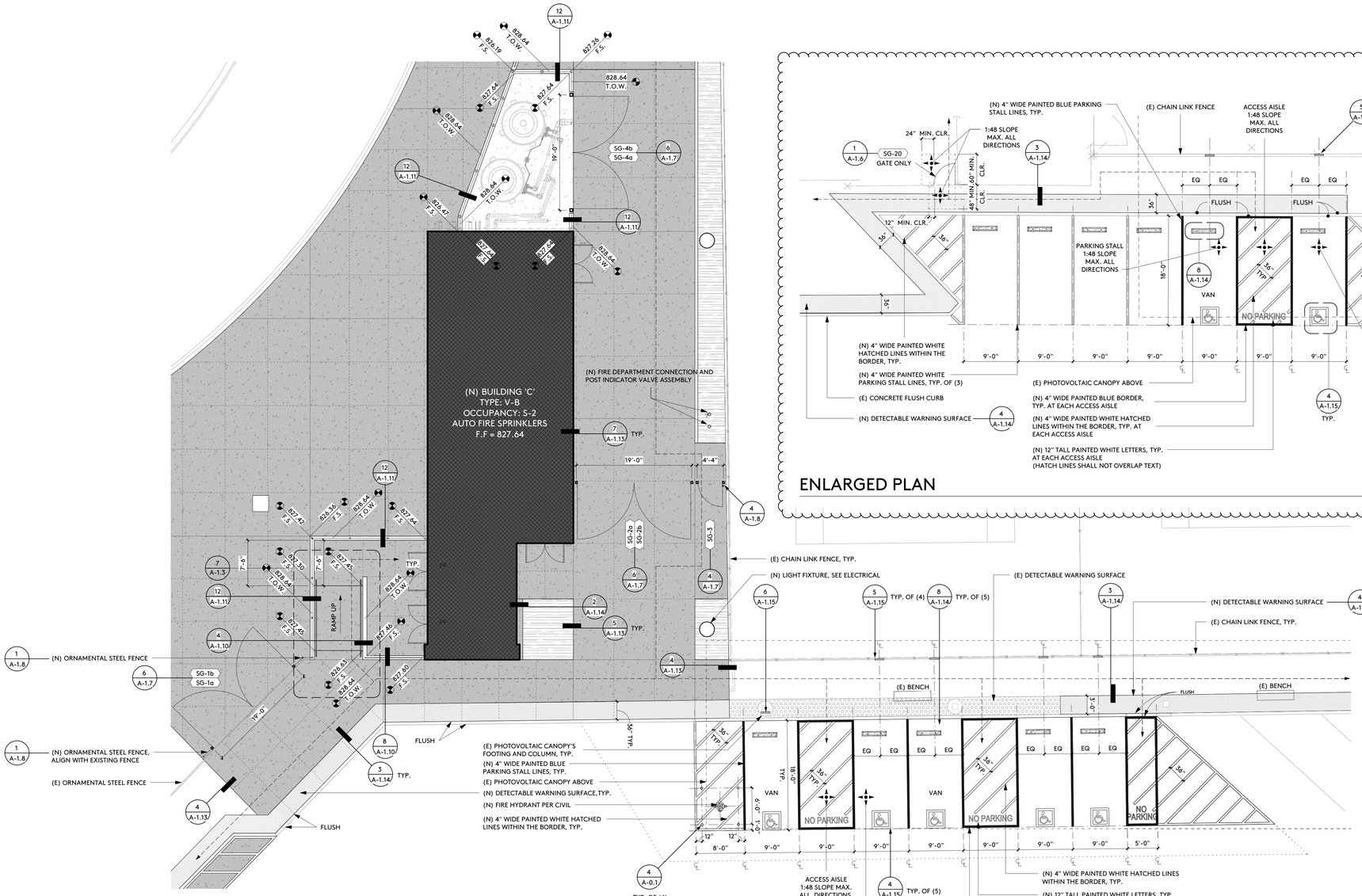

ENLARGED PLAN

1/8" = 1'-0"

ENLARGED PLAN

1/8" = 1'-0"

ENLARGED PLAN

1/8" = 1'-0"

ENLARGED PLAN

1/8" = 1'-0"

ENLARGED PLAN

1/8" = 1'-0"

1. CONTRACTORS BIDDING OR PERFORMING WORK SHALL VERIFY THE CONDITIONS OF THE SITE, INCLUDING ACCESS BEFORE SUBMITTING BID OR COMMENCING WORK AND SHALL NOTIFY THE ARCHITECT OF ANY DISCREPANCIES FOR PROMPT DIRECTION.
2. THE EXISTENCE AND LOCATION OF EXISTING UNDERGROUND UTILITIES OR STRUCTURES INDICATED OR NOT ON THE DRAWINGS ARE OBTAINED BY SEARCH OF AVAILABLE RECORDS. IT IS THE CONTRACTOR'S RESPONSIBILITY TO VERIFY EXACT LOCATIONS. THE CONTRACTOR IS REQUIRED TO TAKE PRECAUTIONARY MEASURES TO PROTECT THE UTILITIES AND OTHER STRUCTURES. ANY DAMAGE SHALL BE PROMPTLY RESTORED TO THE OWNERS SATISFACTION.
3. REFERENCE CIVIL, PLUMBING, MECHANICAL AND ELECTRICAL DRAWINGS FOR ALL UNDERGROUND UTILITY WORK TO BE COMPLETED IN THIS CONTRACT.
4. GENERAL CONTRACTOR TO COORDINATE ALL PHASING AND UTILITY INTERRUPTIONS OF THIS PROJECT WITH THE OWNER AND ARCHITECT AS TO DO THE LEAST POSSIBLE INTERRUPTIONS. (AS-REQ'D)
5. PROVIDE CONSTRUCTION BARRICADES AS REQUIRED TO PROTECT THE PUBLIC'S HEALTH AND SAFETY INCLUDING WORK UNDER CONSTRUCTION TO THE REQUIREMENTS OF THE OWNER. COVER OPEN TRENCHES WITH ADEQUATE SOLID MATERIAL.
6. EXCAVATION AND TRENCHING SHALL COMPLY WITH THE REQUIREMENTS OF THE TESTING LAB AND JURISDICTIONAL REQUIREMENTS AT THE TIME WORK COMMENCES AND UP TO COMPLETION OF THE WORK.
7. COMPLY WITH 2019 CALIFORNIA FIRE CODE, CHAPTER 33 FOR FIRE SAFETY DURING CONSTRUCTION AND DEMOLITION.
8. FOR GRATINGS OR STRAINERS LOCATED IN THE SURFACE OF ANY PEDESTRIAN WAY IN THE PATH OF TRAVEL, THE MAXIMUM GRATE OR STRAINER OPENINGS SHALL NOT EXCEED 1/2" IN THE DIRECTION OF TRAFFIC FLOW.
9. TEMPORARY CONSTRUCTION FENCING TO BE SUPPLIED BY CONTRACTOR.
10. ALL NEW WALK SURFACES ON P.O.T.'S SHALL HAVE FLUSH TRANSITIONS TO ALL ADJACENT NEW OR EXISTING WALK SURFACES IN P.O.T.'S

GENERAL NOTES

- (N) BUILDING / (E) BUILDING - IN SCOPE
- (E) BUILDING - NOT IN SCOPE
- (N) CONCRETE PAVING — 2 A-1.13
- CONTROL JOINT — 2 A-1.13
- CONSTRUCTION JOINT — 3 A-1.13
- (N) ASPHALT PAVING — 10 A-1.13
- (N) LANDSCAPE, SEE LANDSCAPE DRAWINGS
- SITE WALL - CAST-IN-PLACE CONCRETE
- SITE WALL - UNIT MASONRY
- 1 A-1.0 — DETAIL REFERENCE NUMBER / SHEET REFERENCE NUMBER
- G# — SITE GATE, SEE 'SITE DETAILS - FENCES & GATES' SHEETS
- ELEVATION DATUM
- PATH OF TRAVEL (P.O.T) (DSA A# AS NOTED ON PLAN)

DESIGN PROFESSIONAL IN GENERAL RESPONSIBLE CHARGE STATEMENT:
THE POT IDENTIFIED IN THESE CONSTRUCTION DOCUMENTS MEETS THE REQUIREMENTS OF THE CURRENT APPLICABLE CALIFORNIA BUILDING CODE (CBC) ACCESSIBILITY PROVISIONS FOR PATH OF TRAVEL REQUIREMENTS FOR ALTERATIONS, ADDITIONS AND STRUCTURAL REPAIRS. AS PART OF THE DESIGN OF THIS PROJECT, THE POT WAS EXAMINED AND ANY ELEMENTS, COMPONENTS OR PORTIONS OF THE POT THAT WERE DETERMINED TO BE NONCOMPLIANT WITH THE CBC HAVE BEEN IDENTIFIED AND THE CORRECTIVE WORK NECESSARY TO BRING THEM INTO COMPLIANCE HAS BEEN INCLUDED WITHIN THE SCOPE OF THIS PROJECT'S WORK THROUGH DETAILS, DRAWINGS, AND SPECIFICATIONS INCORPORATED INTO THESE CONSTRUCTION DOCUMENTS. ANY NON-COMPLIANT ELEMENTS, COMPONENTS OR PORTIONS OF THE POT THAT WILL NOT BE CORRECTED BY THIS PROJECT BASED ON VALUATION THRESHOLD LIMITATIONS OR A FINDING OF UNREASONABLE HARDSHIP ARE INDICATED IN THESE CONSTRUCTION DOCUMENTS.
DURING CONSTRUCTION, IF POT ITEMS WITHIN THE SCOPE OF THE PROJECT REPRESENTED AS CBC COMPLIANT ARE FOUND TO BE NONCONFORMING BEYOND REASONABLE CONSTRUCTION TOLERANCES, THE ITEMS SHALL BE BROUGHT INTO COMPLIANCE WITH THE CBC AS A PART OF THIS PROJECT BY MEANS OF A CONSTRUCTION CHANGE DOCUMENT.

- (E) P.O.T PER APPROVED A#03-120840
- (E) P.O.T PER APPROVED A#03-119075

SYMBOLS

IDENTIFICATION STAMP
DIV. OF THE STATE ARCHITECT
APP: 03-122664 INC:
REVIEWED FOR
SS ☑ FLS ☑ ACS ☑
DATE: 05/12/2023

pjhm architects
LICENSED ARCHITECT
BARBARA W. PARRISH
NO. C15585
REN. 02/25
STATE OF CALIFORNIA
LA Office: 837 Traction Avenue, #410, Los Angeles, CA 90013 • LA Phone: 213.278.0172 • Web: pjhm.com
SD Phone: 760.730.5527 • OC Office: 24461 Ridge Route Drive #100, Laguna Hills, CA 92653 • OC Phone: 949.496.6191 • SD Office: 804 Pier View Way #103, Oceanside, CA 92054

HIGHLAND HIGH SCHOOL
50M POOL & AQUATICS CENTER
KERN HIGH SCHOOL DISTRICT

1 ADDENDUM NO. 1

SITE PLAN - ENLARGED

A-1.2

4/13/2023 9:03:01 AM

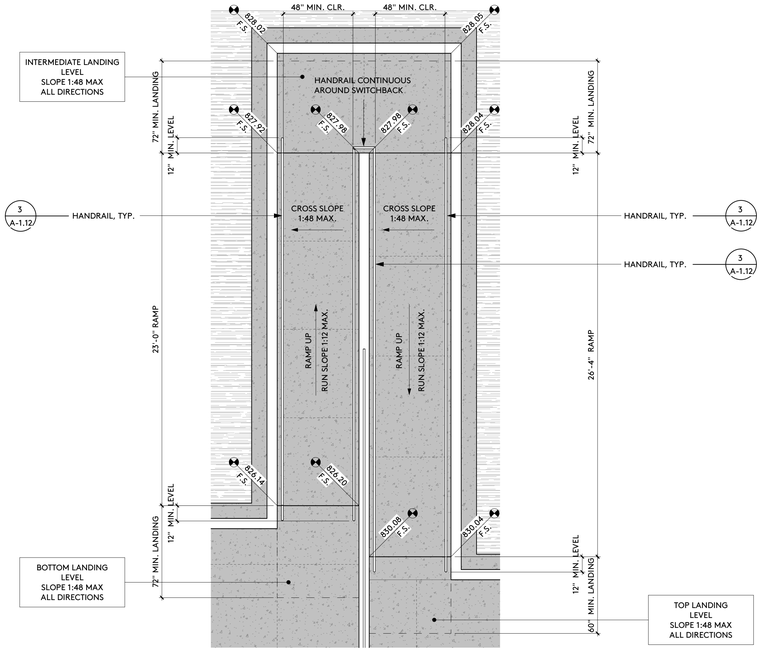

ENLARGED PLAN

1/4" = 1'-0"

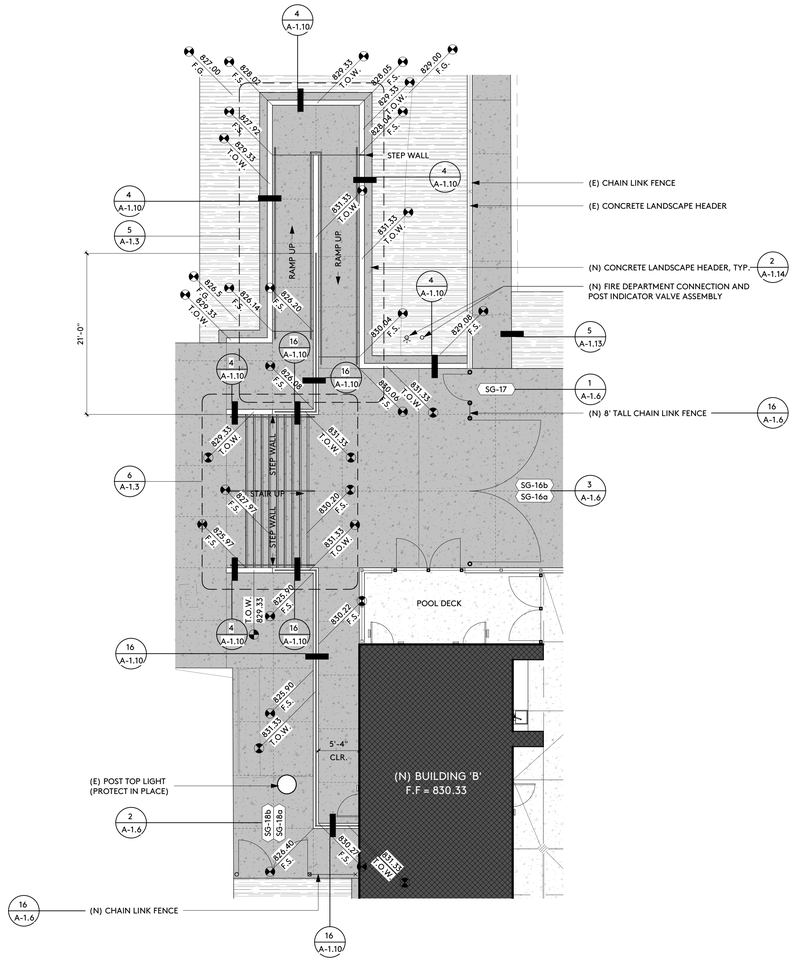

ENLARGED PLAN

1/8" = 1'-0"

1. CONTRACTORS BIDDING OR PERFORMING WORK SHALL VERIFY THE CONDITIONS OF THE SITE, INCLUDING ACCESS BEFORE SUBMITTING BID OR COMMENCING WORK AND SHALL NOTIFY THE ARCHITECT OF ANY DISCREPANCIES FOR PROMPT DIRECTION.
2. THE EXISTENCE AND LOCATION OF EXISTING UNDERGROUND UTILITIES OR STRUCTURES INDICATED OR NOT ON THE DRAWINGS ARE OBTAINED BY SEARCH OF AVAILABLE RECORDS. IT IS THE CONTRACTOR'S RESPONSIBILITY TO VERIFY EXACT LOCATIONS. THE CONTRACTOR IS REQUIRED TO TAKE PRECAUTIONARY MEASURES TO PROTECT THE UTILITIES AND OTHER STRUCTURES. ANY DAMAGE SHALL BE PROMPTLY RESTORED TO THE OWNERS SATISFACTION.
3. REFERENCE CIVIL, PLUMBING, MECHANICAL, AND ELECTRICAL DRAWINGS FOR ALL UNDERGROUND UTILITY WORK TO BE COMPLETED IN THIS CONTRACT.
4. GENERAL CONTRACTOR TO COORDINATE ALL PHASING AND UTILITY INTERRUPTIONS OF THIS PROJECT WITH THE OWNER AND ARCHITECT AS TO DO THE LEAST POSSIBLE INTERRUPTIONS. (AS-REQ'D)
5. PROVIDE CONSTRUCTION BARRICADES AS REQUIRED TO PROTECT THE PUBLIC'S HEALTH AND SAFETY INCLUDING WORK UNDER CONSTRUCTION TO THE REQUIREMENTS OF THE OWNER. COVER OPEN TRENCHES WITH ADEQUATE SOLID MATERIAL.
6. EXCAVATION AND TRENCHING SHALL COMPLY WITH THE REQUIREMENTS OF THE TESTING LAB AND JURISDICTIONAL REQUIREMENTS AT THE TIME WORK COMMENCES AND UP TO COMPLETION OF THE WORK.
7. COMPLY WITH 2019 CALIFORNIA FIRE CODE, CHAPTER 33 FOR FIRE SAFETY DURING CONSTRUCTION AND DEMOLITION.
8. FOR GRATINGS OR STRAINERS LOCATED IN THE SURFACE OF ANY PEDESTRIAN WAY IN THE PATH OF TRAVEL, THE MAXIMUM GRATE OR STRAINER OPENINGS SHALL NOT EXCEED 1/2" IN THE DIRECTION OF TRAFFIC FLOW.
9. TEMPORARY CONSTRUCTION FENCING TO BE SUPPLIED BY CONTRACTOR
10. ALL NEW WALK SURFACES ON P.O.T.'S SHALL HAVE FLUSH TRANSITIONS TO ALL ADJACENT NEW OR EXISTING WALK SURFACES IN P.O.T.'S

IDENTIFICATION STAMP
DIV. OF THE STATE ARCHITECT
APP: 03-122664 INC:
REVIEWED FOR
SS ☑ FLS ☑ ACS ☑
DATE: 05/12/2023

pjhm architects
LICENSED ARCHITECT
RICHARD W. PRIEBE
NO. C15585
REN. 02/25
STATE OF CALIFORNIA
LA Phone: 213.278.0172 • Web: pjhm.com
LA Office: 837 Traction Avenue, #410, Los Angeles, CA 90013 • SD Phone: 760.730.5527 • OC Phone: 949.496.6191 • SD Office: 804 Pier View Way #103, Oceanside, CA 92054 • OC Office: 24461 Ridge Route Drive #100, Laguna Hills, CA 92653

GENERAL NOTES

- (N) BUILDING / (E) BUILDING - IN SCOPE
- (E) BUILDING - NOT IN SCOPE
- (N) CONCRETE PAVING — 2 A-1.13
  - CONTROL JOINT — 2 A-1.13
  - CONSTRUCTION JOINT — 3 A-1.13
- (N) ASPHALT PAVING — 10 A-1.13
- (N) LANDSCAPE, SEE LANDSCAPE DRAWINGS
- SITE WALL - CAST-IN-PLACE CONCRETE
- SITE WALL - UNIT MASONRY
- 1 A-1.0 — DETAIL REFERENCE NUMBER / SHEET REFERENCE NUMBER
- G# — SITE GATE, SEE 'SITE DETAILS - FENCES & GATES' SHEETS
- ELEVATION DATUM
- **PATH OF TRAVEL (P.O.T)** (DSA A# AS NOTED ON PLAN)

DESIGN PROFESSIONAL IN GENERAL RESPONSIBLE CHARGE STATEMENT:
THE POT IDENTIFIED IN THESE CONSTRUCTION DOCUMENTS MEETS THE REQUIREMENTS OF THE CURRENT APPLICABLE CALIFORNIA BUILDING CODE (CBC) ACCESSIBILITY PROVISIONS FOR PATH OF TRAVEL REQUIREMENTS FOR ALTERATIONS, ADDITIONS AND STRUCTURAL REPAIRS. AS PART OF THE DESIGN OF THIS PROJECT, THE POT WAS EXAMINED AND ANY ELEMENTS, COMPONENTS OR PORTIONS OF THE POT THAT WERE DETERMINED TO BE NONCOMPLIANT WITH THE CBC HAVE BEEN IDENTIFIED AND THE CORRECTIVE WORK NECESSARY TO BRING THEM INTO COMPLIANCE HAS BEEN INCLUDED WITHIN THE SCOPE OF THIS PROJECT'S WORK THROUGH DETAILS, DRAWINGS, AND SPECIFICATIONS INCORPORATED INTO THESE CONSTRUCTION DOCUMENTS. ANY NON-COMPLIANT ELEMENTS, COMPONENTS OR PORTIONS OF THE POT THAT WILL NOT BE CORRECTED BY THIS PROJECT BASED ON VALUATION THRESHOLD LIMITATIONS OR A FINDING OF UNREASONABLE HARDSHIP ARE INDICATED IN THESE CONSTRUCTION DOCUMENTS.
DURING CONSTRUCTION, IF POT ITEMS WITHIN THE SCOPE OF THE PROJECT REPRESENTED AS CBC COMPLIANT ARE FOUND TO BE NONCONFORMING BEYOND REASONABLE CONSTRUCTION TOLERANCES, THE ITEMS SHALL BE BROUGHT INTO COMPLIANCE WITH THE CBC AS A PART OF THIS PROJECT BY MEANS OF A CONSTRUCTION CHANGE DOCUMENT.

- (E) P.O.T PER APPROVED A#03-120840
- (E) P.O.T PER APPROVED A#03-119075

ENLARGED PLAN

1/4" = 1'-0"

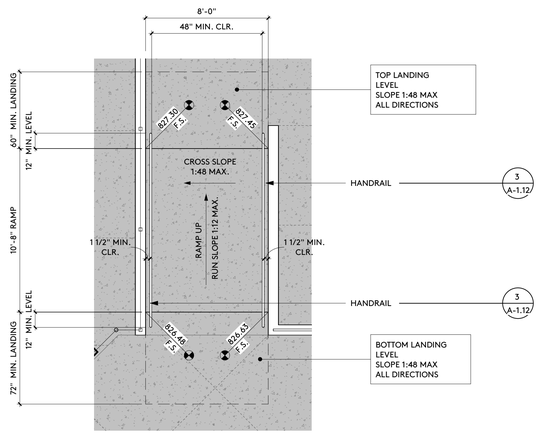

ENLARGED PLAN

1/4" = 1'-0"

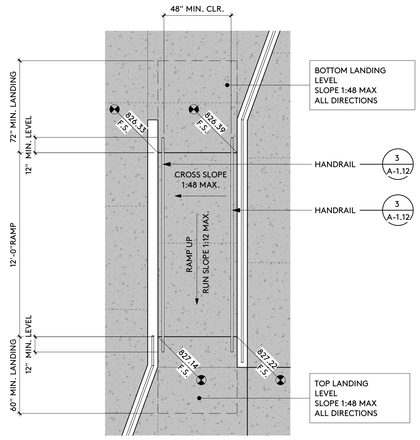

ENLARGED PLAN

1/4" = 1'-0"

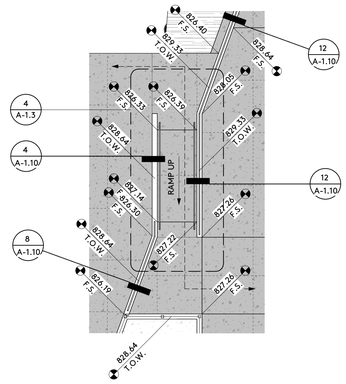

ENLARGED PLAN

1/8" = 1'-0"

SYMBOLS

HIGHLAND HIGH SCHOOL
50M POOL & AQUATICS CENTER

KERN HIGH SCHOOL DISTRICT

SITE PLAN - ENLARGED

A-1.3

4/13/2023 11:36:12 AM

1. GATES THAT ARE PART OF THE ACCESSIBLE ROUTE SHALL MEET ALL THE REQUIREMENTS OF AN ACCESSIBLE DOOR IN COMPLIANCE WITH CBC SECTION 11B-404.
2. THE LEVERS OF LEVER ACTUATED LATCHES OR LOCKS FOR ACCESSIBLE GATES SHALL BE CURVED WITH A RETURN TO WITHIN 1/2" OF THE GATE SURFACES TO PREVENT CATCHING ON THE CLOTHING OR PERSONS. CALIFORNIA REFERENCED STANDARDS CODE. T-24 PART 12, SECTION 12-10-202, ITEM (F).
3. SWING DOORS AND GATE SURFACES WITHIN 10" OF THE FINISH FLOOR OR GROUND SHALL HAVE A SMOOTH SURFACE ON THE PUSH SIDE EXTENDING THE FULL WIDTH OF THE DOOR OR GATE. PARTS CREATING HORIZONTAL OR VERTICAL JOINTS IN THESE SURFACES SHALL BE WITHIN 1/16" OF THE SAME PLANE AS THE OTHER AND BE FREE OF SHARP OR ABRASIVE EDGES. CAVITIES CREATED BY ADDED KICK PLATES SHALL BE CAPPED. CBC SECTION 11B-404.2.10.
4. EMERGENCY EXIT AND PANIC HARDWARE PER SFM STANDARD 12-10-3, SECTION 12-10-302:
   (a) THE CROSS-BAR SHALL EXTEND ACROSS NOT LESS THAN ONE-HALF THE WIDTH OF THE DOOR/GATE.
   (d) THE ENDS OF THE CROSS-BAR SHALL BE CURVED, GUARDED OR OTHERWISE DESIGNED TO PREVENT CATCHING ON THE CLOTHING OF PERSONS DURING EGRESS.

GENERAL NOTES - GATES, AND HARDWARE 13

1/8" = 1'-0"

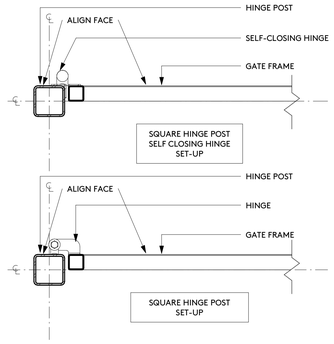

STEEL GATE - HINGE ANCHORAGE 14

1 1/2" = 1'-0"

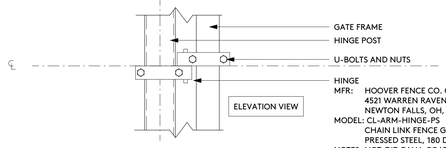

HINGE
MFR: HOOVER FENCE CO. OR EQUAL
4521 WARREN RAVENNA RD.
NEWTON FALLS, OH, 44444
MODEL: CL-ARM-HINGE-PS
CHAIN LINK FENCE GATE ARM HINGE
PRESSED STEEL, 180 DEG. SWING
NOTES: HOT-DIP GALV. COATING ALL COMPONENTS, PROVIDE U-BOLTS AND NUTS.

CL GATE - HINGE ANCHORAGE 15A

1 1/2" = 1'-0"

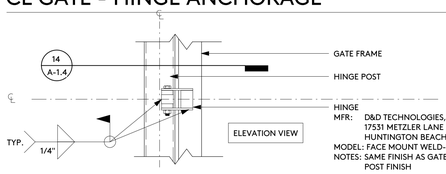

HINGE
MFR: D&D TECHNOLOGIES, OR EQUAL
17531 METZLER LANE
HUNTINGTON BEACH, CA, 92647
MODEL: FACE MOUNT WELD-ON, CI3050
NOTES: SAME FINISH AS GATE FRAME/HINGE POST FINISH

STEEL GATE - HINGE ANCHORAGE 15B

1 1/2" = 1'-0"

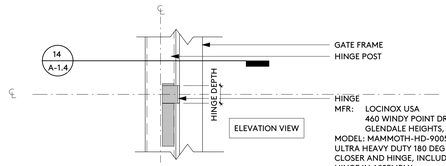

HINGE
MFR: LOCINOX USA
460 WINDY POINT DR.
GLENDALE HEIGHTS, IL, 60139
MODEL: MAMMOTH-HD-9005
ULTRA HEAVY DUTY 180 DEG HYDRAULIC GATE CLOSER AND HINGE, INCLUDED TOP & BOTTOM HINGE IN ASSEMBLY
RAL COLOR: RAL 9005

STEEL GATE - HINGE ANCHORAGE 16A

1 1/2" = 1'-0"

1. WELDING PROCEDURES, ELECTRODES AND WELDER QUALIFICATIONS SHALL CONFORM TO THE "CODE FOR WELDING IN BUILDING CONSTRUCTION", AMERICAN WELDING SOCIETY (AWS), D1.1 AND THE AISC "SPECIFICATIONS FOR THE DESIGN, FABRICATION AND ERECTION OF STRUCTURAL STEEL FOR BUILDINGS".
2. ALL WELDERS SHALL HAVE EVIDENCE OF PASSING THE AWS STANDARD QUALIFICATION TESTS, AND SHALL BE CERTIFIED FOR THE WORK THEY ARE PERFORMING.
3. PROJECT WELDING SHALL BE PERFORMED ONLY IN ACCORDANCE WITH WELDING PROCEDURE SPECIFICATIONS (WPS) SUBMITTED BY THE CONTRACTOR AND REVIEWED BY THE EOR AND PROJECT WELDING INSPECTOR. THE WPS SHALL BE IN ACCORDANCE WITH AWS D1.1-D1.4 CURRENT EDITION.
4. WELDING OF STRUCTURAL STEEL SHALL BE PERFORMED PER AWS D1.1 USING E70XX ELECTRODES UNLESS OTHERWISE NOTED.
5. WELDING OF REINFORCING BARS SHALL BE PERFORMED PER AWS D1.4 USING E90XX ELECTRODES.
6. WELDING OF METAL DECK AND LIGHT GAGE STEEL SHALL BE IN ACCORDANCE WITH AWS D1.3.
7. ALL EXPOSED WELDS ON ARCHITECTURALLY EXPOSED STRUCTURAL STEEL (AESS) SHALL COMPLY WITH AISC CODE OF STANDARD PRACTICE, SECTION 10.
8. FIELD WELDS HAVE BEEN INDICATED WHERE THEY ARE EXPECTED TO OCCUR. THE CONTRACTOR SHALL DETERMINE THE ACTUAL FIELD WELDING NECESSARY TO COMPLETE THE PROJECT AND INCLUDE ALL ASSOCIATED COSTS WITHIN THE BASE BID

GENERAL NOTES - WELDING 9

1/8" = 1'-0"

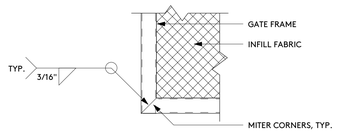

GATE FRAME CORNER 10A

1 1/2" = 1'-0"

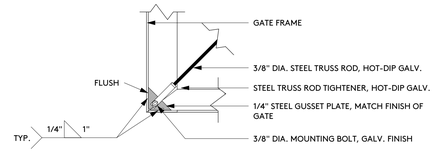

TRUSS ROD ATTACHMENT 10B

1 1/2" = 1'-0"

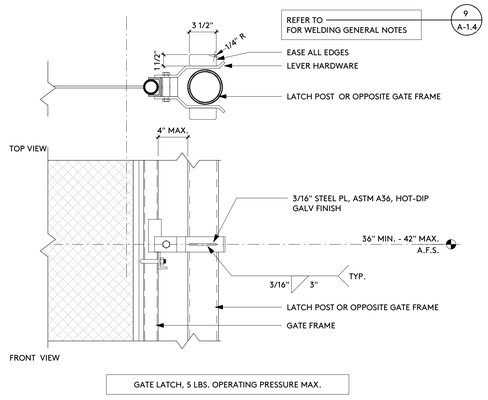

GATE HARDWARE 12

1 1/2" = 1'-0"

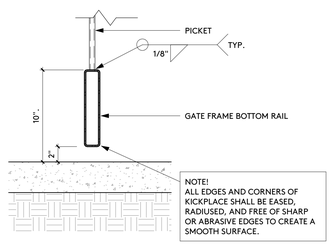

KICK PLATE ATTACHMENT 5

1 1/2" = 1'-0"

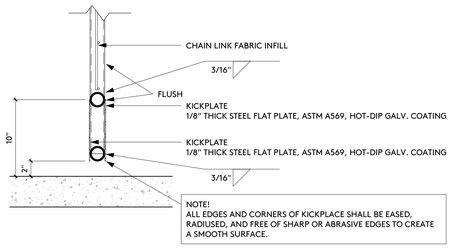

KICK PLATE ATTACHMENT 6

1 1/2" = 1'-0"

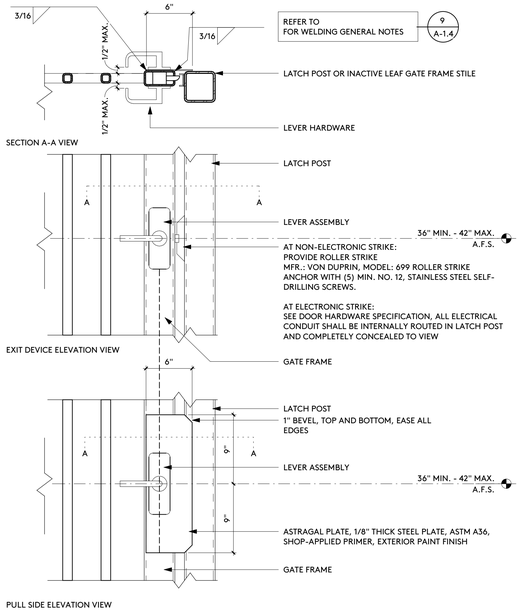

GATE HARDWARE 8

1 1/2" = 1'-0"

GATE SCHEDULE AS FOLLOWS:

GATE NUMBER	TYPE	HARDWARE GROUP	EXIT DEVICE REQUIRED	MATERIAL	FINISH
SG-1a	VEHICLE ACCESS	SG1	NO	STEEL	SHOP PRIME/FIELD PAINT
SG-1b	VEHICLE ACCESS	SG1	NO	STEEL	SHOP PRIME/FIELD PAINT
SG-2a	VEHICLE ACCESS	SG1	NO	STEEL	SHOP PRIME/FIELD PAINT
SG-2b	VEHICLE ACCESS	SG1	NO	STEEL	SHOP PRIME/FIELD PAINT
SG-3	PEDESTRIAN ACCESS	SG2	NO	STEEL	SHOP PRIME/FIELD PAINT
SG-4a	SERVICE	SG1	NO	STEEL	SHOP PRIME/FIELD PAINT
SG-4b	SERVICE	SG1	NO	STEEL	SHOP PRIME/FIELD PAINT
SG-5a	POOL ENCLOSURE EXIT	SG6	YES	STEEL	SHOP PRIME/FIELD PAINT
SG-5b	POOL ENCLOSURE EXIT	SG6	YES	STEEL	SHOP PRIME/FIELD PAINT
SG-6a	POOL ENCLOSURE EXIT	SG3	YES	STEEL	SHOP PRIME/FIELD PAINT
SG-6b	POOL ENCLOSURE EXIT	SG3	YES	STEEL	SHOP PRIME/FIELD PAINT
SG-7	HORZ. SLIDING SERVICE	SG4	NO	ALUMINUM	POWDER COAT
SG-8	HORZ. SLIDING SERVICE	SG4	NO	ALUMINUM	POWDER COAT
SG-9a	SERVICE	SG5	NO	STEEL	SHOP PRIME/FIELD PAINT
SG-9b	SERVICE	SG5	NO	STEEL	SHOP PRIME/FIELD PAINT
SG-10a	POOL ENCLOSURE EXIT	SG6	YES	STEEL	SHOP PRIME/FIELD PAINT
SG-10b	POOL ENCLOSURE EXIT	SG6	YES	STEEL	SHOP PRIME/FIELD PAINT
SG-11a	POOL ENCLOSURE EXIT	SG3	YES	STEEL	SHOP PRIME/FIELD PAINT
SG-11b	POOL ENCLOSURE EXIT	SG3	YES	STEEL	SHOP PRIME/FIELD PAINT
SG-12	HORZ. SLIDING SERVICE	SG4	NO	ALUMINUM	POWDER COAT
SG-13	HORZ. SLIDING SERVICE	SG4	NO	ALUMINUM	POWDER COAT
SG-14a	POOL ENCLOSURE EXIT	SG6	YES	STEEL	SHOP PRIME/FIELD PAINT
SG-14b	POOL ENCLOSURE EXIT	SG6	YES	STEEL	SHOP PRIME/FIELD PAINT
SG-15a	POOL ENCLOSURE EXIT	SG6	YES	STEEL	SHOP PRIME/FIELD PAINT
SG-15b	POOL ENCLOSURE EXIT	SG6	YES	STEEL	SHOP PRIME/FIELD PAINT
SG-16a	VEHICLE ACCESS	SG7	NO	CHAIN LINK FENCING	HOT-DIP GALV.
SG-16b	VEHICLE ACCESS	SG7	NO	CHAIN LINK FENCING	HOT-DIP GALV.
SG-17	PEDESTRIAN ACCESS	SG8	NO	CHAIN LINK FENCING	HOT-DIP GALV.
SG-18a	SERVICE	SG7	NO	CHAIN LINK FENCING	HOT-DIP GALV.
SG-18b	SERVICE	SG7	NO	CHAIN LINK FENCING	HOT-DIP GALV.
SG-19a	SERVICE	SG5	NO	STEEL	SHOP PRIME/FIELD PAINT
SG-19b	SERVICE	SG5	NO	STEEL	SHOP PRIME/FIELD PAINT
SG-20	PEDESTRIAN ACCESS	SG8	NO	CHAIN LINK FENCING	HOT-DIP GALV.

1

GATE SCHEDULE 2

1/8" = 1'-0"

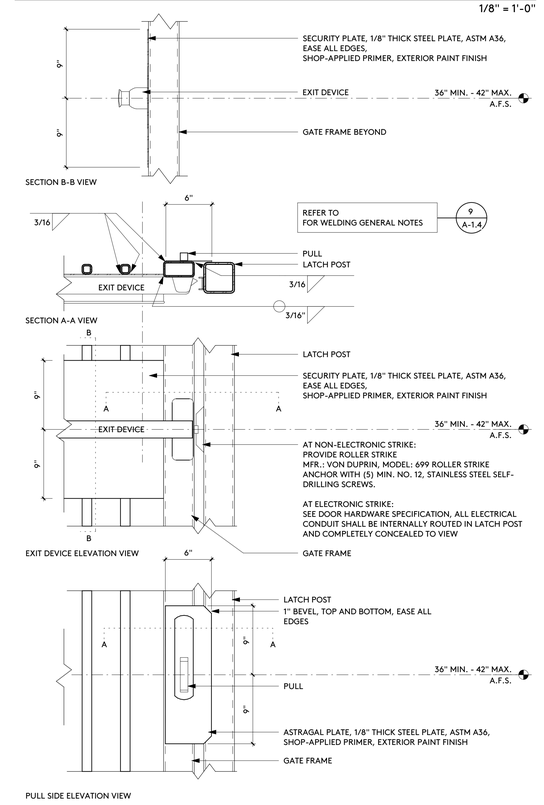

GATE HARDWARE 4

1 1/2" = 1'-0"

IDENTIFICATION STAMP
DIV. OF THE STATE ARCHITECT
APP: 03-122664 INC:
REVIEWED FOR
SS ☑ FLS ☑ ACS ☑
DATE: 05/12/2023

pjhm architects
LICENSED ARCHITECT
THOMAS W. PHILLIPS
NO. C15585
REN. 02/25
STATE OF CALIFORNIA
SD Phone: 760.730.5527 • LA Office: 837 Traction Avenue, #410, Los Angeles, CA 90013 • LA Phone: 213.278.0172 • Web: pjhm.com
OC Office: 24461 Ridge Route Drive #100, Laguna Hills, CA 92653 • OC Phone: 949.496.6191 • SD Office: 804 Pier View Way #103, Oceanside, CA 92054

HIGHLAND HIGH SCHOOL
50M POOL & AQUATICS CENTER

KERN HIGH SCHOOL DISTRICT

1 ADDENDUM NO. 1

SITE DETAILS - FENCES & GATES

A-1.4

4/13/2023 9:05:07 AM

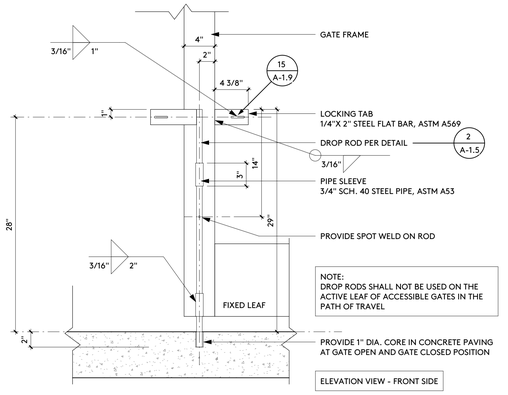

GATE HARDWARE - DROP ROD 5

1 1/2" = 1'-0"

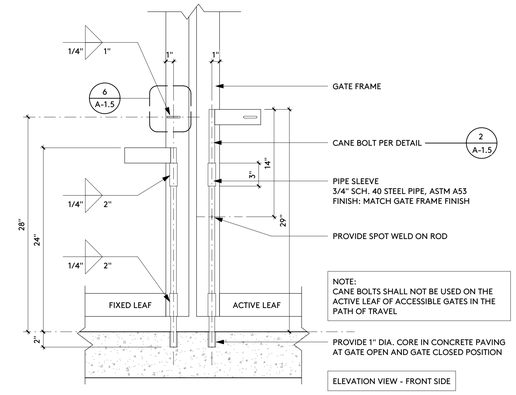

GATE HARDWARE - CANE BOLT 1

1 1/2" = 1'-0"

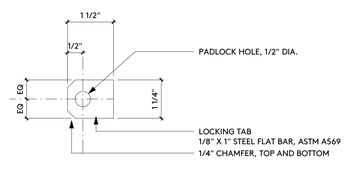

GATE HARDWARE - LOCKING TAB PROFILE 6

6" = 1'-0"

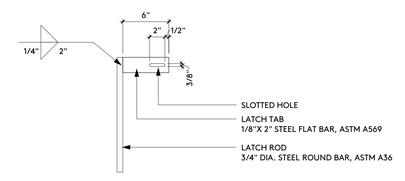

GATE HARDWARE - CANE BOLT 2

1 1/2" = 1'-0"

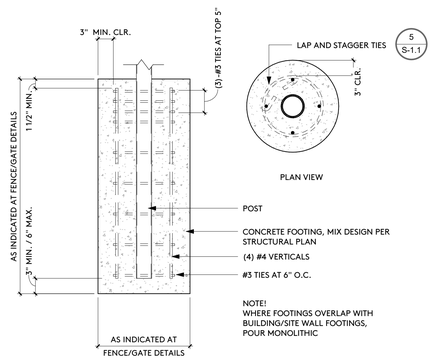

FOOTING REINFORCEMENT 4

1" = 1'-0"

IDENTIFICATION STAMP
DIV. OF THE STATE ARCHITECT
APP: 03-122664 INC:
REVIEWED FOR
SS ☑ FLS ☑ ACS ☑
DATE: 05/12/2023

pjhm architects

LICENSED ARCHITECT
THOMAS W. PHILLIPS
REN. 02/25
STATE OF CALIFORNIA

LA Office: 837 Traction Avenue, #410, Los Angeles, CA 90013 • LA Phone: 213.278.0172 • Web: pjhm.com
SD Phone: 760.730.5527 • OC Office: 24461 Ridge Route Drive #100, Laguna Hills, CA 92653 • OC Phone: 949.496.6191 • SD Office: 804 Pier View Way #103, Oceanside, CA 92054

HIGHLAND HIGH SCHOOL
50M POOL & AQUATICS CENTER

KERN HIGH SCHOOL DISTRICT

SITE DETAILS - FENCES & GATES

A-1.5

4/13/2023 9:05:08 AM

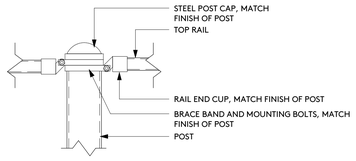

DETAIL 13A

1 1/2" = 1'-0"

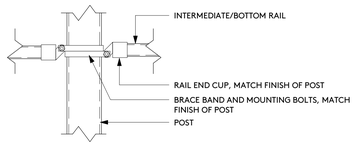

DETAIL 13B

1 1/2" = 1'-0"

NOTE! CHAIN LINK FENCES & GATES 9A

1/8" = 1'-0"

1. ALL GATE FRAMES/COMPONENTS SHALL BE: A.E.S.S. LEVEL 3
2. INFILL PANEL ℰ=50% PER ASCE 7, SECTION 26.3.
NO MEMBRANE OR MATERIAL CAN BE ATTACHED OR HUNG TO THE NETTING OR FENCING THAT WOULD EXCEED THE ℰ ABOVE
3. GATE FRAME ASSEMBLY SHALL BE FULLY WELDED, WELDS ALL AROUND WITH FIILET WELDS, SEE WELDING NOTES (9 / A-1.4)
4. GATE FRAME ASSEMBLY SHALL BE HOT-DIP GALVANIZED AFTER FABRICATION, COLD GALVANIZING WILL NOT BE PERMITTED.
5. PRODUCT DATA AND SHOP DRAWINGS ARE REQUIRED. APPROVED SUBMITTALS ARE REQUIRED PRIOR TO FABRICATION.
6. PIPES SIZES ARE NOMINAL, UNLESS NOTED OTHERWISE.

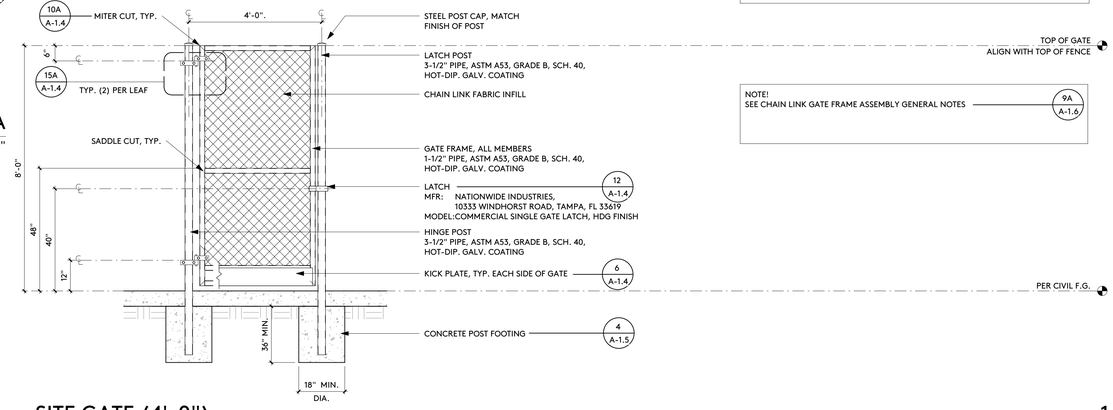

SITE GATE (4'-0") 1

1/2" = 1'-0"

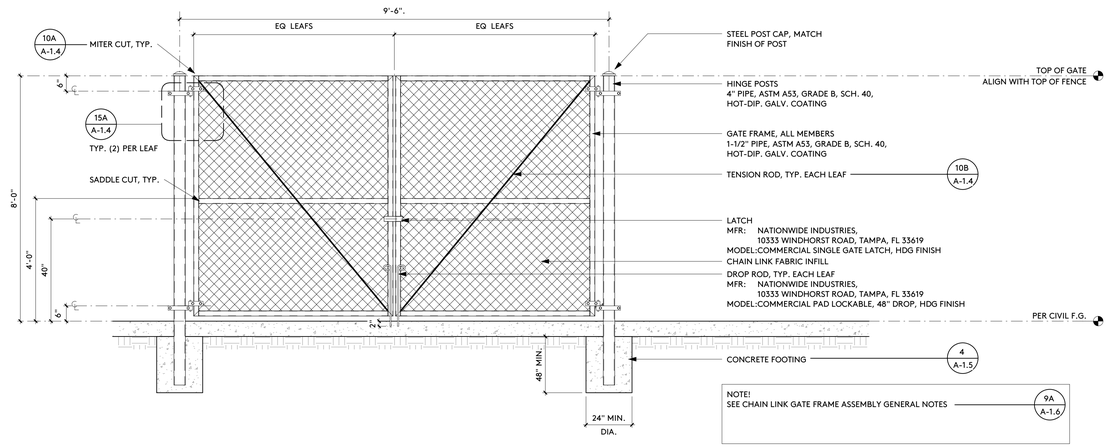

SITE GATE (9'-6") 2

1/2" = 1'-0"

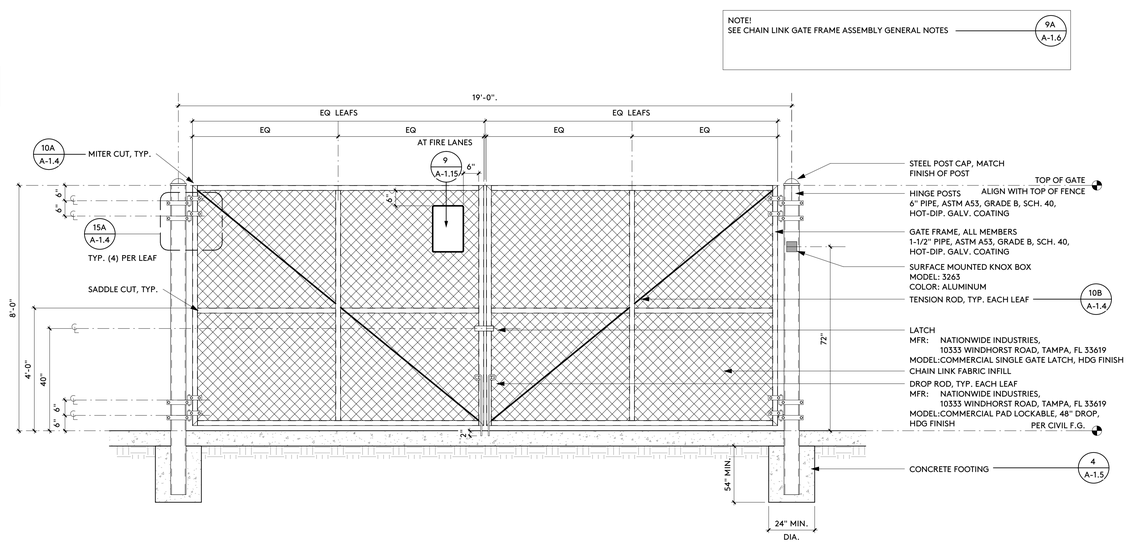

SITE GATE (19'-0") 3

1/2" = 1'-0"

INFILL PANEL ℰ=50% PER ASCE 7, SECTION 26.3.
NO MEMBRANE OR MATERIAL CAN BE ATTACHED OR HUNG TO THE NETTING OR FENCING THAT WOULD EXCEED THE ℰ ABOVE

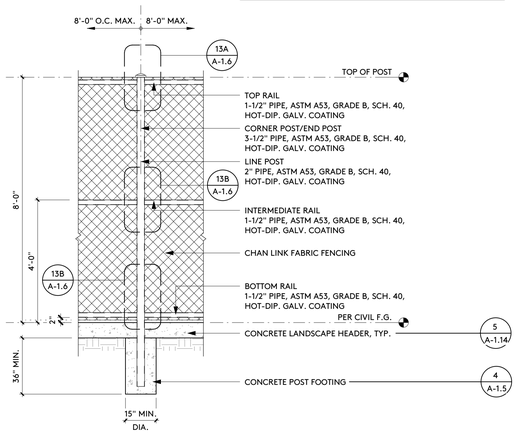

CHAIN LINK FENCE 16

1/2" = 1'-0"

INFILL PANEL ℰ=50% PER ASCE 7, SECTION 26.3.
NO MEMBRANE OR MATERIAL CAN BE ATTACHED OR HUNG TO THE NETTING OR FENCING THAT WOULD EXCEED THE ℰ ABOVE

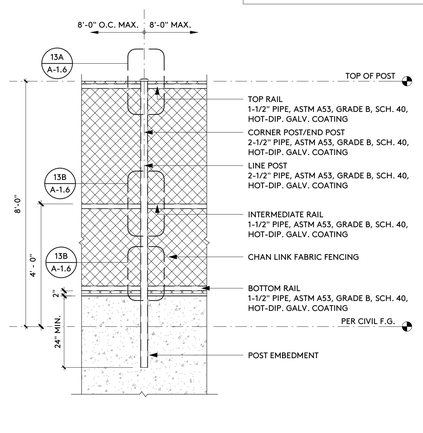

CHAIN LINK FENCE 12

1/2" = 1'-0"

4/13/2023 9:03:08 AM

IDENTIFICATION STAMP
DIV. OF THE STATE ARCHITECT
APP: 03-122664 INC:
REVIEWED FOR
SS ☑ FLS ☑ ACS ☑
DATE: 05/12/2023

pjhm architects

LICENSED ARCHITECT
BARBARA W. FRIES
NO. C15585
REN. 02/25
STATE OF CALIFORNIA

HIGHLAND HIGH SCHOOL
50M POOL & AQUATICS CENTER

KERN HIGH SCHOOL DISTRICT

SITE DETAILS - FENCES & GATES

A-1.6

OC Office: 24461 Ridge Route Drive #100, Laguna Hills, CA 92653 • OC Phone: 949.496.6191 • SD Office: 804 Pier View Way #103, Oceanside, CA 92054 • SD Phone: 760.730.5527 • LA Office: 837 Traction Avenue, #410, Los Angeles, CA 90013 • LA Phone: 213.278.0172 • Web: pjhm.com

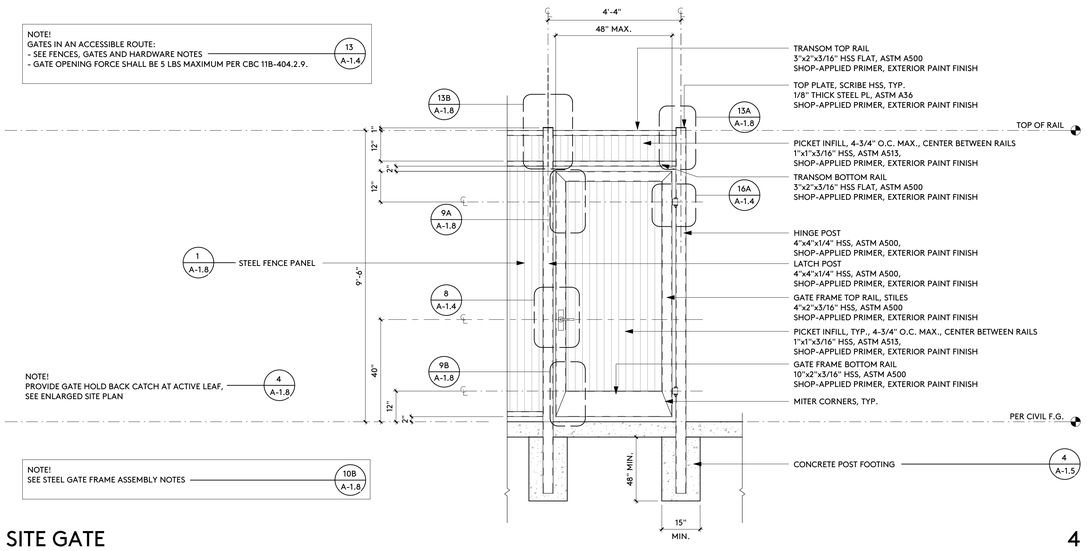

SITE GATE 4

1/2" = 1'-0"

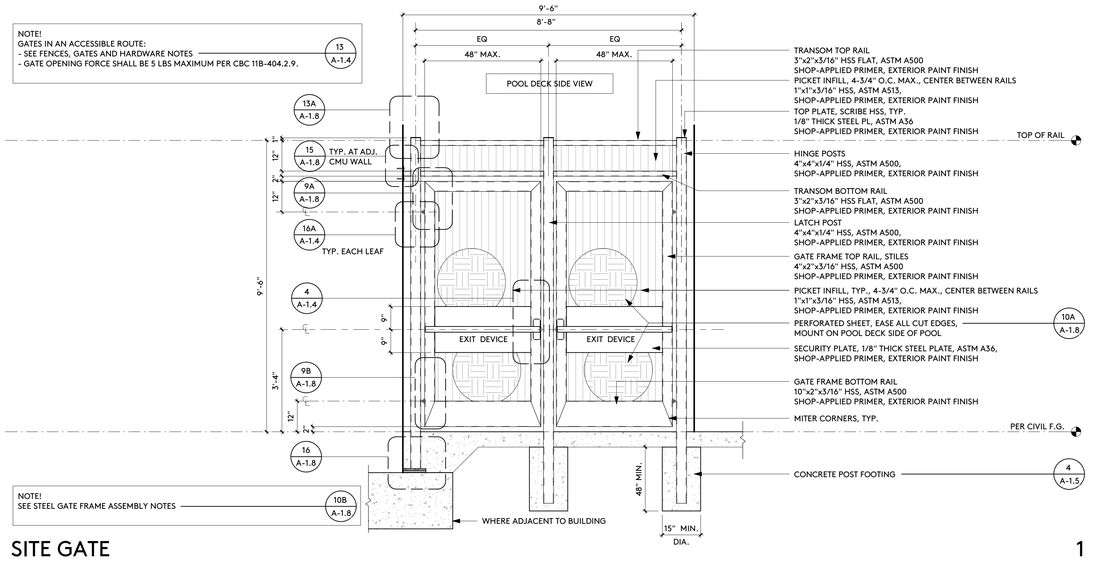

SITE GATE 1

1/2" = 1'-0"

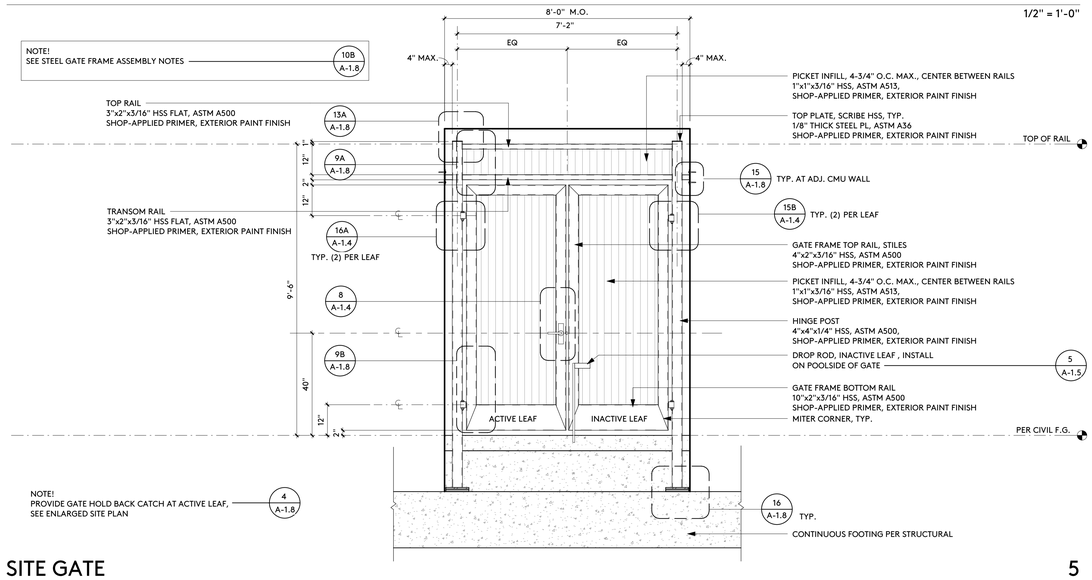

SITE GATE 5

1/2" = 1'-0"

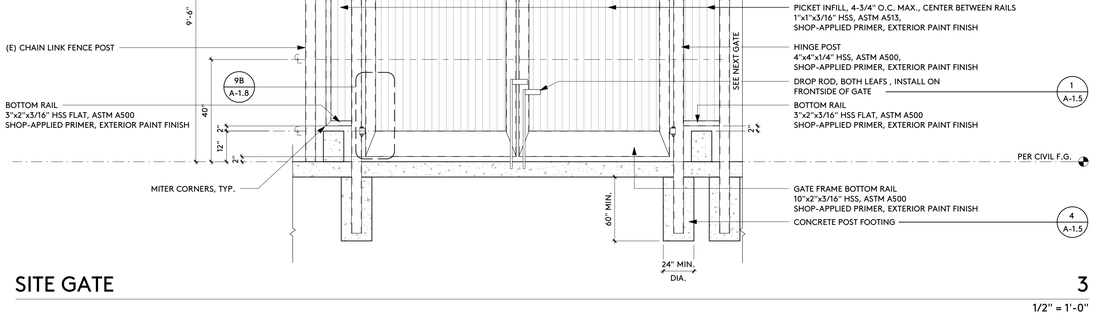

SITE GATE 2

1/2" = 1'-0"

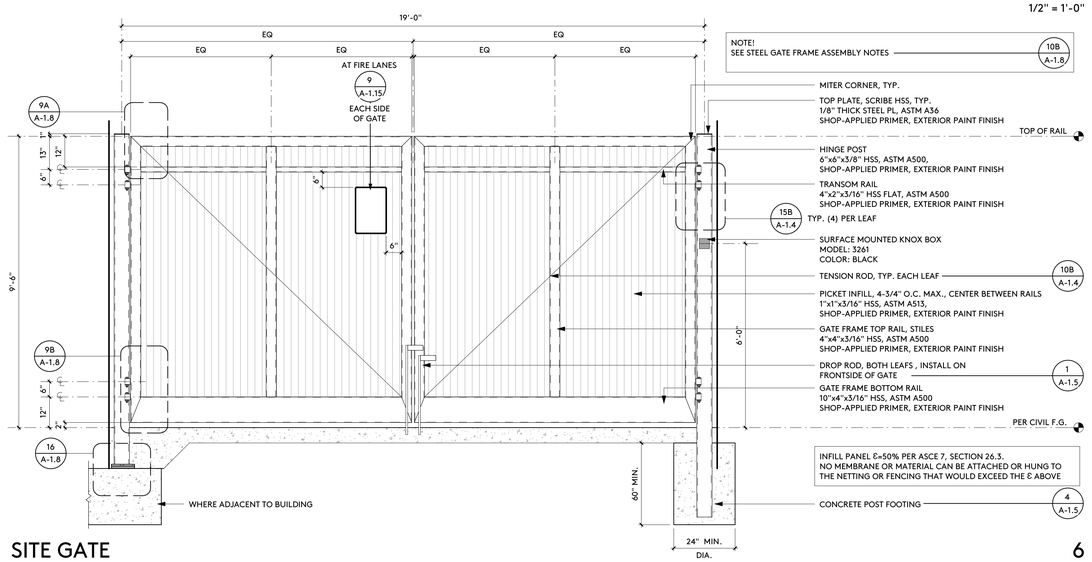

SITE GATE 6

1/2" = 1'-0"

SITE GATE 3

1/2" = 1'-0"

IDENTIFICATION STAMP
DIV. OF THE STATE ARCHITECT
APP: 03-122664 INC:
REVIEWED FOR
SS ☑ FLS ☑ ACS ☑
DATE: 05/12/2023

pjhm architects

LICENSED ARCHITECT
THOMAS W. PHILLIPS
REN. 02/25
STATE OF CALIFORNIA

LA Office: 837 Traction Avenue, #410, Los Angeles, CA 90013 • LA Phone: 213.278.0172 • Web: pjhm.com

SD Phone: 760.730.5527 • OC Office: 24461 Ridge Route Drive #100, Laguna Hills, CA 92653 • OC Phone: 949.496.6191 • SD Office: 804 Pier View Way #103, Oceanside, CA 92054 • SD Phone:

HIGHLAND HIGH SCHOOL
50M POOL & AQUATICS CENTER

KERN HIGH SCHOOL DISTRICT

SITE DETAILS - FENCES & GATES

A-1.7

4/13/2023 9:03:09 AM

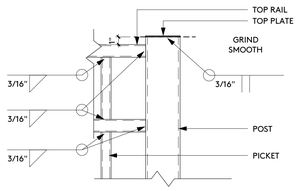

DETAIL 13A

1 1/2" = 1'-0"

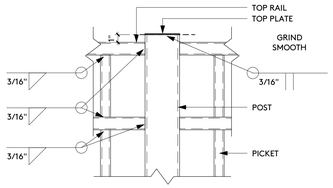

DETAIL 13B

1 1/2" = 1'-0"

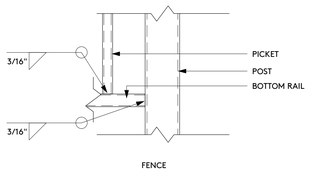

DETAIL 14A

1 1/2" = 1'-0"

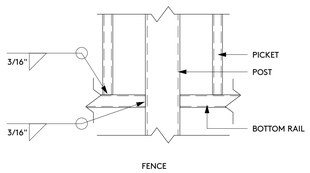

DETAIL 14B

1 1/2" = 1'-0"

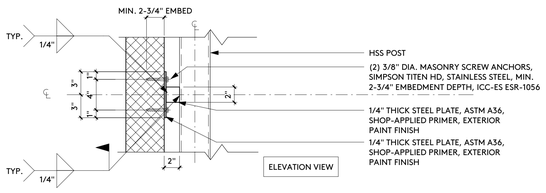

STEEL GATE - FRAME ANCHORAGE 15

1 1/2" = 1'-0"

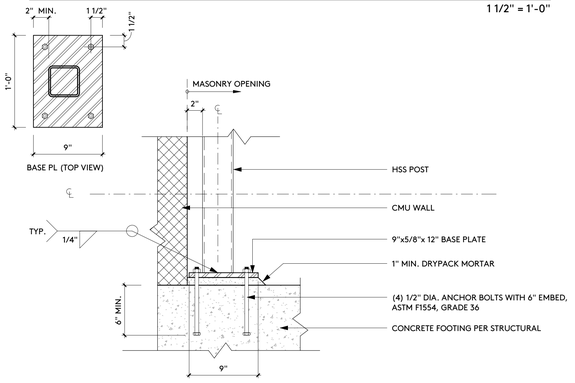

STEEL GATE - HINGE ANCHORAGE 16

1 1/2" = 1'-0"

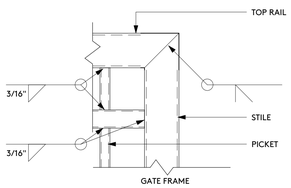

DETAIL 9A

1 1/2" = 1'-0"

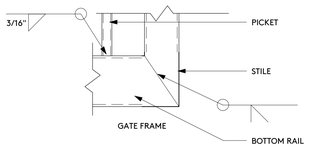

DETAIL 9B

1 1/2" = 1'-0"

MANUFACTURER:	DIAMOND PERFORATED METALS OR EQUAL 7300 W. SUNNYVIEW AVE., VISALIA, CA 93291
MATERIAL:	STAINLESS STEEL, 304 ALLOY
GAUGE:	14
PERF. PATTERN:	1/4" DIAMETER, 5/16" STAGGERED CENTERS
HOLES PER SQ IN:	11.82
OPEN AREA:	58%
ATTACHMENT:	#12-14 x 1" SELF-DRILLING PANCAKE HEAD 410 STAINLESS STEEL SCREWS AT 12" O.C. MAX. EACH WAY, ALIGN WITH PICKETS

PERFORATION SPECIFICATION 10A

1/8" = 1'-0"

1. ALL FENCE AND GATE FRAMES/COMPONENTS SHALL BE: A.E.S.S. LEVEL 3
2. ALL FENCE AND GATE FRAME ASSEMBLIES SHALL BE FULLY WELDED, WELDS ALL AROUND WITH FIILET WELDS, SEE WELDING NOTES — 9 / A-1.4
3. ALL FENCE AND GATE FRAME ASSEMBLIES SHALL BE SHOP-PRIMED AND FIELD PAINTED (TOP COATS)
4. PRODUCT DATA AND SHOP DRAWINGS ARE REQUIRED. APPROVED SUBMITTALS ARE REQUIRED PRIOR TO FABRICATION.

NOTE! STEEL FENCES AND GATES ASSEMBLY 10B

1/8" = 1'-0"

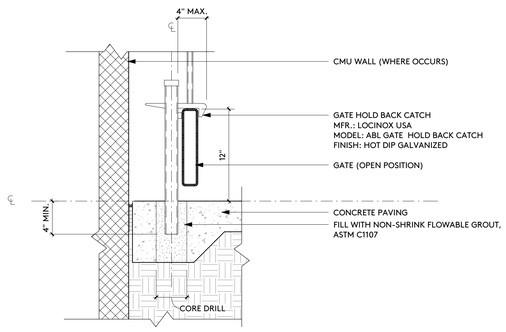

GATE HOLD-OPEN ANCHORAGE 4

1 1/2" = 1'-0"

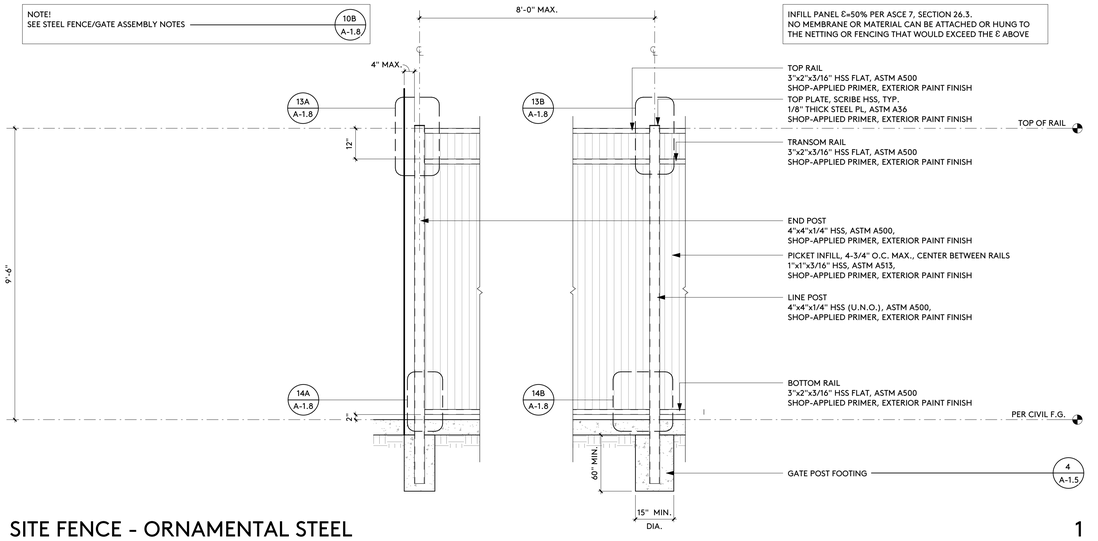

SITE FENCE - ORNAMENTAL STEEL 1

1/2" = 1'-0"

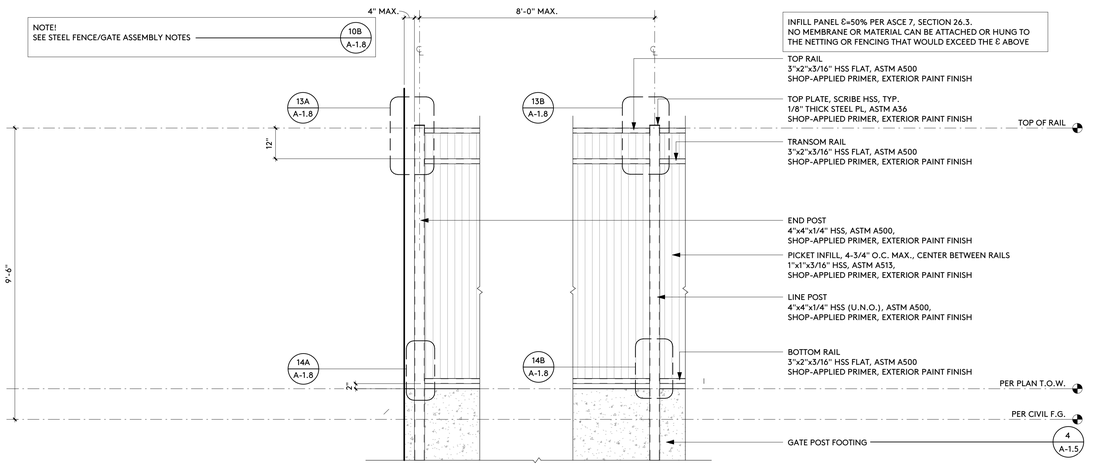

SITE FENCE - ORNAMENTAL STEEL 2

1/2" = 1'-0"

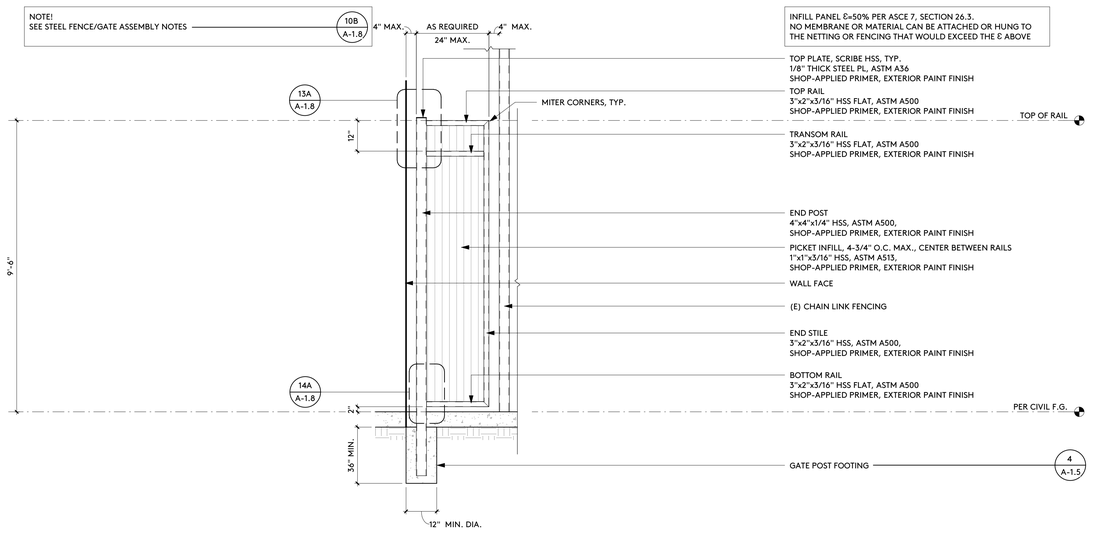

SITE FENCE - ORNAMENTAL STEEL 3

1/2" = 1'-0"

IDENTIFICATION STAMP
DIV. OF THE STATE ARCHITECT
APP: 03-122664 INC:
REVIEWED FOR
SS ☑ FLS ☑ ACS ☑
DATE: 05/12/2023

pjhm architects

LICENSED ARCHITECT
BARBARA W. FRIED
NO. C15585
REN. 02/25
STATE OF CALIFORNIA

HIGHLAND HIGH SCHOOL
50M POOL & AQUATICS CENTER

KERN HIGH SCHOOL DISTRICT

SITE DETAILS - FENCES & GATES

A-1.8

OC Office: 24461 Ridge Route Drive #100, Laguna Hills, CA 92653 • OC Phone: 949.496.6191 • SD Office: 804 Pier View Way #103, Oceanside, CA 92054 • SD Phone: 760.730.5527 • LA Office: 837 Traction Avenue, #410, Los Angeles, CA 90013 • LA Phone: 213.278.0172 • Web: pjhm.com

4/13/2023 9:03:10 AM

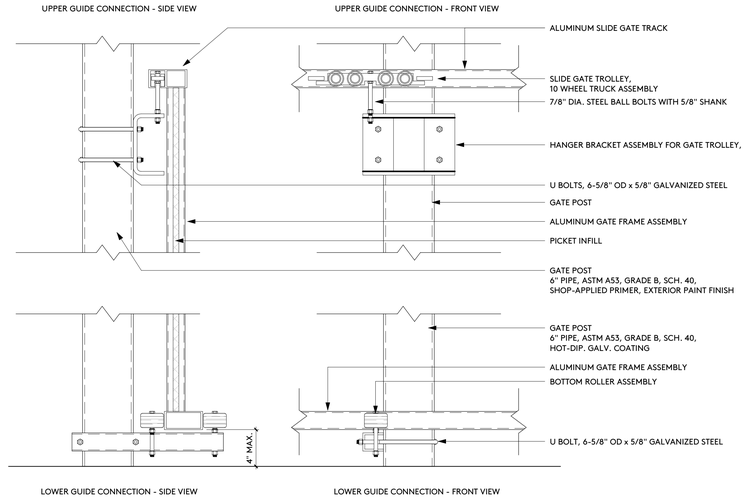

SITE GATE HARDWARE

1 1/2" = 1'-0"

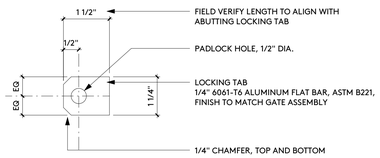

GATE HARDWARE - LOCKING TAB PROFILE 15

6" = 1'-0"

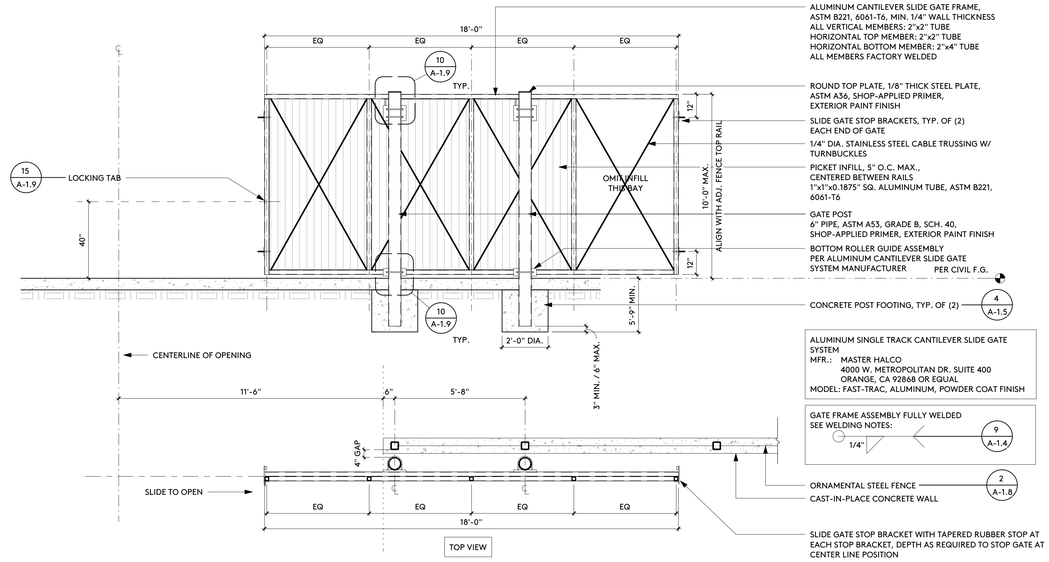

10 SITE GATE

3/8" = 1'-0"

IDENTIFICATION STAMP
DIV. OF THE STATE ARCHITECT
APP: 03-122664 INC:
REVIEWED FOR
SS ☑ FLS ☑ ACS ☑
DATE: 05/12/2023

pjhm architects

LICENSED ARCHITECT
THOMAS W. PHILLIPS
No. C15585
REN. 02/25
STATE OF CALIFORNIA

LA Office: 837 Traction Avenue, #410, Los Angeles, CA 90013 • LA Phone: 213.278.0172 • Web: pjhm.com
SD Phone: 760.730.5527 • SD Office: 804 Pier View Way #103, Oceanside, CA 92054
OC Office: 24461 Ridge Route Drive #100, Laguna Hills, CA 92653 • OC Phone: 949.496.6191 • SD Office: 804 Pier View Way #103, Oceanside, CA 92054

HIGHLAND HIGH SCHOOL
50M POOL & AQUATICS CENTER

KERN HIGH SCHOOL DISTRICT

SITE DETAILS - FENCES & GATES

A-1.9

4/13/2023 9:05:11 AM

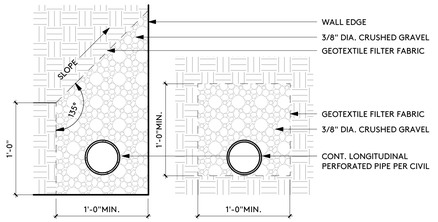

SITE WALL SUB-GRADE DRAIN 5

1 1/2" = 1'-0"

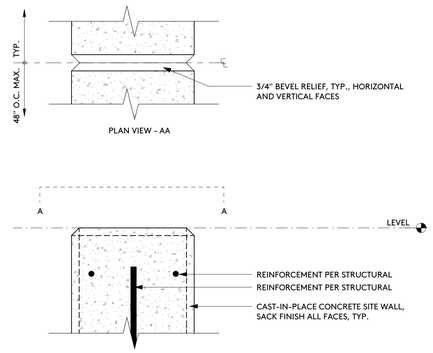

SITE WALL DETAIL 1

3" = 1'-0"

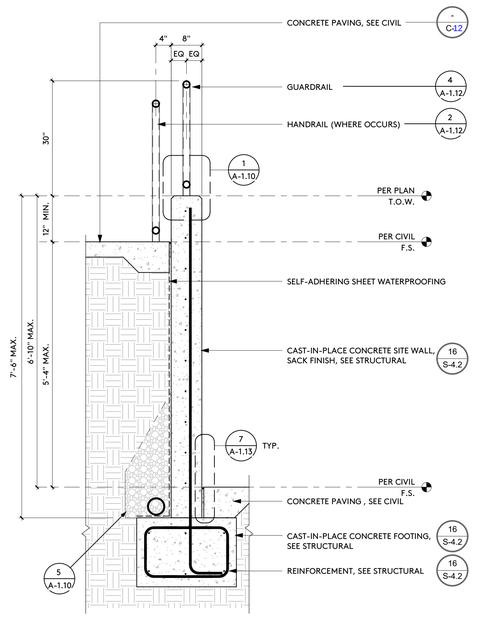

SITE WALL SECTION 16

3/4" = 1'-0"

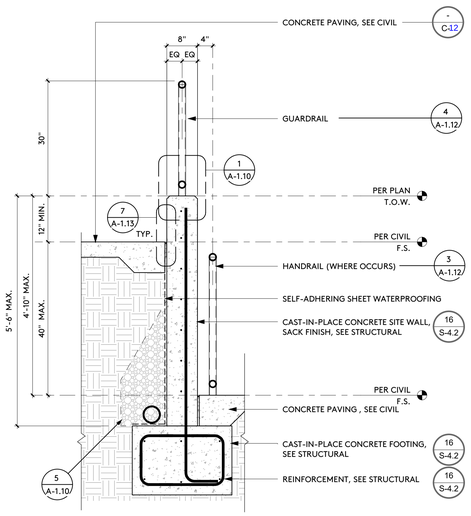

SITE WALL SECTION 12

3/4" = 1'-0"

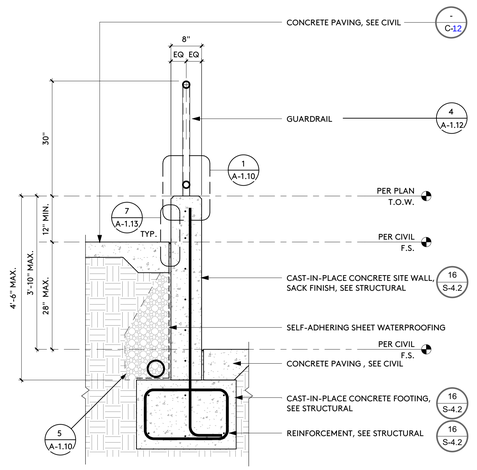

SITE WALL SECTION 8

3/4" = 1'-0"

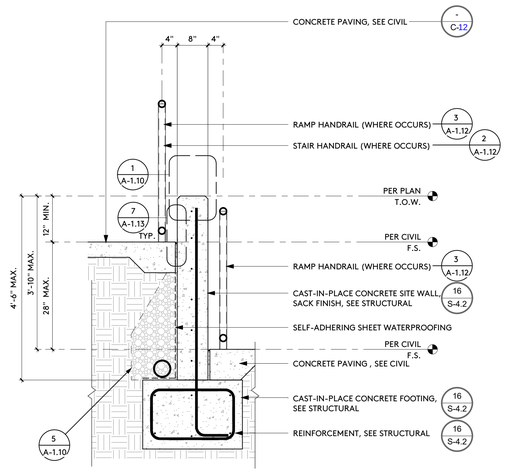

SITE WALL SECTION 4

3/4" = 1'-0"

IDENTIFICATION STAMP
DIV. OF THE STATE ARCHITECT
APP: 03-122664 INC:
REVIEWED FOR
SS ☑ FLS ☑ ACS ☑
DATE: 05/12/2023

pjhm architects

LICENSED ARCHITECT
BARBARA W. FRIEDMAN
No. C15585
REN. 02/25
STATE OF CALIFORNIA

OC Office: 24461 Ridge Route Drive #100, Laguna Hills, CA 92653 • SD Phone: 760.730.5527 • LA Office: 837 Traction Avenue, #410, Los Angeles, CA 90013 • LA Phone: 213.278.0172 • Web: pjhm.com

HIGHLAND HIGH SCHOOL
50M POOL & AQUATICS CENTER

KERN HIGH SCHOOL DISTRICT

OC Office: 24461 Ridge Route Drive #100, Laguna Hills, CA 92653 • OC Phone: 949.496.6191 • SD Office: 804 Pier View Way #103, Oceanside, CA 92054

SITE DETAILS - SITE WALLS

A-1.10

4/13/2023 9:05:11 AM

IDENTIFICATION STAMP
DIV. OF THE STATE ARCHITECT
APP: 03-122664 INC:
REVIEWED FOR
SS ☑ FLS ☑ ACS ☑
DATE: 05/12/2023

pjhm architects

LICENSED ARCHITECT
THOMAS W. PHILLIPS
NO. C15585
REN. 02/25
STATE OF CALIFORNIA

SD Phone: 760.730.5527 • LA Office: 837 Traction Avenue, #410, Los Angeles, CA 90013 • LA Phone: 213.278.0172 • Web: pjhm.com

OC Office: 24461 Ridge Route Drive #100, Laguna Hills, CA 92653 • OC Phone: 949.496.6191 • SD Office: 804 Pier View Way #103, Oceanside, CA 92054

HIGHLAND HIGH SCHOOL
50M POOL & AQUATICS CENTER

KERN HIGH SCHOOL DISTRICT

SITE DETAILS - SITE WALLS

A-1.11

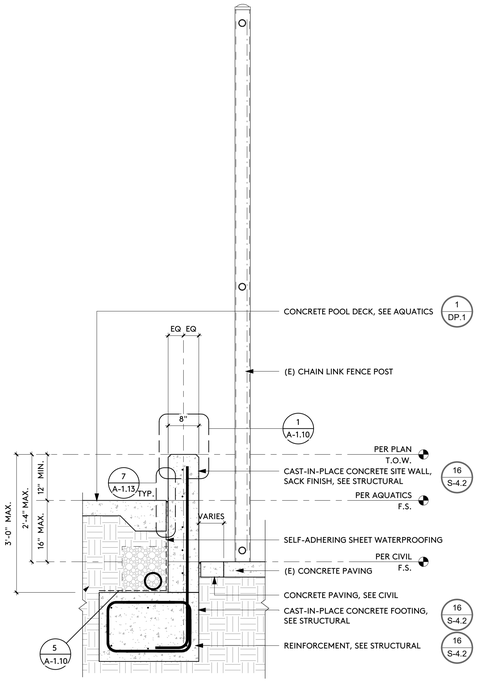

SITE WALL SECTION 16

3/4" = 1'-0"

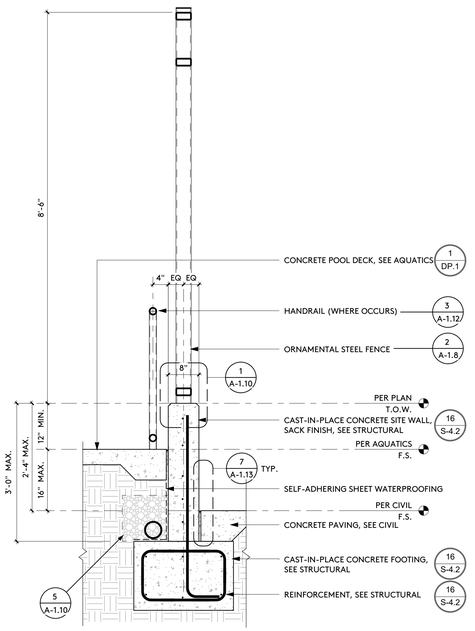

SITE WALL SECTION 12

3/4" = 1'-0"

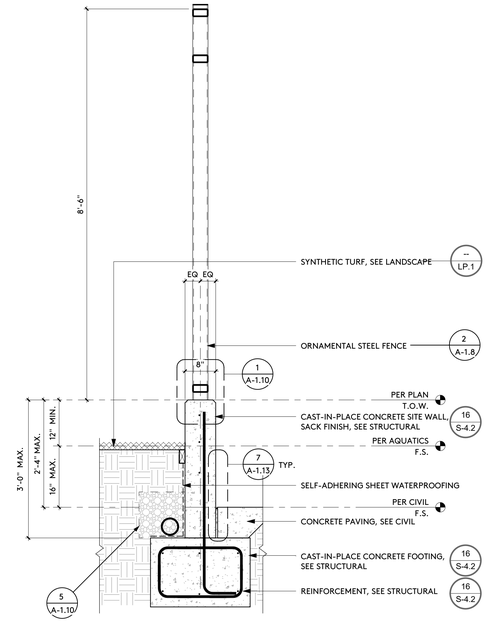

SITE WALL SECTION 8

3/4" = 1'-0"

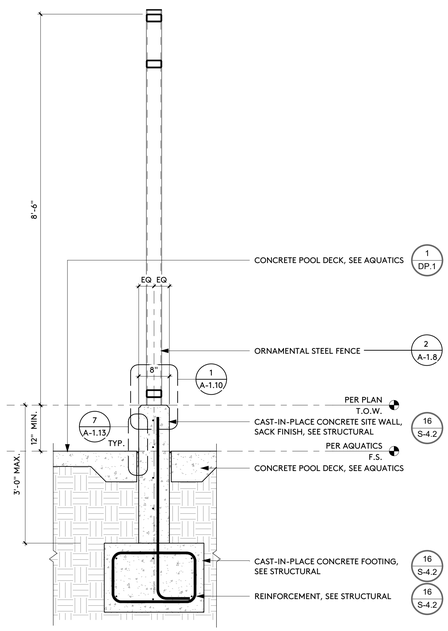

SITE WALL SECTION 4

3/4" = 1'-0"

4/13/2023 9:03:12 AM

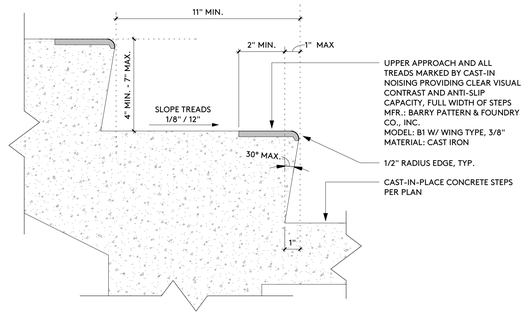

STAIR NOSING 6

3" = 1'-0"

NOTE!
HANDRAIL GRIPPING SURFACES AND ANY SURFACES ADJACENT TO THEM SHALL BE FREE OF SHARP OR ABRASIVE ELEMENTS AND SHALL BE HAVE ROUNDED EDGES. PER CBC 2019, 11B-505.8.

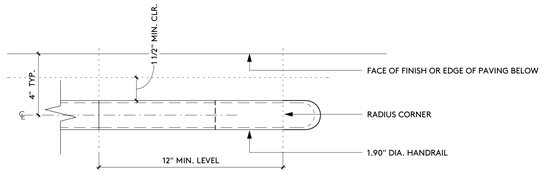

TOP VIEW - POST MOUNTED

HANDRAIL TERMINATION 7

3" = 1'-0"

NOTE!
HANDRAIL GRIPPING SURFACES AND ANY SURFACES ADJACENT TO THEM SHALL BE FREE OF SHARP OR ABRASIVE ELEMENTS AND SHALL BE HAVE ROUNDED EDGES. PER CBC 2019, 11B-505.8.

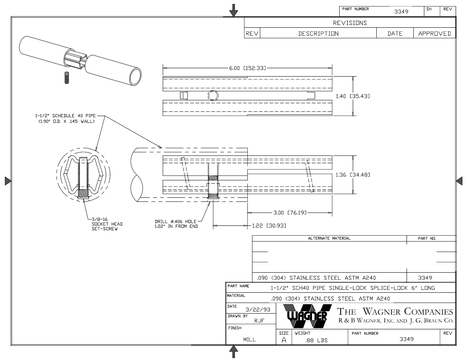

HANDRAIL TERMINATION 11

3" = 1'-0"

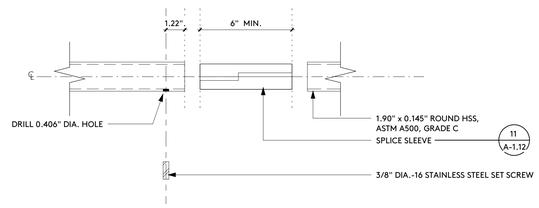

HANDRAIL TERMINATION 9

3" = 1'-0"

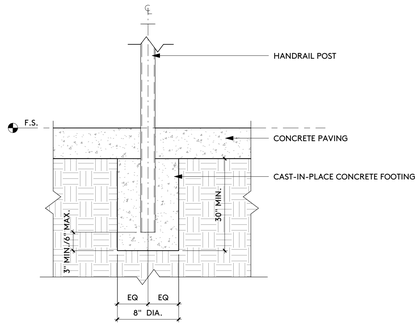

ANCHORAGE - POST MOUNTED HANDRAIL 5

1 1/2" = 1'-0"

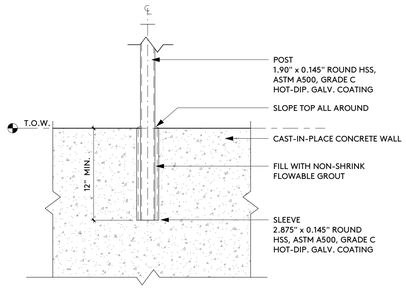

ANCHORAGE - POST MOUNTED HANDRAIL 8

1 1/2" = 1'-0"

1. ALL GUARDRAIL AND HANDRAIL FRAMES/COMPONENTS SHALL BE: A.E.S.S. LEVEL 3
2. ALL GUARDRAIL AND HANDRAIL FRAME ASSEMBLIES SHALL BE FULLY WELDED, WELDS ALL AROUND WITH FILLET WELDS, SEE WELDING NOTES — 9 A-1.4
3. ALL GUARDRAIL AND HANDRAIL FRAME ASSEMBLIES SHALL BE HOT-DIP GALVANIZED AFTER COMPLETE FABRICATION. COLD GALVANIZING WILL NOT BE PERMITTED
4. PRODUCT DATA AND SHOP DRAWINGS ARE REQUIRED. APPROVED SUBMITTALS ARE REQUIRED PRIOR TO FABRICATION.

IDENTIFICATION STAMP
DIV. OF THE STATE ARCHITECT
APP: 03-122664 INC:
REVIEWED FOR
SS ☑ FLS ☑ ACS ☑
DATE: 05/12/2023

NOTE! GUARDRAIL AND HANDRAIL ASSEMBLY 1

1/8" = 1'-0"

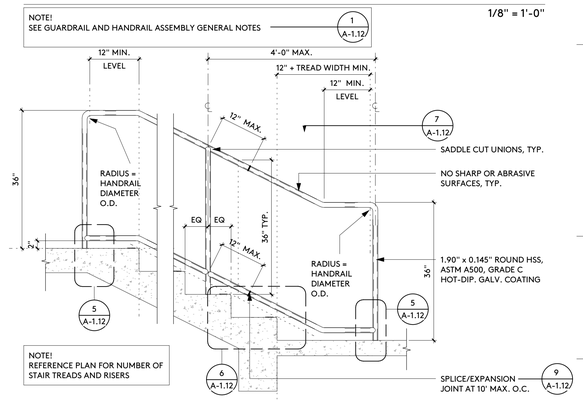

HANDRAIL ELEVATION - POST MOUNT 2

3/4" = 1'-0"

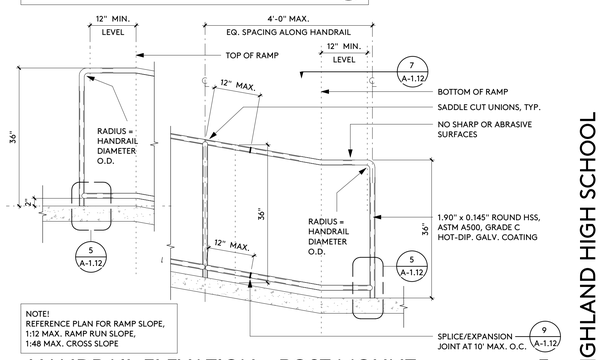

HANDRAIL ELEVATION - POST MOUNT 3

3/4" = 1'-0"

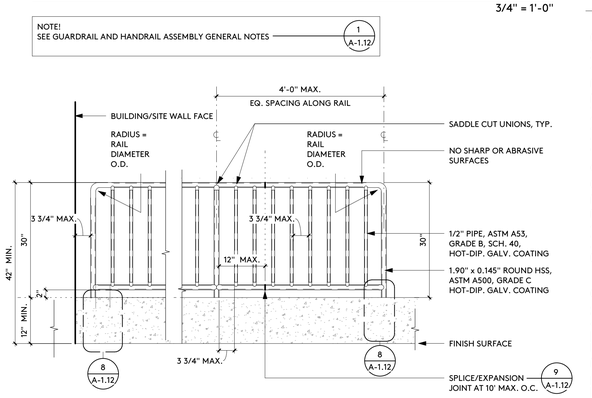

GUARDRAIL ELEVATION - POST MOUNT 4

3/4" = 1'-0"

pjhm architects

LICENSED ARCHITECT
BARBARA W. FRIES
NO. C15585
REN. 02/25
STATE OF CALIFORNIA

HIGHLAND HIGH SCHOOL
50M POOL & AQUATICS CENTER

KERN HIGH SCHOOL DISTRICT

SITE DETAILS - GUARDS & HANDRAILS

A-1.12

OC Office: 24461 Ridge Route Drive #100, Laguna Hills, CA 92653 • OC Phone: 949.496.6191 • SD Office: 804 Pier View Way #103, Oceanside, CA 92054 • SD Phone: 760.730.5527 • LA Office: 837 Traction Avenue, #410, Los Angeles, CA 90013 • LA Phone: 213.278.0172 • Web: pjhm.com

4/13/2023 9:03:14 AM

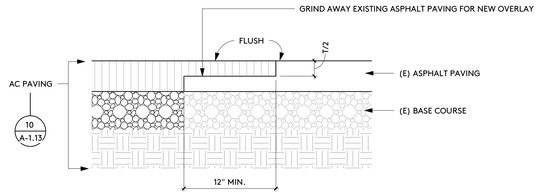

AC PAVING - CONSTRUCTION JOINT 13

1 1/2" = 1'-0"

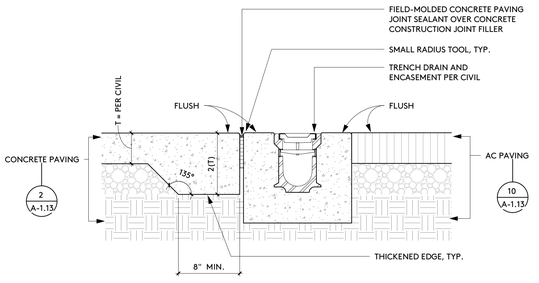

TRENCH DRAIN 14

1 1/2" = 1'-0"

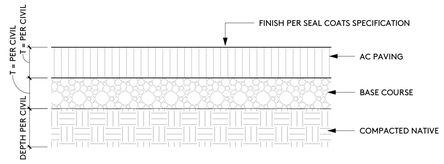

AC PAVING AT NON-APPARATUS ACCESS ROADWAY

AC PAVING 10

1 1/2" = 1'-0"

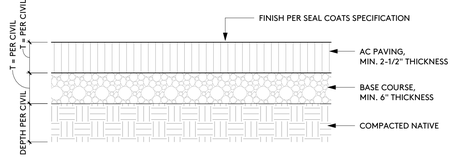

AC PAVING AT APPARATUS ACCESS ROADWAY

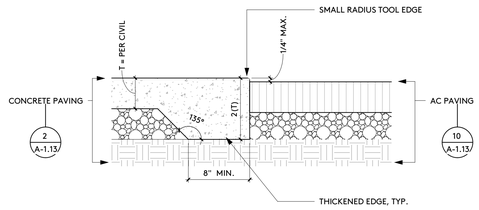

CONSTRUCTION JOINT - CONCRETE/AC 11

1 1/2" = 1'-0"

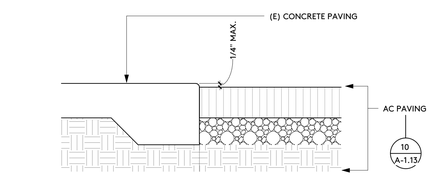

CONSTRUCTION JOINT - CONCRETE/AC 12

1 1/2" = 1'-0"

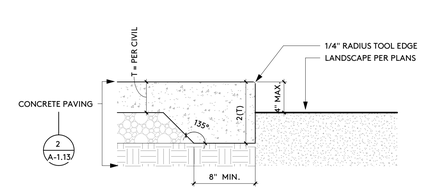

CONCRETE PAVING - SLAB EDGE 5

1 1/2" = 1'-0"

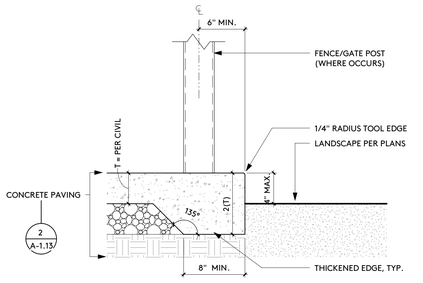

CONCRETE PAVING - SLAB EDGE 6

1 1/2" = 1'-0"

CONCRETE PAVING - SLAB EDGE 7

1 1/2" = 1'-0"

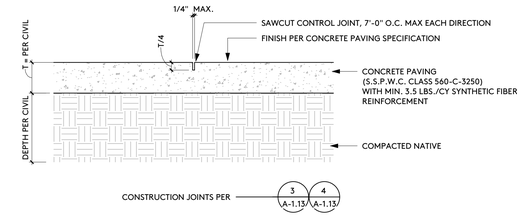

CONCRETE PAVING AT NON-APPARATUS ACCESS ROADWAY

CONCRETE PAVING 2

1 1/2" = 1'-0"

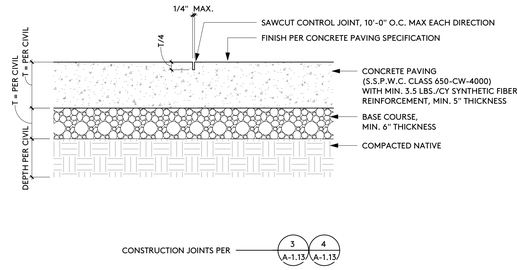

CONCRETE PAVING AT APPARATUS ACCESS ROADWAY

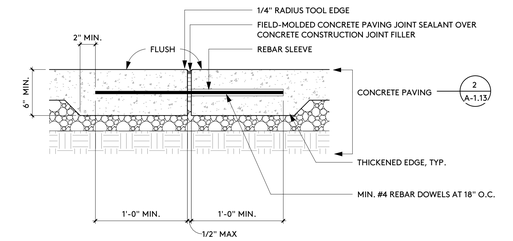

CONCRETE PAVING - CONSTRUCTION JOINT 3

1 1/2" = 1'-0"

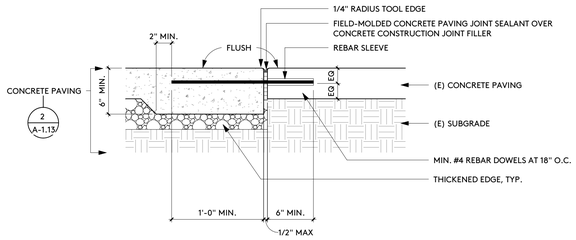

CONCRETE PAVING - CONSTRUCTION JOINT 4

1 1/2" = 1'-0"

IDENTIFICATION STAMP
DIV. OF THE STATE ARCHITECT
APP: 03-122664 INC:
REVIEWED FOR
SS ☑ FLS ☑ ACS ☑
DATE: 05/12/2023

pjhm architects

LICENSED ARCHITECT
THOMAS W. PHILLIPS
NO. C 25585
REN. 02/25
STATE OF CALIFORNIA

HIGHLAND HIGH SCHOOL
50M POOL & AQUATICS CENTER

KERN HIGH SCHOOL DISTRICT

SITE DETAILS - HARDSCAPE

A-1.13

OC Office: 24461 Ridge Route Drive #100, Laguna Hills, CA 92653 • OC Phone: 949.496.6191 • SD Office: 804 Pier View Way #103, Oceanside, CA 92054 • SD Phone: 760.730.5527 • LA Office: 837 Traction Avenue, #410, Los Angeles, CA 90013 • LA Phone: 213.278.0172 • Web: pjhm.com

4/13/2023 2:58:30 PM

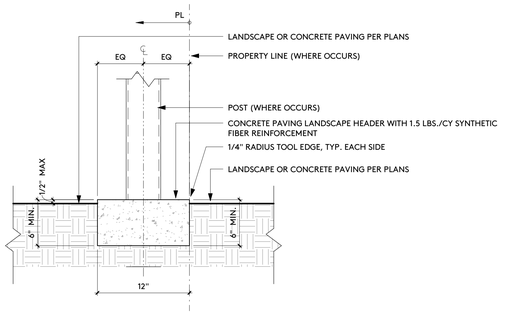

LANDSCAPE HEADER - CONCRETE 5

1 1/2" = 1'-0"

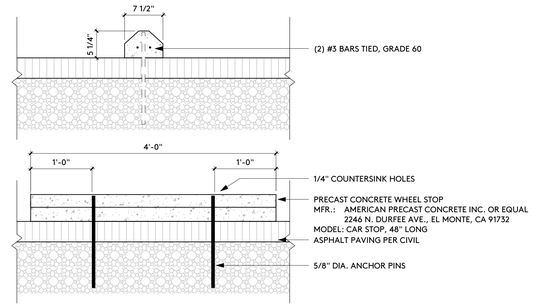

WHEEL STOP 6

1" = 1'-0"

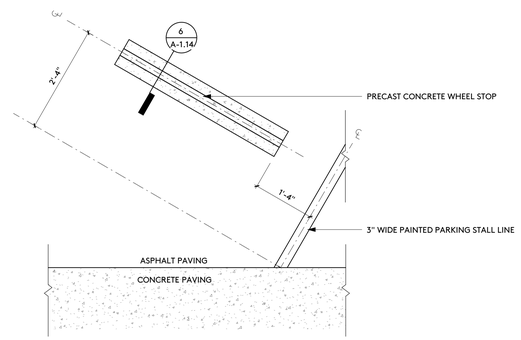

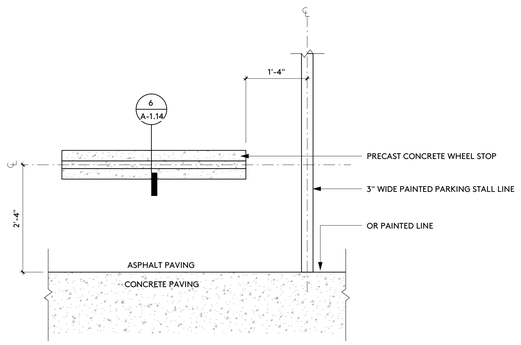

WHEEL STOP 8

3/4" = 1'-0"

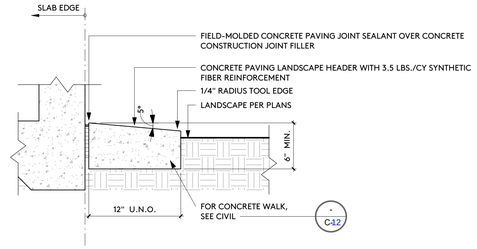

LANDSCAPE HEADER - CONCRETE 2

1 1/2" = 1'-0"

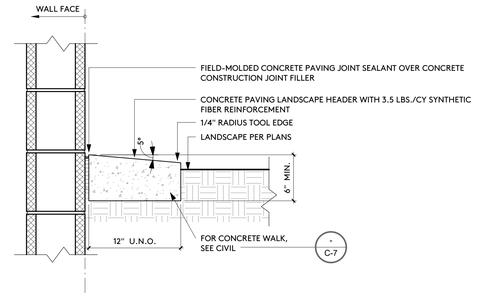

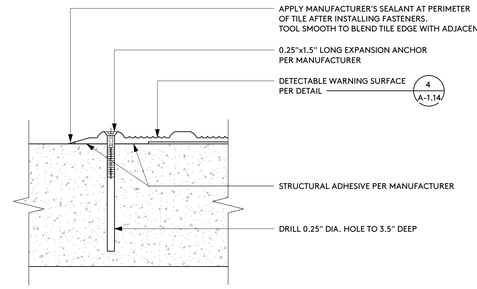

DETECTABLE WARNING SURFACE 3

6" = 1'-0"

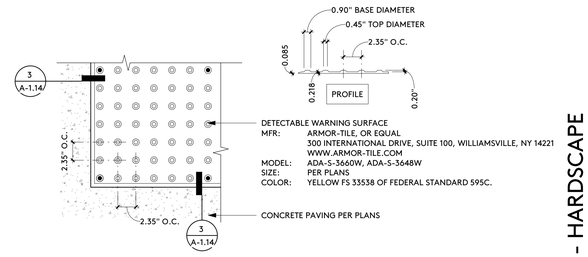

DETECTABLE WARNING SURFACES:

1. DETECTABLE WARNING SURFACES SHALL COMPLY WITH CBC SECTION 11B-705.1
2. DETECTABLE WARNING SURFACES AT TRANSIT BOARDING PLATFORM EDGES, BUS STOPS, HAZARDOUS VEHICULAR AREAS, REFLECTING POOLS, AND TRACK CROSSINGS SHALL BE YELLOW AND APPROXIMATE FS 33538 OF FEDERAL STANDARD 595C.
3. DETECTABLE WARNING SURFACES SHALL DIFFER FROM ADJOINING SURFACES IN RESILIENCY OR SOUND-ON-CANE CONTACT. SUCH CONSTRAINT SHALL NOT BE REQUIRED FOR DETECTABLE WARNING SURFACES AT CURB RAMPS, ISLANDS, OR CUT-THROUGH MEDIANS. CBC SECTION 11B-705.1.1.4
4. PROVIDE MINIMUM 5 YEAR WARRANTY.

DETECTABLE WARNING SURFACE 4

1 1/2" = 1'-0"

IDENTIFICATION STAMP
DIV. OF THE STATE ARCHITECT
APP: 03-122664 INC:
REVIEWED FOR
SS ☑ FLS ☑ ACS ☑
DATE: 05/12/2023

pjhm architects
LICENSED ARCHITECT
THOMAS W. PHILLIPS
NO. C 15585
REN. 02/25
STATE OF CALIFORNIA
LA Office: 837 Traction Avenue, #410, Los Angeles, CA 90013 • LA Phone: 213.278.0172 • Web: pjhm.com
SD Office: 804 Pier View Way #103, Oceanside, CA 92054 • SD Phone: 949.496.6191 • OC Phone: 760.730.5527 • OC Office: 24461 Ridge Route Drive #100, Laguna Hills, CA 92653

HIGHLAND HIGH SCHOOL
50M POOL & AQUATICS CENTER

KERN HIGH SCHOOL DISTRICT

SITE DETAILS - HARDSCAPE

A-1.14

4/13/2023 9:03:15 AM

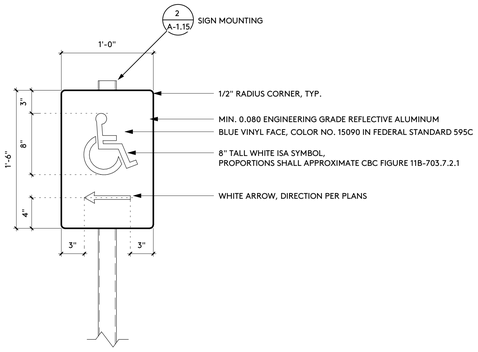

SITE SIGNAGE - DIRECTIONAL SIGN 13

1 1/2" = 1'-0"

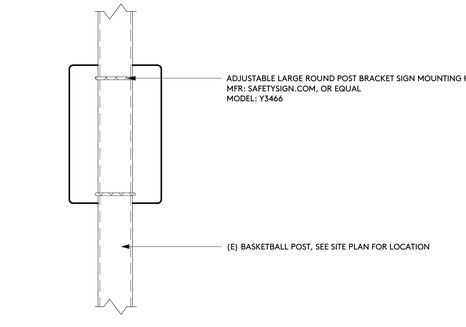

REAR ELEVATION

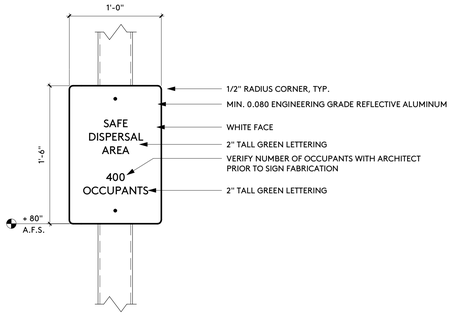

FRONT ELEVATION

SITE SIGNAGE - SAFE DISPERSAL AREA 15

1 1/2" = 1'-0"

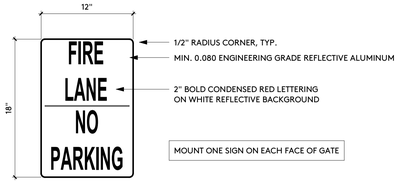

SITE SIGNAGE - FIRE LANE ENTRY - GATES 9

1 1/2" = 1'-0"

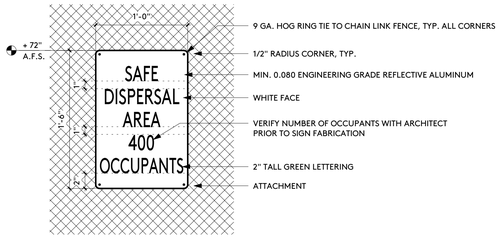

SITE SIGNAGE - SAFE DISPERSAL AREA 10

1 1/2" = 1'-0"

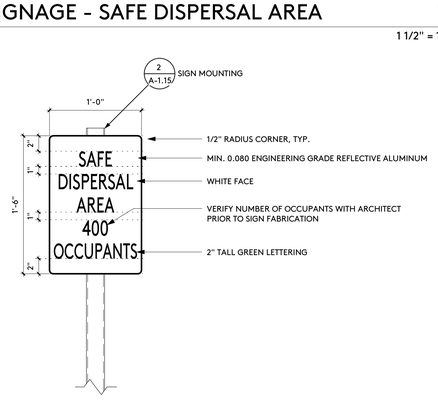

SITE SIGNAGE - SAFE DISPERSAL AREA 11

1 1/2" = 1'-0"

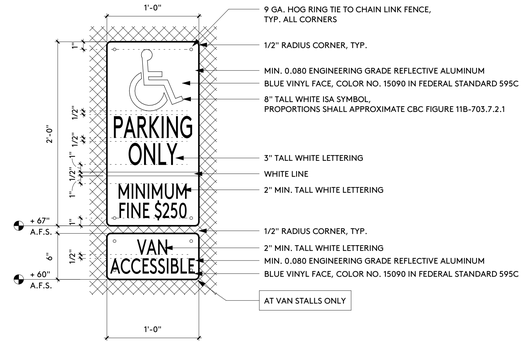

SITE SIGNAGE - ACCESSIBLE PARKING 5

1 1/2" = 1'-0"

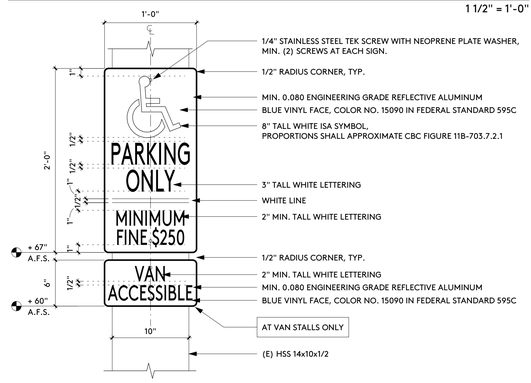

SITE SIGNAGE - ACCESSIBLE PARKING 6

1 1/2" = 1'-0"

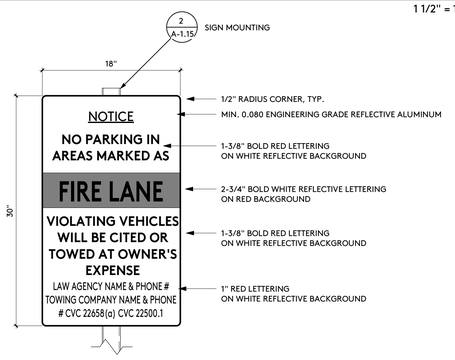

SITE SIGNAGE - FIRE LANE ENTRY 7

1 1/2" = 1'-0"

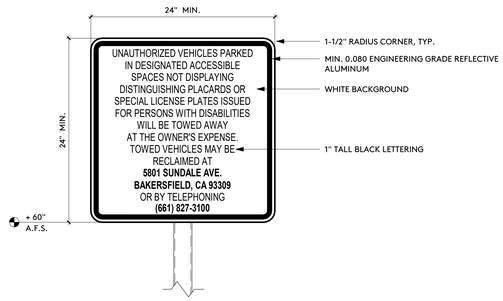

(E) SITE SIGNAGE - TOW AWAY 8

1 1/2" = 1'-0"

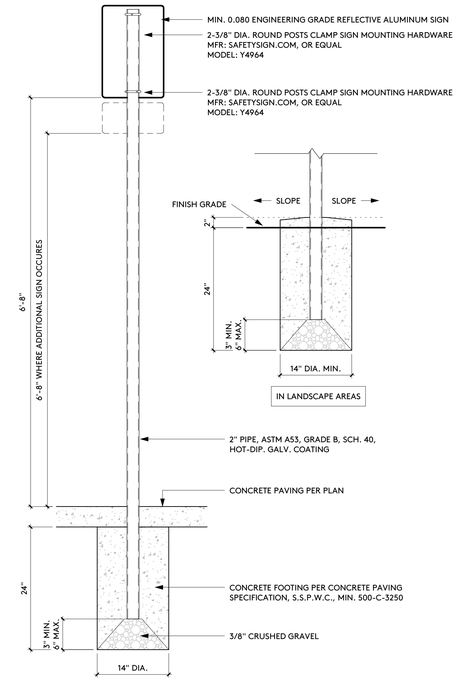

POST MOUNTED 2

1" = 1'-0"

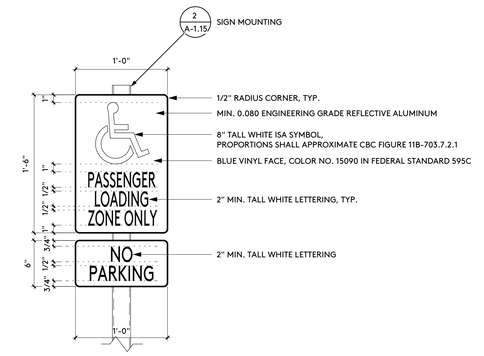

SITE SIGNAGE - PASSENGER LOADING ZONE 3

1 1/2" = 1'-0"

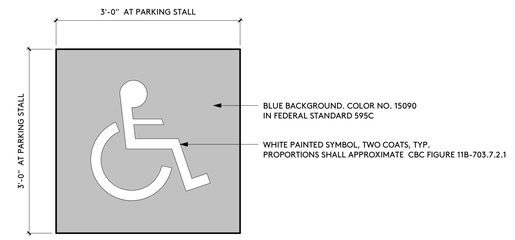

SITE SIGNAGE - INTERNATIONAL SYMBOL OF ACCESSIBILITY 4

1" = 1'-0"

IDENTIFICATION STAMP
DIV. OF THE STATE ARCHITECT
APP: 03-122664 INC:
REVIEWED FOR
SS ☑ FLS ☑ ACS ☑
DATE: 05/12/2023

pjhm architects
LICENSED ARCHITECT
BARBARA W. PARRISH
NO. C15585
REN. 02/25
STATE OF CALIFORNIA
LA Office: 837 Traction Avenue, #410, Los Angeles, CA 90013 • LA Phone: 213.278.0172 • Web: pjhm.com
SD Phone: 760.730.5527 • OC Office: 24461 Ridge Route Drive #100, Laguna Hills, CA 92653 • OC Phone: 949.496.6191 • SD Office: 804 Pier View Way #103, Oceanside, CA 92054

HIGHLAND HIGH SCHOOL
50M POOL & AQUATICS CENTER

KERN HIGH SCHOOL DISTRICT

SITE DETAILS - SIGNAGE

A-1.15

4/13/2023 9:03:15 AM

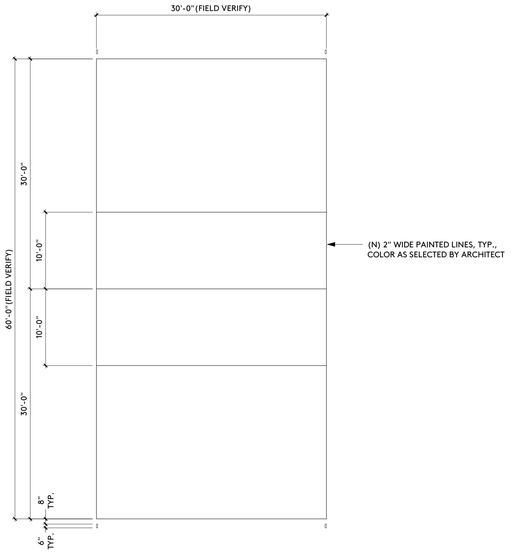

VOLLEYBALL COURT LAYOUT

1/8" = 1'-0"

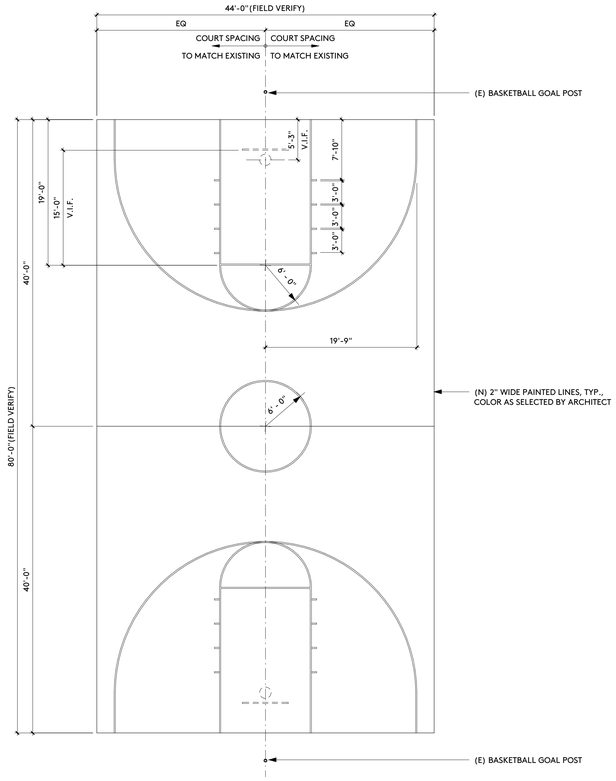

BASKETBALL COURT LAYOUT

1/8" = 1'-0"

IDENTIFICATION STAMP
DIV. OF THE STATE ARCHITECT
APP: 03-122664 INC:
REVIEWED FOR
SS ☑ FLS ☑ ACS ☑
DATE: 05/12/2023

pjhm architects

LICENSED ARCHITECT
THOMAS W. PHILLIPS
NO. C15585
REN. 02/25
STATE OF CALIFORNIA

SD Phone: 760.730.5527 • LA Office: 837 Traction Avenue, #410, Los Angeles, CA 90013 • LA Phone: 213.278.0172 • Web: pjhm.com

OC Office: 24461 Ridge Route Drive #100, Laguna Hills, CA 92653 • OC Phone: 949.496.6191 • SD Office: 804 Pier View Way #103, Oceanside, CA 92054

HIGHLAND HIGH SCHOOL
50M POOL & AQUATICS CENTER

KERN HIGH SCHOOL DISTRICT

SITE DETAILS - MISCELLANEOUS

A-1.16

2

4

4/13/2023 9:03:15 AM

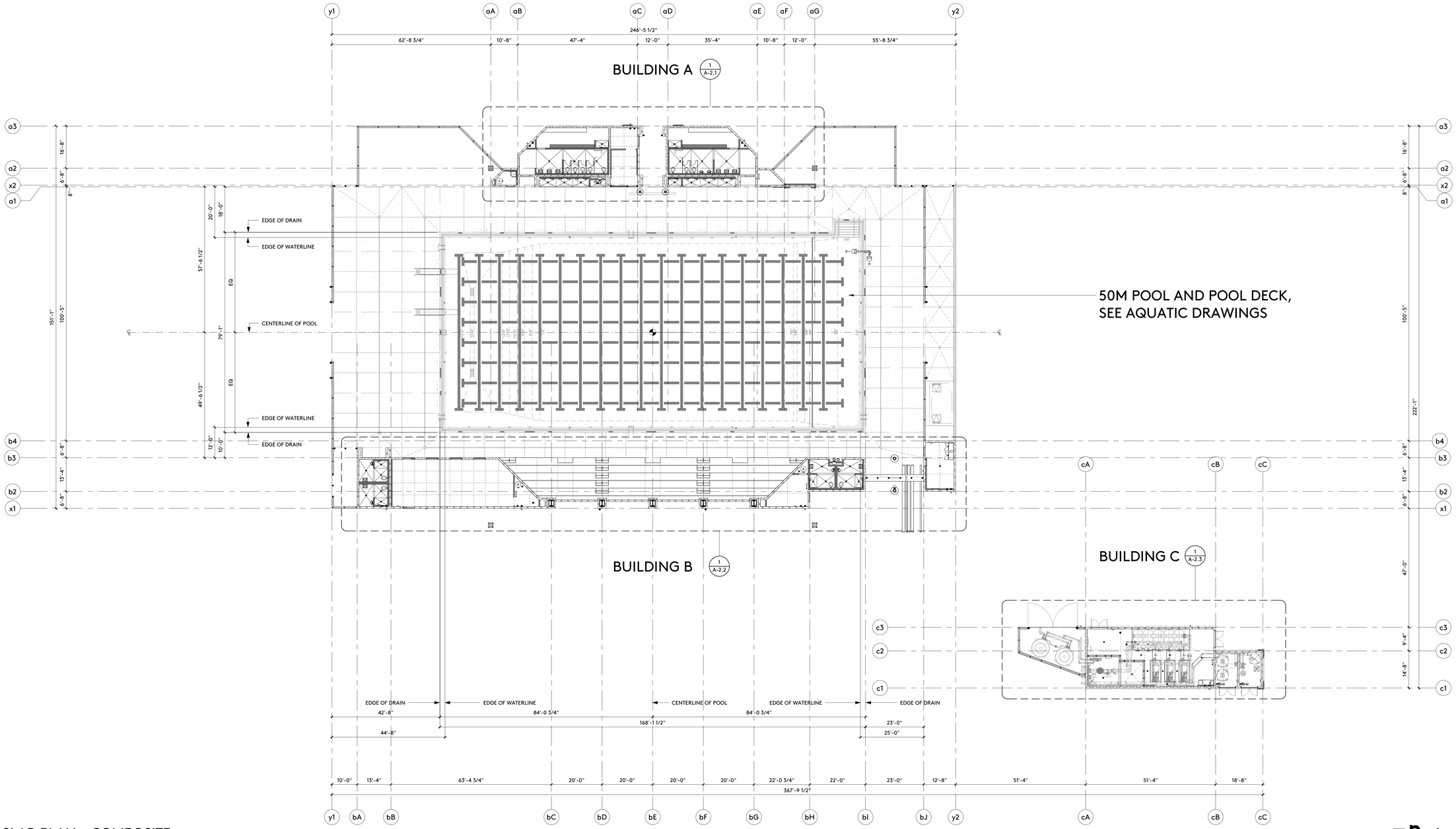

1/16" = 1'-0"

SLAB PLAN - COMPOSITE

CONCRETE SLAB ON GRADE
CONTROL JOINT PER STRUCTURAL DETAIL 15 / S-1.1

CONCRETE SLAB DEPRESSION, DEPTH AS INDICATED

CONCRETE CURB, 6" A.F.F., UNLESS NOTED OTHERWISE

CAST-IN PLACE CONCRETE WALL ASSEMBLY

8" CONCRETE MASONRY UNIT WALL ASSEMBLY

AREA OF WATERPROOF MEMBRANE
BELOW CERAMIC FLOOR TILE, SEE 2 / A-2.4

NOTE!
ALL WALLS ENCLOSING THIS AREA SHALL
RECEIVE WATERPROOF MEMBRANE, FULL
HEIGHT OF WALL, SEE TILING SPECIFICATION

F.D. FLOOR DRAIN

F.S. FLOOR SINK

1 / A-1.1 DETAIL REFERENCE NUMBER, SHEET REFERENCE NUMBER

A BUILDING GRIDLINE

6'-0" BUILDING DIMENSION

1 / A-1.1 SIM BUILDING SECTION REFERENCE NUMBER, SHEET REFERENCE NUMBER, SIMILAR SECTION

+14"-0" ELEVATION ABOVE FINISH FLOOR +0"-0"
ELEVATION BELOW FINISH FLOOR -0"-0"

SYMBOLS

IDENTIFICATION STAMP
DIV. OF THE STATE ARCHITECT
APP: 03-122664 INC:
REVIEWED FOR
SS ☑ FLS ☑ ACS ☑
DATE: 05/12/2023

pjhm architects

LICENSED ARCHITECT
RICHARD W. PRIEBE
NO. C15585
REN. 02/25
STATE OF CALIFORNIA

HIGHLAND HIGH SCHOOL
50M POOL & AQUATICS CENTER

KERN HIGH SCHOOL DISTRICT

SLAB PLAN - COMPOSITE

A-2.0

OC Office: 24461 Ridge Route Drive #100, Laguna Hills, CA 92653 • OC Phone: 949.496.6191 • SD Office: 804 Pier View Way #103, Oceanside, CA 92054 • SD Phone: 760.730.5527 • LA Office: 837 Traction Avenue, #410, Los Angeles, CA 90013 • LA Phone: 213.278.0172 • Web: pjhm.com

4/13/2023 9:04:36 AM

BUILDING A

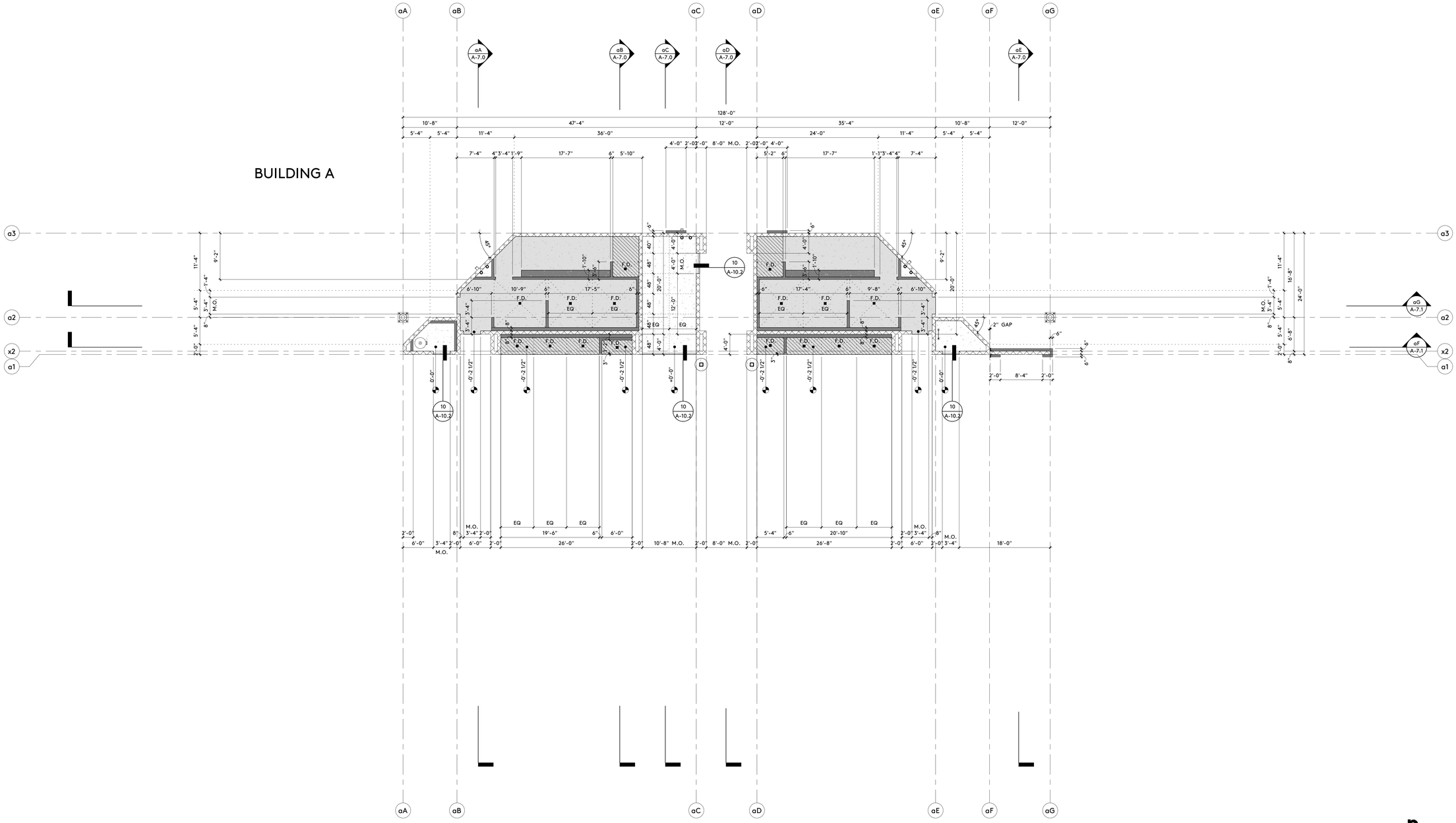

SLAB PLAN

1/8" = 1'-0"

SYMBOLS

- CONCRETE SLAB ON GRADE — CONTROL JOINT PER STRUCTURAL DETAIL (15 / S-1.1)
- CONCRETE SLAB DEPRESSION, DEPTH AS INDICATED
- CONCRETE CURB, 6" A.F.F., UNLESS NOTED OTHERWISE
- CAST-IN PLACE CONCRETE WALL ASSEMBLY
- 8" CONCRETE MASONRY UNIT WALL ASSEMBLY
- AREA OF WATERPROOF MEMBRANE BELOW CERAMIC FLOOR TILE, SEE (2 / A-2.4)

  NOTE!
  ALL WALLS ENCLOSING THIS AREA SHALL RECEIVE WATERPROOF MEMBRANE, FULL HEIGHT OF WALL, SEE TILING SPECIFICATION
- F.D. — FLOOR DRAIN
- F.S. — FLOOR SINK

- (1 / A-1.1) — DETAIL REFERENCE NUMBER / SHEET REFERENCE NUMBER
- (A) — BUILDING GRIDLINE
- 6'-0" — BUILDING DIMENSION
- (1 / A-1.1) SIM. — BUILDING SECTION REFERENCE NUMBER / SHEET REFERENCE NUMBER / SIMILAR SECTION
- +14"-0" — ELEVATION ABOVE FINISH FLOOR +0'-0" / ELEVATION BELOW FINISH FLOOR -0'-0"

4/13/2023 9:04:38 AM

IDENTIFICATION STAMP
DIV. OF THE STATE ARCHITECT
APP: 03-122664 INC:
REVIEWED FOR
SS ☑ FLS ☑ ACS ☑
DATE: 05/12/2023

pjhm architects

LICENSED ARCHITECT
RICHARD W. PRIEBE
NO. C15585
REN. 02/25
STATE OF CALIFORNIA

OC Office: 24461 Ridge Route Drive #100, Laguna Hills, CA 92653 • OC Phone: 949.496.6191 • SD Office: 804 Pier View Way #103, Oceanside, CA 92054 • SD Phone: 760.730.5527 • LA Office: 837 Traction Avenue, #410, Los Angeles, CA 90013 • LA Phone: 213.278.0172 • Web: pjhm.com

HIGHLAND HIGH SCHOOL
50M POOL & AQUATICS CENTER

KERN HIGH SCHOOL DISTRICT

SLAB PLAN

A-2.1

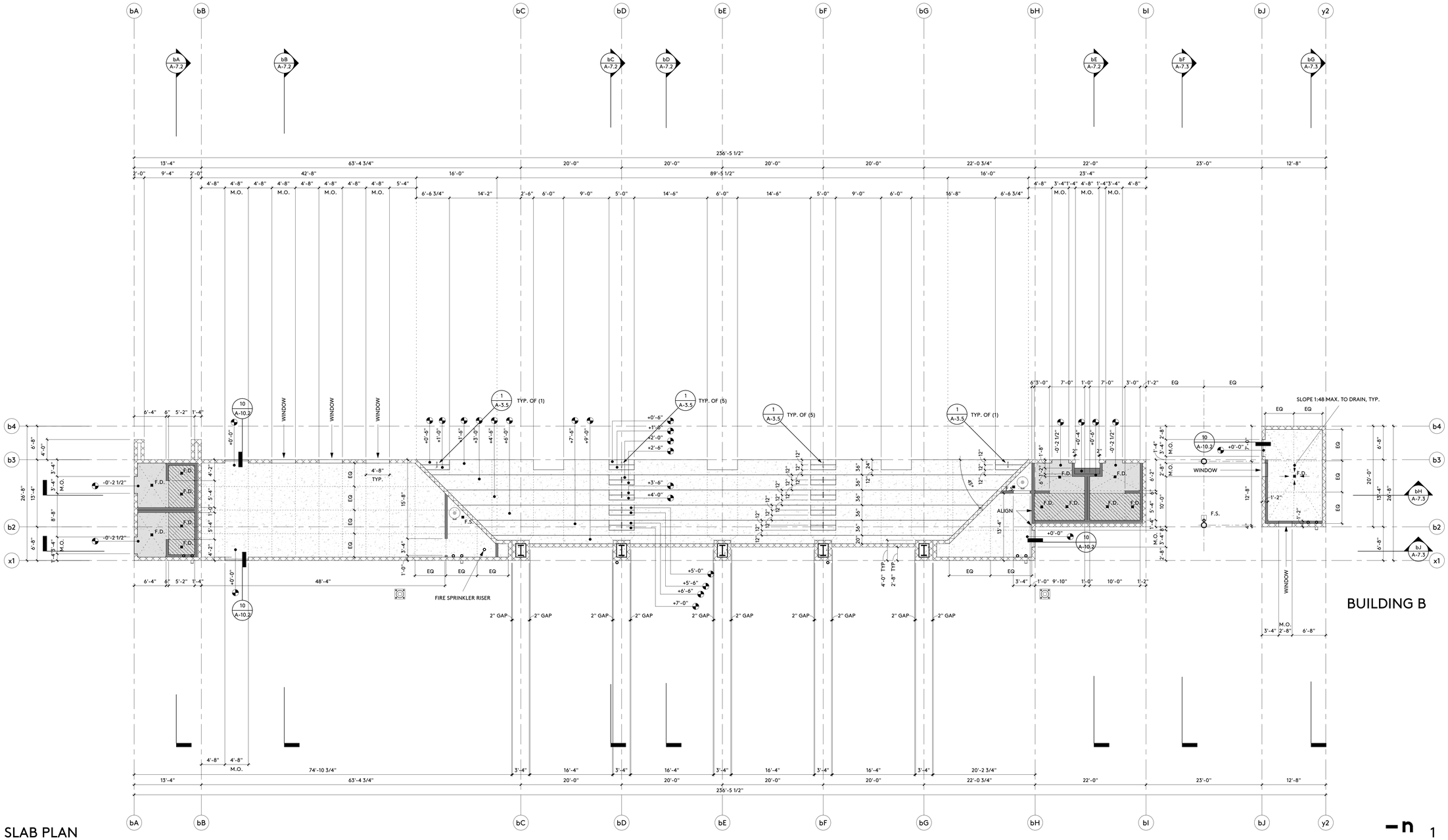

SLAB PLAN

1/8" = 1'-0"

CONCRETE SLAB ON GRADE
CONTROL JOINT PER STRUCTURAL DETAIL 15 S-1.1

CONCRETE SLAB DEPRESSION, DEPTH AS INDICATED

CONCRETE CURB, 6" A.F.F., UNLESS NOTED OTHERWISE

CAST-IN PLACE CONCRETE WALL ASSEMBLY

8" CONCRETE MASONRY UNIT WALL ASSEMBLY

AREA OF WATERPROOF MEMBRANE
BELOW CERAMIC FLOOR TILE, SEE 2 A-2.4

NOTE!
ALL WALLS ENCLOSING THIS AREA SHALL
RECEIVE WATERPROOF MEMBRANE, FULL
HEIGHT OF WALL, SEE TILING SPECIFICATION

F.D. FLOOR DRAIN

F.S. FLOOR SINK

1 A-1.1 DETAIL REFERENCE NUMBER
SHEET REFERENCE NUMBER

A BUILDING GRIDLINE

6'-0" BUILDING DIMENSION

1 A-1.1 SIM BUILDING SECTION REFERENCE NUMBER
SHEET REFERENCE NUMBER
SIMILAR SECTION

+14'-0" ELEVATION ABOVE FINISH FLOOR +0'-0"
ELEVATION BELOW FINISH FLOOR -0'-0"

SYMBOLS

IDENTIFICATION STAMP
DIV. OF THE STATE ARCHITECT
APP: 03-122664 INC:
REVIEWED FOR
SS ☑ FLS ☑ ACS ☑
DATE: 05/12/2023

pjhm architects

LICENSED ARCHITECT
THOMAS W. KRUSE
NO. C15585
REN. 02/25
STATE OF CALIFORNIA

HIGHLAND HIGH SCHOOL
50M POOL & AQUATICS CENTER

KERN HIGH SCHOOL DISTRICT

SLAB PLAN

A-2.2

OC Office: 24461 Ridge Route Drive #100, Laguna Hills, CA 92653 • OC Phone: 949.496.6191 • SD Office: 804 Pier View Way #103, Oceanside, CA 92054 • SD Phone: 760.730.5527 • LA Office: 837 Traction Avenue, #410, Los Angeles, CA 90013 • LA Phone: 213.278.0172 • Web: pjhm.com

4/13/2023 9:04:39 AM

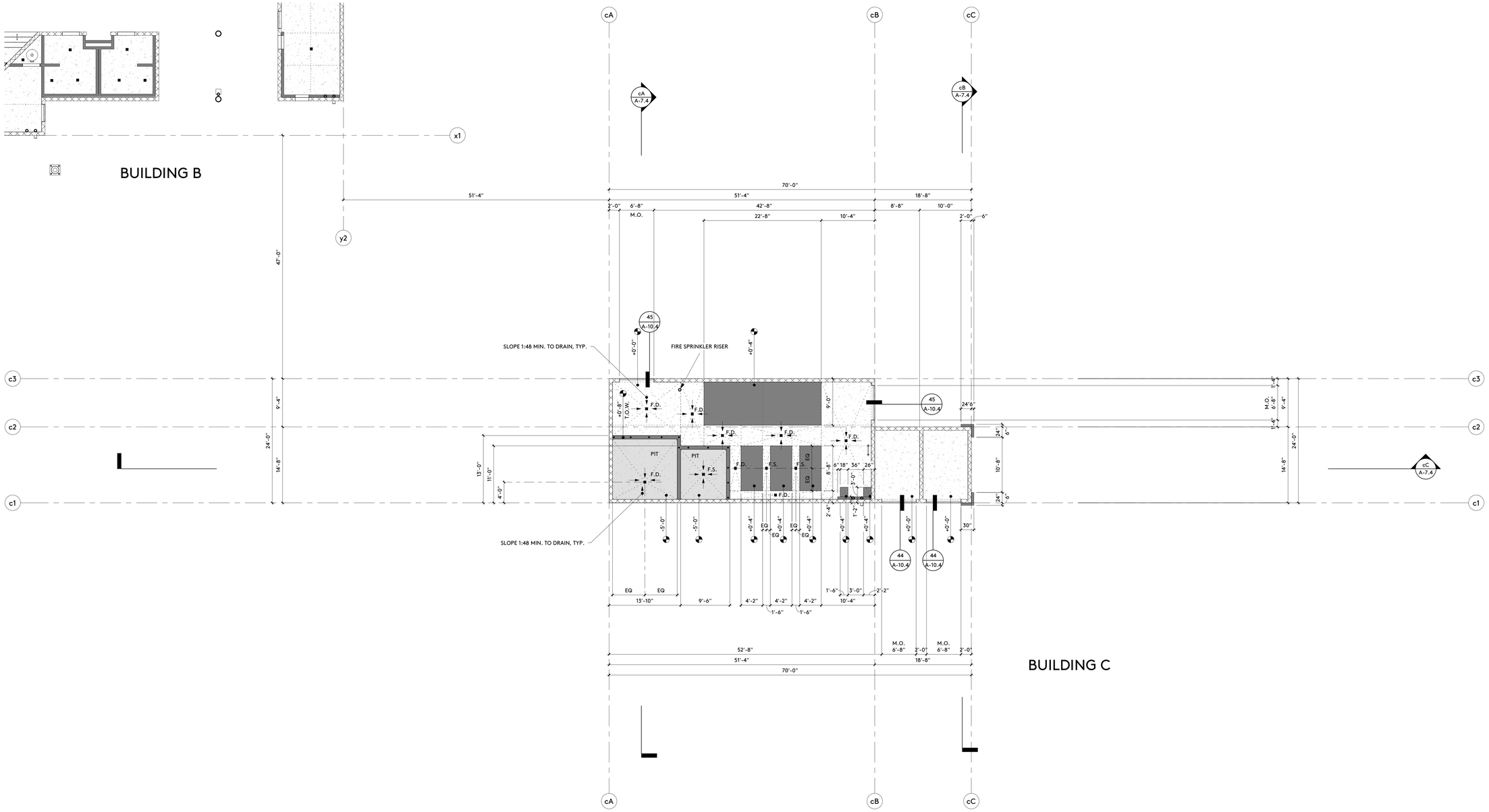

SLAB PLAN

1
1/8" = 1'-0"

CONCRETE SLAB ON GRADE
CONTROL JOINT PER STRUCTURAL DETAIL (15 / S-1.1)

CONCRETE SLAB DEPRESSION, DEPTH AS INDICATED

CONCRETE CURB, 6" A.F.F., UNLESS NOTED OTHERWISE

CAST-IN PLACE CONCRETE WALL ASSEMBLY

8" CONCRETE MASONRY UNIT WALL ASSEMBLY

AREA OF WATERPROOF MEMBRANE
BELOW CERAMIC FLOOR TILE, SEE (2 / A-2.4)

NOTE!
ALL WALLS ENCLOSING THIS AREA SHALL
RECEIVE WATERPROOF MEMBRANE, FULL
HEIGHT OF WALL, SEE TILING SPECIFICATION

F.D. FLOOR DRAIN

F.S. FLOOR SINK

(1 / A-1.1) DETAIL REFERENCE NUMBER
SHEET REFERENCE NUMBER

(A) BUILDING GRIDLINE

6'-0" BUILDING DIMENSION

(1 / A-1.1) BUILDING SECTION REFERENCE NUMBER
SHEET REFERENCE NUMBER
SIM SIMILAR SECTION

+14'-0" ELEVATION ABOVE FINISH FLOOR +0'-0"
ELEVATION BELOW FINISH FLOOR -0'-0"

SYMBOLS

IDENTIFICATION STAMP
DIV. OF THE STATE ARCHITECT
APP: 03-122664 INC:
REVIEWED FOR
SS ☑ FLS ☑ ACS ☑
DATE: 05/12/2023

pjhm architects

LICENSED ARCHITECT
THOMAS W. KRUSE
NO. C15585
REN. 02/25
STATE OF CALIFORNIA

HIGHLAND HIGH SCHOOL
50M POOL & AQUATICS CENTER

KERN HIGH SCHOOL DISTRICT

SLAB PLAN

A-2.3

OC Office: 24461 Ridge Route Drive #100, Laguna Hills, CA 92653 • OC Phone: 949.496.6191 • SD Office: 804 Pier View Way #103, Oceanside, CA 92054 • SD Phone: 760.730.5527 • LA Office: 837 Traction Avenue, #410, Los Angeles, CA 90013 • LA Phone: 213.278.0172 • Web: pjhm.com

4/13/2023 9:04:40 AM

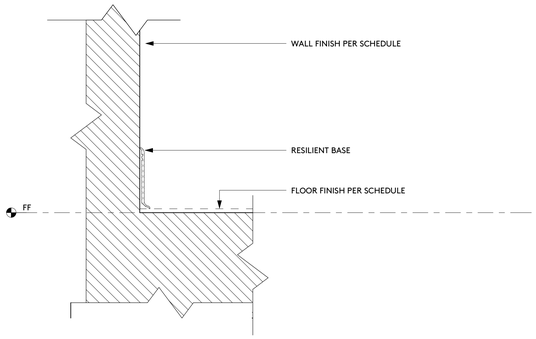

TRANSITION 13

3" = 1'-0"

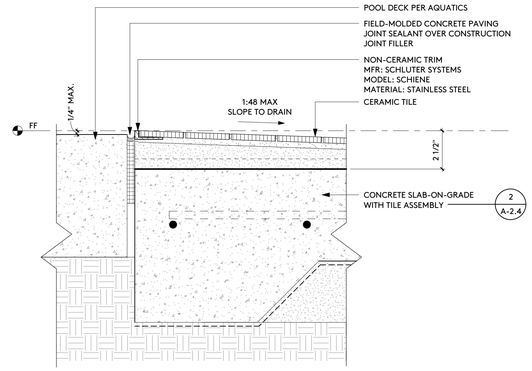

TRANSITION 9

3" = 1'-0"

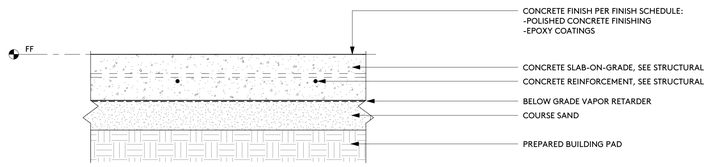

ASSEMBLY - CONCRETE SLAB-ON-GRADE 1

1 1/2" = 1'-0"

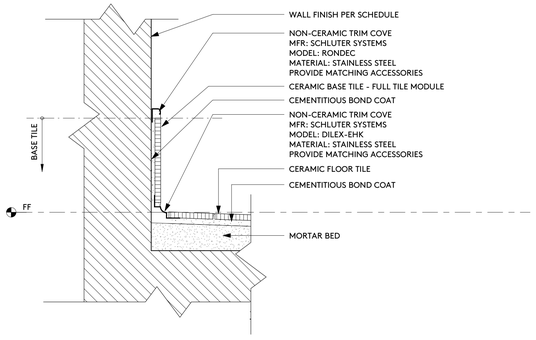

TRANSITION 14

3" = 1'-0"

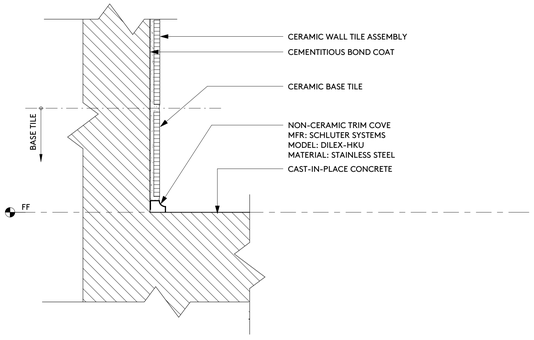

TRANSITION 10

3" = 1'-0"

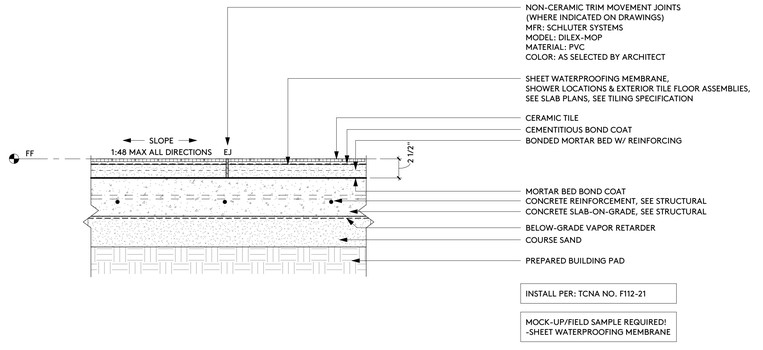

ASSEMBLY - TILE 2

1 1/2" = 1'-0"

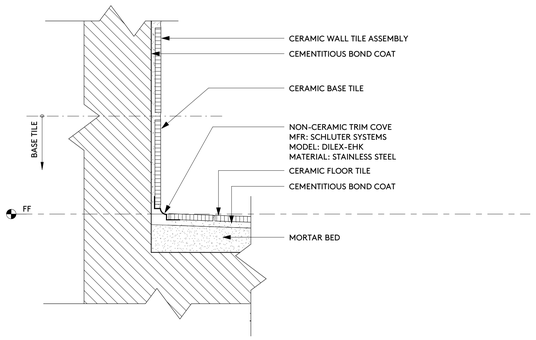

TRANSITION 15

3" = 1'-0"

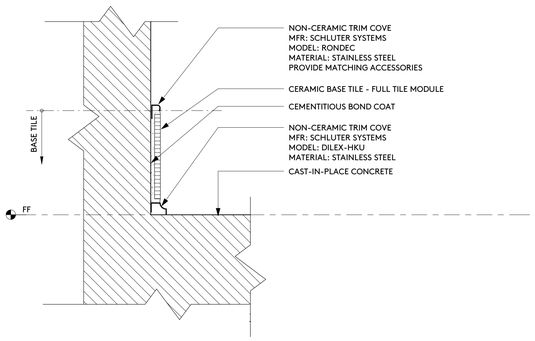

TRANSITION 11

3" = 1'-0"

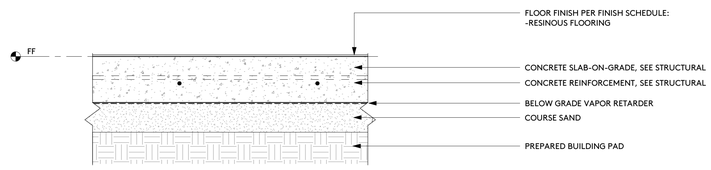

ASSEMBLY - CONCRETE SLAB-ON-GRADE 3

1 1/2" = 1'-0"

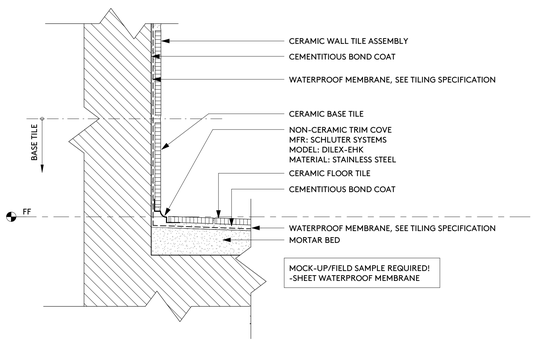

TRANSITION 16

3" = 1'-0"

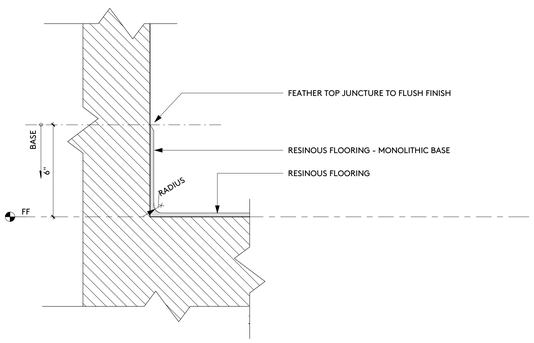

TRANSITION 12

3" = 1'-0"

IDENTIFICATION STAMP
DIV. OF THE STATE ARCHITECT
APP: 03-122664 INC:
REVIEWED FOR
SS ☑ FLS ☑ ACS ☑
DATE: 05/12/2023

pjhm architects

LICENSED ARCHITECT
RICHARD W. PRIEST
NO. C15585
REN. 02/25
STATE OF CALIFORNIA

LA Office: 837 Traction Avenue, #410, Los Angeles, CA 90013 • LA Phone: 213.278.0172 • Web: pjhm.com
SD Phone: 760.730.5527 • OC Office: 24461 Ridge Route Drive #100, Laguna Hills, CA 92653 • OC Phone: 949.496.6191 • SD Office: 804 Pier View Way #103, Oceanside, CA 92054

HIGHLAND HIGH SCHOOL
50M POOL & AQUATICS CENTER

KERN HIGH SCHOOL DISTRICT

SLAB PLAN DETAILS

A-2.4

4/13/2023 9:04:41 AM

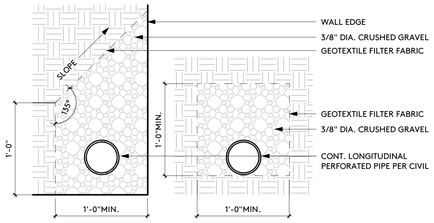

SUB-GRADE DRAIN 13

1 1/2" = 1'-0"

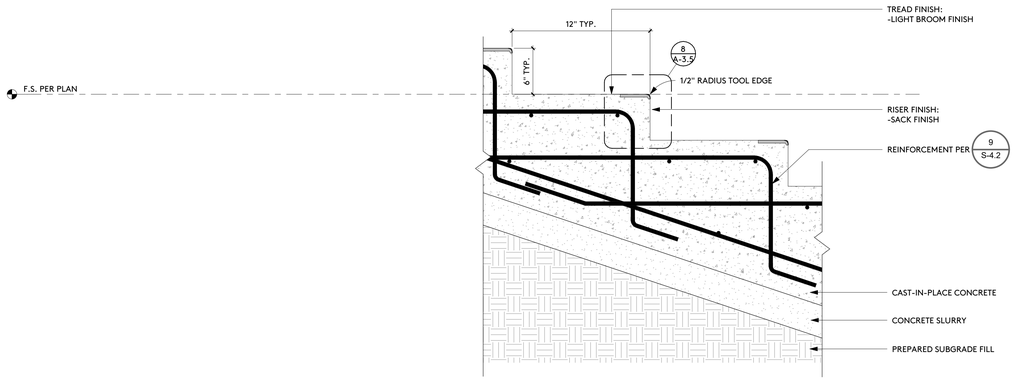

ASSEMBLY - CAST-IN-PLACE CONCRETE STAIRS 1

1 1/2" = 1'-0"

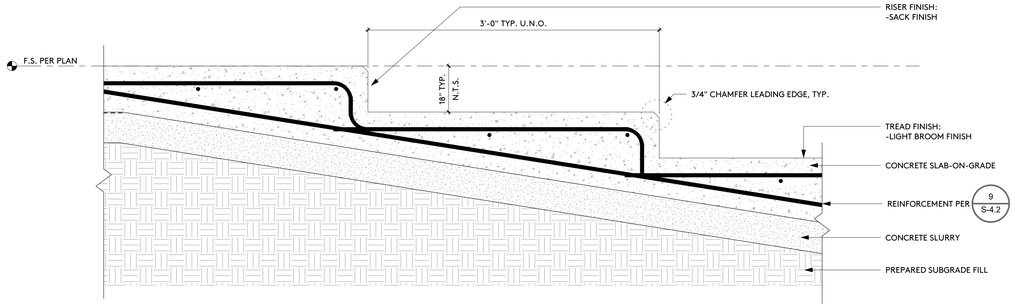

ASSEMBLY - CAST-IN-PLACE CONCRETE TIERED SEATING 2

1 1/2" = 1'-0"

IDENTIFICATION STAMP
DIV. OF THE STATE ARCHITECT
APP: 03-122664 INC:
REVIEWED FOR
SS ☑ FLS ☑ ACS ☑
DATE: 05/12/2023

pjhm architects

LICENSED ARCHITECT
RICHARD W. RIDDELL
NO. C15585
REN. 02/25
STATE OF CALIFORNIA

OC Office: 24461 Ridge Route Drive #100, Laguna Hills, CA 92653 • OC Phone: 949.496.6191 • SD Office: 804 Pier View Way #103, Oceanside, CA 92054 • SD Phone: 760.730.5527 • LA Office: 837 Traction Avenue, #410, Los Angeles, CA 90013 • LA Phone: 213.278.0172 • Web: pjhm.com

HIGHLAND HIGH SCHOOL
50M POOL & AQUATICS CENTER

KERN HIGH SCHOOL DISTRICT

SLAB PLAN DETAILS

A-2.5

4/13/2023 9:04:41 AM

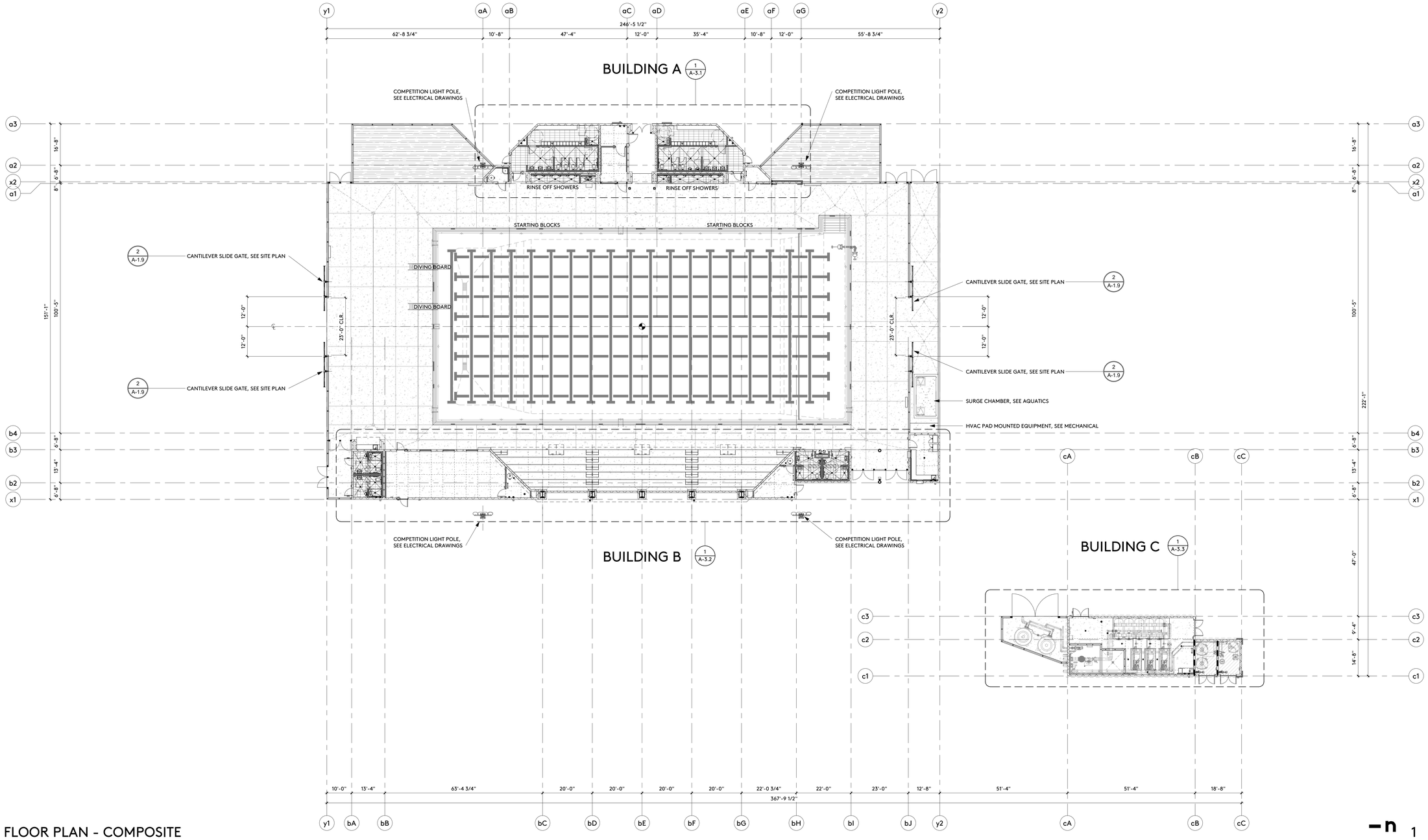

FLOOR PLAN - COMPOSITE

1/16" = 1'-0"

POOL WATER SURFACE AREA = 12,369 SQ. FT.

12,369 SQ. FT. DIVIDED BY 15 = 825

825 DIVIDED BY 2 = 412

412 MEN AND 412 FEMALES

REQUIRED MEN'S TOILETS = 6
REQUIRED MEN'S URINALS = 6
REQUIRED MEN'S LAVATORIES = 5
REQUIRED MEN'S SHOWERS = 8

REQUIRED WOMEN'S TOILETS = 7
REQUIRED WOMEN'S LAVATORIES = 5
REQUIRED WOMEN'S SHOWERS = 9

REQUIRED DRINKING FOUNTAINS = 4 TOTAL

PROVIDED MEN'S TOILETS = 6
PROVIDED MEN'S URINALS = 6
PROVIDED MEN'S LAVATORIES = 5
PROVIDED MEN'S SHOWERS = 8

PROVIDED WOMEN'S TOILETS = 7
PROVIDED WOMEN'S LAVATORIES = 5
PROVIDED WOMEN'S SHOWERS = 9

PROVIDED DRINKING FOUNTAINS = 4 TOTAL

PLUMBING FIXTURE COUNT

ASSISTIVE LISTENING SYSTEM RECEIVERS REQUIRED (CBC SECTION 11B-219.3)			
ASSEMBLY AREA	OCCUPANTS	PERSONAL RECEIVERS REQUIRED	RECEIVERS REQUIRED TO BE HEARING AID COMPATIBLE
POOL & POOL DECK	1183	48	12
TIERED SEATING	356	15	4
CLASSROOM	44	2	2

ASSISTIVE LISTENING SYSTEM

IDENTIFICATION STAMP
DIV. OF THE STATE ARCHITECT
APP: 03-122664 INC:
REVIEWED FOR
SS ☑ FLS ☑ ACS ☑
DATE: 05/12/2023

pjhm architects

LICENSED ARCHITECT
THOMAS W. KRUSE
NO. C15585
REN. 02/25
STATE OF CALIFORNIA

HIGHLAND HIGH SCHOOL
50M POOL & AQUATICS CENTER

KERN HIGH SCHOOL DISTRICT

FLOOR PLAN - COMPOSITE

A-3.0

OC Office: 24461 Ridge Route Drive #100, Laguna Hills, CA 92653 • OC Phone: 949.496.6191 • SD Office: 804 Pier View Way #103, Oceanside, CA 92054 • SD Phone: 760.730.5527 • LA Office: 837 Traction Avenue, #410, Los Angeles, CA 90013 • LA Phone: 213.278.0172 • Web: pjhm.com

4/13/2023 9:04:44 AM

GIRLS LOCKER ROOM
(12)TWO-TIER METAL LOCKERS
(2) ONE-TIER METAL LOCKERS (ADA)
TOTAL PROVIDED: 26
5% (26): 1.3
ACCESSIBLE LOCKERS PROVIDED: 2

BOYS LOCKER ROOM
(12)TWO-TIER METAL LOCKERS
(2) ONE-TIER METAL LOCKERS (ADA)
TOTAL PROVIDED: 26
5% (26): 1.3
ACCESSIBLE LOCKERS PROVIDED: 2

BUILDING A

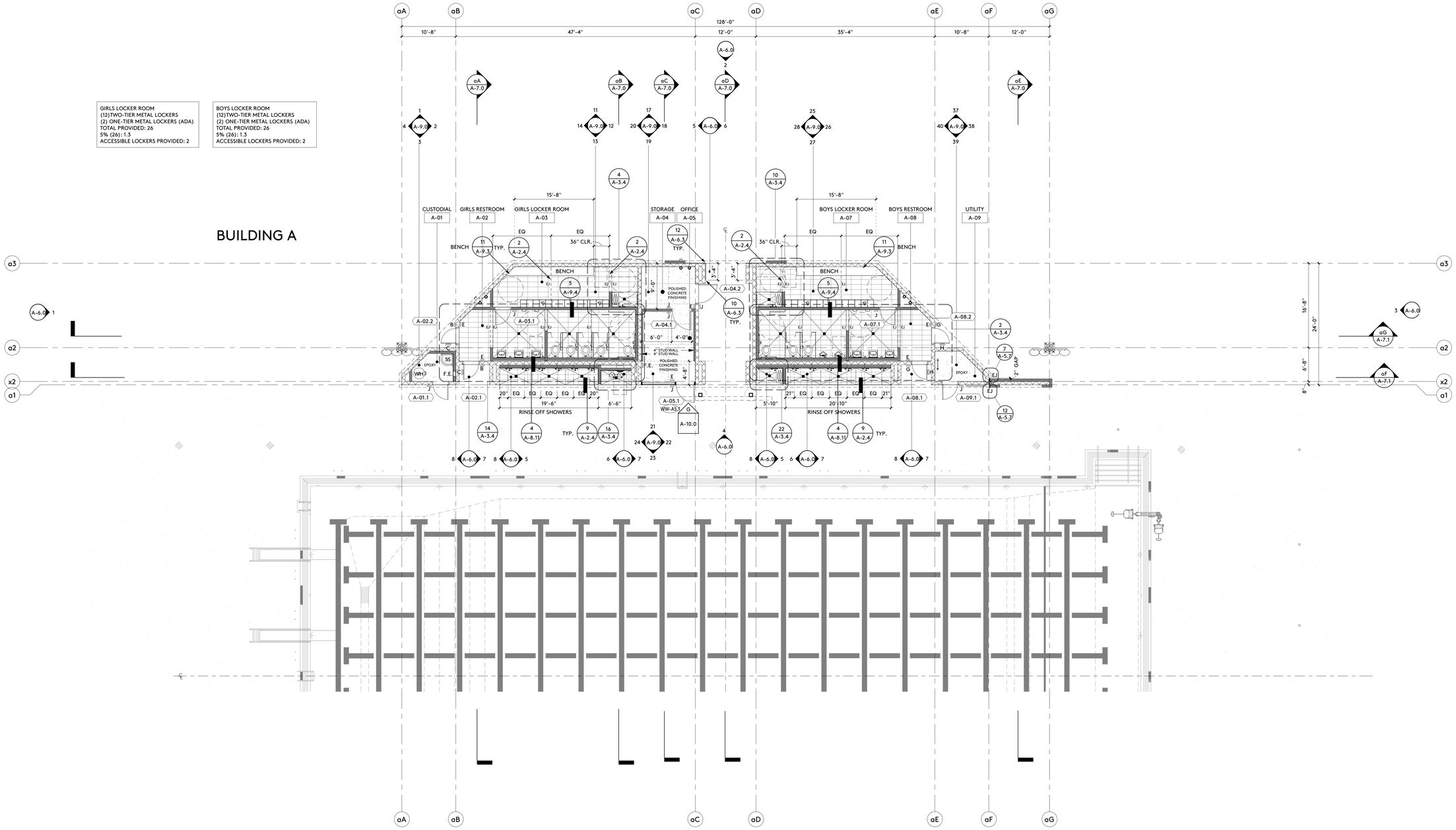

FLOOR PLAN - BUILDING A

1/8" = 1'-0"

SYMBOLS

- WOOD STUD WALL ASSEMBLY — MIN. 2x6, UNLESS NOTED OTHERWISE
- CAST-IN PLACE CONCRETE WALL ASSEMBLY
- 8" CONCRETE MASONRY UNIT WALL ASSEMBLY
- 8" CONCRETE MASONRY UNIT WALL ASSEMBLY, 1 HOUR FIRE RATED PER C.B.C. TABLE 722.3.2 CALCULATED FIRE RESISTANCE
- TOILET COMPARTMENTS
- 24" MIN. AT EXTERIOR DOOR; 18" MIN. AT INTERIOR DOOR
- ACCESSIBLE DOOR CLEAR SPACE
- 12" MIN. IF DOOR HAS LATCH & CLOSER
- CERAMIC TILING — 2 / A-2.4
- EPOXY — EPOXY COATING OVER CONCRETE FLOORING — 1 / A-2.4
- POLISHED — POLISHED CONCRETE FINISHING — 1 / A-2.4
- RESINOUS — RESINOUS FLOORING — 3 / A-2.4

- 10' - 0" F.O.F. — CENTERLINE, WHERE OCCURS; BUILDING DIMENSION, FACE OF SHEATHING WHERE OCCURS, OTHERWISE FACE OF STUD; FACE OF FINISH, WHERE OCCURS
- 10 — BUILDING GRIDLINE
- SIM. 1 / A-14.2 — SIMILAR SECTION; SECTION NUMBER; BUILDING SECTION; SHEET NUMBER
- 1 / A-9.0 / 1 — ELEVATION NUMBER; INTERIOR ELEVATION; SHEET NUMBER
- 1 / 1 A-9.20 1 / 1 — ELEVATION NUMBER; WINDOW WALL ELEVATION; SHEET NUMBER

- SIM. 1 / A-14.2 — SIMILAR REFERENCE; REFERENCE NUMBER; DETAIL REFERENCE; SHEET NUMBER
- PLUMBING FIXTURES
- DRINKING FOUNTAIN — 6 / A-9.3
- BOTTLE FILLING STATION — 8 / A-9.3
- F.E. — FIRE EXTINGUISHER; UL RATING: 4A-80BC — 1 / A-9.4
- SIM. A — TACTILE SIGNAGE PER LEGEND, THIS SHEET
- ROOM NAME 101 — ROOM TAG; ROOM NUMBER
- A-50.8 — OPENING TAG
- WW-00 — WINDOW WALL TAG
- S C D W — ACCESSIBLE BLEACHER SEATING — 2 / A-3.2

TACTILE SIGNAGE LEGEND

- A WOMEN'S RESTROOM WALL SIGN
- B GIRL'S RESTROOM WALL SIGN
- C FEMALE DOOR GEOMETRIC SYMBOL
- D ROOM DESIGNATION WALL SIGN WITH ISA
- E EXIT
- F MEN'S RESTROOM WALL SIGN
- G BOY'S RESTROOM WALL SIGN
- H MALE DOOR GEOMETRIC SYMBOL
- J ROOM DESIGNATION WALL SIGN
- K EXIT ROUTE
- L SPRINKLER RISER ROOM
- M GENDER NEUTRAL / UNISEX RESTROOM WALL SIGN
- N GENDER NEUTRAL / UNISEX GEOMETRIC DOOR SIGN
- P OCCUPANCY SIGN
- Q ASSISTIVE LISTENING SIGN (25%, BUT NO FEWER THAN TWO, SHALL BE HEARING AID COMPATIBLE)
- R AISLE SEAT AVAILABILITY SIGN — 8 / A-14.0

TACTILE SIGNAGE DETAILS PER SHEET A-12.0
UNLESS NOTED OTHERWISE

IDENTIFICATION STAMP
DIV. OF THE STATE ARCHITECT
APP: 03-122664 INC:
REVIEWED FOR
SS ☑ FLS ☑ ACS ☑
DATE: 05/12/2023

pjhm architects
LICENSED ARCHITECT RICHARD W. PRIMUS NO. C15585 REN. 02/25 STATE OF CALIFORNIA
OC Office: 24461 Ridge Route Drive #100, Laguna Hills, CA 92653 • OC Phone: 949.496.6191 • SD Office: 804 Pier View Way #103, Oceanside, CA 92054 • SD Phone: 760.730.5527 • LA Office: 837 Traction Avenue, #410, Los Angeles, CA 90013 • LA Phone: 213.278.0172 • Web: pjhm.com

HIGHLAND HIGH SCHOOL
50M POOL & AQUATICS CENTER

KERN HIGH SCHOOL DISTRICT

FLOOR PLAN

A-3.1

4/13/2023 9:04:46 AM

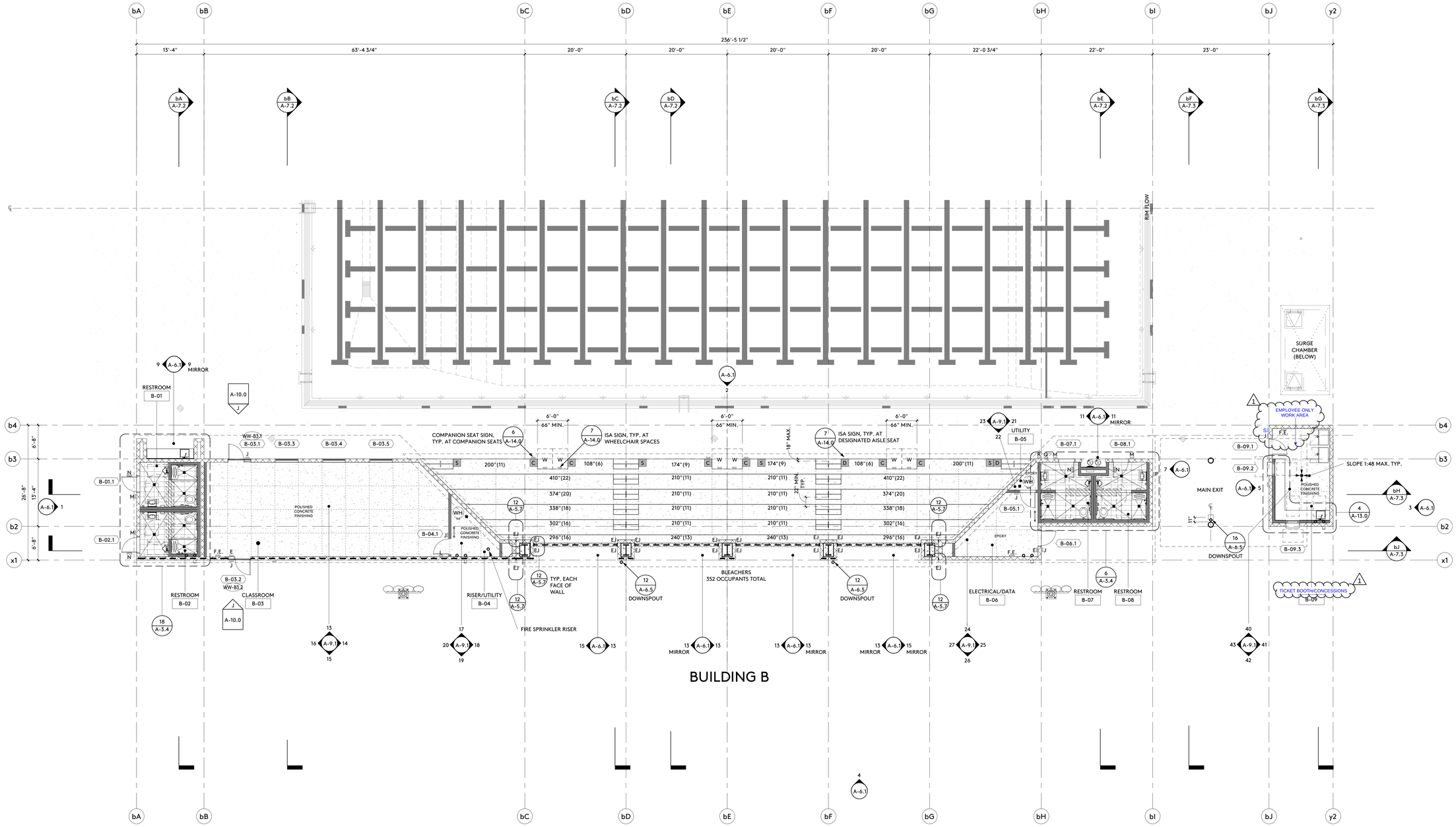

FLOOR PLAN - BUILDING B

1/8" = 1'-0"

SYMBOLS

- WOOD STUD WALL ASSEMBLY — MIN. 2x6, UNLESS NOTED OTHERWISE
- CAST-IN PLACE CONCRETE WALL ASSEMBLY
- 8" CONCRETE MASONRY UNIT WALL ASSEMBLY
- 8" CONCRETE MASONRY UNIT WALL ASSEMBLY, 1 HOUR FIRE RATED PER C.B.C. TABLE 722.3.2 CALCULATED FIRE RESISTANCE
- TOILET COMPARTMENTS
- 24" MIN. AT EXTERIOR DOOR; 18" MIN. AT INTERIOR DOOR
- ACCESSIBLE DOOR CLEAR SPACE
- 12" MIN. IF DOOR HAS LATCH & CLOSER
- CERAMIC TILING — 2 / A-2.4
- EPOXY — EPOXY COATING OVER CONCRETE FLOORING — 1 / A-2.4
- POLISHED — POLISHED CONCRETE FINISHING — 1 / A-2.4
- RESINOUS — RESINOUS FLOORING — 3 / A-2.4
- 10' - 0" F.O.F. — CENTERLINE, WHERE OCCURS; BUILDING DIMENSION, FACE OF SHEATHING WHERE OCCURS, OTHERWISE FACE OF STUD; FACE OF FINISH, WHERE OCCURS
- 10 — BUILDING GRIDLINE
- SIM. / 1 / A-14.2 — SIMILAR SECTION; SECTION NUMBER; BUILDING SECTION; SHEET NUMBER
- 1 / 1 A-9.0 1 / 1 — ELEVATION NUMBER; INTERIOR ELEVATION; SHEET NUMBER
- 1 / 1 A-9.20 1 / 1 — ELEVATION NUMBER; WINDOW WALL ELEVATION; SHEET NUMBER
- SIM. / 1 / A-14.2 — SIMILAR REFERENCE; REFERENCE NUMBER; DETAIL REFERENCE; SHEET NUMBER
- PLUMBING FIXTURES
- DRINKING FOUNTAIN — 6 / A-9.3
- BOTTLE FILLING STATION — 8 / A-9.3
- F.E. — FIRE EXTINGUISHER UL RATING: 4A-80BC — 1 / A-9.4
- A — TACTILE SIGNAGE PER LEGEND, THIS SHEET
- ROOM NAME / 101 — ROOM TAG; ROOM NUMBER
- A-50.8 — OPENING TAG
- WW-00 — WINDOW WALL TAG
- S C D W — ACCESSIBLE BLEACHER SEATING — 2 / A-3.2

BLEACHER SEATING CAPACITY 2

1/8" = 1'-0"

TIERED SEATING CAPACITY (1.5 LINEAR FEET PER OCCUPANT)	
ROW 1:	58
ROW 2:	66
ROW 3:	62
ROW 4:	58
ROW 5:	54
ROW 6:	58
TOTAL SEATS:	356

ACCESSIBLE SEATING CALCULATION (PER 11B-221 & TABLE 11B-221.2.1.1)

	REQUIRED	PROVIDED
STANDARD SEATS	-	338
WHEELCHAIR SPACES (W)	6	6
COMPANION SEATS (C)	6	6
DESIGNATED AISLE (D)	2	2
SEMI-AMBULANT (S)	4	4
TOTAL NUMBER OF SEATS:		356

TACTILE SIGNAGE LEGEND

- A WOMEN'S RESTROOM WALL SIGN
- B GIRL'S RESTROOM WALL SIGN
- C FEMALE DOOR GEOMETRIC SYMBOL
- D ROOM DESIGNATION WALL SIGN WITH ISA
- E EXIT
- F MEN'S RESTROOM WALL SIGN
- G BOY'S RESTROOM WALL SIGN
- H MALE DOOR GEOMETRIC SYMBOL
- J ROOM DESIGNATION WALL SIGN
- K EXIT ROUTE
- L SPRINKLER RISER ROOM
- M GENDER NEUTRAL / UNISEX RESTROOM WALL SIGN
- N GENDER NEUTRAL / UNISEX GEOMETRIC DOOR SIGN
- P OCCUPANCY SIGN
- Q ASSISTIVE LISTENING SIGN (25%, BUT NO FEWER THAN TWO, SHALL BE HEARING AID COMPATIBLE)
- R AISLE SEAT AVAILABILITY SIGN — 8 / A-14.0
- S EMPLOYEES ONLY SIGN — 4 / A-14.0 — 1

TACTILE SIGNAGE DETAILS PER — SHEET A-12.0

IDENTIFICATION STAMP
DIV. OF THE STATE ARCHITECT
APP: 03-122664 INC:
REVIEWED FOR
SS ☑ FLS ☑ ACS ☑
DATE: 05/12/2023

pjhm architects

LICENSED ARCHITECT
RICHARD W. PRIEST
NO. C15585
REN. 02/25
STATE OF CALIFORNIA

HIGHLAND HIGH SCHOOL
50M POOL & AQUATICS CENTER

KERN HIGH SCHOOL DISTRICT

1 ADDENDUM NO. 1

FLOOR PLAN

A-3.2

OC Office: 24461 Ridge Route Drive #100, Laguna Hills, CA 92653 • SD Phone: 760.730.5527 • LA Office: 837 Traction Avenue, #410, Los Angeles, CA 90013 • LA Phone: 213.278.0172 • Web: pjhm.com
SD Office: 804 Pier View Way #103, Oceanside, CA 92054 • OC Phone: 949.496.6191

4/13/2023 11:26:56 AM

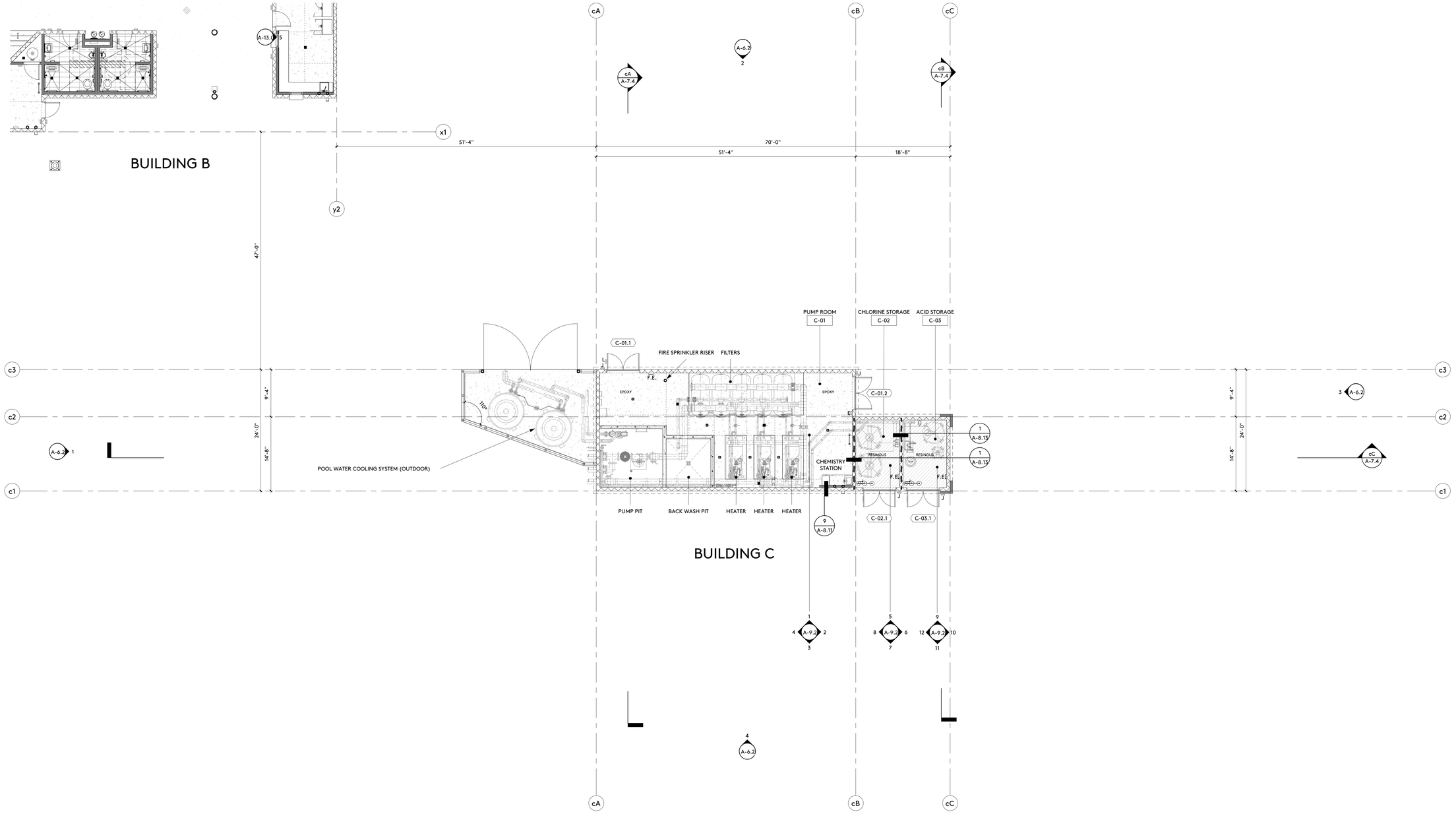

FLOOR PLAN - BUILDING C

1
1/8" = 1'-0"

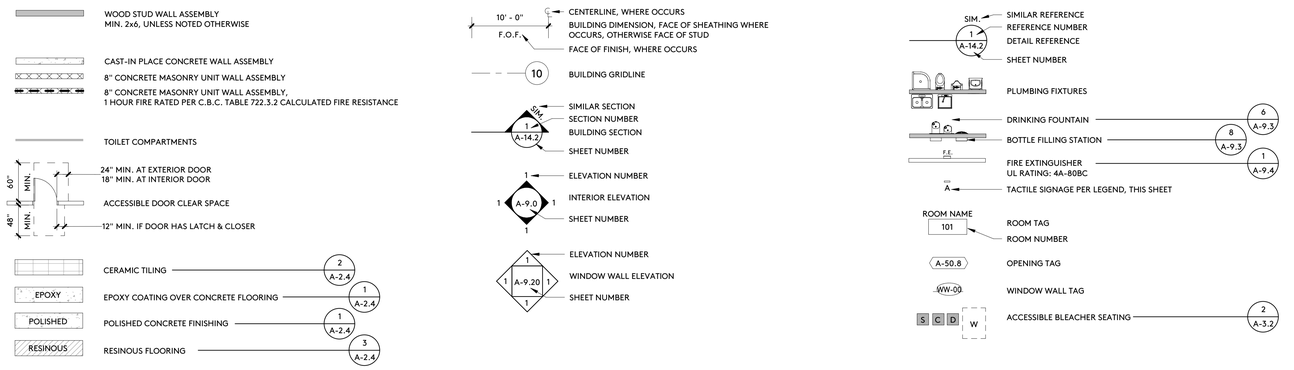

SYMBOLS

A WOMEN'S RESTROOM WALL SIGN
B GIRL'S RESTROOM WALL SIGN
C FEMALE DOOR GEOMETRIC SYMBOL
D ROOM DESIGNATION WALL SIGN WITH ISA
E EXIT
F MEN'S RESTROOM WALL SIGN
G BOY'S RESTROOM WALL SIGN
H MALE DOOR GEOMETRIC SYMBOL
J ROOM DESIGNATION WALL SIGN
K EXIT ROUTE
L SPRINKLER RISER ROOM
M GENDER NEUTRAL / UNISEX RESTROOM WALL SIGN
N GENDER NEUTRAL / UNISEX GEOMETRIC DOOR SIGN
P OCCUPANCY SIGN
Q ASSISTIVE LISTENING SIGN (25%, BUT NO FEWER THAN TWO, SHALL BE HEARING AID COMPATIBLE)
R AISLE SEAT AVAILABILITY SIGN

TACTILE SIGNAGE DETAILS PER SHEET A-12.0

TACTILE SIGNAGE LEGEND

IDENTIFICATION STAMP
DIV. OF THE STATE ARCHITECT
APP: 03-122664 INC:
REVIEWED FOR
SS ☑ FLS ☑ ACS ☑
DATE: 05/12/2023

pjhm architects

LICENSED ARCHITECT
THOMAS W. KRUSE
NO. C15585
REN. 02/25
STATE OF CALIFORNIA

HIGHLAND HIGH SCHOOL
50M POOL & AQUATICS CENTER

KERN HIGH SCHOOL DISTRICT

FLOOR PLAN

A-3.3

OC Office: 24461 Ridge Route Drive #100, Laguna Hills, CA 92653 • OC Phone: 949.496.6191 • SD Office: 804 Pier View Way #103, Oceanside, CA 92054 • SD Phone: 760.730.5527 • LA Office: 837 Traction Avenue, #410, Los Angeles, CA 90013 • LA Phone: 213.278.0172 • Web: pjhm.com

4/13/2023 9:04:49 AM

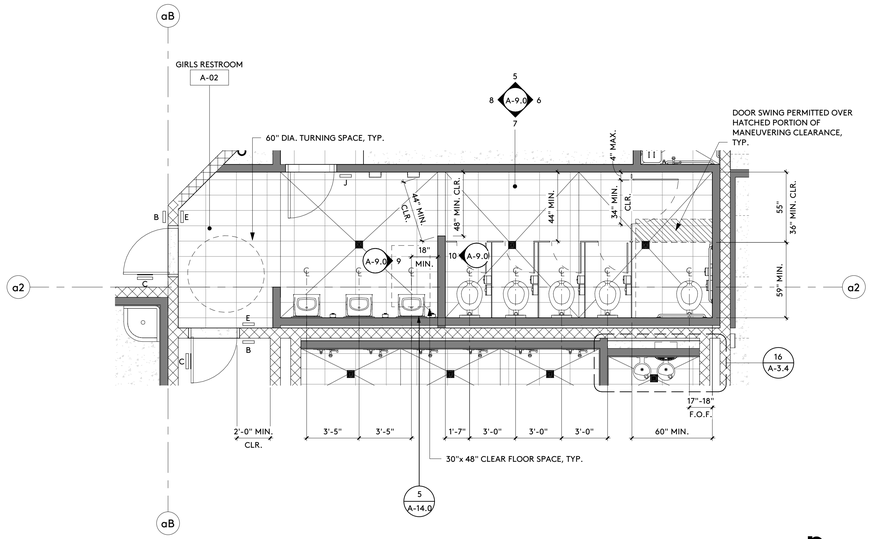

ENLARGED FLOOR PLAN — n 14

1/4" = 1'-0"

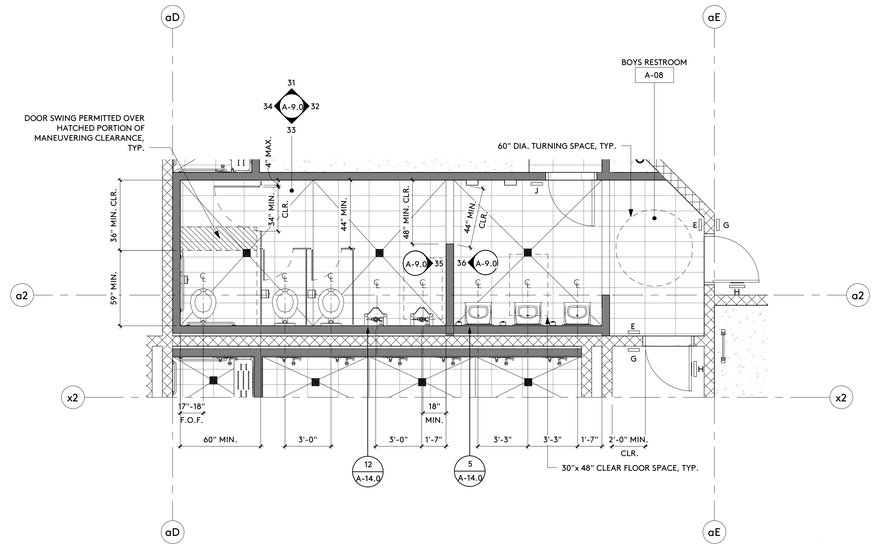

ENLARGED FLOOR PLAN — n 2

1/4" = 1'-0"

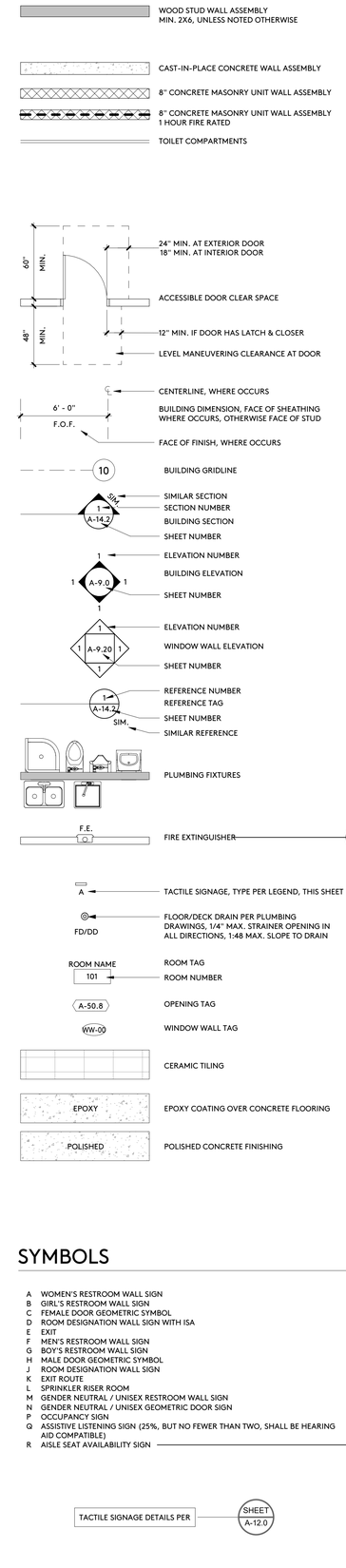

ENLARGED FLOOR PLAN — n 22

1/4" = 1'-0"

ENLARGED FLOOR PLAN — n 16

1/4" = 1'-0"

ENLARGED FLOOR PLAN — n 10

1/4" = 1'-0"

ENLARGED FLOOR PLAN — n 4

1/4" = 1'-0"

ENLARGED FLOOR PLAN — n 18

1/4" = 1'-0"

ENLARGED FLOOR PLAN — n 6

1/4" = 1'-0"

SYMBOLS

A WOMEN'S RESTROOM WALL SIGN
B GIRL'S RESTROOM WALL SIGN
C FEMALE DOOR GEOMETRIC SYMBOL
D ROOM DESIGNATION WALL SIGN WITH ISA
E EXIT
F MEN'S RESTROOM WALL SIGN
G BOY'S RESTROOM WALL SIGN
H MALE DOOR GEOMETRIC SYMBOL
J ROOM DESIGNATION WALL SIGN
K EXIT ROUTE
L SPRINKLER RISER ROOM
M GENDER NEUTRAL / UNISEX RESTROOM WALL SIGN
N GENDER NEUTRAL / UNISEX GEOMETRIC DOOR SIGN
P OCCUPANCY SIGN
Q ASSISTIVE LISTENING SIGN (25%, BUT NO FEWER THAN TWO, SHALL BE HEARING AID COMPATIBLE)
R AISLE SEAT AVAILABILITY SIGN — 8 / A-14.0

TACTILE SIGNAGE DETAILS PER — SHEET A-12.0

TACTILE SIGNAGE LEGEND

IDENTIFICATION STAMP
DIV. OF THE STATE ARCHITECT
APP: 03-122664 INC:
REVIEWED FOR
SS ☑ FLS ☑ ACS ☑
DATE: 05/12/2023

pjhm architects
LICENSED ARCHITECT
RICHARD W. PRIMUS
NO. C15585
REN. 02/25
STATE OF CALIFORNIA

OC Office: 24461 Ridge Route Drive #100, Laguna Hills, CA 92653 • OC Phone: 949.496.6191 • SD Office: 804 Pier View Way #103, Oceanside, CA 92054 • SD Phone: 760.730.5527 • LA Office: 837 Traction Avenue, #410, Los Angeles, CA 90013 • LA Phone: 213.278.0172 • Web: pjhm.com

HIGHLAND HIGH SCHOOL
50M POOL & AQUATICS CENTER

KERN HIGH SCHOOL DISTRICT

FLOOR PLAN - ENLARGED

A-3.4

4/13/2023 9:04:52 AM

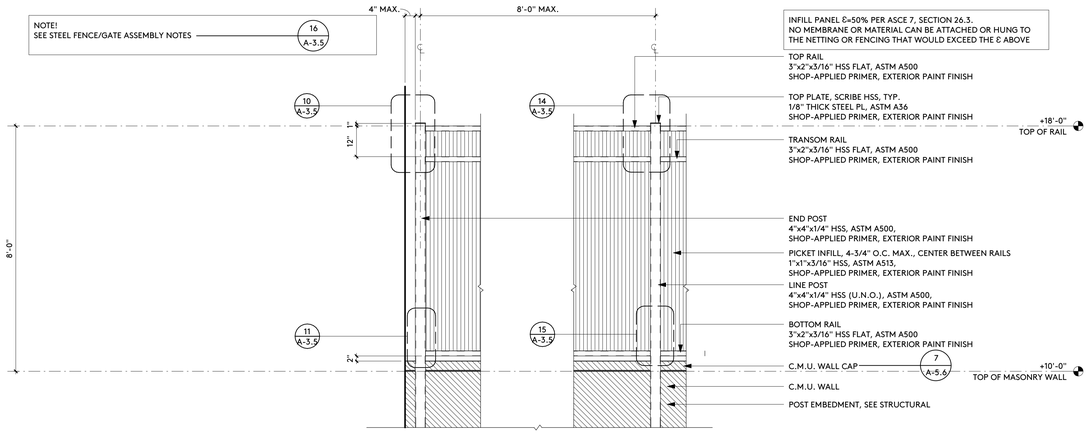

BUILDING FENCE - ORNAMENTAL STEEL 9

1/2" = 1'-0"

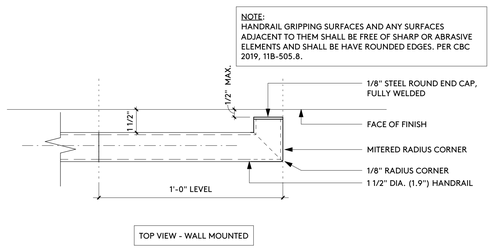

HANDRAIL TERMINATION 5

3" = 1'-0"

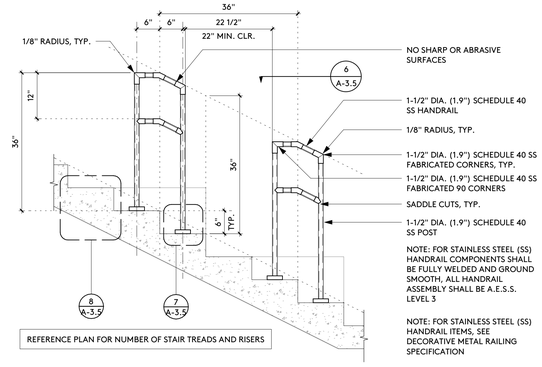

STAIR/HANDRAIL ELEVATION - POST MOUNT 1

3/4" = 1'-0"



DETAIL 14

1 1/2" = 1'-0"

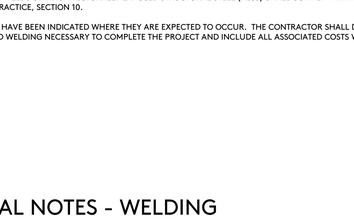

DETAIL 10

1 1/2" = 1'-0"

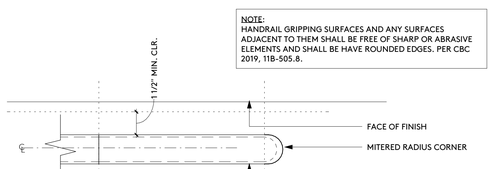

HANDRAIL TERMINATION 6

3" = 1'-0"

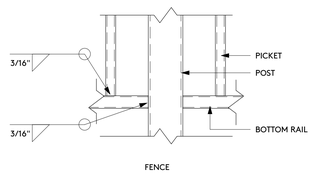

DETAIL 15

1 1/2" = 1'-0"

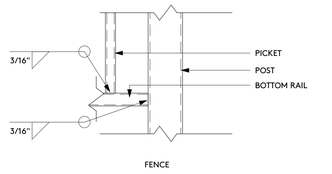

DETAIL 11

1 1/2" = 1'-0"

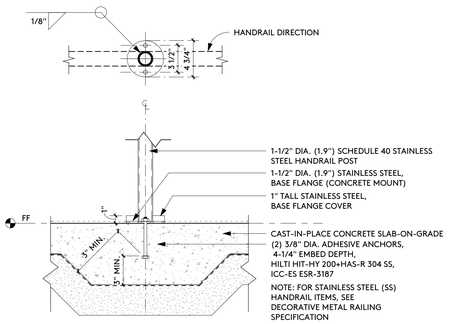

ANCHORAGE - POST MOUNTED HANDRAIL 7

1 1/2" = 1'-0"

1. ALL FENCE FRAMES/COMPONENTS SHALL BE: A.E.S.S. LEVEL 3
2. ALL FENCE FRAME ASSEMBLIES SHALL BE FULLY WELDED, WELDS ALL AROUND WITH FILLET WELDS, SEE WELDING NOTES — 12 A-3.5
3. ALL FENCE FRAME ASSEMBLIES SHALL BE SHOP-PRIMED AND FIELD PAINTED (TOP COATS)
4. PRODUCT DATA AND SHOP DRAWINGS ARE REQUIRED. APPROVED SUBMITTALS ARE REQUIRED PRIOR TO FABRICATION.

NOTE! STEEL FENCE ASSEMBLY 16

1/8" = 1'-0"

1. WELDING PROCEDURES, ELECTRODES AND WELDER QUALIFICATIONS SHALL CONFORM TO THE "CODE FOR WELDING IN BUILDING CONSTRUCTION", AMERICAN WELDING SOCIETY (AWS), D1.1 AND THE AISC "SPECIFICATIONS FOR THE DESIGN, FABRICATION AND ERECTION OF STRUCTURAL STEEL FOR BUILDINGS".
2. ALL WELDERS SHALL HAVE EVIDENCE OF PASSING THE AWS STANDARD QUALIFICATION TESTS, AND SHALL BE CERTIFIED FOR THE WORK THEY ARE PERFORMING.
3. PROJECT WELDING SHALL BE PERFORMED ONLY IN ACCORDANCE WITH WELDING PROCEDURE SPECIFICATIONS (WPS) SUBMITTED BY THE CONTRACTOR AND REVIEWED BY THE EOR AND PROJECT WELDING INSPECTOR. THE WPS SHALL BE IN ACCORDANCE WITH AWS D1.1-D1.4 CURRENT EDITION.
4. WELDING OF STRUCTURAL STEEL SHALL BE PERFORMED PER AWS D1.1 USING E70XX ELECTRODES UNLESS OTHERWISE NOTED.
5. WELDING OF REINFORCING BARS SHALL BE PERFORMED PER AWS D1.4 USING E90XX ELECTRODES.
6. WELDING OF METAL DECK AND LIGHT GAGE STEEL SHALL BE IN ACCORDANCE WITH AWS D1.3.
7. ALL EXPOSED WELDS ON ARCHITECTURALLY EXPOSED STRUCTURAL STEEL (AESS) SHALL COMPLY WITH AISC CODE OF STANDARD PRACTICE, SECTION 10.
8. FIELD WELDS HAVE BEEN INDICATED WHERE THEY ARE EXPECTED TO OCCUR. THE CONTRACTOR SHALL DETERMINE THE ACTUAL FIELD WELDING NECESSARY TO COMPLETE THE PROJECT AND INCLUDE ALL ASSOCIATED COSTS WITHIN THE BASE BID

GENERAL NOTES - WELDING 12

1/8" = 1'-0"

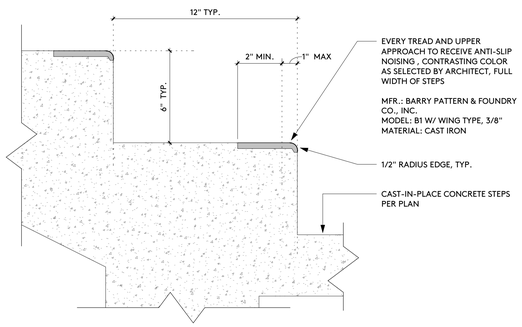

STAIR NOSING 8

3" = 1'-0"

4/13/2023 9:04:53 AM

IDENTIFICATION STAMP
DIV. OF THE STATE ARCHITECT
APP: 03-122664 INC:
REVIEWED FOR
SS ☑ FLS ☑ ACS ☑
DATE: 05/12/2023

pjhm architects
LICENSED ARCHITECT
RICHARD W. PRIMUS
NO. C15585
REN. 02/25
STATE OF CALIFORNIA
OC Office: 24461 Ridge Route Drive #100, Laguna Hills, CA 92653 • SD Phone: 760.730.5527 • LA Office: 837 Traction Avenue, #410, Los Angeles, CA 90013 • OC Phone: 949.496.6191 • LA Phone: 213.278.0172 • SD Office: 804 Pier View Way #103, Oceanside, CA 92054 • Web: pjhm.com

HIGHLAND HIGH SCHOOL
50M POOL & AQUATICS CENTER

KERN HIGH SCHOOL DISTRICT

FLOOR PLAN DETAILS

A-3.5

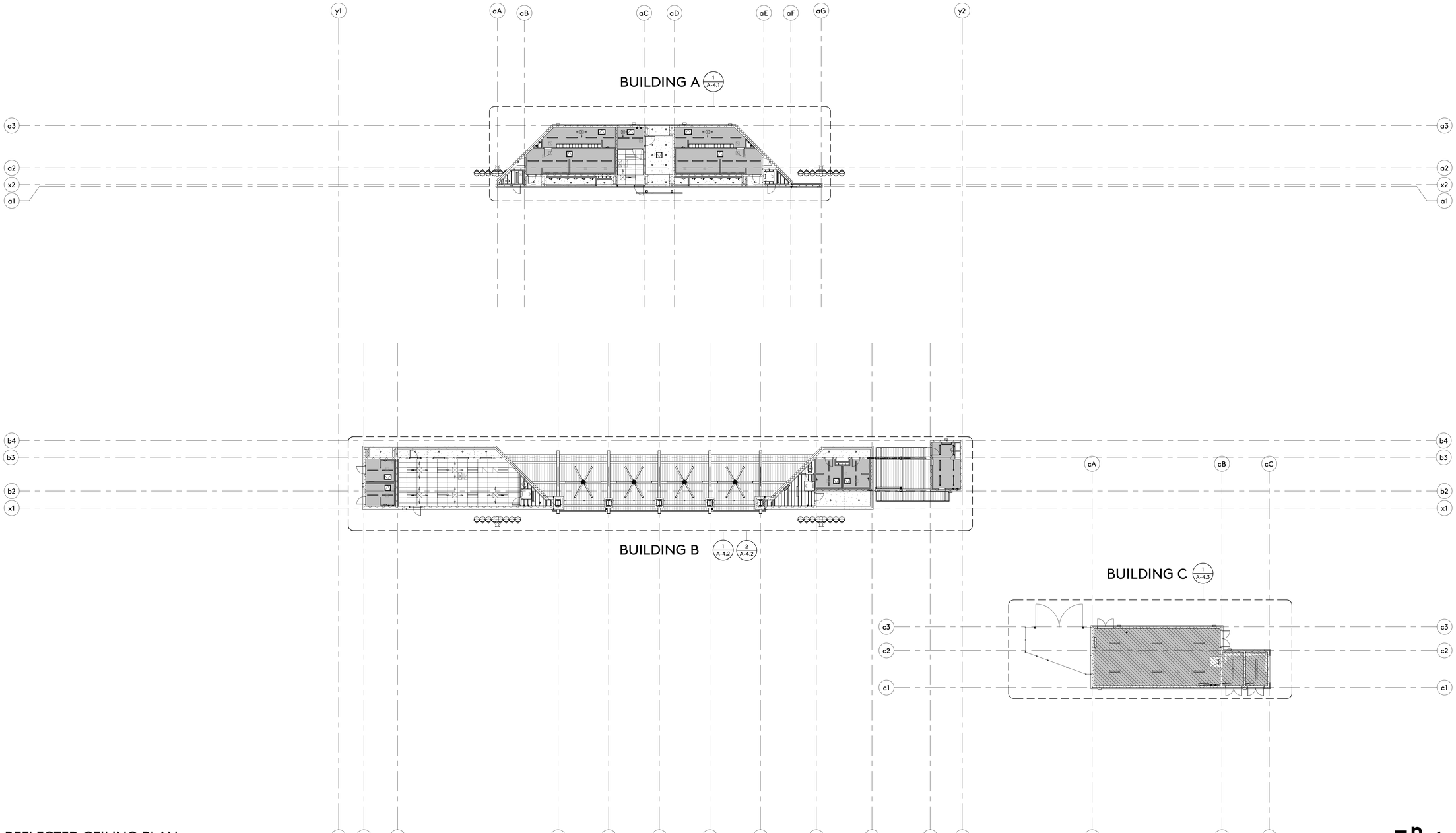

REFLECTED CEILING PLAN

1
1/16" = 1'-0"

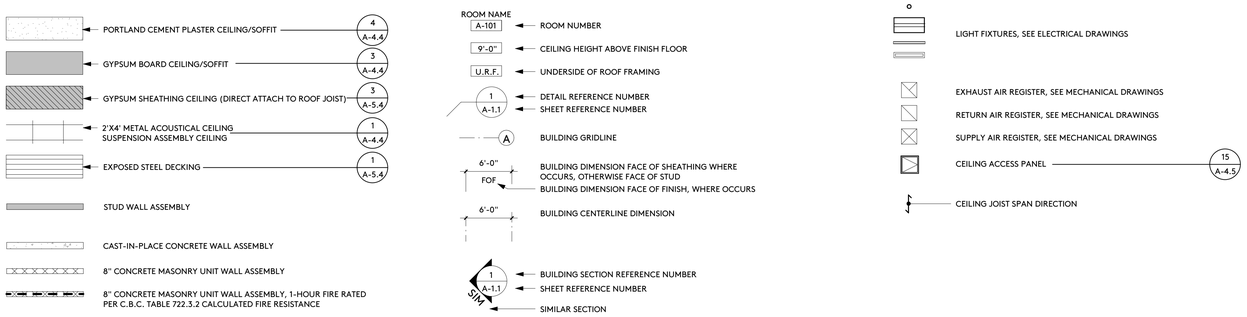

SYMBOLS

IDENTIFICATION STAMP
DIV. OF THE STATE ARCHITECT
APP: 03-122664 INC:
REVIEWED FOR
SS ☑ FLS ☑ ACS ☑
DATE: 05/12/2023

pjhm architects

LICENSED ARCHITECT
THOMAS W. KRUSE
NO. C15585
REN. 02/25
STATE OF CALIFORNIA

HIGHLAND HIGH SCHOOL
50M POOL & AQUATICS CENTER

KERN HIGH SCHOOL DISTRICT

REFLECTED CEILING PLAN - COMPOSITE

A-4.0

OC Office: 24461 Ridge Route Drive #100, Laguna Hills, CA 92653 • OC Phone: 949.496.6191 • SD Office: 804 Pier View Way #103, Oceanside, CA 92054 • SD Phone: 760.730.5527 • LA Office: 837 Traction Avenue, #410, Los Angeles, CA 90013 • LA Phone: 213.278.0172 • Web: pjhm.com

4/13/2023 9:04:55 AM

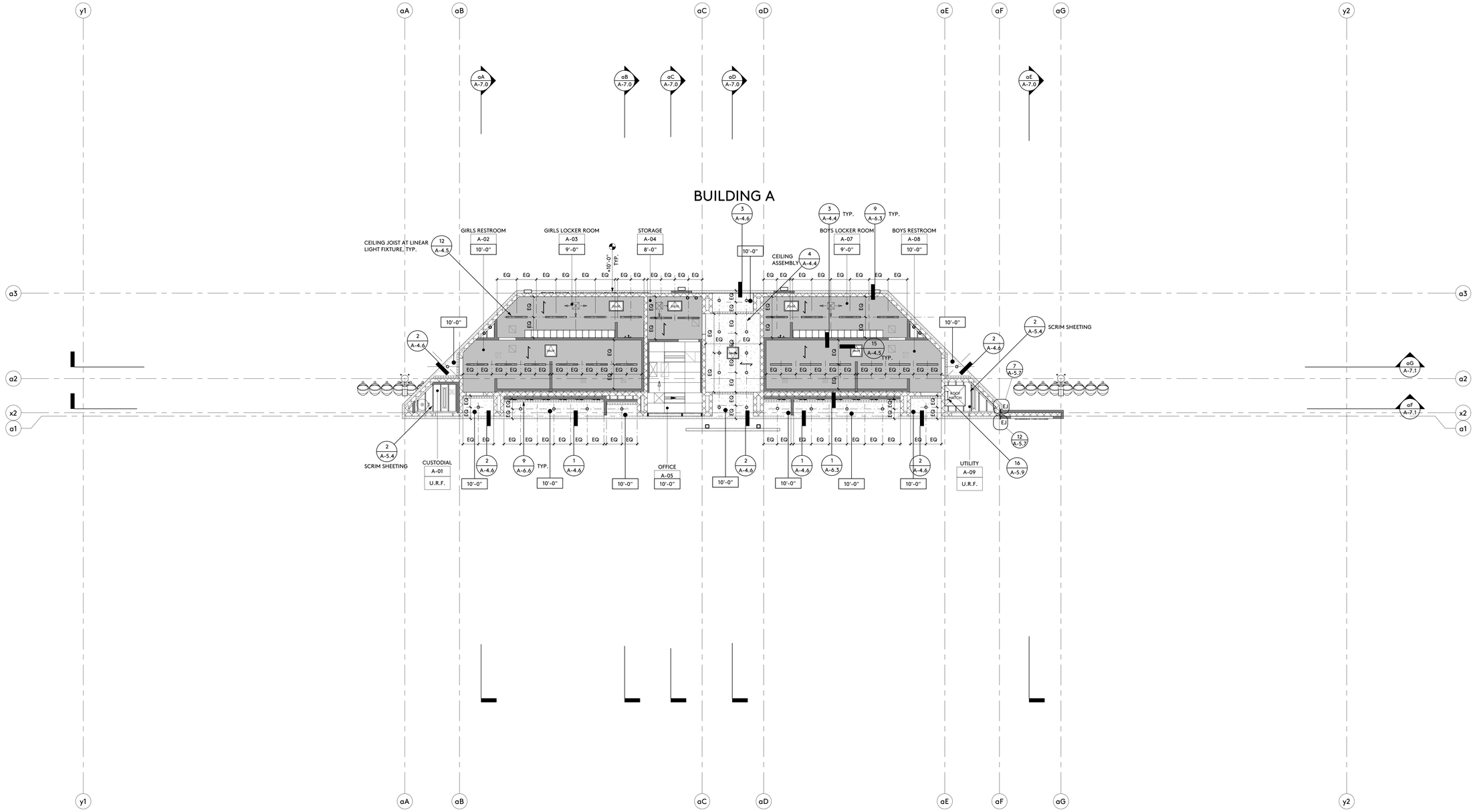

REFLECTED CEILING PLAN

1/8" = 1'-0"

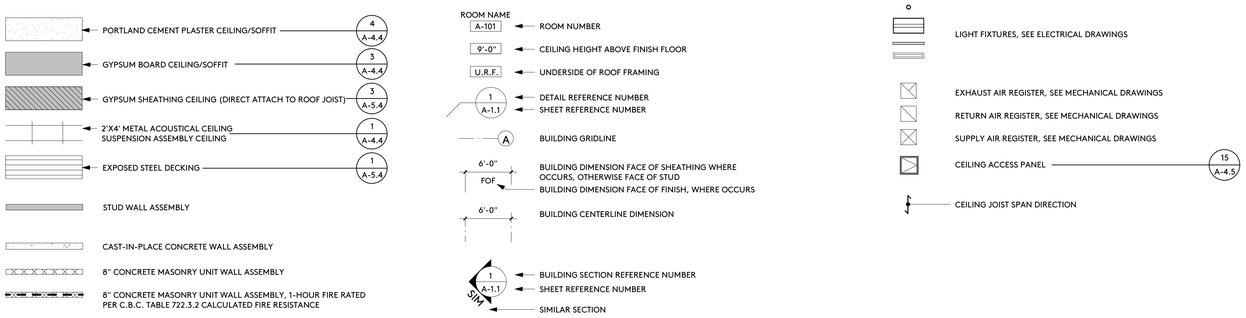

SYMBOLS

IDENTIFICATION STAMP
DIV. OF THE STATE ARCHITECT
APP: 03-122664 INC:
REVIEWED FOR
SS ☑ FLS ☑ ACS ☑
DATE: 05/12/2023

pjhm architects

LICENSED ARCHITECT
THOMAS W. KRUSE
NO. C15585
REN. 02/25
STATE OF CALIFORNIA

HIGHLAND HIGH SCHOOL
50M POOL & AQUATICS CENTER

KERN HIGH SCHOOL DISTRICT

REFLECTED CEILING PLAN

A-4.1

OC Office: 24461 Ridge Route Drive #100, Laguna Hills, CA 92653 • OC Phone: 949.496.6191 • SD Office: 804 Pier View Way #103, Oceanside, CA 920 54 • SD Phone: 760.730.5527 • LA Office: 837 Traction Avenue, #410, Los Angeles, CA 90013 • LA Phone: 213.278.0172 • Web: pjhm.com

4/13/2023 9:04:56 AM

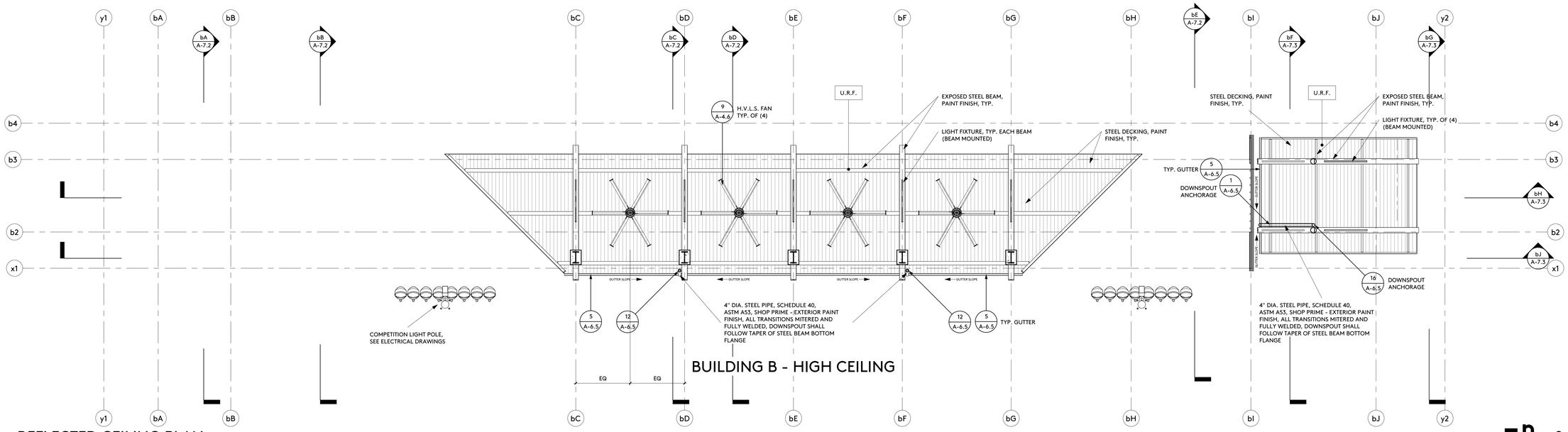

BUILDING B - HIGH CEILING

REFLECTED CEILING PLAN

1/8" = 1'-0"

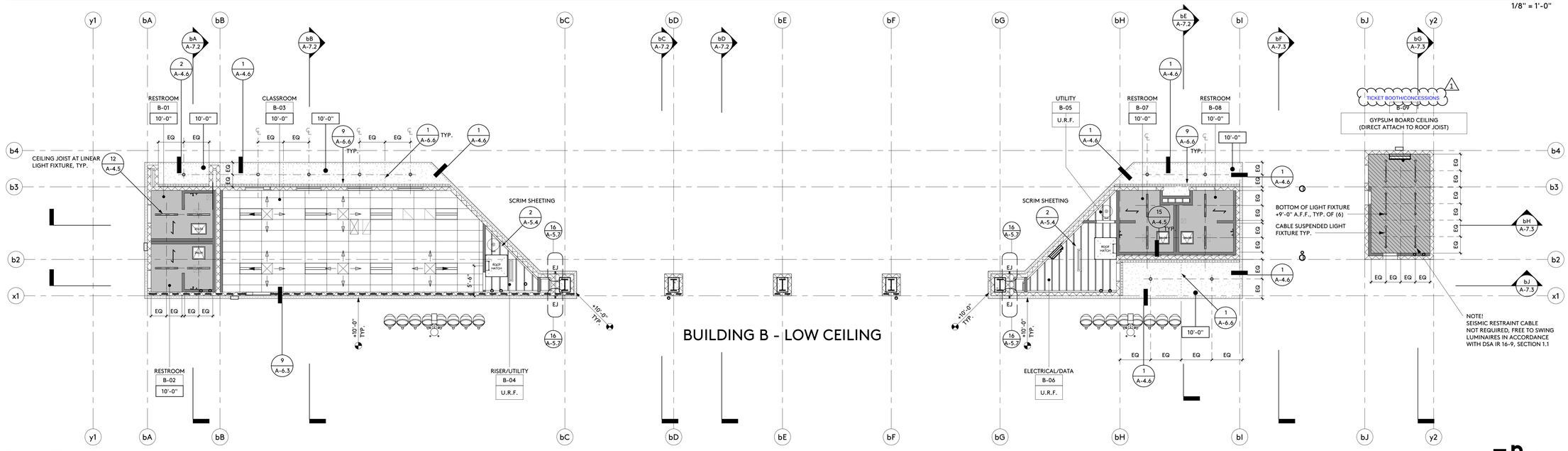

BUILDING B - LOW CEILING

REFLECTED CEILING PLAN

1/8" = 1'-0"

PORTLAND CEMENT PLASTER CEILING/SOFFIT — 4 A-4.4

GYPSUM BOARD CEILING/SOFFIT — 3 A-4.4

GYPSUM SHEATHING CEILING (DIRECT ATTACH TO ROOF JOIST) — 3 A-5.4

2'X4' METAL ACOUSTICAL CEILING SUSPENSION ASSEMBLY CEILING — 1 A-4.4

EXPOSED STEEL DECKING — 1 A-5.4

STUD WALL ASSEMBLY

CAST-IN-PLACE CONCRETE WALL ASSEMBLY

8" CONCRETE MASONRY UNIT WALL ASSEMBLY

8" CONCRETE MASONRY UNIT WALL ASSEMBLY, 1-HOUR FIRE RATED PER C.B.C. TABLE 722.3.2 CALCULATED FIRE RESISTANCE

ROOM NAME
A-101 — ROOM NUMBER
9'-0" — CEILING HEIGHT ABOVE FINISH FLOOR
U.R.F. — UNDERSIDE OF ROOF FRAMING
1 A-1.1 — DETAIL REFERENCE NUMBER / SHEET REFERENCE NUMBER
A — BUILDING GRIDLINE
6'-0" FOF — BUILDING DIMENSION FACE OF SHEATHING WHERE OCCURS, OTHERWISE FACE OF STUD / BUILDING DIMENSION FACE OF FINISH, WHERE OCCURS
6'-0" — BUILDING CENTERLINE DIMENSION
1 A-1.1 SIM — BUILDING SECTION REFERENCE NUMBER / SHEET REFERENCE NUMBER / SIMILAR SECTION

LIGHT FIXTURES, SEE ELECTRICAL DRAWINGS

EXHAUST AIR REGISTER, SEE MECHANICAL DRAWINGS

RETURN AIR REGISTER, SEE MECHANICAL DRAWINGS

SUPPLY AIR REGISTER, SEE MECHANICAL DRAWINGS

CEILING ACCESS PANEL — 15 A-4.5

CEILING JOIST SPAN DIRECTION

SYMBOLS

IDENTIFICATION STAMP
DIV. OF THE STATE ARCHITECT
APP: 03-122664 INC:
REVIEWED FOR
SS ☑ FLS ☑ ACS ☑
DATE: 05/12/2023

pjhm architects

LICENSED ARCHITECT
RICHARD W. PRIMUS
NO. C15585
REN. 02/25
STATE OF CALIFORNIA

HIGHLAND HIGH SCHOOL
50M POOL & AQUATICS CENTER

KERN HIGH SCHOOL DISTRICT

1 ADDENDUM NO. 1

REFLECTED CEILING PLAN

A-4.2

OC Office: 24461 Ridge Route Drive #100, Laguna Hills, CA 92653 • OC Phone: 949.496.6191 • SD Office: 804 Pier View Way #103, Oceanside, CA 92054 • SD Phone: 760.730.5527 • LA Office: 837 Traction Avenue, #410, Los Angeles, CA 90013 • LA Phone: 213.278.0172 • Web: pjhm.com

4/13/2023 9:05:01 AM

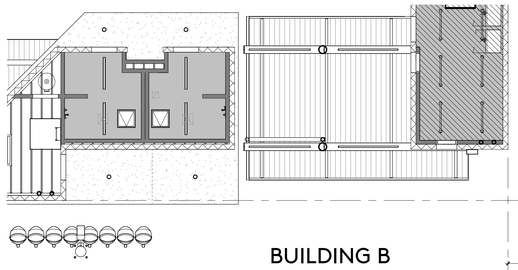

BUILDING B

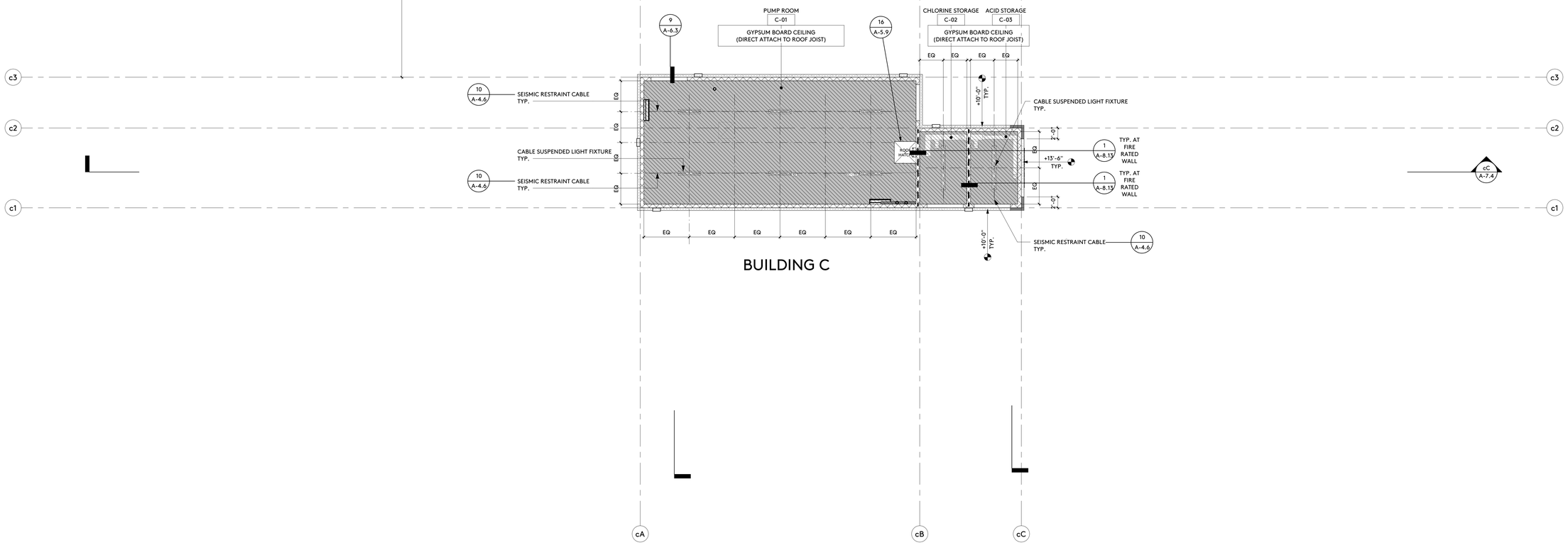

BUILDING C

REFLECTED CEILING PLAN

PORTLAND CEMENT PLASTER CEILING/SOFFIT — 4 / A-4.4

GYPSUM BOARD CEILING/SOFFIT — 3 / A-4.4

GYPSUM SHEATHING CEILING (DIRECT ATTACH TO ROOF JOIST) — 3 / A-5.4

2'X4' METAL ACOUSTICAL CEILING SUSPENSION ASSEMBLY CEILING — 1 / A-4.4

EXPOSED STEEL DECKING — 1 / A-5.4

STUD WALL ASSEMBLY

CAST-IN-PLACE CONCRETE WALL ASSEMBLY

8" CONCRETE MASONRY UNIT WALL ASSEMBLY

8" CONCRETE MASONRY UNIT WALL ASSEMBLY, 1-HOUR FIRE RATED PER C.B.C. TABLE 722.3.2 CALCULATED FIRE RESISTANCE

ROOM NAME
A-101 — ROOM NUMBER

9'-0" — CEILING HEIGHT ABOVE FINISH FLOOR

U.R.F. — UNDERSIDE OF ROOF FRAMING

1 / A-1.1 — DETAIL REFERENCE NUMBER / SHEET REFERENCE NUMBER

A — BUILDING GRIDLINE

6'-0" FOF — BUILDING DIMENSION FACE OF SHEATHING WHERE OCCURS, OTHERWISE FACE OF STUD / BUILDING DIMENSION FACE OF FINISH, WHERE OCCURS

6'-0" — BUILDING CENTERLINE DIMENSION

1 / A-1.1 SIM — BUILDING SECTION REFERENCE NUMBER / SHEET REFERENCE NUMBER / SIMILAR SECTION

LIGHT FIXTURES, SEE ELECTRICAL DRAWINGS

EXHAUST AIR REGISTER, SEE MECHANICAL DRAWINGS

RETURN AIR REGISTER, SEE MECHANICAL DRAWINGS

SUPPLY AIR REGISTER, SEE MECHANICAL DRAWINGS

CEILING ACCESS PANEL — 15 / A-4.5

CEILING JOIST SPAN DIRECTION

SYMBOLS

1/8" = 1'-0"

IDENTIFICATION STAMP
DIV. OF THE STATE ARCHITECT
APP: 03-122664 INC:
REVIEWED FOR
SS ☑ FLS ☑ ACS ☑
DATE: 05/12/2023

pjhm architects

LICENSED ARCHITECT
RICHARD W. PRIEBE
NO. C15585
REN. 02/25
STATE OF CALIFORNIA

OC Office: 24461 Ridge Route Drive #100, Laguna Hills, CA 92653 • SD Phone: 760.730.5527 • LA Office: 837 Traction Avenue, #410, Los Angeles, CA 90013 • LA Phone: 213.278.0172 • Web: pjhm.com

HIGHLAND HIGH SCHOOL
50M POOL & AQUATICS CENTER

KERN HIGH SCHOOL DISTRICT

REFLECTED CEILING PLAN

A-4.3

4/13/2023 9:05:01 AM

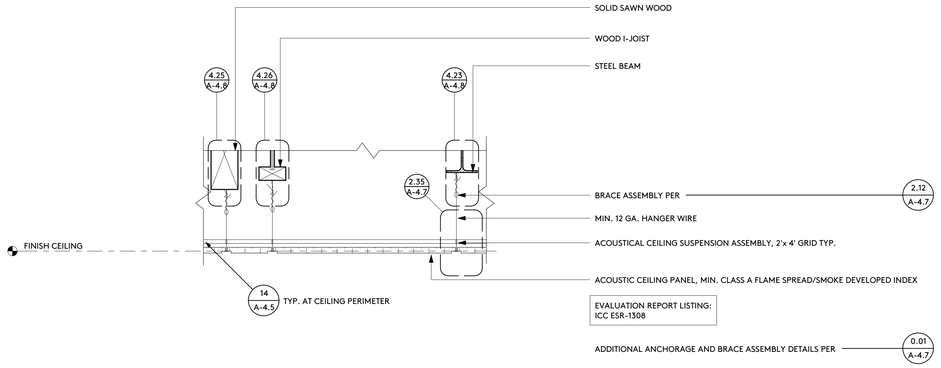

ASSEMBLY - ACOUSTICAL CEILING SUSPENSION SYSTEM 1

1 1/2" = 1'-0"

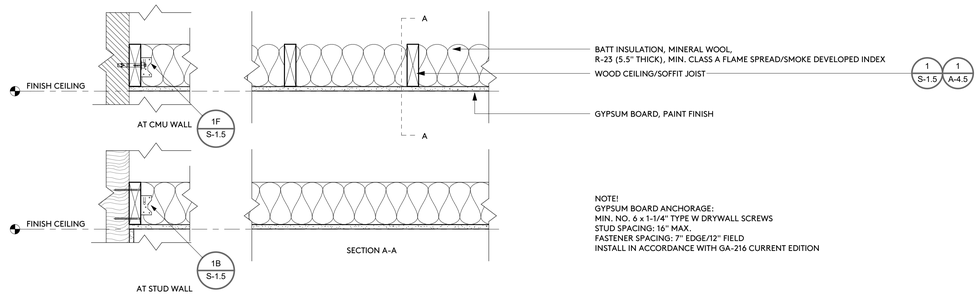

ASSEMBLY - GYPSUM BOARD CEILINGS/SOFFITS 3

1 1/2" = 1'-0"

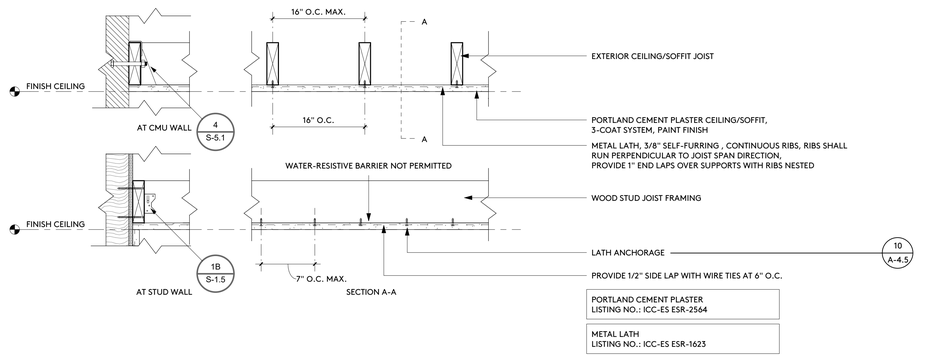

ASSEMBLY - PORTLAND CEMENT CEILINGS/SOFFITS 4

1 1/2" = 1'-0"

IDENTIFICATION STAMP
DIV. OF THE STATE ARCHITECT
APP: 03-122664 INC:
REVIEWED FOR
SS ☑ FLS ☑ ACS ☑
DATE: 05/12/2023

pjhm architects

LICENSED ARCHITECT
THOMAS W. KRUSE
NO. C15585
REN. 02/25
STATE OF CALIFORNIA

HIGHLAND HIGH SCHOOL
50M POOL & AQUATICS CENTER

KERN HIGH SCHOOL DISTRICT

REFLECTED CEILING PLAN DETAILS

A-4.4

OC Office: 24461 Ridge Route Drive #100, Laguna Hills, CA 92653 • OC Phone: 949.496.6191 • SD Office: 804 Pier View Way #103, Oceanside, CA 92054 • SD Phone: 760.730.5527 • LA Office: 837 Traction Avenue, #410, Los Angeles, CA 90013 • LA Phone: 213.278.0172 • Web: pjhm.com

4/13/2023 9:05:02 AM

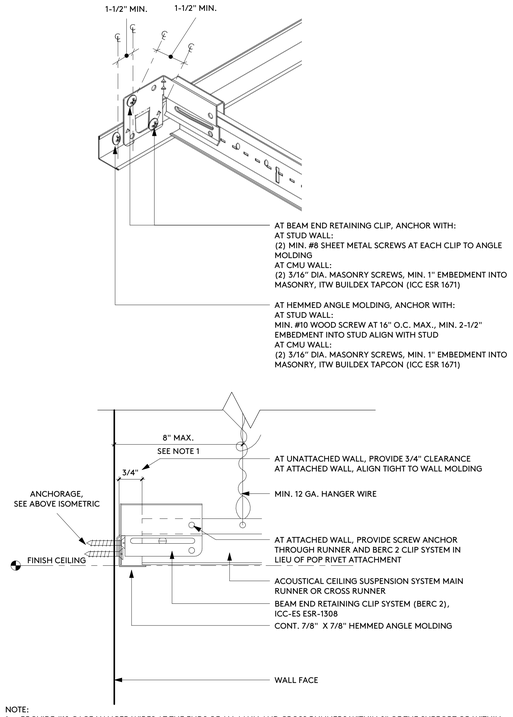

NOTE:
1. PROVIDE #12 GAGE HANGER WIRES AT THE ENDS OF ALL MAIN AND CROSS RUNNERS WITHIN 8" OF THE SUPPORT OR WITHIN 1/4 OF THE LENGTH OF THE END TEE, WHICHEVER IS LESS, FOR THE PERIMETER OF THE CEILING AREA. PERIMETER WIRES ARE NOT REQUIRED WHEN THE LENGTH TO THE END TEE IS 8" OR LESS

CEILING PERIMETER ANCHORAGE 14

6" = 1'-0"

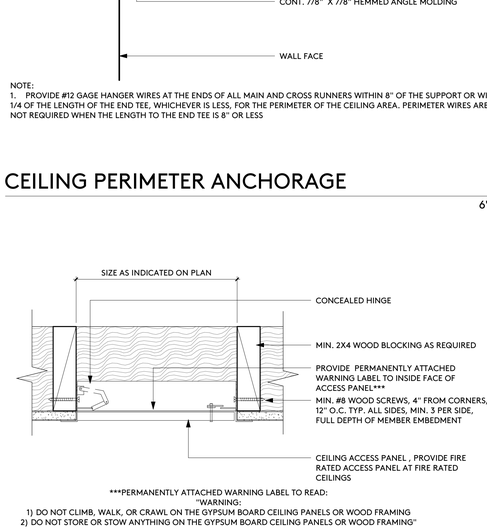

***PERMANENTLY ATTACHED WARNING LABEL TO READ:
"WARNING:
1) DO NOT CLIMB, WALK, OR CRAWL ON THE GYPSUM BOARD CEILING PANELS OR WOOD FRAMING
2) DO NOT STORE OR STOW ANYTHING ON THE GYPSUM BOARD CEILING PANELS OR WOOD FRAMING"

CEILING ACCESS PANEL 15

3" = 1'-0"

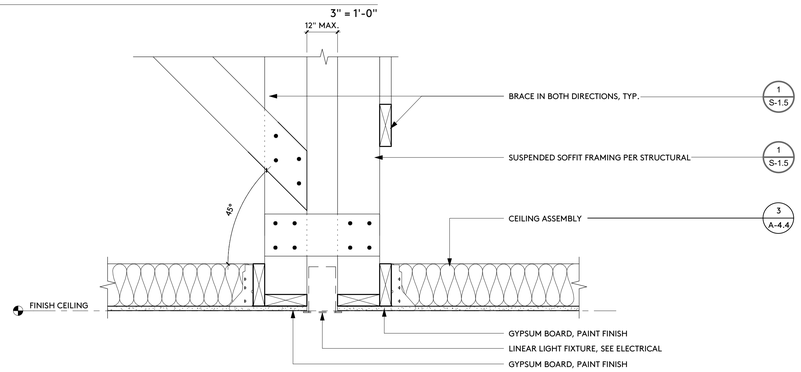

INTERIOR CEILING AT LIGHT FIXTURE 12

1 1/2" = 1'-0"

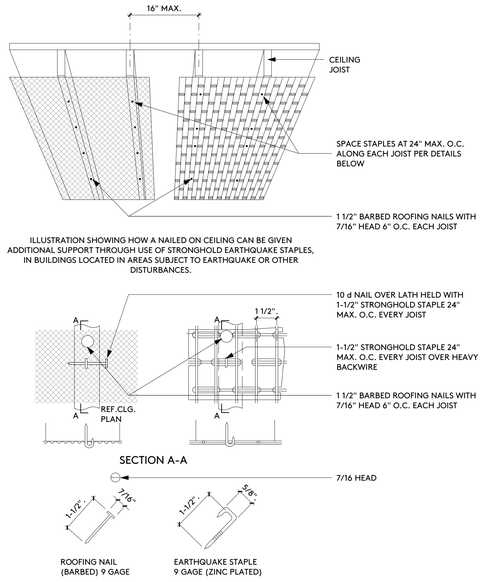

ILLUSTRATION SHOWING HOW A NAILED ON CEILING CAN BE GIVEN ADDITIONAL SUPPORT THROUGH USE OF STRONGHOLD EARTHQUAKE STAPLES, IN BUILDINGS LOCATED IN AREAS SUBJECT TO EARTHQUAKE OR OTHER DISTURBANCES.

LATH ANCHORAGE AT WOOD STUD JOIST 10

3/4" = 1'-0"

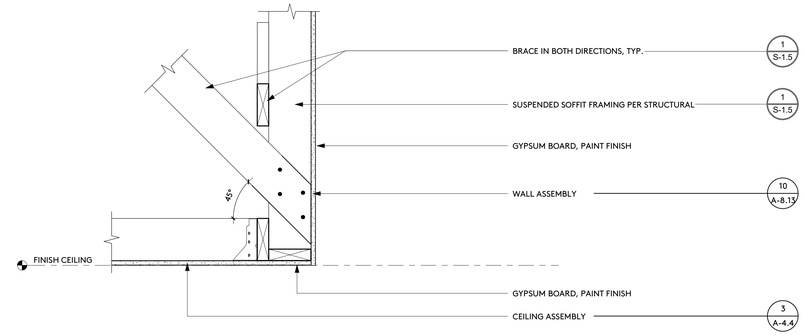

INTERIOR SUSPENDED SOFFITS 1

1 1/2" = 1'-0"

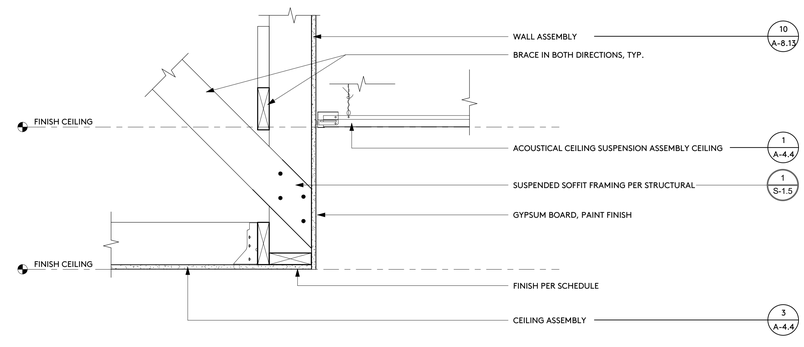

INTERIOR SUSPENDED SOFFITS 2

1 1/2" = 1'-0"

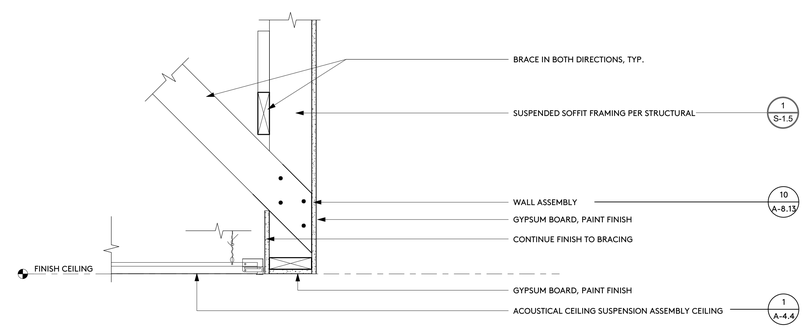

INTERIOR SUSPENDED SOFFITS 3

1 1/2" = 1'-0"

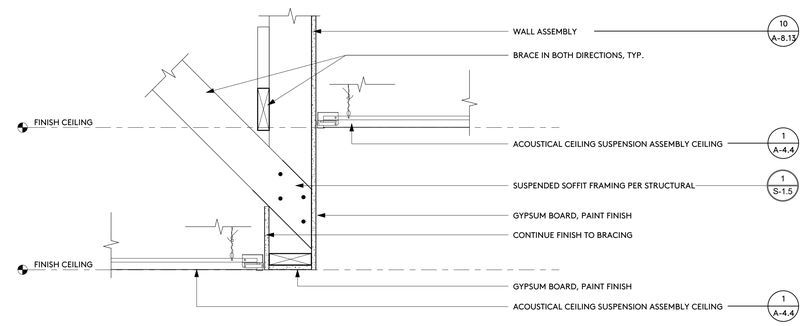

INTERIOR SUSPENDED SOFFITS 4

1 1/2" = 1'-0"

IDENTIFICATION STAMP
DIV. OF THE STATE ARCHITECT
APP: 03-122664 INC:
REVIEWED FOR
SS ☑ FLS ☑ ACS ☑
DATE: 05/12/2023

pjhm architects
LICENSED ARCHITECT
RICHARD W. RUSSELL
NO. C15585
REN. 02/25
STATE OF CALIFORNIA
LA Office: 837 Traction Avenue, #410, Los Angeles, CA 90013 • LA Phone: 213.278.0172 • Web: pjhm.com
SD Phone: 760.730.5527 • OC Office: 24461 Ridge Route Drive #100, Laguna Hills, CA 92653 • OC Phone: 949.496.6191 • SD Office: 804 Pier View Way #103, Oceanside, CA 92054

HIGHLAND HIGH SCHOOL
50M POOL & AQUATICS CENTER

KERN HIGH SCHOOL DISTRICT

REFLECTED CEILING PLAN DETAILS

A-4.5

4/13/2023 9:05:03 AM

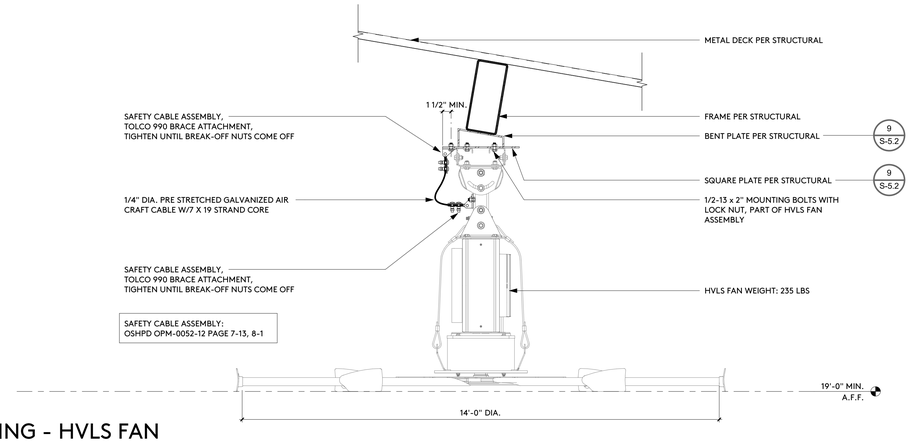

MOUNTING - HVLS FAN 9

1" = 1'-0"

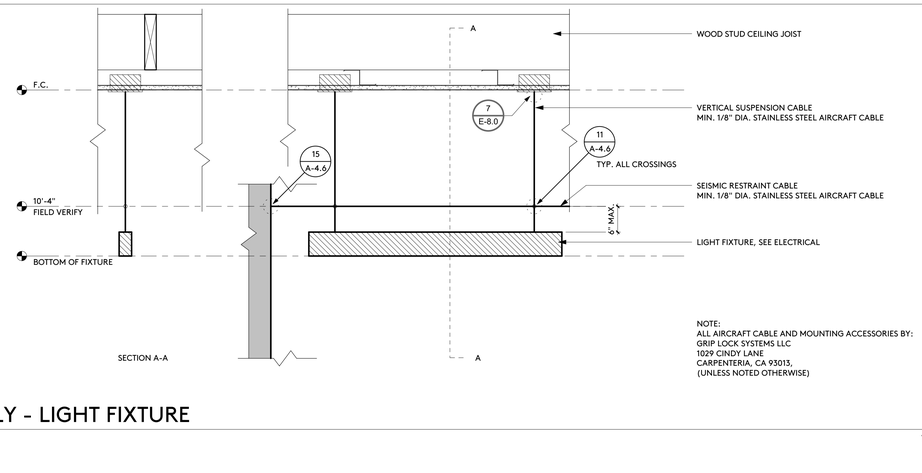

ASSEMBLY - LIGHT FIXTURE 10

1 1/2" = 1'-0"

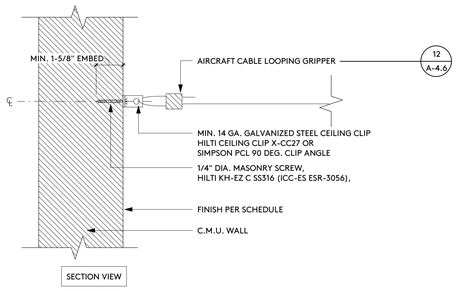

ANCHORAGE - TYPICAL BACKING 15

3" = 1'-0"

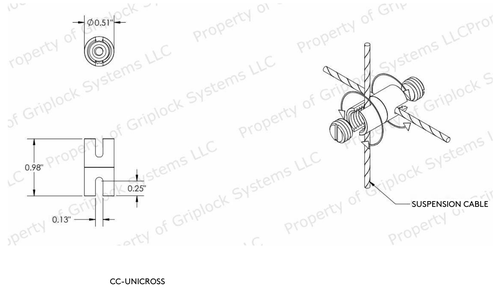

CABLE RESTRAINT - CC UNICROSS 11

3/4" = 1'-0"

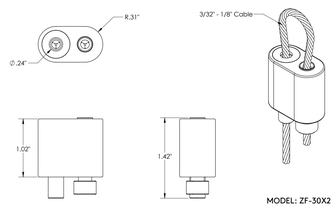

CABLE RESTRAINT - LOOPING GRIPPER 12

3/4" = 1'-0"

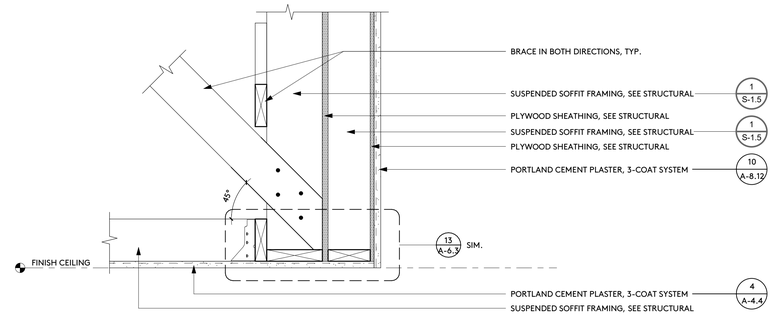

EXTERIOR SUSPENDED SOFFITS 1

1 1/2" = 1'-0"

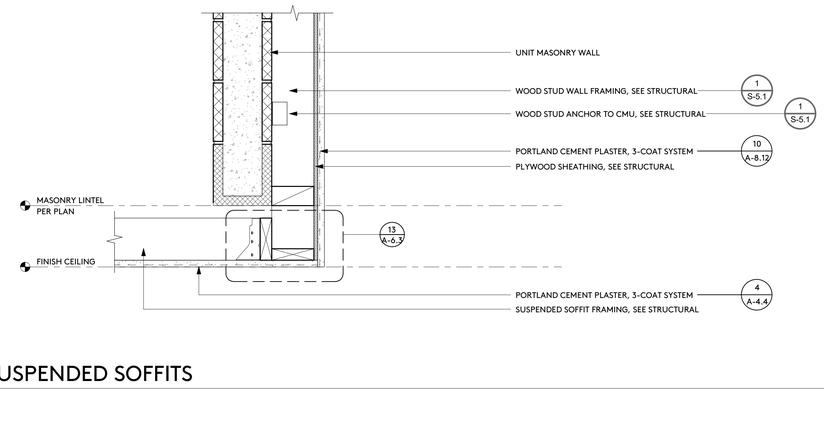

EXTERIOR SUSPENDED SOFFITS 2

1 1/2" = 1'-0"

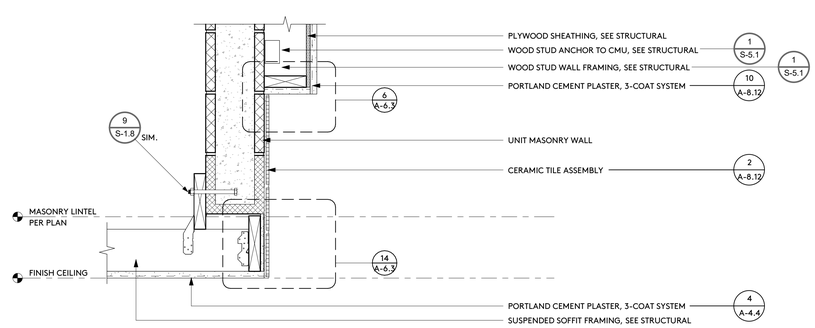

EXTERIOR SUSPENDED SOFFITS 3

1 1/2" = 1'-0"

IDENTIFICATION STAMP
DIV. OF THE STATE ARCHITECT
APP: 03-122664 INC:
REVIEWED FOR
SS ☑ FLS ☑ ACS ☑
DATE: 05/12/2023

pjhm architects

LICENSED ARCHITECT
RICHARD W. PRIMM
NO. C15585
REN. 02/25
STATE OF CALIFORNIA

LA Office: 837 Traction Avenue, #410, Los Angeles, CA 90013 • LA Phone: 213.278.0172 • Web: pjhm.com
SD Phone: 760.730.5527 • OC Phone: 949.496.6191 • SD Office: 804 Pier View Way #103, Oceanside, CA 92054
OC Office: 24461 Ridge Route Drive #100, Laguna Hills, CA 92653

HIGHLAND HIGH SCHOOL
50M POOL & AQUATICS CENTER

KERN HIGH SCHOOL DISTRICT

REFLECTED CEILING PLAN DETAILS

A-4.6

4/13/2023 9:05:04 AM

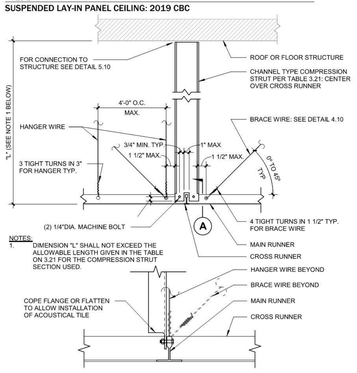

NOTES:
1. DIMENSION "L" SHALL NOT EXCEED THE ALLOWABLE LENGTH GIVEN IN THE TABLE ON 3.21 FOR THE COMPRESSION STRUT SECTION USED.

A SECTION
3" = 1'-0"

Detail Title:	REV: 09/21/2015	Detail No.
COMPRESSION STRUT - CHANNEL TYPE	REV: 03/2022	3.10

DSA IR 25-2.19 - SHEET 3.10 3.10

12" = 1'-0"

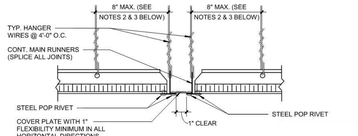

SEISMIC SEPARATION JOINT

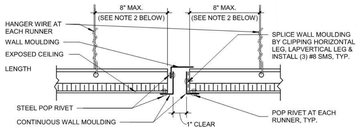

ALTERNATE SEISMIC SEPARATION JOINT

NOTES:
1. DETAILS APPLIES TO SEISMIC SEPARATION JOINT AT CONTINUOUS CEILING AREAS EXCEEDING 2500 SQ. FT. SEE CEILING PLANS FOR LOCATION.
2. PROVIDE #12 GAGE HANGER WIRES AT THE ENDS OF ALL MAIN AND CROSS RUNNERS WITHIN EIGHT (8) INCHES OF THE SUPPORT OR WITHIN ONE-FOURTH (1/4) OF THE LENGTH OF THE END TEE, WHICHEVER IS LESS, FOR THE PERIMETER OF THE CEILING AREA.
3. PERIMETER WIRES ARE NOT REQUIRED WHEN THE LENGTH OF THE END TEE IS EIGHT (8) INCHES OR LESS.

Detail Title:	REV: 09/21/2015	Detail No.
SEISMIC SEPARATION JOINT	REV: 03/2022	2.45

DSA IR 25-2.19 - SHEET 2.45 2.45

12" = 1'-0"

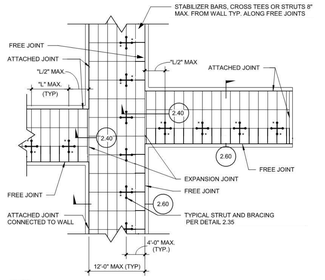

NOTES:
1. "L" IS MAX. BRACE ASSEMBLY SPACING PER CEILING PLAN DETAIL. FOR EXAMPLE, WHERE 8' x 12' SPACING IS SPECIFIED, USE "L" = 8'.

Detail Title:	REV: 09/21/2015	Detail No.
CORRIDOR CEILING PLAN (SCHOOL BUILDING)	REV: 03/2022	2.30

DSA IR 25-2.19 - SHEET 2.30 2.30

12" = 1'-0"

3.03 Hanger wires that are more than one (horizontal) in six (vertical) out of plumb shall have counter-sloping wires.

3.04 Slack safety wires shall be considered hanger wires for installation and testing requirements.

3.05 Hanger and bracing wire anchorage to the structure shall be installed in such a manner that the direction of the anchorage aligns closely with the direction of the wire (e.g., bracing wire ceiling clips must be bent as shown in the details and rotated as required to align closely with the direction of the wire, screw eyes in wood must be installed so they align closely with the direction of the wire, etc.).

4. FASTENERS AND WELDING

4.01 Sheet metal screws shall comply with ASTM C1513 and ASME B18.6.3. Penetration of screws through joined material shall not be less than three exposed threads.

4.02 Expansion anchors shall be:
HILTI KWIK BOLT TZ2, MIN. 3/8" DIA. (ICC-ES ESR-4266), 100 LB. MAX

4.03 Power-Actuated Fasteners shall be:
HILTI LOW-VELOCITY X-U15 (ICC-ES ESR-2269) W/ X-CC27 U22 CEILING CLIP (ICC-ES ESR-2184)

4.04 If not otherwise specified in the evaluation report, power-actuated fasteners installed in steel shall be installed so the entire pointed end of the fastener is driven through the steel member.

4.05 Power-actuated fasteners in concrete or masonry are not permitted for bracing wires.

4.06 Concrete reinforcement and prestressing tendons shall be located by non-destructive means prior to installing post-installed anchors.

4.07 Welding shall be in accordance with AWS D1.3 using E60XX series electrodes.

5. TESTING

5.01 All field testing must be performed in the presence of the project inspector.

5.02 Post-installed anchors in concrete used to support hanger wires shall be tested at a frequency of 10 percent. Power-actuated fasteners in concrete shall be field tested for 200 pounds in tension. All other post-installed anchors in concrete shall be tested in accordance with CBC Section 1910A.5.

5.03 Post-installed anchors in concrete used to attach bracing wires shall be tested at a frequency of 50 percent in accordance with CBC Section 1910A5.

6. LUMINAIRES

6.01 All luminaires shall be positively attached to the ceiling suspension systems by mechanical means to resist a horizontal force equal to the weight of the luminaire. A minimum of two screws or approved fasteners are required at each luminaire, per ASTM E580 Section 5.3.1.

6.02 Surface-mounted luminaires shall be attached to the main runner with at least two positive clamping devices. The clamping device shall completely surround the supporting

Detail Title:	REV: 09/21/2015	Detail No.
CEILING NOTES	REV: 03/2022	1.00

DSA IR 25-2.19 - SHEET 1.01 1.00

12" = 1'-0"

APPENDIX A: CONSTRUCTION DOCUMENTS CEILING NOTES AND DETAILS

See Sections 5.9 and 5.10 above for instruction and guidance on the proper use of these notes and details in the construction documents by the responsible design professional (RDP).

Sheet Index

Number	Title	Revision Date
1.00	Ceiling Notes	03/2022
2.12	Typ. Ceiling Plan for 12'-0" by 12'-0" Brace Assembly Spacing	03/2022
2.30	Corridor Ceiling Plan (School Buildings)	03/2022
2.35	Suspension and Lateral Bracing Assembly	03/2022
2.40	Expansion Joint (School Buildings)	03/2022
2.45	Seismic Separation Joint	03/2022
2.60	Ceiling Perimeter	03/2022
2.80	Luminaire / Air Terminal Support	03/2022
3.10	Compression Strut - Channel Type	03/2022
3.20	Compression Strut - EMT Type	03/2022
3.21	Compression Strut Table	03/2022
4.10	Hanger and Brace Wire Connections: Typ. Wire Turn	03/2022
4.11	Hanger and Brace Wire Connections Table	03/2022
4.23	Hanger Wire Connection to Structural Steel	03/2022
4.25	Hanger Wire Connection to Sawn Timber	03/2022
4.26	Hanger Wire Connection to Wood I-Joist	03/2022

0.03 A-4.7 · 2.30 A-4.7 · 2.40 A-4.7 · 2.60 A-4.7 · 3.10 A-4.7 · 3.21 A-4.7 · 4.11 A-4.8 · 4.25 A-4.8 · 2.12 A-4.7 · 2.35 A-4.7 · 2.45 A-4.7 · 2.80 A-4.7 · 3.20 A-4.7 · 4.10 A-4.8 · 4.23 A-4.8 · 4.26 A-4.8

Detail Title:	REV: 09/21/2015	Detail No.
SHEET INDEX	REV: 03/2022	0.01

DSA IR 25-2.19 - SHEET 0.01 0.01

12" = 1'-0"

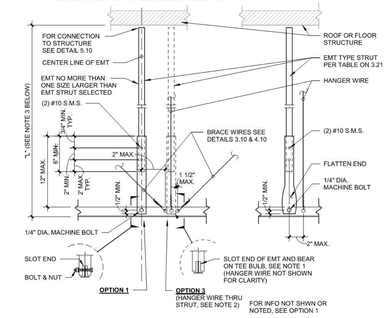

NOTES:
1. MACHINE BOLT IS NOT REQUIRED ON OPTION 3.
2. OPTION 3 IS PERMITTED ONLY WHERE THE ROOF OR FLOOR STRUCTURE IS SAWN TIMBER WITHOUT GYPSUM BOARD.
3. DIMENSION "L" SHALL NOT TO EXCEED THE ALLOWABLE LENGTH GIVEN IN THE TABLE ON 3.21 FOR THE COMPRESSION STRUT USED

Detail Title:	REV: 09/21/2015	Detail No.
COMPRESSION STRUT - EMT TYPE	REV: 03/2022	3.20

DSA IR 25-2.19 - SHEET 3.20 3.20

12" = 1'-0"

COMPRESSION STRUT EMT SECTION	MAXIMUM LENGTH
1/2" DIAMETER EMT (0.042" WALL THICKNESS)	3' - 11"
3/4" DIAMETER EMT (0.049" WALL THICKNESS)	6' - 4"
1" DIAMETER EMT (0.057" WALL THICKNESS)	9' - 9"
1 1/4" DIAMETER EMT (0.065" WALL THICKNESS)	12' - 9"
1 1/2" DIAMETER EMT (0.065" WALL THICKNESS)	14' - 9"
2" DIAMETER EMT (0.065" WALL THICKNESS)	18' - 10"

COMPRESSION STRUT CHANNEL SECTION	MAXIMUM LENGTH
250S125-33	5' - 10"
250S137-33	6' - 10"
362S137-33	8' - 0"
250S137-43	8' - 10"
400S137-43	10' - 10"

Detail Title:	REV: 09/21/2015	Detail No.
COMPRESSION STRUT TABLE	REV: 03/10/2017	3.21
	REV: 03/2022	

DSA IR 25-2.19 - SHEET 3.21 3.21

12" = 1'-0"

PROPRIETARY CLIP USED, SEE 14 A-4.5

ATTACHED JOINT

NOTES:

PROPRIETARY CLIP USED, SEE 14 A-4.5

FREE JOINT

Detail Title:	REV: 09/21/2015	Detail No.
CEILING PERIMETER	REV: 03/10/2017	2.60
	REV: 03/2022	

DSA IR 25-2.19 - SHEET 2.60 2.60

12" = 1'-0"

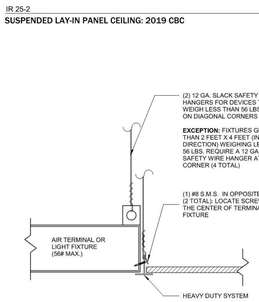

Detail Title:	REV: 09/21/2015	Detail No.
LUMINAIRE / AIR TERMINAL SUPPORT	REV: 02/10/2016	2.80
	REV: 03/2022	

DSA IR 25-2.19 - SHEET 2.80 2.80

12" = 1'-0"

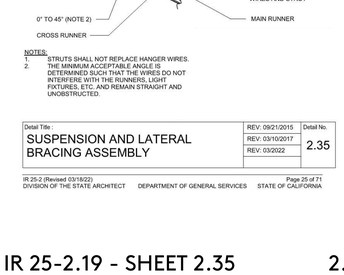

NOTES:
1. STRUTS SHALL NOT REPLACE HANGER WIRES.
2. THE MINIMUM ACCEPTABLE ANGLE IS DETERMINED SUCH THAT THE WIRES DO NOT INTERFERE WITH THE RUNNERS, LIGHT FIXTURES, ETC. AND REMAIN STRAIGHT AND UNOBSTRUCTED.

Detail Title:	REV: 09/21/2015	Detail No.
SUSPENSION AND LATERAL BRACING ASSEMBLY	REV: 03/10/2017	2.35
	REV: 03/2022	

DSA IR 25-2.19 - SHEET 2.35 2.35

12" = 1'-0"

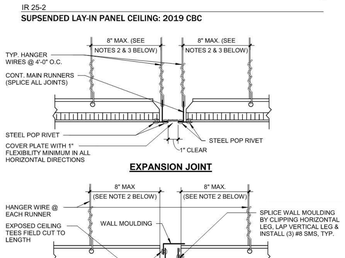

EXPANSION JOINT

EXPANSION JOINT ALTERNATE

NOTES:
1. DETAIL APPLIES TO EXPANSION JOINTS AT THE INTERSECTION OF CORRIDORS AND AT THE JUNCTIONS OF CORRIDORS AT LOBBIES AND OTHER SIMILAR AREAS.
2. PROVIDE #12 GAGE HANGER WIRES AT THE ENDS OF ALL MAIN AND CROSS RUNNERS WITHIN EIGHT (8) INCHES OF THE SUPPORT OR WITHIN ONE-FOURTH (1/4) OF THE LENGTH OF THE END TEE, WHICHEVER IS LESS, FOR THE PERIMETER OF THE CEILING AREA.
3. PERIMETER WIRES ARE NOT REQUIRED WHEN THE LENGTH OF THE END TEE IS EIGHT (8) INCHES OR LESS.

Detail Title:	REV: 09/21/2015	Detail No.
EXPANSION JOINT (SCHOOL BUILDING)	REV: 03/2022	2.40

DSA IR 25-2.19 - SHEET 2.40 2.40

12" = 1'-0"

ceiling runner and be made of steel with a minimum thickness of #14 gauge. Rotational spring catches do not comply. A #12 gauge slack safety wire shall be connected from each clamping device to the structure above. Provide additional supports when a luminaire is 8 feet or longer or exceeds 56 pounds. Maximum spacing between supports shall not exceed 8 feet.

6.03 Luminaires weighing less than or equal to 10 pounds may be supported directly on the ceiling runners, shall have a minimum of one #12 gauge slack safety wire connected from the fixture housing to the structure above.

6.04 Luminaires weighing greater than 10 pounds but less than or equal to 56 pounds may be supported directly on the ceiling runners, but they shall have a minimum of two #12 gauge slack safety wires connected from the fixture housing at diagonal corners to the structure above.

Exception: All luminaires greater than two by four feet weighing less than 56 pounds shall have a #12 gauge slack safety wire at each corner.

6.05 All luminaires weighing greater than 56 pounds shall be independently supported by not less than four taut #12 gauge hanger wires (one at each corner) attached from the fixture housing to the structure above or other approved hangers. The four taut #12 gauge wires or other approved hangers, including their attachment to the structure above, shall be capable of supporting four times the weight of the fixture.

7. SERVICES WITHIN THE CEILING

7.01 All flexible sprinkler hose fitting mounting brackets, ceiling-mounted air terminals or other services shall be positively attached to the ceiling suspension systems by mechanical means. Screws or approved fasteners are required. A minimum of two attachments are required at each component.

7.02 Ceiling-mounted air terminals or other services weighing less than or equal to 20 pounds shall have one #12 gauge slack safety wire attached from the terminal or service to the structure above.

7.03 Flexible sprinkler hose fittings, ceiling-mounted air terminals or other services weighing more than 20 pounds but less than or equal to 56 pounds shall have two #12 gauge slack safety wires (at diagonal corners) connected from the terminal or service to the structure above.

7.04 Flexible sprinkler hose fittings, ceiling-mounted air terminals or other services weighing more than 56 pounds shall be supported directly from the structure above by not less than four taut #12 gauge hanger wires attached from the terminal or service to the structure above or other approved hangers.

8. OTHER DEVICES WITHIN THE CEILING

8.01 All lightweight miscellaneous devices, such as strobe lights, occupancy sensors, speakers, exit signs, etc., shall be attached to the ceiling grid. In addition, devices weighing more than 10 pounds shall have a #12 gauge slack safety wire anchored to the structure above. Devices weighing more than 20 pounds shall be supported independently from the structure above.

Detail Title:	REV: 09/21/2015	Detail No.
CEILING NOTES	REV: 03/2022	1.00

DSA IR 25-2.19 - SHEET 1.02 1.02

12" = 1'-0"

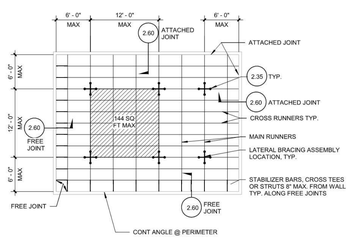

NOTE:
BRACING WIRES AND COMP. STRUT SHALL OCCUR AT EVERY 144 SQ. FT. MAX. IN ROOMS OVER 144 SQ. FT.

Detail Title:	REV: 09/21/2015	Detail No.
TYP. CEILING PLAN FOR 12'-0"x12'-0" BRACE ASSEMBLY SPACING	REV: 03/2022	2.12

DSA IR 25-2.19 - SHEET 2.12 2.12

12" = 1'-0"

Sheet Index

Number	Title	Revision Date
4.29	Typical Saddle Tie Detail	03/2022
4.33	Brace Wire Connection to Structural Steel	03/2022
4.35	Brace Wire Connection to Sawn Timber	03/2022
4.36	Brace Wire Connection to Wood I-Joist	03/2022
4.37	Brace Wire Connection to Wood I-Joist	09/21/2015
5.10	Compression Strut Connection Table	03/2022
5.40	Strut Connection to Structural Steel	03/2022
5.50	Strut Connection to Sawn Timber with Gypsum Board	03/2022
5.51	Strut Connection to Sawn Timber without Gypsum Board	03/2022
5.52	Strut Connection to I-Joist	03/2022
6.10	Ceiling Wire Splices	03/2022

4.29 A-4.8 · 4.35 A-4.9 · 4.37 A-4.9 · 5.40 A-4.9 · 5.51 A-4.9 · 6.10 A-4.9 · 4.33 A-4.9 · 4.36 A-4.9 · 5.10 A-4.9 · 5.50 A-4.9 · 5.52 A-4.9

Detail Title:	REV: 09/21/2015	Detail No.
SHEET INDEX	REV: 03/2022	0.01

DSA IR 25-2.19 - SHEET 0.02 0.02

12" = 1'-0"

1. CEILING SYSTEM GENERAL NOTES

1.01 Ceiling system components shall comply with ASTM C635 and Section 5.1 of ASTM E580.

1.02 The ceiling grid system must be rated heavy duty as defined by ASTM C635.

1.03 Ceiling systems. The following ceiling system(s) is/are part of the scope of this project:
Manufacturer: ARMSTRONG WORLD INDUSTRIES, INC.
Product Name: PRELUDE XL
Evaluation Report Type and Number: ICC-ES ESR-1308
Main Runner Part, Model, or Catalog Number: PRELUDE XL 7501
Cross Runner Part, Model, Catalog Number: PRELUDE XL 7528, XL 7541

1.04 Seismic Wall Clip: 2" BEAM END RETAINING CLIP
Manufacturer's Model: ARMSTRONG BERC2

1.05 Ceiling panels shall not support any luminaires, air terminals or devices.

1.06 For ceiling installations utilizing acoustical tile panels of mineral or glass fiber, it is not mandatory to provide ½" clearance between the acoustical tile panels and the wall on the sides of the ceiling which are free to slip. For all other ceiling panel types, provide ½" clearance between the ceiling panel and the wall on the sides of the ceiling free to slip. Clearance between ceiling grid runners/members and walls shall comply with the details on these drawings regardless of ceiling tile material.

2. MATERIALS

2.01 Ceiling wire shall be Class 1 zinc coated (galvanized) carbon steel conforming to ASTM A641. Wire shall be #12 gauge (0.106" diameter) with soft temper and minimum ultimate tensile strength = 70 ksi.

2.02 Galvanized sheet steel (including that used for metal stud and track compression struts/posts) shall conform to ASTM A653, or other equivalent sheet steel listed in Section A3.1 of the North American Specification for the Design of Cold-Formed Steel Structural Members, (AISI S100). Material 43 mil (18 gauge) and lighter shall have minimum yield strength of 33 ksi. Material 54 mil (16 gauge) and heavier shall have a minimum yield strength of 50 ksi.

2.03 Electrical metallic tube (EMT) shall be ANSI C80.3/UL 797 carbon steel with G90 galvanizing. EMT shall have minimum yield strength (F_y) of 30 ksi and minimum ultimate strength (F_u) of 48 ksi.

3. ATTACHMENT OF HANGER AND BRACING WIRES

3.01 Separate all ceiling hanger and bracing wires at least 6 inches from all unbraced ducts, pipes, conduit, etc.

3.02 Hanger and bracing wires shall not attach to or bend around obstructions including but not limited to piping, ductwork, conduit and equipment.

Detail Title:	REV: 09/21/2015	Detail No.
CEILING NOTES	REV: 03/2022	1.00

DSA IR 25-2.19 - SHEET 1.00 0.03

12" = 1'-0"

IDENTIFICATION STAMP
DIV. OF THE STATE ARCHITECT
APP: 03-122664 INC:
REVIEWED FOR
SS ☑ FLS ☑ ACS ☑
DATE: 05/12/2023

pjhm architects
LA Phone: 213.278.0172 • Web: pjhm.com
LA Office: 837 Traction Avenue, #410, Los Angeles, CA 90013 • OC Phone: 949.496.6191 • SD Office: 804 Pier View Way #103, Oceanside, CA 92054 • SD Phone: 760.730.5527
OC Office: 24461 Ridge Route Drive #100, Laguna Hills, CA 92653

LICENSED ARCHITECT
RICHARD W. PRIMM
NO. C15585
REN. 02/25
STATE OF CALIFORNIA

HIGHLAND HIGH SCHOOL
50M POOL & AQUATICS CENTER

KERN HIGH SCHOOL DISTRICT

REFLECTED CEILING PLAN DETAILS

A-4.7

4/13/2023 9:05:05 AM

IR 25-2
SUSPENDED LAY-IN PANEL CEILING: 2019 CBC

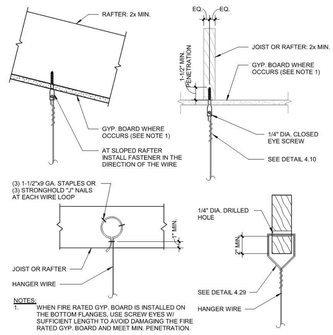

NOTES:
1. WHEN FIRE RATED GYP. BOARD IS INSTALLED ON THE BOTTOM FLANGES, USE SCREW EYES W/ SUFFICIENT LENGTH TO AVOID DAMAGING THE FIRE RATED GYP. BOARD AND MEET MIN. PENETRATION.

Detail Title :	REV: 09/21/2015	Detail No.
HANGER WIRE CONNECTION TO SAWN TIMBER	REV: 03/2022	4.25

DSA IR 25-2.19 - SHEET 4.25 4.25

12" = 1'-0"

IR 25-2
SUSPENDED LAY-IN PANEL CEILING: 2019 CBC

HANGER WIRE

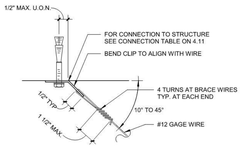

BRACE WIRE

Detail Title :	REV: 09/21/2015	Detail No.
HANGER AND BRACE WIRE CONNECTION - TYP. WIRE TURNS	REV: 03/2022	4.10

DSA IR 25-2.19 - SHEET 4.10 4.10

12" = 1'-0"

IR 25-2
SUSPENDED LAY-IN PANEL CEILING: 2019 CBC

NOTES:
1. WHEN FIRE RATED GYP. BOARD IS INSTALLED ON THE BOTTOM FLANGES, USE SCREW EYES W/ SUFFICIENT LENGTH TO AVOID DAMAGING THE FIRE RATED GYP. BOARD AND MEET MIN. PENETRATION.

Detail Title :	REV: 09/21/2015	Detail No.
HANGER WIRE CONNECTION TO WOOD I-JOIST	REV: 03/2022	4.26

DSA IR 25-2.19 - SHEET 4.26 4.26

12" = 1'-0"

IR 25-2
SUSPENDED LAY-IN PANEL CEILING: 2019 CBC

STRUCTURAL SYSTEM OF FLOOR/ ROOF ABOVE SUSPENDED CEILING	APPLICABLE HANGER WIRE DETAIL	APPLICABLE BRACE WIRE DETAIL
STRUCTURAL STEEL	4.23	4.33
SAWN TIMBER	4.25 & 4.29	4.35
WOOD I-JOIST	4.26	4.36 & 4.37

4.23 A-4.8 — 4.33 A-4.9
4.25 A-4.8, 4.29 A-4.8 — 4.35 A-4.9
4.26 A-4.8 — 4.36 A-4.9, 4.37 A-4.9

Detail Title :	REV: 09/21/2015	Detail No.
HANGER AND BRACE WIRE CONNECTION TABLE	REV: 03/2022	4.11

DSA IR 25-2.19 - SHEET 4.11 4.11

12" = 1'-0"

IR 25-2
SUSPENDED LAY-IN PANEL CEILING: 2019 CBC

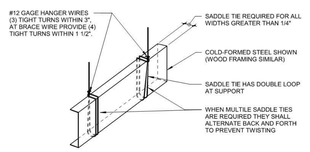

Detail Title :	REV: 09/21/2015	Detail No.
TYPICAL SADDLE TIE DETAIL	REV: 03/2022	4.29

DSA IR 25-2.19 - SHEET 4.29 4.29

12" = 1'-0"

IR 25-2
SUSPENDED LAY-IN PANEL CEILING: 2019 CBC

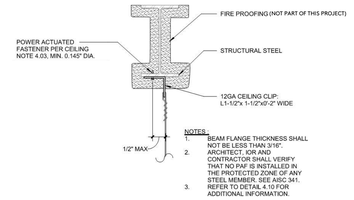

HANGER WIRE

Detail Title :	REV: 09/21/2015	Detail No.
HANGER WIRE CONNECTION TO STRUCTURAL STEEL	REV: 03/2022	4.23

DSA IR 25-2.19 - SHEET 4.23 4.23

12" = 1'-0"

IDENTIFICATION STAMP
DIV. OF THE STATE ARCHITECT
APP: 03-122664 INC:
REVIEWED FOR
SS ☑ FLS ☑ ACS ☑
DATE: 05/12/2023

pjhm architects
LA Office: 837 Traction Avenue, #410, Los Angeles, CA 90013 • LA Phone: 213.278.0172 • Web: pjhm.com
SD Office: 804 Pier View Way #103, Oceanside, CA 92054 • SD Phone: 760.730.5527 • OC Phone: 949.496.6191 • OC Office: 24461 Ridge Route Drive #100, Laguna Hills, CA 92653

LICENSED ARCHITECT
RICHARD W. FRIEDMAN
NO. C15585
REN. 02/25
STATE OF CALIFORNIA

HIGHLAND HIGH SCHOOL
50M POOL & AQUATICS CENTER

KERN HIGH SCHOOL DISTRICT

REFLECTED CEILING PLAN DETAILS

A-4.8

4/13/2023 9:05:06 AM

IR 25-2
SUSPENDED LAY-IN PANEL CEILING: 2019 CBC

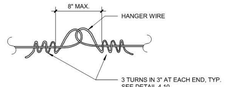

HANGER WIRE ONLY

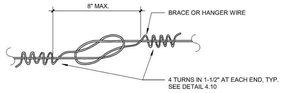

HANGER OR BRACE WIRE

NOTES:
1. WIRE SPLICES ARE SHOWN LOOSELY TIED FOR ILLUSTRATIVE PURPOSES ONLY AND SHALL BE DRAWN TIGHT TO COMPLETE INSTALLATION WHEN CONSTRUCTED.
2. WIRE LOOPS SHALL BE TIGHTLY WRAPPED AND SHARPLY BENT THE FIRST TIME ANY VERTICAL MOVEMENT OR ROTATION WITHIN THE LOOPS.
3. EACH HANGER AND BRACE WIRE SHALL BE SPLICED NO MORE THAN ONCE ALONG ITS LENGTH.

Detail Title:	REV: 09/21/2015	Detail No.
CEILING WIRE SPLICES	REV: 03/2022	6.10

DSA IR 25-2.19 - SHEET 6.10 6.10
12" = 1'-0"

IR 25-2
SUSPENDED LAY-IN PANEL CEILING: 2019 CBC

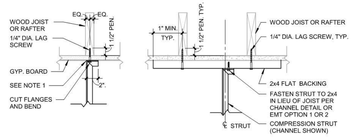

CHANNEL STRUT **CHANNEL OR EMT STRUT: BETWEEN JOIST**

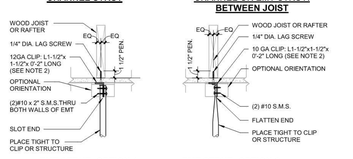

EMT STRUT: OPTION 1 **EMT STRUT: OPTION 2**

NOTES:
1. WEB OF CHANNEL TO BEAR WITHIN WIDTH OF THE WOOD MEMBER.
2. FOR ANGLE ORIENTED IN THE STANDARD POSITION, VERTICAL LEG TO FALL WITHIN THE WIDTH OF THE WOOD MEMBER.
3. PEN. = MINIMUM PENETRATION OF LAG SCREW THREADS INTO THE WOOD MEMBER.
4. NO. 14 WOOD SCREW MAY BE USED IN LIEU OF 1/4" LAG SCREW.

Detail Title:	REV: 09/21/2015	Detail No.
STRUT CONNECTION TO SAWN TIMBER WITH GYPSUM BOARD	REV: 03/2022	5.50

DSA IR 25-2.19 - SHEET 5.50 5.50
12" = 1'-0"

IR 25-2
SUSPENDED LAY-IN PANEL CEILING: 2019 CBC

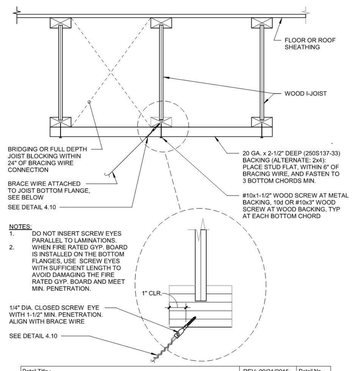

NOTES:
1. DO NOT INSERT SCREW EYES PARALLEL TO LAMINATIONS. WHEN FIRE RATED GYP. BOARD IS INSTALLED ON THE BOTTOM FLANGES, USE SCREW EYES WITH SUFFICIENT LENGTH TO AVOID DAMAGING THE FIRE RATED GYP. BOARD AND MEET MIN. PENETRATION.
2.

Detail Title:	REV: 09/21/2015	Detail No.
BRACE WIRE CONNECTION TO WOOD I - JOIST	REV: 03/2022	4.37

DSA IR 25-2.19 - SHEET 4.37 4.37
12" = 1'-0"

IR 25-2
SUSPENDED LAY-IN PANEL CEILING: 2019 CBC

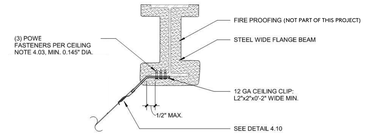

BRACING WIRE

NOTES:
1. BEAM FLANGE THICKNESS SHALL NOT BE LESS THAN 3/16".
2. ARCHITECT, IOR, AND CONTRACTOR SHALL VERIFY THAT NO POWER ACTUATED FASTENER IS INSTALLED IN THE PROTECTED ZONE OF ANY STEEL MEMBER. SEE AISC 341.
3. REFER TO DETAIL 4.10 FOR ADDITIONAL INFORMATION.

Detail Title:	REV: 09/21/2015	Detail No.
BRACE WIRE CONNECTION TO STRUCTURAL STEEL	REV: 03/2022	4.33

DSA IR 25-2.19 - SHEET 4.33 4.33
12" = 1'-0"

IR 25-2
SUSPENDED LAY-IN PANEL CEILING: 2019 CBC

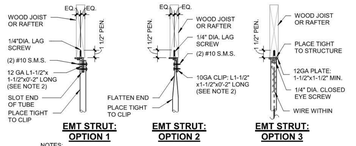

CHANNEL STRUT: OPTION 1 **CHANNEL STRUT: OPTION 2** **CHANNEL OR EMT STRUT: BETWEEN JOIST**

EMT STRUT: OPTION 1 **EMT STRUT: OPTION 2** **EMT STRUT: OPTION 3**

NOTES:
1. WEB OF CHANNEL TO BEAR WITHIN WIDTH OF WOOD MEMBER.
2. VERTICAL LEG OF MEMBER TO FALL WITHIN THE WIDTH OF THE WOOD MEMBER.
3. SEE DETAIL 5.50 FOR ADDITIONAL INFORMATION.
4. PEN. = MINIMUM PENETRATION OF LAG SCREW THREADS INTO THE WOOD MEMBER.
5. NO. 14 WOOD SCREW MAY BE USED IN LIEU OF 1/4" LAG SCREW.

Detail Title:	REV: 09/21/2015	Detail No.
STRUT CONNECTION TO SAWN TIMBER WITHOUT GYPSUM BOARD	REV: 03/2022	5.51

DSA IR 25-2.19 - SHEET 5.51 5.51
12" = 1'-0"

IR 25-2
SUSPENDED LAY-IN PANEL CEILING: 2019 CBC

STRUCTURAL SYSTEM OF FLOOR/ ROOF ABOVE SUSPENDED CEILING	APPLICABLE DETAIL
[redacted]	
STRUCTURAL STEEL	5.40
SAWN TIMBER WITH GYPSUM BOARD	5.50
SAWN TIMBER WITHOUT GYPSUM BOARD	5.51
WOOD I-JOIST	5.52

Detail Title:	REV: 09/21/2015	Detail No.
COMPRESSION STRUT CONNECTION TABLE	REV: 03/2022	5.10

DSA IR 25-2.19 - SHEET 5.10 5.10
12" = 1'-0"

IR 25-2
SUSPENDED LAY-IN PANEL CEILING: 2019 CBC

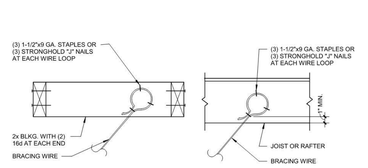

Detail Title:	REV: 09/21/2015	Detail No.
BRACE WIRE CONNECTION TO SAWN TIMBER	REV: 03/2022	4.35

DSA IR 25-2.19 - SHEET 4.35 4.35
12" = 1'-0"

IR 25-2
SUSPENDED LAY-IN PANEL CEILING: 2019 CBC

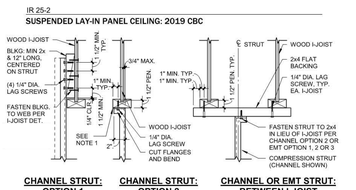

CHANNEL STRUT: OPTION 1 **CHANNEL STRUT: OPTION 2** **CHANNEL OR EMT STRUT: BETWEEN I-JOIST**

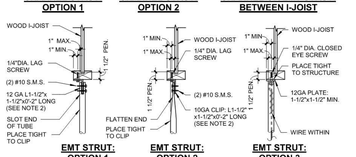

EMT STRUT: OPTION 1 **EMT STRUT: OPTION 2** **EMT STRUT: OPTION 3**

NOTES:
1. WEB OF CHANNEL TO BEAR WITHIN WIDTH OF WOOD MEMBER.
2. VERTICAL LEG OF MEMBER TO FALL WITHIN THE WIDTH OF THE WOOD MEMBER.
3. SEE DETAIL 5.50 FOR ADDITIONAL INFORMATION.
4. PEN = MINIMUM PENETRATION OF LAG SCREW THREADS INTO THE WOOD MEMBER.
5. NO. 14 WOOD SCREW MAY BE USED IN LIEU OF 1/4" LAG SCREW.

Detail Title:	REV: 03/2022	Detail No.
STRUT CONNECTION TO I-JOIST		5.52

DSA IR 25-2.19 - SHEET 5.52 5.52
12" = 1'-0"

IR 25-2
SUSPENDED LAY-IN PANEL CEILING: 2019 CBC

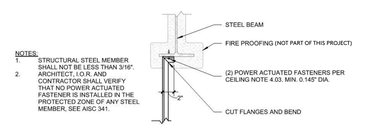

NOTES:
1. STRUCTURAL STEEL MEMBER SHALL NOT BE LESS THAN 3/16".
2. ARCHITECT, I.O.R. AND CONTRACTOR SHALL VERIFY THAT NO POWER ACTUATED FASTENER IS INSTALLED IN THE PROTECTED ZONE OF ANY STEEL MEMBER, SEE AISC 341.

CHANNEL STRUT

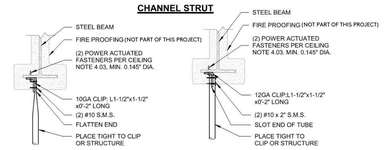

EMT STRUT: OPTION 1 **EMT STRUT: OPTION 2**

Detail Title:	REV: 09/21/2015	Detail No.
STRUT CONNECTION TO STRUCTURAL STEEL	REV: 03/2022	5.40

DSA IR 25-2.19 - SHEET 5.40 5.40
12" = 1'-0"

IR 25-2
SUSPENDED LAY-IN PANEL CEILING: 2019 CBC

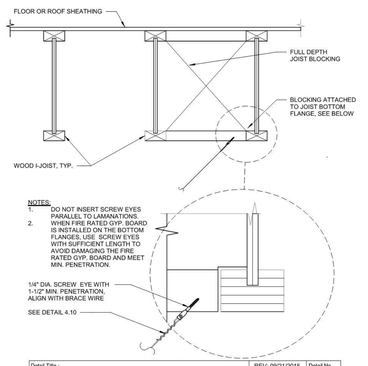

NOTES:
1. DO NOT INSERT SCREW EYES PARALLEL TO LAMANATIONS. WHEN FIRE RATED GYP. BOARD IS INSTALLED ON THE BOTTOM FLANGES, USE SCREW EYES WITH SUFFICIENT LENGTH TO AVOID DAMAGING THE FIRE RATED GYP. BOARD AND MEET MIN. PENETRATION.
2.

Detail Title:	REV: 09/21/2015	Detail No.
BRACE WIRE CONNECTION TO WOOD I-JOIST	REV: 03/2022	4.36

DSA IR 25-2.19 - SHEET 4.36 4.36
12" = 1'-0"

IDENTIFICATION STAMP
DIV. OF THE STATE ARCHITECT
APP: 03-122664 INC:
REVIEWED FOR
SS ☑ FLS ☑ ACS ☑
DATE: 05/12/2023

pjhm architects
LA Office: 837 Traction Avenue, #410, Los Angeles, CA 90013 • LA Phone: 213.278.0172 • Web: pjhm.com
OC Office: 24461 Ridge Route Drive #100, Laguna Hills, CA 92653 • OC Phone: 949.496.6191 • SD Office: 804 Pier View Way #103, Oceanside, CA 92054 • SD Phone: 760.730.5527

LICENSED ARCHITECT
RICHARD W. FRUIN
NO. C15585
REN. 02/25
STATE OF CALIFORNIA

HIGHLAND HIGH SCHOOL
50M POOL & AQUATICS CENTER

KERN HIGH SCHOOL DISTRICT

REFLECTED CEILING PLAN DETAILS

A-4.9

4/13/2023 9:05:07 AM

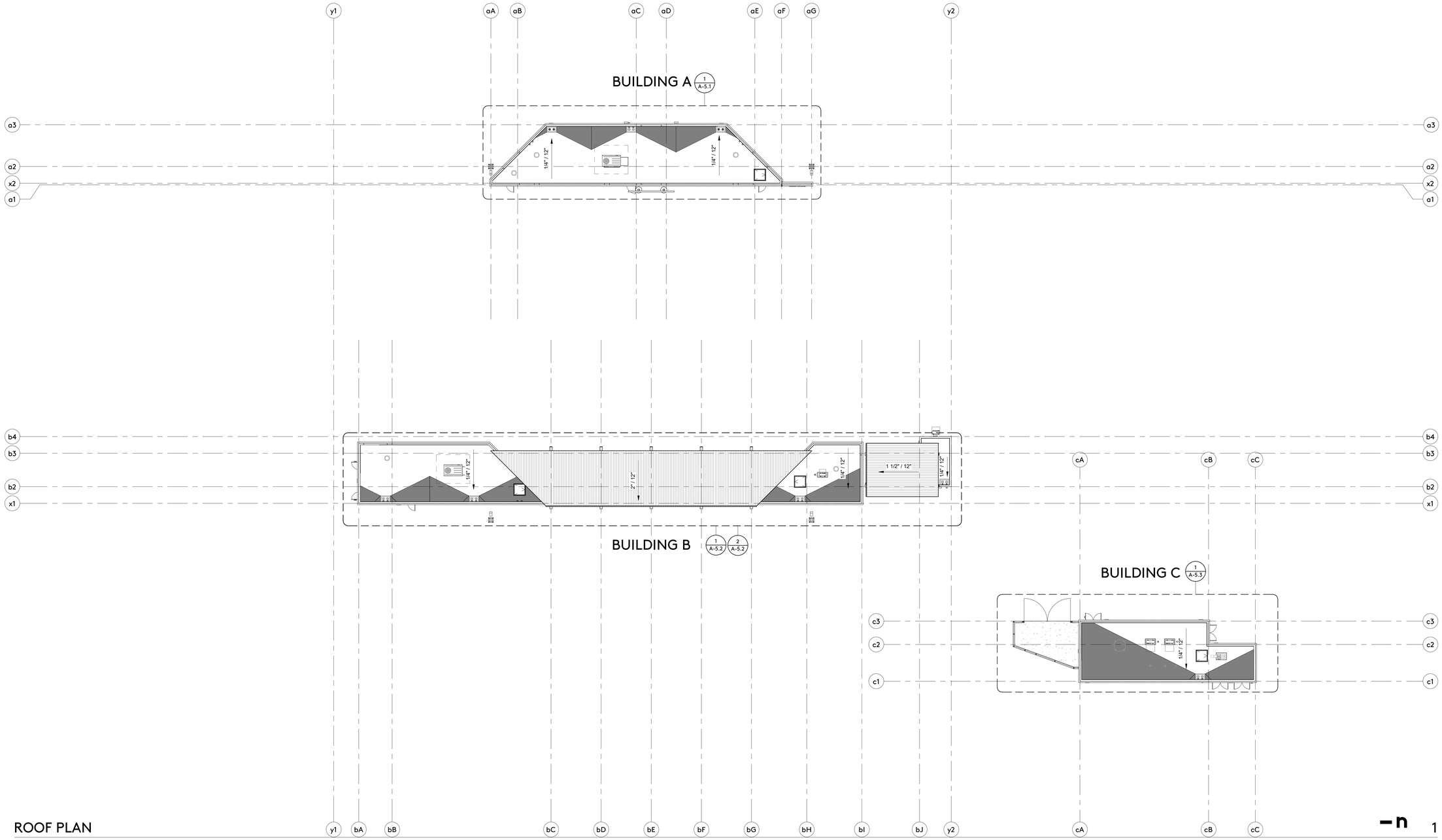

1/16" = 1'-0"

ROOF PLAN

1/8" = 1'-0"

SYMBOLS

THERMOPLASTIC MEMBRANE ROOFING OVER STEEL DECKING MIN. CLASS 'B' ROOF ASSEMBLY — 1 / A-5.4

THERMOPLASTIC MEMBRANE ROOFING OVER WOOD DECKING MIN. CLASS 'B' ROOF ASSEMBLY — 2 / A-5.4

THERMOPLASTIC MEMBRANE ROOFING OVER WOOD DECKING W/ DIRECT ATTACH CEILING MIN. CLASS 'B' ROOF ASSEMBLY — 3 / A-5.4

3:1 TAPERED ROOF BOARD INSULATION ON ROOF WITH 1/2": 1'-0" SLOPE CRICKET VALLEY SLOPE 6/51" / FT.

2:1 TAPERED ROOF BOARD INSULATION ON ROOF WITH 1/2": 1'-0" SLOPE CRICKET VALLEY SLOPE 2/9" / FT.

1:1 TAPERED ROOF BOARD INSULATION ON ROOF WITH 1/4": 1'-0" SLOPE CRICKET VALLEY SLOPE 2/11" / FT.

TYP. — 3 / A-5.9 — 7 / A-5.9

A — BUILDING GRIDLINE

+35'-0" — ELEVATION DATUM ABOVE +0'-0" FINISH FLOOR
T.O.P. = TOP OF PARAPET (STRUCTURAL WALL)
T.O.D. = TOP OF DECK (STRUCTURAL DECKING)
T.O.S. = TOP OF SHEATHING (STRUCTURAL SHEATHING)

PARAPET WALL, WOOD STUD WALL ASSEMBLY

PARAPET WALL, CONCRETE UNIT MASONRY ASSEMBLY (CMU)

6'-0" FOF — BUILDING DIMENSION FACE OF SHEATHING

BUILDING DIMENSION FACE OF FINISH, WHERE OCCURS

6'-0" — BUILDING CENTERLINE DIMENSION

1 / A-1.1 — BUILDING SECTION REFERENCE NUMBER

SHEET REFERENCE NUMBER

SIM — SIMILAR SECTION

1 / A-1.1 — SHEET REFERENCE NUMBER

SIM — SIMILAR SECTION

1 / A-1.1 — DETAIL REFERENCE NUMBER

SHEET REFERENCE NUMBER

4/13/2023 9:05:09 AM

IDENTIFICATION STAMP
DIV. OF THE STATE ARCHITECT
APP: 03-122664 INC:
REVIEWED FOR
SS ☑ FLS ☑ ACS ☑
DATE: 05/12/2023

pjhm architects

LICENSED ARCHITECT
RICHARD W. PRIEBE
NO. C15585
REN. 02/25
STATE OF CALIFORNIA

OC Office: 24461 Ridge Route Drive #100, Laguna Hills, CA 92653 • OC Phone: 949.496.6191 • SD Office: 804 Pier View Way #103, Oceanside, CA 92054 • SD Phone: 760.730.5527 • LA Office: 837 Traction Avenue, #410, Los Angeles, CA 90013 • LA Phone: 213.278.0172 • Web: pjhm.com

HIGHLAND HIGH SCHOOL
50M POOL & AQUATICS CENTER

KERN HIGH SCHOOL DISTRICT

ROOF PLAN - COMPOSITE

A-5.0

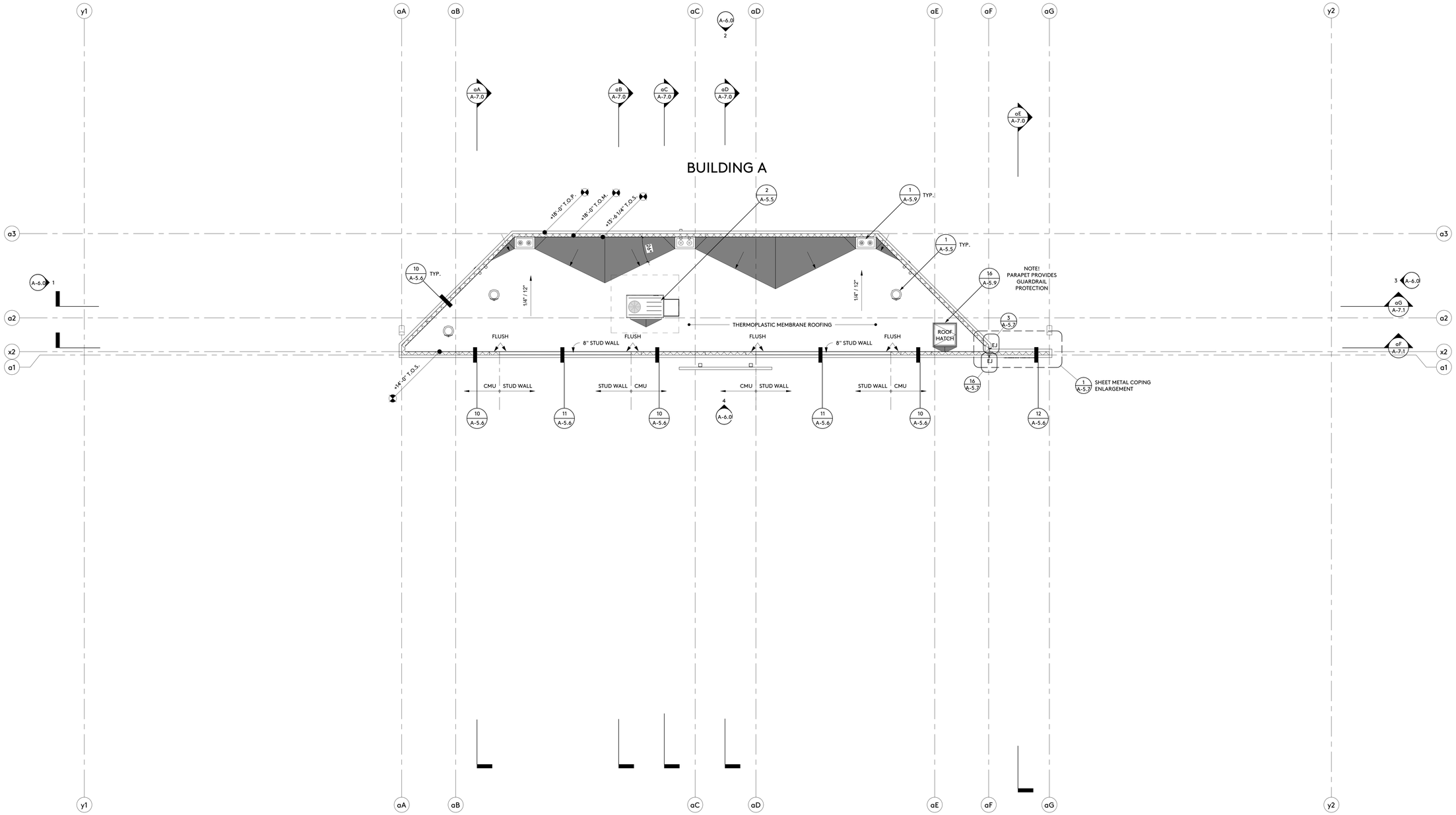

ROOF PLAN

1/8" = 1'-0"

SYMBOLS

THERMOPLASTIC MEMBRANE ROOFING
OVER STEEL DECKING
MIN. CLASS 'B' ROOF ASSEMBLY — 1 / A-5.4

THERMOPLASTIC MEMBRANE ROOFING
OVER WOOD DECKING
MIN. CLASS 'B' ROOF ASSEMBLY — 2 / A-5.4

THERMOPLASTIC MEMBRANE ROOFING
OVER WOOD DECKING W/ DIRECT ATTACH CEILING
MIN. CLASS 'B' ROOF ASSEMBLY — 3 / A-5.4

3:1 TAPERED ROOF BOARD INSULATION
ON ROOF WITH 1/2": 1'-0" SLOPE
CRICKET VALLEY SLOPE 6/51" / FT.

2:1 TAPERED ROOF BOARD INSULATION
ON ROOF WITH 1/2": 1'-0" SLOPE
CRICKET VALLEY SLOPE 2/9" / FT.

1:1 TAPERED ROOF BOARD INSULATION
ON ROOF WITH 1/4": 1'-0" SLOPE
CRICKET VALLEY SLOPE 2/11" / FT.

TYP. — 3 / A-5.9, 7 / A-5.9

A — BUILDING GRIDLINE

+55'-0" — ELEVATION DATUM ABOVE +0'-0" FINISH FLOOR
T.O.P. = TOP OF PARAPET (STRUCTURAL WALL)
T.O.D. = TOP OF DECK (STRUCTURAL DECKING)
T.O.S. = TOP OF SHEATHING (STRUCTURAL SHEATHING)

PARAPET WALL, WOOD STUD WALL ASSEMBLY

PARAPET WALL, CONCRETE UNIT MASONRY ASSEMBLY (CMU)

6'-0" FOF — BUILDING DIMENSION FACE OF SHEATHING
BUILDING DIMENSION FACE OF FINISH, WHERE OCCURS

6'-0" — BUILDING CENTERLINE DIMENSION

1 / A-1.1 SIM — BUILDING SECTION REFERENCE NUMBER
SHEET REFERENCE NUMBER
SIMILAR SECTION

1 / A-1.1 SIM — SHEET REFERENCE NUMBER
SIMILAR SECTION

1 / A-1.1 — DETAIL REFERENCE NUMBER
SHEET REFERENCE NUMBER

4/13/2023 11:26:58 AM

IDENTIFICATION STAMP
DIV. OF THE STATE ARCHITECT
APP: 03-122664 INC:
REVIEWED FOR
SS ☑ FLS ☑ ACS ☑
DATE: 05/12/2023

pjhm architects

LICENSED ARCHITECT
EDWARD W. PJHM
NO. C15585
REN. 02/25
STATE OF CALIFORNIA

OC Office: 24461 Ridge Route Drive #100, Laguna Hills, CA 92653 • SD Phone: 760.730.5527 • LA Office: 837 Traction Avenue, #410, Los Angeles, CA 90013 • LA Phone: 213.278.0172 • Web: pjhm.com

HIGHLAND HIGH SCHOOL
50M POOL & AQUATICS CENTER

KERN HIGH SCHOOL DISTRICT

ROOF PLAN

A-5.1

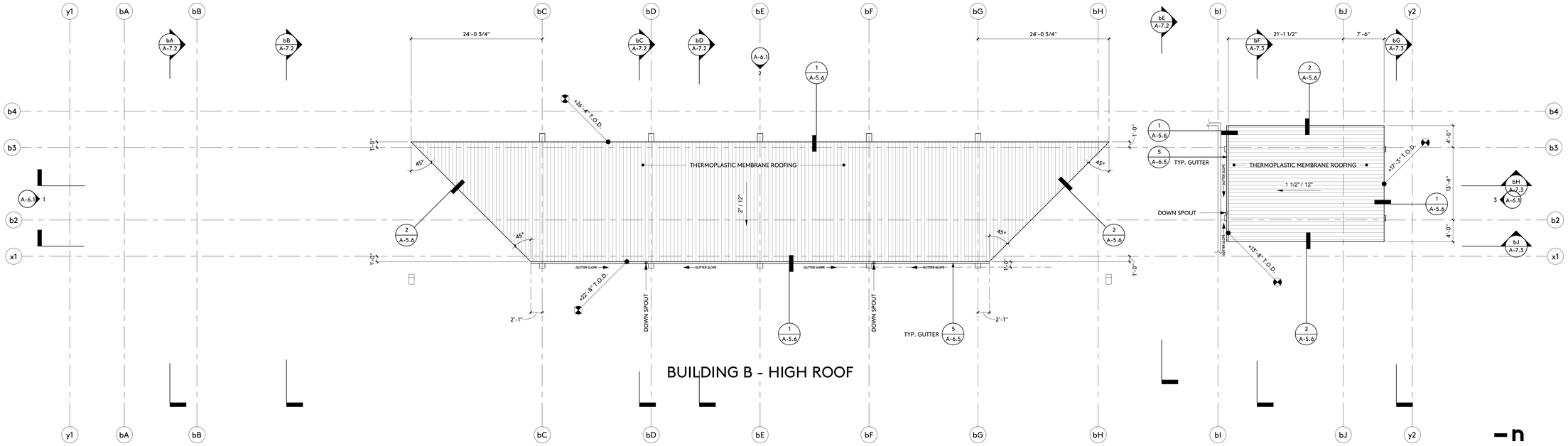

BUILDING B - HIGH ROOF

ROOF PLAN 1

1/8" = 1'-0"

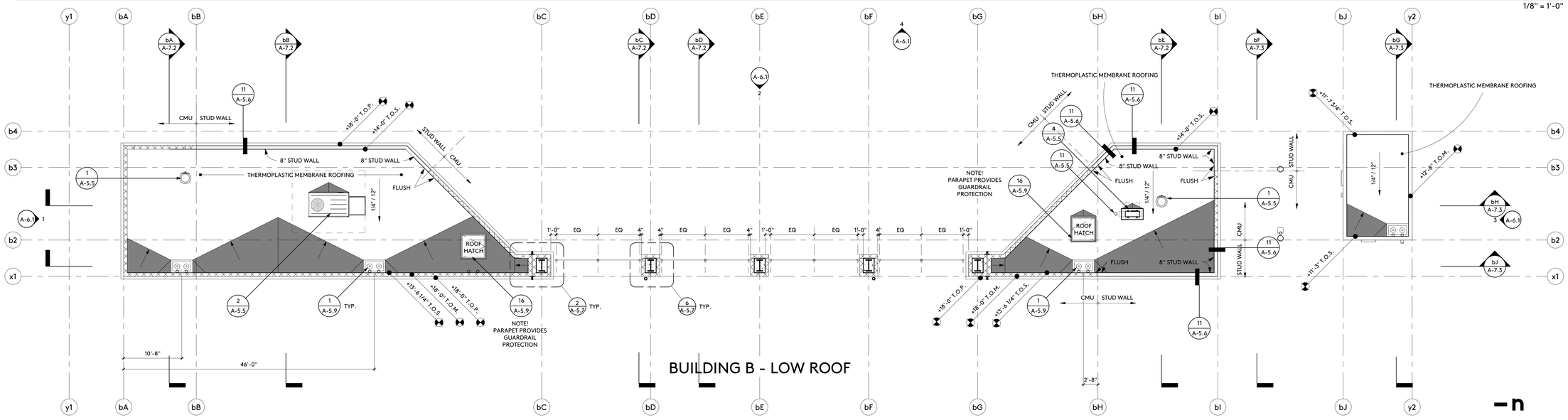

BUILDING B - LOW ROOF

ROOF PLAN 2

1/8" = 1'-0"

SYMBOLS

- THERMOPLASTIC MEMBRANE ROOFING OVER STEEL DECKING MIN. CLASS 'B' ROOF ASSEMBLY — 1 / A-5.4
- THERMOPLASTIC MEMBRANE ROOFING OVER WOOD DECKING MIN. CLASS 'B' ROOF ASSEMBLY — 2 / A-5.4
- THERMOPLASTIC MEMBRANE ROOFING OVER WOOD DECKING W/ DIRECT ATTACH CEILING MIN. CLASS 'B' ROOF ASSEMBLY — 3 / A-5.4
- 3:1 TAPERED ROOF BOARD INSULATION ON ROOF WITH 1/2": 1'-0" SLOPE CRICKET VALLEY SLOPE 6/51" / FT.
- 2:1 TAPERED ROOF BOARD INSULATION ON ROOF WITH 1/2": 1'-0" SLOPE CRICKET VALLEY SLOPE 2/9" / FT.
- 1:1 TAPERED ROOF BOARD INSULATION ON ROOF WITH 1/4": 1'-0" SLOPE CRICKET VALLEY SLOPE 2/11" / FT.
- TYP. — 3 / A-5.9, 7 / A-5.9
- BUILDING GRIDLINE — A
- ELEVATION DATUM ABOVE +0'-0" FINISH FLOOR (+35'-0")
  T.O.P. = TOP OF PARAPET (STRUCTURAL WALL)
  T.O.D. = TOP OF DECK (STRUCTURAL DECKING)
  T.O.S. = TOP OF SHEATHING (STRUCTURAL SHEATHING)
- PARAPET WALL, WOOD STUD WALL ASSEMBLY
- PARAPET WALL, CONCRETE UNIT MASONRY ASSEMBLY (CMU)
- 6'-0" FOF — BUILDING DIMENSION FACE OF SHEATHING
- BUILDING DIMENSION FACE OF FINISH, WHERE OCCURS
- 6'-0" — BUILDING CENTERLINE DIMENSION
- 1 / A-1.1 SIM — BUILDING SECTION REFERENCE NUMBER; SHEET REFERENCE NUMBER; SIMILAR SECTION
- 1 / A-1.1 SIM — SHEET REFERENCE NUMBER; SIMILAR SECTION
- 1 / A-1.1 — DETAIL REFERENCE NUMBER; SHEET REFERENCE NUMBER

SYMBOLS

4/13/2023 11:26:59 AM

IDENTIFICATION STAMP
DIV. OF THE STATE ARCHITECT
APP: 03-122664 INC:
REVIEWED FOR
SS ☑ FLS ☑ ACS ☑
DATE: 05/12/2023

pjhm architects

LICENSED ARCHITECT
EDWARD W. PJHM
NO. C15585
REN. 02/25
STATE OF CALIFORNIA

SD Phone: 760.730.5527 • LA Office: 837 Traction Avenue, #410, Los Angeles, CA 90013 • LA Phone: 213.278.0172 • Web: pjhm.com
OC Office: 24461 Ridge Route Drive #100, Laguna Hills, CA 92653 • OC Phone: 949.496.6191 • SD Office: 804 Pier View Way #103, Oceanside, CA 92054 • SD Phone:

HIGHLAND HIGH SCHOOL
50M POOL & AQUATICS CENTER

KERN HIGH SCHOOL DISTRICT

ROOF PLAN

A-5.2

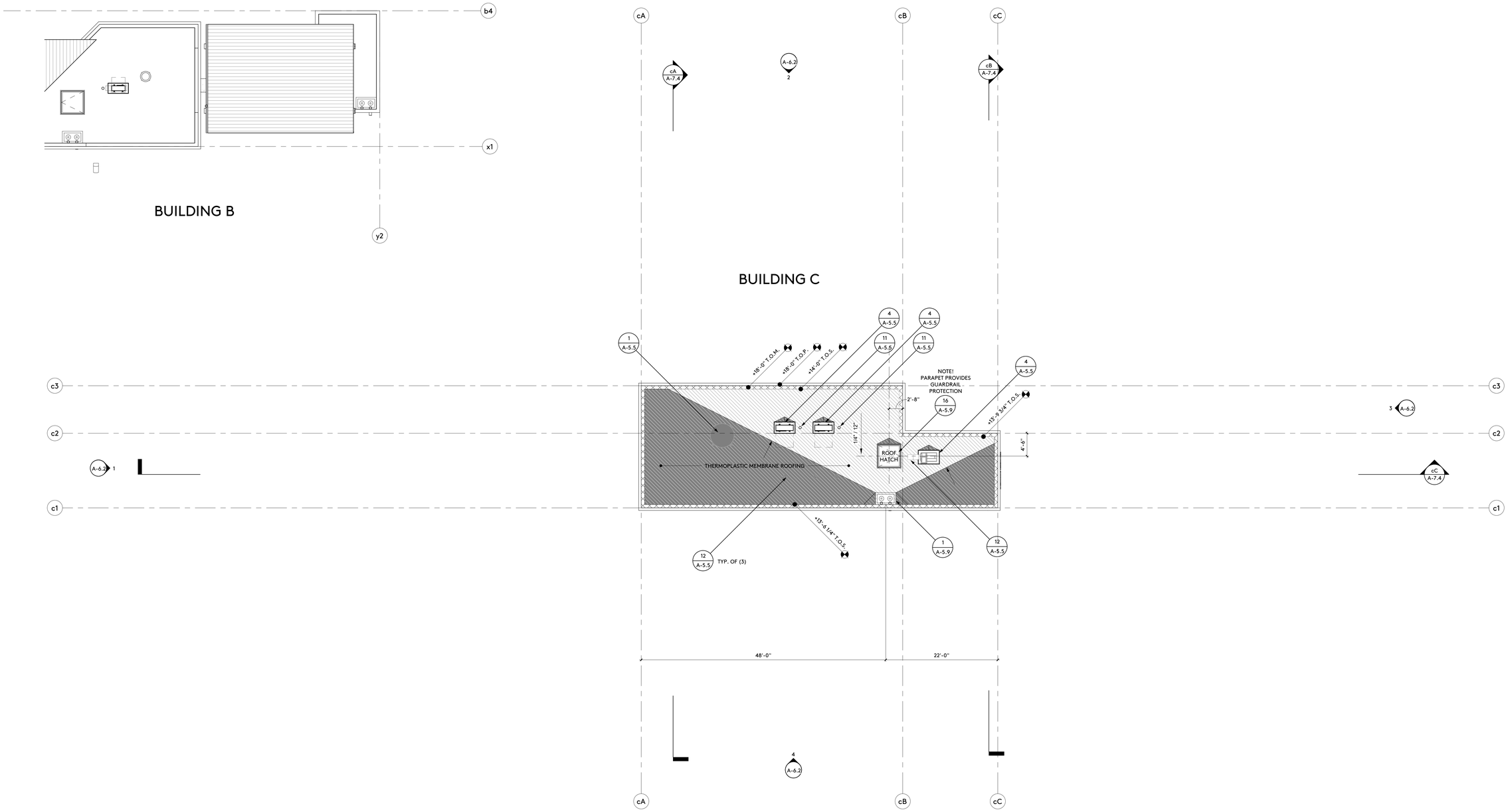

ROOF PLAN

1

1/8" = 1'-0"

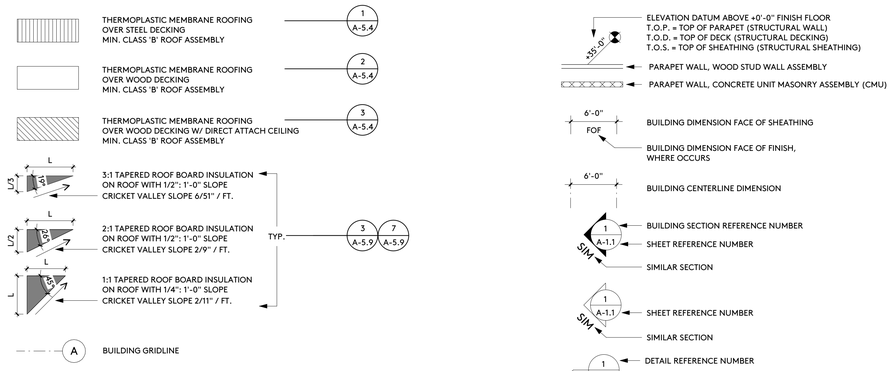

SYMBOLS

IDENTIFICATION STAMP
DIV. OF THE STATE ARCHITECT
APP: 03-122664 INC:
REVIEWED FOR
SS ☑ FLS ☑ ACS ☑
DATE: 05/12/2023

pjhm architects

LICENSED ARCHITECT
THOMAS W. KRUSE
NO. C15585
REN. 02/25
STATE OF CALIFORNIA

HIGHLAND HIGH SCHOOL
50M POOL & AQUATICS CENTER

KERN HIGH SCHOOL DISTRICT

ROOF PLAN

A-5.3

OC Office: 24461 Ridge Route Drive #100, Laguna Hills, CA 92653 • OC Phone: 949.496.6191 • SD Office: 804 Pier View Way #103, Oceanside, CA 92054 • SD Phone: 760.730.5527 • LA Office: 837 Traction Avenue, #410, Los Angeles, CA 90013 • LA Phone: 213.278.0172 • Web: pjhm.com

4/13/2023 11:27:00 AM

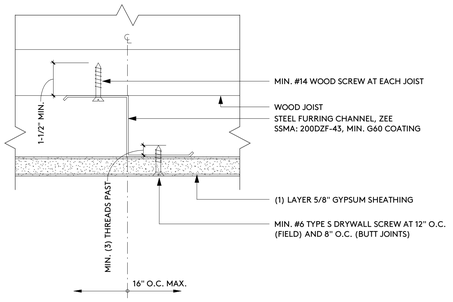

ANCHORAGE - FURRING CHANNEL 13

6" = 1'-0"

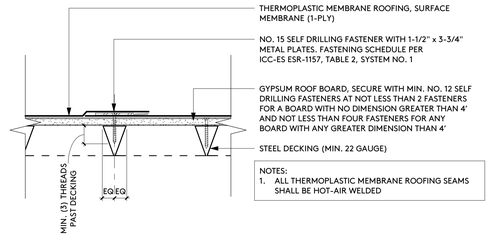

ANCHORAGE - STEEL DECKING 9

3" = 1'-0"

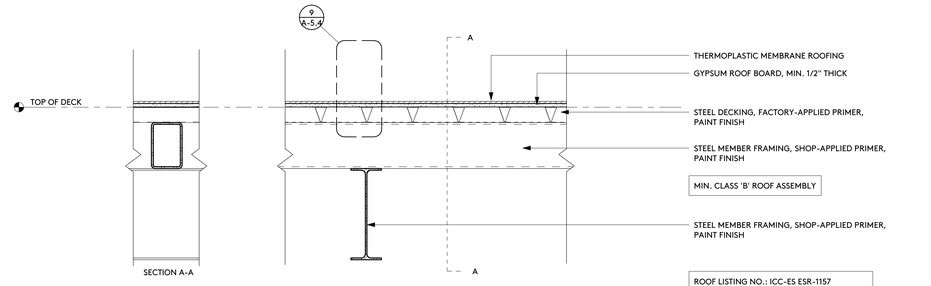

ASSEMBLY - TYP. ROOF AT STEEL DECKING 1

1 1/2" = 1'-0"

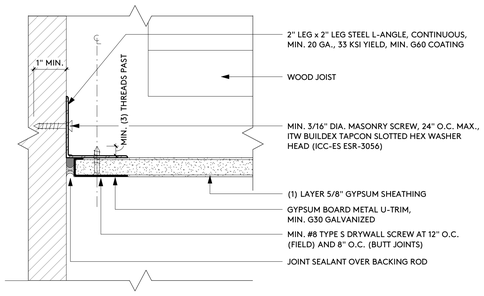

ANCHORAGE - FURRING CHANNEL 14

6" = 1'-0"

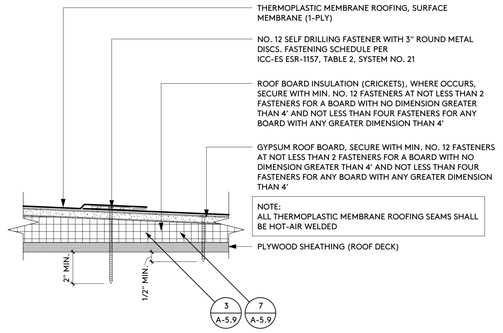

ANCHORAGE - WOOD DECKING 10

3" = 1'-0"

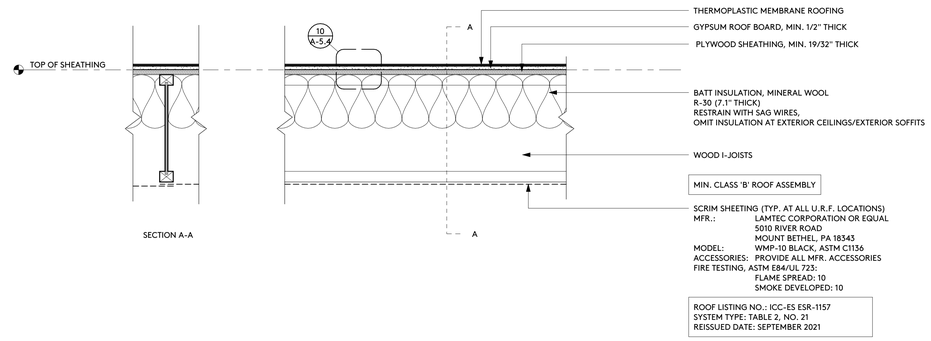

ASSEMBLY - TYP. ROOF AT WOOD DECKING 2

1 1/2" = 1'-0"

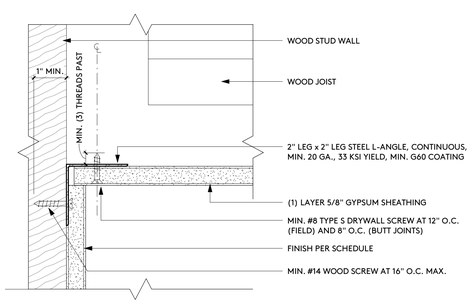

ANCHORAGE - FURRING CHANNEL 15

6" = 1'-0"

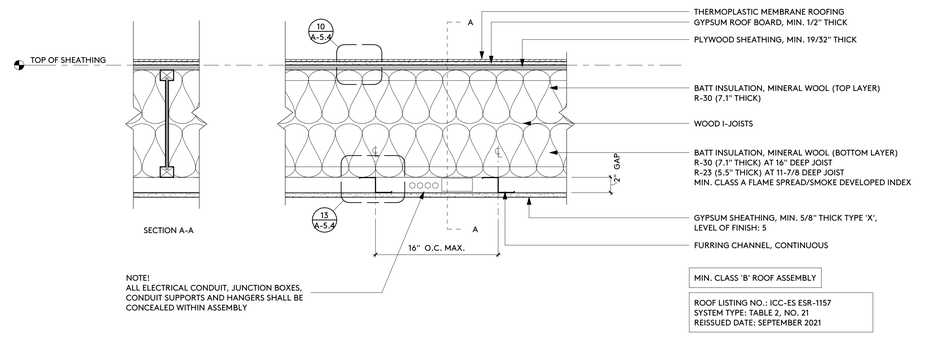

ASSEMBLY - TYP. ROOF AT WOOD DECKING 3

1 1/2" = 1'-0"

IDENTIFICATION STAMP
DIV. OF THE STATE ARCHITECT
APP: 03-122664 INC:
REVIEWED FOR
SS ☑ FLS ☑ ACS ☑
DATE: 05/12/2023

pjhm architects
LICENSED ARCHITECT
RICHARD W. PRIMUS
NO. C15585
REN. 02/25
STATE OF CALIFORNIA
SD Phone: 760.730.5527 • LA Office: 837 Traction Avenue, #410, Los Angeles, CA 90013 • LA Phone: 213.278.0172 • Web: pjhm.com
OC Office: 24461 Ridge Route Drive #100, Laguna Hills, CA 92653 • OC Phone: 949.496.6191 • SD Office: 804 Pier View Way #103, Oceanside, CA 92054

HIGHLAND HIGH SCHOOL
50M POOL & AQUATICS CENTER

KERN HIGH SCHOOL DISTRICT

ROOF PLAN DETAILS

A-5.4

4/13/2023 9:05:13 AM

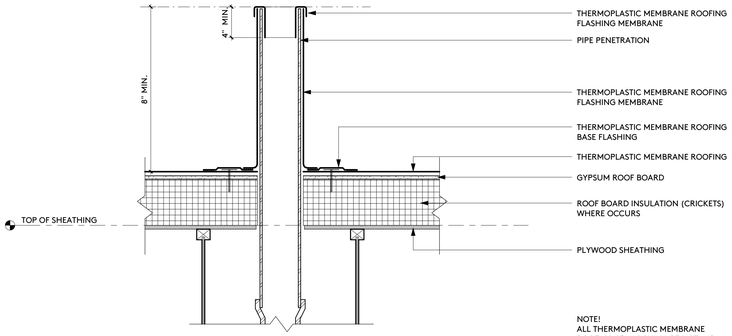

DECK PENETRATION - PIPE 9

1 1/2" = 1'-0"

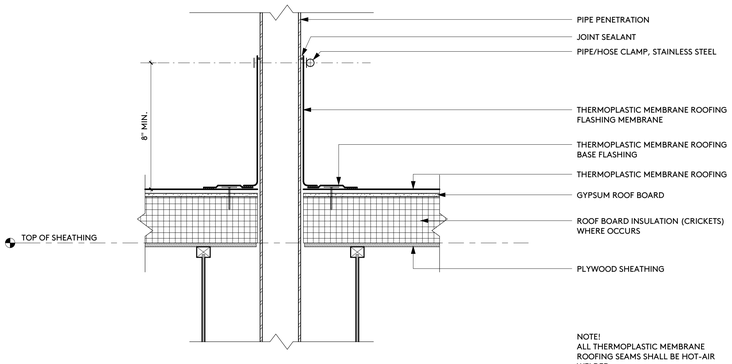

DECK PENETRATION - PIPE 10

1 1/2" = 1'-0"

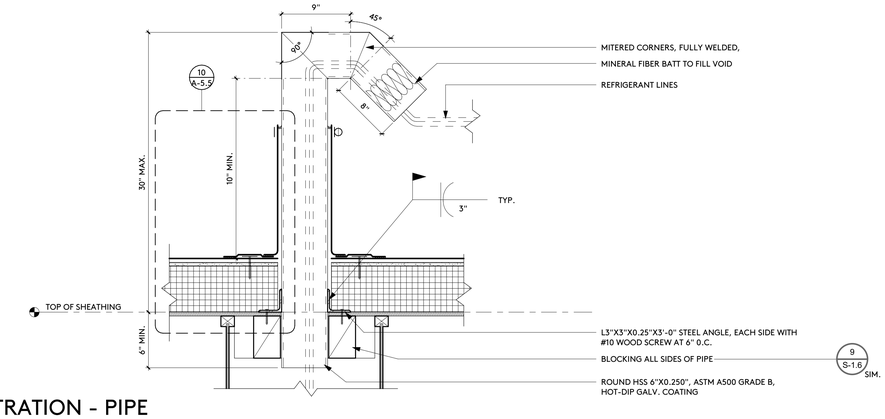

DECK PENETRATION - PIPE 11

1 1/2" = 1'-0"

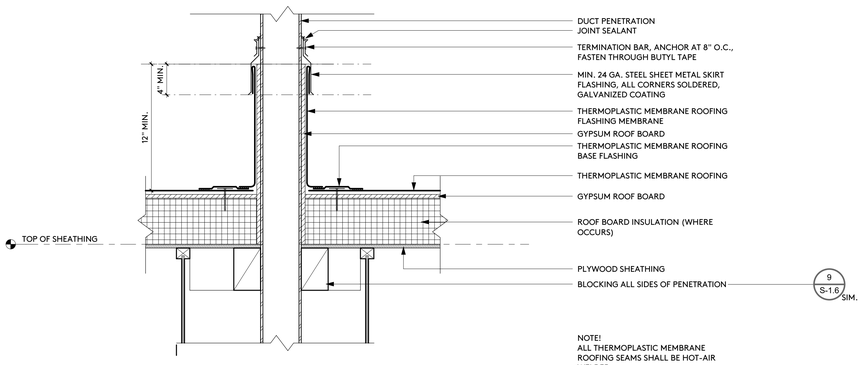

DECK PENETRATION - DUCT 12

1 1/2" = 1'-0"

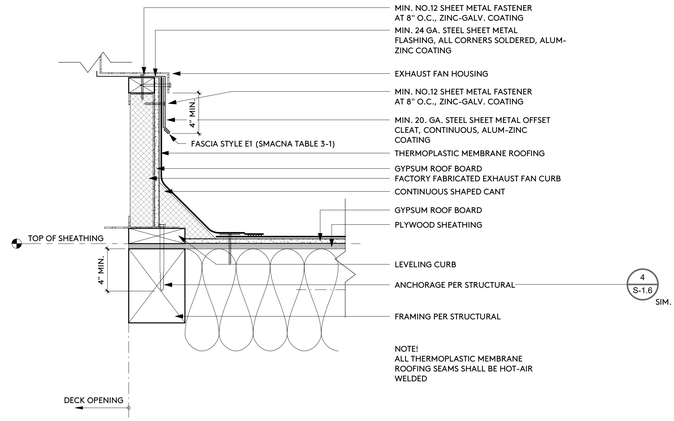

CURB - EXHAUST FAN 1

2" = 1'-0"

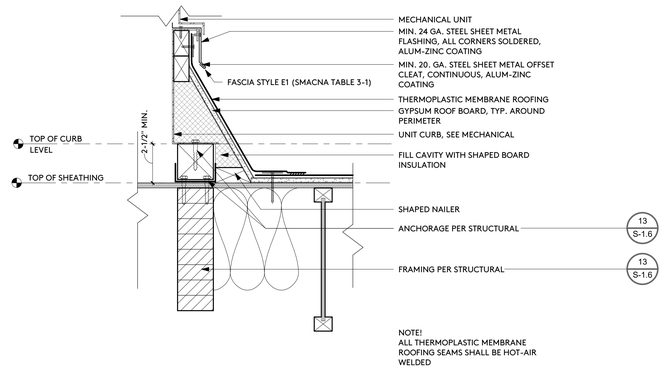

CURB - HVAC UNIT 2

2" = 1'-0"

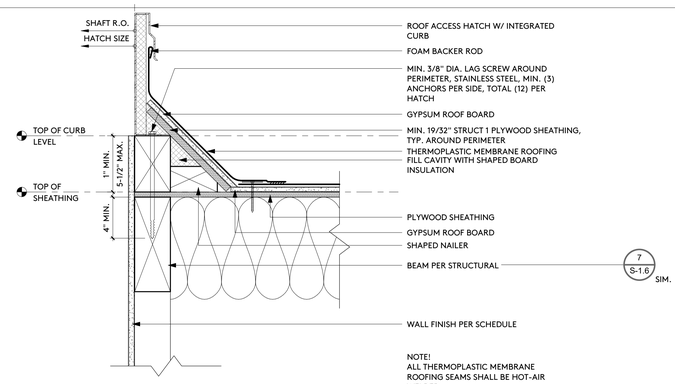

CURB - ROOF ACCESS HATCH 3

2" = 1'-0"

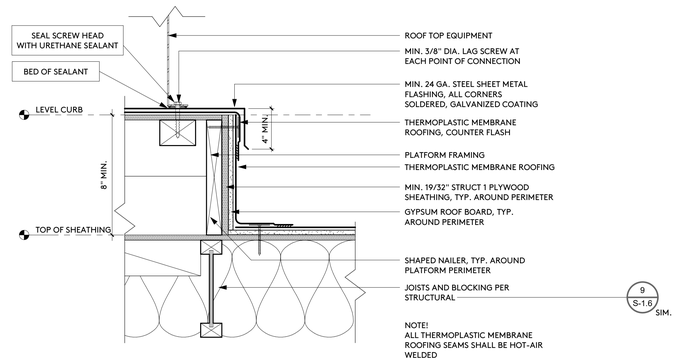

CURB - ROOF MOUNTED EQUIPMENT 4

2" = 1'-0"

IDENTIFICATION STAMP
DIV. OF THE STATE ARCHITECT
APP: 03-122664 INC:
REVIEWED FOR
SS ☑ FLS ☑ ACS ☑
DATE: 05/12/2023

pjhm architects
LICENSED ARCHITECT
RICHARD W. PRIEST
NO. C15585
REN. 02/25
STATE OF CALIFORNIA

HIGHLAND HIGH SCHOOL
50M POOL & AQUATICS CENTER

KERN HIGH SCHOOL DISTRICT

ROOF PLAN DETAILS

A-5.5

OC Office: 24461 Ridge Route Drive #100, Laguna Hills, CA 92653 • OC Phone: 949.496.6191 • SD Office: 804 Pier View Way #103, Oceanside, CA 92054 • SD Phone: 760.730.5527 • LA Office: 837 Traction Avenue, #410, Los Angeles, CA 90013 • LA Phone: 213.278.0172 • Web: pjhm.com

4/13/2023 9:05:13 AM

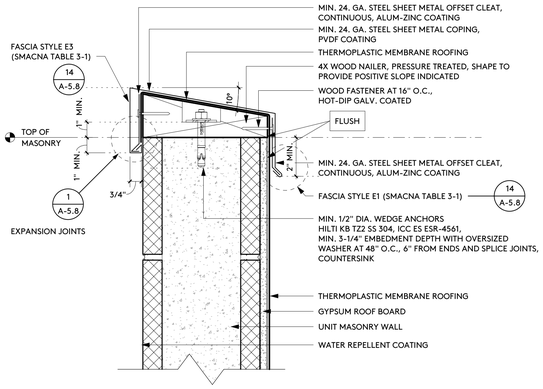

PARAPET TERMINATION 13

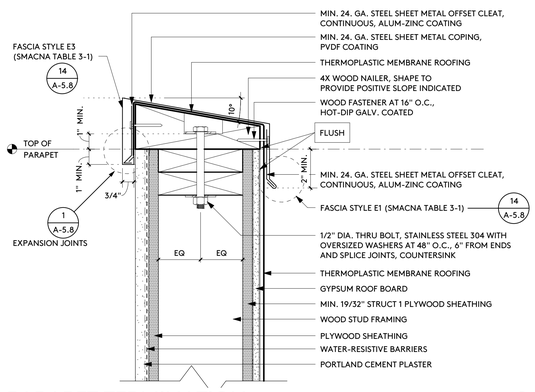

PARAPET TERMINATION 9

3" = 1'-0"

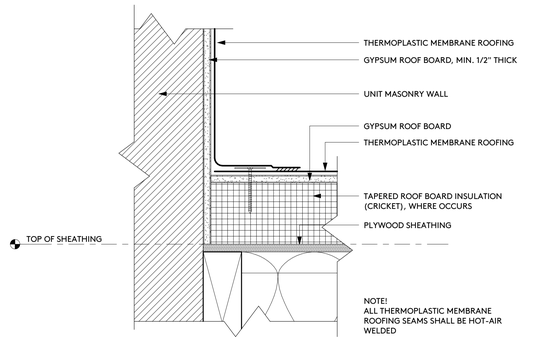

ROOF TRANSITION 5

3" = 1'-0"

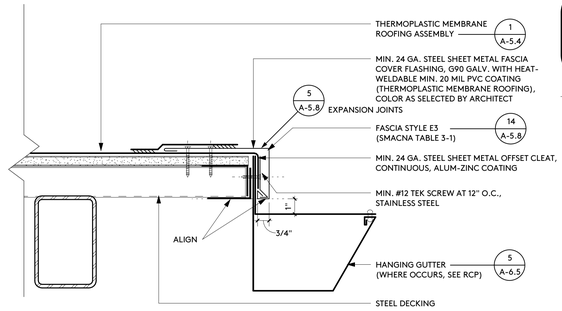

TERMINATION AT EAVE 1

3" = 1'-0"

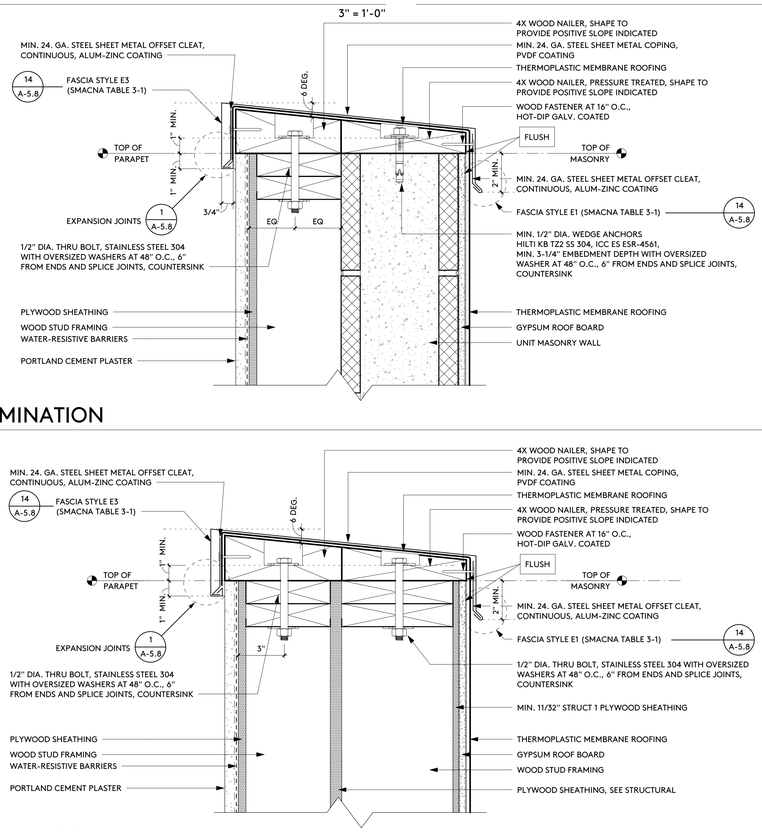

PARAPET TERMINATION 10

3" = 1'-0"

PARAPET TERMINATION 11

3" = 1'-0"

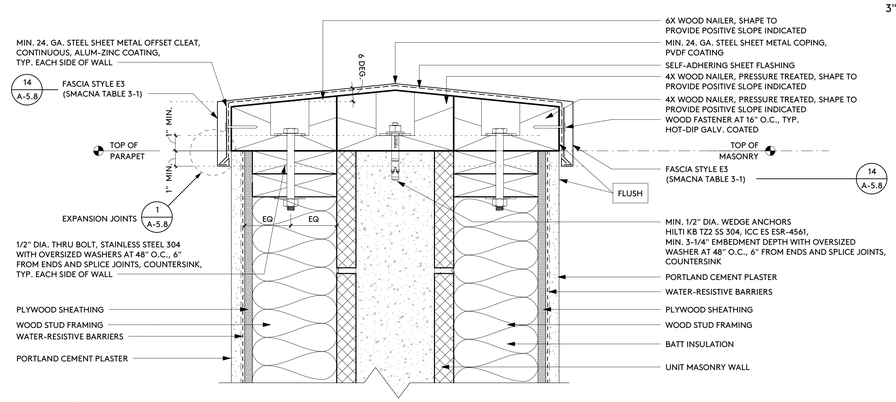

PARAPET TERMINATION 12

3" = 1'-0"

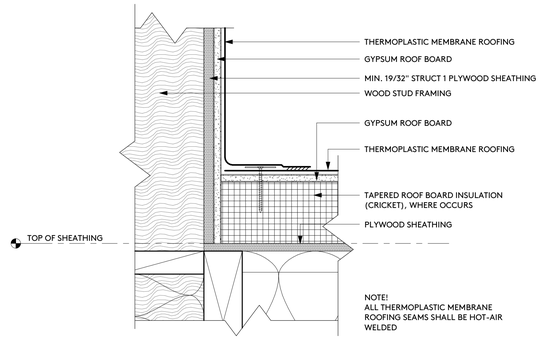

ROOF TRANSITION 6

3" = 1'-0"

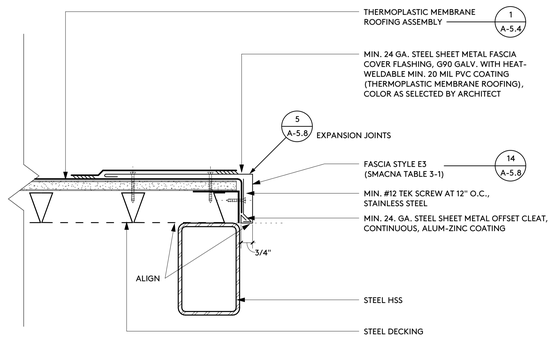

TERMINATION AT RAKE 2

3" = 1'-0"

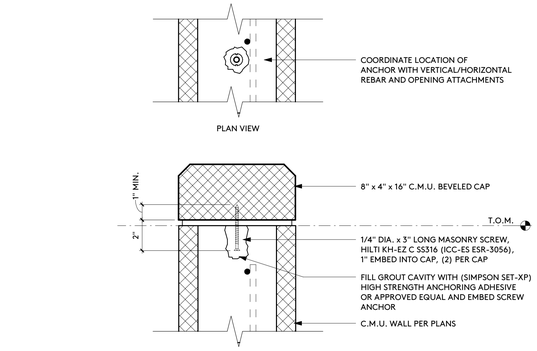

C.M.U. WALL CAP ANCHORAGE 7

3" = 1'-0"

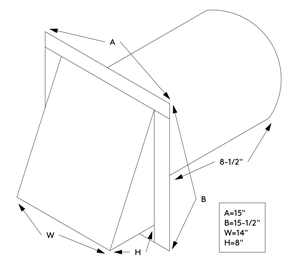

HOODED WALL VENT WITH SCREEN, MIN. 0.050 CONT. ALUMINUM SHEET METAL, PVDF COATED, WITH 1/4" INSECT SCREEN

WALL VENT 8

1 1/2" = 1'-0"

IDENTIFICATION STAMP
DIV. OF THE STATE ARCHITECT
APP: 03-122664 INC:
REVIEWED FOR
SS ☑ FLS ☑ ACS ☑
DATE: 05/12/2023

pjhm architects
LA Phone: 213.278.0172 • Web: pjhm.com
LA Office: 837 Traction Avenue, #410, Los Angeles, CA 90013 • SD Phone: 760.730.5527 • OC Office: 24461 Ridge Route Drive #100, Laguna Hills, CA 92653 • OC Phone: 949.496.6191 • SD Office: 804 Pier View Way #103, Oceanside, CA 92054

LICENSED ARCHITECT
EDWARD W. FRIEDMAN
NO. C15585
REN. 02/25
STATE OF CALIFORNIA

HIGHLAND HIGH SCHOOL
50M POOL & AQUATICS CENTER

KERN HIGH SCHOOL DISTRICT

ROOF PLAN DETAILS

A-5.6

4/13/2023 9:05:14 AM

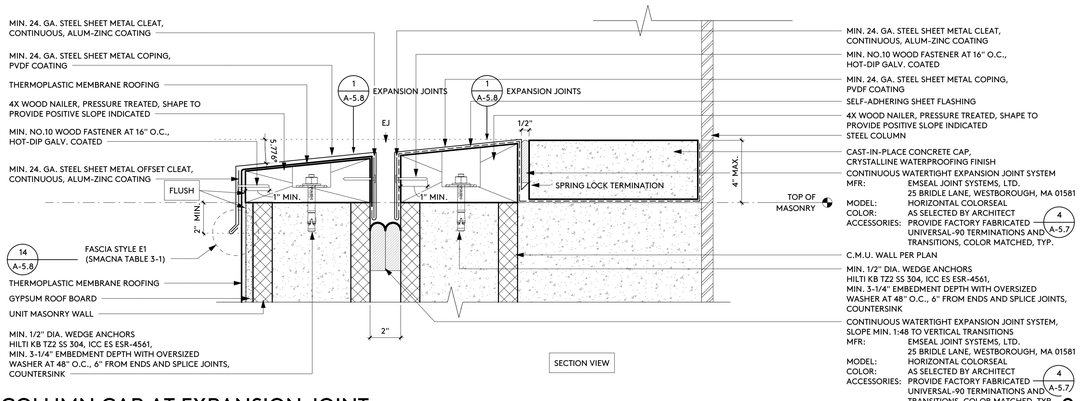

COLUMN CAP AT EXPANSION JOINT 9

3" = 1'-0"

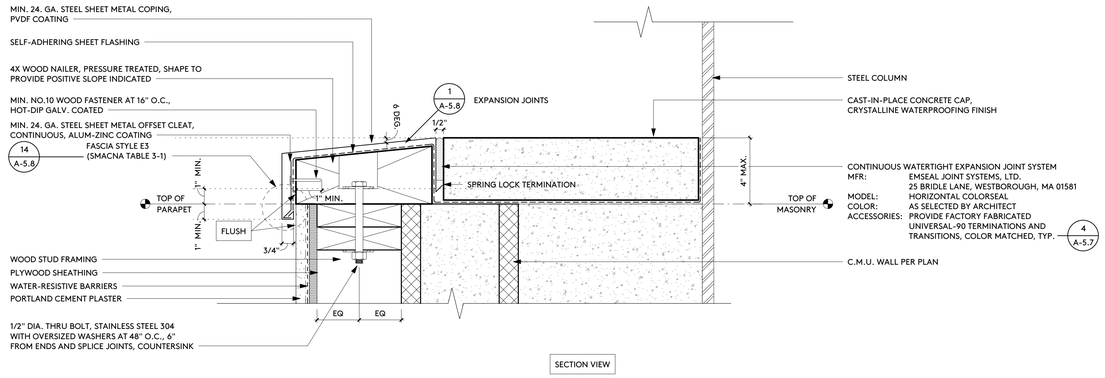

COLUMN CAP 10

3" = 1'-0"

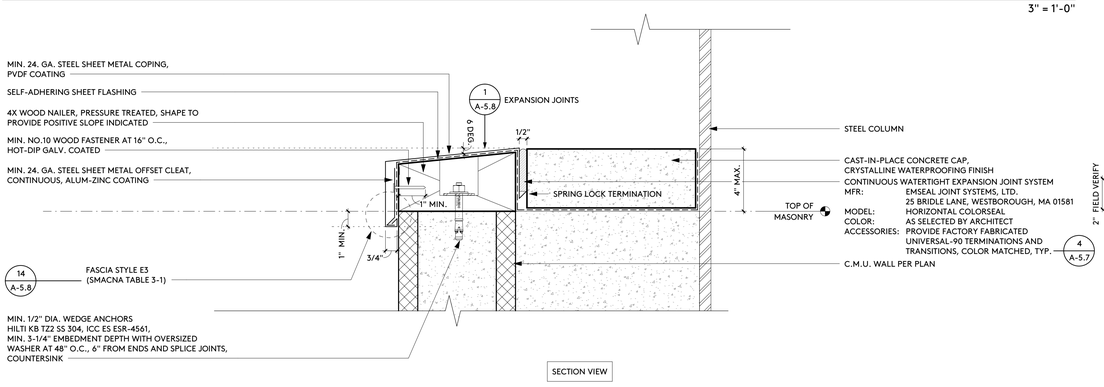

COLUMN CAP 11

3" = 1'-0"

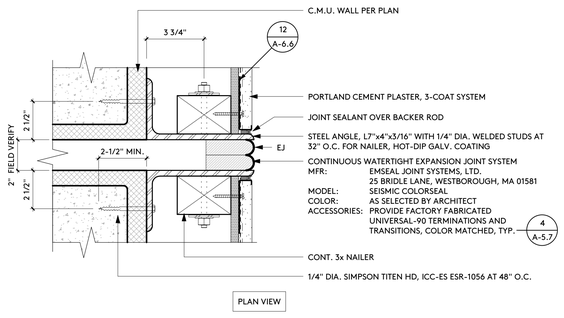

EXPANSION JOINT 16

3" = 1'-0"

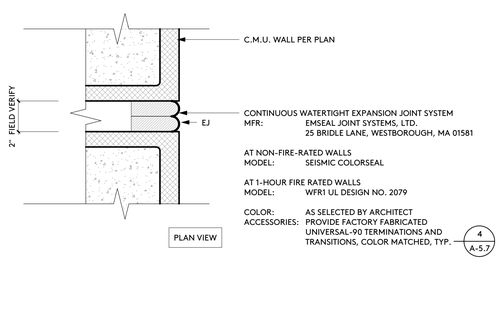

EXPANSION JOINT 12

3" = 1'-0"

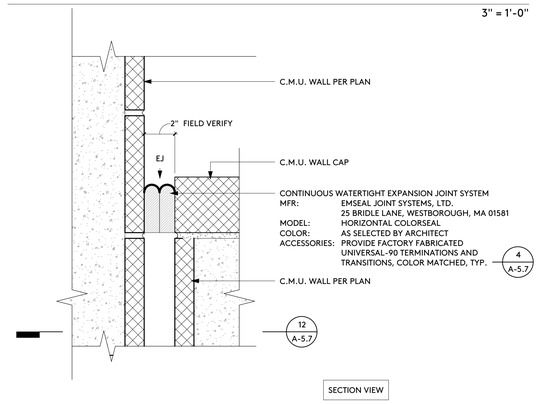

EXPANSION JOINT 8

3" = 1'-0"

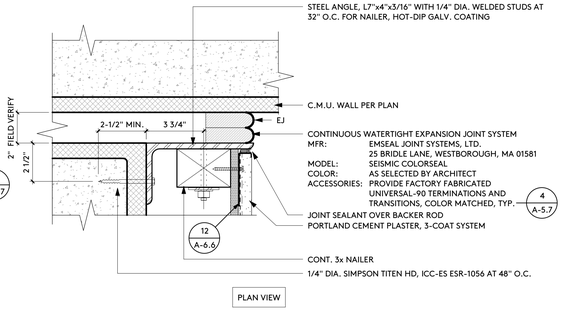

EXPANSION JOINT 7

3" = 1'-0"

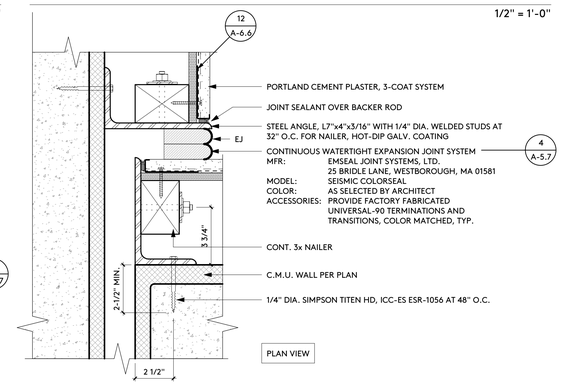

EXPANSION JOINT 3

3" = 1'-0"

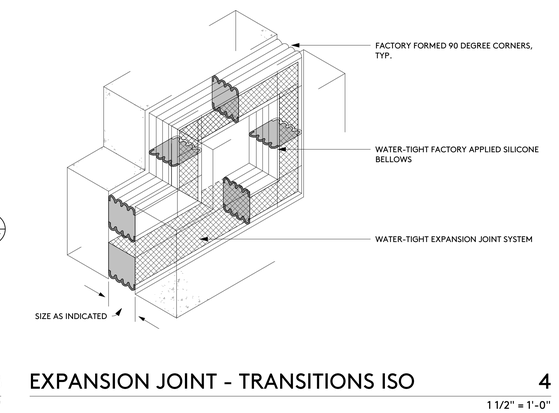

EXPANSION JOINT - TRANSITIONS ISO 4

1 1/2" = 1'-0"

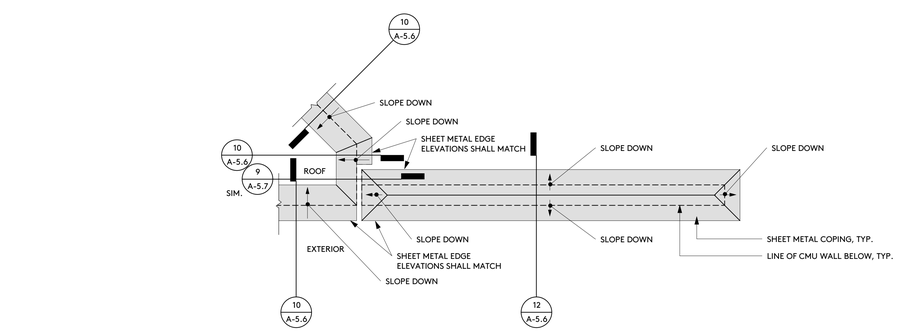

PARAPET COPING 1

1/2" = 1'-0"

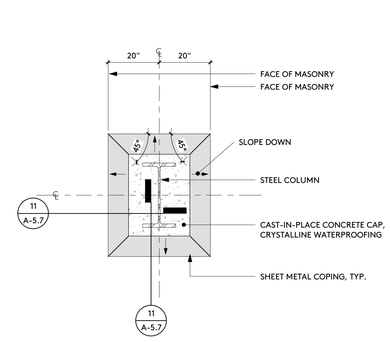

ROOF TRANSITION 6

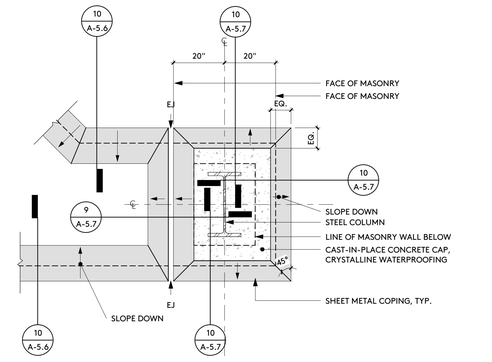

ROOF TRANSITION 2

pjhm architects
Web: pjhm.com
LA Phone: 213.278.0172 • LA Office: 837 Traction Avenue, #410, Los Angeles, CA 90013
SD Phone: 760.730.5527 • SD Office: 804 Pier View Way #103, Oceanside, CA 92054
OC Phone: 949.496.6191 • OC Office: 24461 Ridge Route Drive #100, Laguna Hills, CA 92653

IDENTIFICATION STAMP
DIV. OF THE STATE ARCHITECT
APP: 03-122664 INC:
REVIEWED FOR
SS ☑ FLS ☑ ACS ☑
DATE: 05/12/2023

LICENSED ARCHITECT
EDWARD W. FRIEND
NO. C15585
REN. 02/25
STATE OF CALIFORNIA

HIGHLAND HIGH SCHOOL
50M POOL & AQUATICS CENTER

KERN HIGH SCHOOL DISTRICT

ROOF PLAN DETAILS

A-5.7

4/13/2023 9:05:16 AM

Metal Thickness (Nom.)				Joint (J) for Top Width (W_T)				Joint (J) for Interior / Exterior Fascia Dimension	
S/S gage (mm)	Al in. (mm)	Cu oz. (mm)	Steel* gage (mm)	6" Max. (150 mm)	Over 6" to 12" (300 mm)	Over 12" to 18" (450 mm)	Over 18" (460 mm)	9" Max. (230 mm)	Over 9" to 12" (300 mm)
28 (.38)	.025 (.64)	12 (.41)	26 (.55)	ALL	ALL	NONE	NONE	ALL	8–12
26 (.46)	.032 (.81)	16 (.55)	24 (.70)	ALL	ALL	5–12	8–11	ALL	8–12
24 (.58)	.040 (1.0)	20 (.69)	22 (.85)	ALL	ALL	5–12	5–9,12	ALL	8–12
22 (.74)	.063 (1.6)	24 (.82)	20 (1.0)	1–10,12	1–10,12	1–10,12	5–9,12	1–7,9,11,11A,12	1–7,9–12
20 (.89)	.080 (2.0)	32 (.92)	18 (1.3)	1–7,12	1–7,12	1–7,12	5–7,12	1–7,11A,12	1–7, 10–12
18 (1.2)	.100 (2.5)	48 (1.6)	16 (1.6)	1–7,12	1–7,12	1–7,12	5–7,12	1–7,11A,12	1–7, 10–12
16 (1.5)	.125 (3.2)		14 (2.0)	2,4,5,12	2,4,5,12	2,4,5,12	5–7,12	2, 4, 5, 11A, 12	2, 4, 5, 12
.075 (1.9)			12 (2.8)	2,4,12	2,4,12	2,4,12	5–7,12	2, 4, 5, 11A, 12	2, 3, 5, 12
.105 (2.7)			10 (3.5)	2,4,12	2,4,12	2,4,12	5–7,12	2, 4, 5, 11A, 12	2, 4, 5, 12

*Galvanized or coated 1" = 25 mm

J1	J2	J3	J4	J5	J6
	6"		6"		¾
3" LAP	BUTT + BACK-UP PLATE	4" JOGGLE (OFF-SET FLUSH)	BUTT + COVER PLATE	6" COVER + 6" BACKUP PLATES	T & G

J7	J8	J9	J10	J11	J11A	J12
¾"						¾*
T & G FLUSH	STDG SEAM	1" DRIVE	¾" HOOK SEAM	¾" INSIDE SLIP (POCKET)	¾" S SLIP	DBL S

Table 3–1 Coping Design

NOTE:

Some cover plates slips and drives maybe fabricated with thickness lighter than the base coping material used. (J_2, J_4, J_5, J_6, J_7, J_9, J_{11A}, J_{12})

SMACNA TABLE 3-1 — 14

12" = 1'-0"

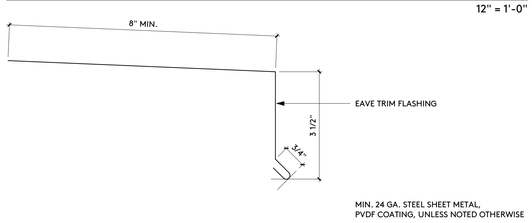

PROFILE - EAVE TRIM FLASHING — 15

6" = 1'-0"

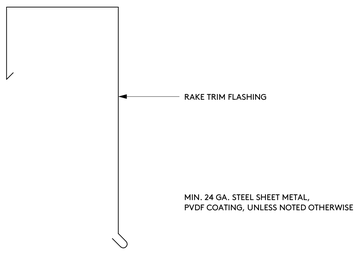

PROFILE - RAKE TRIM FLASHING — 16A

6" = 1'-0"

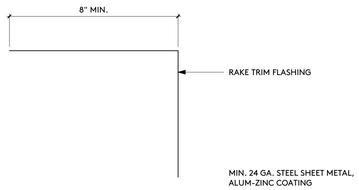

PROFILE - RAKE TRIM FLASHING — 16B

6" = 1'-0"

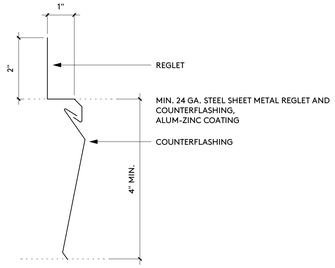

PROFILE - REGLET W/ COUNTERFLASHING — 9

6" = 1'-0"

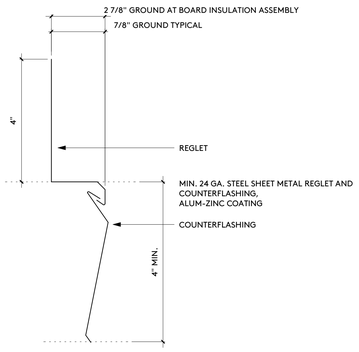

PROFILE - REGLET W/ COUNTERFLASHING — 10

6" = 1'-0"

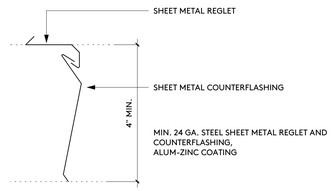

PROFILE - REGLET W/ COUNTERFLASHING — 11

6" = 1'-0"

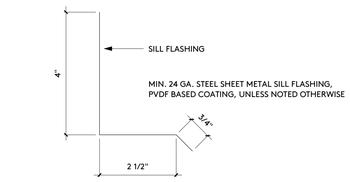

PROFILE - SILL FLASHING — 12

6" = 1'-0"

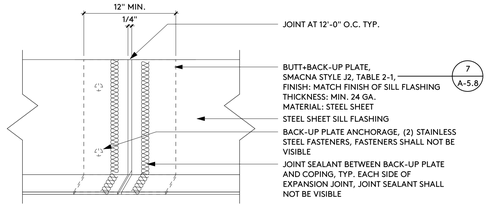

SILL FLASHING EXPANSION JOINTS — 5

3" = 1'-0"

Metal Thickness (Nom.)					Joint (J) for Fascia Dimension of:	
Ss ga (mm)	Al in. (mm)	Cu oz. (mm)	Steel* ga (mm)		9" Max. (230 mm)	Over 9" to 12" (300 mm)
28 (0.38)	0.025 (.64)	12 (0.41)	26 (0.55)		J 1, 2, 4, 5, 9, 11, 11A, 12	J 8–12
26 (0.46)	0.032 (.81)	16 (0.55)	24 (0.70)		J 1, 2, 4, 5, 9, 11, 11A, 12	J 8–12
24 (0.58)	0.040 (1.0)	20 (0.69)	22 (0.85)		J 1, 2, 4, 5, 9, 11, 11A, 12	J 8–12
22 (0.74)	0.063 (1.6)	24 (0.82)	20 (1.0)		J 1, 2, 4, 5, 9, 11A, 12	J 1–11, 11A, 12
20 (0.89)	0.080 (2.0)	32 (0.92)	18 (1.3)		J 2, 4, 5, 11A, 12	J 1–7, 10, 11A, 12
18 (1.2)	0.100 (2.5)	48 (1.6)	16 (1.6)		J 2, 4, 5, 11A, 12	J 1–7, 10, 11A, 12
16 (1.5)	0.125 (3.2)		14 (2.0)		J 2, 4, 5, 11A, 12	J 2, 4, 5, 12
14 (1.9)			12 (2.8)		J 2, 4, 5, 11A, 12	J 2, 4, 5, 12
12 (2.7)			10 (3.5)		J 2, 4, 5, 11A, 12	J 2, 4, 5, 12

*Galvanized coated metal 1" = 25 mm

J1	J2	J3	J4	J5	J6
	12"		6"		¾
4" LAP	BUTT + BACK-UP PLATE	4" JOGGLE (OFF-SET FLUSH)	BUTT + COVER PLATE	6" COVER + 12" BACKUP PLATES	T & G

J7	J8	J9	J10	J11	J11A	J12
¾"						¾*
T & G FLUSH	STDG SEAM	1" DRIVE	¾" HOOK SEAM	¾" INSIDE SLIP (POCKET)	¾" S SLIP	DBL S

Table 2–1 Gravel–Stop and Cap Fascia Design

NOTE:

See Appendix L for gage and other requirements when fascia must meet wind uplift specifications.

SMACNA TABLE 2-1 — 7

12" = 1'-0"

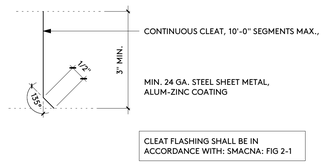

PROFILE - CLEAT — 8

6" = 1'-0"

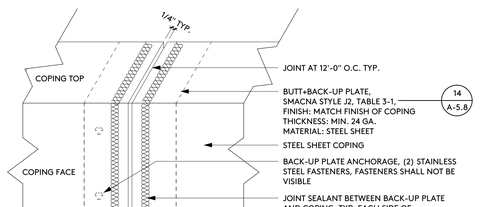

COPING EXPANSION JOINTS — 1

3" = 1'-0"

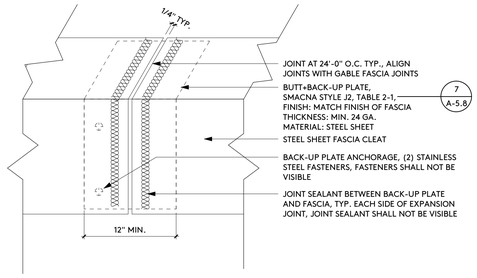

GABLE EXPANSION JOINTS — 2

3" = 1'-0"

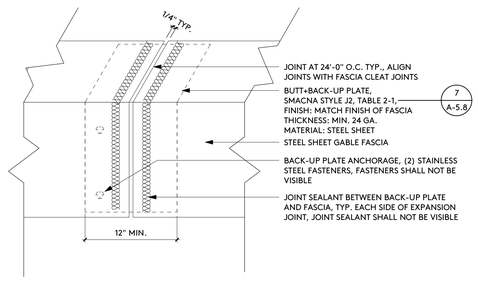

GABLE EXPANSION JOINTS — 3

3" = 1'-0"

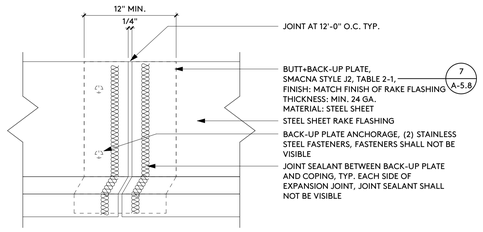

RAKE FLASHING EXPANSION JOINTS — 4

3" = 1'-0"

IDENTIFICATION STAMP
DIV. OF THE STATE ARCHITECT
APP: 03-122664 INC:
REVIEWED FOR
SS ☑ FLS ☑ ACS ☑
DATE: 05/12/2023

pjhm architects
OC Office: 24461 Ridge Route Drive #100, Laguna Hills, CA 92653 • LA Office: 837 Traction Avenue, #410, Los Angeles, CA 90013 • OC Phone: 949.496.6191 • SD Office: 804 Pier View Way #103, Oceanside, CA 92054 • SD Phone: 760.730.5527 • LA Phone: 213.278.0172 • Web: pjhm.com

LICENSED ARCHITECT
RICHARD W. RUDD
NO. C15585
REN. 02/25
STATE OF CALIFORNIA

HIGHLAND HIGH SCHOOL
50M POOL & AQUATICS CENTER

KERN HIGH SCHOOL DISTRICT

ROOF PLAN DETAILS

A-5.8

4/13/2023 9:05:17 AM

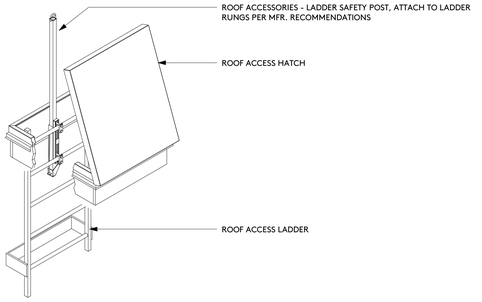

ROOF HATCH ACCESS 13

1" = 1'-0"

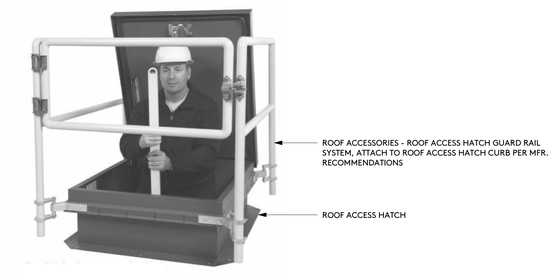

ROOF HATCH ACCESS 9

1" = 1'-0"

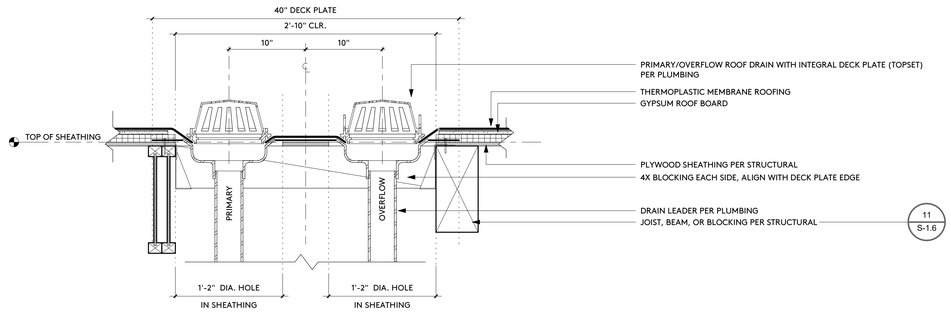

DECK PENETRATION - ROOF DRAIN ASSEMBLY 1

1 1/2" = 1'-0"

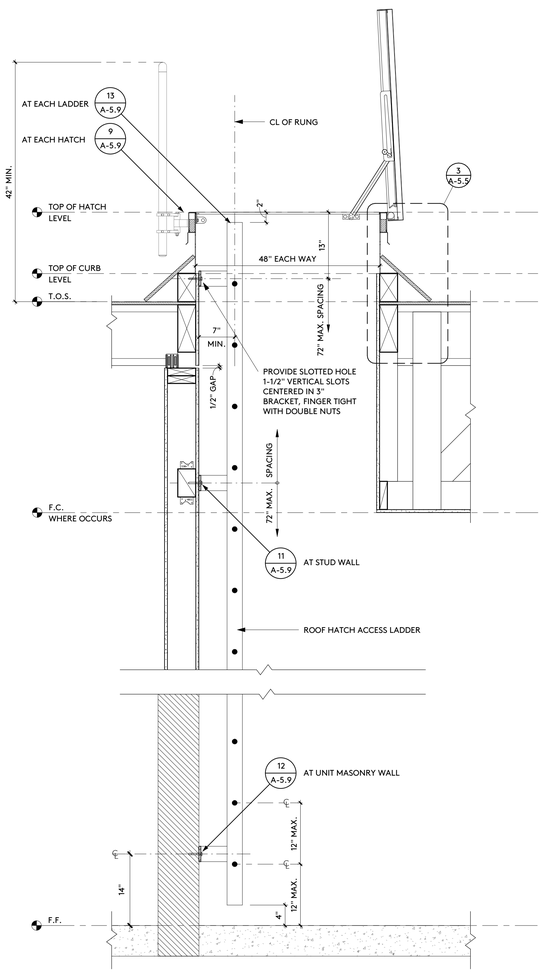

ROOF HATCH ACCESS LADDER 16

1" = 1'-0"

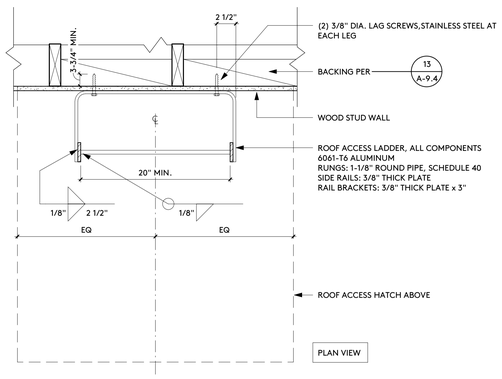

ANCHORAGE 11

1 1/2" = 1'-0"

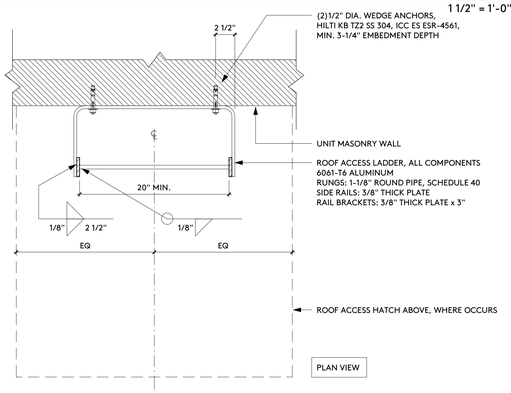

ANCHORAGE 12

1 1/2" = 1'-0"

1 Panel System
(Most Recommended)
Standard Cross Section

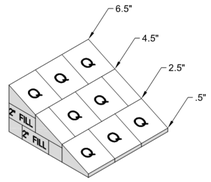

TAPERED INSULATION - 1/2"/FOOT SLOPE 7

1/2" = 1'-0"

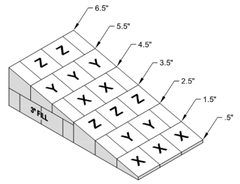

3 Panel System
Standard Cross Section

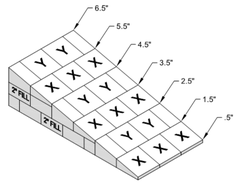

2 Panel System
Standard Cross Section

TAPERED INSULATION - 1/4"/FOOT SLOPE 3

1/2" = 1'-0"

1 Panel System
Non-Standard Cross Section

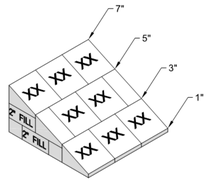

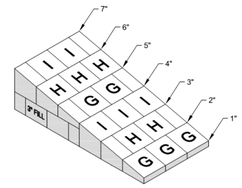

3 Panel System
Standard Cross Section

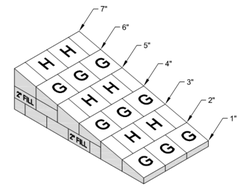

2 Panel System
Standard Cross Section

IDENTIFICATION STAMP
DIV. OF THE STATE ARCHITECT
APP: 03-122664 INC:
REVIEWED FOR
SS ☑ FLS ☑ ACS ☑
DATE: 05/12/2023

pjhm architects

LICENSED ARCHITECT
RICHARD W. PRIMUS
NO. C15585
REN. 02/25
STATE OF CALIFORNIA

OC Office: 24461 Ridge Route Drive #100, Laguna Hills, CA 92653 • OC Phone: 949.496.6191 • SD Office: 804 Pier View Way #103, Oceanside, CA 92054 • SD Phone: 760.730.5527 • LA Office: 837 Traction Avenue, #410, Los Angeles, CA 90013 • LA Phone: 213.278.0172 • Web: pjhm.com

HIGHLAND HIGH SCHOOL
50M POOL & AQUATICS CENTER

KERN HIGH SCHOOL DISTRICT

ROOF PLAN DETAILS

A-5.9

4/13/2023 9:05:18 AM

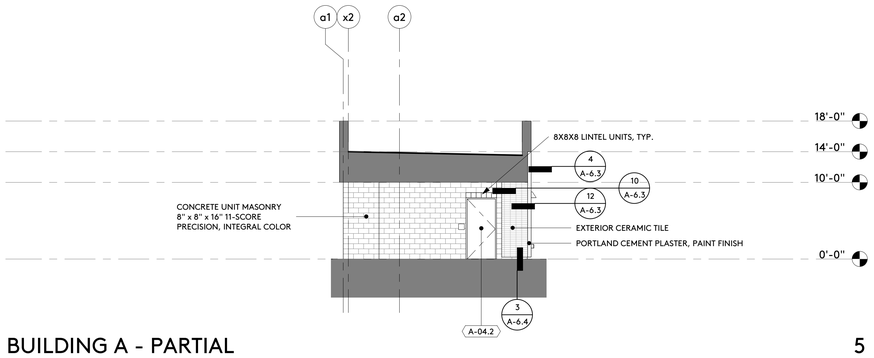

BUILDING A - PARTIAL 5

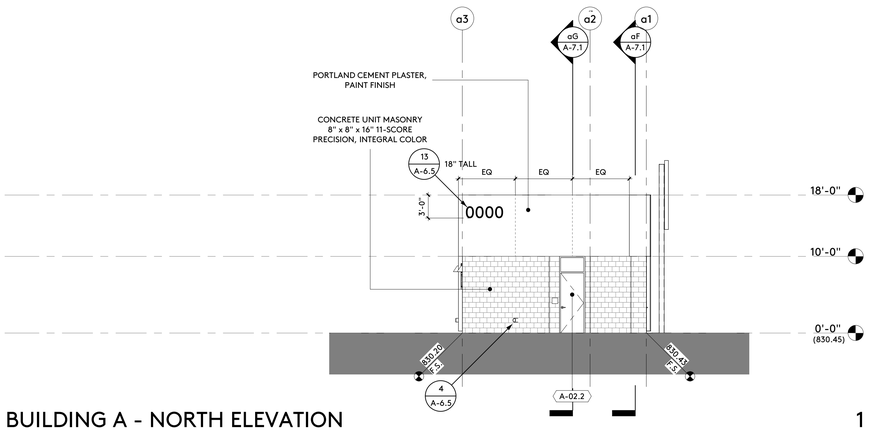

BUILDING A - NORTH ELEVATION 1

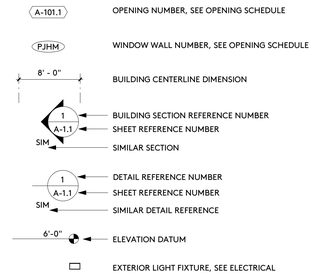

SYMBOLS

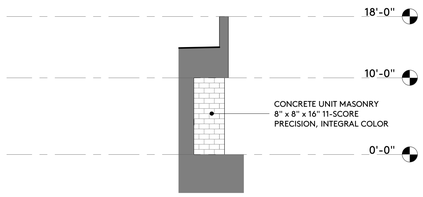

BUILDING A - PARTIAL 7

1/8" = 1'-0"

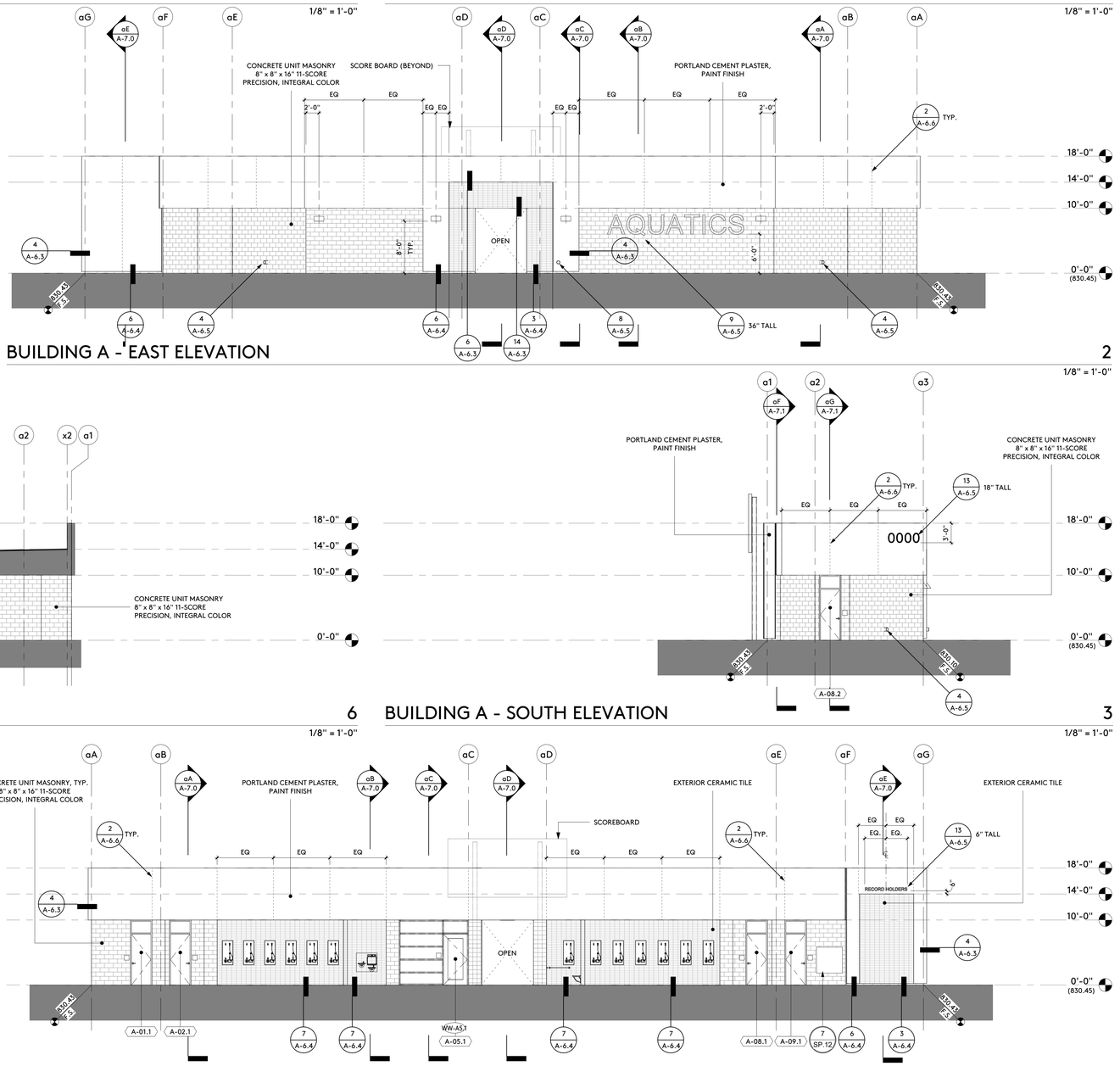

BUILDING A - EAST ELEVATION 2

1/8" = 1'-0"

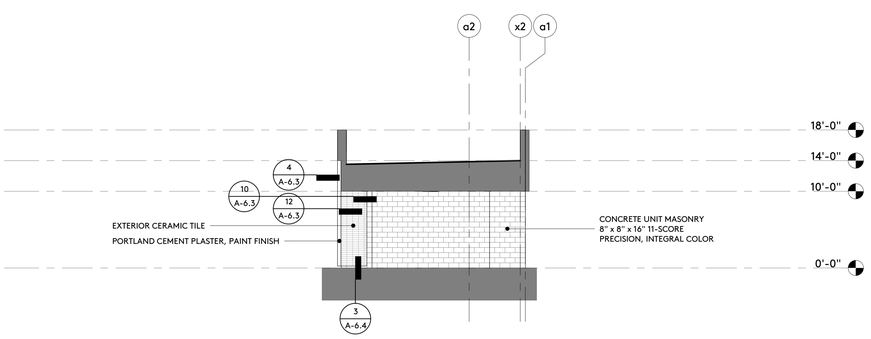

BUILDING A - PARTIAL 6

BUILDING A - SOUTH ELEVATION 3

1/8" = 1'-0"

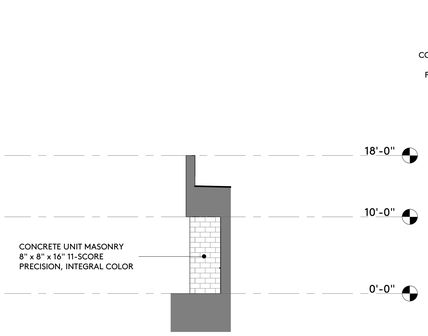

BUILDING A - PARTIAL 8

1/8" = 1'-0"

BUILDING A - WEST ELEVATION 4

1/8" = 1'-0"

IDENTIFICATION STAMP
DIV. OF THE STATE ARCHITECT
APP: 03-122664 INC:
REVIEWED FOR
SS ☑ FLS ☑ ACS ☑
DATE: 05/12/2023

pjhm architects
LICENSED ARCHITECT
RICHARD W. PRIMUS
NO. C15585
REN. 02/25
STATE OF CALIFORNIA
SD Phone: 760.730.5527 • LA Office: 837 Traction Avenue, #410, Los Angeles, CA 90013 • LA Phone: 213.278.0172 • Web: pjhm.com
OC Office: 24461 Ridge Route Drive #100, Laguna Hills, CA 92653 • OC Phone: 949.496.6191 • SD Office: 804 Pier View Way #103, Oceanside, CA 92054

HIGHLAND HIGH SCHOOL
50M POOL & AQUATICS CENTER

KERN HIGH SCHOOL DISTRICT

EXTERIOR ELEVATIONS

A-6.0

4/13/2023 9:05:20 AM

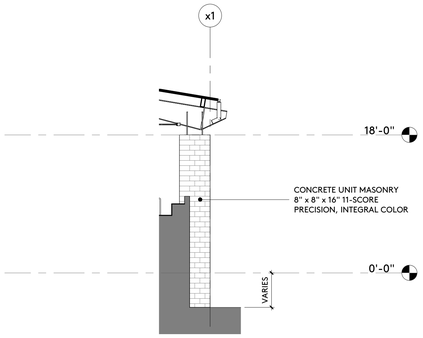

BUILDING B - PARTIAL 13

1/8" = 1'-0"

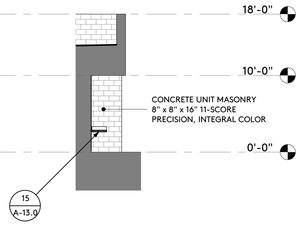

BUILDING B - PARTIAL 9

1/8" = 1'-0"

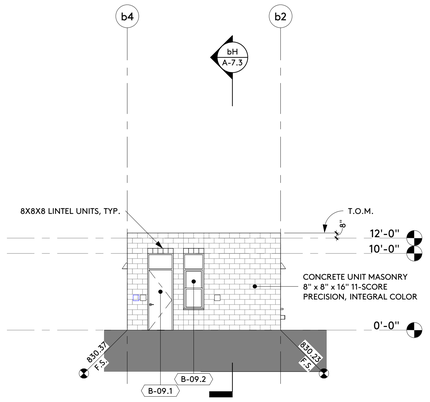

BUILDING B - PARTIAL 5

1/8" = 1'-0"

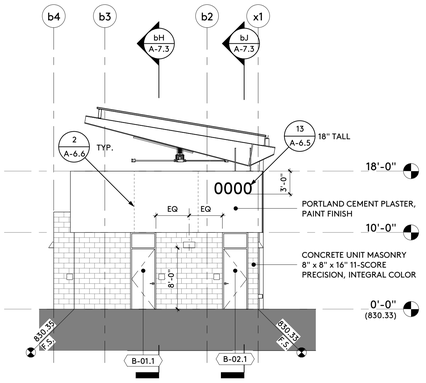

BUILDING B - NORTH ELEVATION 1

1/8" = 1'-0"

SYMBOLS

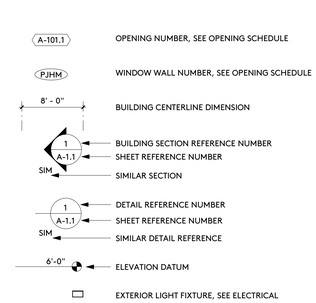

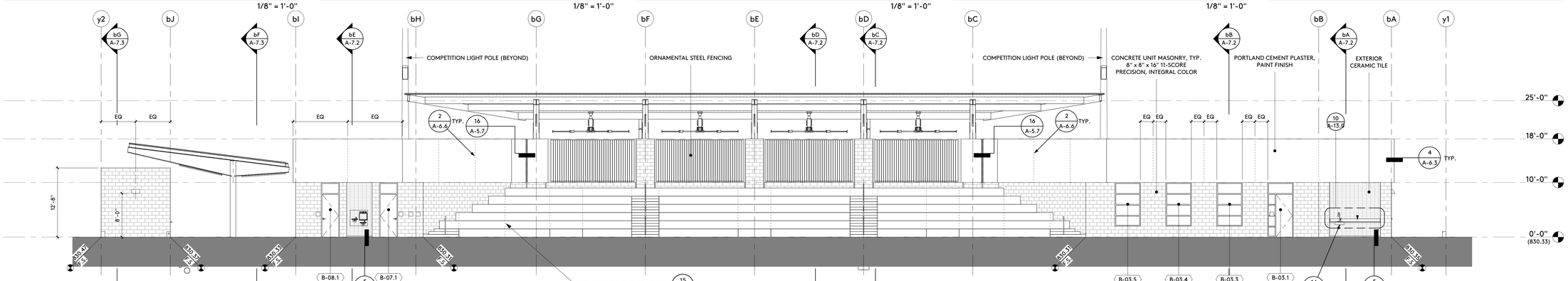

BUILDING B - EAST ELEVATION 2

1/8" = 1'-0"

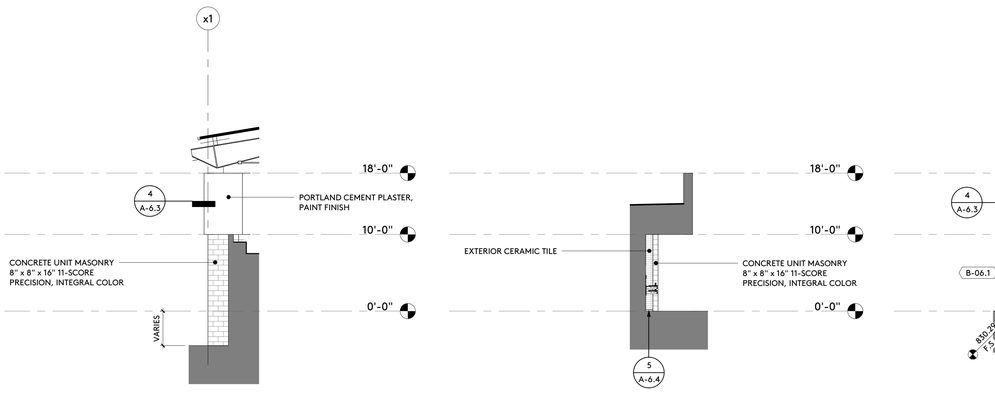

BUILDING B - PARTIAL 15

1/8" = 1'-0"

BUILDING B - PARTIAL 11

1/8" = 1'-0"

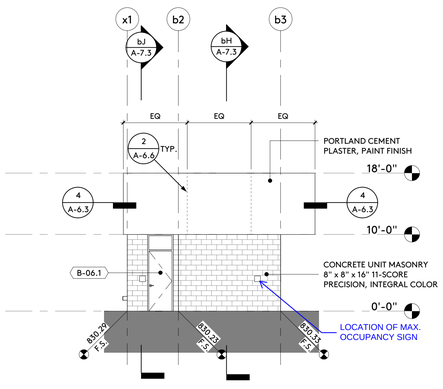

BUILDING B - PARTIAL 7

1/8" = 1'-0"

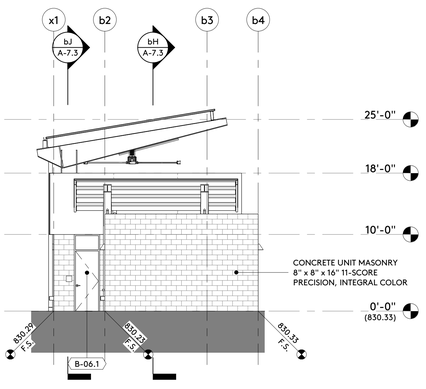

BUILDING B - SOUTH ELEVATION 3

1/8" = 1'-0"

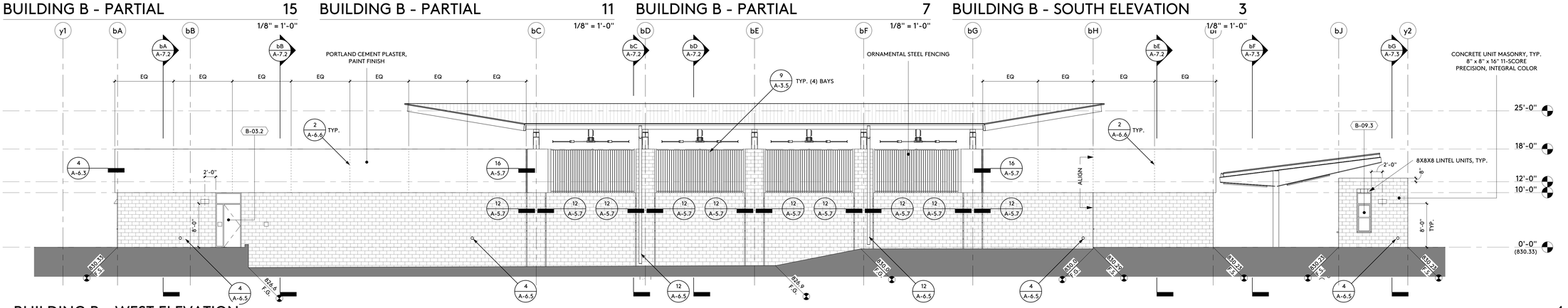

BUILDING B - WEST ELEVATION 4

1/8" = 1'-0"

4/13/2023 11:27:04 AM

IDENTIFICATION STAMP
DIV. OF THE STATE ARCHITECT
APP: 03-122664 INC:
REVIEWED FOR
SS ☑ FLS ☑ ACS ☑
DATE: 05/12/2023

pjhm architects

LICENSED ARCHITECT
RICHARD W. FRUIN
NO. C15585
REN. 02/25
STATE OF CALIFORNIA

HIGHLAND HIGH SCHOOL
50M POOL & AQUATICS CENTER

KERN HIGH SCHOOL DISTRICT

EXTERIOR ELEVATIONS

A-6.1

OC Office: 24461 Ridge Route Drive #100, Laguna Hills, CA 92653 • OC Phone: 949.496.6191 • SD Office: 804 Pier View Way #103, Oceanside, CA 92054
• SD Phone: 760.730.5527 • LA Office: 837 Traction Avenue, #410, Los Angeles, CA 90013 • LA Phone: 213.278.0172 • Web: pjhm.com



BUILDING C - NORTH ELEVATION

1

1/8" = 1'-0"

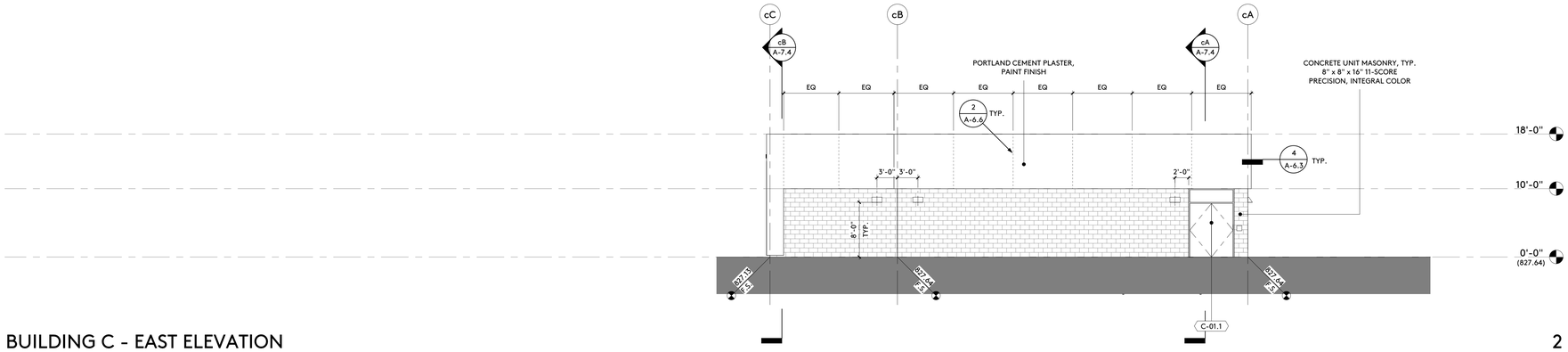

BUILDING C - EAST ELEVATION

2

1/8" = 1'-0"

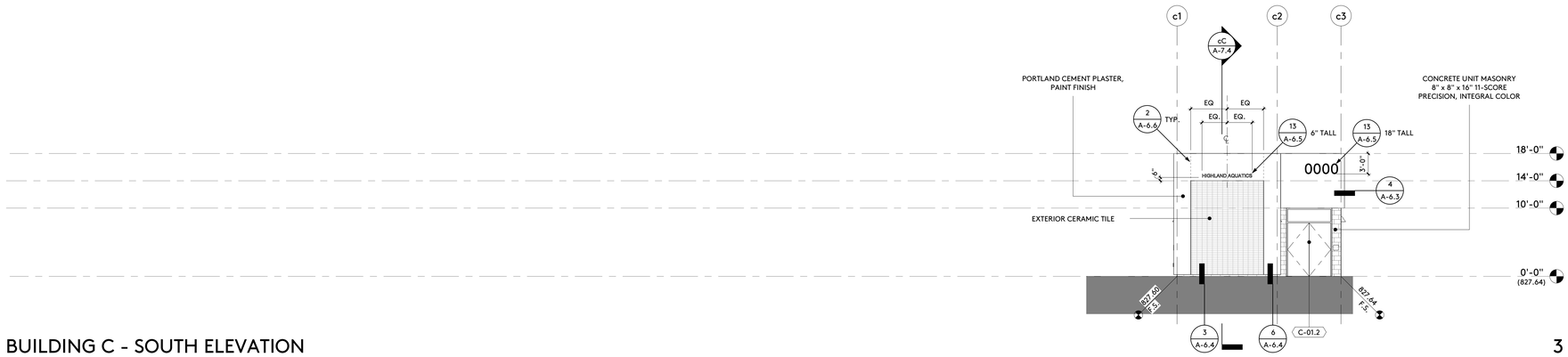

BUILDING C - SOUTH ELEVATION

3

1/8" = 1'-0"

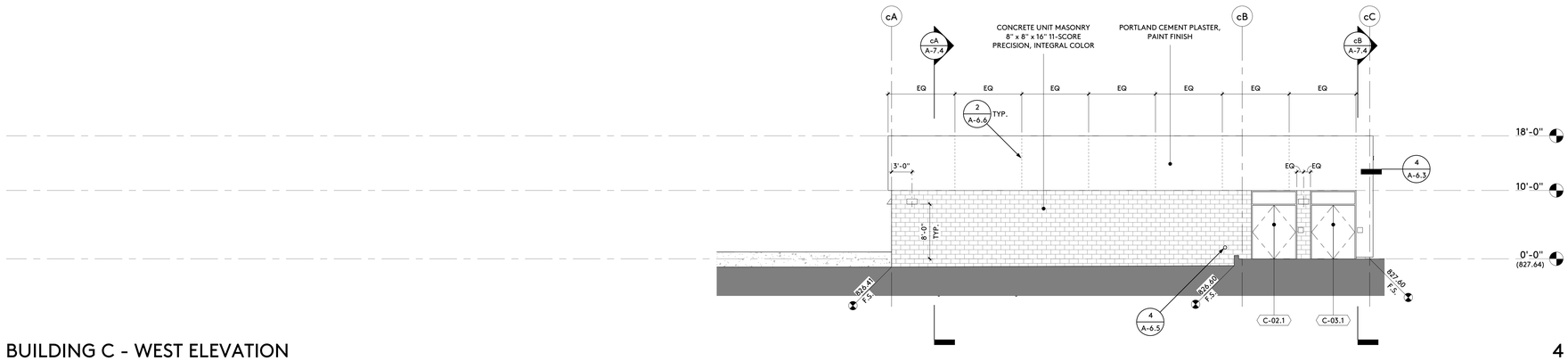

BUILDING C - WEST ELEVATION

4

1/8" = 1'-0"

A-101.1 OPENING NUMBER, SEE OPENING SCHEDULE

PJHM WINDOW WALL NUMBER, SEE OPENING SCHEDULE

8' - 0" BUILDING CENTERLINE DIMENSION

1 A-1.1 SIM — BUILDING SECTION REFERENCE NUMBER; SHEET REFERENCE NUMBER; SIMILAR SECTION

1 A-1.1 SIM — DETAIL REFERENCE NUMBER; SHEET REFERENCE NUMBER; SIMILAR DETAIL REFERENCE

6'-0" ELEVATION DATUM

EXTERIOR LIGHT FIXTURE, SEE ELECTRICAL

SYMBOLS

IDENTIFICATION STAMP
DIV. OF THE STATE ARCHITECT
APP: 03-122664 INC:
REVIEWED FOR
SS ☑ FLS ☑ ACS ☑
DATE: 05/12/2023

pjhm architects

LICENSED ARCHITECT
THOMAS W. KRUSE
NO. C15585
REN. 02/25
STATE OF CALIFORNIA

HIGHLAND HIGH SCHOOL
50M POOL & AQUATICS CENTER

KERN HIGH SCHOOL DISTRICT

EXTERIOR ELEVATIONS

A-6.2

OC Office: 24461 Ridge Route Drive #100, Laguna Hills, CA 92653 • OC Phone: 949.496.6191 • SD Office: 804 Pier View Way #103, Oceanside, CA 92054 • SD Phone: 760.730.5527 • LA Office: 837 Traction Avenue, #410, Los Angeles, CA 90013 • LA Phone: 213.278.0172 • Web: pjhm.com

4/13/2023 11:27:05 AM

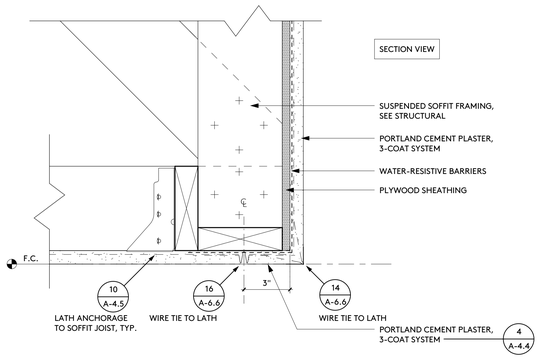

FASCIA TO SOFFIT 13

3" = 1'-0"

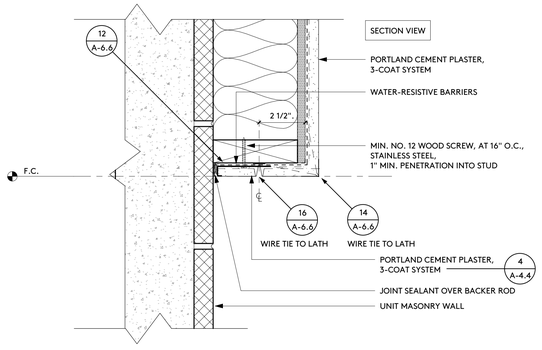

SOFFIT TO WALL 9

3" = 1'-0"

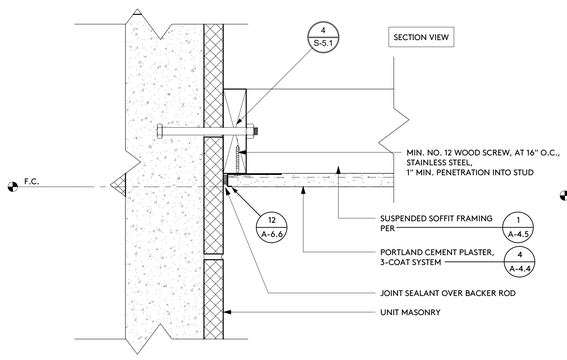

SOFFIT TO WALL 5

3" = 1'-0"

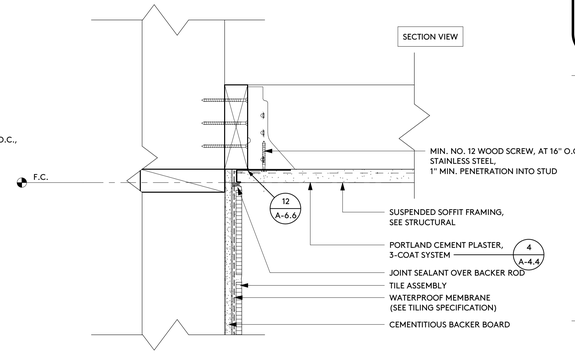

SOFFIT TO WALL 1

3" = 1'-0"

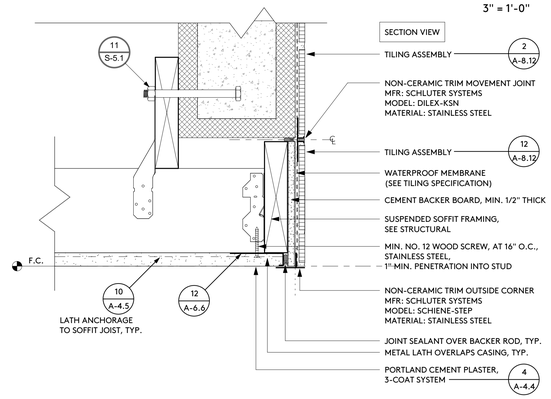

FASCIA TO SOFFIT 14

3" = 1'-0"

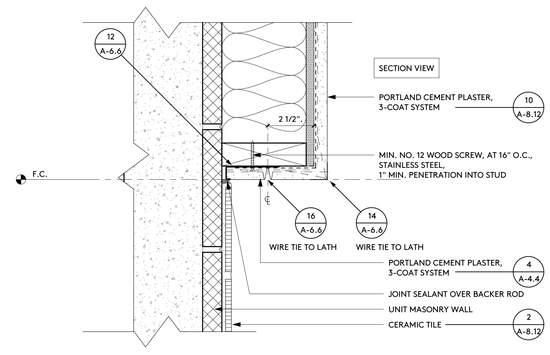

SOFFIT TO WALL 6

3" = 1'-0"

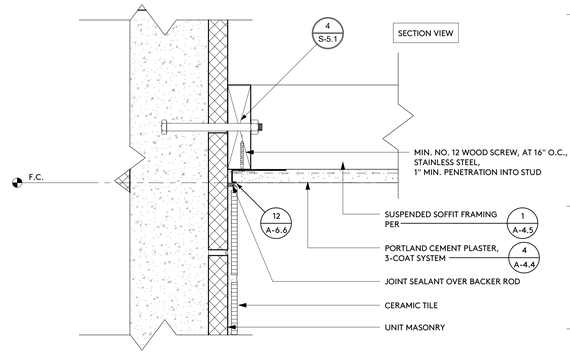

SOFFIT TO WALL 2

3" = 1'-0"

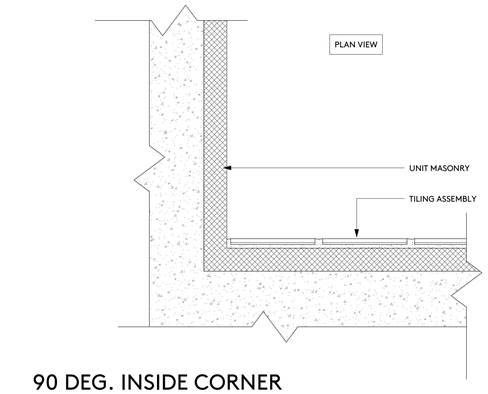

90 DEG. INSIDE CORNER 11

3" = 1'-0"

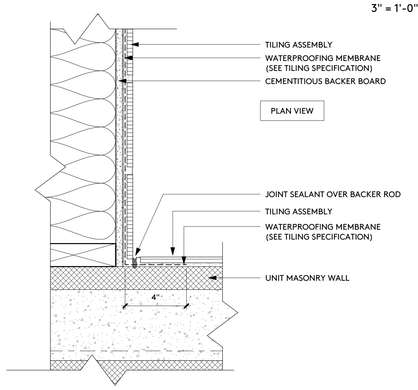

90 DEG. INSIDE CORNER 7

3" = 1'-0"

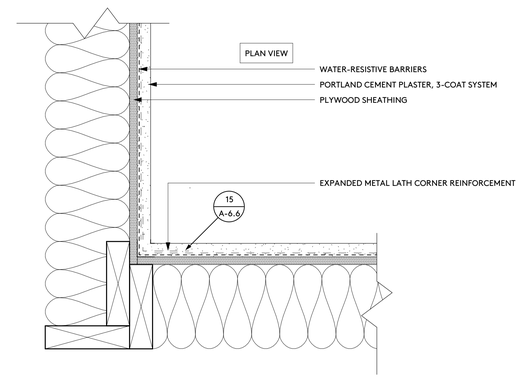

90 DEG. INSIDE CORNER 3

3" = 1'-0"

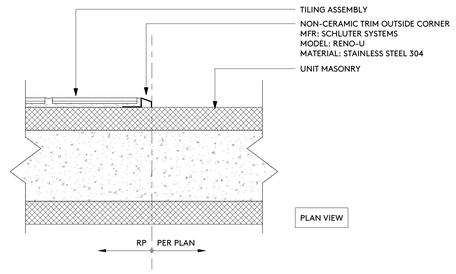

IN-PLANE TERMINATION 10

3" = 1'-0"

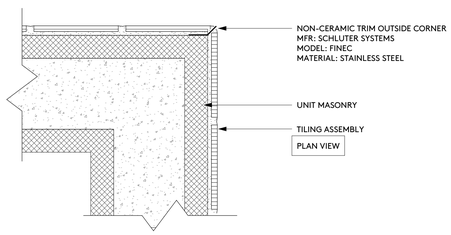

90 DEG. OUTSIDE CORNER 12

3" = 1'-0"

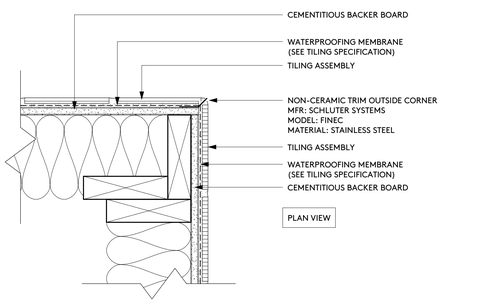

90 DEG. OUTSIDE CORNER 8

3" = 1'-0"

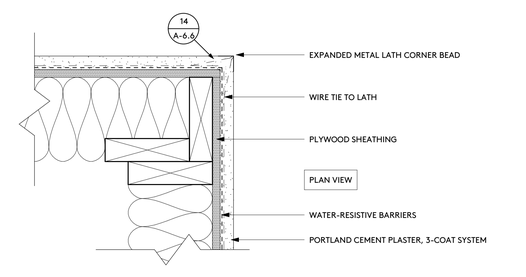

90 DEG. OUTSIDE CORNER 4

3" = 1'-0"

IDENTIFICATION STAMP
DIV. OF THE STATE ARCHITECT
APP: 03-122664 INC:
REVIEWED FOR
SS ☑ FLS ☑ ACS ☑
DATE: 05/12/2023

pjhm architects
LICENSED ARCHITECT
RICHARD W. FRIEDMAN
NO. C15585
REN. 02/25
STATE OF CALIFORNIA
LA Phone: 213.278.0172 • Web: pjhm.com
LA Office: 837 Traction Avenue, #410, Los Angeles, CA 90013 • OC Phone: 949.496.6191 • SD Office: 804 Pier View Way #103, Oceanside, CA 92054 • SD Phone: 760.730.5527 • OC Office: 24461 Ridge Route Drive #100, Laguna Hills, CA 92653

HIGHLAND HIGH SCHOOL
50M POOL & AQUATICS CENTER

KERN HIGH SCHOOL DISTRICT

EXTERIOR ELEVATION DETAILS

A-6.3

4/13/2023 9:05:25 AM

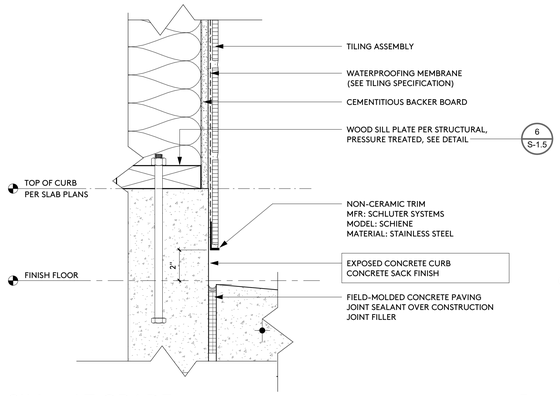

SILL - AT GRADE 5

3" = 1'-0"

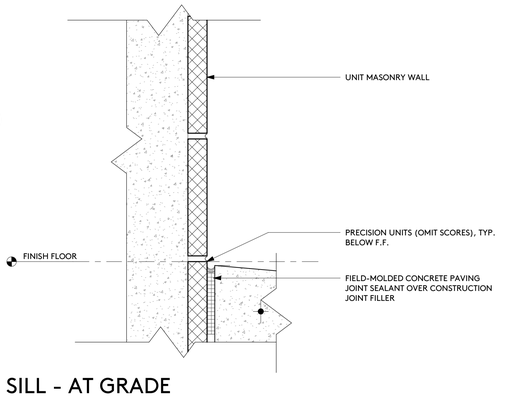

SILL - AT GRADE 1

3" = 1'-0"

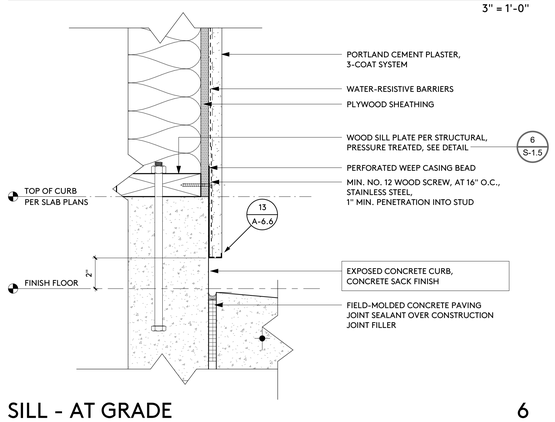

SILL - AT GRADE 6

3" = 1'-0"

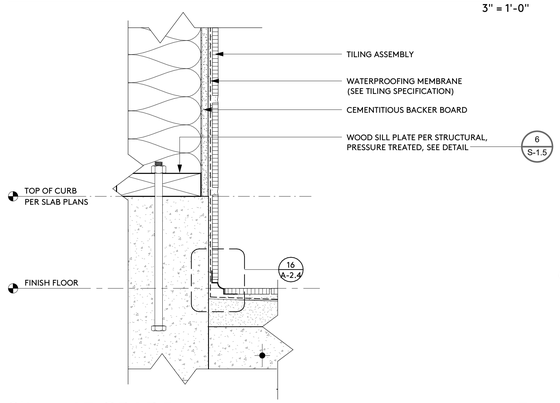

SILL - AT GRADE 7

3" = 1'-0"

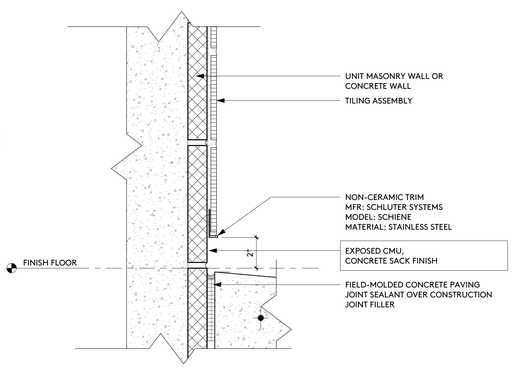

SILL - AT GRADE 3

3" = 1'-0"

IDENTIFICATION STAMP
DIV. OF THE STATE ARCHITECT
APP: 03-122664 INC:
REVIEWED FOR
SS ☑ FLS ☑ ACS ☑
DATE: 05/12/2023

pjhm architects

LICENSED ARCHITECT
RICHARD W. PRIMM
NO. C15585
REN. 02/25
STATE OF CALIFORNIA

OC Office: 24461 Ridge Route Drive #100, Laguna Hills, CA 92653 • SD Phone: 760.730.5527 • LA Office: 837 Traction Avenue, #410, Los Angeles, CA 90013 • OC Phone: 949.496.6191 • LA Phone: 213.278.0172 • SD Office: 804 Pier View Way #103, Oceanside, CA 92054 • Web: pjhm.com

HIGHLAND HIGH SCHOOL
50M POOL & AQUATICS CENTER

KERN HIGH SCHOOL DISTRICT

EXTERIOR ELEVATION DETAILS

A-6.4

4/13/2023 11:27:06 AM

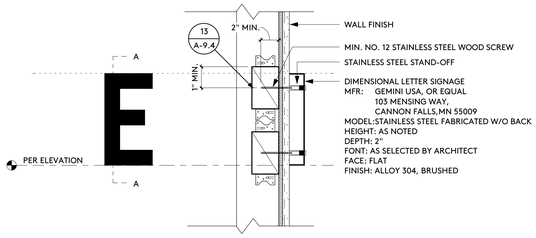

BUILDING SIGNAGE 13

1 1/2" = 1'-0"

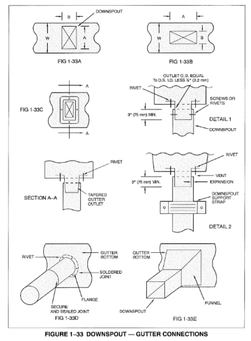

FIGURE 1-33 DOWNSPOUT — GUTTER CONNECTIONS

D - FIGURE 1-33

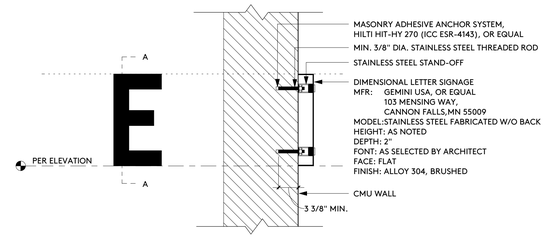

BUILDING SIGNAGE 9

1 1/2" = 1'-0"

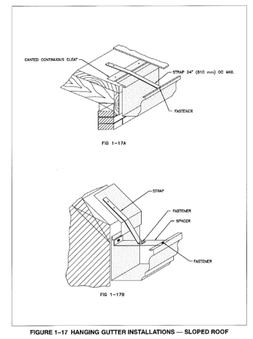

FIGURE 1-17 HANGING GUTTER INSTALLATIONS — SLOPED ROOF

C - FIGURE 1-17

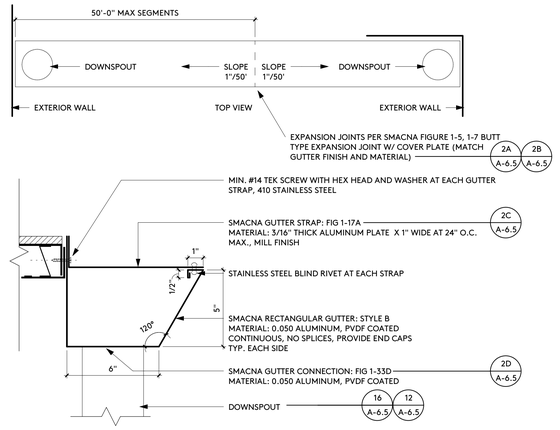

SHEET METAL GUTTERS 5

3" = 1'-0"

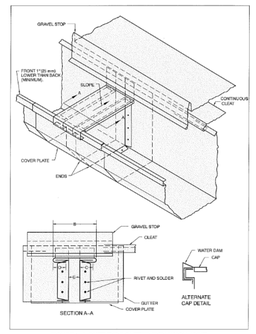

FIGURE 1-7 BUTT TYPE GUTTER EXPANSION JOINT

B - FIGURE 1-7

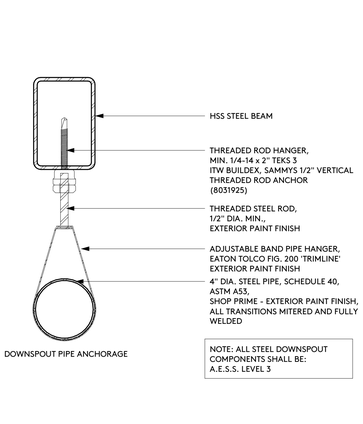

DOWNSPOUT TERMINATION 1

3" = 1'-0"

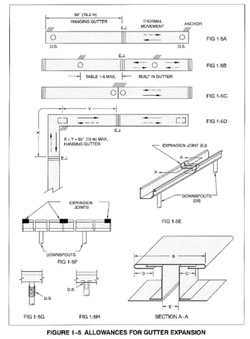

FIGURE 1-5 ALLOWANCES FOR GUTTER EXPANSION

A - FIGURE 1-5

SHEET METAL GUTTERS 2

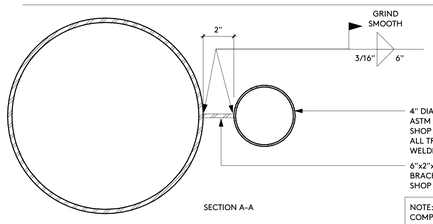

DOWNSPOUT TERMINATION 16

3" = 1'-0"

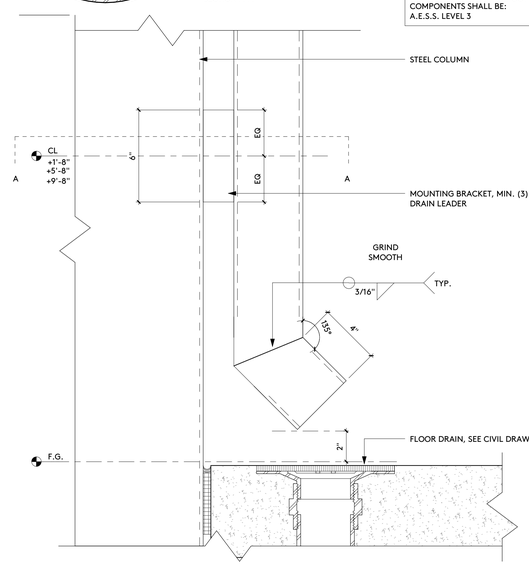

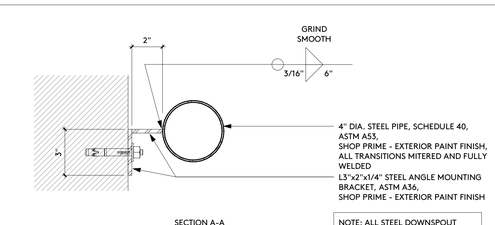

DOWNSPOUT TERMINATION 12

3" = 1'-0"

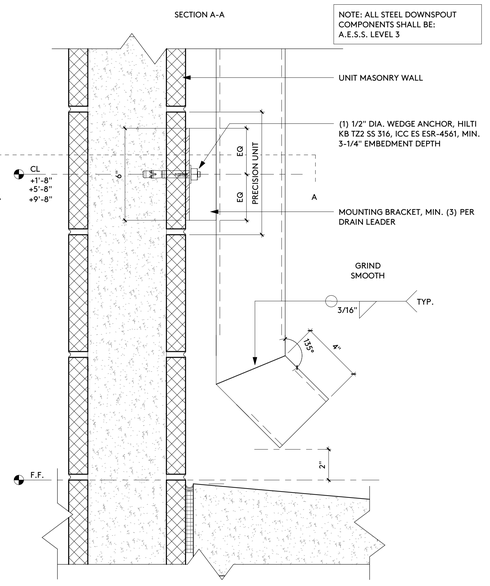

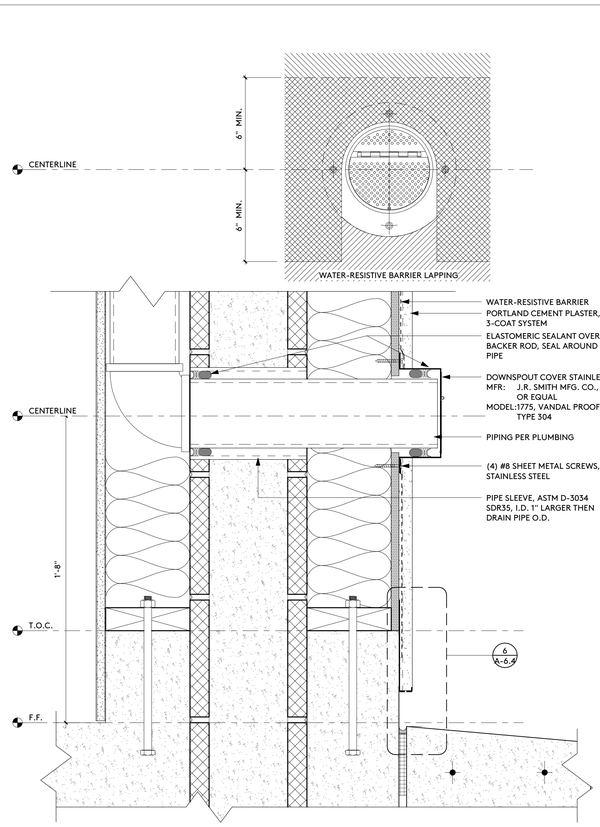

DOWNSPOUT TERMINATION 8

3" = 1'-0"

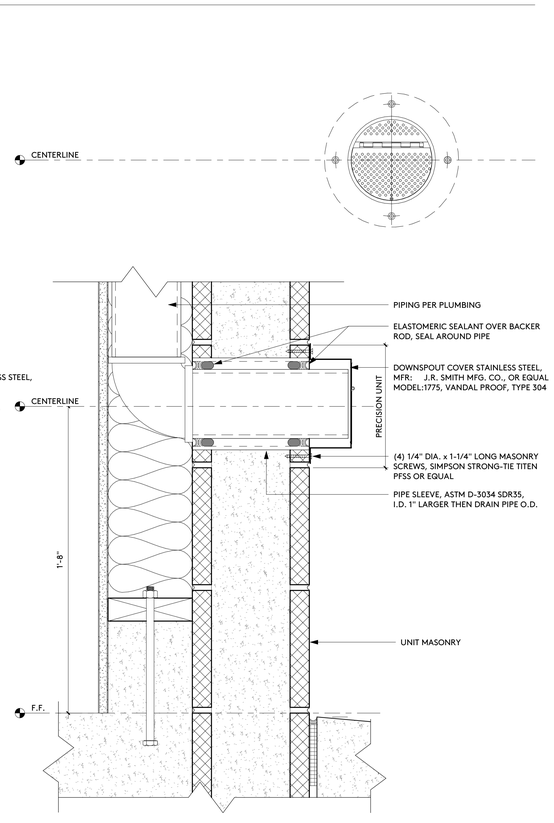

DOWNSPOUT TERMINATION 4

3" = 1'-0"

4/13/2023 9:05:27 AM

IDENTIFICATION STAMP
DIV. OF THE STATE ARCHITECT
APP: 03-122664 INC:
REVIEWED FOR
SS ☑ FLS ☑ ACS ☑
DATE: 05/12/2023

pjhm architects
LICENSED ARCHITECT
RICHARD W. FRIMAN
NO. C15585
REN. 02/25
STATE OF CALIFORNIA
OC Office: 24461 Ridge Route Drive #100, Laguna Hills, CA 92653 • OC Phone: 949.496.6191 • SD Office: 804 Pier View Way #103, Oceanside, CA 92054 • SD Phone: 760.730.5527 • LA Office: 837 Traction Avenue, #410, Los Angeles, CA 90013 • LA Phone: 213.278.0172 • Web: pjhm.com

HIGHLAND HIGH SCHOOL
50M POOL & AQUATICS CENTER

KERN HIGH SCHOOL DISTRICT

EXTERIOR ELEVATION DETAILS

A-6.5

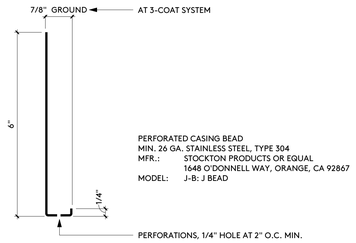

PROFILE 13

6" = 1'-0"

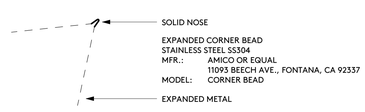

PROFILE 14

6" = 1'-0"

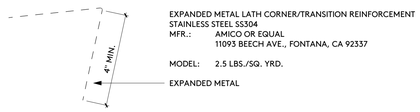

PROFILE 15

6" = 1'-0"

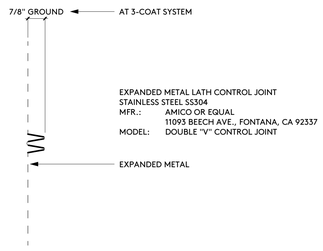

PROFILE 16

6" = 1'-0"

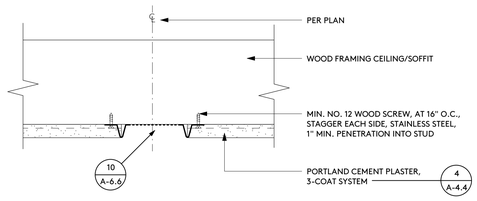

CEILING/SOFFIT VENT 9

3" = 1'-0"

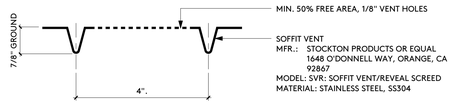

CEILING/SOFFIT VENT 10

6" = 1'-0"

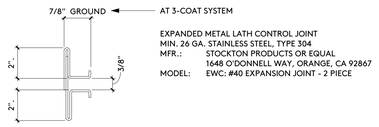

PROFILE 11

6" = 1'-0"

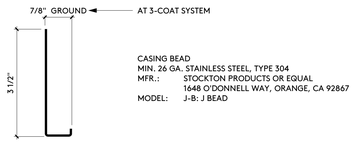

PROFILE 12

6" = 1'-0"

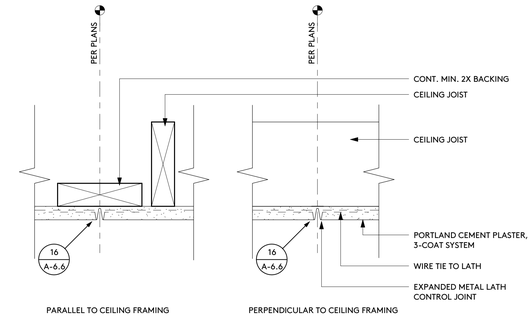

CONTROL JOINT 1

3" = 1'-0"

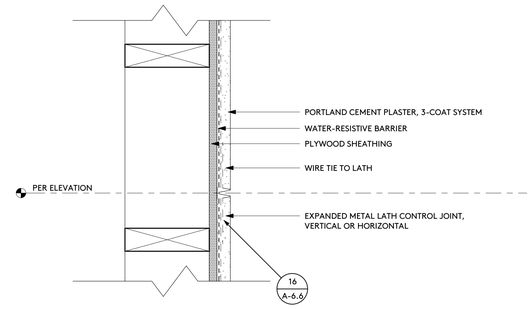

CONTROL JOINT 2

3" = 1'-0"

IDENTIFICATION STAMP
DIV. OF THE STATE ARCHITECT
APP: 03-122664 INC:
REVIEWED FOR
SS ☑ FLS ☑ ACS ☑
DATE: 05/12/2023

pjhm architects

LICENSED ARCHITECT
RICHARD W. PRIEST
NO. C15585
REN. 02/25
STATE OF CALIFORNIA

OC Office: 24461 Ridge Route Drive #100, Laguna Hills, CA 92653 • OC Phone: 949.496.6191 • SD Office: 804 Pier View Way #103, Oceanside, CA 92054 • SD Phone: 760.730.5527 • LA Office: 837 Traction Avenue, #410, Los Angeles, CA 90013 • LA Phone: 213.278.0172 • Web: pjhm.com

HIGHLAND HIGH SCHOOL
50M POOL & AQUATICS CENTER

KERN HIGH SCHOOL DISTRICT

EXTERIOR ELEVATION DETAILS

A-6.6

4/13/2023 9:05:27 AM

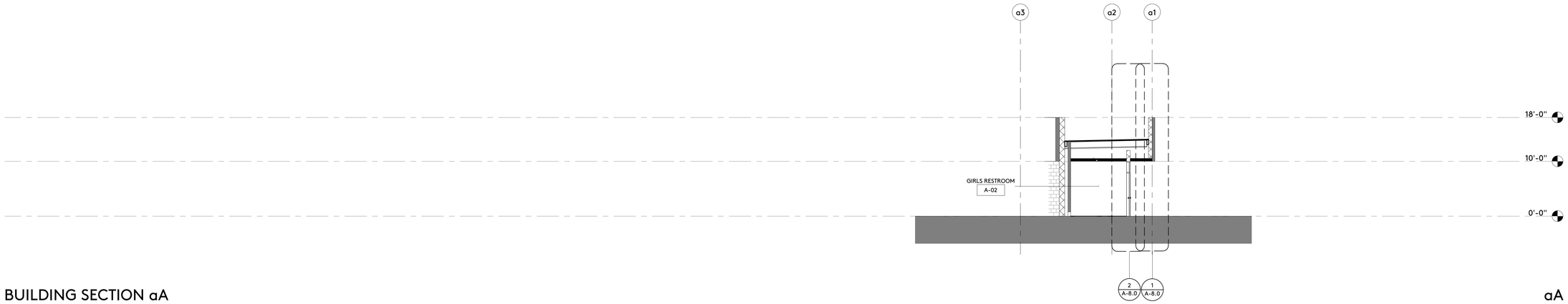

BUILDING SECTION aA

aA

1/8" = 1'-0"

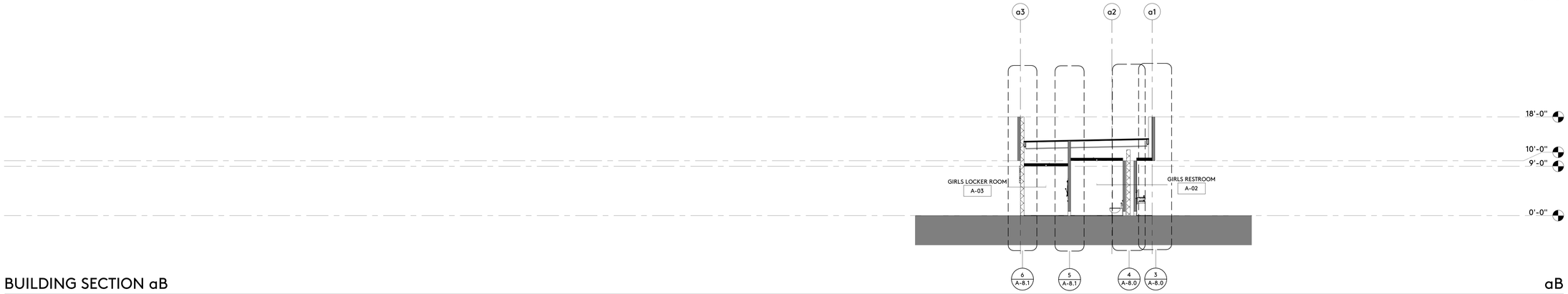

BUILDING SECTION aB

aB

1/8" = 1'-0"

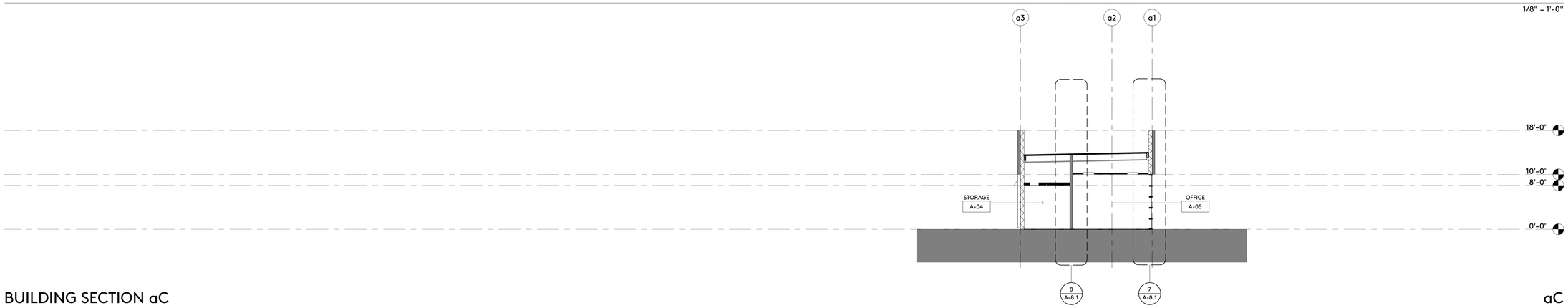

BUILDING SECTION aC

aC

1/8" = 1'-0"

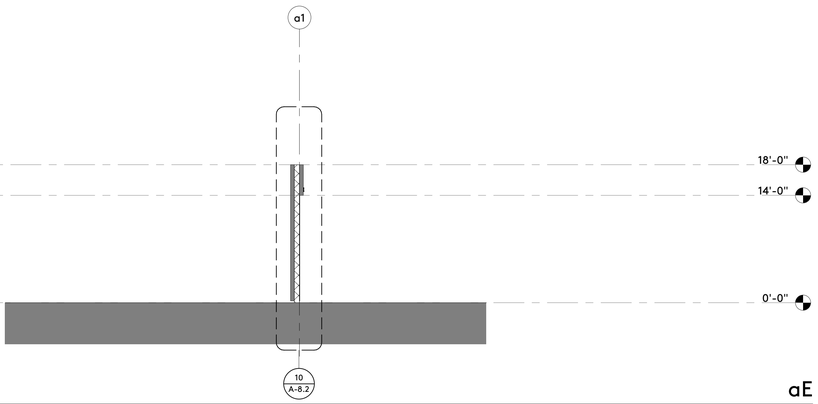

BUILDING SECTION aE

aE

1/8" = 1'-0"

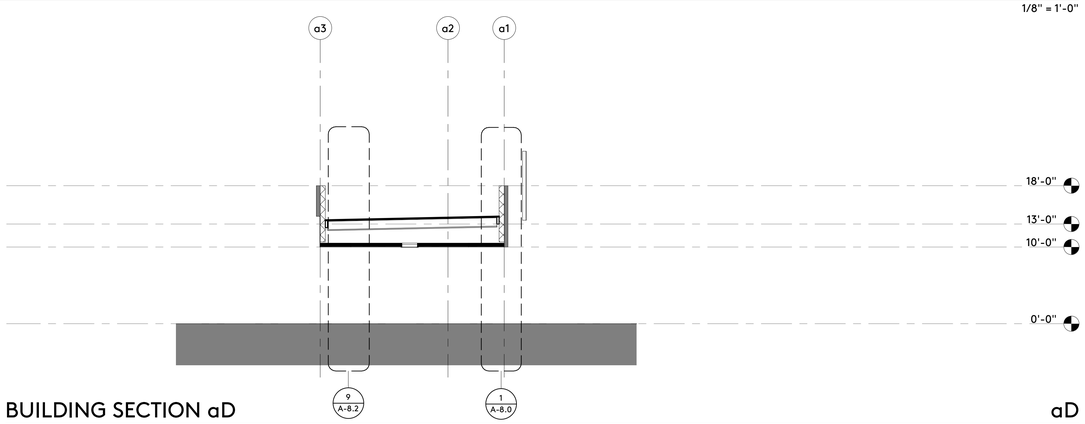

BUILDING SECTION aD

aD

1/8" = 1'-0"

IDENTIFICATION STAMP
DIV. OF THE STATE ARCHITECT
APP: 03-122664 INC:
REVIEWED FOR
SS ☑ FLS ☑ ACS ☑
DATE: 05/12/2023

pjhm architects

LICENSED ARCHITECT
RICHARD W. FRUIN
NO. C15585
REN. 02/25
STATE OF CALIFORNIA

OC Office: 24461 Ridge Route Drive #100, Laguna Hills, CA 92653 • SD Phone: 760.730.5527 • LA Office: 837 Traction Avenue, #410, Los Angeles, CA 90013 • OC Phone: 949.496.6191 • LA Phone: 213.278.0172 • SD Office: 804 Pier View Way #103, Oceanside, CA 92054 • Web: pjhm.com

HIGHLAND HIGH SCHOOL
50M POOL & AQUATICS CENTER

KERN HIGH SCHOOL DISTRICT

BUILDING SECTIONS

A-7.0

4/13/2023 9:05:28 AM

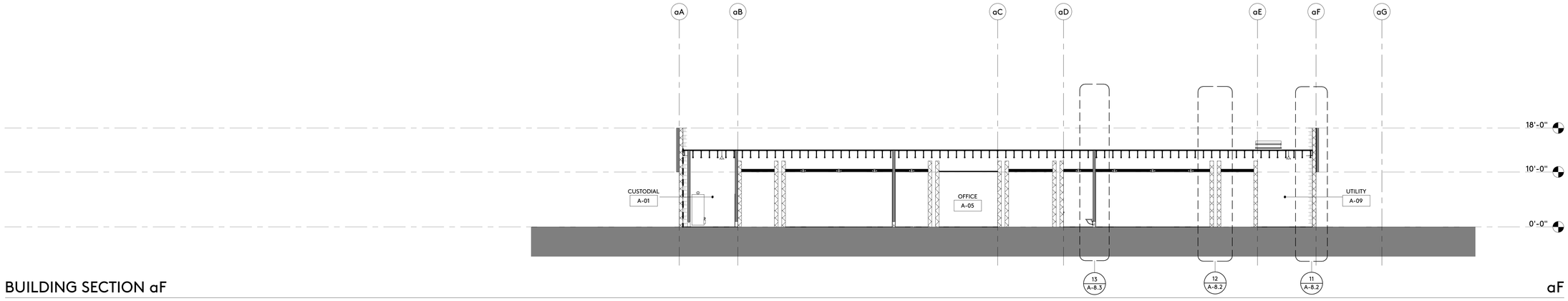

BUILDING SECTION aF

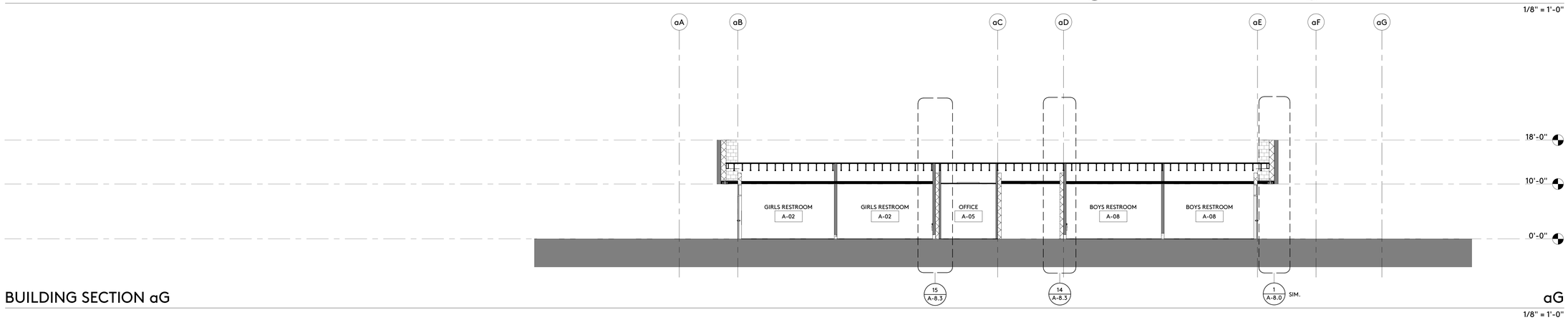

BUILDING SECTION aG

IDENTIFICATION STAMP
DIV. OF THE STATE ARCHITECT
APP: 03-122664 INC:
REVIEWED FOR
SS ☑ FLS ☑ ACS ☑
DATE: 05/12/2023

pjhm architects

LICENSED ARCHITECT
THOMAS W. KRUSE
NO. C15585
REN. 02/25
STATE OF CALIFORNIA

HIGHLAND HIGH SCHOOL
50M POOL & AQUATICS CENTER

KERN HIGH SCHOOL DISTRICT

BUILDING SECTIONS

A-7.1

OC Office: 24461 Ridge Route Drive #100, Laguna Hills, CA 92653 • OC Phone: 949.496.6191 • SD Office: 804 Pier View Way #103, Oceanside, CA 92054 • SD Phone: 760.730.5527 • LA Office: 837 Traction Avenue, #410, Los Angeles, CA 90013 • LA Phone: 213.278.0172 • Web: pjhm.com

4/13/2023 9:05:29 AM

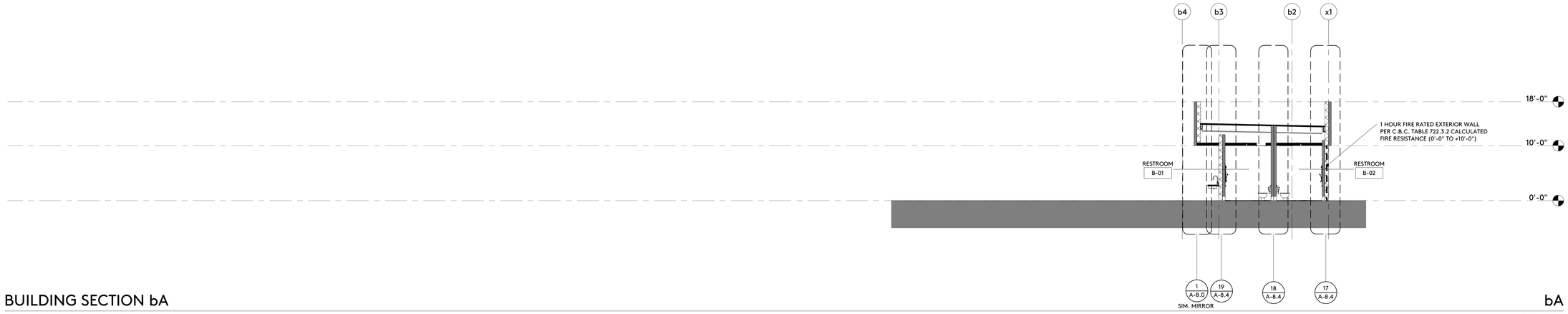

BUILDING SECTION bA

bA

1/8" = 1'-0"

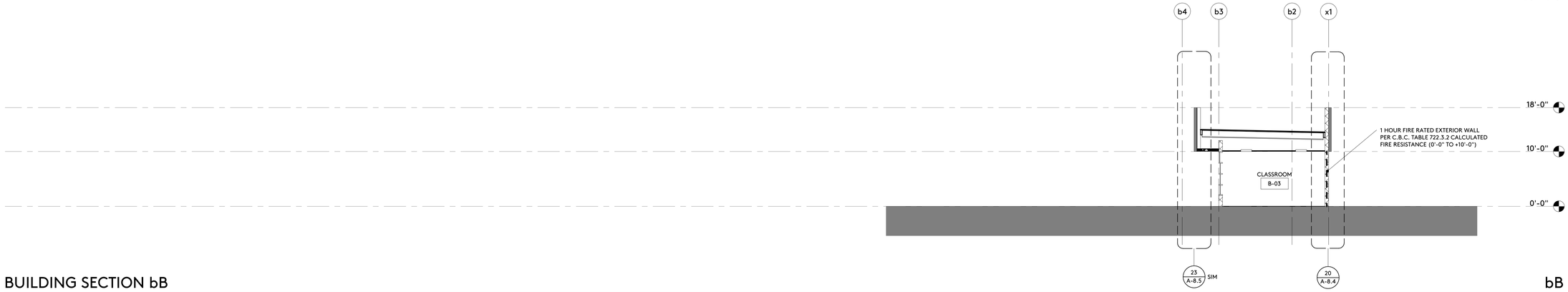

BUILDING SECTION bB

bB

1/8" = 1'-0"

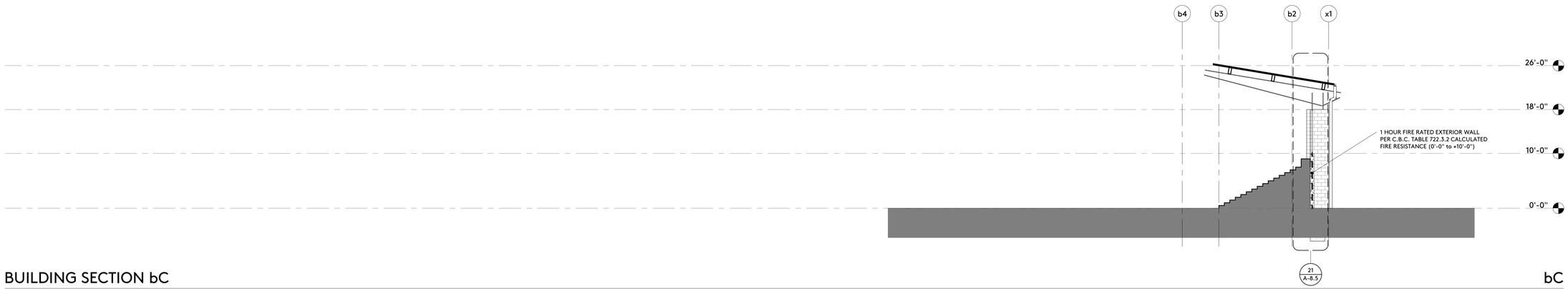

BUILDING SECTION bC

bC

1/8" = 1'-0"

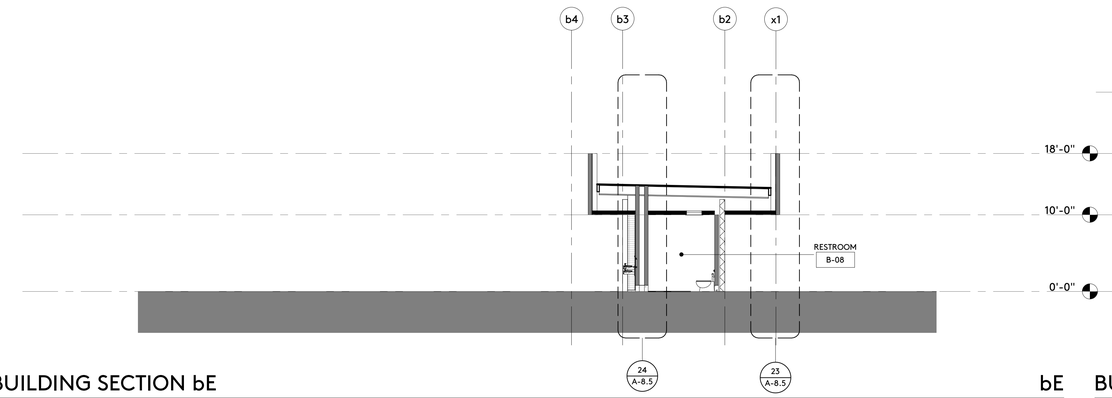

BUILDING SECTION bE

bE

1/8" = 1'-0"

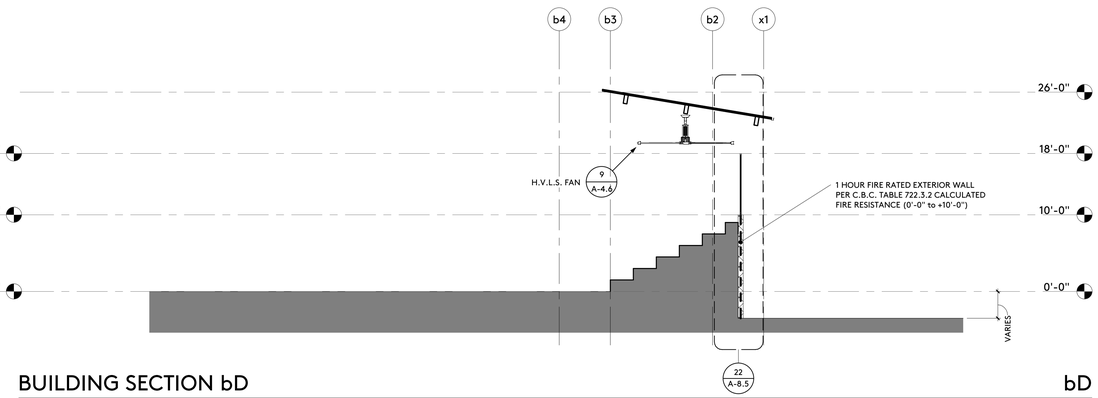

BUILDING SECTION bD

bD

1/8" = 1'-0"

IDENTIFICATION STAMP
DIV. OF THE STATE ARCHITECT
APP: 03-122664 INC:
REVIEWED FOR
SS ☑ FLS ☑ ACS ☑
DATE: 05/12/2023

pjhm architects

LICENSED ARCHITECT
THOMAS W. KRUSE
NO. C15585
REN. 02/25
STATE OF CALIFORNIA

HIGHLAND HIGH SCHOOL
50M POOL & AQUATICS CENTER

KERN HIGH SCHOOL DISTRICT

BUILDING SECTIONS

A-7.2

OC Office: 24461 Ridge Route Drive #100, Laguna Hills, CA 92653 • OC Phone: 949.496.6191 • SD Office: 804 Pier View Way #103, Oceanside, CA 92054 • SD Phone: 760.730.5527 • LA Office: 837 Traction Avenue, #410, Los Angeles, CA 90013 • LA Phone: 213.278.0172 • Web: pjhm.com

4/13/2023 9:05:30 AM



BUILDING SECTION bF

bF

1/8" = 1'-0"



BUILDING SECTION bG

bG

1/8" = 1'-0"

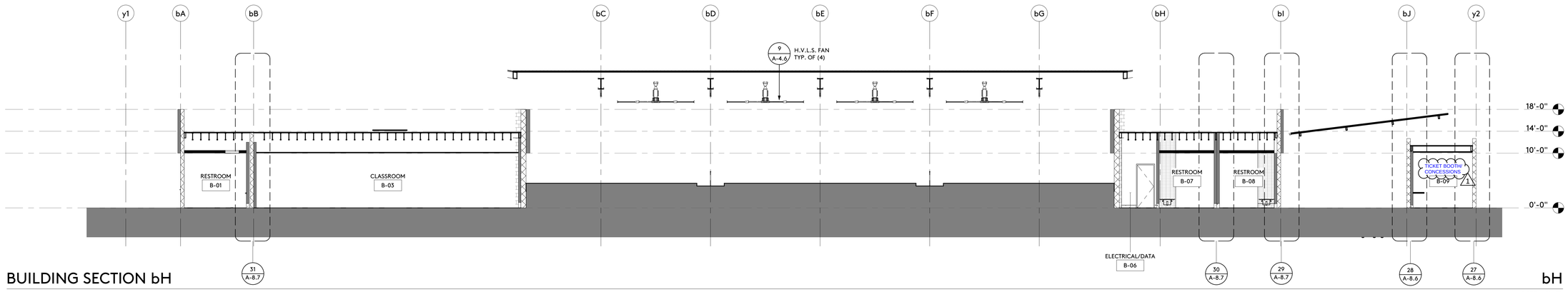

BUILDING SECTION bH

bH

1/8" = 1'-0"

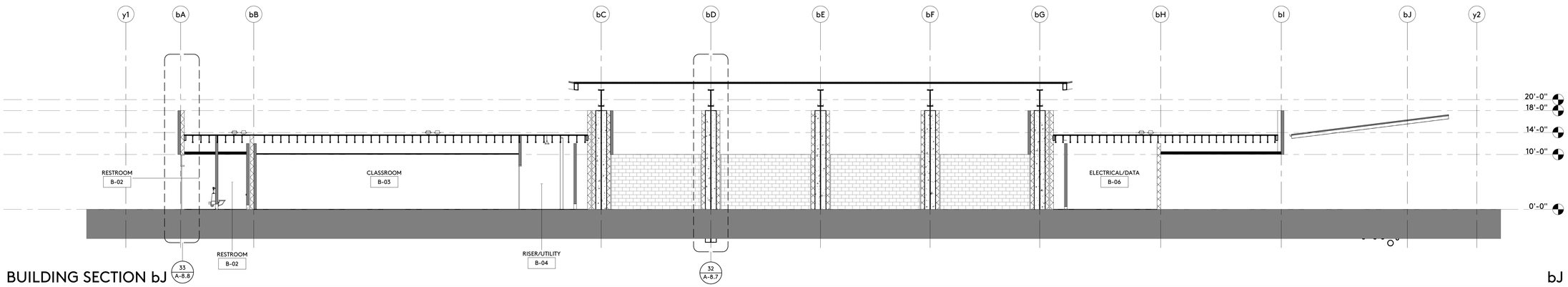

BUILDING SECTION bJ

bJ

1/8" = 1'-0"

IDENTIFICATION STAMP
DIV. OF THE STATE ARCHITECT
APP: 03-122664 INC:
REVIEWED FOR
SS ☑ FLS ☑ ACS ☑
DATE: 05/12/2023

pjhm architects

LICENSED ARCHITECT
THOMAS W. KRUSE
NO. C15585
REN. 02/25
STATE OF CALIFORNIA

HIGHLAND HIGH SCHOOL
50M POOL & AQUATICS CENTER

KERN HIGH SCHOOL DISTRICT

1 ADDENDUM NO. 1

BUILDING SECTIONS

A-7.3

OC Office: 24461 Ridge Route Drive #100, Laguna Hills, CA 92653 • OC Phone: 949.496.6191 • SD Office: 804 Pier View Way #103, Oceanside, CA 92054 • SD Phone: 760.730.5527 • LA Office: 837 Traction Avenue, #410, Los Angeles, CA 90013 • LA Phone: 213.278.0172 • Web: pjhm.com

4/13/2023 9:05:31 AM



BUILDING SECTION cA

cA

1/8" = 1'-0"



BUILDING SECTION cB

cB

1/8" = 1'-0"

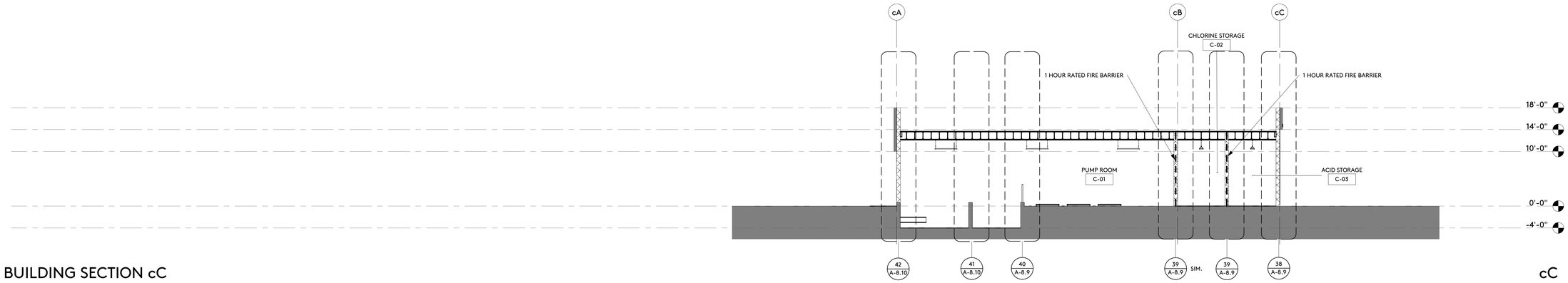

BUILDING SECTION cC

cC

1/8" = 1'-0"

IDENTIFICATION STAMP
DIV. OF THE STATE ARCHITECT
APP: 03-122664 INC:
REVIEWED FOR
SS ☑ FLS ☑ ACS ☑
DATE: 05/12/2023

pjhm architects

LICENSED ARCHITECT
RICHARD W. PRIEBE
No. C15585
REN. 02/25
STATE OF CALIFORNIA

OC Office: 24461 Ridge Route Drive #100, Laguna Hills, CA 92653 • OC Phone: 949.496.6191 • SD Office: 804 Pier View Way #103, Oceanside, CA 92054 • SD Phone: 760.730.5527 • LA Office: 837 Traction Avenue, #410, Los Angeles, CA 90013 • LA Phone: 213.278.0172 • Web: pjhm.com

HIGHLAND HIGH SCHOOL
50M POOL & AQUATICS CENTER

KERN HIGH SCHOOL DISTRICT

BUILDING SECTIONS

A-7.4

4/13/2023 11:27:06 AM

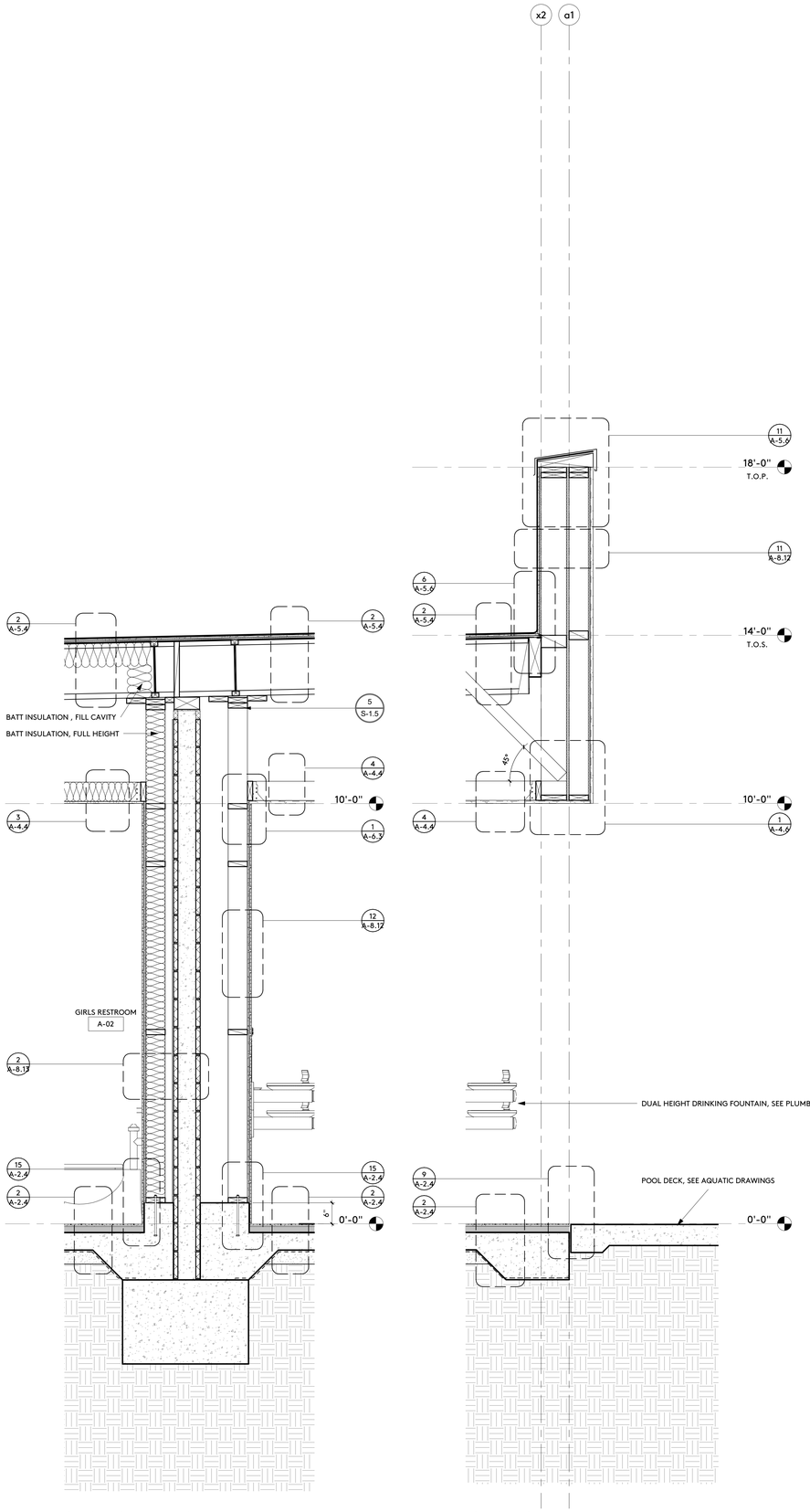

WALL SECTION aB-2 4
3/4" = 1'-0"

WALL SECTION aB-1 3
3/4" = 1'-0"

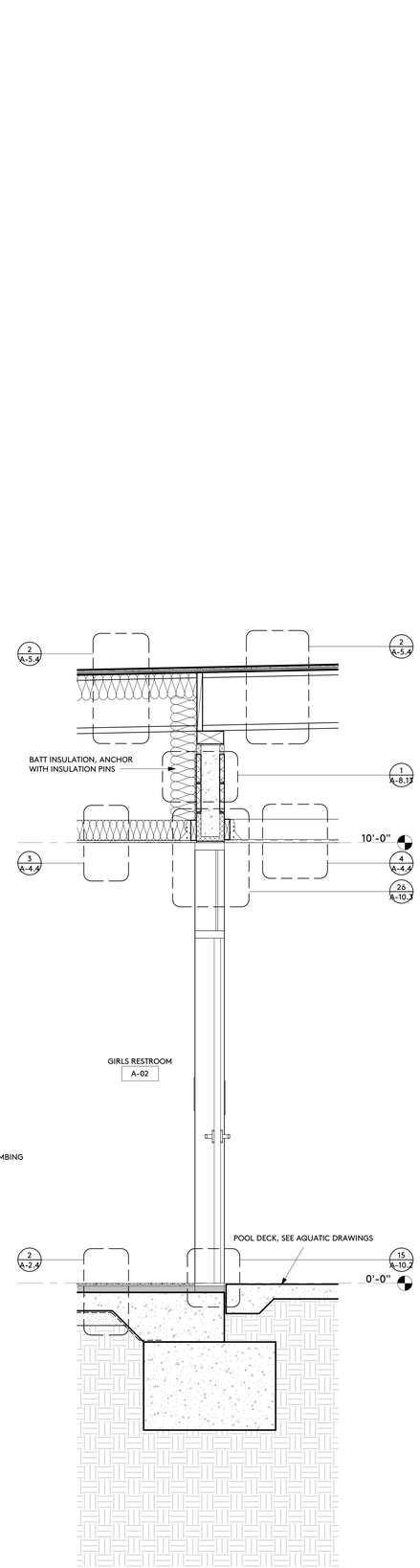

WALL SECTION aA-2 2
3/4" = 1'-0"

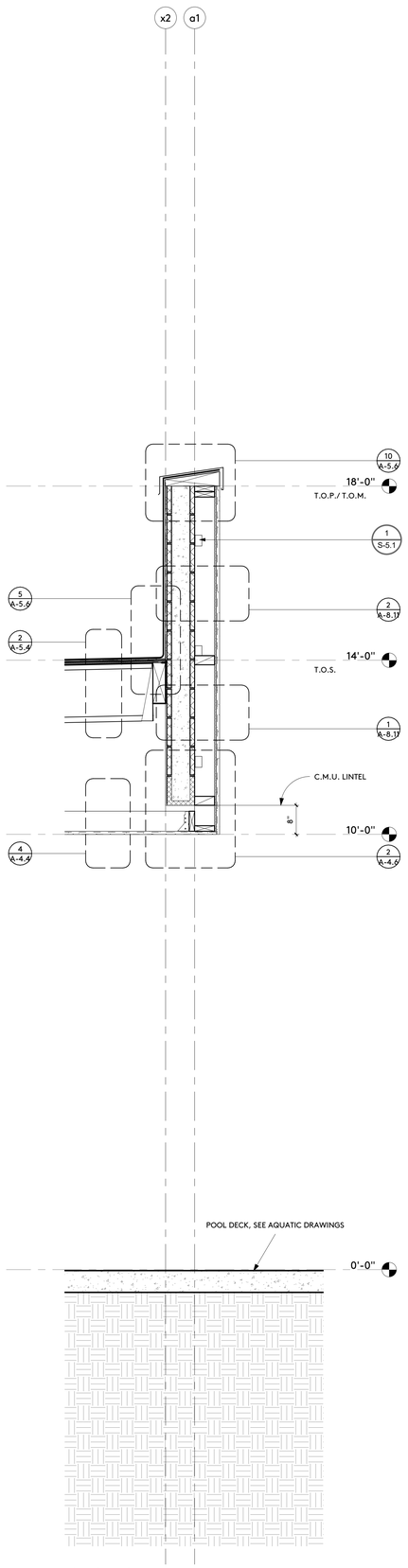

WALL SECTION aA-1 1
3/4" = 1'-0"

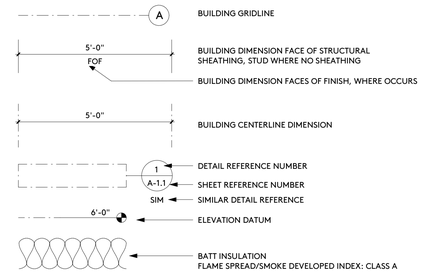

SYMBOLS

IDENTIFICATION STAMP
DIV. OF THE STATE ARCHITECT
APP: 03-122664 INC:
REVIEWED FOR
SS ☑ FLS ☑ ACS ☑
DATE: 05/12/2023

pjhm architects

LICENSED ARCHITECT
THOMAS W. KRUSE
NO. C15585
REN. 02/25
STATE OF CALIFORNIA

HIGHLAND HIGH SCHOOL
50M POOL & AQUATICS CENTER

KERN HIGH SCHOOL DISTRICT

WALL SECTIONS

A-8.0

OC Office: 24461 Ridge Route Drive #100, Laguna Hills, CA 92653 • OC Phone: 949.496.6191 • SD Office: 804 Pier View Way #103, Oceanside, CA 92054 • SD Phone: 760.730.5527 • LA Office: 837 Traction Avenue, #410, Los Angeles, CA 90013 • LA Phone: 213.278.0172 • Web: pjhm.com

4/13/2023 9:05:34 AM

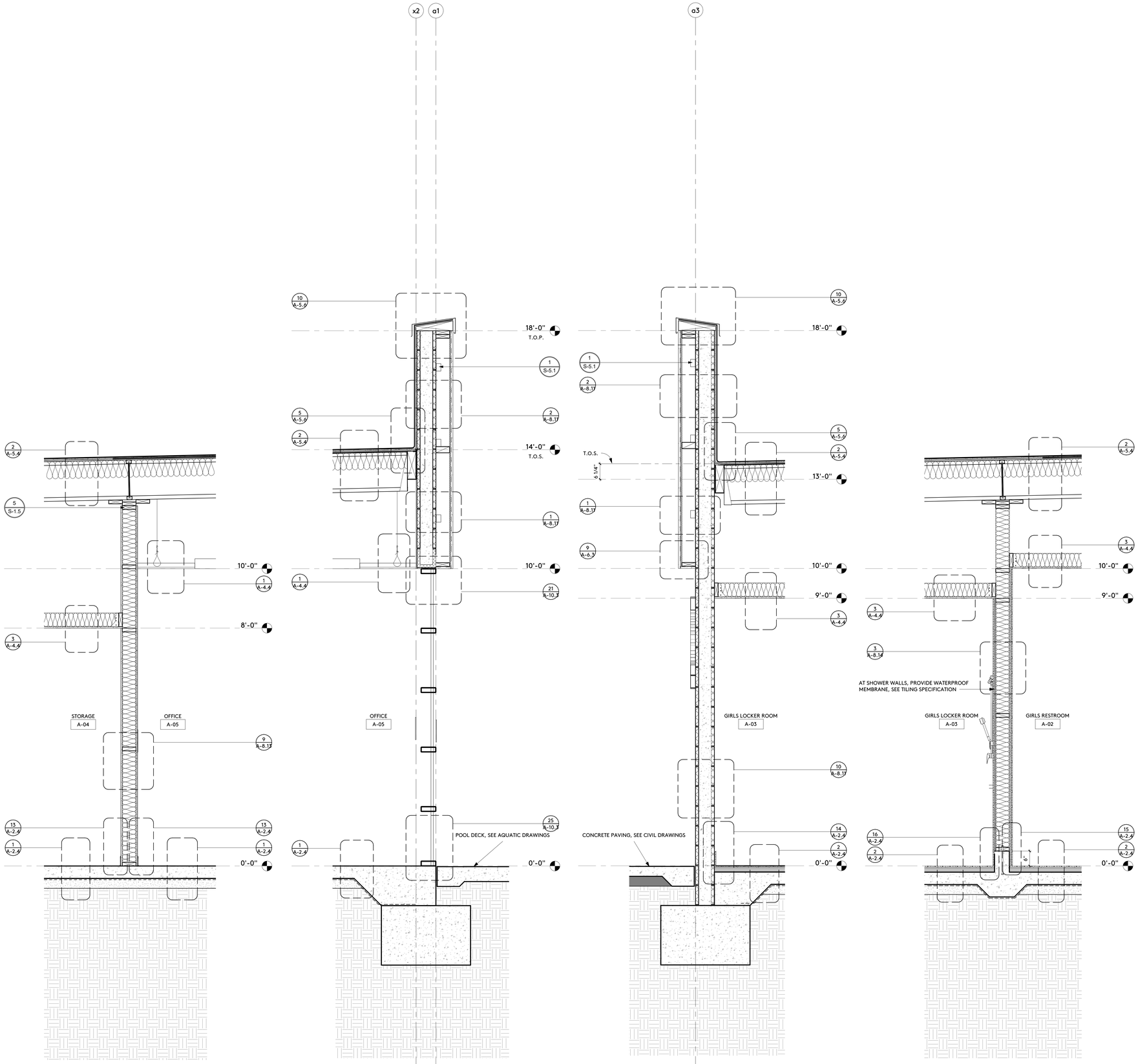

WALL SECTION aC-2 8
3/4" = 1'-0"

WALL SECTION aC-1 7
3/4" = 1'-0"

WALL SECTION aB-4 6
3/4" = 1'-0"

WALL SECTION aB-3 5
3/4" = 1'-0"

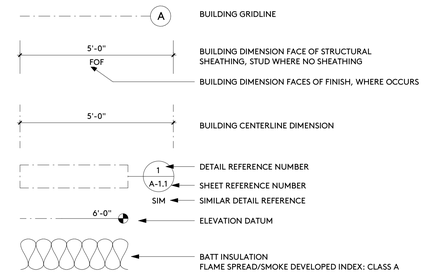

SYMBOLS

IDENTIFICATION STAMP
DIV. OF THE STATE ARCHITECT
APP: 03-122664 INC:
REVIEWED FOR
SS ☑ FLS ☑ ACS ☑
DATE: 05/12/2023

pjhm architects

LICENSED ARCHITECT
THOMAS W. KRUSE
NO. C15585
REN. 02/25
STATE OF CALIFORNIA

HIGHLAND HIGH SCHOOL
50M POOL & AQUATICS CENTER

KERN HIGH SCHOOL DISTRICT

WALL SECTIONS

A-8.1

OC Office: 24461 Ridge Route Drive #100, Laguna Hills, CA 92653 • OC Phone: 949.496.6191 • SD Office: 804 Pier View Way #103, Oceanside, CA 92054 • SD Phone: 760.730.5527 • LA Office: 837 Traction Avenue, #410, Los Angeles, CA 90013 • LA Phone: 213.278.0172 • Web: pjhm.com

4/13/2023 9:05:35 AM

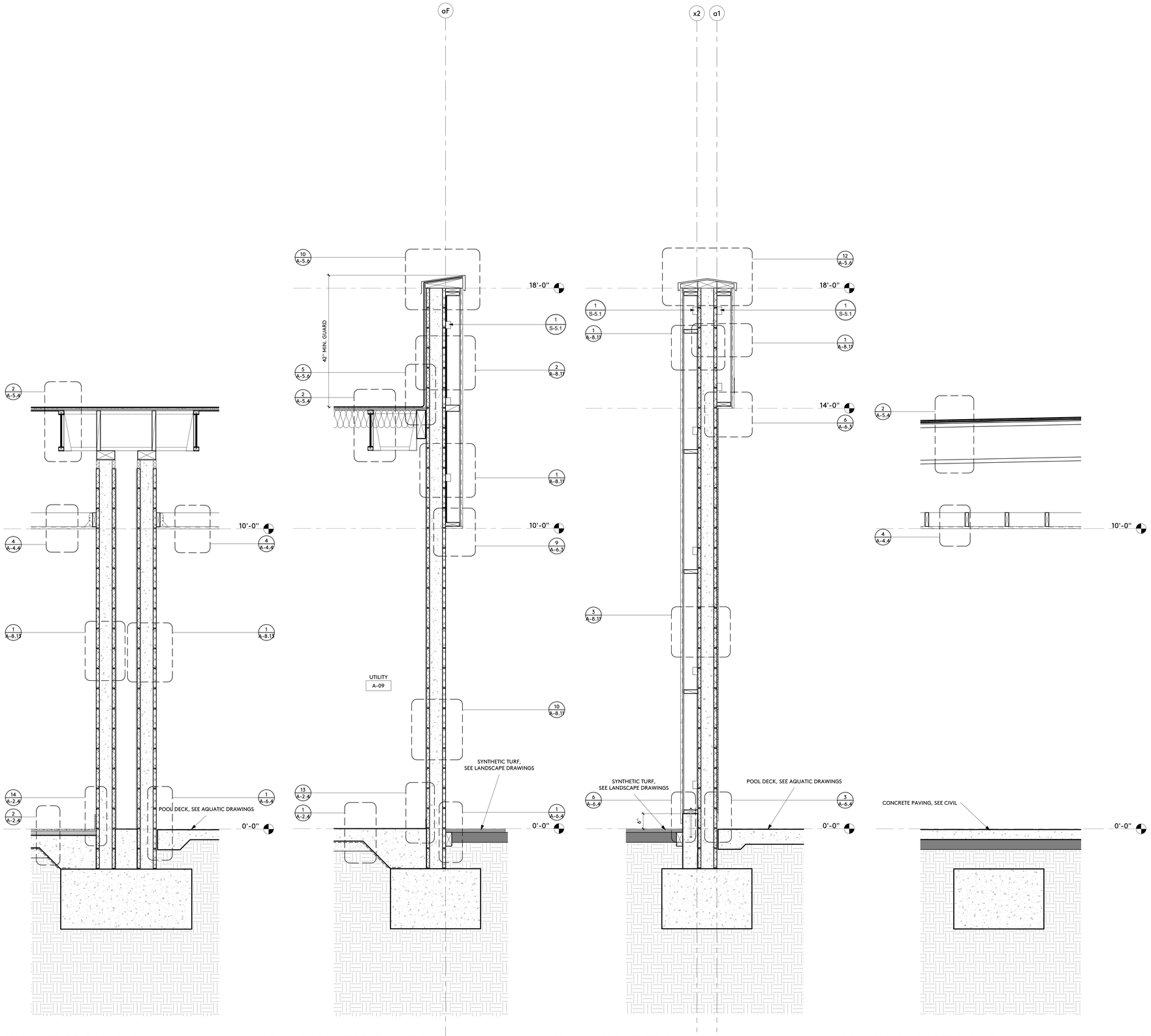

WALL SECTION aF-2 12
3/4" = 1'-0"

WALL SECTION aF-1 11
3/4" = 1'-0"

WALL SECTION aE-1 10
3/4" = 1'-0"

WALL SECTION aD-1 9
3/4" = 1'-0"

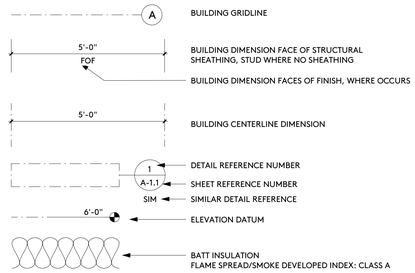

SYMBOLS

IDENTIFICATION STAMP
DIV. OF THE STATE ARCHITECT
APP: 03-122664 INC:
REVIEWED FOR
SS ☑ FLS ☑ ACS ☑
DATE: 05/12/2023

pjhm architects

LICENSED ARCHITECT
THOMAS W. KRUSE
NO. C15585
REN. 02/25
STATE OF CALIFORNIA

HIGHLAND HIGH SCHOOL
50M POOL & AQUATICS CENTER

KERN HIGH SCHOOL DISTRICT

WALL SECTIONS

A-8.2

OC Office: 24461 Ridge Route Drive #100, Laguna Hills, CA 92653 • OC Phone: 949.496.6191 • SD Office: 804 Pier View Way #103, Oceanside, CA 92054 • SD Phone: 760.730.5527 • LA Office: 837 Traction Avenue, #410, Los Angeles, CA 90013 • LA Phone: 213.278.0172 • Web: pjhm.com

4/13/2023 11:27:07 AM

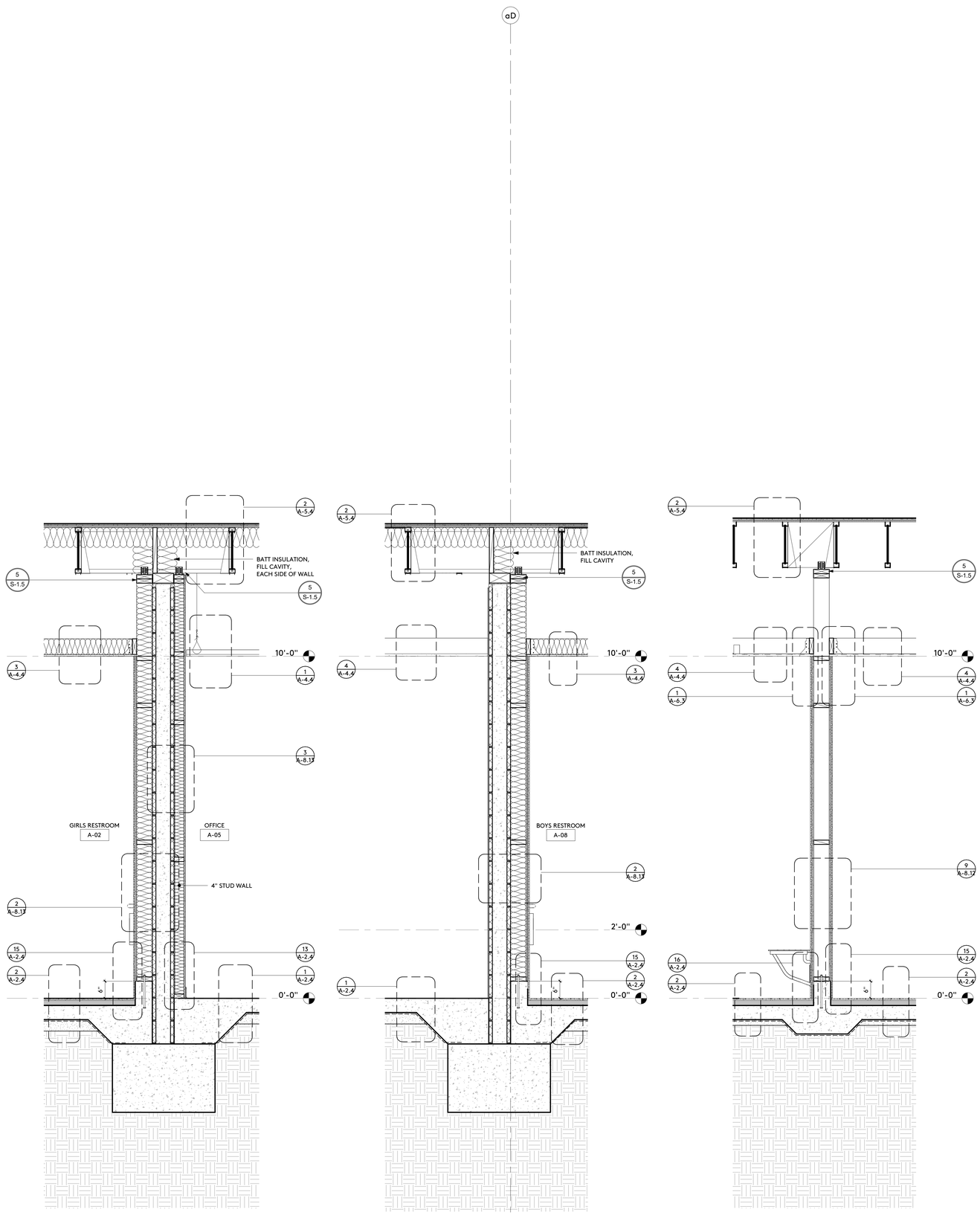

WALL SECTION aG-2 15
3/4" = 1'-0"

WALL SECTION aG-1 14
3/4" = 1'-0"

WALL SECTION aF-3 13
3/4" = 1'-0"

A — BUILDING GRIDLINE

5'-0" FOF — BUILDING DIMENSION FACE OF STRUCTURAL SHEATHING, STUD WHERE NO SHEATHING; BUILDING DIMENSION FACES OF FINISH, WHERE OCCURS

5'-0" — BUILDING CENTERLINE DIMENSION

1 / A-1.1 — DETAIL REFERENCE NUMBER; SHEET REFERENCE NUMBER

SIM — SIMILAR DETAIL REFERENCE

6'-0" — ELEVATION DATUM

BATT INSULATION
FLAME SPREAD/SMOKE DEVELOPED INDEX: CLASS A

SYMBOLS
1/2" = 1'-0"

IDENTIFICATION STAMP
DIV. OF THE STATE ARCHITECT
APP: 03-122664 INC:
REVIEWED FOR
SS ☑ FLS ☑ ACS ☑
DATE: 05/12/2023

pjhm architects

LICENSED ARCHITECT
RICHARD W. PRIMUS
NO. C15585
REN. 02/25
STATE OF CALIFORNIA

OC Office: 24461 Ridge Route Drive #100, Laguna Hills, CA 92653 • OC Phone: 949.496.6191 • SD Office: 804 Pier View Way #103, Oceanside, CA 92054 • SD Phone: 760.730.5527 • LA Office: 837 Traction Avenue, #410, Los Angeles, CA 90013 • LA Phone: 213.278.0172 • Web: pjhm.com

HIGHLAND HIGH SCHOOL
50M POOL & AQUATICS CENTER

KERN HIGH SCHOOL DISTRICT

WALL SECTIONS

A-8.3

4/13/2023 9:05:37 AM

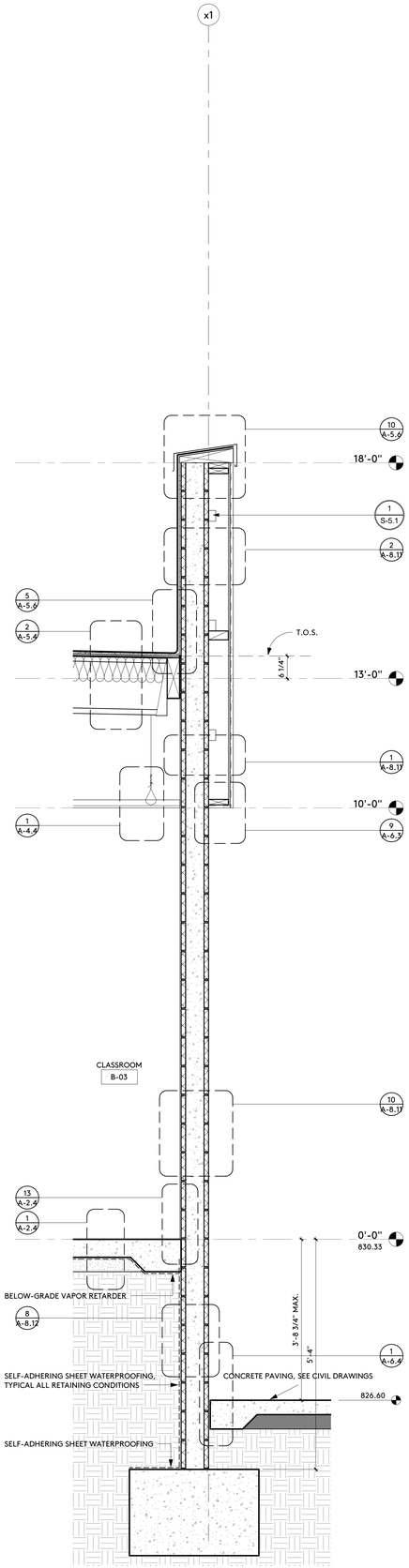

WALL SECTION bB-1 20

3/4" = 1'-0"

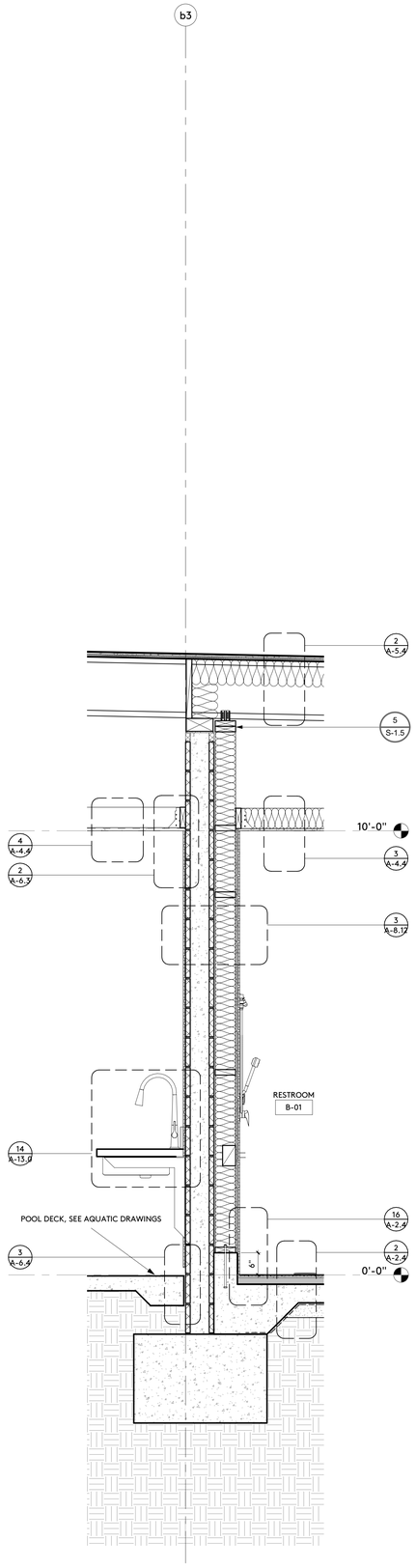

WALL SECTION bA-3 19

3/4" = 1'-0"

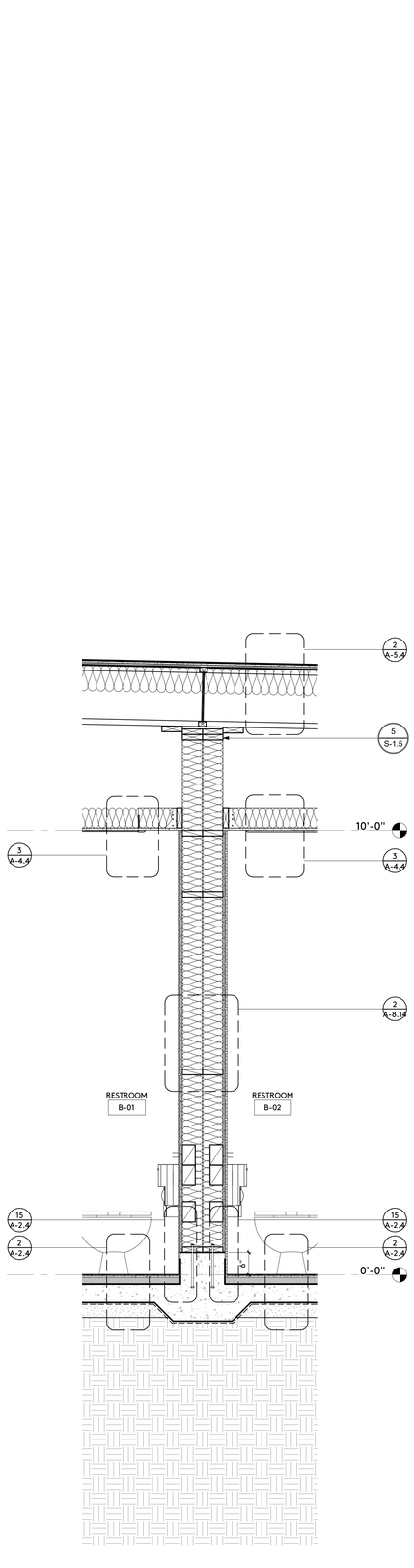

WALL SECTION bA-2 18

3/4" = 1'-0"

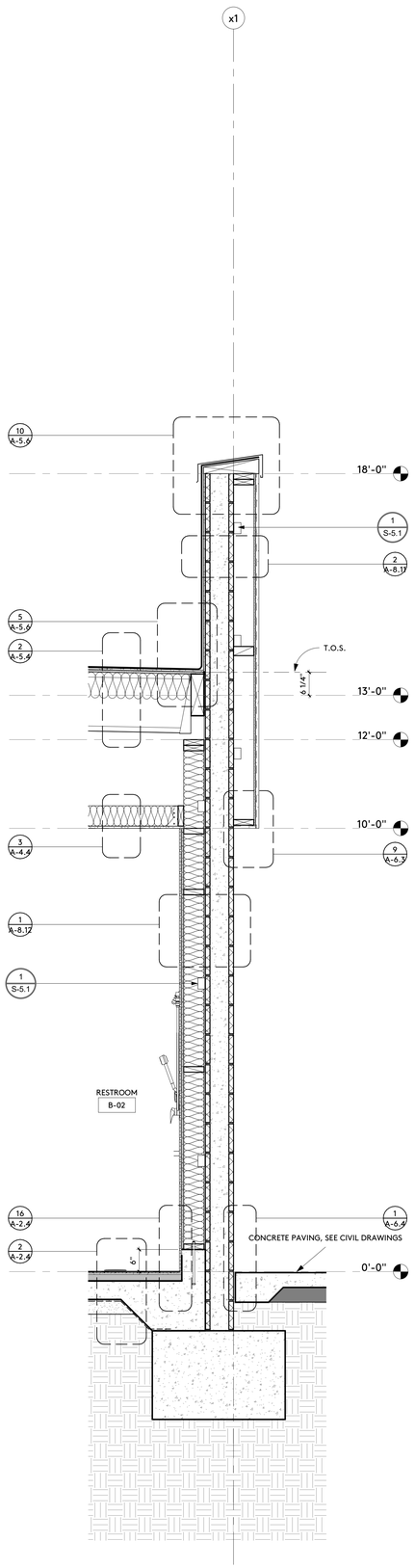

WALL SECTION bA-1 17

3/4" = 1'-0"

SYMBOLS

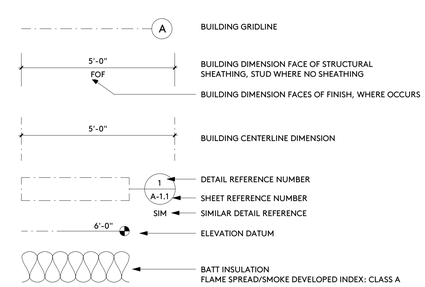

IDENTIFICATION STAMP
DIV. OF THE STATE ARCHITECT
APP: 03-122664 INC:
REVIEWED FOR
SS ☑ FLS ☑ ACS ☑
DATE: 05/12/2023

pjhm architects

LICENSED ARCHITECT
RICHARD W. PRIEST
NO. C15585
REN. 02/25
STATE OF CALIFORNIA

OC Office: 24461 Ridge Route Drive #100, Laguna Hills, CA 92653 • OC Phone: 949.496.6191 • SD Office: 804 Pier View Way #103, Oceanside, CA 92054 • SD Phone: 760.730.5527 • LA Office: 837 Traction Avenue, #410, Los Angeles, CA 90013 • LA Phone: 213.278.0172 • Web: pjhm.com

HIGHLAND HIGH SCHOOL
50M POOL & AQUATICS CENTER

KERN HIGH SCHOOL DISTRICT

WALL SECTIONS

A-8.4

4/13/2023 9:05:38 AM

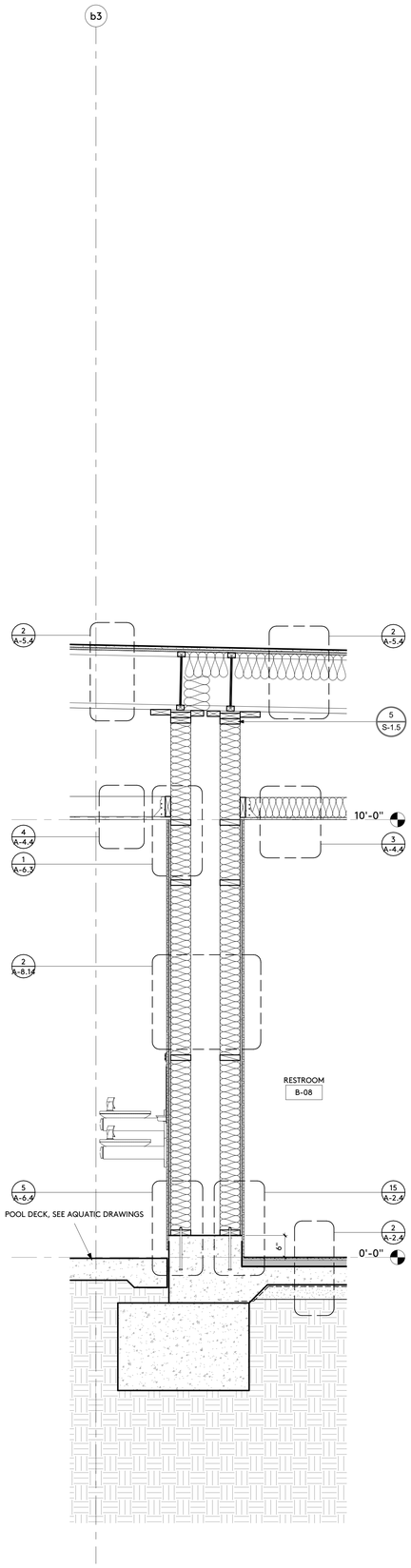

WALL SECTION bE-2 24
3/4" = 1'-0"

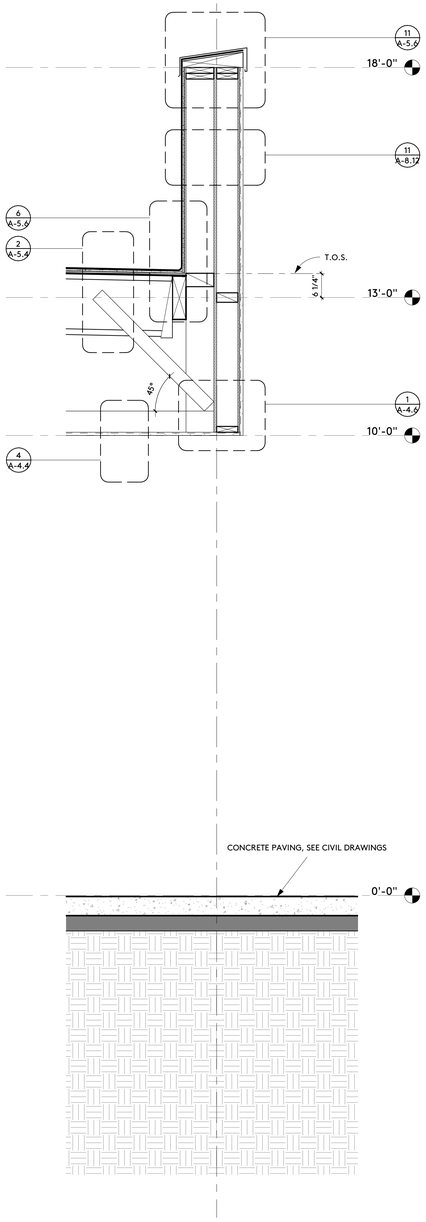

WALL SECTION bE-1 23
3/4" = 1'-0"

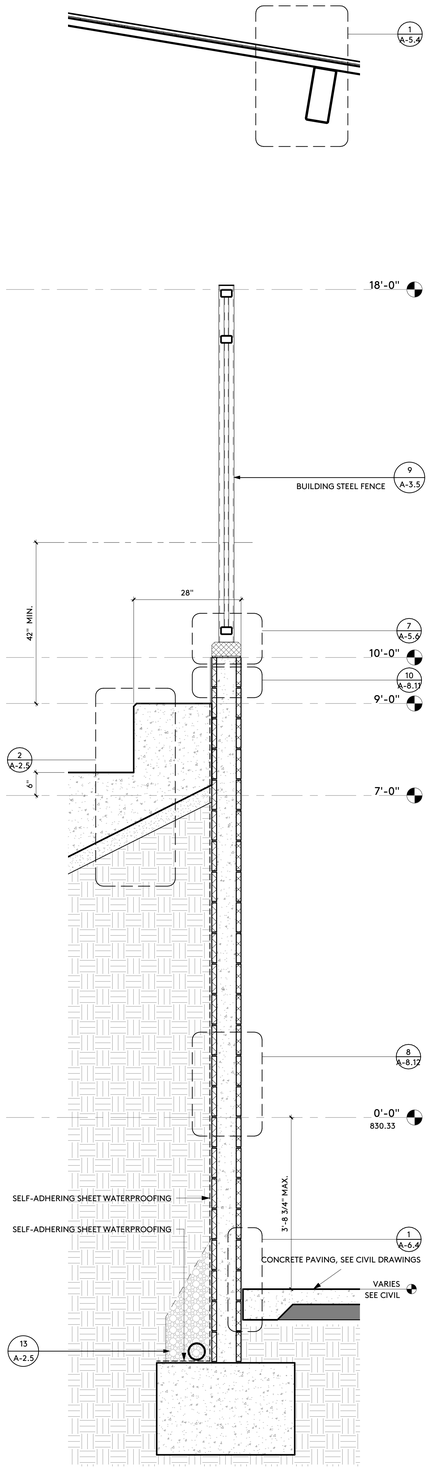

WALL SECTION bD-1 22
3/4" = 1'-0"

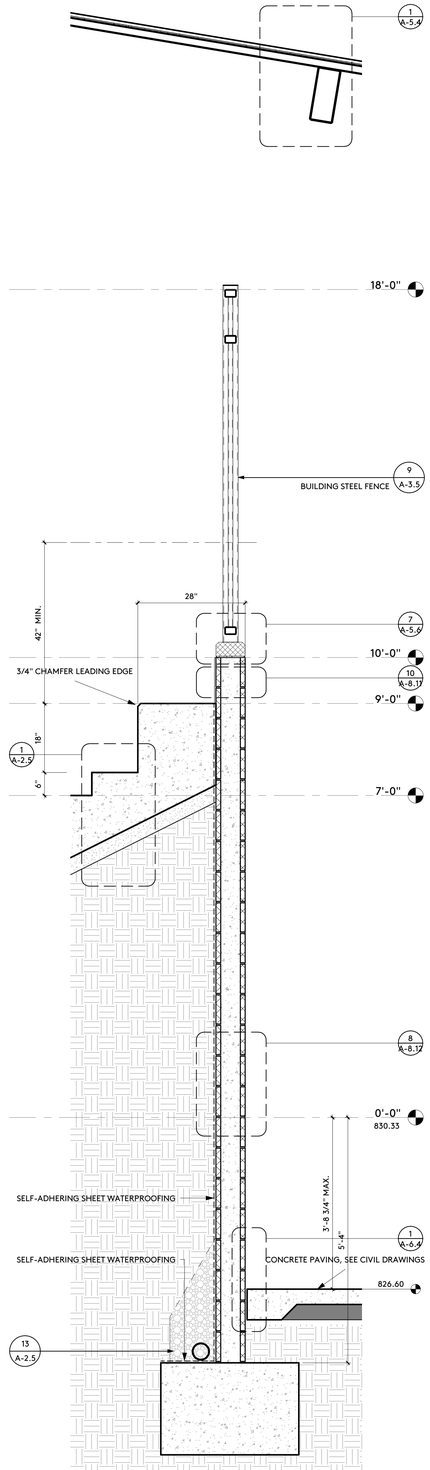

WALL SECTION bC-1 21
3/4" = 1'-0"

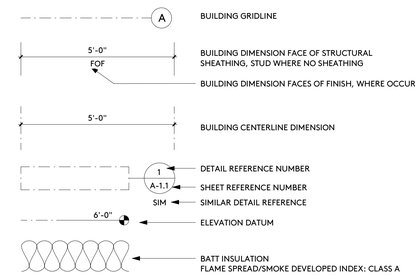

SYMBOLS

IDENTIFICATION STAMP
DIV. OF THE STATE ARCHITECT
APP: 03-122664 INC:
REVIEWED FOR
SS ☑ FLS ☑ ACS ☑
DATE: 05/12/2023

pjhm architects

LICENSED ARCHITECT
THOMAS W. KRUSE
NO. C15585
REN. 02/25
STATE OF CALIFORNIA

HIGHLAND HIGH SCHOOL
50M POOL & AQUATICS CENTER

KERN HIGH SCHOOL DISTRICT

WALL SECTIONS

A-8.5

OC Office: 24461 Ridge Route Drive #100, Laguna Hills, CA 92653 • OC Phone: 949.496.6191 • SD Office: 804 Pier View Way #103, Oceanside, CA 92054 • SD Phone: 760.730.5527 • LA Office: 837 Traction Avenue, #410, Los Angeles, CA 90013 • LA Phone: 213.278.0172 • Web: pjhm.com

4/13/2023 9:05:40 AM

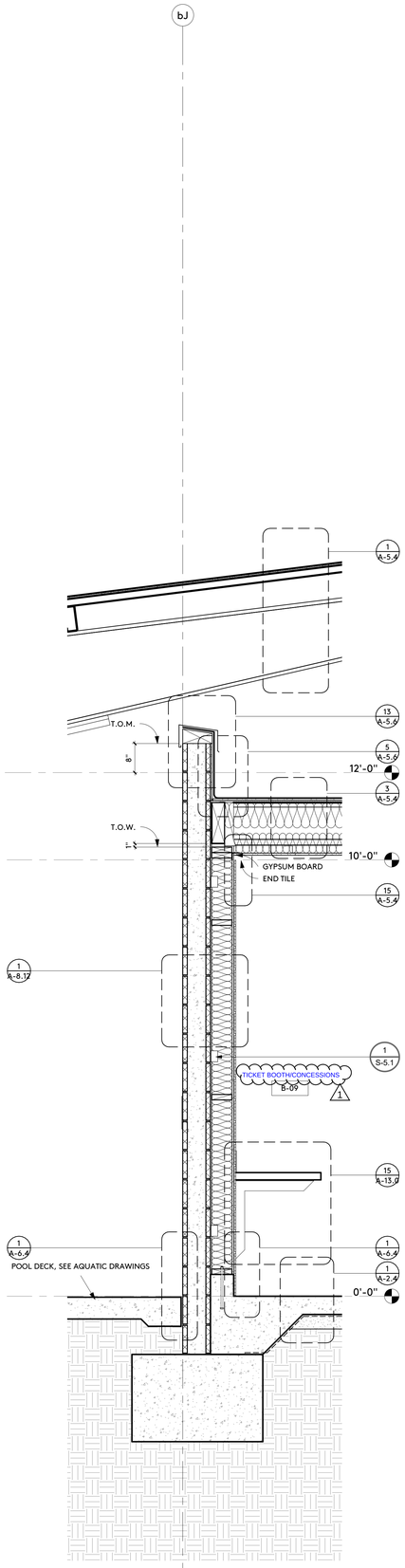

WALL SECTION bH-2 28

3/4" = 1'-0"

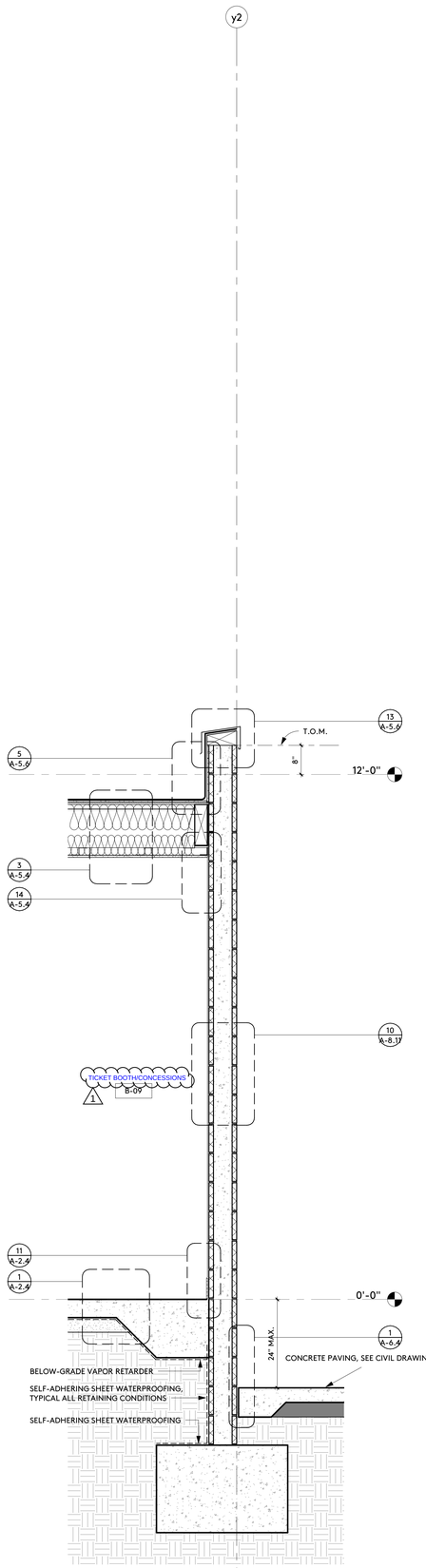

WALL SECTION bH-1 27

3/4" = 1'-0"

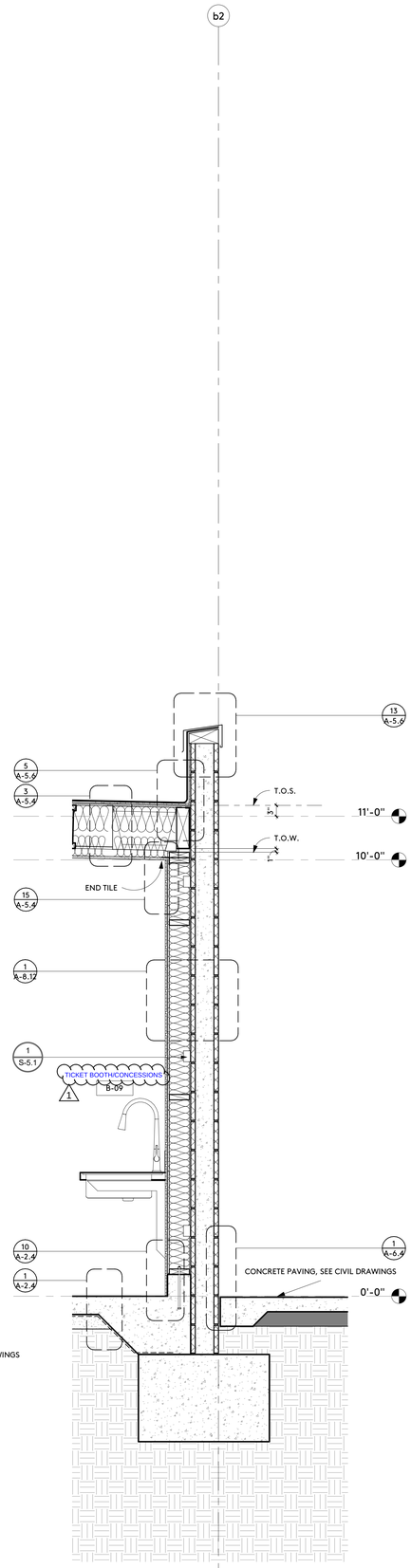

WALL SECTION bG-1 26

3/4" = 1'-0"

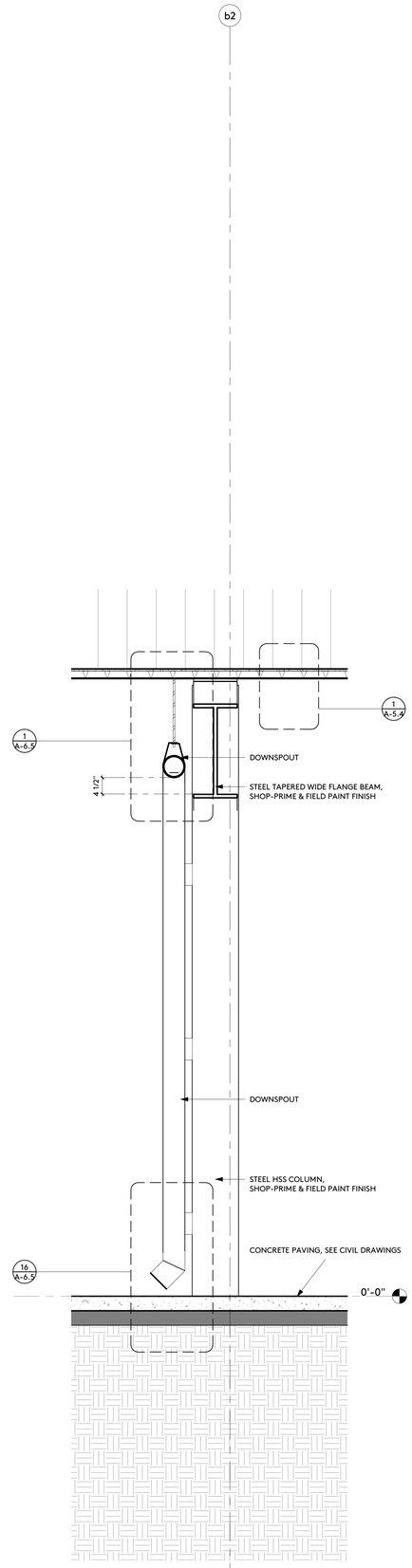

WALL SECTION bF-1 25

3/4" = 1'-0"

SYMBOLS

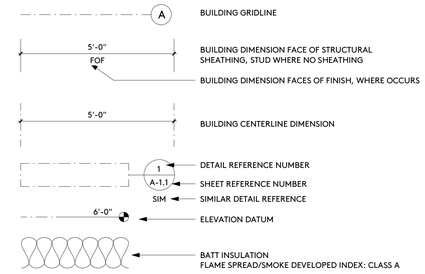

IDENTIFICATION STAMP
DIV. OF THE STATE ARCHITECT
APP: 03-122664 INC:
REVIEWED FOR
SS ☑ FLS ☑ ACS ☑
DATE: 05/12/2023

pjhm architects

LICENSED ARCHITECT
RICHARD W. FRUIN
NO. C15585
REN. 02/25
STATE OF CALIFORNIA

OC Office: 24461 Ridge Route Drive #100, Laguna Hills, CA 92653 • OC Phone: 949.496.6191 • SD Office: 804 Pier View Way #103, Oceanside, CA 92054 • SD Phone: 760.730.5527 • LA Office: 837 Traction Avenue, #410, Los Angeles, CA 90013 • LA Phone: 213.278.0172 • Web: pjhm.com

HIGHLAND HIGH SCHOOL
50M POOL & AQUATICS CENTER

KERN HIGH SCHOOL DISTRICT

1 ADDENDUM NO. 1

WALL SECTIONS

A-8.6

4/13/2023 9:05:41 AM

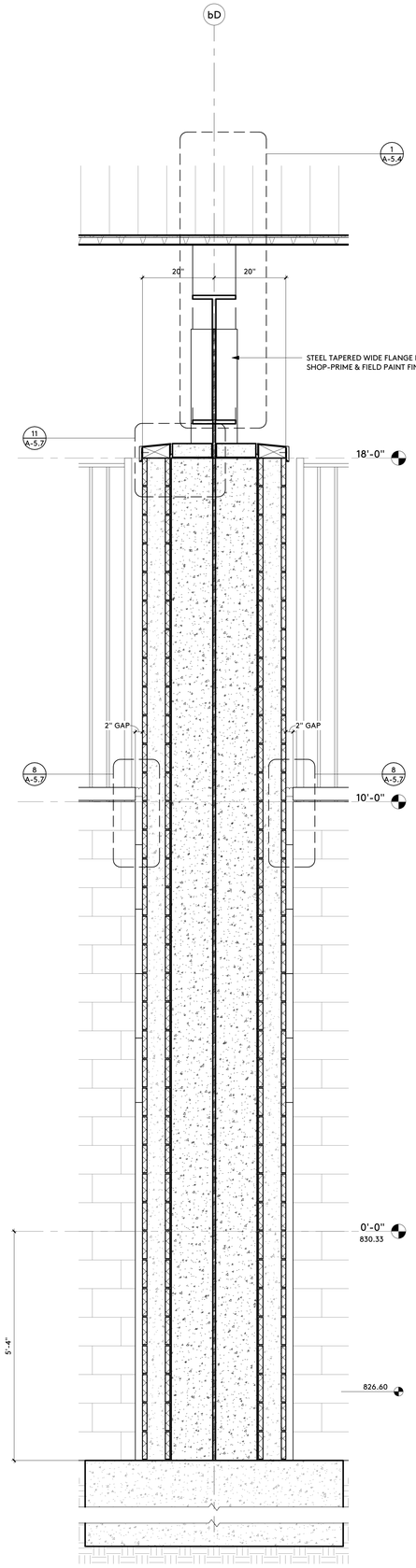

WALL SECTION bJ-1 32
3/4" = 1'-0"

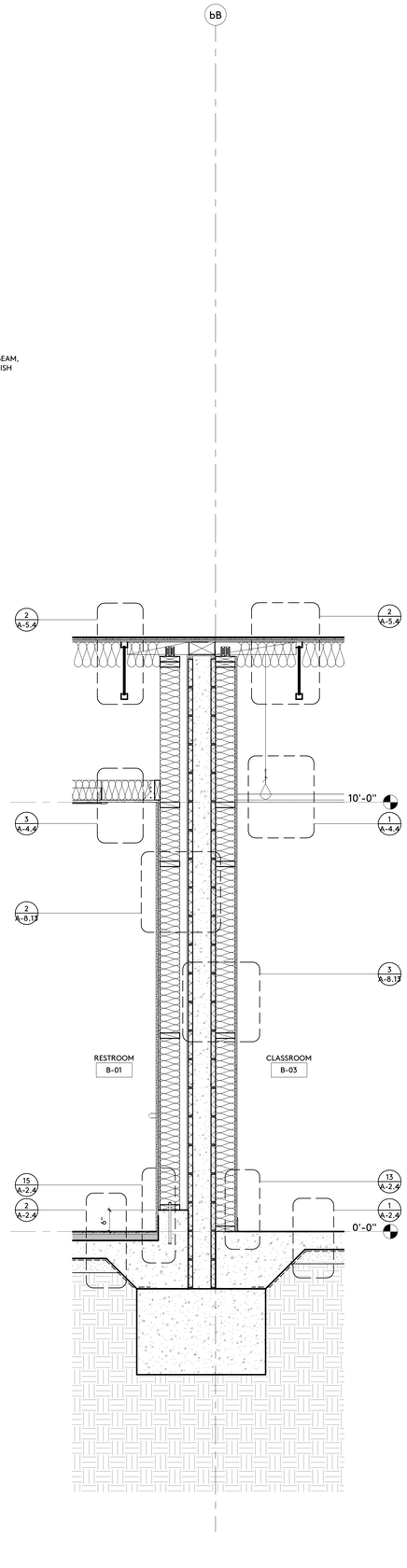

WALL SECTION bH-5 31
3/4" = 1'-0"

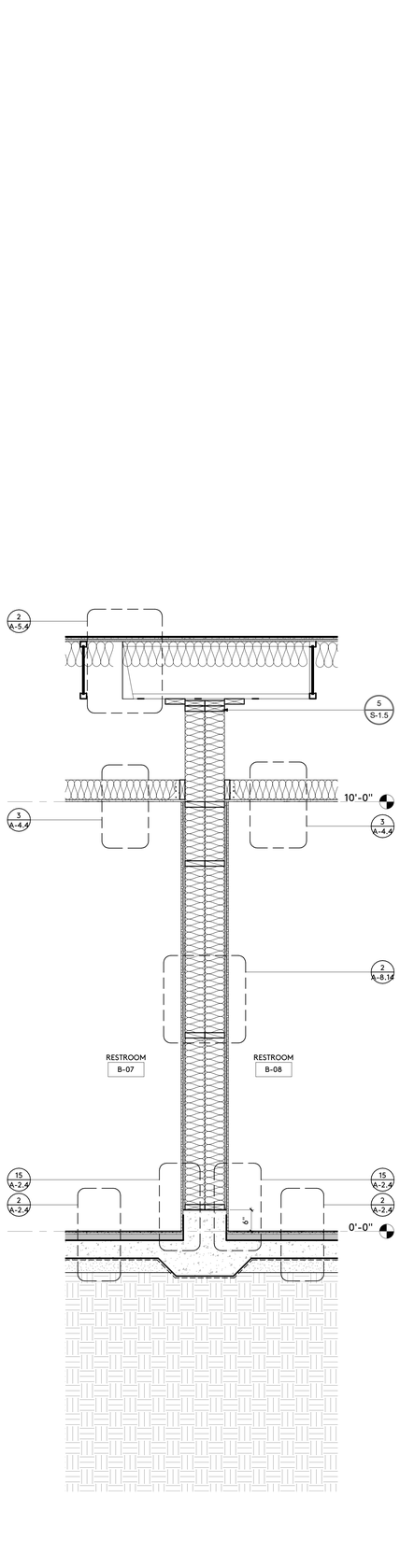

WALL SECTION bH-4 30
3/4" = 1'-0"

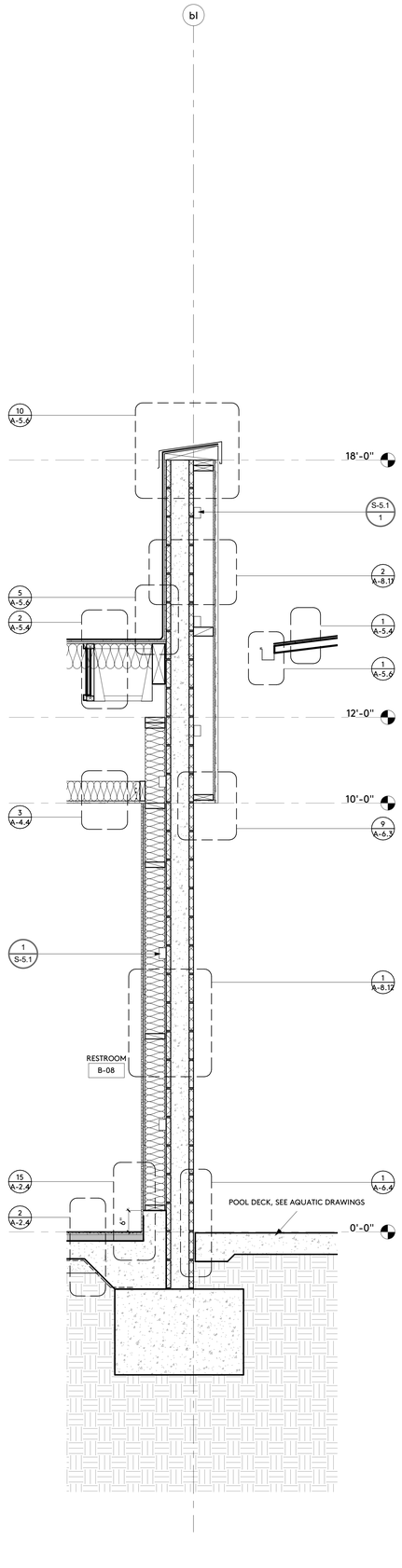

WALL SECTION bH-3 29
3/4" = 1'-0"

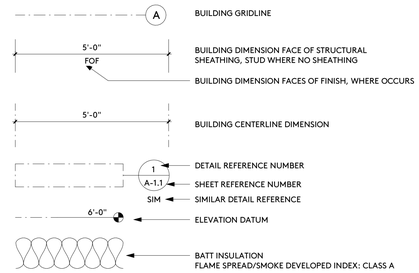

SYMBOLS

IDENTIFICATION STAMP
DIV. OF THE STATE ARCHITECT
APP: 03-122664 INC:
REVIEWED FOR
SS ☑ FLS ☑ ACS ☑
DATE: 05/12/2023

pjhm architects

LICENSED ARCHITECT
THOMAS W. KRUSE
NO. C15585
REN. 02/25
STATE OF CALIFORNIA

HIGHLAND HIGH SCHOOL
50M POOL & AQUATICS CENTER

KERN HIGH SCHOOL DISTRICT

WALL SECTIONS

A-8.7

OC Office: 24461 Ridge Route Drive #100, Laguna Hills, CA 92653 • OC Phone: 949.496.6191 • SD Office: 804 Pier View Way #103, Oceanside, CA 92054 • SD Phone: 760.730.5527 • LA Office: 837 Traction Avenue, #410, Los Angeles, CA 90013 • LA Phone: 213.278.0172 • Web: pjhm.com

4/13/2023 9:05:42 AM

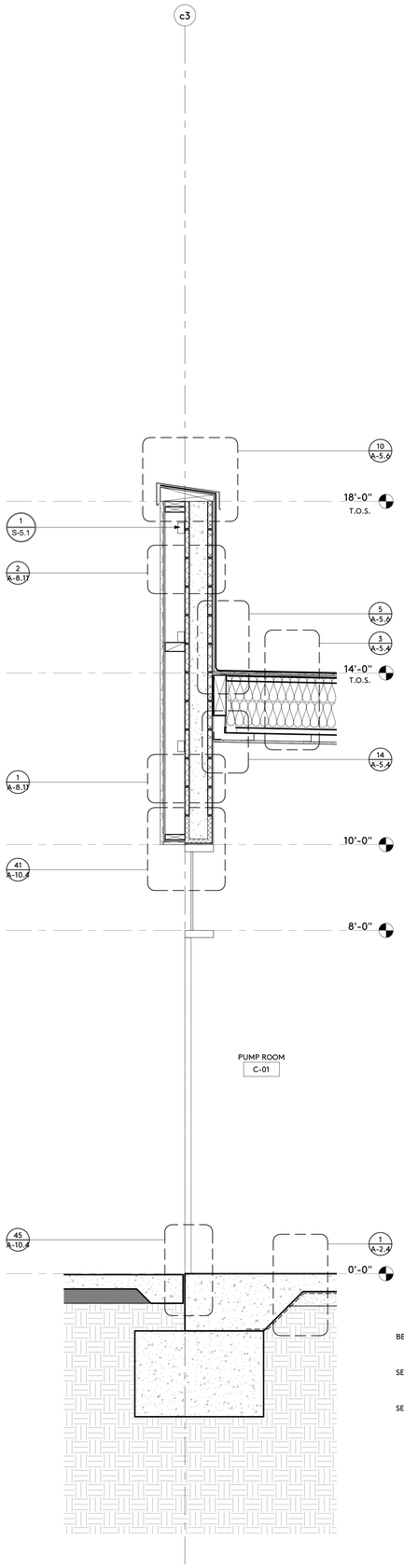

WALL SECTION cA-3 36

3/4" = 1'-0"

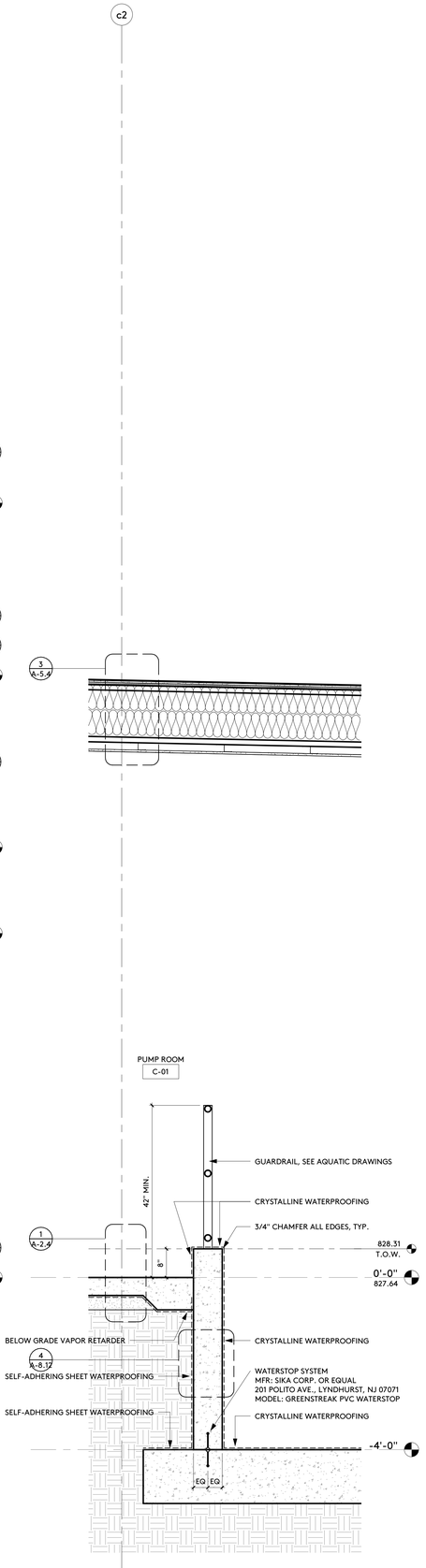

WALL SECTION cA-2 35

3/4" = 1'-0"

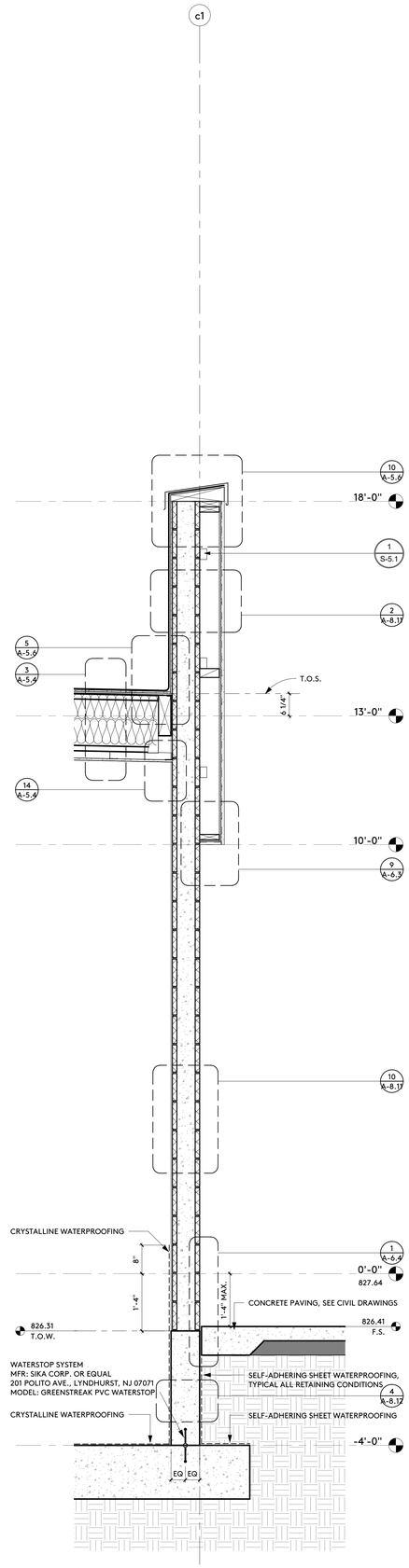

WALL SECTION cA-1 34

3/4" = 1'-0"

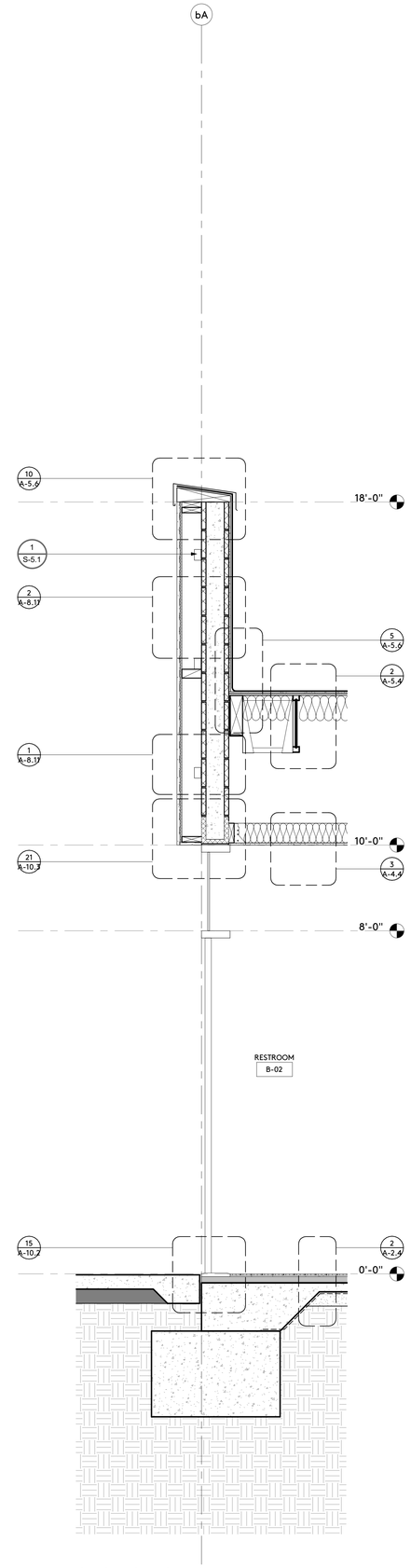

WALL SECTION bJ-2 33

3/4" = 1'-0"

SYMBOLS

- A — BUILDING GRIDLINE
- 5'-0" FOF — BUILDING DIMENSION FACE OF STRUCTURAL SHEATHING, STUD WHERE NO SHEATHING
  BUILDING DIMENSION FACES OF FINISH, WHERE OCCURS
- 5'-0" — BUILDING CENTERLINE DIMENSION
- 1 / A-1.1 — DETAIL REFERENCE NUMBER; SHEET REFERENCE NUMBER
  SIM — SIMILAR DETAIL REFERENCE
- 6'-0" — ELEVATION DATUM
- BATT INSULATION
  FLAME SPREAD/SMOKE DEVELOPED INDEX: CLASS A

IDENTIFICATION STAMP
DIV. OF THE STATE ARCHITECT
APP: 03-122664 INC:
REVIEWED FOR
SS ☑ FLS ☑ ACS ☑
DATE: 05/12/2023

pjhm architects

LICENSED ARCHITECT
RICHARD W. PRIMUS
NO. C15585
REN. 02/25
STATE OF CALIFORNIA

OC Office: 24461 Ridge Route Drive #100, Laguna Hills, CA 92653 • OC Phone: 949.496.6191 • SD Office: 804 Pier View Way #103, Oceanside, CA 92054 • SD Phone: 760.730.5527 • LA Office: 837 Traction Avenue, #410, Los Angeles, CA 90013 • LA Phone: 213.278.0172 • Web: pjhm.com

HIGHLAND HIGH SCHOOL
50M POOL & AQUATICS CENTER

KERN HIGH SCHOOL DISTRICT

WALL SECTIONS

A-8.8

4/13/2023 9:05:43 AM

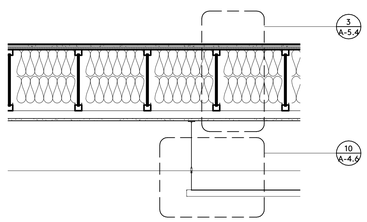

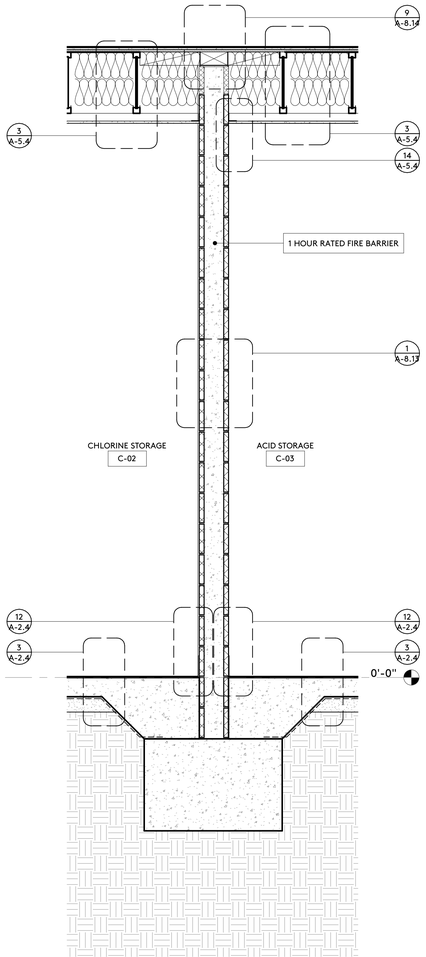

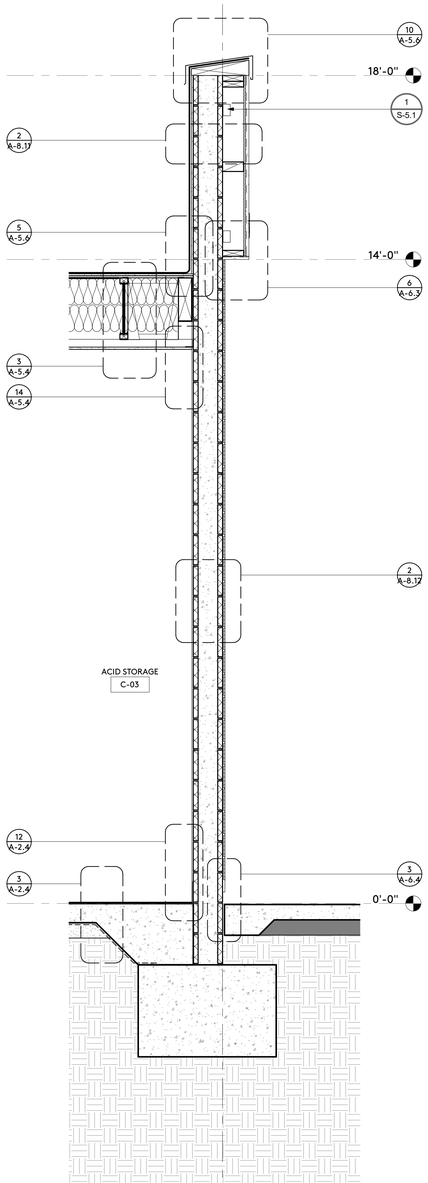

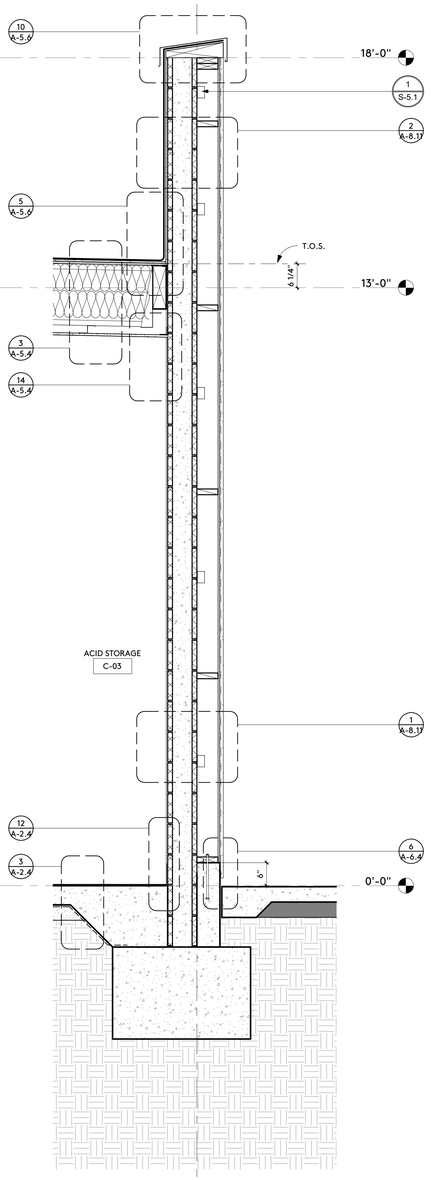

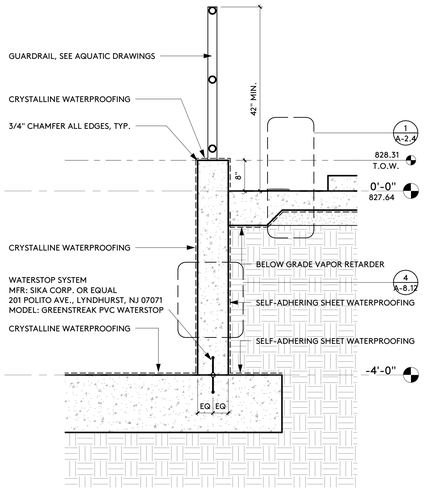

WALL SECTION cC-3 40
3/4" = 1'-0"

WALL SECTION cC-2 39
3/4" = 1'-0"

WALL SECTION cC-1 38
3/4" = 1'-0"

WALL SECTION cB-1 37
3/4" = 1'-0"

SYMBOLS

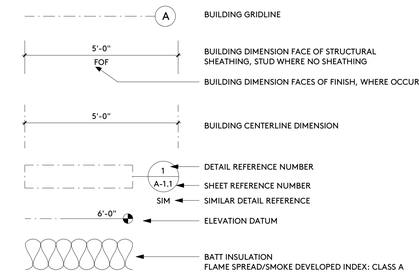

IDENTIFICATION STAMP
DIV. OF THE STATE ARCHITECT
APP: 03-122664 INC:
REVIEWED FOR
SS ☑ FLS ☑ ACS ☑
DATE: 05/12/2023

pjhm architects

LICENSED ARCHITECT
RICHARD W. PRIEBE
NO. C15585
REN. 02/25
STATE OF CALIFORNIA

OC Office: 24461 Ridge Route Drive #100, Laguna Hills, CA 92653 • SD Phone: 760.730.5527 • LA Office: 837 Traction Avenue, #410, Los Angeles, CA 90013 • LA Phone: 213.278.0172 • SD Office: 804 Pier View Way #103, Oceanside, CA 92054 • OC Phone: 949.496.6191 • Web: pjhm.com

HIGHLAND HIGH SCHOOL
50M POOL & AQUATICS CENTER

KERN HIGH SCHOOL DISTRICT

WALL SECTIONS

A-8.9

4/13/2023 9:05:44 AM

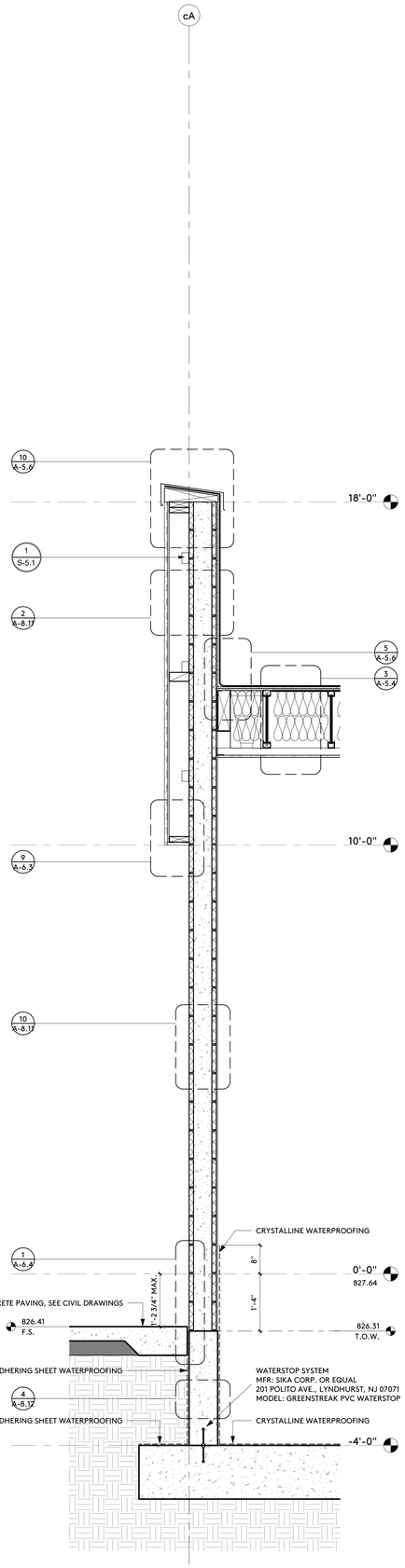

WALL SECTION cC-5 42

3/4" = 1'-0"

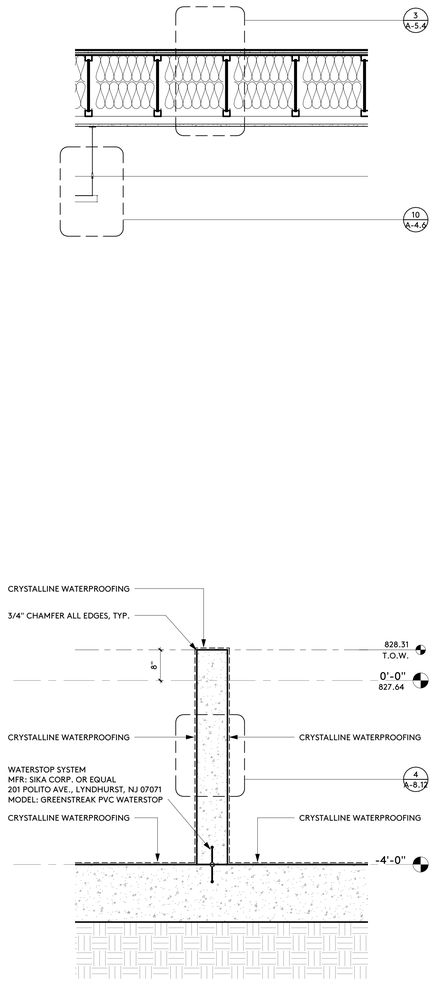

WALL SECTION cC-4 41

3/4" = 1'-0"

SYMBOLS

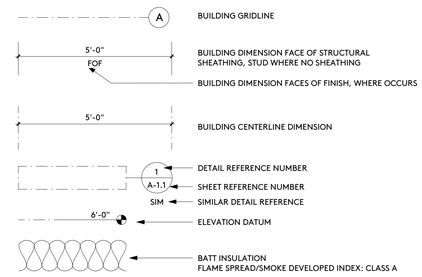

IDENTIFICATION STAMP
DIV. OF THE STATE ARCHITECT
APP: 03-122664 INC:
REVIEWED FOR
SS ☑ FLS ☑ ACS ☑
DATE: 05/12/2023

pjhm architects

LICENSED ARCHITECT
RICHARD W. FRUIN
NO. C15585
REN. 02/25
STATE OF CALIFORNIA

OC Office: 24461 Ridge Route Drive #100, Laguna Hills, CA 92653 • OC Phone: 949.496.6191 • SD Office: 804 Pier View Way #103, Oceanside, CA 92054 • SD Phone: 760.730.5527 • LA Office: 837 Traction Avenue, #410, Los Angeles, CA 90013 • LA Phone: 213.278.0172 • Web: pjhm.com

HIGHLAND HIGH SCHOOL
50M POOL & AQUATICS CENTER

KERN HIGH SCHOOL DISTRICT

WALL SECTIONS

A-8.10

4/13/2023 9:05:44 AM

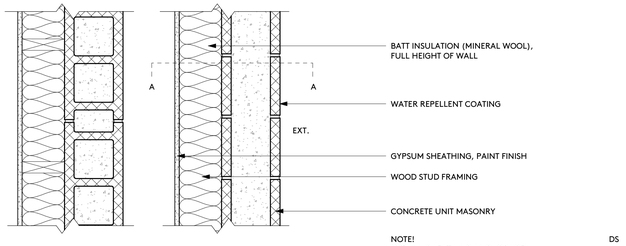

SECTION A-A
PLAN VIEW

EXTERIOR WALL ASSEMBLY

NOTE!
GYPSUM SHEATHING ANCHORAGE:
MIN. NO. 6 x 1-1/4" TYPE W DRYWALL SCREWS
STUD SPACING: 16" MAX.
FASTENER SPACING: 8" EDGE/12" FIELD
INSTALL IN ACCORDANCE WITH ICC ESR-1338

DS

EXTERIOR WALL ASSEMBLY 9

1 1/2" = 1'-0"

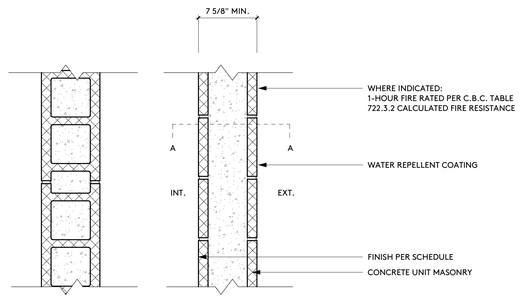

SECTION A-A
PLAN VIEW

EXTERIOR WALL ASSEMBLY

DS

EXTERIOR WALL ASSEMBLY 10

1 1/2" = 1'-0"

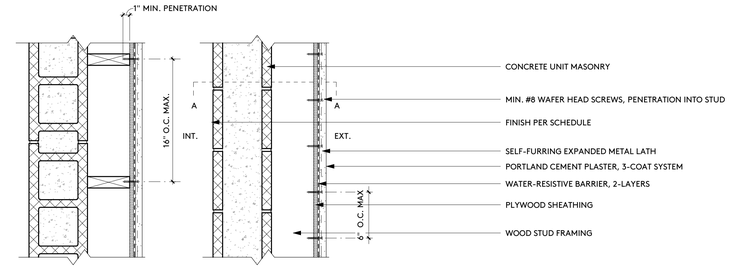

SECTION A-A

EXTERIOR WALL ASSEMBLY

PORTLAND CEMENT PLASTER
LISTING NO.: ICC-ES ESR-2564

DS

EXTERIOR WALL ASSEMBLY 1

1 1/2" = 1'-0"

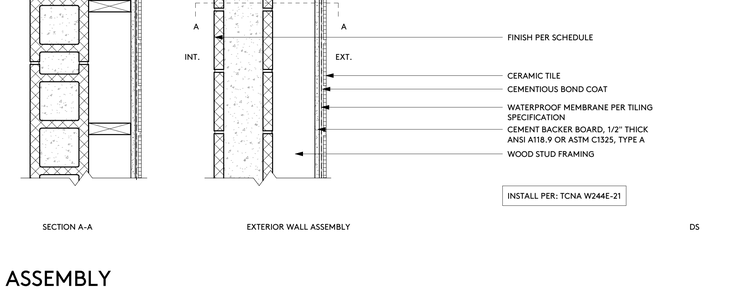

SECTION A-A

EXTERIOR WALL ASSEMBLY

PORTLAND CEMENT PLASTER
LISTING NO.: ICC-ES ESR-2564

DS

EXTERIOR WALL ASSEMBLY 2

1 1/2" = 1'-0"

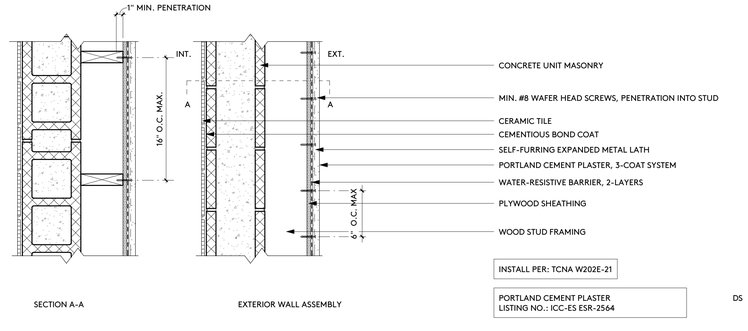

INSTALL PER: TCNA W202E-21

PORTLAND CEMENT PLASTER
LISTING NO.: ICC-ES ESR-2564

SECTION A-A

EXTERIOR WALL ASSEMBLY

DS

EXTERIOR WALL ASSEMBLY 3

1 1/2" = 1'-0"

INSTALL PER: TCNA W244E-21

SECTION A-A

EXTERIOR WALL ASSEMBLY

DS

EXTERIOR WALL ASSEMBLY 4

1 1/2" = 1'-0"

IDENTIFICATION STAMP
DIV. OF THE STATE ARCHITECT
APP: 03-122664 INC:
REVIEWED FOR
SS ☑ FLS ☑ ACS ☑
DATE: 05/12/2023

pjhm architects

LICENSED ARCHITECT
RICHARD W. FRIEND
NO. C15585
REN. 02/25
STATE OF CALIFORNIA

OC Office: 24461 Ridge Route Drive #100, Laguna Hills, CA 92653 • LA Office: 837 Traction Avenue, #410, Los Angeles, CA 90013 • SD Office: 804 Pier View Way #103, Oceanside, CA 92054
OC Phone: 949.496.6191 • LA Phone: 213.278.0172 • SD Phone: 760.730.5527 • Web: pjhm.com

HIGHLAND HIGH SCHOOL
50M POOL & AQUATICS CENTER

KERN HIGH SCHOOL DISTRICT

WALL SECTION DETAILS

A-8.11

4/13/2023 9:05:45 AM

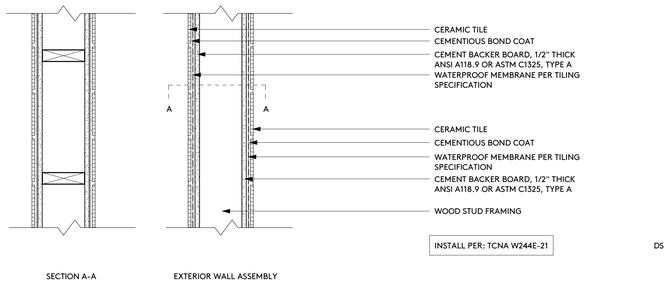

EXTERIOR WALL ASSEMBLY 9

1 1/2" = 1'-0"

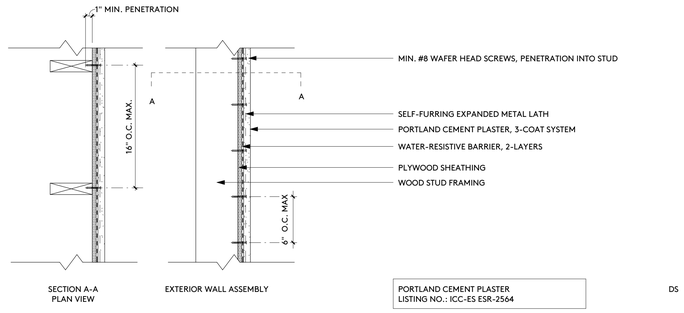

EXTERIOR WALL ASSEMBLY 10

1 1/2" = 1'-0"

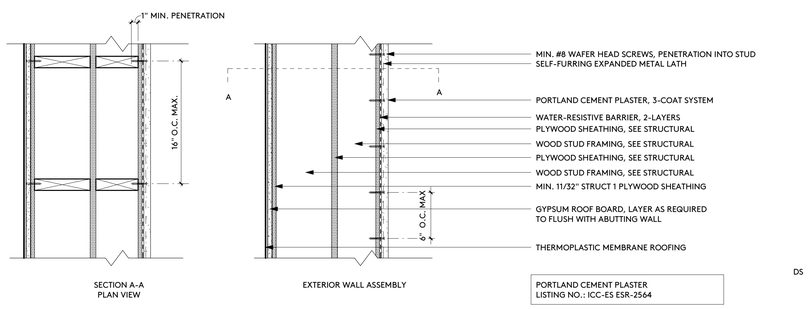

EXTERIOR WALL ASSEMBLY 11

1 1/2" = 1'-0"

EXTERIOR WALL ASSEMBLY 12

1 1/2" = 1'-0"

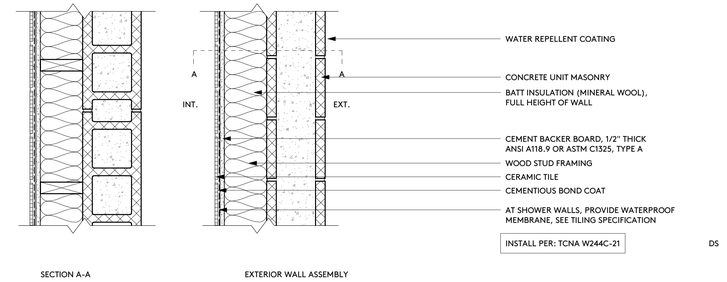

EXTERIOR WALL ASSEMBLY 1

1 1/2" = 1'-0"

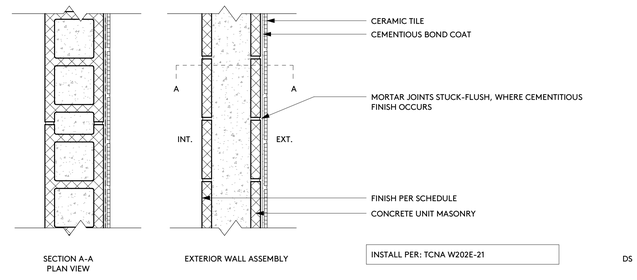

EXTERIOR WALL ASSEMBLY 2

1 1/2" = 1'-0"

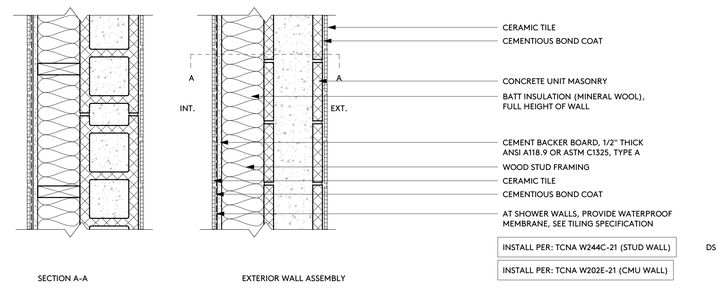

EXTERIOR WALL ASSEMBLY 3

1 1/2" = 1'-0"

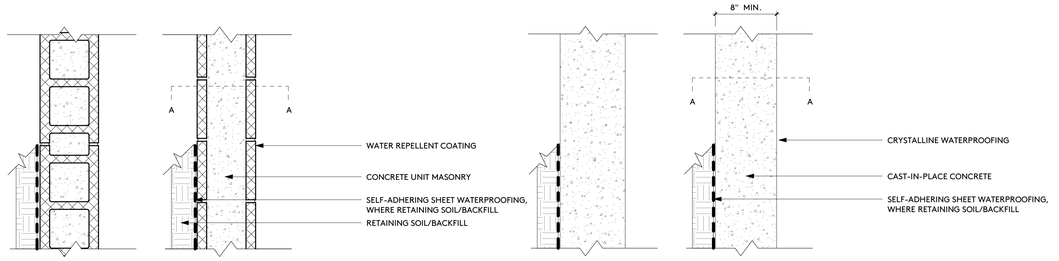

EXTERIOR WALL ASSEMBLY 8

1 1/2" = 1'-0"

EXTERIOR/INTERIOR WALL ASSEMBLY 4

1 1/2" = 1'-0"

IDENTIFICATION STAMP
DIV. OF THE STATE ARCHITECT
APP: 03-122664 INC:
REVIEWED FOR
SS ☑ FLS ☑ ACS ☑
DATE: 05/12/2023

pjhm architects

LICENSED ARCHITECT
RICHARD W. FRUIN
NO. C15585
REN. 02/25
STATE OF CALIFORNIA

SD Phone: 760.730.5527 • LA Office: 837 Traction Avenue, #410, Los Angeles, CA 90013 • LA Phone: 213.278.0172 • Web: pjhm.com
OC Office: 24461 Ridge Route Drive #100, Laguna Hills, CA 92653 • OC Phone: 949.496.6191 • SD Office: 804 Pier View Way #103, Oceanside, CA 92054

HIGHLAND HIGH SCHOOL
50M POOL & AQUATICS CENTER

KERN HIGH SCHOOL DISTRICT

WALL SECTION DETAILS

A-8.12

4/13/2023 9:05:45 AM

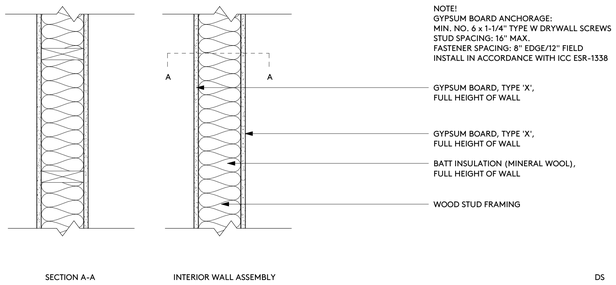

INTERIOR WALL ASSEMBLY 9

1 1/2" = 1'-0"

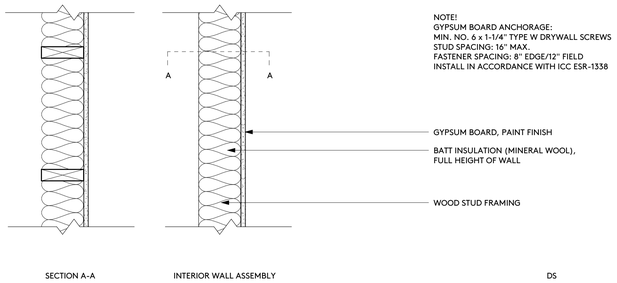

INTERIOR WALL ASSEMBLY 10

1 1/2" = 1'-0"

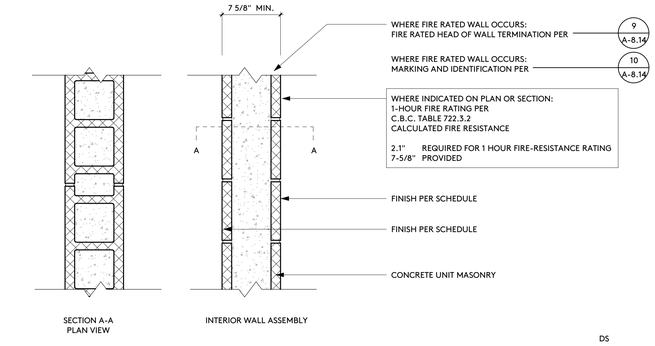

INTERIOR WALL ASSEMBLY 1

1 1/2" = 1'-0"

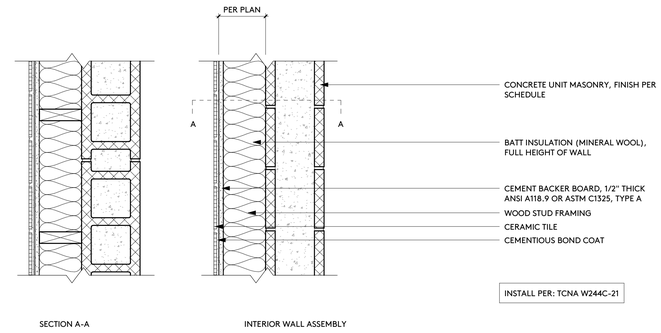

INTERIOR WALL ASSEMBLY 2

1 1/2" = 1'-0"

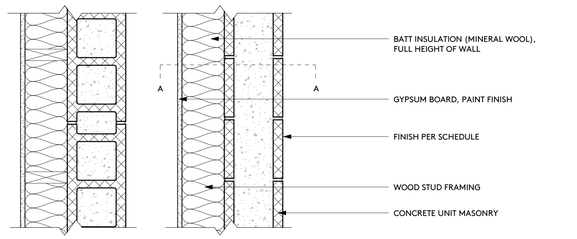

NOTE!
GYPSUM BOARD ANCHORAGE:
MIN. NO. 6 x 1-1/4" TYPE W DRYWALL SCREWS
STUD SPACING: 16" MAX.
FASTENER SPACING: 8" EDGE/12" FIELD
INSTALL IN ACCORDANCE WITH ICC ESR-1338

INTERIOR WALL ASSEMBLY 3

1 1/2" = 1'-0"

IDENTIFICATION STAMP
DIV. OF THE STATE ARCHITECT
APP: 03-122664 INC:
REVIEWED FOR
SS ☑ FLS ☑ ACS ☑
DATE: 05/12/2023

pjhm architects

LICENSED ARCHITECT
THOMAS W. KRUSE
NO. C15585
REN. 02/25
STATE OF CALIFORNIA

HIGHLAND HIGH SCHOOL
50M POOL & AQUATICS CENTER

KERN HIGH SCHOOL DISTRICT

WALL SECTION DETAILS

A-8.13

OC Office: 24461 Ridge Route Drive #100, Laguna Hills, CA 92653 • OC Phone: 949.496.6191 • SD Office: 804 Pier View Way #103, Oceanside, CA 92054 • SD Phone: 760.730.5527 • LA Office: 837 Traction Avenue, #410, Los Angeles, CA 90013 • LA Phone: 213.278.0172 • Web: pjhm.com

4/13/2023 9:05:46 AM

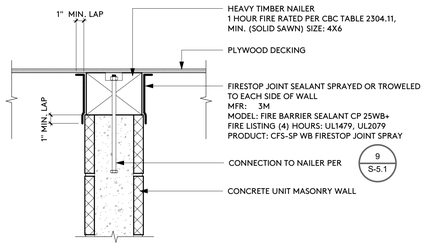

HEAD OF WALL 9

1 1/2" = 1'-0"

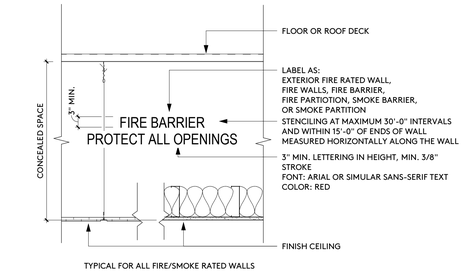

TYPICAL FOR ALL FIRE/SMOKE RATED WALLS

MARKING AND IDENTIFICATION 10

1" = 1'-0"

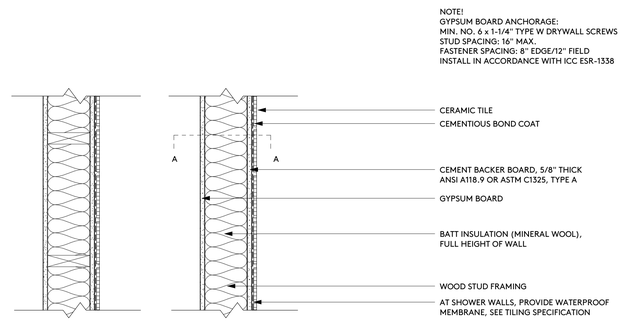

SECTION A-A INTERIOR WALL ASSEMBLY

INSTALL PER: TCNA W244C-21 DS

INTERIOR WALL ASSEMBLY 1

1 1/2" = 1'-0"

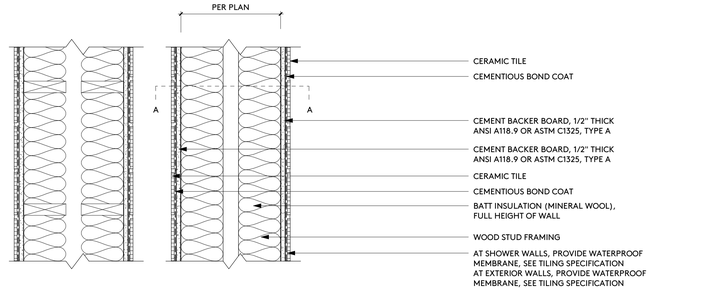

SECTION A-A WALL ASSEMBLY

INSTALL PER: TCNA W244C-21 (INTERIOR WALLS)
TCNA W244E-21 (EXTERIOR WALLS) DS

EXTERIOR / INTERIOR WALL ASSEMBLY 2

1 1/2" = 1'-0"

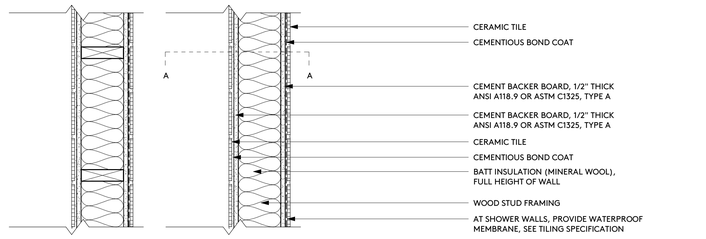

SECTION A-A INTERIOR WALL ASSEMBLY

INSTALL PER: TCNA W244C-21 DS

INTERIOR WALL ASSEMBLY 3

1 1/2" = 1'-0"

IDENTIFICATION STAMP
DIV. OF THE STATE ARCHITECT
APP: 03-122664 INC:
REVIEWED FOR
SS ☑ FLS ☑ ACS ☑
DATE: 05/12/2023

LICENSED ARCHITECT
RICHARD W. FRIEDMAN
NO. C15585
REN. 02/25
STATE OF CALIFORNIA

HIGHLAND HIGH SCHOOL
50M POOL & AQUATICS CENTER

KERN HIGH SCHOOL DISTRICT

WALL SECTION DETAILS

A-8.14

pjhm architects
OC Office: 24461 Ridge Route Drive #100, Laguna Hills, CA 92653 • OC Phone: 949.496.6191 • SD Office: 804 Pier View Way #103, Oceanside, CA 92054 • SD Phone: 760.730.5527 • LA Office: 837 Traction Avenue, #410, Los Angeles, CA 90013 • LA Phone: 213.278.0172 • Web: pjhm.com

4/13/2023 9:05:46 AM

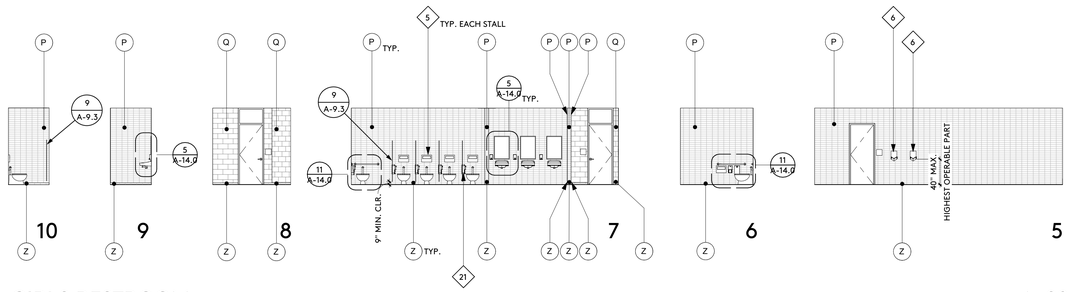

GIRLS RESTROOM A-02

1/8" = 1'-0"

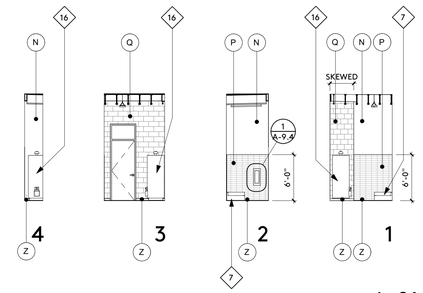

CUSTODIAL A-01

1/8" = 1'-0"

1. METAL LOCKERS
2. METAL LOCKERS EXPANSION TRIM
3. METAL LOCKERS SLOPING TOP PANEL
4. LOCKER ROOM BENCH
5. TOILET SEAT COVER DISPENSERS, SURFACE MOUNTED, SEE TOILET, BATH AND LAUNDRY ACCESSORIES
6. HAND DRYER, SURFACE MOUNTED, SEE TOILET, BATH AND LAUNDRY ACCESSORIES
7. SERVICE SINK, SEE PLUMBING
8. HVAC UNIT, SURFACE MOUNTED, SEE MECHANICAL
9. HVAC DUCT, PAINT FINISH, SEE MECHANICAL
10. ROOF DRAIN PIPES, PAINT FINISH, SEE PLUMBING
11. EMERGENCY SHOWER/EYEWASH STATION, SEE AQUATICS DRAWINGS
12. GUARDRAIL, SEE AQUATICS
13. REFRIGERATOR, OWNER FURNISHED - OWNER INSTALLED
14. STAINLESS STEEL COUNTERTOP
15. GRAB BAR, SEE TOILET, BATH AND LAUNDRY ACCESSORIES
16. WATER HEATER, SEE PLUMBING
17. PRESENTATION DRY ERASE WALL COVERING
18. MARKERBOARD, SURFACE MOUNTED
19. DISPLAY CASE
20. TOILET TISSUE DISPENSER, SURFACE MOUNTED, SEE TOILET, BATH AND LAUNDRY ACCESSORIES
21. SANITARY NAPKIN DISPOSAL, SEE TOILET, BATH AND LAUNDRY ACCESSORIES
22. SHOWER CURTAIN, SHOWER CURTAIN ROD, SHOWER CURTAIN HOOKS, SEE TOILET, BATH AND LAUNDRY ACCESSORIES

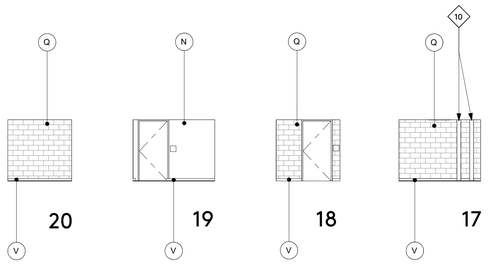

STORAGE A-04

1/8" = 1'-0"

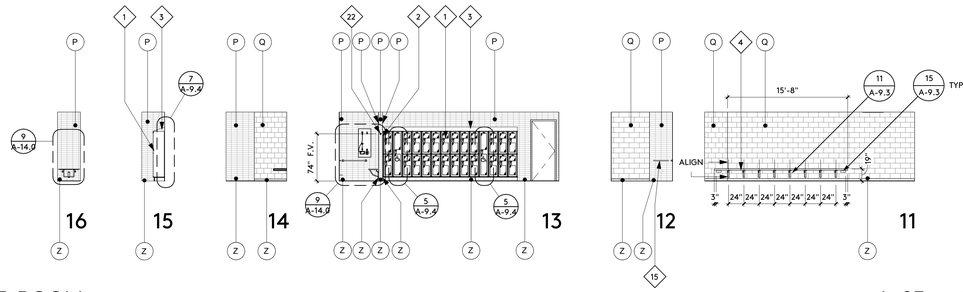

GIRLS LOCKER ROOM A-03

1/8" = 1'-0"

KEYNOTES

- DETAIL REFERENCE NUMBER / SHEET REFERENCE NUMBER
- AWS PLASTIC-LAMINATE-CLAD ARCHITECTURAL CABINETS (ARCHITECTURAL WOODWORK STANDARD) CDS NUMBER
- 'L' (LOCK) / 'M' (MODIFIED)
- DEPTH (INCHES)
- HEIGHT (INCHES)
- WIDTH (INCHES)
- FINISH CALLOUT, SEE FINISH SCHEDULE
- PLAN KEYNOTES
- BUILDING DIMENSION FACE OF STUD
- BUILDING DIMENSION FACES OF FINISH, WHERE OCCURS
- BUILDING CENTERLINE DIMENSION
- TACTILE SIGNAGE, SEE TACTILE SIGNAGE DETAILS, SHEET A-12.0
- FIRE EXTINGUISHER CABINET

OFFICE A-05

1/8" = 1'-0"

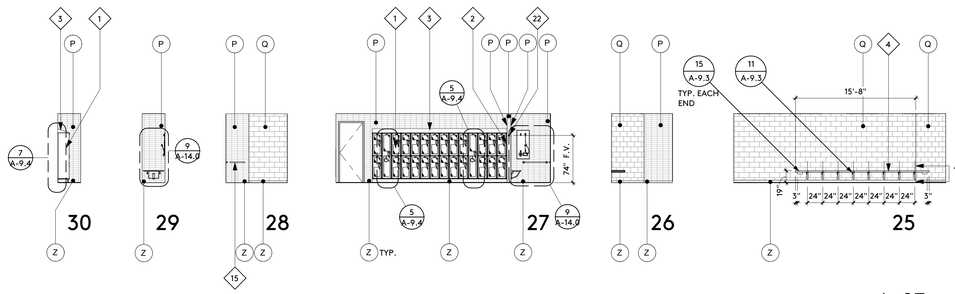

BOYS LOCKER ROOM A-07

1/8" = 1'-0"

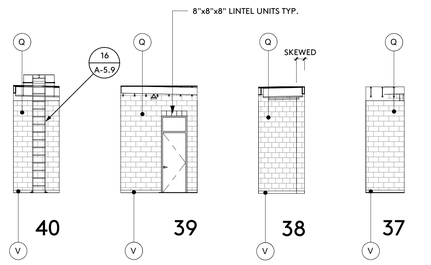

UTILITY A-09

1/8" = 1'-0"

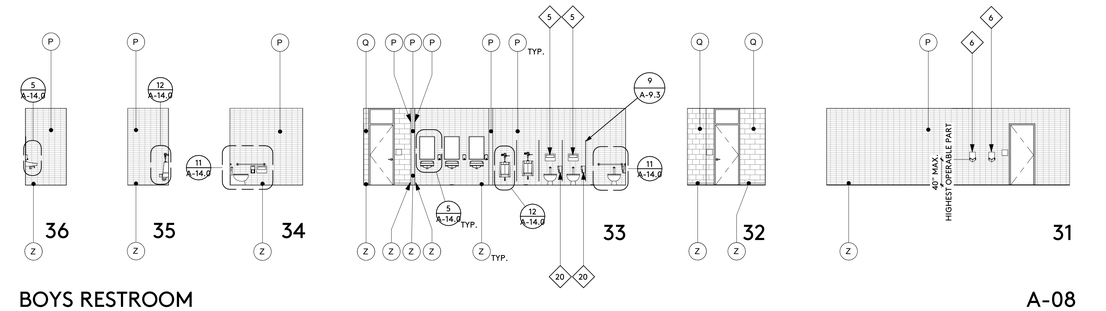

BOYS RESTROOM A-08

1/8" = 1'-0"

SYMBOLS

IDENTIFICATION STAMP
DIV. OF THE STATE ARCHITECT
APP: 03-122664 INC:
REVIEWED FOR
SS ☑ FLS ☑ ACS ☑
DATE: 05/12/2023

pjhm architects

LICENSED ARCHITECT
RICHARD W. PRIMUS
NO. C15585
REN. 02/25
STATE OF CALIFORNIA

LA Office: 837 Traction Avenue, #410, Los Angeles, CA 90013 • LA Phone: 213.278.0172 • Web: pjhm.com
SD Office: 804 Pier View Way #103, Oceanside, CA 92054 • SD Phone: 760.730.5527
OC Office: 24461 Ridge Route Drive #100, Laguna Hills, CA 92653 • OC Phone: 949.496.6191

HIGHLAND HIGH SCHOOL
50M POOL & AQUATICS CENTER

KERN HIGH SCHOOL DISTRICT

INTERIOR ELEVATIONS

A-9.0

4/13/2023 9:05:52 AM

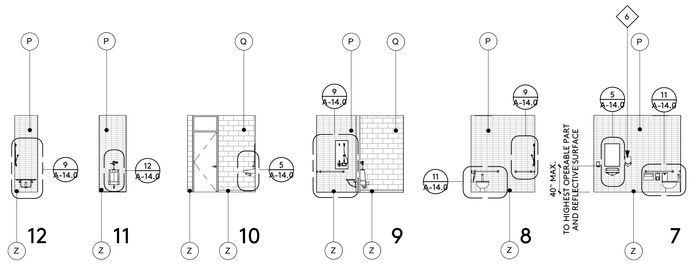

RESTROOM B-02

1/8" = 1'-0"

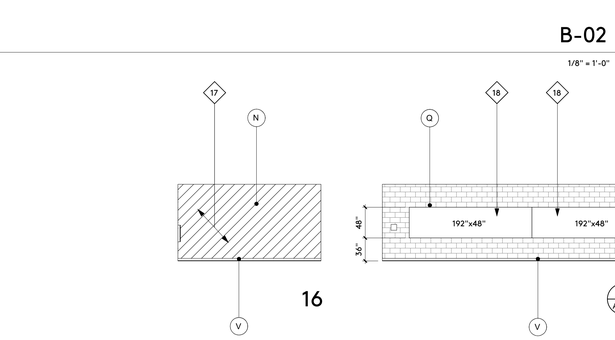

RESTROOM B-01

1/8" = 1'-0"

1. METAL LOCKERS
2. METAL LOCKERS EXPANSION TRIM
3. METAL LOCKERS SLOPING TOP PANEL
4. LOCKER ROOM BENCH
5. TOILET SEAT COVER DISPENSERS, SURFACE MOUNTED, SEE TOILET, BATH AND LAUNDRY ACCESSORIES
6. HAND DRYER, SURFACE MOUNTED, SEE TOILET, BATH AND LAUNDRY ACCESSORIES
7. SERVICE SINK, SEE PLUMBING
8. HVAC UNIT, SURFACE MOUNTED, SEE MECHANICAL
9. HVAC DUCT, PAINT FINISH, SEE MECHANICAL
10. ROOF DRAIN PIPES, PAINT FINISH, SEE PLUMBING
11. EMERGENCY SHOWER/EYEWASH STATION, SEE AQUATICS DRAWINGS
12. GUARDRAIL, SEE AQUATICS
13. REFRIGERATOR, OWNER FURNISHED - OWNER INSTALLED
14. STAINLESS STEEL COUNTERTOP
15. GRAB BAR, SEE TOILET, BATH AND LAUNDRY ACCESSORIES
16. WATER HEATER, SEE PLUMBING
17. PRESENTATION DRY ERASE WALL COVERING
18. MARKERBOARD, SURFACE MOUNTED
19. DISPLAY CASE
20. TOILET TISSUE DISPENSER, SURFACE MOUNTED, SEE TOILET, BATH AND LAUNDRY ACCESSORIES
21. SANITARY NAPKIN DISPOSAL, SEE TOILET, BATH AND LAUNDRY ACCESSORIES
22. SHOWER CURTAIN, SHOWER CURTAIN ROD, SHOWER CURTAIN HOOKS, SEE TOILET, BATH AND LAUNDRY ACCESSORIES

CLASSROOM B-03

1/8" = 1'-0"

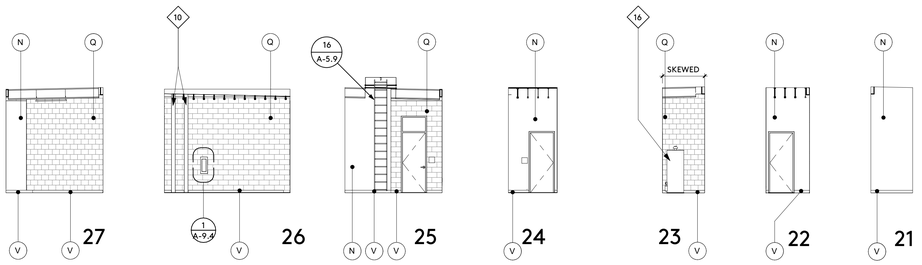

KEYNOTES

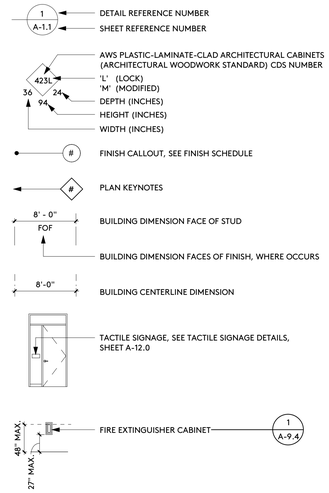

UTILITY B-06

1/8" = 1'-0"

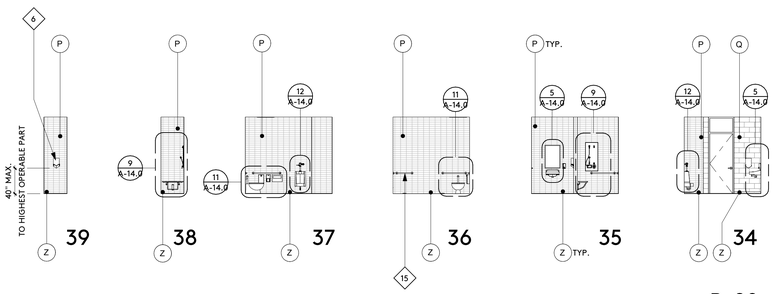

UTILITY B-05

1/8" = 1'-0"

RISER/UTILITY B-04

1/8" = 1'-0"

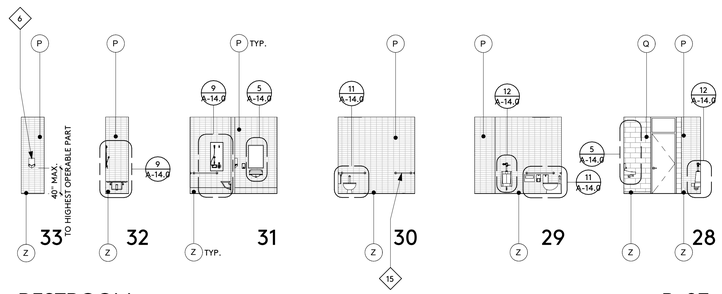

RESTROOM B-08

1/8" = 1'-0"

RESTROOM B-07

1/8" = 1'-0"

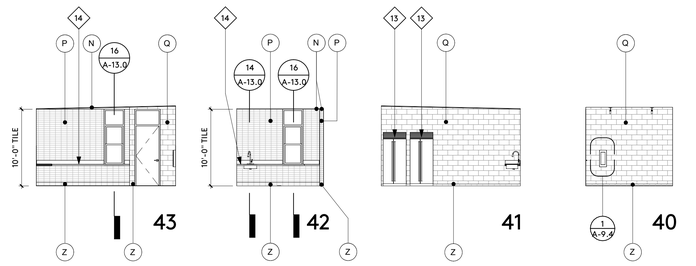

TICKET BOOTH/CONCESSIONS 1

SYMBOLS

IDENTIFICATION STAMP
DIV. OF THE STATE ARCHITECT
APP: 03-122664 INC:
REVIEWED FOR
SS ☑ FLS ☑ ACS ☑
DATE: 05/12/2023

pjhm architects
LICENSED ARCHITECT
RICHARD W. PRIMUS
NO. C15585
REN. 02/25
STATE OF CALIFORNIA
LA Office: 837 Traction Avenue, #410, Los Angeles, CA 90013 • LA Phone: 213.278.0172 • Web: pjhm.com
SD Office: 804 Pier View Way #103, Oceanside, CA 92054 • SD Phone: 760.730.5527
OC Office: 24461 Ridge Route Drive #100, Laguna Hills, CA 92653 • OC Phone: 949.496.6191

HIGHLAND HIGH SCHOOL
50M POOL & AQUATICS CENTER

KERN HIGH SCHOOL DISTRICT

1 ADDENDUM NO. 1

INTERIOR ELEVATIONS

A-9.1

4/13/2023 9:05:57 AM

PUMP ROOM

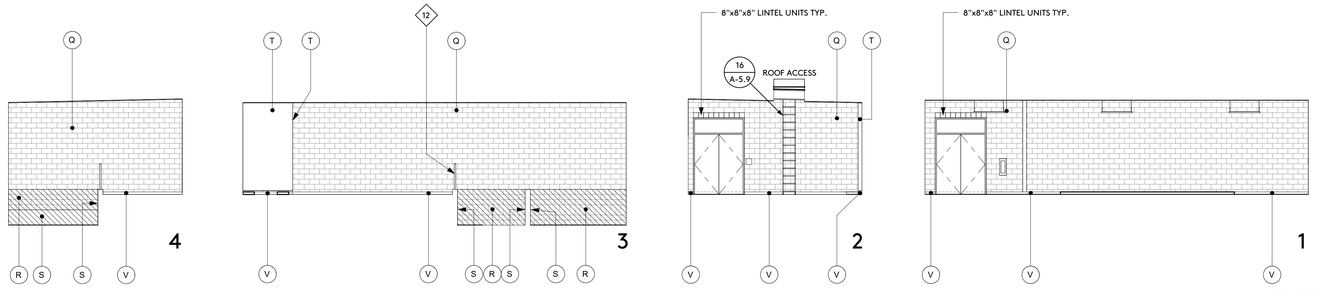

C-01

1/8" = 1'-0"

ACID STORAGE

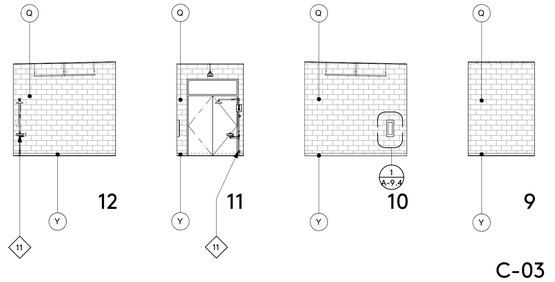

C-03

1/8" = 1'-0"

CHLORINE STORAGE

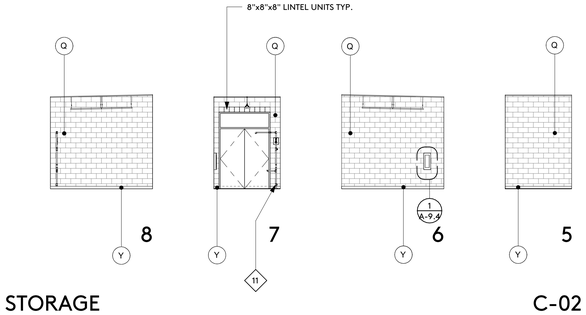

C-02

1/8" = 1'-0"

KEYNOTES

1. METAL LOCKERS
2. METAL LOCKERS EXPANSION TRIM
3. METAL LOCKERS SLOPING TOP PANEL
4. LOCKER ROOM BENCH
5. TOILET SEAT COVER DISPENSERS, SURFACE MOUNTED, SEE TOILET, BATH AND LAUNDRY ACCESSORIES
6. HAND DRYER, SURFACE MOUNTED, SEE TOILET, BATH AND LAUNDRY ACCESSORIES
7. SERVICE SINK, SEE PLUMBING
8. HVAC UNIT, SURFACE MOUNTED, SEE MECHANICAL
9. HVAC DUCT, PAINT FINISH, SEE MECHANICAL
10. ROOF DRAIN PIPES, PAINT FINISH, SEE PLUMBING
11. EMERGENCY SHOWER/EYEWASH STATION, SEE AQUATICS DRAWINGS
12. GUARDRAIL, SEE AQUATICS
13. REFRIGERATOR, OWNER FURNISHED - OWNER INSTALLED
14. STAINLESS STEEL COUNTERTOP
15. GRAB BAR, SEE TOILET, BATH AND LAUNDRY ACCESSORIES
16. WATER HEATER, SEE PLUMBING
17. PRESENTATION DRY ERASE WALL COVERING
18. MARKERBOARD, SURFACE MOUNTED
19. DISPLAY CASE
20. TOILET TISSUE DISPENSER, SURFACE MOUNTED, SEE TOILET, BATH AND LAUNDRY ACCESSORIES
21. SANITARY NAPKIN DISPOSAL, SEE TOILET, BATH AND LAUNDRY ACCESSORIES
22. SHOWER CURTAIN, SHOWER CURTAIN ROD, SHOWER CURTAIN HOOKS, SEE TOILET, BATH AND LAUNDRY ACCESSORIES

SYMBOLS

IDENTIFICATION STAMP
DIV. OF THE STATE ARCHITECT
APP: 03-122664 INC:
REVIEWED FOR
SS ☑ FLS ☑ ACS ☑
DATE: 05/12/2023

pjhm architects

LICENSED ARCHITECT
RICHARD W. PRIMUS
NO. C15585
REN. 02/25
STATE OF CALIFORNIA

HIGHLAND HIGH SCHOOL
50M POOL & AQUATICS CENTER

KERN HIGH SCHOOL DISTRICT

INTERIOR ELEVATIONS

A-9.2

OC Office: 24461 Ridge Route Drive #100, Laguna Hills, CA 92653 • OC Phone: 949.496.6191 • SD Office: 804 Pier View Way #103, Oceanside, CA 92054 • SD Phone: 760.730.5527 • LA Office: 837 Traction Avenue, #410, Los Angeles, CA 90013 • LA Phone: 213.278.0172 • Web: pjhm.com

4/13/2023 11:27:09 AM

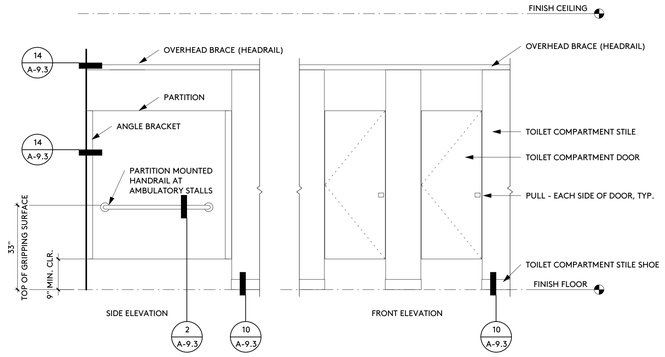

TOILET COMPARTMENTS 9

1/2" = 1'-0"

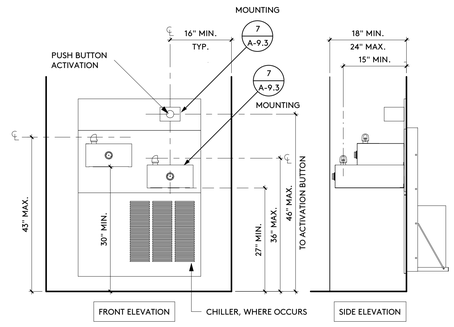

NOTE:
- DIMENSIONS ARE TO FACE OF FINISH U.O.N.
- FOR ADDITIONAL INFORMATION SEE SPECIFICATIONS

ANCHORAGE - GRAB BAR 1

3" = 1'-0"

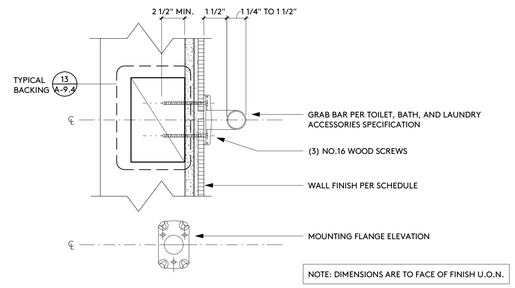

NOTE: DIMENSIONS ARE TO FACE OF FINISH U.O.N.

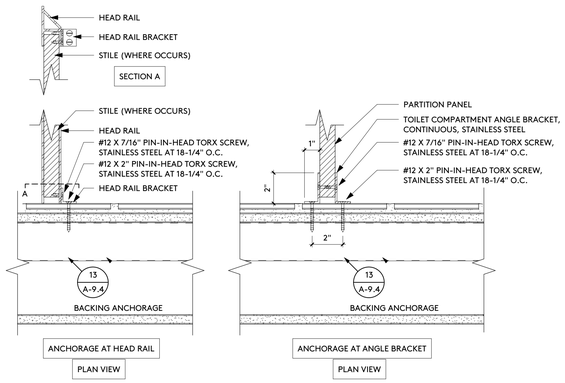

ANCHORAGE - TOILET COMPARTMENTS 14

3" = 1'-0"

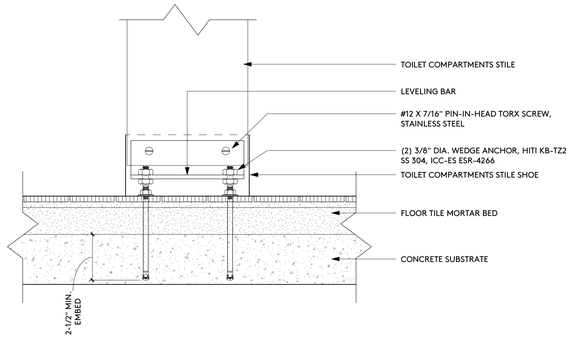

ANCHORAGE - TOILET COMPARTMENTS 10

3" = 1'-0"

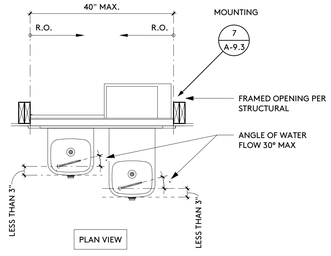

DRINKING FOUNTAIN 6

3/4" = 1'-0"

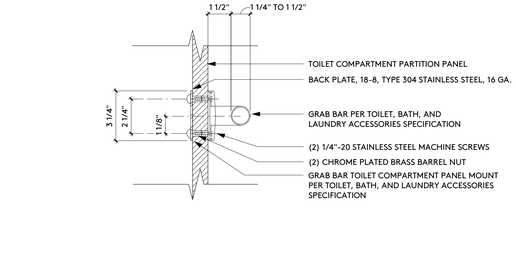

NOTE: DIMENSIONS ARE TO FACE OF FINISH U.O.N.

ANCHORAGE - GRAB BAR 2

3" = 1'-0"

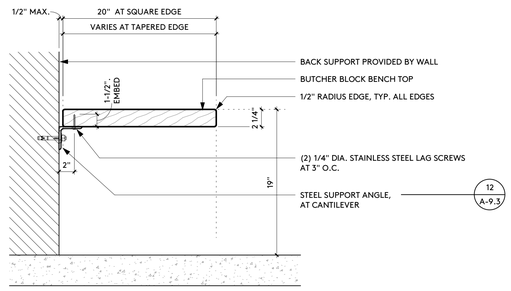

ANCHORAGE - LOCKER ROOM BENCH 15

1 1/2" = 1'-0"

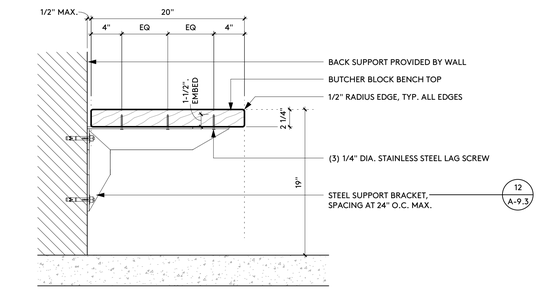

ANCHORAGE - LOCKER ROOM BENCH 11

1 1/2" = 1'-0"

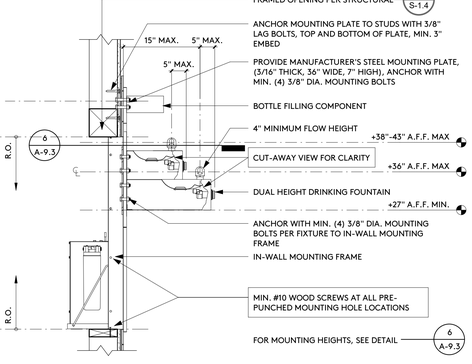

ANCHORAGE - DRINKING FOUNTAIN 7

1" = 1'-0"

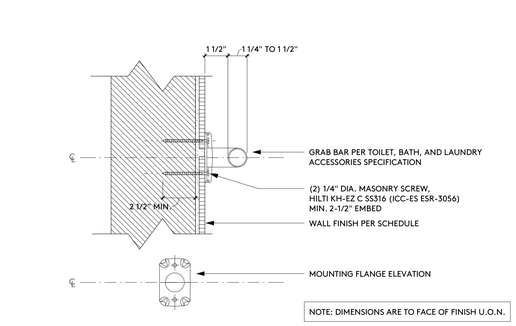

NOTE: DIMENSIONS ARE TO FACE OF FINISH U.O.N.

ANCHORAGE - GRAB BAR 3

3" = 1'-0"

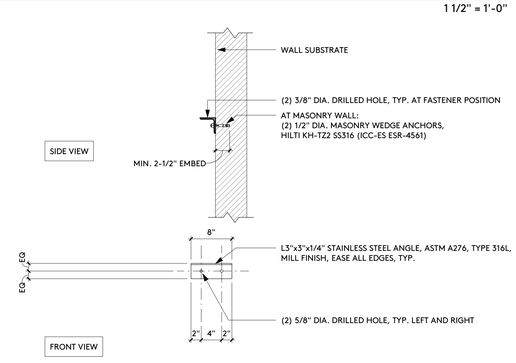

BENCH SUPPORT ANGLE 16

1" = 1'-0"

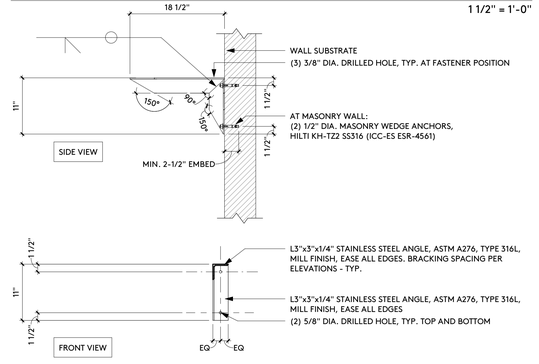

BENCH SUPPORT BRACKET 12

1" = 1'-0"

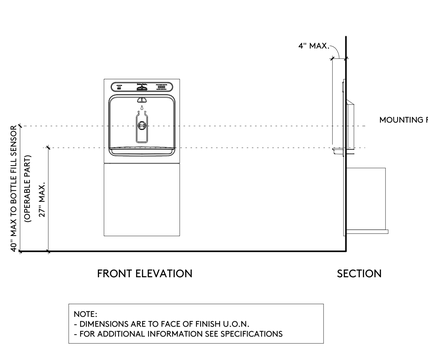

BOTTLE FILLING STATION 8

3/4" = 1'-0"

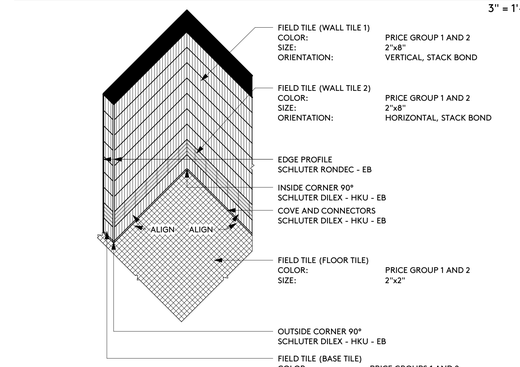

FIELD TILE LAYOUT 4

3/8" = 1'-0"

IDENTIFICATION STAMP
DIV. OF THE STATE ARCHITECT
APP: 03-122664 INC:
REVIEWED FOR
SS ☑ FLS ☑ ACS ☑
DATE: 05/12/2023

pjhm architects
LICENSED ARCHITECT
RICHARD W. PRIMUS
NO. C15585
REN. 02/25
STATE OF CALIFORNIA
LA Office: 837 Traction Avenue, #410, Los Angeles, CA 90013 • LA Phone: 213.278.0172 • Web: pjhm.com
SD Phone: 760.730.5527 • OC Office: 24461 Ridge Route Drive #100, Laguna Hills, CA 92653 • OC Phone: 949.496.6191 • SD Office: 804 Pier View Way #103, Oceanside, CA 92054

HIGHLAND HIGH SCHOOL
50M POOL & AQUATICS CENTER

KERN HIGH SCHOOL DISTRICT

INTERIOR ELEVATION DETAILS

A-9.3

4/13/2023 9:06:00 AM

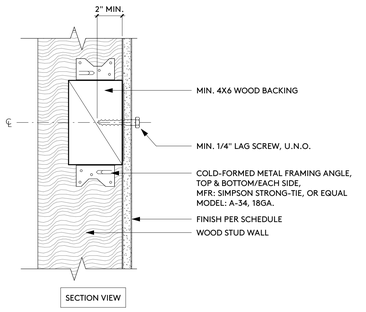

ANCHORAGE - TYPICAL BACKING 13

3" = 1'-0"

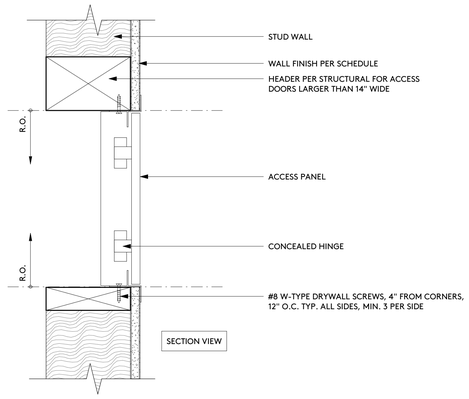

ANCHORAGE - WALL ACCESS PANEL 9

3" = 1'-0"

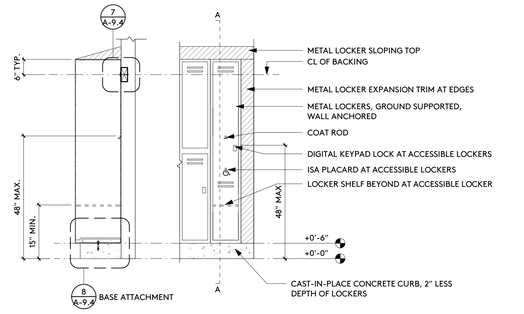

METALS LOCKERS - WALL MOUNTED 5

1/2" = 1'-0"

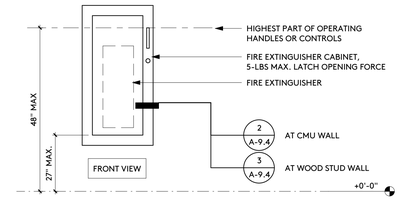

NOTE: FIRE EXTINGUISHER CABINET HANDLE SHALL NOT REQUIRE TIGHT GRASPING, PINCHING OR TWISTING OF THE WRIST

FIRE EXTINGUISHER CABINET 1

1" = 1'-0"

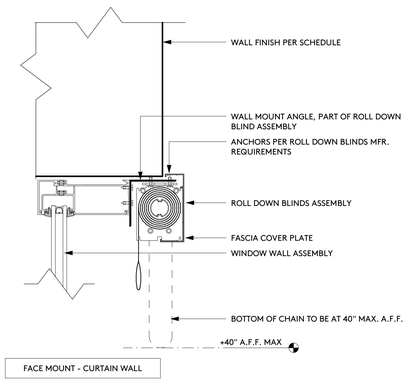

ANCHORAGE - ROLL DOWN BLINDS 14

3" = 1'-0"

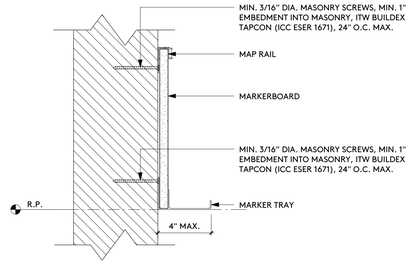

NOTE: DIMENSIONS ARE TO FACE OF FINISH U.O.N.

ANCHORAGE - GRAB BAR 6

3" = 1'-0"

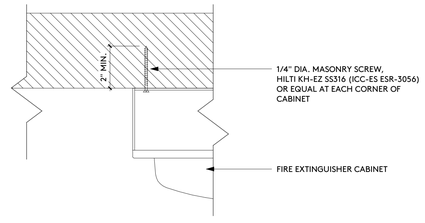

ANCHORAGE - FIRE EXTINGUISHER CABINET 2

3" = 1'-0"

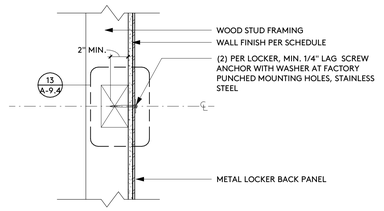

ANCHORAGE - METAL LOCKERS 7

1 1/2" = 1'-0"

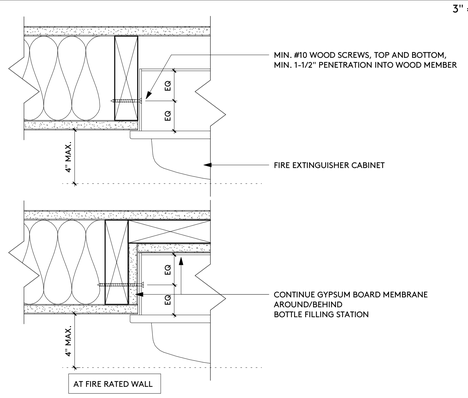

ANCHORAGE - FIRE EXTINGUISHER CABINET 3

3" = 1'-0"

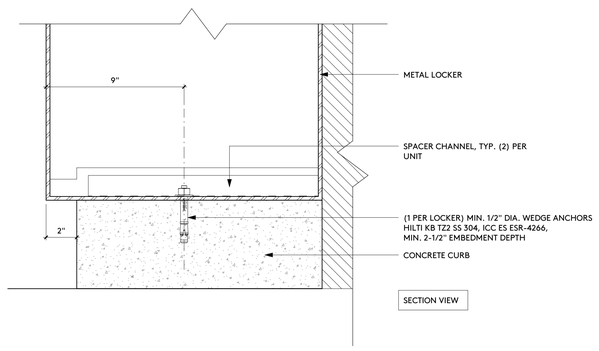

ANCHORAGE - METAL LOCKERS 8

3" = 1'-0"

pjhm architects
OC Office: 24461 Ridge Route Drive #100, Laguna Hills, CA 92653 • OC Phone: 949.496.6191 • SD Office: 804 Pier View Way #103, Oceanside, CA 92054 • SD Phone: 760.730.5527 • LA Office: 837 Traction Avenue, #410, Los Angeles, CA 90013 • LA Phone: 213.278.0172 • Web: pjhm.com

IDENTIFICATION STAMP
DIV. OF THE STATE ARCHITECT
APP: 03-122664 INC:
REVIEWED FOR
SS ☑ FLS ☑ ACS ☑
DATE: 05/12/2023

LICENSED ARCHITECT
RICHARD W. FRIMAN
NO. C15585
REN. 02/25
STATE OF CALIFORNIA

HIGHLAND HIGH SCHOOL
50M POOL & AQUATICS CENTER

KERN HIGH SCHOOL DISTRICT

INTERIOR ELEVATION DETAILS

A-9.4

4/13/2023 9:06:01 AM

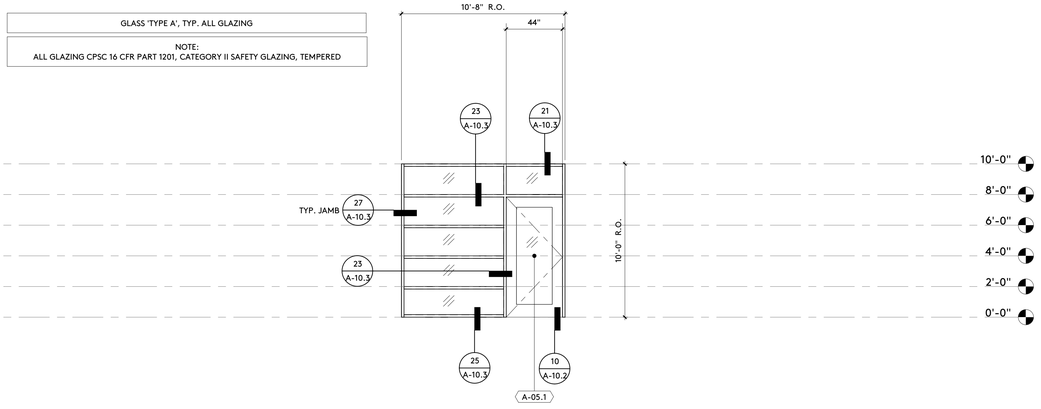

WINDOW WALL ELEVATION - WW-A5.1

G

1/4" = 1'-0"

OPENING NUMBER	ROOM NUMBER	OPENING FUNCTION	FRAME TYPE	FRAME MATERIAL	DOOR TYPE	DOOR MATERIAL	GLAZING, GLASS TYPE	FIRE RATINGS (IN MIN.)			EXIT DEVICE REQUIRED	DOOR HARDWARE GROUP	LOCKABLE INSIDE	OPENING DETAILS					OPENING DETAILS: SEE SHEETS: A-10.2, A-10.3, A-10.4 DOOR HARDWARE GROUP: SEE SPECIFICATION SECTION 08 71 00 GLAZING GLASS TYPE: SEE SPECIFICATION SECTION 08 80 00 NOTE! DOOR SHALL BE OPENABLE FROM INSIDE WITH A SINGLE MOTION WITHOUT THE USE OF ANY TOOLS, EFFORT, OR SPECIAL KNOWLEDGE. COMMENTS
								FRAME FIRE ASSEMBLY	DOOR FIRE ASSEMBLY	SIDELITE/TRANSOM GLASS FIRE ASSEMBLY				HEAD	JAMB	SILL	THRESHOLD	MULLION/TRANSOM	
A-01.1	A-01	EXTERIOR DOOR	A	HOLLOW METAL	1	HOLLOW METAL	A	-	-	-	NO	1	No	21	22	-	10	23	
A-02.1	A-02	EXTERIOR DOOR	A	HOLLOW METAL	1	HOLLOW METAL	B	-	-	-	NO	2	No	26	22	-	15	23	
A-02.2	A-02	EXTERIOR DOOR	A	HOLLOW METAL	1	HOLLOW METAL	B	-	-	-	NO	2	No	26	22	-	15	23	
A-03.1	A-03	INTERIOR DOOR	B	HOLLOW METAL	1	HOLLOW METAL	-	-	-	-	NO	3	Yes	2	2	-	5	-	
A-04.1	A-04	INTERIOR DOOR	C	HOLLOW METAL	1	HOLLOW METAL	-	-	-	-	NO	4	No	1	1	-	5	-	
A-04.2	A-04	EXTERIOR DOOR	C	HOLLOW METAL	1	HOLLOW METAL	-	-	-	-	NO	5	No	6	7	-	10	-	
A-05.1	A-05	WINDOW WALL	WW-A5.1	HOLLOW METAL	3	HOLLOW METAL	-	-	-	-	NO	5	No	-	-	-	-	-	SEE WINDOW WALL ELEVATIONS
A-07.1	A-07	INTERIOR DOOR	B	HOLLOW METAL	1	HOLLOW METAL	-	-	-	-	NO	3	Yes	2	2	-	5	-	
A-08.1	A-08	EXTERIOR DOOR	A	HOLLOW METAL	1	HOLLOW METAL	B	-	-	-	NO	2	No	26	22	-	15	23	
A-08.2	A-08	EXTERIOR DOOR	A	HOLLOW METAL	1	HOLLOW METAL	B	-	-	-	NO	2	No	26	22	-	15	23	
A-09.1	A-09	EXTERIOR DOOR	A	HOLLOW METAL	1	HOLLOW METAL	A	-	-	-	NO	1	No	21	22	-	10	23	

BUILDING A

B-01.1	B-01	EXTERIOR DOOR	A	HOLLOW METAL	1	HOLLOW METAL	B				NO	7		21	22	-	15	23	
B-02.1	B-02	EXTERIOR DOOR	A	HOLLOW METAL	1	HOLLOW METAL	B				NO	7		21	22	-	15	23	
B-03.1	B-03	WINDOW WALL	WW-B3.1	HOLLOW METAL	3	HOLLOW METAL	-	-	-	-	NO	8	Yes	-	-	-	-	-	SEE WINDOW WALL ELEVATIONS
B-03.2	B-03	WINDOW WALL	WW-B3.2	HOLLOW METAL	3	HOLLOW METAL	-	-	-	-	NO	8	Yes	-	-	-	-	-	SEE WINDOW WALL ELEVATIONS
B-03.3	B-03	EXTERIOR WINDOW	E	HOLLOW METAL			A					-		26	22	24	-	23	
B-03.4	B-03	EXTERIOR WINDOW	E	HOLLOW METAL			A					-		26	22	24	-	23	
B-03.5	B-03	EXTERIOR WINDOW	E	HOLLOW METAL			A					-		26	22	24	-	23	
B-04.1	B-04	INTERIOR DOOR	B	HOLLOW METAL	1	HOLLOW METAL	-				NO	9		1	1	-	5	-	
B-05.1	B-05	INTERIOR DOOR	B	HOLLOW METAL	1	HOLLOW METAL	-				NO	9		1	1	-	5	-	
B-06.1	B-06	EXTERIOR DOOR	A	HOLLOW METAL	1	HOLLOW METAL	A				NO	10		26	22	-	10	23	
B-07.1	B-07	EXTERIOR DOOR	A	HOLLOW METAL	1	HOLLOW METAL	B				NO	11		26	22	-	20	23	
B-08.1	B-08	EXTERIOR DOOR	A	HOLLOW METAL	1	HOLLOW METAL	B				NO	11		26	22	-	20	23	
B-09.1	B-09	EXTERIOR DOOR	A	HOLLOW METAL	3	HOLLOW METAL	A				NO	12		6	7	-	10	23	
B-09.2	B-09	EXTERIOR WINDOW	F	HOLLOW METAL			-					-		-	-	-	-	-	SEE FRAME TYPE 'F'
B-09.3	B-09	EXTERIOR WINDOW	F	HOLLOW METAL			-					-		-	-	-	-	-	SEE FRAME TYPE 'F'

BUILDING B

C-01.1	C-01	EXTERIOR DOOR	D	FIBERGLASS	2	FIBERGLASS	A	-	-	-	NO	14		41	42	-	45	43	
C-01.2	C-01	EXTERIOR DOOR	D	FIBERGLASS	2	FIBERGLASS	A	-	-	-	NO	13		41	42	-	44	43	
C-02.1	C-02	EXTERIOR DOOR	D	FIBERGLASS	2	FIBERGLASS	A	-	-	-	NO	13		41	42	-	44	43	
C-03.1	C-03	EXTERIOR DOOR	D	FIBERGLASS	2	FIBERGLASS	A	-	-	-	NO	13		41	42/47	-	44	43	

BUILDING C

OPENING SCHEDULE

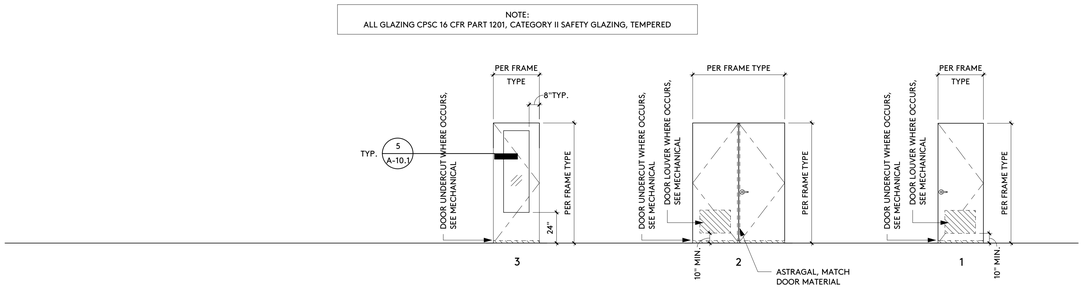

DOOR TYPES

1/4" = 1'-0"

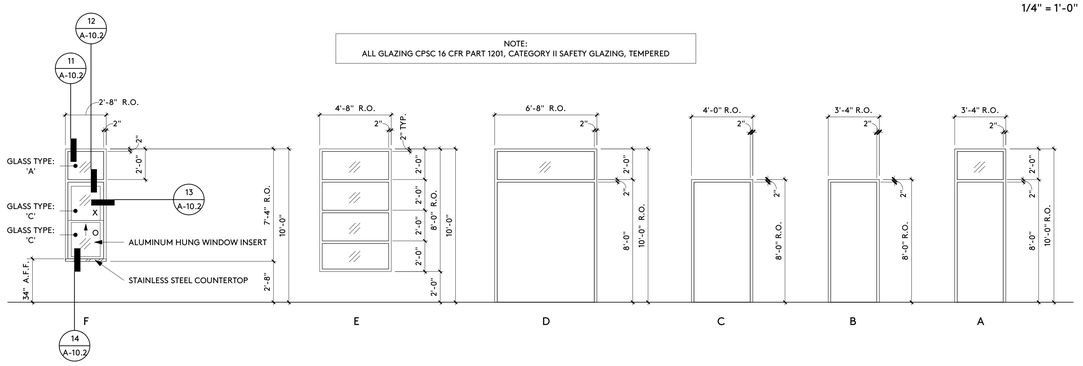

FRAME TYPES

1/4" = 1'-0"

WINDOW WALL ELEVATION - WW-B3.1, WW-B3.2

J

1/4" = 1'-0"

4/13/2023 9:06:03 AM

IDENTIFICATION STAMP
DIV. OF THE STATE ARCHITECT
APP: 03-122664 INC:
REVIEWED FOR
SS ☑ FLS ☑ ACS ☑
DATE: 05/12/2023

pjhm architects

LICENSED ARCHITECT
RICHARD W. PRIEST
NO. C15585
REN. 02/25
STATE OF CALIFORNIA

HIGHLAND HIGH SCHOOL
50M POOL & AQUATICS CENTER

KERN HIGH SCHOOL DISTRICT

OPENING SCHEDULE/TYPES

A-10.0

OC Office: 24461 Ridge Route Drive #100, Laguna Hills, CA 92653 • LA Office: 837 Traction Avenue, #410, Los Angeles, CA 90013 • SD Phone: 760.730.5527 • OC Phone: 949.496.6191 • LA Phone: 213.278.0172 • SD Office: 804 Pier View Way #103, Oceanside, CA 92054 • Web: pjhm.com

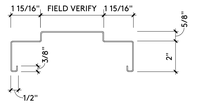

HOLLOW METAL FRAME PROFILE 12A

3" = 1'-0"

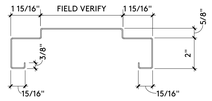

HOLLOW METAL FRAME PROFILE 12B

3" = 1'-0"

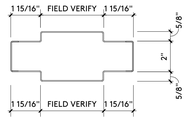

HOLLOW METAL FRAME PROFILE 13A

3" = 1'-0"

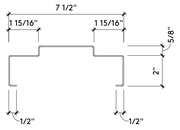

HOLLOW METAL FRAME PROFILE 13B

3" = 1'-0"

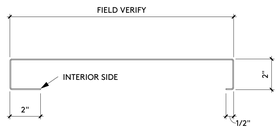

HOLLOW METAL FRAME PROFILE 14A

3" = 1'-0"

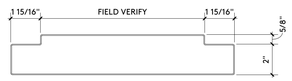

HOLLOW METAL FRAME PROFILE 14B

3" = 1'-0"

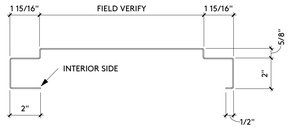

HOLLOW METAL FRAME PROFILE 15A

3" = 1'-0"

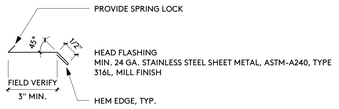

PROFILE 9A

6" = 1'-0"

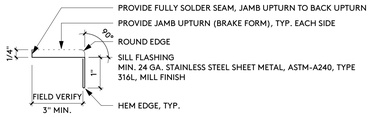

PROFILE 9B

6" = 1'-0"

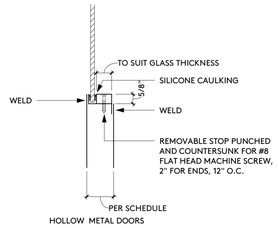

NOTE: DOOR LITE FRAMES WILL NOT BE ACCEPTED

DOOR LITE ANCHORAGE 5

3" = 1'-0"

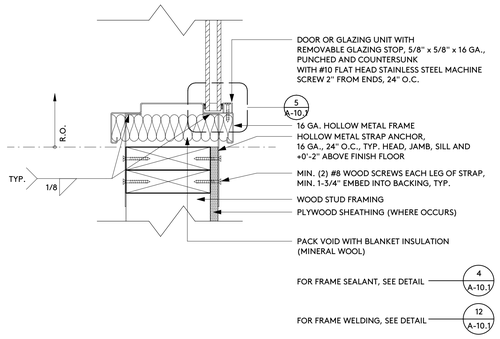

HM FRAME ANCHORAGE 1

3" = 1'-0"

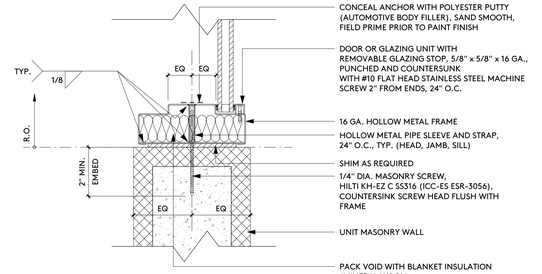

HOLLOW METAL FRAME ANCHORAGE 2

3" = 1'-0"

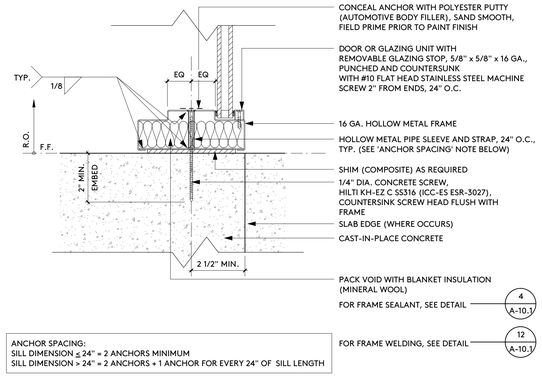

ANCHOR SPACING:
SILL DIMENSION ≤ 24" = 2 ANCHORS MINIMUM
SILL DIMENSION > 24" = 2 ANCHORS + 1 ANCHOR FOR EVERY 24" OF SILL LENGTH

HOLLOW METAL FRAME ANCHORAGE 3

3" = 1'-0"

NOTE:
1. ALL HOLLOW METAL FRAMES SHALL BE FULL PROFILE WELDED IN ACCORDANCE WITH ANSI A250.8 - CURRENT EDITION, SECTION 2.4.1.3
2. KNOCK-DOWN FRAMES WILL NOT BE PERMITTED
3. ALL FRAME ANCHORAGE MUST BE WELDED TO FRAME MEMBERS, 'TWIST-IN' STYLE OR LOOSE ANCHORS WILL NOT BE PERMITTED

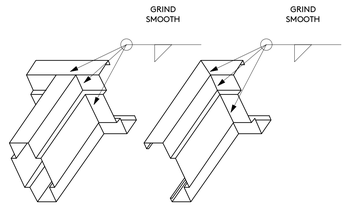

HOLLOW METAL FRAME WELDING 12

3" = 1'-0"

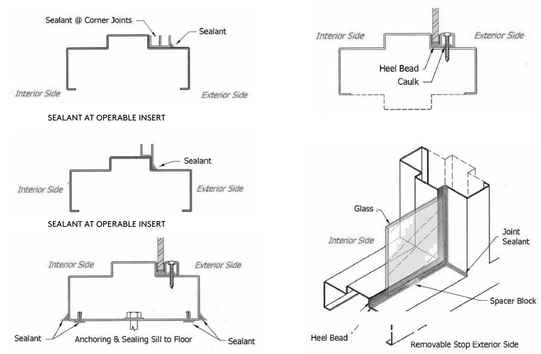

Figure 3C

HM FRAME SEALANT 4

SCALE: NO SCALE

IDENTIFICATION STAMP
DIV. OF THE STATE ARCHITECT
APP: 03-122664 INC:
REVIEWED FOR
SS ☑ FLS ☑ ACS ☑
DATE: 05/12/2023

pjhm architects
LICENSED ARCHITECT
RICHARD W. PRIEBE
NO. C15585
REN. 02/25
STATE OF CALIFORNIA
OC Office: 24461 Ridge Route Drive #100, Laguna Hills, CA 92653 • OC Phone: 949.496.6191 • SD Office: 804 Pier View Way #103, Oceanside, CA 92054 • SD Phone: 760.730.5527 • LA Office: 837 Traction Avenue, #410, Los Angeles, CA 90013 • LA Phone: 213.278.0172 • Web: pjhm.com

HIGHLAND HIGH SCHOOL
50M POOL & AQUATICS CENTER

KERN HIGH SCHOOL DISTRICT

OPENING DETAILS

A-10.1

4/13/2023 9:06:04 AM

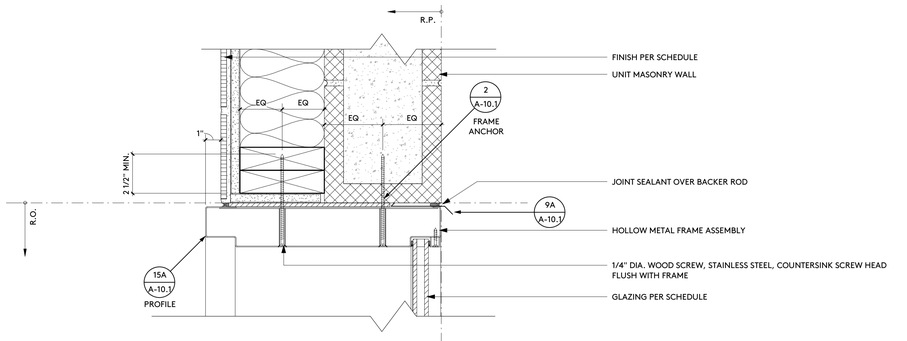

HEAD 11

3" = 1'-0"

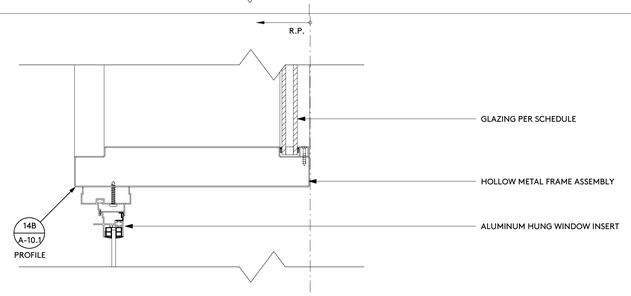

TRANSOM 12

3" = 1'-0"

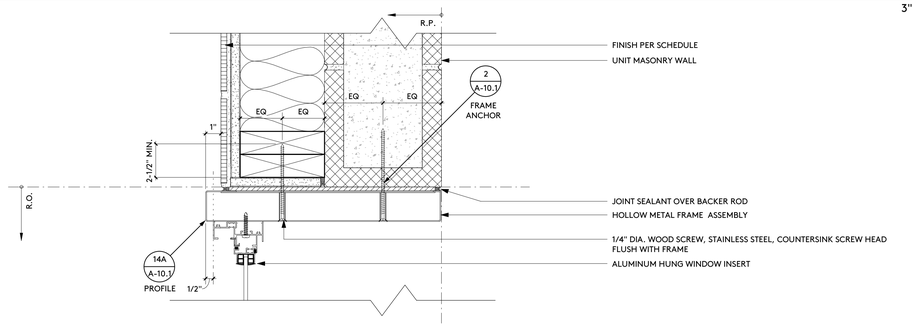

JAMB 13

3" = 1'-0"

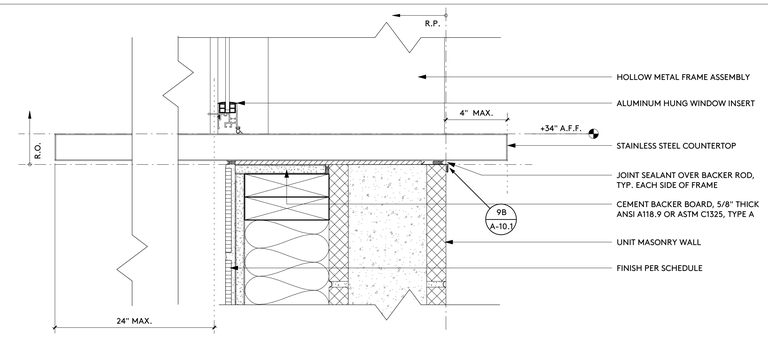

SILL 14

3" = 1'-0"

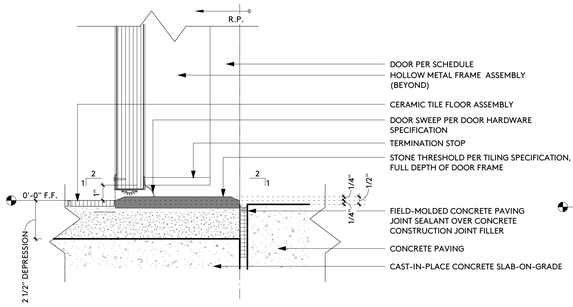

THRESHOLD 20

3" = 1'-0"

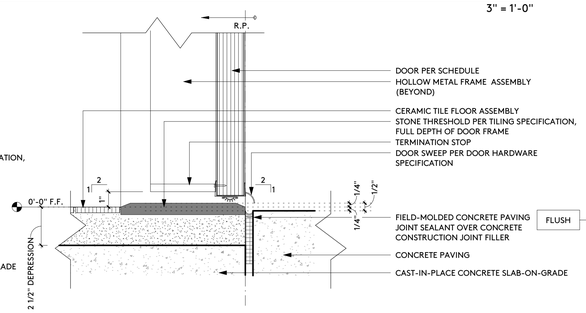

THRESHOLD 15

3" = 1'-0"

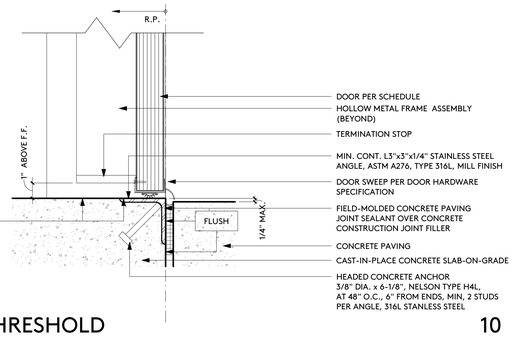

THRESHOLD 10

3" = 1'-0"

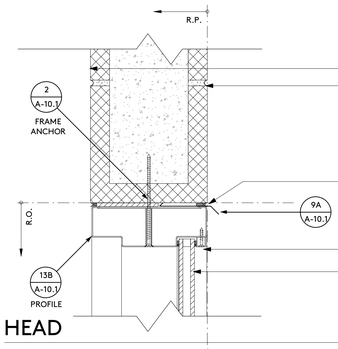

HEAD 6

3" = 1'-0"

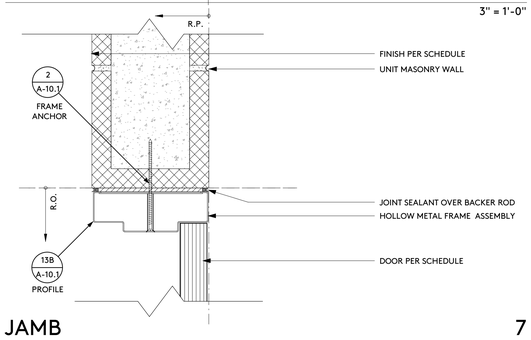

JAMB 7

3" = 1'-0"

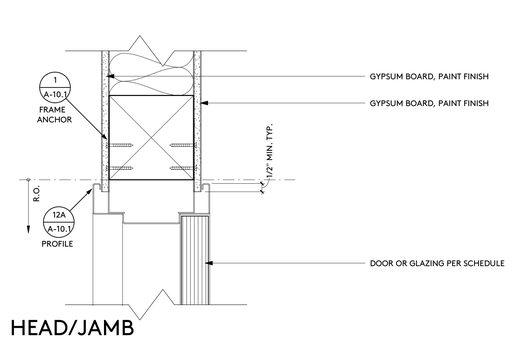

HEAD/JAMB 1

3" = 1'-0"

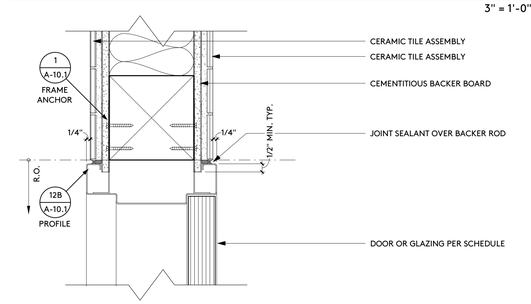

HEAD/JAMB 2

3" = 1'-0"

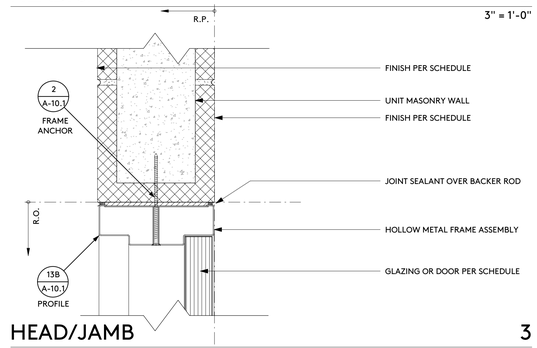

HEAD/JAMB 3

3" = 1'-0"

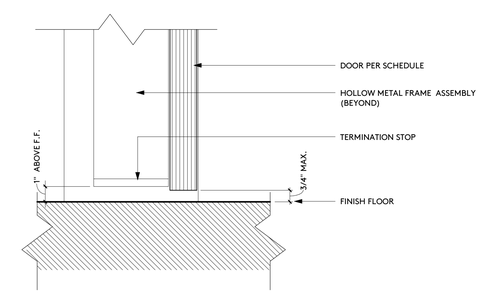

THRESHOLD 5

3" = 1'-0"

IDENTIFICATION STAMP
DIV. OF THE STATE ARCHITECT
APP: 03-122664 INC:
REVIEWED FOR
SS ☑ FLS ☑ ACS ☑
DATE: 05/12/2023

pjhm architects
LICENSED ARCHITECT
RICHARD W. PRIEST
NO. C15585
REN. 02/25
STATE OF CALIFORNIA
Web: pjhm.com
LA Phone: 213.278.0172
SD Office: 804 Pier View Way #103, Oceanside, CA 92054
SD Phone: 760.730.5527
LA Office: 837 Traction Avenue, #410, Los Angeles, CA 90013
OC Phone: 949.496.6191
OC Office: 24461 Ridge Route Drive #100, Laguna Hills, CA 92653

HIGHLAND HIGH SCHOOL
50M POOL & AQUATICS CENTER

KERN HIGH SCHOOL DISTRICT

OPENING DETAILS

A-10.2

4/13/2023 9:06:05 AM

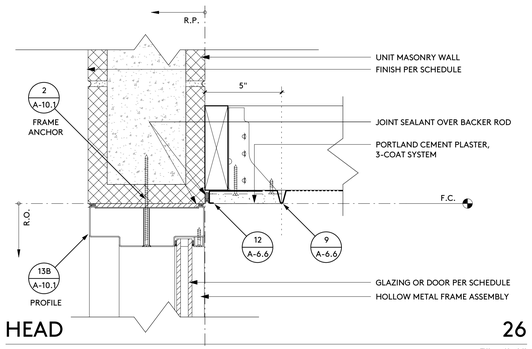

HEAD 26

3" = 1'-0"

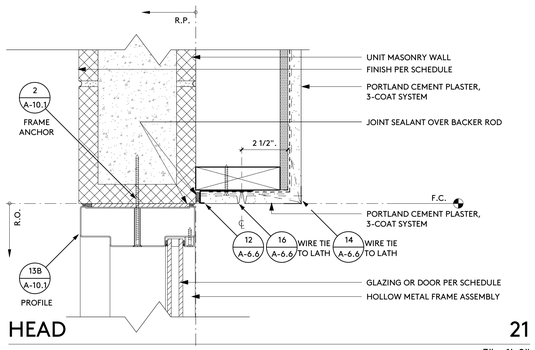

HEAD 21

3" = 1'-0"

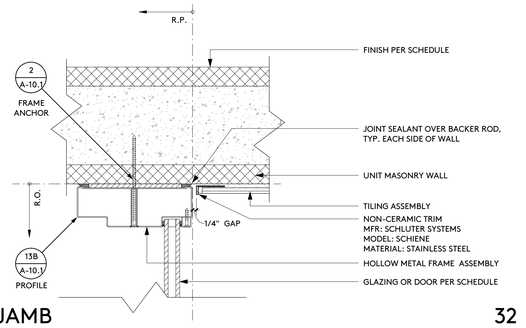

JAMB 32

3" = 1'-0"

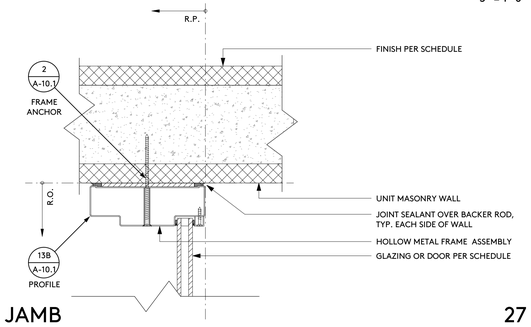

JAMB 27

3" = 1'-0"

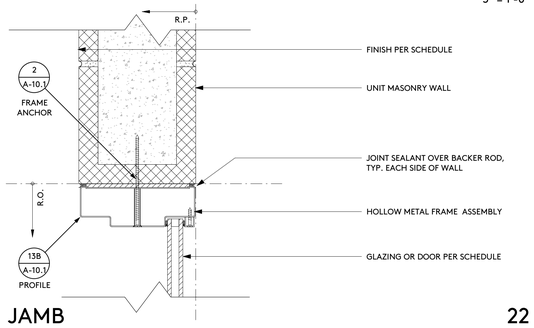

JAMB 22

3" = 1'-0"

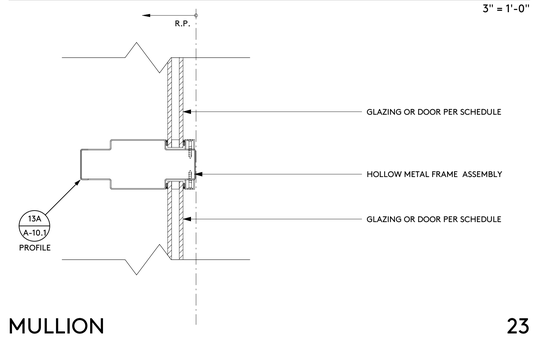

MULLION 23

3" = 1'-0"

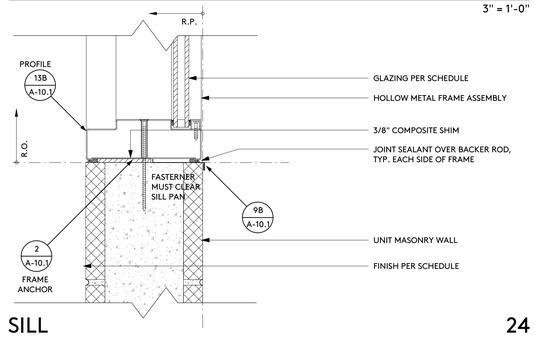

SILL 24

3" = 1'-0"

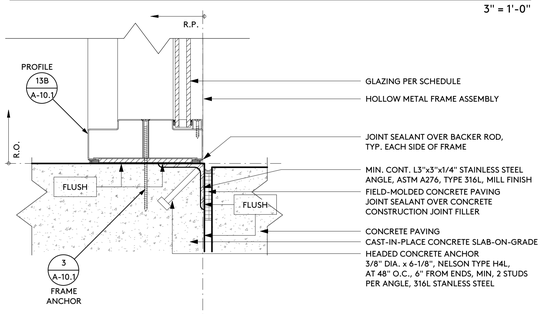

SILL 25

3" = 1'-0"

IDENTIFICATION STAMP
DIV. OF THE STATE ARCHITECT
APP: 03-122664 INC:
REVIEWED FOR
SS ☑ FLS ☑ ACS ☑
DATE: 05/12/2023

pjhm architects

LICENSED ARCHITECT
RICHARD W. FRIEND
NO. C15585
REN. 02/25
STATE OF CALIFORNIA

OC Office: 24461 Ridge Route Drive #100, Laguna Hills, CA 92653 • SD Phone: 760.730.5527 • LA Office: 837 Traction Avenue, #410, Los Angeles, CA 90013 • OC Phone: 949.496.6191 • SD Office: 804 Pier View Way #103, Oceanside, CA 92054 • LA Phone: 213.278.0172 • Web: pjhm.com

HIGHLAND HIGH SCHOOL
50M POOL & AQUATICS CENTER

KERN HIGH SCHOOL DISTRICT

OPENING DETAILS

A-10.3

4/13/2023 9:06:06 AM

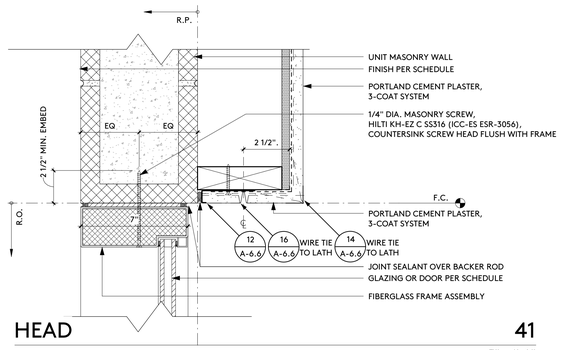

HEAD 41

3" = 1'-0"

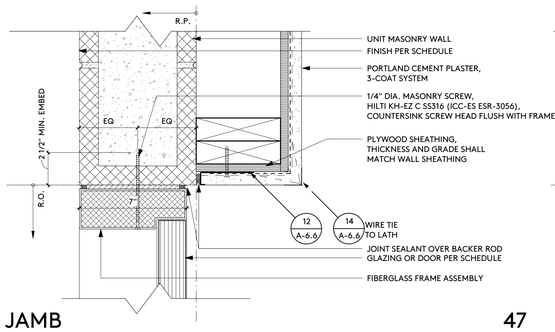

JAMB 47

3" = 1'-0"

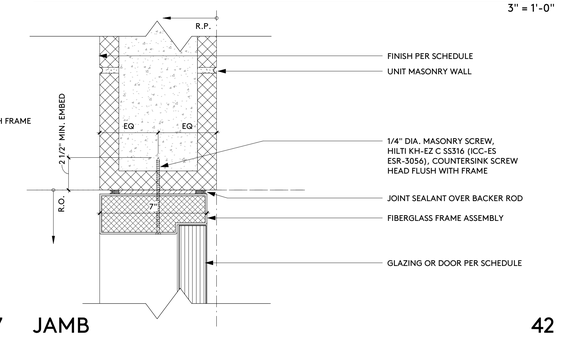

JAMB 42

3" = 1'-0"

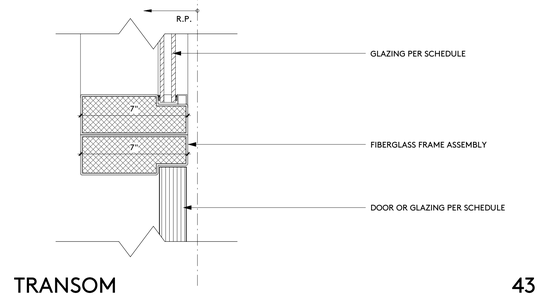

TRANSOM 43

3" = 1'-0"

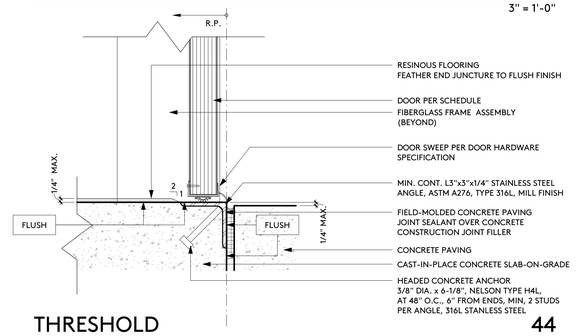

THRESHOLD 44

3" = 1'-0"

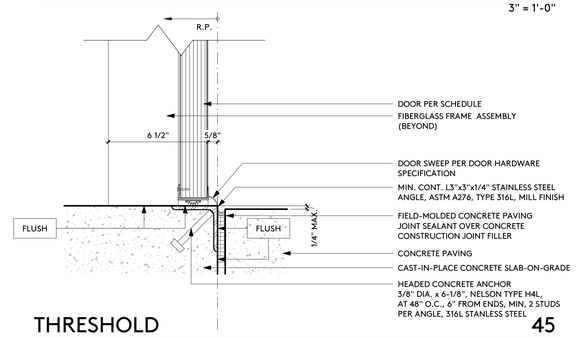

THRESHOLD 45

3" = 1'-0"

IDENTIFICATION STAMP
DIV. OF THE STATE ARCHITECT
APP: 03-122664 INC:
REVIEWED FOR
SS ☑ FLS ☑ ACS ☑
DATE: 05/12/2023

pjhm architects

LICENSED ARCHITECT
RICHARD W. PRIMM
NO. C15585
REN. 02/25
STATE OF CALIFORNIA

OC Office: 24461 Ridge Route Drive #100, Laguna Hills, CA 92653 • OC Phone: 949.496.6191 • SD Office: 804 Pier View Way #103, Oceanside, CA 92054 • SD Phone: 760.730.5527 • LA Office: 837 Traction Avenue, #410, Los Angeles, CA 90013 • LA Phone: 213.278.0172 • Web: pjhm.com

HIGHLAND HIGH SCHOOL
50M POOL & AQUATICS CENTER

KERN HIGH SCHOOL DISTRICT

OPENING DETAILS

A-10.4

4/13/2023 9:06:06 AM

OC Office: 24461 Ridge Route Drive #100, Laguna Hills, CA 92653 • OC Phone: 949.496.6191 • SD Office: 804 Pier View Way #103, Oceanside, CA 92054 • SD Phone: 760.730.5527 • LA Office: 837 Traction Avenue, #410, Los Angeles, CA 90013 • LA Phone: 213.278.0172 • Web: pjhm.com

IDENTIFICATION STAMP
DIV. OF THE STATE ARCHITECT
APP: 03-122664 INC: 1
REVIEWED FOR
SS ☑ FLS ☑ ACS ☑
DATE: 05/12/2023

pjhm architects

LICENSED ARCHITECT
JOSEPH N. QUIROZ
No. C-35185
REN: 08/26
STATE OF CALIFORNIA

HIGHLAND HIGH SCHOOL
50M POOL & AQUATICS CENTER

KERN HIGH SCHOOL DISTRICT

1 ADDENDUM NO. 1

FINISH SCHEDULE

A-11.0

FINISH SCHEDULE

ROOM NUMBER	ROOM NAME	FLOORS												WALLS						BASE						CEILINGS						NOTE: ALL FINISHES, MUST COMPLY WITH THE 2019 C.B.C, C.F.C AND TITLE 19 REQUIREMENTS
		A	B	C	D	E	F	G	H	J	K	L	M	N	P	G	R	S	T	U	V	W	X	Y	Z	AA	BB	CC	DD	EE	FF	GG	HH	JJ	KK	LL	MM
		EPOXY COATING	RESILIOUS FLOORING	CERAMIC TILING	-	-	-	-	-	-	POLISHED CONCRETE FINISHING	-	-	GYPSUM BOARD - INTERIOR PAINT FINISH	CERAMIC TILING	CONCRETE UNIT MASONRY - INTERIOR PAINT FINISH	CONCRETE UNIT MASONRY - CRYSTALLINE WATERPROOFING FINISH	CAST-IN-PLACE CONCRETE - CRYSTALLINE WATERPROOFING FINISH	GYPSUM SHEATHING - INTERIOR PAINT FINISH	-	RESILIENT BASE	-	-	RESILIOUS FLOORING	CERAMIC TILING	-	-	GYPSUM BOARD - INTERIOR PAINT FINISH	METAL ACOUSTICAL CEILING SUSPENSION ASSEMBLY, ACOUSTICAL CEILING PANEL/MIL RATED PANEL, LAY-IN	METAL ACOUSTICAL CEILING SUSPENSION ASSEMBLY, ACOUSTICAL CEILING PANEL/MIL RATED PANEL, TNGCH/H KOTKED	GYPSUM SHEATHING - INTERIOR PAINT FINISH	-	-	-	UNDERSIDE OF ROOF FRAMING - NO PAINT FINISH	-	
A-01	CUSTODIAL	●												●						-	●							-	●								
A-02	GIRLS RESTROOM			●											●	●									●												
A-03	GIRLS LOCKER ROOM			●											●	●									●												
A-04	STORAGE										●			-	●	●									●												
A-05	OFFICE										●			●	●	●					●	●									●						
A-07	BOYS LOCKER ROOM			●										-	●	●									●						-	●					
A-08	BOYS RESTROOM			●											●	●									●												
A-09	UTILITY	●																		-	●														●		

ROOM NUMBER	ROOM NAME	FLOORS												WALLS						BASE						CEILINGS						NOTE: ALL FINISHES SHALL COMPLY W CBC, CFC, AND TITLE 19.
		A	B	C	D	E	F	G	H	J	K	L	M	N	P	G	R	S	T	U	V	W	X	Y	Z	AA	BB	CC	DD	EE	FF	GG	HH	JJ	KK	LL	MM
B-01	RESTROOM			●										●							●				●				●								
B-02	RESTROOM			●										●							●				●				●								
B-03	CLASSROOM										●				●	●																					
B-04	RESR/UTILITY										●				●	●																					
B-05	UTILITY		●												●	●					●	●									●						
B-06	ELECTRICAL/DATA		●												●	●					●	●									●						
B-07	RESTROOM			●											●	●									●				●								
B-08	RESTROOM			●											●	●									●				●								
B-09	LIGHT SCAFFOLDING										●			-	●	●					-	●				●				●							-	

ROOM NUMBER	ROOM NAME	FLOORS												WALLS						BASE						CEILINGS						NOTE: ALL FINISHES SHALL COMPLY W CBC, CFC, AND TITLE 19.
		A	B	C	D	E	F	G	H	J	K	L	M	N	P	G	R	S	T	U	V	W	X	Y	Z	AA	BB	CC	DD	EE	FF	GG	HH	JJ	KK	LL	MM
C-01	PUMP ROOM	●														●	●		●		●								-			●					
C-02	CHLORINE STORAGE		-													●					-			●					-			●					
C-03	ACID STORAGE		-													●					-			●					-			●					

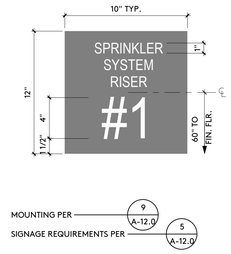

FIRE SPRINKLER RISER ROOM — L

1" = 0'-2"

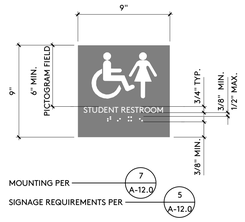

RESTROOM - UNISEX - ISA — M

1" = 0'-2"

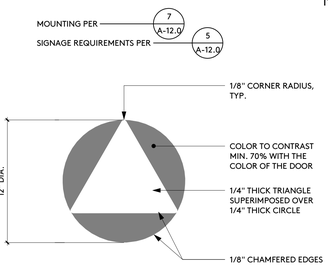

RESTROOM - DOOR - UNISEX — N

1" = 0'-2"

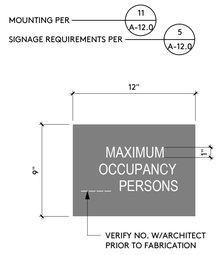

OCCUPANCY — P

1" = 0'-2"

1. ASSISTIVE-LISTENTING SYSTEMS SHALL BE PROVIDED IN ACCORDANCE WITH CBC SECTION 11B-219 AND SHALL COMPLY WITH CBC SECTION 11B-706.
2. THE MINIMUM NUMBER OF RECEIVERS TO BE PROVIDED SHALL BE EQUAL TO 4% OF THE TOTAL NUMBER OF SEATS, BUT IN NO CASE LESS THAN TWO. 25% MINIMUM OF THE RECEIVERS PROVIDED, BUT NO LESS THAN TWO, SHALL BE HEARING-AID COMPATIBLE IN ACCORDANCE WITH CBC SECTION 11B-706.3
3. IF THE SYSTEM PROVIDED IS LIMITED TO SPECIFIC AREAS OR SEATS, THEN SUCH AREAS OR SEATS SHALL BE WITHIN A 50-FOOT VIEWING DISTANCE OF, AND HAVE A COMPLETE VIEW OF, THE STAGE OR PLAYING AREA. CBC SECTION 11B-219.4

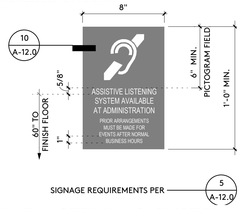

ASSISTIVE LISTENING SYSTEM — Q

1" = 0'-2"

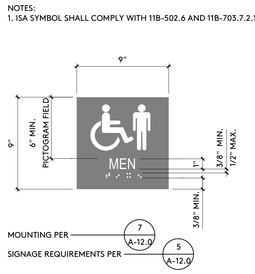

RESTROOM - MEN - ISA — F

1" = 0'-2"

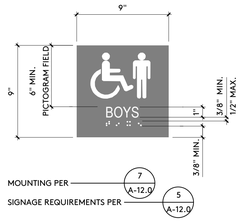

RESTROOM - BOYS - ISA — G

1" = 0'-2"

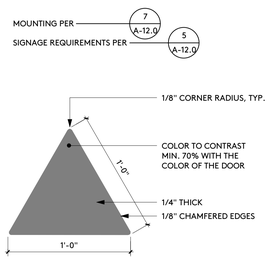

RESTROOM - DOOR - MALE — H

1" = 0'-2"

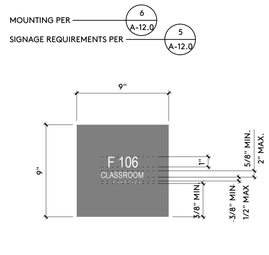

TYPICAL ROOM — J

1" = 0'-2"

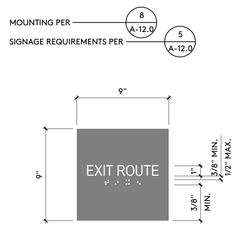

EXIT ROUTE — K

1" = 0'-2"

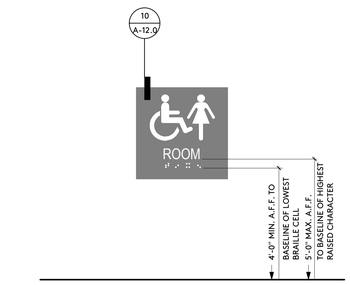

MOUNTING HEIGHTS — 11

1" = 0'-2"

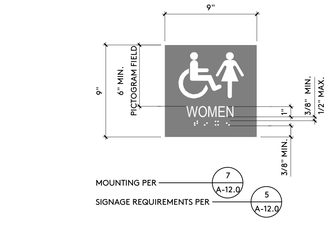

RESTROOM - WOMEN - ISA — A

1" = 0'-2"

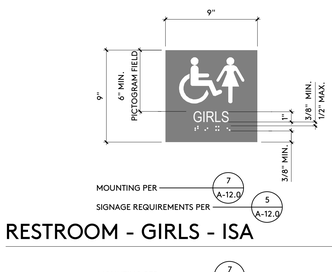

RESTROOM - GIRLS - ISA — B

1" = 0'-2"

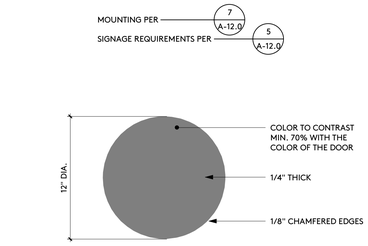

RESTROOM - DOOR - FEMALE — C

1" = 0'-2"

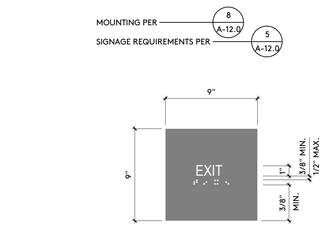

EXIT — E

1" = 0'-2"

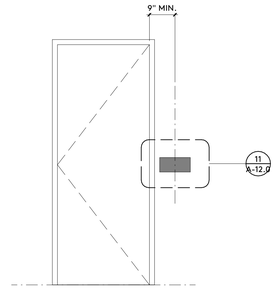

TYPICAL DOOR — 6

1/2" = 1'-0"

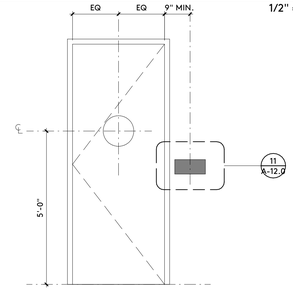

RESTROOM DOOR — 7

1/2" = 1'-0"

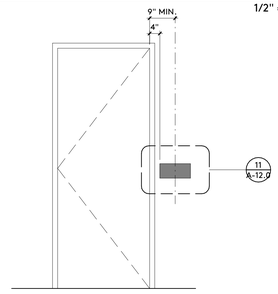

EXIT DOORS — 8

1/2" = 1'-0"

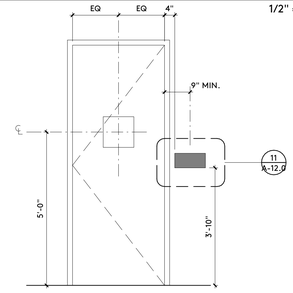

FIRE RISER DOOR — 9

1/2" = 1'-0"

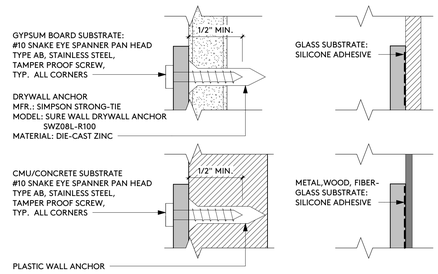

SIGN ANCHORAGE — 10

12" = 1'-0"

SIGNAGE NOTES:

1. ATTACH WITH (4) #10 TAMPER PROOF STAINLESS STEEL SCREWS.
2. PROVIDE METAL OR WOOD BACKING AT WALL SIGNS.
3. **RAISED CHARACTERS** SHALL COMPLY WITH **CBC SECTION 11B-703.2:**
   -DEPTH: IT SHALL BE 1/32 INCH (0.8MM) MINIMUM ABOVE THEIR BACKGROUND AND SHALL BE SANS SERIF UPPERCASE AND BE DUPLICATED IN BRAILLE.
   -HEIGHT: IT SHALL BE 5/8 INCH (15.9MM) MINIMUM AND 2 INCHES (51MM) MAXIMUM BASED ON THE HEIGHT OF THE UPPERCASE LETTER "I". CBC SECTION 11B-703.2.5
   -FINISH AND CONTRAST: CHARACTERS AND THEIR BACKGROUND SHALL HAVE A NON-GLARE FINISH. CHARACTER SHALL CONTRAST WITH THEIR BACKGROUND WITH EITHER LIGHT CHARACTERS ON A DARK BACKGROUND OR DARK CHARACTERS ON A LIGHT BACKGROUND. **CBC SECTION 11B-703.5.1.**
4. **PROPORTIONS:** IT SHALL BE SELECTED FROM FONTS WHERE THE WIDTH OF THE UPPERCASE LETTER "O" IS 60% MINIMUM AND 110% MAXIMUM OF THE HEIGHT OF THE UPPERCASE "I". STROKE THICKNESS OF THE UPPERCASE LETTER "I" SHALL BE 15% MAXIMUM OF THE HEIGHT OF THE CHARACTER. **CBC SECTIONS 11B-703.4 AND 11B-703.6**
5. **CHARACTER SPACING:** SPACING BETWEEN INDIVIDUAL TACTILE CHARACTERS SHALL COMPLY WITH **CBC SECTION 11B-703.2.7.**
6. **LINE SPACING:** SPACING BETWEEN INDIVIDUAL RAISED CHARACTERS SHALL COMPLY WITH **CBC SECTION 11B-703.2.8.**
7. **BRAILLE:** IT SHALL BE CONTRACTED (GRADE 2) AND SHALL COMPLY WITH **CBC SECTIONS 1B-703.3** AND **11B-703.4.** BRAILLE DOTS SHALL HAVE A DOMED AND ROUNDED SHAPE AND SHALL COMPLY WITH **CBC TABLE AND FIGURE 11B-703.3.1.**
8. **MOUNTING HEIGHT:** A TACTILE SIGN SHALL BE LOCATED 48" MINIMUM TO THE BASELINE OF THE LOWEST BRAILLE CELLS AND 60" MAXIMUM TO THE BASELINE OF THE HIGHEST LINE OF THE RAISED CHARACTERS ABOVE THE FINISH FLOOR OR GROUND SURFACE.
9. **MOUNTING LOCATION:** A TACTILE SIGN SHALL BE LOCATED ON THE APPROACH SIDE, AS ONE ENTERS OR EXITS ROOMS OS SPACE, AND BE REACHED WITHIN 0" OF THE REQUIRED CLEAR FLOOR SPACE PER **CBC SECTION AND FIGURE 11B-703.4.2** AS FOLLOWS:
   - A CLEAR FLOOR SPACE OF 18" X 18" MINIMUM, CENTERED ON THE TACTILE CHARACTERS, SHALL BE PROVIDED BEYOND THE ARC OF ANY DOOR SWINGS BETWEEN THE CLOSED POSITION AND 45 DEGREE OPEN POSITION.
   - ON THE WALL AT THE LATCH SIDE OF A SINGLE DOOR.
   - ON THE INACTIVE LEAF OF A DOUBLE DOOR WITH ONE ACTIVE LEAF.
   - ON THE WALL AT THE RIGHT SIDE OF A DOUBLE DOOR WITH TWO ACTIVE LEAFS.
   - ON THE NEAREST ADJACENT WALL WHERE THERE IS NO WALL SPACE AT THE LATCH SIDE OF A SINGLE DOOR OR NO SPACE AT THE RIGHT SIDE OF A DOUBLE DOOR WITH TWO ACTIVE LEAFS.
10. **VISUAL CHARACTERS** SHALL COMPLY WITH **CBC SECTION 11B-703.5**
    -VISUAL CHARACTERS SHALL BE 40" MINIMUM FINISH FLOOR OR GROUND.
    -CHARACTER HEIGHT SHALL BE DETERMINED BASED UPON HEIGHT ABOVE GROUND AND HORIZONTAL VIEWING DISTANCE PER CBC TABLE 11B-705.5.5.
    -PROPORTIONS FOR VISUAL CHARACTERS SHALL BE SELECTED FROM FONTS WHERE THE WIDTH OF THE UPPERCASE LETTER "O" IS 60% MINIMUM AND 110% MAXIMUM OF THE HEIGHT OF THE UPPERCASE LETTER "I". CBC SECTION 11B-703.5.4.
    -STROKE THICKNESS OF THE UPPERCASE LETTER "I" SHALL BE 10% MINIMUM AND 20% MAXIMUM OF THE HEIGHT OF THE CHARACTER. CBC SECTION 11B-703.5.7.
    -LINE SPACING BETWEEN THE BASELINES OF SEPARATE LINES OF CHARACTERS WITHIN A MESSAGE SHALL BE 135% MIN. AND 170% MAX. OF THE CHARACTER HEIGHT PER CBC SECTION 11B-703.5.9.
    -CHARACTER SPACING BETWEEN INDIVIDUAL ADJACENT CHARACTERS SHALL BE 10% MIN. AND 35% MAX. OF CHARACTER HEIGHT PER **CBC SECTION 11B-703.5.8.**
11. **PICTOGRAMS** SHALL COMPLY WITH **CBC SECTION 11B-703.6.**
12. **SYMBOL OF ACCESSIBILITY** SHALL COMPLY WITH **CBC SECTION 11B-703.7.**
    - THE SYMBOL SHALL CONSIST OF A LIGHT FIGURE ON A DARK BACKGROUND OR A DARK FIGURE ON A LIGHT BACKGROUND. **CBC SECTION 11B-703.7.2.1 EXCEPTION 1.**

TEMPLATE FOR CHECKING CHARACTER AND STROKE WIDTH TO HEIGHT PROPORTIONS

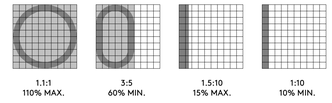

1:1:1 110% MAX. | 3:5 60% MIN. | 1.5:10 15% MAX. | 1:10 10% MIN.

13. **11B-703.3 BRAILLE.** BRAILLE SHALL BE CONTRACTED (GRADE 2) AND SHALL COMPLY WITH **CBC SECTIONS 11B-703.3 AND 11B-703.4.**
14. **11B-703.3.1 DIMENSIONS AND CAPITALIZATION.** BRAILLE DOTS SHALL HAVE A DOMED OR ROUNDED SHAPE AND SHALL COMPLY WITH TABLE 11B-703.3.1. THE INDICATION OF AN UPPERCASE LETTER OR LETTERS SHALL ONLY BE USED BEFORE THE FIRST WORD OF SENTENCES, PROPER NOUNS AND NAMES, INDIVIDUAL LETTERS OF THE ALPHABET, INITITALS, AND ACRONYMS.

MEASUREMENT RANGE	MINIMUM IN INCHES MAXIMUM IN INCHES
DOT BASE DIAMETER	0.059 (1.5 mm) TO 0.063 (1.6 mm)
DISTANCE BETWEEN TWO DOTS IN THE SAME CELL[1]	0.100 (2.5 mm)
DISTANCE BETWEEN CORRESPONDING DOTS IN ADJACENT CELLS[1]	0.300 (7.6 mm)
DOT HEIGHT	0.025 (0.6 mm) TO 0.037 (0.9 mm)
DISTANCE BETWEEN CORRESPONDING DOTS FROM ONE CELL DIRECTLY BELOW[1]	0.395 (10 mm) TO 0.400 (10.2 mm)

1. MEASURED CENTER TO CENTER

TABLE 11B-703.3.1
BRAILLE DIMENSIONS

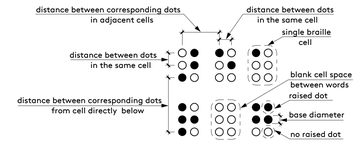

FIGURE 11B-703.3.1
BRAILLE MEASUREMENT

15. **11B-703.3.2 POSITION.** BRAILLE SHALL BE POSITIONED BELOW THE CORRESPONDING TEXT IN A HORIZONTAL FORMAT, FLUSH LEFT OR CENTERED. IF TEXT IS MULTI-LINED, BRAILLE SHALL BE PLACED BELOW THE ENTIRE TEXT. BRAILLE SHALL BE SEPARATED 3/8 INCH (9.5 mm) MINIMUM AND 1/2 INCH (12.7 mm) MAXIMUM FROM ANY OTHER TACTILE CHARACTERS AND 3/8 INCH (9.5 mm) MINIMUM FROM RAISED BORDERS AND DECORATIVE ELEMENTS.
16. **MATERIAL NOTES:**

SIZE:	AS INDICATED
FONT:	HELVETICA (OR SIMILAR, SANS SERIF STYLE, VERIFY WITH ARCHITECT)
SHEEN:	MATTE
GRAPHICS:	RAISED 1/32" PRINTED GRAPHICS ON CONTRASTING BACKGROUND
TEXT COLOR:	PER ARCHITECT
BACKGROUND COLOR:	PER ARCHITECT
MATERIAL THICKNESS:	1/4"

GENERAL NOTES — 5

1" = 0'-2"

IDENTIFICATION STAMP
DIV. OF THE STATE ARCHITECT
APP: 03-122664 INC:
REVIEWED FOR
SS ☑ FLS ☑ ACS ☑
DATE: 05/12/2023

pjhm architects
LA Office: 837 Traction Avenue, #410, Los Angeles, CA 90013 • LA Phone: 213.278.0172 • Web: pjhm.com
SD Office: 804 Pier View Way #103, Oceanside, CA 92054 • SD Phone: 760.730.5527
OC Office: 24461 Ridge Route Drive #100, Laguna Hills, CA 92653 • OC Phone: 949.496.6191

LICENSED ARCHITECT
RICHARD W. FRIEDMAN
NO. C15585
REN. 02/25
STATE OF CALIFORNIA

HIGHLAND HIGH SCHOOL
50M POOL & AQUATICS CENTER

KERN HIGH SCHOOL DISTRICT

TACTILE SIGNAGE DETAILS

A-12.0

4/13/2023 9:06:08 AM

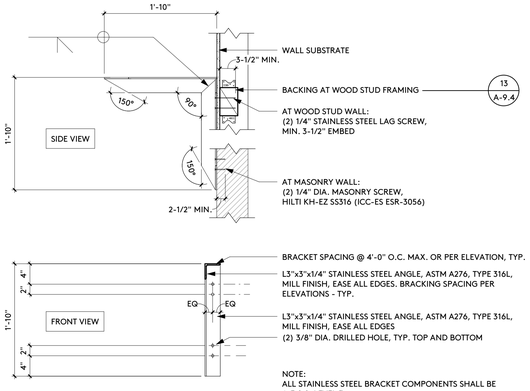

COUNTERTOP SUPPORT BRACKET 13

1" = 1'-0"

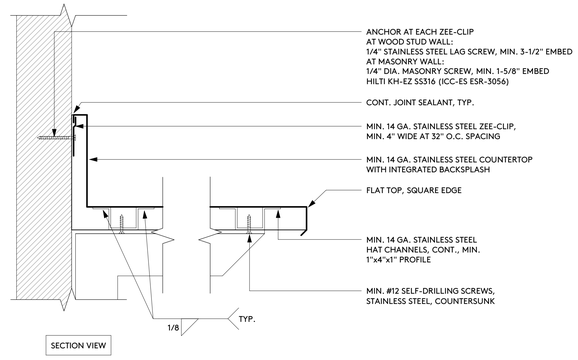

ANCHORAGE - COUNTERTOP 9

3" = 1'-0"

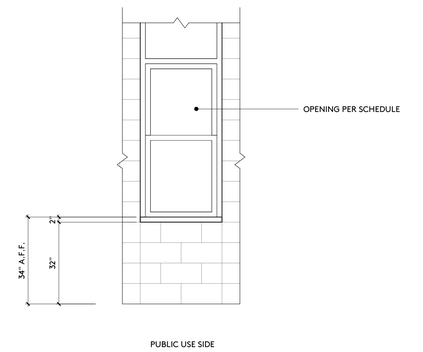

ELEVATION - COUNTERTOP 5

1/2" = 1'-0"

STAINLESS STEEL COUNTERTOP GENERAL NOTES

1. ALL MATERIAL SHALL BE MINIMUM 14 GAUGE TYPE 304 STAINLESS STEEL
2. SQUARE EDGE ON FRONT OF COUNTERTOP
3. COUNTERTOP ENDS TURNED DOWN 90 DEGREES
4. TOP SHALL BE REINFORCED WITH WELDED-ON HAT CHANNELS
5. COUNTERTOP SHALL HAVE INTEGRAL 6-INCH HIGH BACKSPLASH AND END SPLASH WHERE SHOWN
6. COUNTERTOP SHALL HAVE NSF CERTIFICATIONS/APPROVALS
7. COUNTERTOP SHALL INCLUDE INTEGRAL SINK BOWLS
8. COUNTERTOP SHALL HAVE LATEX SOUND DEADENING
9. NO TRIM PERMITTED, 1/8" MAX. TOLERANCE
10. HYDRAULIC KNOCK-OUTS FOR ALL UTILITIES AT COUNTERTOPS

WOOD PANELING EDGE DIAGRAM 1

3/8" = 1'-0"

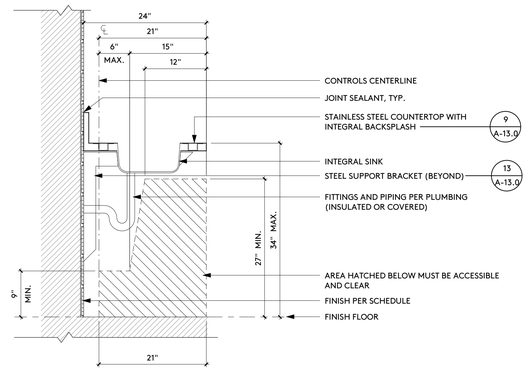

SECTION - COUNTERTOP 14

1" = 1'-0"

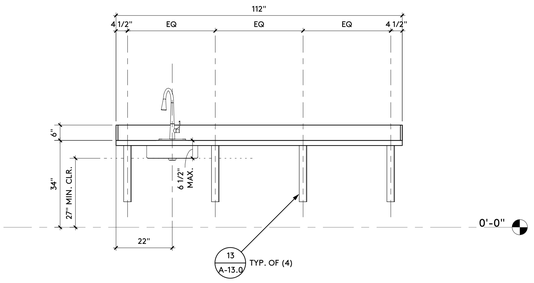

ELEVATION - COUNTERTOP 10

1/2" = 1'-0"

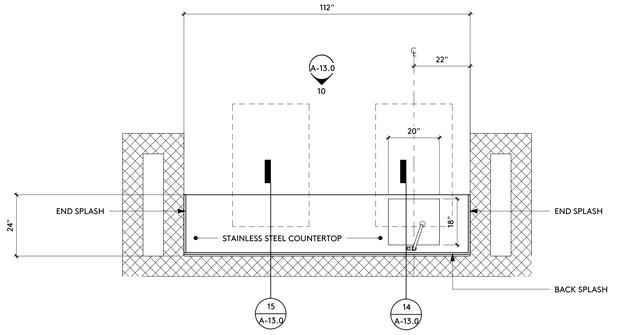

PLAN - COUNTERTOP

1/2" = 1'-0"

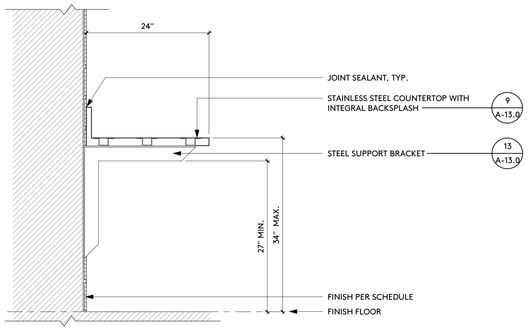

SECTION - COUNTERTOP 15

1" = 1'-0"

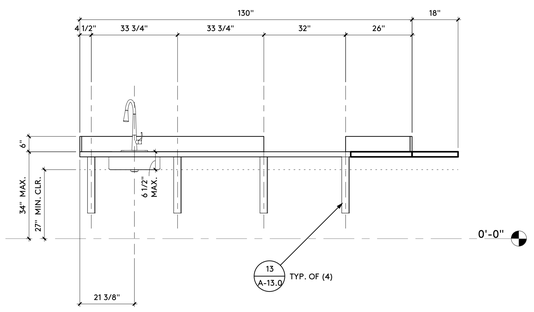

EMPLOYEE WORKSTATION SIDE

ELEVATION - COUNTERTOP 11

1/2" = 1'-0"

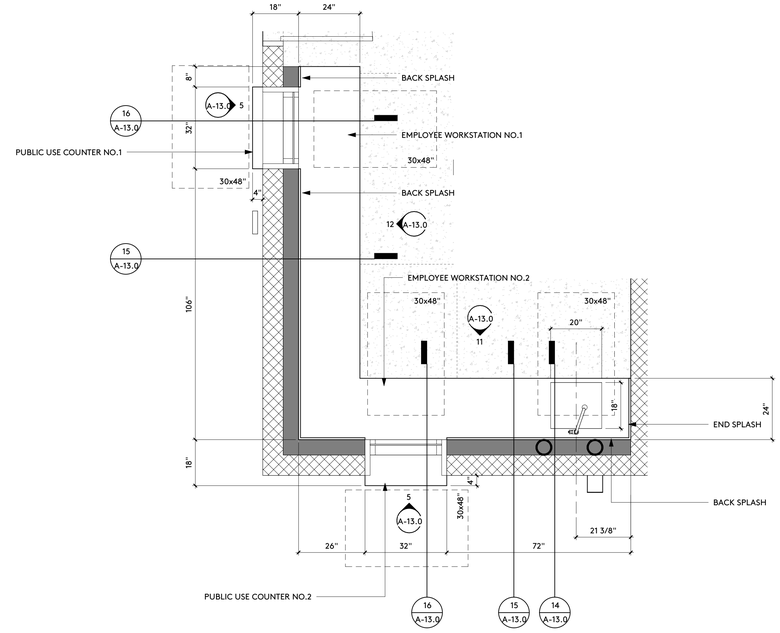

PLAN - COUNTERTOP

1/2" = 1'-0"

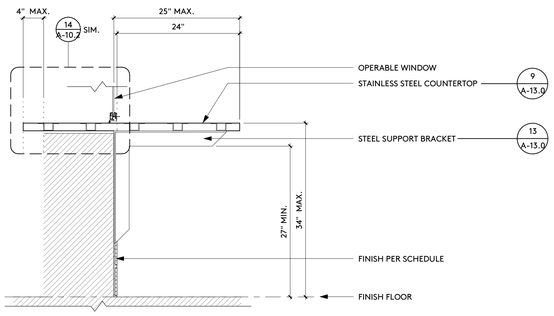

SECTION - COUNTERTOP 16

1" = 1'-0"

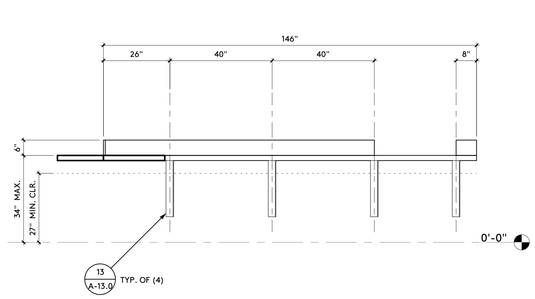

EMPLOYEE WORKSTATION SIDE

ELEVATION - COUNTERTOP 12

1/2" = 1'-0"

IDENTIFICATION STAMP
DIV. OF THE STATE ARCHITECT
APP: 03-122664 INC:
REVIEWED FOR
SS ☑ FLS ☑ ACS ☑
DATE: 05/12/2023

pjhm architects

LICENSED ARCHITECT
RICHARD W. PRIMM
NO. C15585
REN. 02/25
STATE OF CALIFORNIA

LA Office: 837 Traction Avenue, #410, Los Angeles, CA 90013 • LA Phone: 213.278.0172 • Web: pjhm.com

SD Phone: 760.730.5527 • OC Office: 24461 Ridge Route Drive #100, Laguna Hills, CA 92653 • OC Phone: 949.496.6191 • SD Office: 804 Pier View Way #103, Oceanside, CA 92054

HIGHLAND HIGH SCHOOL
50M POOL & AQUATICS CENTER

KERN HIGH SCHOOL DISTRICT

COUNTERTOP DETAILS

A-13.0

4/13/2023 9:06:09 AM

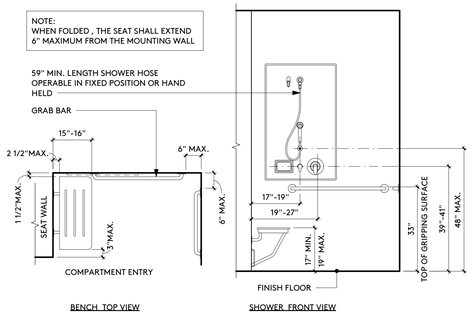

ACCESSIBLE SHOWER 9

1/2" = 1'-0"

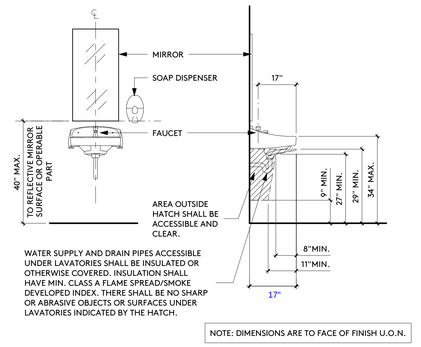

NOTE: DIMENSIONS ARE TO FACE OF FINISH U.O.N.

ACCESSIBLE RESTROOM - LAVATORY 5

1/2" = 1'-0"

	ADULT	AGES 3 - 4	AGES 5 - 8	AGES 9 - 12
TOILET OFFSET	17"-18"	12"	12"-15"	15"-18"
TOILET SEAT HEIGHT	17"-19"	11"-12"	12"-15"	15"-17"
TOP OF GRAB BAR GRIPPING SURFACE	33"-36"	18"-20"	20"-25"	25"-27"
T.P. DISPENSER OUTLET	19" MIN.	14"	14"-17"	17"-19"
FURTHEST T.P. DISPENSER IN FRONT OF W.C.	7"-9" TO CENTERLINE	7"-9" TO CENTERLINE	7"-9" TO CENTERLINE	7"-9" TO CENTERLINE
LAV/SINK RIM HEIGHT	34" MAX.	31" MAX.	31" MAX.	31" MAX.
LAV/SINK KNEE CLEARANCE	27" MIN. (29" MIN. AT APRON FOR AVATORY)	PARALLEL APPROACH PERMITTED	AGE 6-8, 24" MIN, AGE 5, PARALLEL APPROACH PERMITTED	24" MIN
URINAL HEIGHT	17" MAX.	17" MAX.	17" MAX.	17" MAX.
URINAL PROJECTION	13-1/2" MIN.	13-1/2" MIN.	13-1/2" MIN.	13-1/2" MIN.
URINAL FLUSH CONTROL HEIGHT	44" MAX.	44" MAX.	44" MAX.	44" MAX.
HIGH D.F. SPOUT HEIGHT	38"-43"	38"-43"	38"-43"	38"-43"
LOW D.F. APPROACH, SPOUT HEIGHT, AND SPOUT LOCATION FROM FRONT EDGE OF THE UNIT INCLUDING BUMPERS	FRONT APPROACH PER 11B-306, 36" MAX. A.F.F. & 5" MAX. FROM FRONT EDGE OF THE UNIT	PARALLEL APPROACH IS PERMITTED IF S OMIT 1 FRONT EDGE OF THE UNIT	PARALLEL APPROACH IS PERMITTED IF S OMIT 1 FRONT EDGE OF THE UNIT	PARALLEL APPROACH IS PERMITTED IF S OMIT 1 FRONT EDGE OF THE UNIT
D.F. OPERABLE PARTS	6" MAX. FROM FRONT EDGE OF THE UNIT	6" MAX. FROM FRONT EDGE OF THE UNIT	6" MAX. FROM FRONT EDGE OF THE UNIT	6" MAX. FROM FRONT EDGE OF THE UNIT
CANTILEVER D.F. PROJECTION	18"-19"	-	-	-
TOE CLEARANCE TO TOILET PARTITION	9" MIN.	12" MIN.	12" MIN.	12" MIN.
SHELF HEIGHT	40"-48"	40"-48"	40"-48"	40"-48"
MIRROR HEIGHT (BOTTOM EDGE OF REFLECTING SURFACE)	40" MAX. (ABOVE LAV OR COUNTERTOP) 35" MAX. (NOT ABOVE LAV NOR COUNTERTOP)	40" MAX. (ABOVE LAV OR COUNTERTOP) 35" MAX. (NOT ABOVE LAV NOR COUNTERTOP)	40" MAX. (ABOVE LAV OR COUNTERTOP) 35" MAX. (NOT ABOVE LAV NOR COUNTERTOP)	40" MAX. (ABOVE LAV OR COUNTERTOP) 35" MAX. (NOT ABOVE LAV NOR COUNTERTOP)
MIRROR HEIGHT (BOTTOM EDGE OF REFLECTING SURFACE) IN DRESSING, FITTING, & LOCKER ROOMS	20" MAX.	20" MAX.	20" MAX.	20" MAX.

NOTE: ALL HEIGHT DIMENSIONS ARE A.F.F. (OR A.F.G. FOR EXTERIOR).
ALL HORIZONTAL DIMENSIONS ARE TO FACE OF FINISH

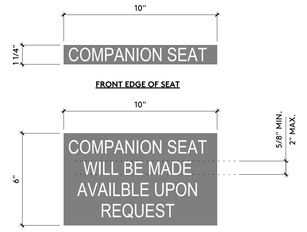

FONT: PER ARCHITECT (SANS SERIF STYLE)
SHEEN: MATTE
TEXT COLOR: WHITE
BACKGROUND COLOR: PER ARCHITECT

COMPANION SIGNAGE 6

3" = 1'-0"

ACCESSIBLE DIMENSIONS 2

12" = 1'-0"

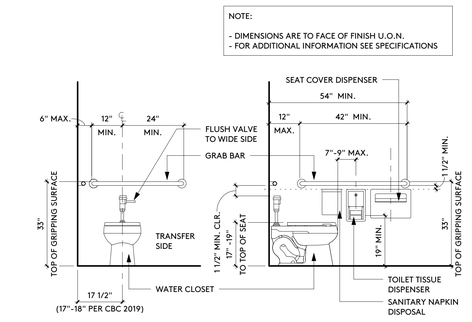

ACCESSIBLE WATER CLOSET 11

1/2" = 1'-0"

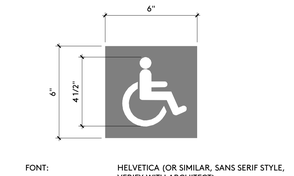

FONT: HELVETICA (OR SIMILAR, SANS SERIF STYLE, VERIFY WITH ARCHITECT)
SHEEN: MATTE
GRAPHICS: WHITE
BACKGROUND COLOR: BLUE FED. COLOR 15090 OF FED. STD. 595C

NOTE: WHERE USED, ISA SHALL MATCH COLOR AND PROPORTIONS PER FIG. 11B-703.7.2.1

ISA SIGNAGE 7

3" = 1'-0"

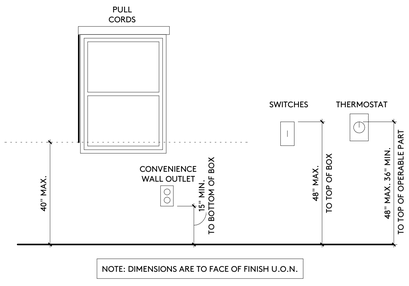

NOTE: DIMENSIONS ARE TO FACE OF FINISH U.O.N.

CONTROLS/SWITCHES/OUTLETS 3

1/2" = 1'-0"

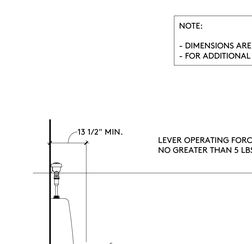

ACCESSIBLE URINAL 12

1/2" = 1'-0"

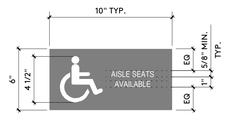

AISLE SEAT AVAILABILITY 8

1" = 0'-2"

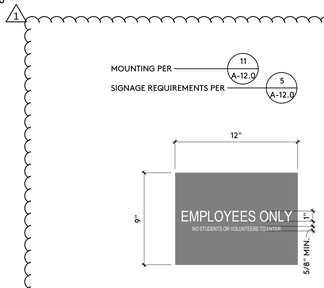

EMPLOYEES ONLY 4

1" = 0'-2"

IDENTIFICATION STAMP
DIV. OF THE STATE ARCHITECT
APP: 03-122664 INC:
REVIEWED FOR
SS ☑ FLS ☑ ACS ☑
DATE: 05/12/2023

pjhm architects
LICENSED ARCHITECT
RICHARD W. FRIEDMAN
NO. C15585
REN. 02/25
STATE OF CALIFORNIA
OC Office: 24461 Ridge Route Drive #100, Laguna Hills, CA 92653 • LA Office: 837 Traction Avenue, #410, Los Angeles, CA 90013 • SD Office: 804 Pier View Way #103, Oceanside, CA 92054
SD Phone: 760.730.5527 • OC Phone: 949.496.6191 • LA Phone: 213.278.0172 • Web: pjhm.com

HIGHLAND HIGH SCHOOL
50M POOL & AQUATICS CENTER

KERN HIGH SCHOOL DISTRICT

1 ADDENDUM NO. 1

ACCESSIBILITY DETAILS

A-14.0

4/13/2023 9:06:10 AM

GENERAL NOTES:

1. DETAILS OF CONSTRUCTION NOT SHOWN SHALL BE OF SAME NATURE AS THOSE SHOWN FOR SIMILAR CONDITIONS. REFER TO THE TYPICAL DETAIL SHEETS FOR TYPICAL DETAILS OF CONSTRUCTION. TYPICAL DETAILS APPLY TO ALL CONSTRUCTION UNLESS SPECIFICALLY NOTED OR SHOWN OTHERWISE. WHERE CONDITIONS REQUIRE MODIFICATIONS OF A TYPICAL DETAIL, THE CONTRACTOR SHALL SUBMIT MODIFIED DETAIL FOR APPROVAL BY THE ENGINEER OF RECORD PRIOR TO FABRICATION AND INSTALLATION. DETAILS OF CONSTRUCTION NOT SHOWN SHALL BE OF SAME NATURE AS THOSE SHOWN FOR SIMILAR CONSTRUCTION.

2. CONTRACTOR SHALL CONSIDER THE PROJECT SPECIFICATIONS A PART OF THE CONTRACT DOCUMENTS. WHERE INFORMATION IS CONFLICTING, SPECIFIC DETAILS SHALL GOVERN OVER TYPICAL DETAILS WHICH SHALL GOVERN OVER THESE NOTES WHICH SHALL GOVERN OVER SPECIFICATIONS.

3. ALL DIMENSIONS ON STRUCTURAL DRAWINGS SHALL BE CHECKED AGAINST ARCHITECTURAL DIMENSIONS. DO NOT SCALE DRAWINGS. IF DIMENSIONS ARE OMITTED OR NOT CLEAR, CONTACT THE ARCHITECT (ARCH) OR STRUCTURAL ENGINEER OF RECORD (SEOR). ALL DIMENSIONS RELATED TO EXISTING CONDITIONS SHALL BE FIELD VERIFIED BY THE CONTRACTOR. DIMENSIONS ARE TO THE FACE OF STUDS, AND TO CENTERLINE OF COLUMNS UNO.

4. IT IS THE CONTRACTOR'S RESPONSIBILITY TO IMMEDIATELY NOTIFY THE SEOR OF ANY CONFLICTS BETWEEN THE STRUCTURAL DRAWINGS AND OTHER DRAWINGS; OR EXISTING CONDITIONS NOT SHOWN OR DIFFERENT FROM THOSE SHOWN ON DRAWINGS PRIOR TO COMMENCEMENT OF WORK. THE CONTRACTOR IS NOT TO ORDER MATERIAL OR CONSTRUCT ANY PORTION OF THE BUILDING THAT IS IN CONFLICT UNTIL THE CONFLICT IS RESOLVED WITH THE AFFECTED PARTIES.

5. THE STRUCTURAL DRAWINGS AND SPECIFICATIONS REPRESENT THE FINISHED STRUCTURE. UNLESS OTHERWISE SHOWN THEY DO NOT INDICATE METHOD OF CONSTRUCTION. THE CONTRACTOR SHALL PROVIDE ALL MEASURES NECESSARY TO PROTECT THE CONSTRUCTION AND ALL ADJACENT PROPERTIES DURING CONSTRUCTION. SUCH MEASURES SHALL INCLUDE BUT ARE NOT LIMITED TO BRACING, SHORING OF LOADS DUE TO CONSTRUCTION EQUIPMENT, ETC. OBSERVATION VISITS TO THE SITE BY THE ARCHITECT OR SEOR SHALL NOT INCLUDE OBSERVATION OF THE ABOVE ITEMS.

6. SUBSTITUTION REQUESTS FOR MATERIALS SPECIFIED ON THE STRUCTURAL DRAWINGS MAY BE CONSIDERED WITH MATERIALS HAVING EQUIVALENT OR GREATER CAPACITY AND PERFORMANCE. CURRENT EVALUATION REPORTS AND PRODUCT INFORMATION SHALL BE PROVIDED TO THE STRUCTURAL ENGINEER DEMONSTRATING THE REQUIRED EQUIVALENCY AND PERFORMANCE OF THE MATERIAL TO BE SUBSTITUTED. WRITTEN APPROVAL FROM THE SEOR SHALL BE OBTAINED PRIOR TO THE SUBSTITUTION OF ANY MATERIAL SPECIFIED ON THE STRUCTURAL DOCUMENTS.

7. IT IS THE CONTRACTOR'S RESPONSIBILITY TO COMPLY WITH THE PERTINENT SECTIONS OF THE "CONSTRUCTION SAFETY ORDERS" ISSUED BY THE STATE OF CALIFORNIA, LATEST EDITION, AND ALL OSHA REQUIREMENTS AS THEY APPLY TO THIS PROJECT. THE ARCHITECT, SEOR, AND THE OWNER DO NOT ACCEPT ANY RESPONSIBILITY FOR THE CONTRACTOR'S FAILURE TO COMPLY WITH THESE REQUIREMENTS.

8. ALL WORK IS NEW (N) UNLESS INDICATED AS EXISTING (E).

9. CONSTRUCTION MATERIALS SHALL BE DISTRIBUTED WHEN PLACED ON THE STRUCTURE SUCH THAT LOADS DO NOT EXCEED DESIGN LIVE LOADS OR RESULT IN AN UNBALANCED CONDITION.

10. REFER TO THE PROJECT SPECIFICATIONS FOR SHOP DRAWING REQUIREMENTS AND SUBMITTALS.

STRUCTURAL DESIGN CRITERIA:

1. CODES:
   ALL WORK SHALL BE IN CONFORMANCE WITH THE CALIFORNIA BUILDING CODE (CBC) 2019 EDITION, INCLUDING ALL AMENDMENTS. ALL STANDARDS USED SHALL BE THE LATEST VERSION APPROVED BY THE CODE ENFORCEMENT AGENCY ON THE DATE OF THE PERMIT ISSUANCE UNLESS SPECIFICALLY NOTED OTHERWISE.

2. DESIGN LIVE LOAD

	LOAD
ROOF	20 PSF

3. WIND DESIGN INFORMATION

RISK CATEGORY = II	Kz = 0.98	Kd =0.85	Kzt = 1.0
BASIC WIND SPEED Vfm = 94 MPH (3 SEC GUST)			EXPOSURE = C
INTERNAL PRESSURE COEFF. = +/- 0.18			

4. SEISMIC DESIGN INFORMATION

I = 1.0	RISK CATEGORY = II			SITE CLASS = D
S_S = 0.916	S1 = 0.329	SDS = 0.692	SD1 = 0.432	
SEISMIC DESIGN CATEGORY = D				
ANALYSIS PROCEDURE = EQUIV. LATERAL FORCE PROCEDURE				
SLRS : A7: SPECIAL REINF. MASONRY SHEAR WALLS (BLDG A, B, C)				
Rho = 1.0	R = 5	Cd = 3.5	Ω = 2.0	Cs = 0.14
SLRS : STEEL ORDINARY CANTILEVERED COLUMN (CANOPY)				
Rho = 1.0	R = 1.25	Cd = 1.25	Ω = 1.25	Cs = 0.55
STRUCTURAL IRREGULARITY: NON-PARALLEL SYSTEM IRREGULARITY (BLDG A, B, C)				

EXISTING UNDERGROUND UTILITY NOTES:

1. THE ARCHITECT AND ENGINEERS ARE NOT RESPONSIBLE FOR THE LOCATIONS OF EXISTING UNDERGROUND UTILITIES WHETHER OR NOT SHOWN ON THE DRAWINGS. THE LOCATION OF ANY EXISTING UNDERGROUND UTILITIES SHOWN ON THE DRAWINGS ARE APPROXIMATE. THE CONTRACTOR SHALL IMMEDIATELY NOTIFY THE OWNER SHOULD ANY SUCH UNIDENTIFIED CONDITIONS BE DISCOVERED.

2. THE CONTRACTOR SHALL BE RESPONSIBLE FOR ANY DAMAGES WHICH MAY RESULT FROM HIS FAILURE TO EXACTLY LOCATE AND PRESERVE ALL EXISTING UNDERGROUND UTILITIES.

CONTRACTOR RESPONSIBILITY NOTE: (DSA)

1. EACH CONTRACTOR RESPONSIBLE FOR THE CONSTRUCTION OF A MAIN LATERAL-FORCE-RESISTING SYSTEM, DESIGNATED ON PLANS SHALL SUBMIT A WRITTEN STATEMENT OF RESPONSIBILITY TO THE BUILDING DSA OFFICIAL AND THE OWNER PRIOR TO THE COMMENCEMENT OF WORK ON THE SYSTEM OR COMPONENT. THE CONTRACTOR'S STATEMENT OF RESPONSIBILITY SHALL CONTAIN THE FOLLOWING:

   A. ACKNOWLEDGMENT OF AWARENESS OF THE SPECIAL REQUIREMENTS.

   B. ACKNOWLEDGMENT THAT CONTROL WILL BE EXERCISED TO OBTAIN CONFORMANCE WITH THE CONSTRUCTION DOCUMENTS APPROVED BY THE DSA BUILDING OFFICIAL.

   C. PROCEDURES FOR EXERCISING CONTROL WITHIN THE CONTRACTOR'S ORGANIZATION, THE METHOD AND FREQUENCY OF REPORTING AND THE DISTRIBUTION OF THE REPORTS.

   D. IDENTIFICATION AND QUALIFICATIONS OF THE PERSON(S) EXERCISING SUCH CONTROL AND THEIR POSITION(S) IN THE ORGANIZATION.

FOUNDATION AND SLAB ON GRADE NOTES:

1. SEE SOIL REPORT BY: SOILS ENGINEERING, INC.
   REPORT NO.: 22-18353 DATED: 04/22/2022

   SOILS REPORT SHALL BE CONSIDER A PART OF THESE CONSTRUCTION DOCUMENTS.

2. ALLOWABLE FTG VERTICAL BEARING PRESSURE
   DEAD LOAD + LIVE LOAD = ...2500 PSF
   DEAD LOAD + LIVE LOAD + LATERAL LOAD = ...3325 PSF

   ALLOWABLE FTG LATERAL BEARING PRESSURE IS 300 PSF PER FT OF DEPTH
   ALLOWABLE FTG COEFFICIENT OF FRICTION FOR SLIDING: 0.3

3. THE CONTRACTOR SHALL CONFORM TO ALL RECOMMENDATIONS AND CONDITIONS INDICATED IN THE SOIL REPORT. THE GEOTECHNICAL ENGINEER SHALL OBSERVE ALL FOOTING EXCAVATIONS PRIOR TO PLACING CONCRETE.

4. SUBSURFACE SOIL PREPARATION:
   A. ALL EXISTING UNDOCUMENTED FILL SHALL BE REMOVED AND RECOMPACTED. ALL TOPSOILS SHALL BE REMOVED AS REQUIRED BY THE GEOTECHNICAL ENGINEER.
   B. GEOTECHNICAL ENGINEER SHALL BE RETAINED DURING THE OVEREXCAVATION PROCESS. THE ACTUAL DEPTH OF REMOVAL WILL BE DETERMINED DURING GRADING OPERATIONS.
   C. OFFSITE FILL MATERIAL SHALL BE APPROVED BY THE GEOTECHNICAL ENGINEER PRIOR TO PLACEMENT.

5. SPREAD FOOTINGS ARE CENTERED UNDER WALLS AND COLUMNS, UNO.

6. FOOTING ELEVATIONS ARE NOTED ON THE PLANS AND DETAILS . IN ANY CASE, FOOTINGS SHALL BEAR ON FIRM UNDISTURBED SOIL OR ENGINEERED FILL OR BEDROCK , IN ACCORDANCE WITH THE SOIL REPORT AND DETAILS SHOWN.

7. CONTRACTOR SHALL PROTECT ALL UTILITY LINES, ETC. ENCOUNTERED DURING EXCAVATION AND BACKFILLING.

8. FOOTING BACKFILL AND UTILITY TRENCH BACKFILL WITHIN BUILDING AREA SHALL BE MECHANICALLY COMPACTED IN LAYERS WITH THE APPROVAL OF THE GEOTECHNICAL ENGINEER. FLOODING IS NOT PERMITTED.

9. ALL TRENCHES SHALL COMPLY WITH APPLICABLE OSHA REQUIREMENTS.

10. ALL EXCAVATIONS SHALL BE PROPERLY BACKFILLED WITH NON-EXPANSIVE SOIL BUT NOT BEHIND RETAINING WALLS BEFORE CONCRETE OR MASONRY ATTAINS ITS FULL DESIGN STRENGTH.

11. THE DESIGN OF ALL SITE RETAINING WALLS INDICATED ON THESE DRAWINGS IS BASED ON DRAINED SOILS.

12. CONSTRUCTION JOINTS (CJ) AND SAWCUT (SC) JOINTS IN SLABS SHALL OCCUR WHERE LOCATED ON PLANS AND DETAILS. CJ'S SHALL HAVE FORMED POUR STOPS. CONSTRUCTION JOINTS IN WALLS AND FOOTINGS NEED NOT OCCUR AT THE SAME LOCATION, UNO.

13. SEE ARCHITECTS PLANS FOR LOCATIONS OF SLAB SLOPES, DEPRESSIONS, CURBS, DRAINS, NON-STRUCTURAL PARTITIONS AND OTHER EMBEDDED ITEMS NOT SHOWN ON THE STRUCTURAL PLANS.

14. ALL GRADING, FOUNDATION FOOTINGS, AND DRAINAGE PLANS SHALL BE REVIEWED BY THE GEOTECHNICAL ENGINEER UPON SUBMITTAL. A CERTIFIED LETTER BY THE GEOTECHNICAL ENGINEER IS REQUESTED STATING THAT THE RECOMMENDATIONS CONTAINED WITHIN THE SOILS REPORT HAVE BEEN INCORPORATED INTO THE PROJECT PLANS AND SPECIFICATIONS PRIOR TO CONSTRUCTION.

15. PRIOR TO THE CONTRACTOR REQUESTING A DSA FOUNDATION INSPECTION, THE SOILS ENGINEER SHALL ADVISE THE DSA OFFICIAL IN WRITING THAT:
   A. THE BUILDING PAD WAS PREPARED IN ACCORDANCE WITH THE SOILS REPORT.
   B. THE UTILITY TRENCHES HAVE BEEN PROPERLY BACKFILLED AND COMPACTED.
   C. THE FOUNDATION EXCAVATIONS COMPLY WITH THE INTENT OF THE SOILS REPORT.

SHORING AND EXCAVATIONS NOTES:

1. THE CONTRACTOR SHALL PROVIDE FOR THE DESIGN, APPROVALS, PERMITS, INSTALLATION AND MONITORING OF ALL TEMPORARY SHORING AND BRACING AS REQUIRED TO SUPPORT EXISTING FRAMING WHERE SUPPORT ELEMENTS (BEAMS, COLUMNS, AND BEARING WALLS) ARE TO BE REMOVED.

2. ALL WORK SHALL BE PERFORMED IN ACCORDANCE WITH THE LATEST EDITION OF THE CALIFORNIA CONSTRUCTION SAFETY ORDERS (CAL-OSHA).

3. TEMPORARY CUTS SHALL NOT EXCEED SLOPES RECOMMENDED IN THE SOIL REPORT, NOR THOSE SHOWN ON THE SHORING DRAWINGS FOR CONSTRUCTION OF FOUNDATIONS.

4. THE INSTALLATION OF SHORING AND EXCAVATIONS SHALL BE PERFORMED UNDER THE CONTINUOUS INSPECTION AND APPROVAL OF THE GEOTECHNICAL ENGINEER.

5. THE DESIGN OF THE SHORING SYSTEM SHALL BE BASED UPON RECOMMENDATIONS CONTAINED IN THE SOIL REPORT. THE SHORING CONTRACTOR SHALL FAMILIARIZE HIMSELF WITH ALL DATA THEREIN AND SHALL KEEP A COPY OF THE REPORT AT THE JOB SITE AT ALL TIMES.

6. THE STRUCTURAL ENGINEER RESPONSIBLE FOR THE SHORING DESIGN (HEREAFTER CALLED THE SHORING ENGINEER) SHALL MAKE PERIODIC VISITS TO THE JOB SITE FOR THE PURPOSE OF OBSERVING THE INSTALLATION OF THE SHORING SYSTEM. OBSERVATIONS SHALL INCLUDE, BUT SHALL NOT BE LIMITED TO, THE FOLLOWING:

   A. PRIOR TO THE START OF INSTALLATION, MEET WITH THE GEOTECHNICAL ENGINEER AND SHORING CONTRACTOR TO REVIEW ALL ASPECTS OF THE DESIGN AND INSTALLATION OF THE SHORING.
   B. REVIEW OF CONDITIONS AT COMPLETION OF EXCAVATION. THE CONTRACTOR SHALL NOTIFY THE SHORING ENGINEER AT LEAST 48 HOURS PRIOR TO EACH OF THE ABOVE REQUIRED OBSERVATIONS.

7. CONTROL POINTS SHALL BE ESTABLISHED BY A LICENSED SURVEYOR TO MONITOR ANY HORIZONTAL AND VERTICAL MOVEMENTS OF THE SHORING. INITIAL READINGS SHALL BE SUBMITTED TO THE BUILDING OFFICIAL, AND WEEKLY DATA SHALL BE SUBMITTED AS EXCAVATION PROGRESSES AND THROUGHOUT THE CONSTRUCTION PERIOD. ADDITIONAL READINGS SHALL BE OBTAINED WHEN REQUESTED BY THE BUILDING OFFICIAL, SHORING ENGINEER OR GEOTECHNICAL ENGINEER. IF ANY HORIZONTAL OR VERTICAL MOVEMENT OCCURS, THE GEOTECHNICAL ENGINEER, THE SHORING ENGINEER AND THE STRUCTURAL ENGINEER SHALL EVALUATE SUCH MOVEMENT AND RECOMMEND CORRECTIVE MEASURES, IF NECESSARY BEFORE EXCAVATION IS CONTINUED.

REINFORCING STEEL NOTES:

1. REINFORCING GRADES FOR CONCRETE OR MASONRY:

ALL BARS EXCEPT THOSE TO BE WELDED	ASTM A615, GRADE 60
TIES AND STIRRUPS	ASTM A615, GRADE 60
WELDED WIRE FABRIC	ASTM A1064
ALL BARS TO BE WELDED	ASTM A706, GRADE 60
ALL BARS IN THE CONCRETE SHEARWALL INDICATED ON WALL ELEVATION INCLUDING SUPPORTING WALL FOOTING LONGITUDINAL BARS (WF), AND ALL GRADE BEAMS (GB)	A706, GRADE 60

2. MAINTAIN MINIMUM CONCRETE COVER FROM FACE OF CONCRETE TO EDGE OF ALL REINFORCEMENT AS FOLLOWS (U.N.O.):
   (SEE PLAN/ SECTION FOR CONCRETE W/ FIRE RATING.)

CONDITION	COVER
CONCRETE POURED AGAINST EARTH	3"
CONCRETE POURED IN FORMS AND EXPOSED TO WEATHER OR EARTH	
-#6 BARS AND LARGER	2"
-#5 BARS AND SMALLER	1 1/2"
INTERIOR COLUMNS AND BEAMS	1 1/2"
INTERIOR WALL FACES AND RAISED SLABS	1"
STRUCTURAL SLABS ON GRADE	
-FROM BOTTOM OF SLAB	2"
-FROM TOP OF SLAB	1 1/2"
OTHER CONCRETE NOT EXPOSED TO WEATHER OR EARTH FOR #11 BARS AND SMALLER	1"

   PROVIDE THE LARGEST COVER REQUIRED FOR ALL APPLICABLE CONDITIONS. WHERE #3 STIRRUPS OR TIES ARE USED, ENSURE THAT THE COVER FOR LONGITUDINAL BARS IS ADEQUATE.

3. REINFORCEMENT SHALL BE PLACED IN ACCORDANCE WITH THE CONCRETE REINFORCING STEEL INSTITUTE (CRSI) "MANUAL OF STANDARD PRACTICE". EACH REINFORCING BAR SHALL BE WIRED TO A CROSS BAR AT A MAXIMUM SPACING OF 24" O.C. PROVIDE ALL ACCESSORIES NECESSARY TO SUPPORT REINFORCING IN POSITIONS SHOWN ON THE PLANS.

4. SPLICES IN CONTINUOUS REINFORCEMENT AS USED IN WALLS, FOOTINGS, SLABS, ETC., SHALL HAVE A CLASS "B" LAP (1'- 6" MIN) AND THE SPLICES IN ADJACENT BARS SHALL BE NOT LESS THAN 5' - 0" APART. VERTICAL WALL BARS SHALL BE SPLICED AT OR NEAR FLOOR LINES. BARS MAY BE WIRED TOGETHER AT SPLICES OR LAPS EXCEPT FOR TOP REINFORCING OF BEAMS AND SLABS OR WHERE SPECIFICALLY DETAILED TO BE SEPARATED. WELDED WIRE FABRIC SHALL BE LAPPED 12" MINIMUM.

5. ALL DOWELS, ANCHOR BOLTS AND OTHER HARDWARE TO BE SET IN CONCRETE SHALL BE TIED IN PLACE PRIOR TO PLACEMENT OF CONCRETE. NO WET SETTING, STABBING, RODDING OR OTHER MOVEMENT OF EMBEDDED ITEMS SHALL BE PERFORMED DURING PLACEMENT OF CONCRETE.

6. BEND REINFORCING BARS COLD.

7. STEEL SHALL BE KEPT CLEAN AND FREE OF RUST.

8. DOWELS BETWEEN FOOTING AND WALLS OR COLUMNS SHALL BE THE SAME GRADE, SIZE AND SPACING AS THE MAIN REINFORCING U.N.O.

9. ALL BARS SHALL BE MARKED SO THEIR IDENTIFICATION CAN BE MADE WHEN THE FINAL IN PLACE INSPECTION IS MADE.

10. CHAIRS OR SPACERS FOR REINFORCING SHALL BE NON-FERROUS OR PLASTIC COATED WHEN RESTING ON EXPOSED SURFACES.

MASONRY NOTES:

1. MASONRY UNITS SHALL DEVELOP THE FOLLOWING MINIMUM 28 DAY PRISM COMPRESSIVE STRENGTHS IN ACCORDANCE WITH THE BUILDING CODE:

MINIMUM 28 DAY COMPRESSIVE STRENGTH			
LOCATION	f'm	TYPE S MORTAR PER ASTM C270	GROUT PER CBC 2103A.3
ALL MASONRY U.N.O	2500 PSI	2000 PSI	2000 PSI

2. CONCRETE BLOCK SHALL CONFORM TO ASTM C90 MEDIUM WEIGHT. CLAY BRICK LOCK SHALL CONFORM TO ASTM C652

3. PRISM TEST SHALL BE PERFORMED FOR MASONRY WITH f'm OVER 2000 PSI FOR CBC 2105A.2

4. VERTICAL REINFORCING SHALL BE FULL HEIGHT OF WALL AND SHALL BE BRACED AT 6' - 8" MAXIMUM TO PREVENT MOVEMENT WHILE GROUTING.

5. HORIZONTAL REINFORCING SHALL BE IN BOND BEAM UNITS AND TIED SECURELY TO VERTICAL REINFORCING.

6. DOWELS, ANCHORS, AND OTHER EMBEDDED ITEMS SHALL BE TIED SECURELY IN PLACE TO PREVENT MOVEMENT WHILE GROUTING. WET SETTING OR STABBING IS NOT ALLOWED.

7. MAXIMUM GROUT LIFTS SHALL NOT EXCEED 8' - 0" AND CLEANOUTS AT THE BOTTOM OF ALL CELLS SHALL BE USED UNLESS THE LIFT IS 4' - 0" OR LESS. THE CLEANOUTS SHALL BE SEALED BEFORE GROUTING. GROUT FOR EACH POUR SHALL BE STOPPED 1 1/2" BELOW THE TOP OF A BLOCK COURSE EXCEPT AT THE FINAL COURSE. ALL GROUT SHALL BE THOROUGHLY CONSOLIDATED BY VIBRATING IMMEDIATELY AFTER PLACING. SHAKING OR RODDING REBAR IS NOT ALLOWED. FILL ALL CELLS WITH GROUT.

8. BLOCK SHALL BE PLACED IN RUNNING BOND AND SHALL BE 8"x8"x16" NOMINAL UNITS, UNO. WHERE BLOCK IS REQUIRED TO BE PLACED IN STACK BOND (SEE ARCH), OPEN-ENDED UNITS (I.E., "SPEED BLOCK") SHALL BE USED.

9. THE CONTRACTOR IS RESPONSIBLE FOR DETERMINING THE SAFETY OF LIFT HEIGHT FOR OPEN ENDED OR FIELD MODIFIED BLOCKS.

10. LAYOUT OF MASONRY BLOCK UNITS SHALL BE RUNNING BOND, U.N.O. BLOCK MODULES/MORTAR JOINTS SHOWN ON THESE DRAWINGS ARE FOR PRESENTATION PURPOSES ONLY, AND NOT INTENDED TO SUPERSEDE ARCHITECTURAL DESIGN REQUIREMENTS.

11. WALL REINFORCEMENT SEE PLANS & ELEVATIONS

12. PROVIDE VERTICAL CONTROL JOINTS IN CMU WALLS AS SHOWN ON PLAN. UNLESS NOTED OTHERWISE VERTICAL CONTROL JOINTS SHALL OCCUR AT 25' - 0" O.C. MAXIMUM ALONG WALL LENGTH, AT FOUNDATION STEPS, FLOOR OR ROOF JOINTS, WALL HEIGHT CHANGES, AND 24" MINIMUM PAST ONE SIDE OF OPENINGS > 6' - 0" WIDE, U.N.O. ON PLANS

13. WHEN THE AMBIENT TEMPERATURE FALLS BELOW 40°F, OR EXCEEDS 100°F, PROVISIONS OF TMS602 / ACI 530 / ASCE6. ARTICLE 1.8C OR ARTICLE 1.8D SHALL BE IMPLEMENTED.

STRUCTURAL CONCRETE NOTES:

1. CONCRETE SHALL BE MIXED, PLACED AND CURED IN ACCORDANCE WITH ACI 318, 2014 EDITION, AND PROJECT SPECIFICATIONS.

2. CONCRETE SHALL NOT BE DROPPED THROUGH REINFORCING STEEL (AS IN WALLS) SO AS TO CAUSE SEGREGATION OF AGGREGATES. IN SUCH CASES, HOPPERS AND VERTICAL CHUTES OR TRUNKS SHALL BE USED. CHUTES OR TRUNKS SHALL BE OF VARIABLE LENGTHS SO THAT FREE UNCONFINED FALL OF CONCRETE SHALL NOT EXCEED SIX FEET. A SUFFICIENT NUMBER OF CHUTES OR TRUNKS SHALL BE USED TO ENSURE THE CONCRETE IS KEPT LEVEL AT ALL TIMES.

3. CONSTRUCTION JOINTS SHALL BE CLEANED AND ROUGHENED BY REMOVING THE ENTIRE SURFACE TO EXPOSE CLEAN AGGREGATE SOLIDLY EMBEDDED IN THE MORTAR MATRIX. SLUSH WITH A COAT OF NEAT CEMENT BEFORE PLACING CONCRETE. SEE PLANS AND DETAILS FOR LOCATION AND TYPE OF CONSTRUCTION JOINT. LOCATIONS OF ADDITIONAL CONSTRUCTION JOINTS NOT SHOWN ON THESE PLANS SHALL BE SUBMITTED FOR APPROVAL BY THE EOR PRIOR TO PLACING ANY CONCRETE.

4. STRUCTURAL CONCRETE SHALL MEET THE FOLLOWING DESIGN CRITERIA:

LOCATION	MIN 28-DAY COMP STRENGTH	CONC TYPE[a]	MAX AGGR. SIZE	MAX W/C RATIO	MAX SLUMP[b]	CEMENT TYPE
FOUNDATIONS STEM WALLS, PILASTER	4000 PSI	NWC	1 1/2"	0.45	4"	II / V
SLAB ON GRADE	4000 PSI	NWC	1"	0.45	4"	II / V
ALL OTHER STRUCTURAL CONCRETE NO NOTED..	4000 PSI	NWC	1"	0.50	6"	II / V

   a. SLUMP MEASURED PRIOR TO SUPERPLASTICIZER, WHERE OCCURS.

5. CONCRETE MIX DESIGN AND TESTING SHALL MEET THE REQUIREMENTS OF THE BUILDING CODE, AND SPECIFICATIONS. ALL CONCRETE MIXES SHALL BE DESIGNED BY A RECOGNIZED TESTING LAB STAMPED AND SEALED BY A LICENSED CALIFORNIA CIVIL ENGINEER AND SUBMITTED TO THE SEOR FOR REVIEW PRIOR TO CONCRETE PLACEMENT. STRUCTURAL CONCRETE MIXES SHALL CONSIST OF 5 SACK MINIMUM U.N.O.

6. AGGREGATES IN NORMAL WEIGHT CONCRETE SHALL CONFORM TO ASTM C-33 (HARDROCK). AGGREGATES IN LIGHT WEIGHT CONCRETE SHALL CONFORM TO ASTM C-330.

7. COMPRESSIVE STRENGTH TEST REPORTS SHALL BE SUBMITTED TO THE BUILDING DEPARTMENT AND THE SEOR.

8. PORTLAND CEMENT SHALL BE AS NOTED ABOVE FOR ALL CONCRETE CONFORMING TO ASTM C150, LOW ALKALI. MILL TESTS WITH CERTIFICATES OF COMPLIANCE SHALL BE SUBMITTED.

9. FLY ASH OR OTHER POZZOLANS CONFORMING TO ASTM C618 CLASS N OR F MAY BE USED AS A PARTIAL SUBSTITUTION FOR PORTLAND CEMENT UP TO A MAXIMUM OF 15% TOTAL CEMENTITIOUS MATERIALS BY WEIGHT IF THE MIX DESIGN IS PROPORTIONED PER ACI 318, SECTION 26.4.3.

10. CONCRETE MIXING OPERATIONS, ETC. SHALL CONFORM TO ASTM C94.

11. LEAN CONCRETE, WHERE SPECIFICALLY INDICATED, SHALL CONTAIN 2 SACKS OF CEMENT PER CUBIC YARD OF CONCRETE.

12. DRYPACK OR NONSHRINK GROUT SHALL HAVE A MINIMUM 28 DAY COMPRESSIVE STRENGTH OF 2 TIMES THE SUPPORTING CONCRETE STRENGTH, AND SHALL BE OF FIVE STAR GROUT, SIKA GROUT 212, OR APPROVED EQUAL WITH VALID CODE REPORT (LARR,ICC,ESR,IAPMO ER). FOR THICK GROUT LAYERS FOLLOW MANUFACTURER'S GUIDELINES TO ATTAIN THE REQUIRED STRENGTH, WHICH MAY INCLUDE THE ADDITION OF PEA GRAVEL.

13. DO NOT USE ANY CONCRETE OR GROUT CONTAINING CHLORIDES. WATER USED IN MIX SHALL BE CLEAN AND POTABLE.

14. FOR INTERIOR SLABS-ON-GRADE AND ALL OTHER SLABS RECEIVING ADHERED FLOORING FINISHES (I.E., GLUED, ETC.), THE MAXIMUM W/C RATIO SHALL NOT EXCEED 0.45. CURE SLABS-ON-GRADE PER ACI 318 26.5.3.

15. MAINTAIN CONCRETE ABOVE 50 DEGREES FAHRENHEIT AND IN A MOIST CONDITION FOR A MINIMUM OF 7 DAYS AFTER PLACEMENT UNLESS OTHERWISE ACCEPTED BY SEOR.

16. SEE ARCHITECTURAL DRAWINGS FOR WALL OPENINGS, WALL OFFSETS, CHAMFERS, KERFS, DRIPS AND FOR EXTENT OF DEPRESSIONS, RAMPS, ETC. PROVIDE SLEEVES FOR ALL PIPES THROUGH CONCRETE WALLS AND FOOTINGS WHERE SHOWN ON THESE DRAWINGS. CORING IS NOT PERMITTED WITHOUT PRIOR APPROVAL BY THE SEOR.

17. SEE ARCHITECT'S PLANS FOR LOCATIONS OF SLAB SLOPES, DEPRESSIONS, CURBS, DRAINS, NON-STRUCTURAL PARTITIONS AND OTHER EMBEDDED ITEMS NOT SHOWN ON THE STRUCTURAL PLANS.

18. EXPOSED CORNERS OF SLABS, BEAMS, WALLS, COLUMNS, ETC. SHALL BE FORMED WITH 3/4" CHAMFER, U.N.O.

19. CONSTRUCTION JOINTS (CJ) AND SAWCUT (SC) JOINTS IN SLABS SHALL OCCUR WHERE LOCATED ON PLANS AND DETAILS. CJ'S SHALL HAVE FORMED POUR STOPS. CONSTRUCTION JOINTS IN WALLS AND FOOTINGS NEED NOT OCCUR AT THE SAME LOCATION, U.N.O.

TYPICAL ABBREVIATIONS

A.B.	ANCHOR BOLT	KLF	KIPS PER LINEAR FOOT
ABV	ABOVE	KSL	KIPS PER SQUARE FOOT
ADDT'L	ADDITIONAL	KSI	KIPS PER SQUARE INCH
ADJ	ADJACENT	L	ANGLE
A.F.F.	ABOVE FINISH FLOOR	LBS	POUND
ALT	ALTERNATE	LFRS	LATERAL FORCE RESISTING SYSTEM
ARCH	ARCHITECT(URAL)		
A.T.R.	ALL THREADED ROD	LLBB	LONG LEG BACK TO BACK
BLDG	BUILDING	LLH	LONG LEG HORIZONTAL
BLK'G	BLOCKING	LLV	LONG LEG VERTICAL
BLW	BELOW	LONG.	LONGITUDINAL
BM	BEAM	LP	LOW POINT
BN	BOUNDARY NAILING	LWC	LIGHTWEIGHT CONCRETE
B.O.	BOTTOM OF	MAX	MAXIMUM
BOT	BOTTOM	M.B.	MACHINE BOLT
BRG	BEARING	MECH	MECHANICAL
B.S.	BOTH SIDES	MFR	MANUFACTURER
BTWN	BETWEEN	MIN	MINIMUM
C	CAMBER OR C-CHANNEL	MTL	METAL
		(N)	NEW
C.I.P.	CAST IN PLACE	NOM.	NOMINAL
CJ	CONTROL/ CONSTRUCTION JOINT	NS	NEAR SIDE OR NON-SHRINK
		NTS	NOT TO SCALE
CL	CENTERLINE	NWC	NORMAL WEIGHT CONCRETE
CLR	CLEAR	OD	OUTSIDE DIAMETER
CMU	CONCRETE MASONRY UNIT	O.C.	ON CENTER
COL	COLUMN	O.F.	OUTSIDE FACE
CONC	CONCRETE	OH	OPPOSITE HAND
CONN	CONNECTION	OPM	OSHPD PRE APPROVAL OF MANUFACTURER'S
CONT	CONTINUOUS		
CP	COMPLETE PENETRATION		CERTIFICATION
CSK	COUNTERSINK	OPN'G	OPENING
CTR(D)	CENTER(ED)	PDF	POWDER DRIVEN FASTENER
DB	BAR OR BOLT DIAMETER	PENE	PENETRATION
DBL	DOUBLE	PERF	PERFORATED
DC	DEMAND CRITICAL	PJ	PANEL JOIST
DEMO	DEMOLITION	PL	PLATE
DET	DETAIL	PLC(S)	PLACE(S)
DIA	DIAMETER	PLF	POUND PER LINEAR FOOT
DIAG	DIAGONAL	PLYWD	PLYWOOD
DIM	DIMENSION	PREFAB	PREFABRICATED
DIST	DISTANCE	PSF	POUND PER SQUARE FOOT
DO	DITTO	PSI	POUND PER SQUARE INCH
DWG	DRAWING	PT	PRESSURE TREATED OR POST TENSION
(E)	EXISTING		
EA	EACH	QTY	QUNATITY
E.F.	EACH FACE	RAD, R	RADIUS
EJ	EXPANSION JOIST	REF	REFERENCE
EMBED	EMBEDMENT	REINF	REINFORCING
ELEC	ELECTRICAL	REQ'D	REQUIRED
ELEV	ELEVATION	RJ	ROOF JOIST
EN	EDGE NAILING	R.O.	ROUGH OPENING
E.O.	EDGE OF	SB	SILL BOLT
EOR	ENGINEER OF RECORD	SC	SAW CUT OR SLIP CRITICAL
EQ	EQUAL	SCHED	SCHEDULE
EQUIP	EQUIPMENT	SEOR	STRUCTURAL ENGINEER ON RECORD
E.S.	EACH SIDE/ EDGE SCREW		
E.W.	EACH WAY	SF	SPREAD FOOTING
EXP	EXPANSION	SHT'G	SHEATHING
EXT	EXTERIOR	SIM	SIMILAR
FIN	FINISH	SLRS	SEISMIC LOAD RESISTING SYSTEM
FJ	FLOOR JOIST		
FLR	FLOOR	SMS	SHEET METAL SCREW
FN	FIELD NAILING	SN	SILL NAIL
FND	FOUNDATION	S.O.G.	SLAB ON GRADE
F.O.	FACE OF	SQ	SQUARE
FS	FAR SIDE OR FIELD SCREW	SS	STAINLESS STEEL
	FINISH SURFACE	STD	STANDARD
FRM'G	FRAMING	STAGG.	STAGGERED
FT	FOOT OR FEET	SITFF	STIFFENER
FTG	FOOTING	STL	STEEL
G	GIRDER	STRUCT	STRUCTURAL
GA	GAUGE	T&B	TOP AND BOTTOM
GALV	GALVANIZED	THK	THICK
GB	GRADE

STRUCTURAL STEEL NOTES:

1. DESIGN, FABRICATION AND ERECTION OF STRUCTURAL STEEL SHALL CONFORM TO THE SPECIFICATIONS AND STANDARD OF THE AMERICAN INSTITUTE OF STEEL CONSTRUCTION (AISC), AS CONTAINED IN THE 15TH EDITION OF "AISC MANUAL OF STEEL CONSTRUCTION".

2. ALL STRUCTURAL STEEL SHALL BE ERECTED PLUMB AND TRUE TO LINE. TEMPORARY BRACING SHALL BE INSTALLED AND SHALL BE LEFT IN PLACE UNTIL OTHER MEANS IS PROVIDED TO ADEQUATELY BRACE THE STRUCTURE.

3. PROVIDE THE FOLLOWING MATERIALS FOR STRUCTURAL STEEL U.N.O.:

STRUCTURAL STEEL GRADES:		
A.	ALL WIDE FLANGE SECTIONS	ASTM A992
B.	SQUARE OR RECTANGULAR HOLLOW STRUCTURAL SECTIONS (HSS)	ASTM A500, GRADE C (F_y= 50 KSI)
C.	ROUND HOLLOW STRUCTURAL SECTION (HSS)	ASTM A500,GRADE C (F_y= 46KSI)
C.	PIPES	ASTM A53 TYPE E OR S, GRADE B (F_y=35 KSI)
E.	PLATES, ANGLES, CHANNELS & TEES	ASTM A36
F.	ALL PLATES PART OF SLRS	ASTM A572, GRADE 50
G.	MACHINE BOLTS (MB)	ASTM A307
H.	HIGH STRENGTH BOLTS (HSB)	ASTM F3125 GRADE A325 GRADE A490
I.	WELDED HEADED STUDS	ASTM A29
J.	THREADED RODS FOR ANCHOR BOLTS	ASTM F1554, GRADE 36

4. 1/8" THICK PLATES AND THICKER SHALL BE GAS CUT OR SAW CUT EXCEPT AS OTHERWISE NOTED, ALL BOLTS SHALL BE HIGH STRENGTH BOLTS. EXCEPT OTHERWISE NOTED, ALL BOLT HOLES SHALL BE STANDARD HOLES.

5. ALL CONNECTIONS NOT SHOWN SHALL CONFORM TO THE "AISC MANUAL OF STEEL CONSTRUCTION" AND SHALL BE SUBMITTED ON SHOP DRAWINGS FOR REVIEW BY SEOR PRIOR TO FABRICATION.

6. ALL WELDED HEADED STUDS, THREADED STUDS, AND DEFORMED BARS SHALL BE NELSON, OR EQUIVALENT, AND WELDED (IN ACCORDANCE WITH MANUFACTURER'S RECOMMENDATIONS BY CERTIFIED WELDERS) SO AS TO FULLY DEVELOP THE TENSILE CAPACITY OF THE CONNECTOR.

7. BOLTS WITH UPSET THREADS ARE NOT ALLOWED. USE THE APPROPRIATE NUT AND WASHER TYPE FOR THE SPECIFIED BOLT.

8. ALL STEEL FABRICATION SHALL BE PERFORMED BY A AISC OR CITY OF LOS ANGELES CERIFIED FABRICATOR.

9. ALL STRUCTURAL STEEL AND MISCELLANEOUS STEEL PERMANENTLY EXPOSED TO THE ELEMENTS SHALL BE HOT DIP GALVANIZED AFTER FABRICATION UNLESS A WEATHER PROOF COATING IS SPECIFIED BY THE ARCHITECT U.N.O. STAINLESS AND WEATHERING STEELS ARE EXCEPTED WHERE SPECIFIED.

   ALL STRUCTURAL STEEL SHALL BE SHOP PRIMED.
   EXCEPT
   1) STEEL IS EMBEDDED IN CONCRETE OR GROUTED MASONRY,
   2) STEEL IS HOT DIP GALVANIZED,
   3) STEEL IS STAINLESS STEEL,
   4) STEEL IS SCHEDULED TO RECEIVE SHOP APPLIED FINISHES.

10. SEE ARCHITECTURAL DRAWINGS FOR NAILER HOLES, WELDED STUDS OR OTHER ITEMS NOT SHOWN IN THESE DRAWINGS. WHERE STEEL IS EMBEDDED IN CONCRETE OR MASONRY, PROVIDE HOLES AS REQUIRED FOR PASSAGE OF CONTINUOUS REINFORCING BARS WHERE INDICATED ON DRAWINGS. DO NOT CUT HOLES IN STRUCTURAL STEEL WITHOUT PRIOR APPROVAL OF SEOR.

11. ALL ARCHITECTURALLY EXPOSED STRUCTURAL STEEL (AESS) SHALL COMPLY WITH AISC CODE OF STANDARD PRACTICE, SECTION 10.

12. PLACE NON-SHRINK OR DRYPACK GROUT UNDER ALL BASE PLATES AND ALLOW TO CURE BEFORE APPLYING LOADS.

13. ALL OPEN HSS ENDS SHALL BE CAPPED. MIN 1/4" STEEL CAP. PROVIDE SQUARE WELD ALL AROUND, CAP PLATE TO HSS.

14. FOR STRUCTURAL STEEL, IN ADDITION TO THE REQUIREMENTS OF SPECIFICATION SECTION A3.1c, HOT ROLLED SHAPES WITH FLANGES 1 1/2" THICK AND THICKER SHALL HAVE MINIMUM CHARPY V-NOTCH TOUGHNESS OF 20 FT-LB AT 70°F. PLATES 2" THICK AND THICKER SHALL HAVE A MINIMUM CHARPY V-NOTCH TOUGHNESS OF 20FT-LB AT 70°F.

WELDING NOTES:

1. WELDING PROCEDURES, ELECTRODES AND WELDER QUALIFICATIONS SHALL CONFORM TO THE "CODE FOR WELDING IN BUILDING CONSTRUCTION", AMERICAN WELDING SOCIETY (AWS), D1.1, D1.8 AND THE AISC "SPECIFICATIONS FOR THE DESIGN, FABRICATION AND ERECTION OF STRUCTURAL STEEL FOR BUILDINGS".

2. ALL WELDERS SHALL HAVE EVIDENCE OF PASSING THE AWS STANDARD QUALIFICATION TESTS, AND SHALL BE CERTIFIED FOR THE WORK THEY ARE PERFORMING.

3. PROJECT WELDING SHALL BE PERFORMED ONLY IN ACCORDANCE WITH WELDING PROCEDURE SPECIFICATIONS (WPS) SUBMITTED BY THE CONTRACTOR AND REVIEWED BY THE SEOR AND PROJECT WELDING INSPECTOR. THE WPS SHALL BE IN ACCORDANCE WITH AWS D1.1-D1.4 & D1.8 CURRENT EDITION.

4. ALL WELDS WITHIN MEMBERS DESIGNATED AS PART OF THE SEISMIC LOAD RESISTING SYSTEM (SLRS) SHALL CONFORM TO THE DETAILING, MATERIALS, WORKMANSHIP, TESTING, AND INSPECTION REQUIREMENTS PER AWS D1.8 AND MUST HAVE A MIN. CVN TOUGHNESS OF 20 FT-LB @ 0°F PER AISC 341 A3.4B.

5. WHERE WELDS ARE DESIGNATED AS DEMAND CRITICAL, THEY SHALL BE MADE WITH A FILLER METAL CAPABLE OF PROVIDING A MINIMUM CHARPY V-NOTCH (CVN) TOUGHNESS OF 20 FT-LB AT 0°F AND 40 FT-LB AT 70°F. SEE AISC 341-16 SECTION A3.4B FOR ADDITIONAL REQUIREMENTS.

6. WELDING OF STRUCTURAL STEEL SHALL BE PERFORMED PER AWS D1.1 & D1.8 USING E70XX ELECTRODES UNLESS OTHERWISED NOTED.

7. WELDING OF REINFORCING BARS SHALL BE PERFORMED PER AWS D1.4 USING E80XX ELECTRODES.

8. WELDING OF METAL DECK AND LIGHT GAGE STEEL SHALL BE IN ACCORDANCE WITH AWS D1.3.

9. ALL GROOVE OR BUTT WELDS SHALL BE COMPLETE PENETRATION WELDS. ALL EXPOSED BUTT WELDS SHALL BE GROUND SMOOTH.

10. ALL EXPOSED WELDS ON ARCHITECTURALLY EXPOSED STRUCTURAL STEEL (AESS) SHALL COMPLY WITH AISC CODE OF STANDARD PRACTICE, SECTION 10.

11. FIELD WELDS HAVE BEEN INDICATED WHERE THEY ARE EXPECTED TO OCCUR. THE CONTRACTOR SHALL DETERMINE THE ACTUAL FIELD WELDING NECESSARY TO COMPLETE THE PROJECT AND INCLUDE ALL ASSOCIATED COSTS WITHIN THE BASE BID.

12. ALL WELDS (SHOP AND FIELD) REQUIRE SPECIAL INSPECTION.

13. ALL FULL PENETRATION WELDS SHALL BE ULTRA-SONIC TESTED PER AWS D1.1 & AISC 341 J6.2.

MOMENT FRAME AND COMPLETE JOINT PENETRATION CONNECTION NOTES:

WELDING ELECTRODES
A. SMAW E8018*
B. FCAW E80 SERIES*

* WELD METAL SHALL BE CAPABLE OF DELIVERING A MINIMUM OF 20 FT-LBS AT -0°F AND 40FT-LBS @ 70°F AS MEASURED BY A CHARPY V-NOTCH IMPACT TEST PER AWS D1.1AND D1.8, APPENDIX III.

* BASE METAL FOR STRUCTURAL SHAPES IN SIZE GROUP 4 & 5 W/ t/f > 11/2" SHALL BE CAPABLE OF DELIVERING A MINIMUM OF 20 FT-LBS AT 70°. F AS MEASURED BY A CHARPY V-NOTCH IMPACT TEST PER A.I.S.C. MANUAL OF STEEL CONSTRUCTION, LATEST EDITION.

STRUCTURAL STEEL
1. ALL WELDING SHALL BE IN ACCORDANCE WITH THE AMERICAN WELDING SOCIETY (AWS) STRUCTURAL WELDING CODE FOR STEEL AWS D1.1-10 AND D1.8.
2. WELDING PROCEDURE SPECIFICATIONS (WPS) SHALL BE SUBMITTED TO THE ENGINEER FOR APPROVAL, PRIOR THE ENGINEER FOR APPROVAL, PRIOR TO THE BEGINNING OF WELDING OPERATIONS. THE WPS SHALL INCLUDE THE WELDING PARAMETERS RECOMMENDED BY THE ELECTRODE MANUFACTURER. SEE AWS D1.1 APPENDIX E, FORM E-1. JOINT DETAILS TO SUIT EXISTING CONDITIONS. THE WELDING ELECTRODE MANUFACTURER'S SPECIFICATIONS SHALL BE ATTACHED TO THE WPS. ALL WELDERS AND INSPECTORS SHALL BE INFORMED OF THE WPS AND SHALL RETAIN A COPY.
3. SEE AWS FOR PREQUALIFIED SMAW WPS'S.
4. SEE AWS FOR PREQUALIFIED FCAW WPS'S.
5. WELDING TO BE DONE BY WELDERS CERTIFIED BY AWS.
6. ONLY SHIELDED METAL ARC WELDING (SMAW) WITH LOW HYDROGEN ELECTRODES OR FLUX CORE ARC WELDING (FCAW), EITHER GAS SHIELDED OF SELF SHIELDED, SHALL BE USED. FOR SMAW, THE TYPICAL REQUIREMENTS SHALL BE ACCORDING TO NOTE #3 ABOVE. WELDING PROCEDURES SHALL MEET THE REQUIREMENTS OF AWS D1.1 4.6.2, OR SHALL BE QUALIFIED BY TEST. FOR FCAW, THE TYPICAL REQUIREMENTS SHALL BE ACCORDING TO NOTE #4 ABOVE. THE WELDING PROCEDURE SHALL MEET THE REQUIREMENTS OF AWS D1.1 4.14.1.6.
7. INDIVIDUAL WELDS SHALL BE CARRIED CONTINUOUSLY TO COMPLETION BEFORE THE JOINT IS ALLOWED TO COOL BELOW THE MINIMUM SPECIFIED PREHEAT AND INTERPASS TEMPERATURE.
8. AT ALL COMPLETE PENETRATION WELDS, WELD BEADS SHALL BE PEENED AFTER EACH PASS, WITH THE EXCEPTION OF THE ROOT PASS AND THE SURFACES PASSES, AS FOLLOWS: TURN SLAG GUN 90 DEG. AND MAKE A MINIMUM OF 4 PASSES WITH DULL CHISEL.
9. PREHEATING IS REQUIRED ON ALL TACK WELDS NOT INCORPORATED INTO FINAL WELDS. SEE AWS D1.1, SECTION 3.3.7.
10. FOR BEAM FLANGE REINFORCEMENT PLATES, THE ROLLING DIRECTION OF GRAIN SHALL BE INDICATED ON THE PLATE AND INSTALLED SO THAT THE GRAIN DIRECTION IS PARALLEL TO THE LONGITUDINAL AXIS OF THE MEMBER.
11. FULL TIME VISUAL INSPECTION BY AN AWS QC-1 QUALIFIED INSPECTOR IS REQUIRED FOR ALL WELDING.
12. 100% ULTRASONIC WELD TESTING BY THE INSPECTOR IS REQUIRED FOR ALL COMPLETE PENETRATION WELDS.
13. AMPEREAGE, VOLTAGE, POLARITY AND ELECTRODE STICK OUT SHALL BE VERIFIED TO BE IN COMPLIANCE WITH THE ELECTRODE MANUFACTURER'S RECOMMENDATIONS.
14. REMOVE B.U. BARS AND WELD TABS AT ALL FLANGE COMPLETE JOINT PENETRATION (CJP) WELDS AT DUCTILE MOMENT FRAME CONNECTIONS. TYPICAL UNLESS NOTED OTHERWISE.

METAL DECK NOTES (FILLED & UNFILLED):

1. MATERIAL FOR METAL DECK SHALL HAVE A MIN YIELD STRENGTH OF 50 KSI AND CONFORM TO ASTM A653-SS GRADE 33 WITH GALVANIZED G60 COATING COMPLYING WITH ASTM A525.

2. SEE TYPICAL DETAILS FOR REINFORCING OF DECK AROUND OPENINGS. CONTRACTOR SHALL COORDINATE SIZE AND LOCATIONS OF OPENINGS WITH THE VARIOUS TRADES. NO LOADS SHALL BE HUNG FROM DECK WITHOUT APPROVAL OF SEOR.

3. ROOF DECK IS DESIGNED FOR UNSHORED CONSTRUCTION, UNO. MAINTAIN 3 SPAN CONDITION WHEREVER POSSIBLE (2 SPAN MIN) EXCEPT AT STAIR LANDING AND WHERE NOTED OTHERWISE ON PLANS.

4. PROVIDE 2" MINIMUM BEARING AT ALL SUPPORTS. END LAPS OF METAL DECK SHALL BE A MINIMUM OF 2" AND SHALL OCCUR ONLY OVER SUPPORTS. DECK SHALL BE LAID OUT SO THAT A LOW FLUTE FALLS ON EACH PARALLEL SUPPORT.

5. INSTALL DECK BY WELDING. USE 3/4" DIAMETER PUDDLE WELDS OR WELDED STUDS TO SUPPORTS SPACED AS SHOWN ON CONSTRUCTION DRAWINGS. SPACING FOR TOP SEAM, SIDE SEAM, BUTTON PUNCH, OR PUNCHLOK CONNECTION SHALL BE IN ACCORDANCE WITH DRAWINGS. SEE TYPICAL METAL DECK DETAILS.

6. SUBMIT SHOP DRAWINGS FOR METAL DECK TO THE SEOR FOR REVIEW PRIOR TO FABRICATION. SHOP DRAWINGS SHALL SHOW TYPE OF DECK, LAYOUT OF DECK, THE SIZE AND LOCATION OF ANY OPENINGS OF WIDTH GREATER THAN 1'-0", AND ATTACHMENT METHOD.

7. ALTERNATES TO TYPE OF DECK AND FASTENING MAY BE USED WITH THE APPROVAL OF THE SEOR. DECK PROPERTIES SHALL BE EQUAL TO OR GREATER THAN THOSE SHOWN ON THE PLANS. ANY DECK OR METHOD OF FASTENING SHALL HAVE LATEST EVALUATION REPORT PER CURRENT CODE APPROVING THE DECK FOR THE APPLICATION.

ROUGH CARPENTRY/ WOOD NOTES:

1. ALL GRADES SPECIFIED ARE MINIMUM GRADES REQUIRED.

2. DOUGLAS FIR (DF) SHALL BE GRADED BY THE WESTERN WOOD PRODUCTS ASSOCIATION GRADING RULES, AND ASTM D245.

3. REDWOOD SHALL BE GRADED BY THE CALIFORNIA REDWOOD ASSOCIATION, REDWOOD INSPECTION SERVICE.

4. SILL PLATES SHALL BE PRESSURE-TREATED (PT) DOUGLAS FIR #1. REDWOOD IS PERMITTED WITH SEOR APPROVAL.

5. TOP PLATES, SILL PLATES, STUDS SHALL BE.....DF #1
   JOISTS, RAFTERS, PURLINS, BEAMS & POSTS SHALL BE .....DF #1 (U.N.O.)
   LOAD BEARING STUDS SHALL BE.....DF #1

6. MOISTURE CONTENT OF SAWN LUMBER SHALL NOT EXCEED 18% WHEN FRAMING STARTS OR SHEATHING IS APPLIED. ANY NONCOMPLIANT WORK SHALL BE REJECTED AND REFRAMED WITH ACCEPTABLE LUMBER.

7. TIMBERS 4" NOMINAL IN THE LEAST DIMENSION SHALL NOT CONTAIN BOXED HEART.

8. SILL PLATES SHALL BE PRESSURE-TREATED AND SHALL BE BOLTED TO CONCRETE WITH 5/8" DIAMETER ANCHOR BOLTS AT 48" O.C. MAX. U.N.O. WITH A BOLT BETWEEN 4" TO 12" FROM THE END OF EACH PIECE OF SILL (2 BOLTS MIN EACH PIECE). PIECE OF SILL SHALL BE CONSIDERED ENDED WHERE PLATE IS CUT OUT OVER ONE-THIRD OF CROSS-SECTION.

9. ANCHOR BOLTS FOR STRUCTURAL WALLS SHALL HAVE 12" EMBEDMENT (U.N.O.)
   MEASURED FROM TOP OF SLAB.

10. STUD BEARING WALLS AND PARTITIONS SHALL HAVE DOUBLE TOP PLATES LAPPED AT WALL AND PARTITION INTERSECTIONS. JOINTS IN UPPER AND LOWER MEMBERS OF DOUBLE TOP PLATES SHALL BE STAGGERED AT LEAST 4' - 0".

11. HOLES IN WOOD AND STEEL MEMBERS FOR BOLTS SHALL BE THE NOMINAL BOLT DIAMETER PLUS 1/16".

12. ALL BOLTS IN WOOD SHALL BE ASTM A307 STANDARD BOLTS, U.N.O. BOLTS AND SCREWS SHALL BE TIGHTENED AT TIME OF ERECTION AND RETIGHTENED BEFORE CLOSING IN OR AT THE COMPLETION OF THE JOB.

13. HOLES IN WOOD FOR LAG SCREW SHANK SHALL BE BORED TO THE SAME DIAMETER AND DEPTH AS THE SHANK, AND FOR THE THREADED PORTION BORED WITH A BIT NOT LARGER THAN 40% TO 70% OF THE SHANK DIAMETER.

14. LAG SCREWS AND SCREWS SHALL BE SCREWED AND NOT DRIVEN INTO PLACE. BOLT HOLES SHALL BE A MINIMUM OF 1/32" TO A MAXIMUM 1/16" LARGER THAN THE BOLT DIAMETER. HOLES SHALL BE ACCURATELY ALIGNED IN MAIN MEMBERS AND SIDE PLATES. BOLTS SHALL NOT BE FORCIBLY DRIVEN.

15. METAL FRAMING CONNECTORS SHALL BE MANUFACTURED BY SIMPSON STRONG TIE COMPANY (CURRENT CATALOG), OR "USP" WITH EQUIVALENT ICC PUBLISHED VALUES AND SHALL BE INSTALLED PER SPECIFICATIONS, NO EXCEPTIONS.

16. INSTALL WINDOWS AND DOORS IN STUD WALLS AFTER DEAD LOADS ARE APPLIED, AND PROVIDE A 1/2" SHIM SPACE AT THE HEAD CONDITION.

17. STEEL WASHERS SHALL BE PROVIDED UNDER HEADS AND NUTS OF ALL BOLTS AND LAG SCREWS WHICH BEAR ON WOOD. STANDARD CUT WASHERS MAY BE USED IN ALL CASES EXCEPT SILL PLATES AND WOOD LEDGERS AGAINST CONCRETE OR MASONRY. NOTE, WASHERS UNDER CARRIAGE BOLT HEADS SHALL BE LARGE ENOUGH TO ALLOW FOR SQUARE SHOULDERS.

18. ONLY LOAD BEARING AND/OR SHEAR WALLS ARE SHOWN
    SEE ARCHITECTURAL DRAWINGS FOR ALL OTHER PARTITIONS.

19. ELEVATIONS SHOWN ON PLANS ARE FROM FINISHED FIRST FLOOR, DATUM ELEVATION = 0' - 0".

20. ALL EXTERIOR WALLS AND INTERIOR BEARING WALLS ARE 2x6 STUDS @ 16" O.C. TYPICAL, U.N.O.

21. ALL EXTERIOR STUD WALLS SHALL BE COMPLETELY SHEATHED WITH 15/32" APA RATED SHEATHING, EXPOSURE-1 (32/16).

22. INTERIOR STRUCTURAL SHEATHED WALLS ARE SHOWN ON PLANS AND SHALL HAVE 15/32" APA RATED SHEATHING EXPOSURE-1, (32/16),TYPICAL U.N.O.

23. ALL STRUCTURAL WALL SHEATHING IS SPLICED ON 2" NOMINAL BLOCKING AT HORIZONTAL JOINTS, U.N.O.

24. STRUCTURAL ROOF SHEATHING SHALL BE AS ON PLAN AND SHALL BE APA RATED SHEATHING (32/16).
    NOTE: 1/8" GAP SHALL BE PROVIDED BETWEEN ADJACENT PANELS. PANELS WITH GRADE STAMP INDICATION "SIZED FOR SPACING" MAY BE USED TO FACILITATE THIS REQUIREMENT. SEE PLANS FOR REQUIRED BOUNDARY AND EDGE NAILING NOT LISTED BELOW. FLOOR SHEATHING SHALL BE GLUED AND NAILED PER PLAN.

    (* - SHEATHING @ EXTERIOR DECKS SHALL BE EXTERIOR RATED PLYWOOD.)

    BN = BOUNDARY NAILING
    EN = EDGE NAILING
    FN = FIELD NAILING

25. SEE PLANS FOR LOCATION OF NOMINAL 2X FLAT BLOCKING AT ROOF SHEATHING PANEL JOINTS. SEE THIS SHEET FOR PLY CLIP REQUIREMENTS AT UNBLOCKED ROOF PANEL JOINTS. T&G SHEATHING IS NOT REQUIRED WHERE JOINTS ARE BLOCKED.

26. FASTENERS, INCLUDING NAILS, NUTS AND WASHERS, IN CONTACT WITH PRESERVATIVE - TREATED WOOD SHALL BE OF HOT-DIPPED ZINC COATED GALVANIZED STEEL OR STAINLESS STEEL.

IDENTIFICATION STAMP
DIV. OF THE STATE ARCHITECT
APP: 03-122664 INC:
REVIEWED FOR
SS ☑ FLS ☑ ACS ☑
DATE: 05/12/2023

pjhm architects
LICENSED ARCHITECT
RICHARD W. PJHM
No. C15585
REN. 02/25
STATE OF CALIFORNIA
VCA ENGINEERS, INC
2151 Michelson Dr, #240
Irvine, CA 92612
Tel. 949.679.0870
Fax. 949.679.9370
Project No.: 1747
PROFESSIONAL ENGINEER
KIUN
No. 34029
Exp. 9/30/24
STATE OF CALIFORNIA
pjhm architects • Web: pjhm.com • LA Phone: 213.278.0172 • LA Office: 837 Traction Avenue, #410, Los Angeles, CA 90013 • SD Phone: 760.730.5527 • SD Office: 804 Pier View Way #103, Oceanside, CA 92054 • OC Office: 24461 Ridge Route Drive #100, Laguna Hills, CA 92653 • OC Phone: 949.496.6191

HIGHLAND HIGH SCHOOL
50M POOL & AQUATICS CENTER

KERN HIGH SCHOOL DISTRICT

GENERAL NOTES

S-0.2

4/7/2023 4:25:56 PM

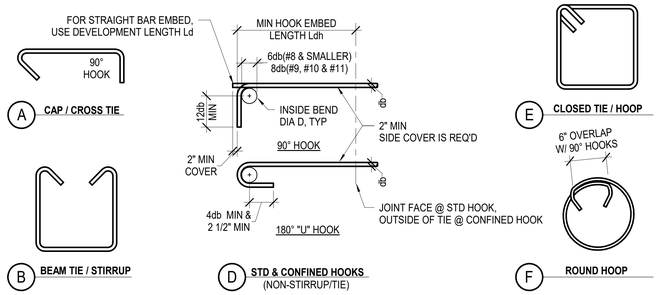

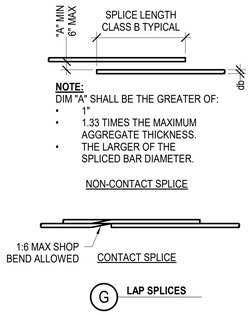

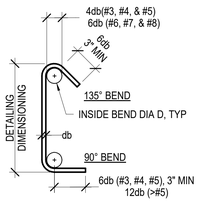

BAR SIZE	FINISHED BEND DIAMETER "D" IN INCHES
#3	2 1/4"
#4	3"
#5	3 3/4"
#6	4 1/2"
#7	5 1/4"
#8	8"
#9	9 1/2"
#10	10 3/4"
#11	12"
#14	18 1/4"
#18	24"

STANDARD HOOKS

	BAR SIZE	L_{dh}(in) STD HOOK	LAP SPLICE (in) CLASS B		L_d(in) DEVELOPMENT LENGTH	
			TOP	OTHER	TOP	OTHER
3000 PSI NWC	#3	6	29	23	22	17
	#4	8	38	29	29	22
	#5	10	47	37	36	28
	#6	12	56	43	43	33
	#7	14	82	63	63	48
	#8	16	94	72	72	55
	#9	18	106	81	81	62
	#10	20	119	91	91	70
	#11	22	132	102	101	78
4000 PSI NWC	#3	6	25	20	19	15
	#4	7	33	25	25	19
	#5	9	41	32	31	24
	#6	10	49	38	37	29
	#7	12	71	55	54	42
	#8	14	81	63	62	48
	#9	15	91	71	70	54
	#10	17	103	80	79	61
	#11	19	114	88	87	67

NOTES:
1. Ldh = HOOK DEVELOPMENT LENGTH.
2. Ld = DEVELOPMENT LENGTH.
3. db = REINFORCING BAR DIAMETER
4. SEE BUILDING CODE AND ACI 318-14 VERSION FOR ALL REQUIREMENTS NOT NOTED.
5. FOR LIGHTWEIGHT CONCRETE MULTIPLY Ldh AND Ld VALUES SHOWN BY 1.33.
6. TOP BARS ARE HORIZONTAL WITH MORE THAN 12" OF FRESH CONCRETE CAST BELOW BARS. ALL OTHER BARS ARE "OTHER" BARS.
7. STANDARD HOOK Ldh DOES NOT ACCOUNT FOR THE EFFECT OF TIES. CONFINED HOOK Ldh MAY BE USED WHERE ACI 318-14 25.4.3 APPLIES.
8. VALUES SHOWN ABOVE ARE FOR GRADE 60 (FY=60 KSI) REINFORCEMENT.
9. SPLICE LENGTHS SHOWN ARE FOR CLEAR SPACING NOT LESS THAN 2db, CONCRETE COVER NOT LESS THAN db.
10. IF EPOXY-COATED REINFORCEMENT IS USED, THE DEVELOPMENT/LAP SPLICE LENGTHS HEREIN SHALL BE MULTIPLIED BY APPLICABLE FACTORS IN ACI 318-14 SECTIONS 25.4.2.4 OR 25.4.3.2.
11. IN LIEU OF LAP SPLICES, PROVIDE TYPE 2 COUPLERS PER IAPMO ER 0129. STAGGER COUPLERS SO THAT COUPLERS DO NOT OCCUR IN ROW.

5 S-1.1 TYPICAL CONC REINFORCEMENT DETAILS AND DEVELOPMENT LENGTHS
SCALE: N.T.S.

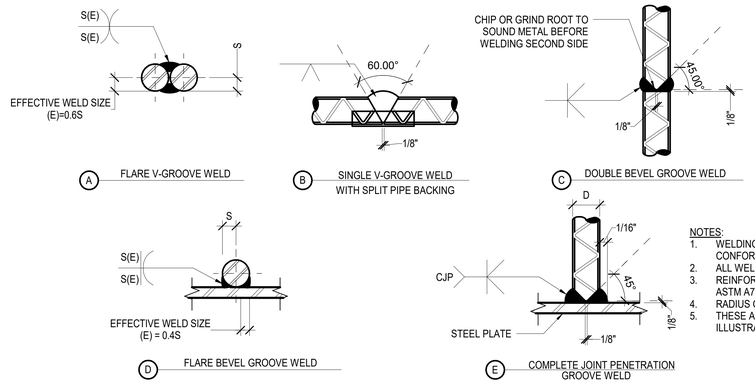

WELD SCHEDULE	
BAR SIZE	MIN WELD LENGTH
#3	3"
#4	3"
#5	3"
#6	4"
#7	5"
#8	5"
#9	6"
#10	6"

NOTES:
1. WELDING SHALL BE WITH LOW HYDROGEN ELECTRODES E90XX AND SHALL CONFORM TO AWS-D1.4.
2. ALL WELDING SHALL BE SUBJECT TO CONTINUOUS INSPECTION.
3. REINFORCING BARS TO BE WELDED SHALL MEET THE REQUIREMENT OF ASTM A706.
4. RADIUS OF REINFORCING BAR = S.
5. THESE ARE SECTIONAL VIEWS. BAR DEFORMATIONS ARE SHOWN ONLY FOR ILLUSTRATIVE PURPOSES.

3 S-1.1 TYPICAL REINFORCING BAR WELDING
SCALE: N.T.S.

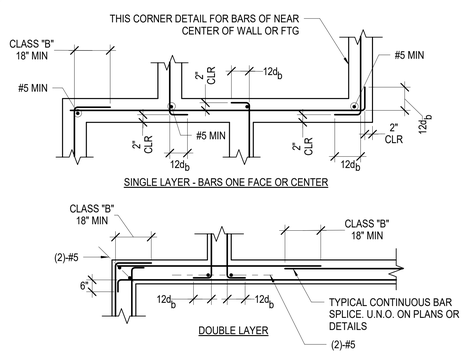

7 S-1.1 REINF BAR SPLICES AT CONT WALL FTGS INTERSECTIONS
SCALE: N.T.S.

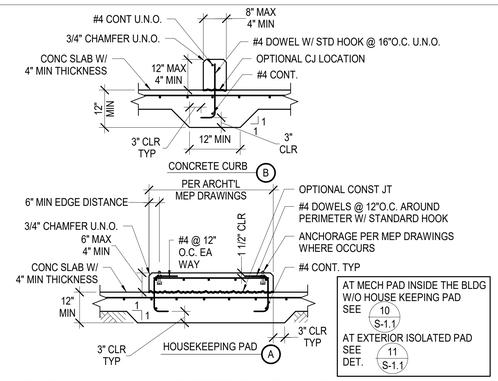

8 S-1.1 TYPICAL CONCRETE PAD AND CURB ON GRADE
SCALE: N.T.S.

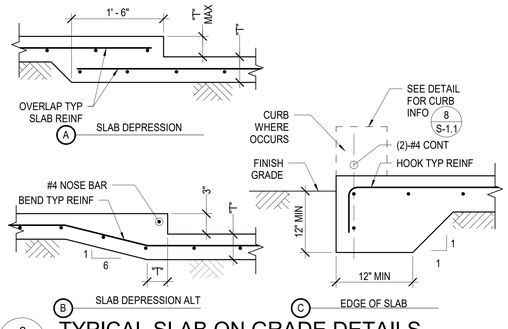

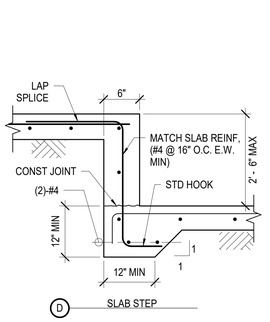

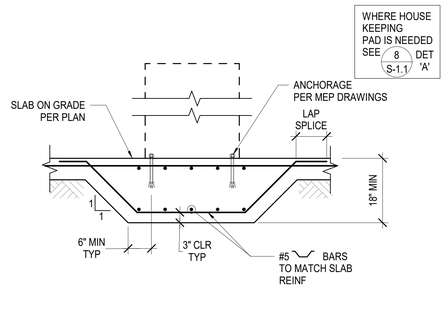

9 S-1.1 TYPICAL SLAB ON GRADE DETAILS
SCALE: N.T.S.

10 S-1.1 EQUIP PAD ON GRADE (INTERIOR)
SCALE: N.T.S.

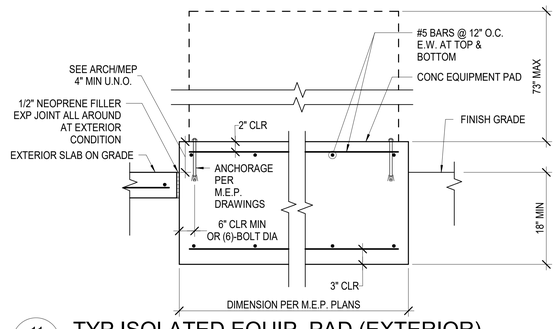

11 S-1.1 TYP ISOLATED EQUIP PAD (EXTERIOR)
SCALE: N.T.S.

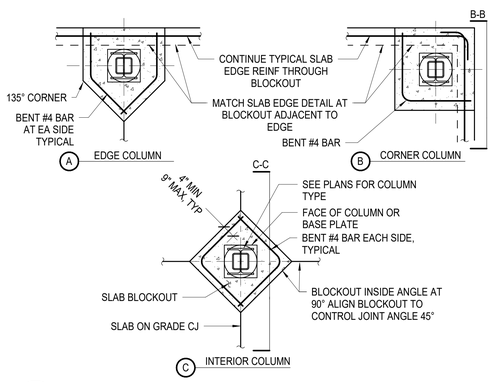

13 S-1.1 TYPICAL SLAB ON GRADE BLOCKOUT AT COLUMN
SCALE: N.T.S.

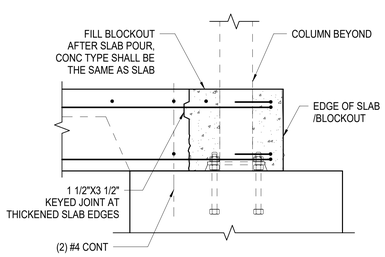

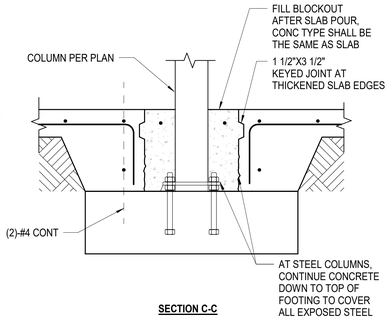

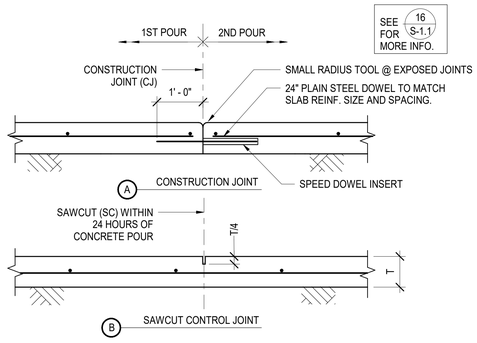

15 S-1.1 TYPICAL SLAB ON GRADE CONTROL JOINT (FOR SLAB THICKNESS 4" TO 6")
SCALE: N.T.S.

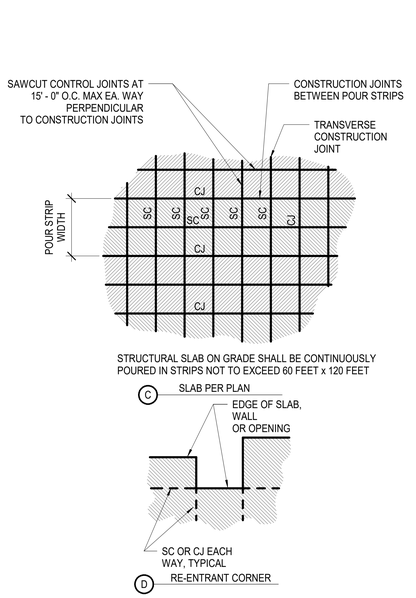

NOTES:
1. SEE ARCHITECTURAL PLANS FOR LOCATIONS OF VISUALLY EXPOSED CONTROL JOINTS.
2. FOR POURING SEQUENCE OTHER THAN THAT SHOWN ON THESE PLANS, SUBMIT SHOP DRAWINGS TO SEOR FOR REVIEW 7 DAYS PRIOR TO POUR.
3. FOR SAW CUT (SC) AND CONSTRUCTION JOINT (CJ) SEE DETAIL 15 / S-1.1
4. FOR TYPICAL SLAB EDGE AND STEPS IN SLAB SEE DETAIL 9 / S-1.1

16 S-1.1 TYP S.O.G. CONTROL JOINT
SCALE: N.T.S.

4/7/2023 4:25:59 PM

IDENTIFICATION STAMP
DIV. OF THE STATE ARCHITECT
APP: 03-122664 INC:
REVIEWED FOR
SS ☑ FLS ☑ ACS ☑
DATE: 05/12/2023

pjhm architects
LA Phone: 213.278.0172 • Web: pjhm.com
LICENSED ARCHITECT EDWARD W. FRIEND NO. C15585 REN. 02/25 STATE OF CALIFORNIA
VCA ENGINEERS, INC.
2151 Michelson Dr. #240
Irvine, CA 92612
Tel. 949.679.0870
Fax. 949.679.9370
Project No.: 1747
PROFESSIONAL ENGINEER KEUN PARK No. 34029 Exp. 9/30/24 STATE OF CALIFORNIA
LA Office: 837 Traction Avenue, #410, Los Angeles, CA 90013 • SD Phone: 760.730.5527
OC Office: 24461 Ridge Route Drive #100, Laguna Hills, CA 92653 • OC Phone: 949.496.6191 • SD Office: 804 Pier View Way #103, Oceanside, CA 92054

HIGHLAND HIGH SCHOOL
50M POOL & AQUATICS CENTER

KERN HIGH SCHOOL DISTRICT

TYPICAL DETAILS-REBAR & S.O.G

S-1.1

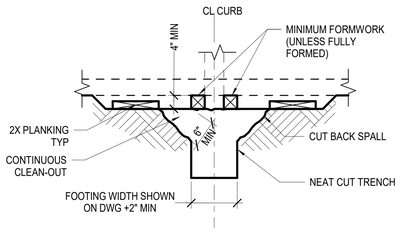

NOTES:
1. FOOTINGS POURED AGAINST EARTH ARE SUBJECT TO APPROVAL OF GEOTECH. ENGR.
2. FOOTING WIDTHS SHALL NOT BE MORE THAN 4" WIDER THAN SHOWN ON PLAN.
3. FORMWORK NOT PERMITTED BELOW GRADE UNLESS FULLY FORMED.
4. FOUNDATION CONCRETE MAY BE PLACED DIRECTLY INTO NEAT EXCAVATIONS PROVIDED THE FOUNDATION TRENCH WALLS ARE STABLE AS DETERMINED BY THE GEOTECHNICAL ENGINEER. THE MINIMUM FORMWORK SHOWN ON THE DRAWINGS IS MANDATORY TO ENSURE CLEAN EXCAVATIONS IMMEDIATELY PRIOR TO AND DURING THE PLACING OF CONCRETE.
5. CONT CLEAN-OUT STAKES NOT PERMITTED IN THE FTG AREA.
6. AFTER CONCRETE HAS SET, REMOVE LAITANCE AND SCUM.

1 S-1.2 FOOTING POURED AGAINST EARTH
SCALE: N.T.S.

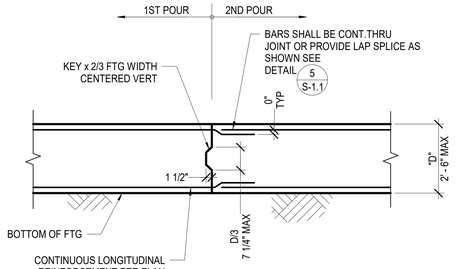

NOTES:
1. PROVIDE ADEQUATE SUPPORT FOR LONGITUDINAL REINFORCEMENT WITHIN 6" OF JOINT USING FOOTING TIES, VERTICAL DOWELS OR OTHER MEANS.
2. SECTIONS SHOWN ARE AT CENTER OF FOOTING IN LONGITUDINAL DIRECTION.

2 S-1.2 CONSTRUCTION JOINT AT FOOTING/ GRADE BEAM
SCALE: N.T.S.

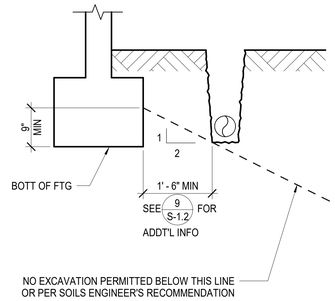

NOTE:
THE CONTRACTOR SHALL BE RESPONSIBLE FOR SHORING OR OTHERWISE MAINTAINING THE SIDES OF THE EXCAVATION FROM CAVE-INS UNTIL ALL BACKFILL IS COMPLETED PER SPECIFICATIONS AND GEOTECHNICAL REPORT.

3 S-1.2 TYPICAL EXCAVATION PARALLEL TO FOOTING
SCALE: N.T.S.

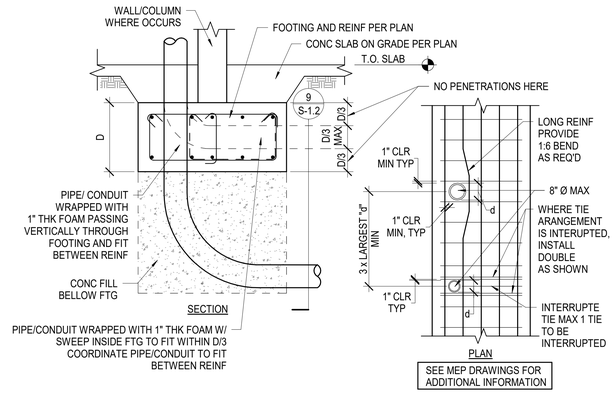

4 S-1.2 PIPE/ CONDUIT SWEEP THRU FOOTING
SCALE: N.T.S.

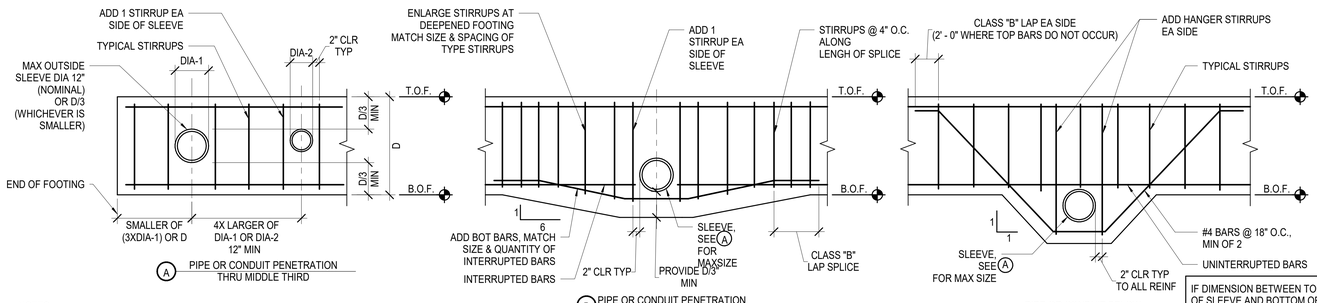

NOTES:
1. DO NOT CUT REINFORCING AT (A) OR (C) ONLY CUT INTERRUPTED REINFORCING AT (B) .
2. PROVIDE MINIMUM 2" CLEAR BETWEEN SLEEVE AND REINFORCING .
3. INSIDE Ø OF METAL SLEEVE SHALL BE 2" MIN LARGER THAN OUTSIDE Ø OF PIPE.
4. CAULK SEAL GAP AT SLEEVE-TO-PIPE/CONDUIT INTERFACE ON EXTERIOR SIDE OF FOOTING .
5. IF PIPE OR CONDUIT PENETRATION OCCURS AT EITHER TOP OR BOTTOM REBAR SPLICE LOCATION PROVIDE 2 ADDITIONAL SHEAR STIRRUPS FOR A TOTAL OF 4 SHEAR STIRRUPS ON EACH SIDE OF PENETRATION .

5 S-1.2 TYPICAL PIPE OR CONDUIT PENETRATIONS THRU CONTINUOUS FOOTINGS
SCALE: N.T.S.

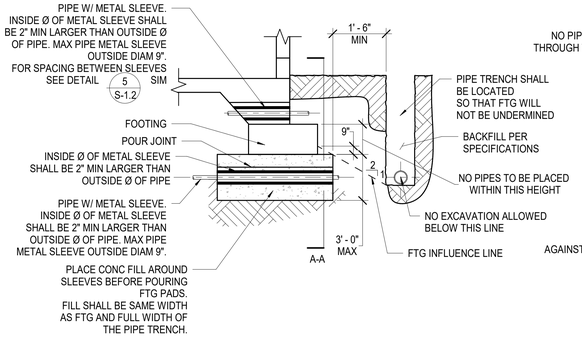

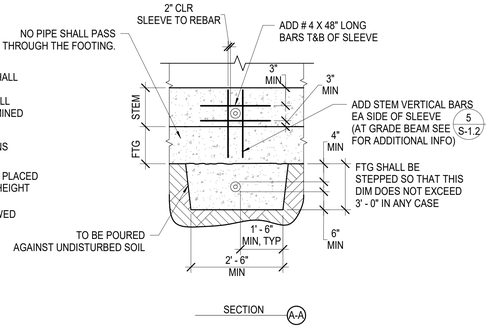

NOTES:
1. CONTRACTOR SHALL COORDINATE ALL PIPE LOCATIONS WITH BUILDING FOUNDATION REQUIREMENTS.
2. IF REQUIREMENTS AS SHOWN CANNOT BE MET, STEP FOOTING PER TYPICAL 'STEPPED FOOTING' DETAIL.
3. REFERENCE CBC SECTION 1809A.3.

9 S-1.2 PIPE TRENCH FOOTING DETAIL
SCALE: N.T.S.

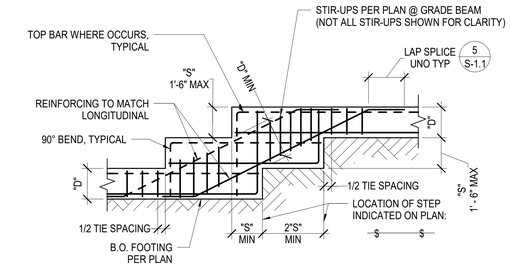

NOTES:
1. FOR FTG REINFORCING SEE PLANS AND DETAILS.
2. VERTICAL WALL DOWELS SHALL EXTEND TO BOTTOM OF FOOTING.
3. TRANSVERSE STEEL NOT SHOWN FOR CLARITY.
4. TWO STEPS ARE SHOWN, DETAIL FOR SINGLE STEP OR ADDITIONAL STEPS IS SIMILAR.

8 S-1.2 TYPICAL STEPPED FOOTING
SCALE: N.T.S.

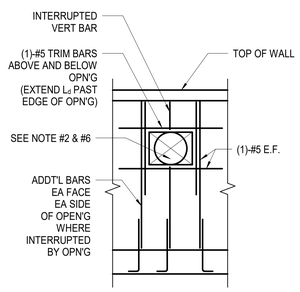

ELEVATION

NOTES:
1. FOR OPENINGS 12" OR LARGER IN WIDTH USE FULL HEIGHT JAMB BARS.
2. FOR MINOR OPENINGS THAT DO NOT INTERRUPT TYPICAL REINF, AND ARE AT LEAST 24" FROM ADJACENT OPENINGS OR WALL EDGE, NO ADDITIONAL REINF IS REQ'D UNO ON PLANS.
3. PROVIDE LAP SPLICE PER 5 / S-1.1
4. WHERE FULL EXTENSION IS NOT POSSIBLE, EXTEND BARS AS FAR AS POSSIBLE AND USE A STD HOOK.
5. EXTEND LINTEL AND SILL BARS Ld MINIMUM PAST EDGE OF OPENING.
6. WHERE VERTICAL BARS ARE INTERRUPTED BY A SMALL OR MINOR OPENING, IN ADDITION TO TRIM BARS, PLACE ADDITIONAL VERTICAL BARS EQUAL TO THE NUMBER OF INTERRUPTED BARS ON EACH SIDE OF OPENING.

11 S-1.2 TYP MINIMUM REINFORCEMENT FOR CONC WALL OPENINGS
SCALE: N.T.S.

IDENTIFICATION STAMP
DIV. OF THE STATE ARCHITECT
APP: 03-122664 INC:
REVIEWED FOR
SS ☑ FLS ☑ ACS ☑
DATE: 05/12/2023

pjhm architects
LA Phone: 213.278.0172 • Web: pjhm.com

LICENSED ARCHITECT
RICHARD W. RISING
No. C15585
REN. 02/25
STATE OF CALIFORNIA

VCA ENGINEERS, INC.
CIVIL • STRUCTURAL
2151 Michelson Dr. #240
Irvine, CA 92612
Tel. 949.679.0870
Fax. 949.679.9370
Project No.: 1747

PROFESSIONAL ENGINEER
BRENDON J. KEUN
No. 54029
Exp. 9/30/24
CIVIL
STATE OF CALIFORNIA

LA Office: 837 Traction Avenue, #410, Los Angeles, CA 90013 • SD Phone: 760.730.5527 • SD Office: 804 Pier View Way #103, Oceanside, CA 92054

OC Office: 24461 Ridge Route Drive #100, Laguna Hills, CA 92653 • OC Phone: 949.496.6191

HIGHLAND HIGH SCHOOL
50M POOL & AQUATICS CENTER

KERN HIGH SCHOOL DISTRICT

TYPICAL DETAILS- FOOTING AND EXCAVATION

S-1.2

4/7/2023 4:26:00 PM

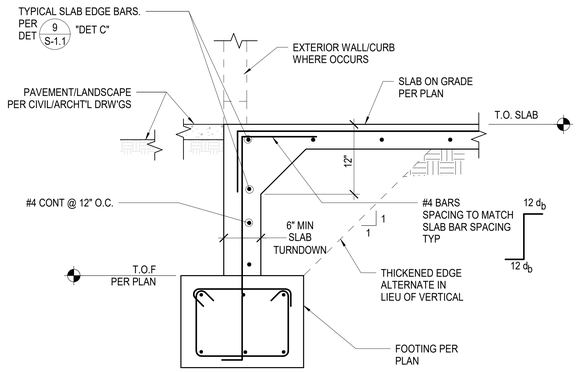

1 S-1.3 TYP SLAB TURNDOWN AT DEEPENED FOOTING

SCALE: N.T.S.

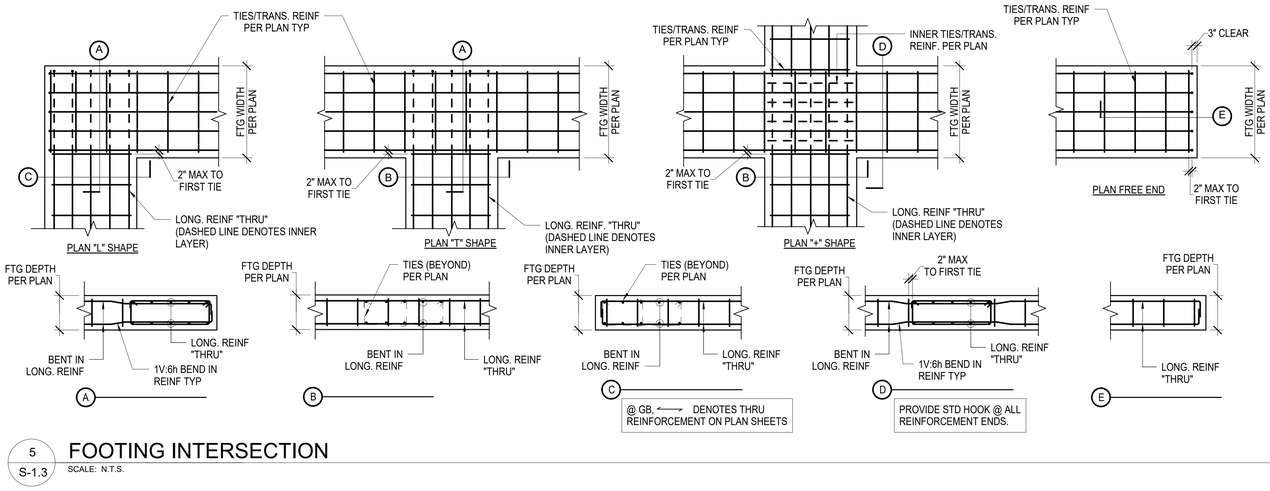

5 S-1.3 FOOTING INTERSECTION

SCALE: N.T.S.

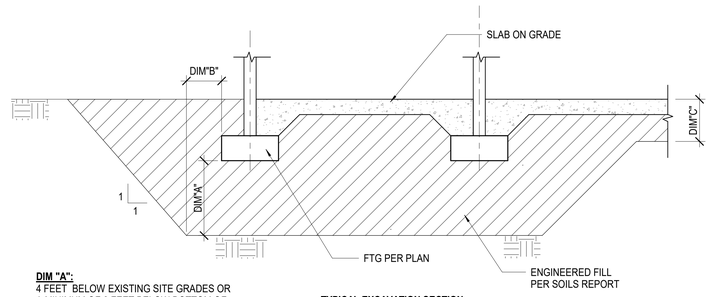

DIM "A":
4 FEET BELOW EXISTING SITE GRADES OR A MINIMUM OF 2 FEET BELOW BOTTOM OF FOOTINGS, WHICHEVER IS DEEPER.

DIM "B":
5 FEET MINIMUM BEYOND EDGE OF FOOTINGS

DIM "C":
12 INCHES MINIMUM BELOW BOTTOM OF SLAB ON GRADE.

TYPICAL EXCAVATION SECTION

NOTE:
BALANCE OF INFO SEE SOILS REPORT.

7 S-1.3 OVER EXCAVATION AT TYP FDN WHERE GRADE BEAM OCCURS

SCALE: N.T.S.

IDENTIFICATION STAMP
DIV. OF THE STATE ARCHITECT
APP: 03-122664 INC:
REVIEWED FOR
SS ☑ FLS ☑ ACS ☑
DATE: 05/12/2023

pjhm architects
LICENSED ARCHITECT RICHARD W. FRUIN REN. 02/25 STATE OF CALIFORNIA
VCA ENGINEERS, INC.
2151 Michelson Dr. #240
Irvine, CA 92612
Tel. 949.679.0870
Fax. 949.679.9370
Project No.: 1747
PROFESSIONAL ENGINEER KEUN KIM No. 54029 Exp. 9/30/24 CIVIL STATE OF CALIFORNIA
LA Office: 837 Traction Avenue, #410, Los Angeles, CA 90013 • LA Phone: 213.278.0172 • Web: pjhm.com
SD Phone: 760.730.5527 • SD Office: 804 Pier View Way #103, Oceanside, CA 92054
OC Phone: 949.496.6191 • OC Office: 24461 Ridge Route Drive #100, Laguna Hills, CA 92653

HIGHLAND HIGH SCHOOL
50M POOL & AQUATICS CENTER

KERN HIGH SCHOOL DISTRICT

TYPICAL DETAILS- FOOTING AND EXCAVATION

S-1.3

4/7/2023 4:26:01 PM

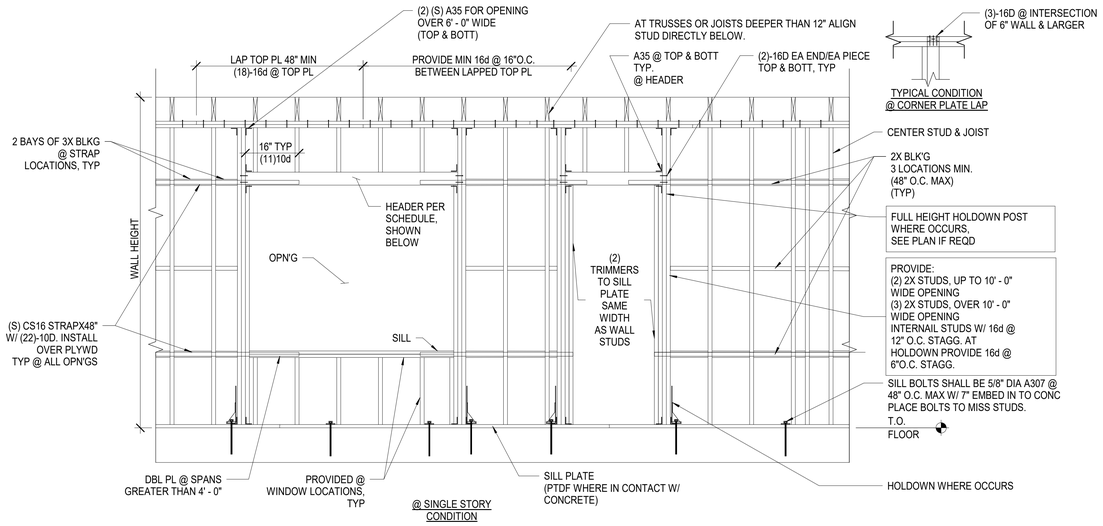

@ SINGLE STORY CONDITION

WALL STUD SCHEDULE				
EXTERIOR WALL (SPACING @ 16" O.C.) 6" WALL (U.N.O.)	INTERIOR BEARING WALL (SPACING @ 16" O.C.) 6" WALL	INTERIOR BEARING WALL (SPACING @ 16" O.C.) 4" WALL	SILL PLATE (@SHEAR WALL, SEE SHEAR WALL SCHEDULE FOR OTHER SIZE)	NON-BEARING WALL (SPACING @ 16" O.C.)
2X6	2X6	2X4	2X	2X4 MIN

HEADER NOTES:
1. SOLID HEADERS MAY BE USED W/ SAME THICKNESS & DEPTH AS BUILT UP HEADERS STATED ABOVE
2. WHERE DISCREPANCIES BETWEEN THE BEARING WALL HEADER SCHEDULE AND DRAWINGS OCCURS, DRAWINGS TAKE PRECEDENCE

BEARING WALL HEADERS		
SPAN	2X4 STUD WALL	2X6 STUD WALL
UP TO 3' - 6"	4x6	6x6
3' - 7" TO 9' - 0"	4X12	6x10
9' - 1" TO 10' - 6"	SEE PLAN	5 1/8 x 10 1/2 GLB

NON-BEARING PARTITION HEADERS		
SPAN	2X4 STUD WALL	2X6 STUD WALL
UP TO 6' - 0"	4X6	6X6
6' - 1" TO 10' - 0"	4X8	6X8
10' - 1" TO 12' - 0"	4X10	6X10

NOTE:
STUD SPACING = 16" O.C.
NAILING = SEE SHEARWALL NAILING SCHEDULE ON DETAIL

5 S-1.4 TYP WALL AND OPENING FRAMING
SCALE: N.T.S.

BOLT DIAM. AND QUANTITY ON EA SIDE OF SPLICE	REMARKS
(4)-3/4" DIA	TYPICAL

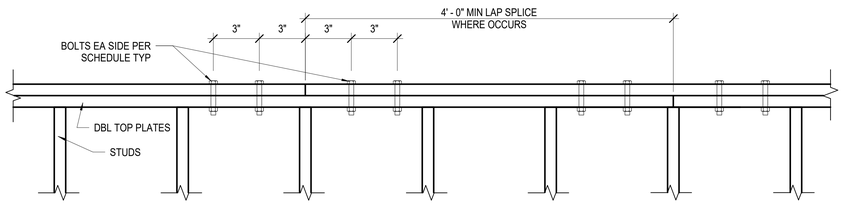

A SPLICE WITH BOLT

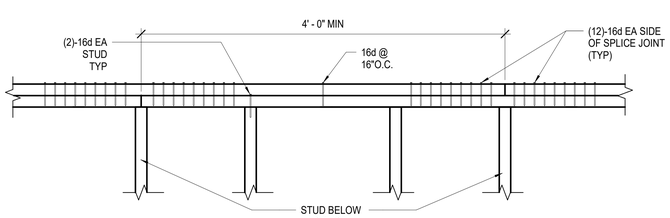

B SPLICE WITH NAILS

NOTE:
PROVIDE (3)-16d AT PLATE LAPS AT CORNERS & INTERSECTIONS.

9 S-1.4 DOUBLE PLATE SPLICE
SCALE: N.T.S.

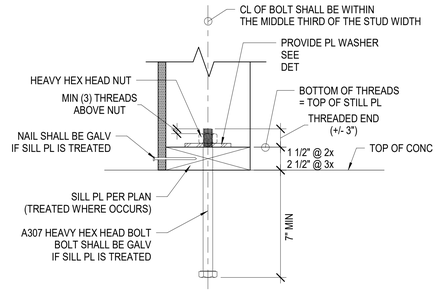

3 S-1.4 TYPICAL SILL BOLT DETAIL
SCALE: N.T.S.

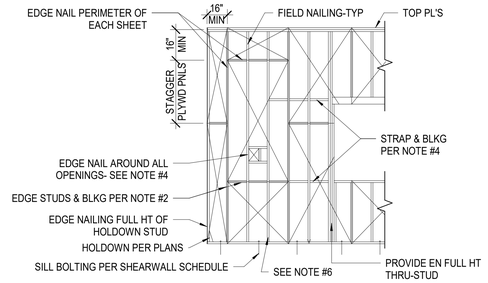

NOTES:
1. NAIL EDGE DISTANCE SHALL BE 3/8" FROM EDGE OF PLYWOOD AND EDGE OF 2x STUDS AND BLOCKING.
2. PROVIDE EDGE STUDS AND BLOCKING PER SHEARWALL SCHEDULE.
3. NAIL EDGE DISTANCE SHALL BE 5/8" FROM EDGE OF PLYWOOD AND EDGE OF 3x STUDS AND BLOCKING.
4. PROVIDE EDGE NAILING AROUND ALL OPENINGS. WHERE OPENING WIDTH EXCEEDS ONE STUD SPACE, PROVIDE CS16 COILED STRAP EACH SIDE OF OPENING WITH 10d @ 4" O.C. STRAP LENGTH SHALL EQUAL OPENING WIDTH/3 WITH STRAP CENTER AT JAMB STUD. STRAP LENGTH NEED NOT EXCEED 8' - 0" AND MAY BE OMITTED AT CORNER(END OF WALL) CONDITION. WHERE NON-CONT HEADERS OCCUR AT ADJACENT OPENINGS PROVIDE CS16 ACROSS HEADERS WITH LENGTH BASED ON LARGER OPENING (STRAP NOT REQ'D AT CONTINUOUS HEADERS).
5. ALL DEFECTIVE NAILING SHALL BE REMOVED AND REPLACED BY SOUND NAILING.
6. PROVIDE FULL HEIGHT EDGE NAILING WHERE POST OR STEEL COLUMN WITH NAILERS OCCURS WITHIN WALL.

4 S-1.4 PLYWOOD SHEARWALL DETAILS
SCALE: N.T.S.

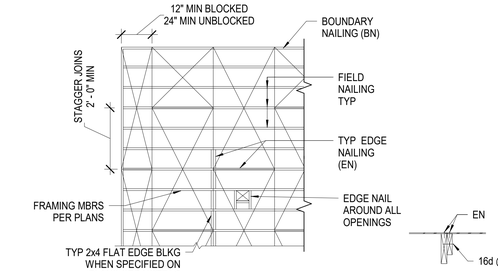

NOTES:
1. PLACE FACE GRAIN OR PLYWOOD PERPENDICULAR TO FRAMING UNLESS NOTED OTHERWISE.
2. NAIL EDGE DISTANCE SHALL BE 3/8" FROM EDGE OF PLYWOOD & 2x FRAMING MBR (3/4" @ 3x OR 4x FRAMING MBR).
3. WHERE BLKG IS SPECIFIED ON PLANS THE FOLLOWING MAY BE USED IN LIEU: 3/4"x3" WIDE PLYWOOD CLEATS W/ #10x1-1/4" FLAT HD WD SCREWS @ SAME SPACING SPECIFIED FOR EN CLEATS TO BE INSTALLED W/1/8" CLEAR EA END OF JOIST. ADD 3-8d @ 2" O.C. TO JOIST @ EA END OF CLEAT.
4. PROVIDE BOUNDARY NAILING (BN) AT DIAPHRAGM BOUNDARIES, CHORDS, STRUT TIES AND WHERE SPECIFIED.
5. WHERE JOIST LAP-SPLICE OCCURS AND PLYWOOD JOINT IS OFFSET ADD 2x4 OR 3x4 NAILER AS SHOWN:

12 S-1.4 PLYWOOD ROOF DETAILS
SCALE: N.T.S.

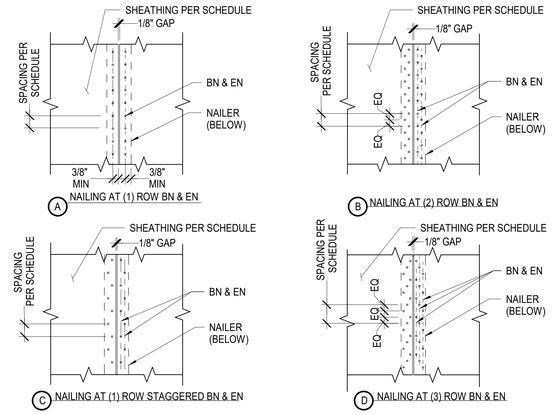

16 S-1.4 ROOF NAILING
SCALE: N.T.S.

IDENTIFICATION STAMP
DIV. OF THE STATE ARCHITECT
APP: 03-122664 INC:
REVIEWED FOR
SS ☑ FLS ☑ ACS ☑
DATE: 05/12/2023

pjhm architects

LICENSED ARCHITECT
RICHARD W. RUDOLF
No. C15585
REN. 02/25
STATE OF CALIFORNIA

VCA ENGINEERS, INC.
2151 Michelson Dr. #240
Irvine, CA 92612
Tel. 949.679.0870
Fax. 949.679.9370
Project No.: 1747

PROFESSIONAL ENGINEER
KEUN PARK
No. 54029
Exp. 9/30/24
STATE OF CALIFORNIA

pjhm.com • Web: • LA Phone: 213.278.0172 • LA Office: 837 Traction Avenue, #410, Los Angeles, CA 90013 • SD Office: 804 Pier View Way #103, Oceanside, CA 92054 • SD Phone: 760.730.5527 • OC Office: 24461 Ridge Route Drive #100, Laguna Hills, CA 92653 • OC Phone: 949.496.6191

HIGHLAND HIGH SCHOOL
50M POOL & AQUATICS CENTER

KERN HIGH SCHOOL DISTRICT

TYPICAL DETAILS - WOOD

S-1.4

4/7/2023 4:26:02 PM

MAX CEILING JOIST SPAN / VERT HANGER SPAN	JOIST SIZE AND SPACING	MAX CEILING WT
8' - 0"	2X4 @ 16" O.C. MAX	MAX 10 PSF DEAD LOAD
10' - 0"	2X6 @ 16" O.C. MAX	
12' - 0"	2X8 @ 16" O.C. MAX	

A **CEILING JOIST SCHEDULE**

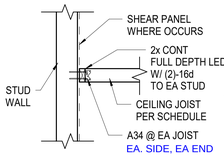

B **CEILING JOIST CONNECTION @ STUD WALL**

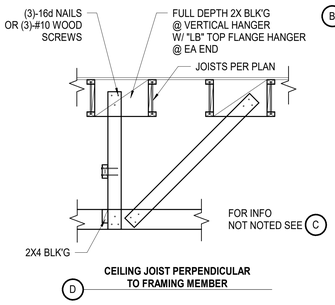

D **CEILING JOIST PERPENDICULAR TO FRAMING MEMBER**

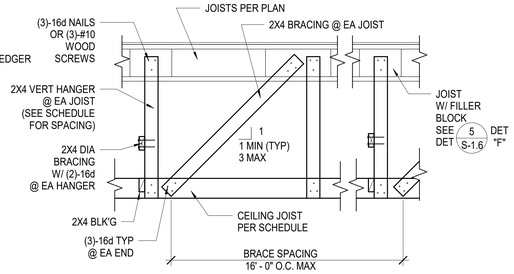

C **CEILING JOIST PARALLEL TO FRAMING MEMBER**

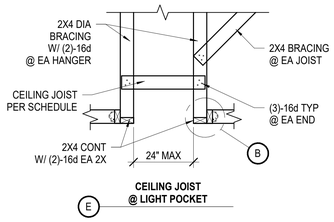

E **CEILING JOIST @ LIGHT POCKET**

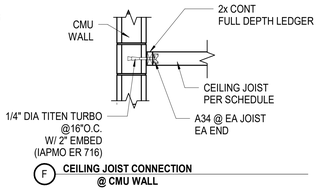

F **CEILING JOIST CONNECTION @ CMU WALL**

1 S-1.5 CEILING JOIST DETAIL

SCALE: N.T.S.

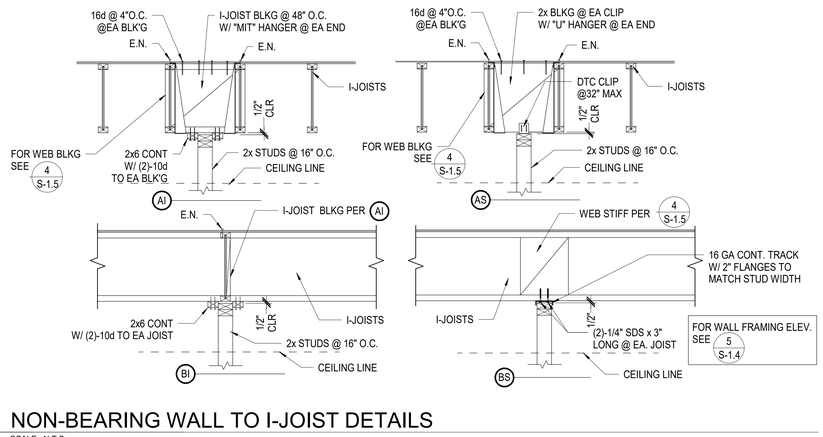

5 S-1.5 NON-BEARING WALL TO I-JOIST DETAILS

SCALE: N.T.S.

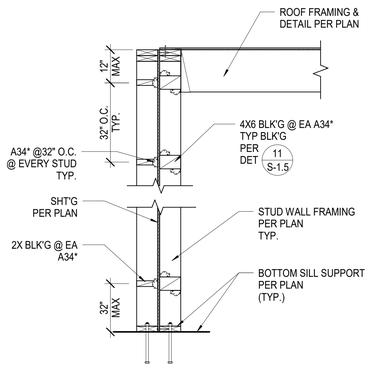

13 S-1.5 TYPICAL FURRED WALL AT EXTERIOR WALL

SCALE: N.T.S.

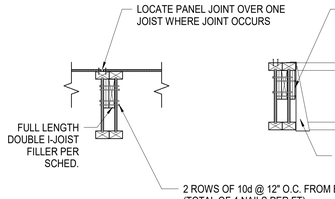

NOTE:
PLYWOOD FILEER/BACKER SHALL BEET THE REQUIREMENTS OF PS1 OR PS2.
2X FILLER/BACKER SHALL BE CONSTRUCTION GRADE OR BETTER.

FLANGE WIDTH	JOIST DEPTH	DOUBLE I-JOIST FILLER	BACKER AT TOP FLANGE HANGER
2 1/2"	11 7/8" & 16"	2X &1/2" PLY	1" PLY

3 S-1.5 DOUBLE I-JOIST DETAIL

SCALE: N.T.S.

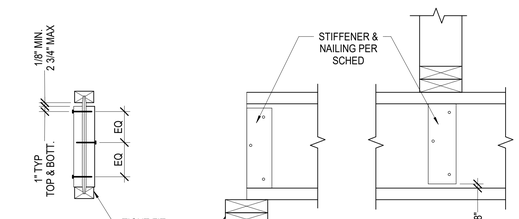

REQ'D NAILS	
11 7/8" JOIST	(5)-16d
16" JOIST	(8)-16d

FLANGE WIDTH	WEB STIFFENER SIZE
1 3/4"	5/8" X 2 5/16"
2 1/2"	1" X 2 5/16"
3 1/2"	2X4

NOTE:
PLYWOOD STIFFENER SHALL MEET THE REQUIREMENTS OF PS1 OR PS2 WITH FACE GRAIN VERTICAL.

4 S-1.5 I-JOIST STIFFENER DETAIL

SCALE: N.T.S.

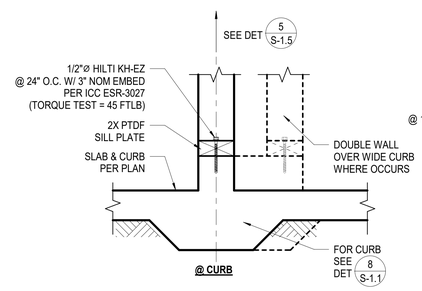

@ CURB

P.A.F. NOTE:
EMBEDMENT OF THE ANCHOR (2 7/8" SHANK LENGTH SHALL BE SUCH THAT THE WASHER BEARS FIRMLY AGAINST 2X SILL PLATE)

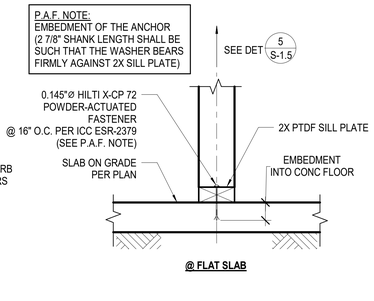

@ FLAT SLAB

7 S-1.5 BOTTOM CONNECTION @ NON-BEARINGS/NON-SHEARWALL (MAX HT = 14 FT)

SCALE: N.T.S.

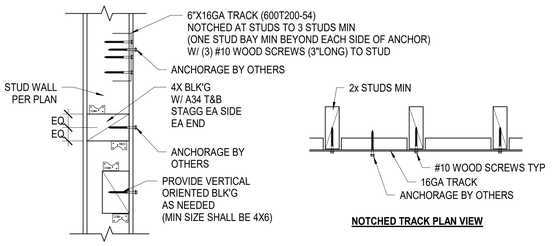

NOTCHED TRACK PLAN VIEW

11 S-1.5 TYPICAL BLOCKING/BACKING DETAIL

SCALE: N.T.S.

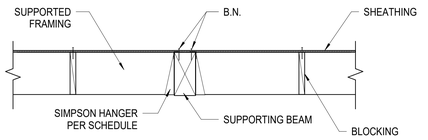

RAFTER/JOIST TO WOOD BEAM

SUPPORTED FRAMING	HGR TYPE
2x	"JB/LB"
SKEWED 2x	"BA"
MULTI 2x	"WP"
3x AND LARGER	"WP"
TJI/ MULTI TJI	"BA"
TJI W/ STIFF	"BA"
GLB	"HGLT"

12 S-1.5 HANGER SCHEDULE

SCALE: N.T.S.

4/7/2023 4:26:05 PM

IDENTIFICATION STAMP
DIV. OF THE STATE ARCHITECT
APP: 03-122664 INC:
REVIEWED FOR
SS ☑ FLS ☑ ACS ☑
DATE: 05/12/2023

pjhm architects
LA Phone: 213.278.0172 • Web: pjhm.com

LICENSED ARCHITECT
RICHARD W. RIDDLE
No. C15585
REN. 02/25
STATE OF CALIFORNIA

VCA ENGINEERS, INC.
2151 Michelson Dr. #240
Irvine, CA 92612
Tel. 949.679.0870
Fax. 949.679.9370
Project No.: 1747

PROFESSIONAL ENGINEER
KEUN
No. 54029
Exp. 9/30/24
CIVIL
STATE OF CALIFORNIA

LA Office: 837 Traction Avenue, #410, Los Angeles, CA 90013 • SD Phone: 760.730.5527 • OC Office: 24461 Ridge Route Drive #100, Laguna Hills, CA 92653 • OC Phone: 949.496.6191 • SD Office: 804 Pier View Way #103, Oceanside, CA 92054

HIGHLAND HIGH SCHOOL
50M POOL & AQUATICS CENTER

KERN HIGH SCHOOL DISTRICT

TYPICAL DETAILS - WOOD

S-1.5

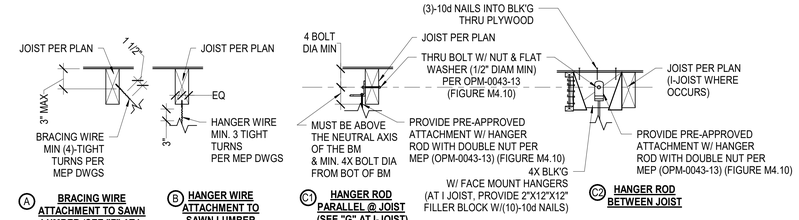

A **BRACING WIRE ATTACHMENT TO SAWN LUMBER (SEE "F" AT I-JOIST)**

B **HANGER WIRE ATTACHMENT TO SAWN LUMBER (SEE "F" AT I-JOIST)**

C1 **HANGER ROD PARALLEL @ JOIST (SEE "G" AT I-JOIST)**

C2 **HANGER ROD BETWEEN JOIST**

C3 **HANGER ROD & BRACE BETWEEN JOISTS FOR BLDG. C PIPE SUPPORT**

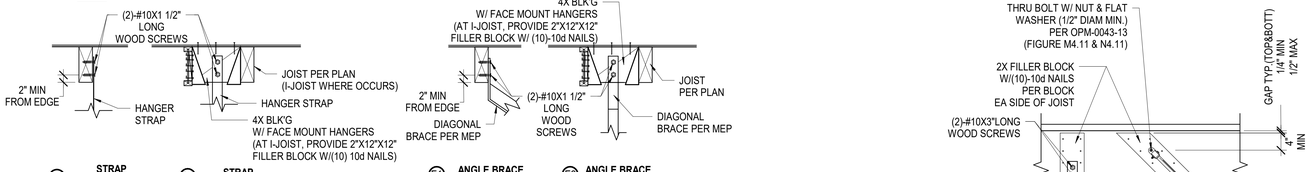

D1 **STRAP PARALLEL @ JOIST (SEE "G" AT I-JOIST)**

D2 **STRAP BETWEEN JOIST**

E1 **ANGLE BRACE PARALLEL @ JOIST (SEE "G" AT I-JOIST)**

E2 **ANGLE BRACE PERPENDICULAR @ JOIST**

G **HANGER/BRACE ROD ATTACHMENT TO JOIST**

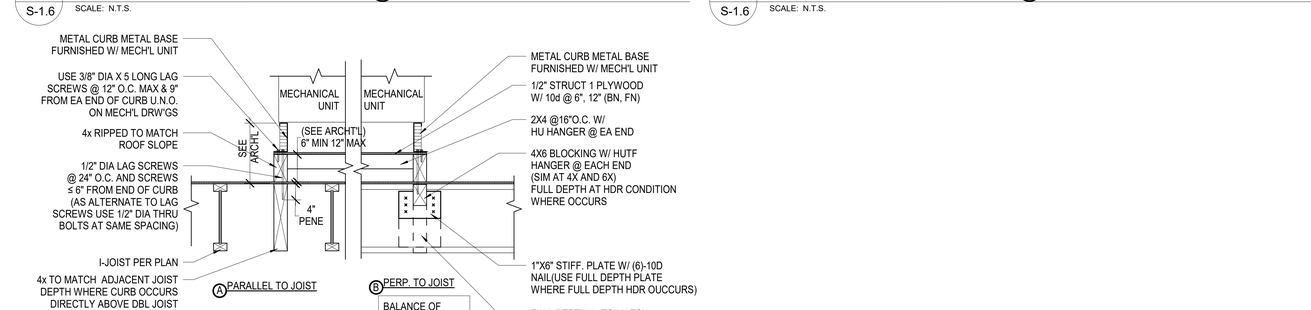

F1 **CEILING BRACING WIRE ATTACHED TO JOIST BOTTOM FLANGE**

F2 **HANGER WIRE CONNECTION TO WOOD I JOIST**

F3 **HANGER WIRE CONNECTION TO WOOD I JOIST**

H **EYEBOLT BETWEEN JOIST**

NOTE:
SPACING OF SUPPORTS FOR MINOR MEP EQUIPMENT AND OTHER EQUIPMENT SHALL BE SUCH THAT THE MAXIMUM HANGER LOAD AT JOISTS OR PURLINS IS LIMITED TO 150 POUNDS, HANGERS FOR THE EQUIPMENT LINES SHALL NOT BE LOCATED AT THE SAME MEMBER AS HANGERS FOR OTHER ITEMS. DISTRIBUTE THE HANGER LOADS FROM THE VARIOUS TRADES UNIFORMLY THROUGHOUT THE ENTIRE FRAMING SYSTEM.

5 S-1.6 HANGER ROD, BRACE & WIRE SUPPORT AT JOIST

SCALE: N.T.S.

3 S-1.6 CONDENSING UNIT PLATFORM

SCALE: N.T.S.

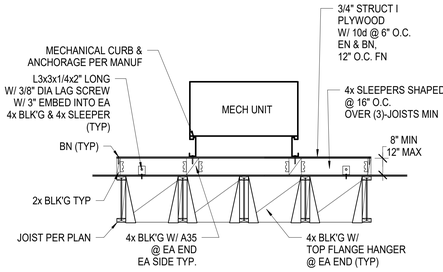

4 S-1.6 TYP FAN MOUNTING DETAIL

SCALE: N.T.S.

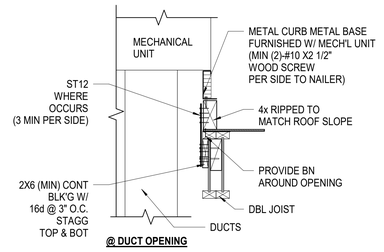

7 S-1.6 TYPICAL ROOF OPENING DETAIL

SCALE: N.T.S.

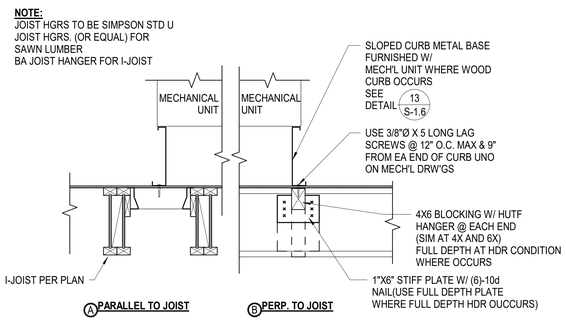

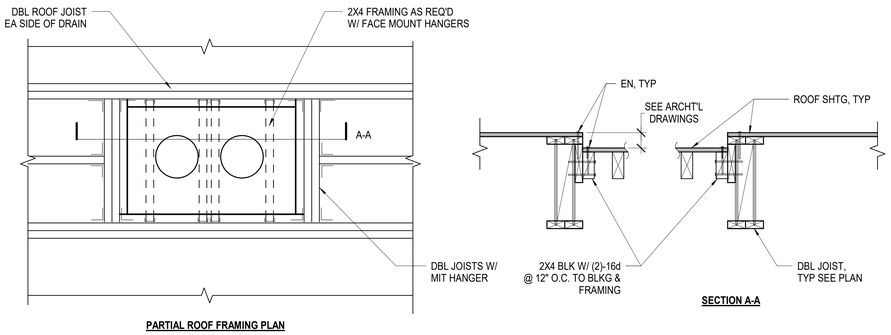

9 S-1.6 TYPICAL MECHANICAL UNIT @ ROOF

SCALE: N.T.S.

10 S-1.6 TYP MECHANICAL UNIT @ ROOF W/ SLOPPED CURB

SCALE: N.T.S.

11 S-1.6 TYPICAL ROOF DRAIN FRAMING

SCALE: N.T.S.

13 S-1.6 TYP MECHANICAL UNIT @ ROOF W/ LEVEL WOOD CURB

SCALE: N.T.S.

IDENTIFICATION STAMP
DIV. OF THE STATE ARCHITECT
APP: 03-122664 INC:
REVIEWED FOR
SS ☑ FLS ☑ ACS ☑
DATE: 05/12/2023

pjhm architects

LICENSED ARCHITECT RICHARD W. FRIDLEY NO. C15585 REN. 02/25 STATE OF CALIFORNIA

VCA ENGINEERS, INC. CIVIL • STRUCTURAL • MEP
2151 Michelson Dr. #240
Irvine, CA 92612
Tel. 949.679.0870
Fax. 949.679.9370
Project No.: 1747

PROFESSIONAL ENGINEER KEUN No. 54029 Exp. 9/30/24 STATE OF CALIFORNIA

pjhm.com • Web: • LA Phone: 213.278.0172 • LA Office: 837 Traction Avenue, #410, Los Angeles, CA 90013 • SD Phone: 760.730.5527 • SD Office: 804 Pier View Way #103, Oceanside, CA 92054 • OC Phone: 949.496.6191 • OC Office: 24461 Ridge Route Drive #100, Laguna Hills, CA 92653

HIGHLAND HIGH SCHOOL
50M POOL & AQUATICS CENTER

KERN HIGH SCHOOL DISTRICT

TYPICAL DETAILS - WOOD MEP SUPPORT

S-1.6

4/7/2023 4:26:06 PM



1 S-1.7 MTL DECK WELDING/SCREW PATTERNS

SCALE: N.T.S.

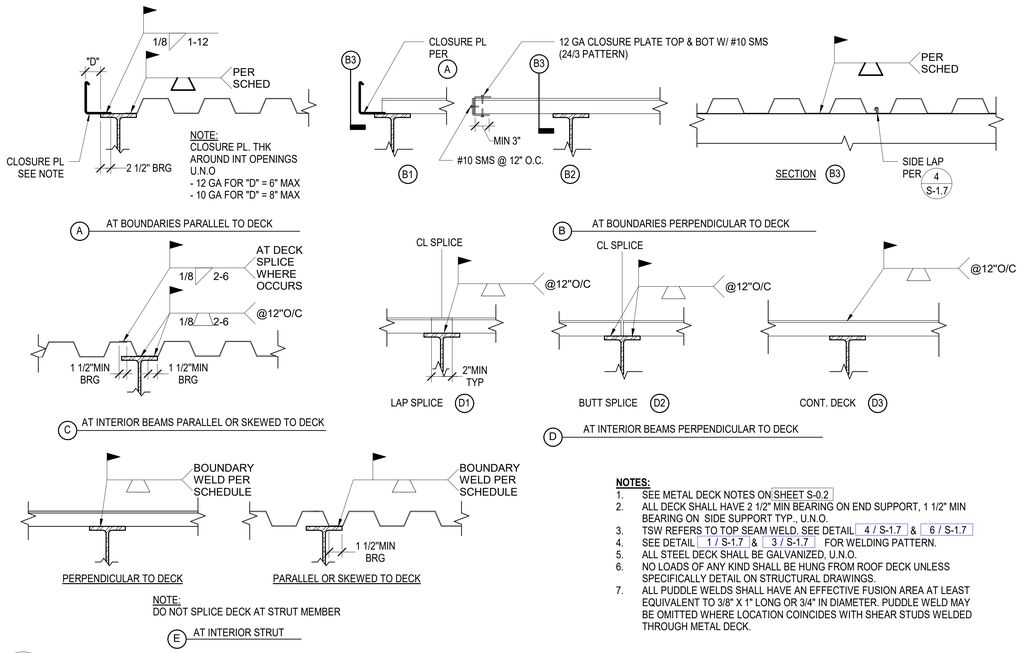

2 S-1.7 TYPICAL METAL DECK CONNECTION & PROPERTIES

SCALE: N.T.S.

NOTES:

1. SEE METAL DECK NOTES ON SHEET S-0.2
2. ALL DECK SHALL HAVE 2 1/2" MIN BEARING ON END SUPPORT, 1 1/2" MIN BEARING ON SIDE SUPPORT TYP., U.N.O.
3. TSW REFERS TO TOP SEAM WELD. SEE DETAIL 4 / S-1.7 & 6 / S-1.7
4. SEE DETAIL 1 / S-1.7 & 3 / S-1.7 FOR WELDING PATTERN.
5. ALL STEEL DECK SHALL BE GALVANIZED, U.N.O.
6. NO LOADS OF ANY KIND SHALL BE HUNG FROM ROOF DECK UNLESS SPECIFICALLY DETAIL ON STRUCTURAL DRAWINGS.
7. ALL PUDDLE WELDS SHALL HAVE AN EFFECTIVE FUSION AREA AT LEAST EQUIVALENT TO 3/8" X 1" LONG OR 3/4" IN DIAMETER. PUDDLE WELD MAY BE OMITTED WHERE LOCATION COINCIDES WITH SHEAR STUDS WELDED THROUGH METAL DECK.

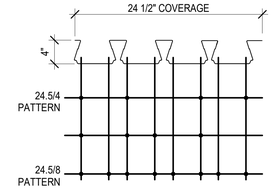

3 S-1.7 TYP DOVETAIL MTL DECK WELDING & SCREW PATTERNS

SCALE: 3/4" = 1'-0"

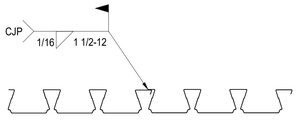

4 S-1.7 TYP DOVETAIL METAL DECK WELDING

SCALE: 3/4" = 1'-0"

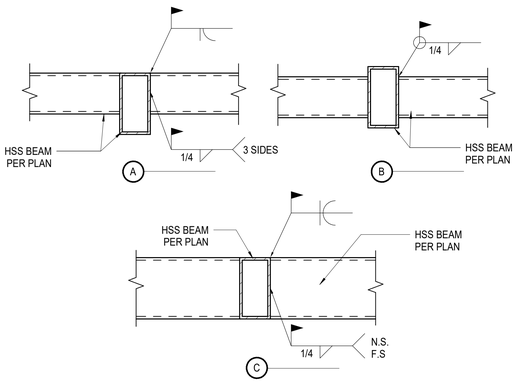

5 S-1.7 HSS BEAM TO HSS BEAM CONNECTION

SCALE: N.T.S.

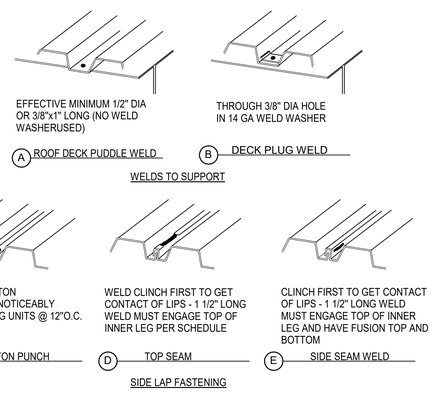

6 S-1.7 TYPICAL METAL DECK WELDING

SCALE: N.T.S.

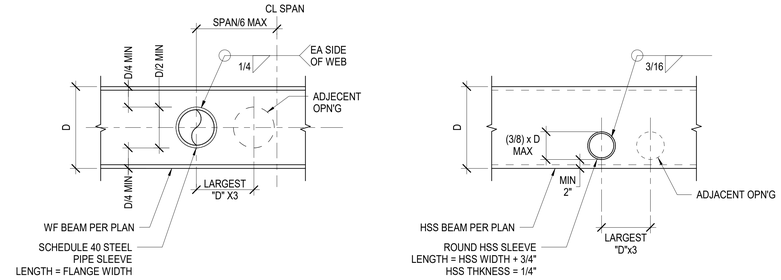

NOTES:

1. THIS DETAIL MAY NOT BE USED WITHOUT PRIOR WRITTEN APPROVAL OF SEOR & DSA.
2. CONTINUITY PLATES AND STIFFENERS SHALL BE 1/2 FLANGE WIDTH; GRADE SHALL MATCH BASE BEAM.
3. FLANGE & STIFFENER NOT REQD FOR 4" SQ HOLES & LESS IN W12 OR DEEPER.
4. WHERE ROUND OPENINGS ARE D/6 OR LESS, REINFORCING SHOWN IS NOT REQUIRED.

7 S-1.7 TYPICAL HOLE THRU STEEL BEAM WEB

SCALE: N.T.S.

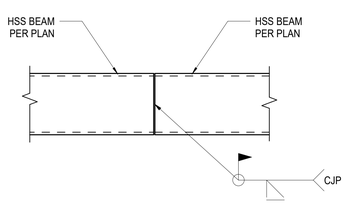

9 S-1.7 HSS BEAM SPLICE DETAIL

SCALE: N.T.S.

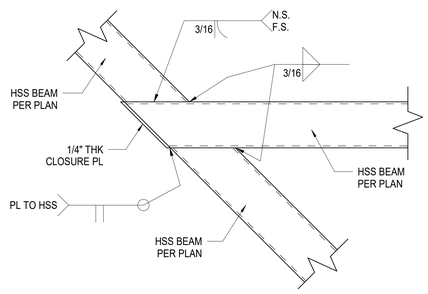

10 S-1.7 SKEWED HSS BEAM TO BEAM

SCALE: N.T.S.

4/7/2023 4:26:08 PM

IDENTIFICATION STAMP
DIV. OF THE STATE ARCHITECT
APP: 03-122664 INC:
REVIEWED FOR
SS ☑ FLS ☑ ACS ☑
DATE: 05/12/2023

pjhm architects
LA Phone: 213.278.0172 • Web: pjhm.com
LICENSED ARCHITECT RICHARD W. FRIEND NO. C15585 REN. 02/25 STATE OF CALIFORNIA
VCA ENGINEERS, INC
2151 Michelson Dr. #240
Irvine, CA 92612
Tel. 949.679.0870
Fax. 949.679.9370
Project No.: 1747
PROFESSIONAL ENGINEER KEVIN R. VOLK No. 34029 Exp. 9/30/24 STATE OF CALIFORNIA
LA Office: 837 Traction Avenue, #410, Los Angeles, CA 90013 • SD Phone: 760.730.5527
SD Office: 804 Pier View Way #103, Oceanside, CA 92054 • OC Phone: 949.496.6191
OC Office: 24461 Ridge Route Drive #100, Laguna Hills, CA 92653

HIGHLAND HIGH SCHOOL
50M POOL & AQUATICS CENTER

KERN HIGH SCHOOL DISTRICT

TYPICAL DETAILS-METAL DECK

S-1.7

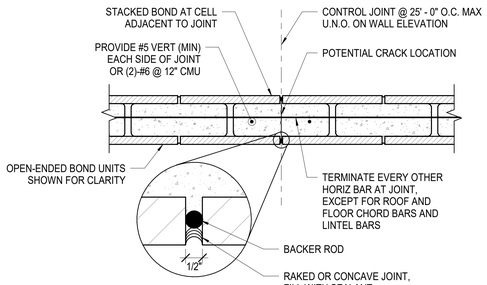

1 S-1.8 TYP CMU WALL CONTROL JOINT (C.J.)

SCALE: N.T.S.

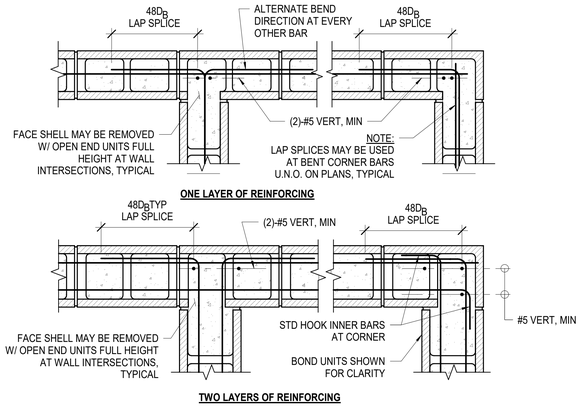

2 S-1.8 CONCRETE MASONRY WALL INTERSECTION

SCALE: N.T.S.

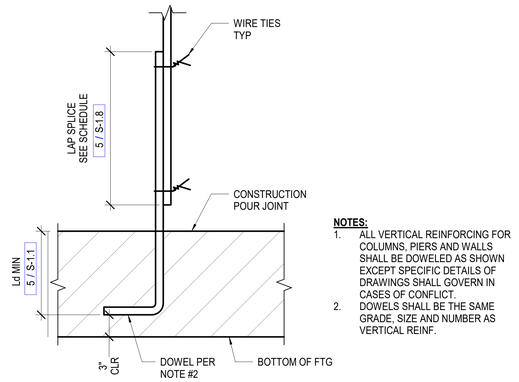

NOTES:
1. ALL VERTICAL REINFORCING FOR COLUMNS, PIERS AND WALLS SHALL BE DOWELED AS SHOWN EXCEPT SPECIFIC DETAILS OF DRAWINGS SHALL GOVERN IN CASES OF CONFLICT.
2. DOWELS SHALL BE THE SAME GRADE, SIZE AND NUMBER AS VERTICAL REINF.

3 S-1.8 TYPICAL DOWELS AT CMU WALL

SCALE: N.T.S.

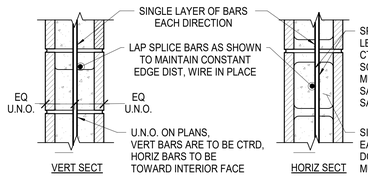

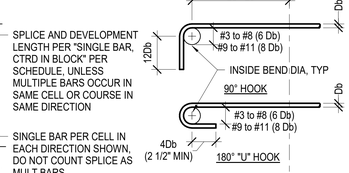

A REINFORCEMENT CENTERED IN CMU BLOCK

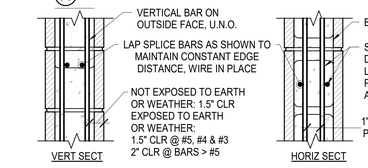

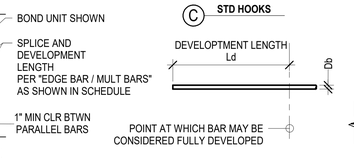

B REINFORCEMENT AT EDGE OF CMU BLOCK/MULTIPLE BARS

C STD HOOKS

D STRAIGHT DEVELOPMENT

BAR SIZE	STD HOOK Le (IN)	48 D_b (IN)	L_d (IN)	LAP SPLICE (IN) U.N.O.
#3	4	18	18	18
#4	6	24	30	30
#5	8	30	46	46
#6	9	36	64	54
#7	11	42	87	63
#8	12	48	114	72
#9	14	55	145	81

CMU WITH $f'm$=2,000 PSI (MIN)

NOTES:
1. VALUES SHOWN ARE FOR GRADE 60 REINF DEVELOPED IN CMU.
2. REFER TO TYPICAL REINFORCEMENT DETAILS FOR INFO NOT SHOWN, AND FOR DEVELOPMENT IN CONCRETE.
3. USE OF HYTEN COUPLER (OR EQ W/ ESR REPORT) IN LIEU OF LAP SPLICE @ CMU VERTICAL REINF ARE ACCEPTED. (ICC-ESR-4275)
4. WHERE NON-CONTACT SPLICES ARE USED, REINFORCEMENT SHALL NOT BE SPACED FARTHER APPART THAN ONE-FIFTH THE REQUIRED LAP SPLICE NOR MORE THAN 8 INCHES APPART.
   - L_e = HOOK LENGTH
   - L_d = DEVELOPED LENGTH
   - D_b = REINFORCING BAR DIAMETER

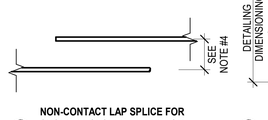

E NON-CONTACT LAP SPLICE FOR CHORD AT SLOPED DIAPHRAGM

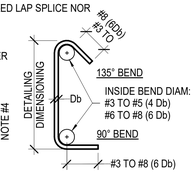

F STIRRUPS & TIES

5 S-1.8 MASONRY REINFORCEMENT DETAILS & DEVELOPMENT LENGTHS

SCALE: N.T.S.

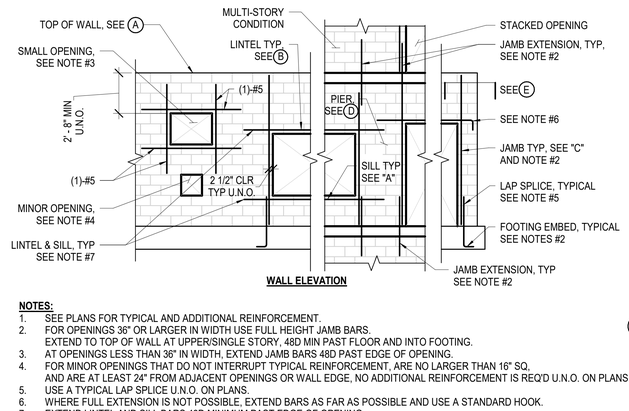

WALL ELEVATION

NOTES:
1. SEE PLANS FOR TYPICAL AND ADDITIONAL REINFORCEMENT.
2. FOR OPENINGS 36" OR LARGER IN WIDTH USE FULL HEIGHT JAMB BARS. EXTEND TO TOP OF WALL AT UPPER/SINGLE STORY. 48D MIN PAST FLOOR AND INTO FOOTING.
3. AT OPENINGS LESS THAN 36" IN WIDTH, EXTEND JAMB BARS 48D PAST EDGE OF OPENING.
4. FOR MINOR OPENINGS THAT DO NOT INTERRUPT TYPICAL REINFORCEMENT, ARE NO LARGER THAN 16" SQ, AND ARE AT LEAST 24" FROM ADJACENT OPENINGS OR WALL EDGE, NO ADDITIONAL REINFORCEMENT IS REQ'D U.N.O. ON PLANS.
5. USE A TYPICAL LAP SPLICE U.N.O. ON PLANS.
6. WHERE FULL EXTENSION IS NOT POSSIBLE, EXTEND BARS AS FAR AS POSSIBLE AND USE A STANDARD HOOK.
7. EXTEND LINTEL AND SILL BARS 48D MINIMUM PAST EDGE OF OPENING.
8. AT FULL HEIGHT JAMB BARS, THE WEB AND SHELL MAY BE REMOVED TO FACILITATE INSTALLATION. THE CONTRACTOR SHALL ENSURE THAT GROUTING WILL NOT BE COMPROMISED IF THIS OPTION IS USED.

7 S-1.8 TYPICAL MINIMUM REINFORCEMENT FOR MASONRY OPENINGS

SCALE: N.T.S.

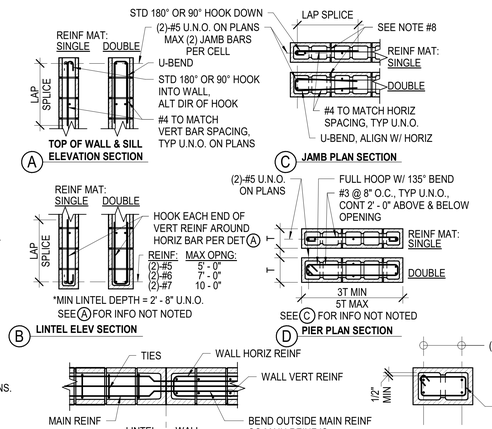

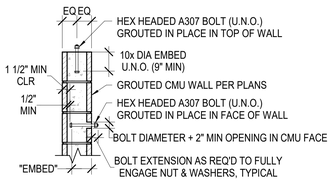

MINIMUM EMBEDMENT TABLE					
DIAMETER OF BOLTS IN INCHES	1/2	5/8	3/4	7/8	1
EMBEDMENT IN INCHES (EMBED)	4	5	6	7	8
MIN CMU WALL THICKNESS (INCHES)	6"	8"	10"	10"	12"

NOTES:
1. BOLTS CAST-IN MASONRY SHALL BE GROUTED IN PLACE WITH 1" OF GROUT BETWEEN BOLT AND MASONRY.
2. BOLTS SHALL BE A307 HEADED MACHINE BOLTS OR A36 ROD W/ TACK WELDED HEX NUT.
3. UNLESS DETAILED ON PLANS, DO NOT PLACE BOLTS IN FACE OF WALL < 12x DIA FROM OPENINGS OR EDGES WITHOUT APPROVAL FROM SEOR.

9 S-1.8 HEADED BOLT GROUTED IN CMU WALL

SCALE: N.T.S.

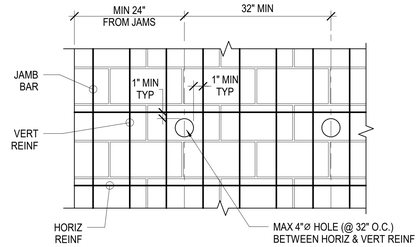

11 S-1.8 ALLOWED LOCATION OF HOLES FOR UTILITY, ETC.

SCALE: N.T.S.

IDENTIFICATION STAMP
DIV. OF THE STATE ARCHITECT
APP: 03-122664 INC:
REVIEWED FOR
SS ☑ FLS ☑ ACS ☑
DATE: 05/12/2023

pjhm architects
LA Phone: 213.278.0172 • Web: pjhm.com
LICENSED ARCHITECT RICHARD W. PRIEST NO. C15585 REN. 02/25 STATE OF CALIFORNIA
VCA ENGINEERS, INC. STRUCTURAL ENGINEERS
2151 Michelson Dr. #240
Irvine, CA 92612
Tel. 949.679.0870
Fax. 949.679.9370
Project No.: 1747
PROFESSIONAL ENGINEER KEVIN KLUN No. S4029 Exp. 9/30/24 STRUCTURAL STATE OF CALIFORNIA
LA Office: 837 Traction Avenue, #410, Los Angeles, CA 90013 • SD Phone: 760.730.5527 • Oceanside, CA 92054
OC Office: 24461 Ridge Route Drive #100, Laguna Hills, CA 92653 • OC Phone: 949.496.6191 • SD Office: 804 Pier View Way #103, Oceanside, CA

HIGHLAND HIGH SCHOOL
50M POOL & AQUATICS CENTER

KERN HIGH SCHOOL DISTRICT

TYPICAL DETAILS-CMU

S-1.8

4/7/2023 4:26:10 PM

4/7/2023 4:26:11 PM

1 S-2.0

OVERALL PLAN

SCALE: 3/32" = 1'-0"

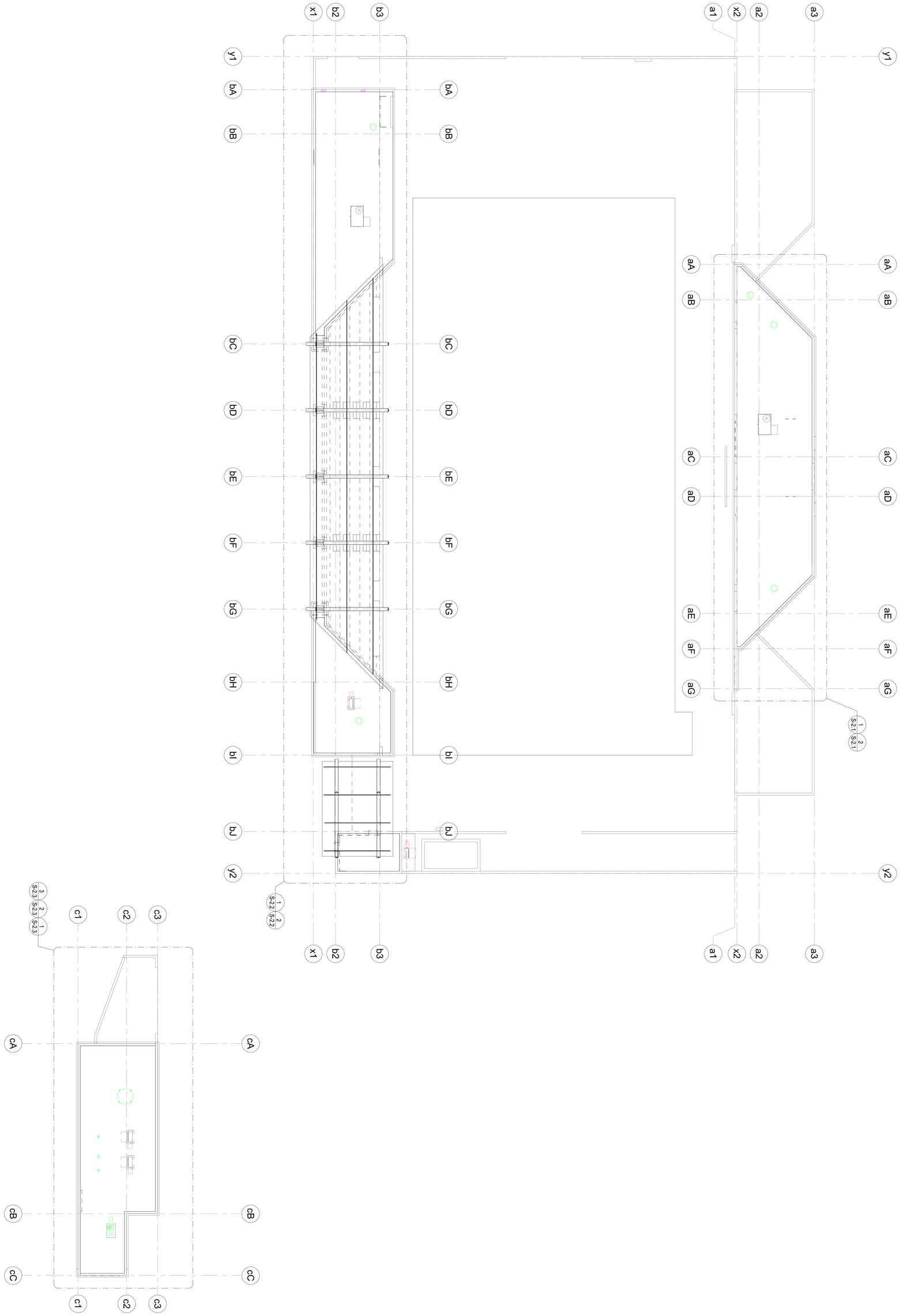

S-2.0

OVERALL PLAN

HIGHLAND HIGH SCHOOL
50M POOL & AQUATICS CENTER

KERN HIGH SCHOOL DISTRICT

VCA ENGINEERS INC
CIVIL • STRUCTURAL
2151 Michelson Dr. #240
Irvine, CA 92612
Tel. 949.679.0870
Fax. 949.679.9370
Project No.: i747

pjhm architects

IDENTIFICATION STAMP
DIV. OF THE STATE ARCHITECT
APP: 03-122664 INC:
SS ☑ REVIEWED FOR
FLS ☑ ACS ☑
DATE 05/12/2023

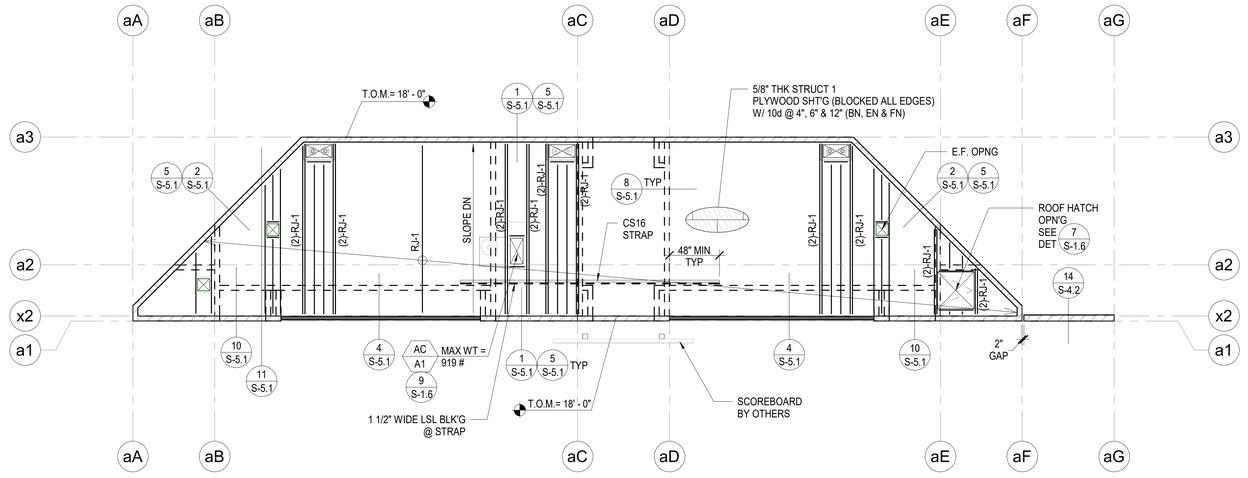

2 S-2.1 BLDG A - ROOF FRAMING PLAN

SCALE : 1/8" = 1'-0"

ROOF FRAMING NOTES:

1. FOR GENERAL NOTES, SEE S-0.0 SERIES.
2. FOR TYPICAL DETAILS, SEE S-1.0 SERIES.
3. INDICATES ROOF SHEATHING.
4. WALL LEGENDS
   - INDICATES 8" THK CMU WALL. SEE ELEVATIONS FOR ADDITIONAL INFORMATION. (MIN #5 @ 16" O.C.(VERT) & #4 @ 16"O.C.(HORIZ))
   - INDICATES 2x8 WOOD STUD WALL.
5. RJ-1 : 16" DEEP RED-I65 @ 16" O.C.

STRAP @ BLK'G

BLK'G PER PLAN

STRAP PER PLAN

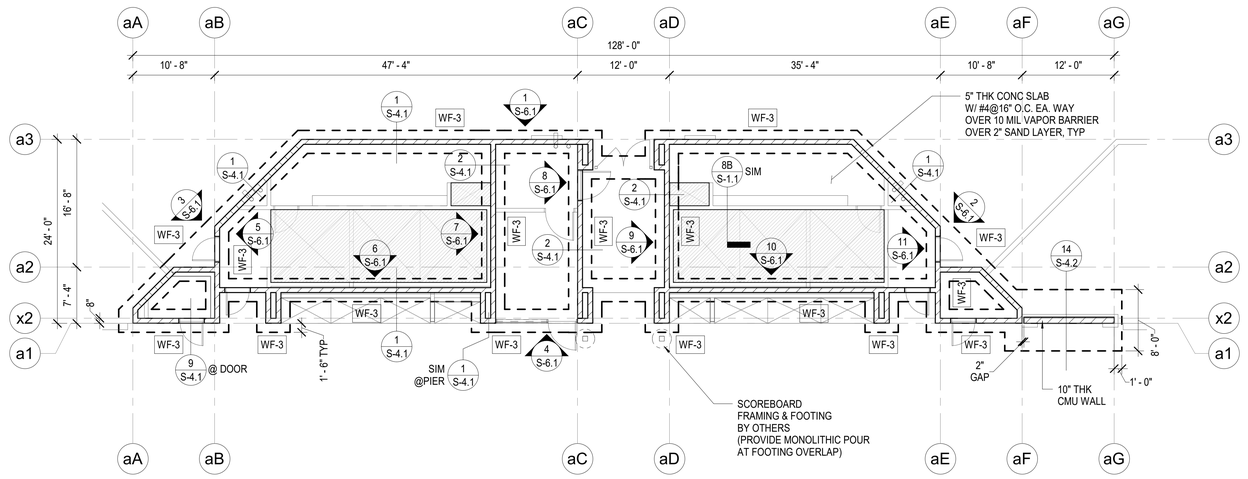

1 S-2.1 BLDG A - FOUNDATION PLAN

SCALE : 1/8" = 1'-0"

FOUNDATION NOTES:

1. FOR GENERAL NOTES, SEE S-0.0 SERIES.
2. FOR TYPICAL DETAILS, SEE S-1.0 SERIES.
3. WF-# INDICATES WALL FOOTING.

WALL FOOTING SCHEDULE					
MARK	DIMENSIONS		REINFORCEMENT		#4 TIES @ 12" O.C., U.N.O.
	WIDTH	DEPTH	TOP BARS	BOTTOM BARS	ALT CAP
WF-3	3' - 0"	24"	(3)-#6 T&B	(3)-#6 T&B	
WF-5	5' - 0"	24"	(5)-#6 T&B	(5)-#6 T&B	

4. DENOTES DEPRESSED SLAB.
5. DENOTES STEPPED FOOTING PER 8 / S-1.2
6. WALL LEGENDS
   - INDICATES 8" THK CMU WALL. SEE ELEVATIONS FOR ADDITIONAL INFORMATION. (MIN #5 @ 16" O.C.(VERT) & #4 @ 16"O.C.(HORIZ))

IDENTIFICATION STAMP
DIV. OF THE STATE ARCHITECT
APP: 03-122664 INC:
REVIEWED FOR
SS ☑ FLS ☑ ACS ☑
DATE: 05/12/2023

pjhm architects
LICENSED ARCHITECT RICHARD W. FRUIN NO. C15585 REN. 02/25 STATE OF CALIFORNIA
VCA ENGINEERS, INC. CIVIL • STRUCTURAL
2151 Michelson Dr. #240
Irvine, CA 92612
Tel. 949.679.0870
Fax. 949.679.9370
Project No.: 1747
PROFESSIONAL ENGINEER KEUN H. KIM No. 54029 Exp. 9/30/24 STATE OF CALIFORNIA
LA Phone: 213.278.0172 • Web: pjhm.com
LA Office: 837 Traction Avenue, #410, Los Angeles, CA 90013
SD Phone: 760.730.5527 • SD Office: 804 Pier View Way #103, Oceanside, CA 92054
OC Phone: 949.496.6191 • OC Office: 24461 Ridge Route Drive #100, Laguna Hills, CA 92653

HIGHLAND HIGH SCHOOL
50M POOL & AQUATICS CENTER

KERN HIGH SCHOOL DISTRICT

BLDG A - FOUNDATION & ROOF FRAMING PLAN

S-2.1

4/7/2023 4:26:14 PM

ROOF FRAMING NOTES:

1. FOR GENERAL NOTES, SEE S-0.0 SERIES.
2. FOR TYPICAL DETAILS, SEE S-1.0 SERIES.
3. INDICATES ROOF SHEATHING.
4. WALL LEGENDS
   - INDICATES 8" THK CMU WALL SEE ELEVATIONS FOR ADDITIONAL INFORMATION. (MIN #5 @ 16" O.C.(VERT) & #4 @ 16"O.C.(HORIZ))
   - INDICATES 2x8 WOOD STUD WALL.
5. RJ-1 : 16" DEEP RED-I65 @ 16" O.C.
   RJ-2 : 11 7/8" DEEP RED-I65 @ 16" O.C.

STRAP @ BLK'G

BLK'G PER PLAN

STRAP PER PLAN

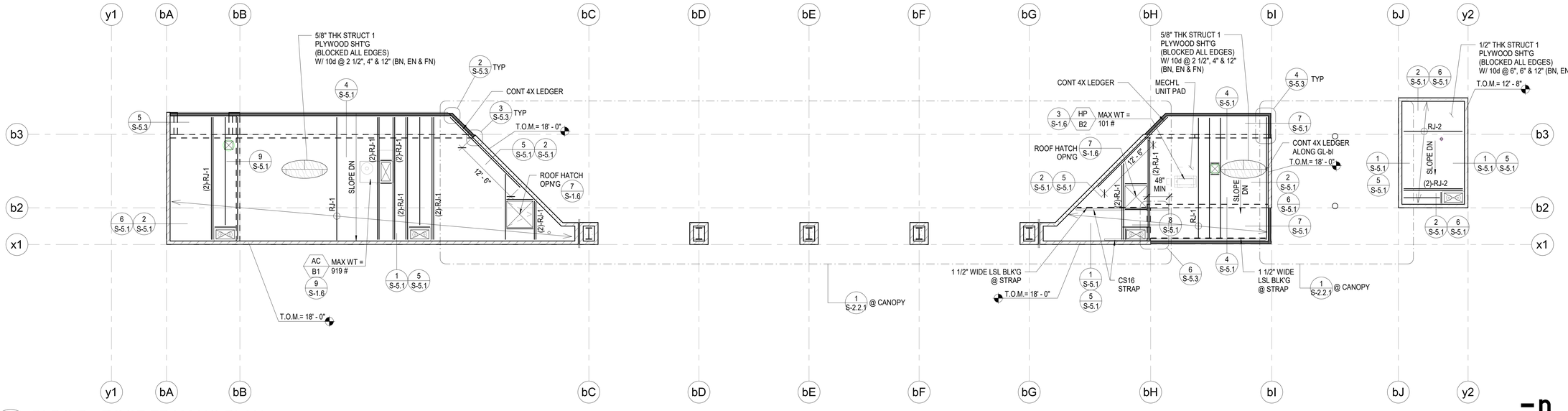

2 S-2.2 BLDG B - ROOF FRAMING PLAN

SCALE : 1/8" = 1'-0"

FOUNDATION NOTES:

1. FOR GENERAL NOTES, SEE S-0.0 SERIES.
2. FOR TYPICAL DETAILS, SEE S-1.0 SERIES.
3. WF-# INDICATES WALL FOOTING.

MARK	DIMENSIONS		REINFORCEMENT		#4 TIES @ 12" O.C., U.N.O.
	WIDTH	DEPTH	TOP BARS	BOTTOM BARS	ALT CAP
WF-3	3' - 0"	24"	(3)-#6 T&B	(3)-#6 T&B	
WF-5	5' - 0"	24"	(5)-#6 T&B	(5)-#6 T&B	

4. DENOTES DEPRESSED SLAB.
5. DENOTES STEPPED FOOTING PER 8 / S-1.2
6. WALL LEGENDS
   - INDICATES 8" THK CMU WALL. SEE ELEVATIONS FOR ADDITIONAL INFORMATION. (MIN #5 @ 16" O.C.(VERT) & #4 @ 16"O.C.(HORIZ))

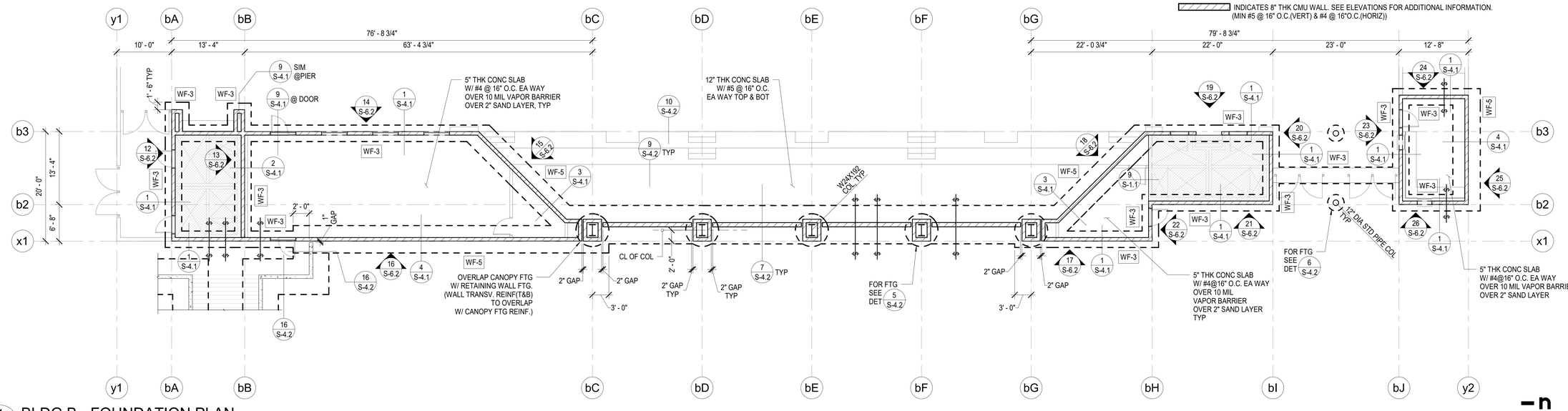

1 S-2.2 BLDG B - FOUNDATION PLAN

SCALE : 1/8" = 1'-0"

4/7/2023 4:26:15 PM

IDENTIFICATION STAMP
DIV. OF THE STATE ARCHITECT
APP: 03-122664 INC:
REVIEWED FOR
SS ☑ FLS ☑ ACS ☑
DATE: 05/12/2023

pjhm architects

LICENSED ARCHITECT
RICHARD W. FRUIN
No. C15585
REN. 02/25
STATE OF CALIFORNIA

VCA ENGINEERS, INC.
2151 Michelson Dr. #240
Irvine, CA 92612
Tel. 949.679.0870
Fax. 949.679.9370
Project No.: 1747

PROFESSIONAL ENGINEER
KEUN PARK
No. 34029
Exp. 9/30/24
STATE OF CALIFORNIA

LA Office: 837 Traction Avenue, #410, Los Angeles, CA 90013 • Web: pjhm.com
SD Phone: 760.730.5527 • OC Office: 24401 Ridge Route Drive #100, Laguna Hills, CA 92653 • OC Phone: 949.496.6191 • SD Office: 804 Pier View Way #103, Oceanside, CA 92054

HIGHLAND HIGH SCHOOL
50M POOL & AQUATICS CENTER

KERN HIGH SCHOOL DISTRICT

BLDG B - FOUNDATION & ROOF FRAMING PLAN

S-2.2

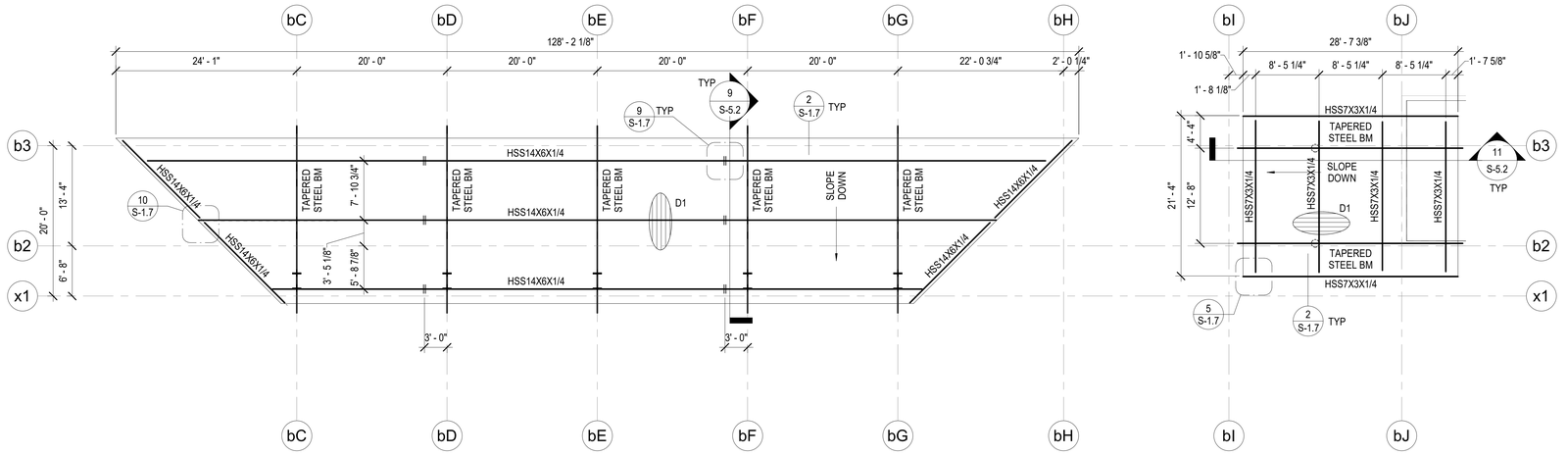

1 BLDG B CANOPY - ROOF FRAMING PLAN
S-2.2.1 SCALE : 1/8" = 1'-0"

CANOPY FRAMING NOTES:

1. FOR GENERAL NOTES, SEE S-0.0 SERIES.
2. FOR TYPICAL DETAILS, SEE S-1.0 SERIES.
3. DENOTES BEAM SPLICE PER 9 / S-1.7
4. SEE 5 / S-1.7 FOR HSS TO HSS CONNECTION.
5. DENOTES DECK PER SCHEDULE, SEE DET 2 / S-1.7

DECK SCHEDULE

DECK MARK	TYPE	GAGE	I (IN4/FT)	S (TOP+) (IN3/FT)	S (BOT-) (IN3/FT)	TOTAL DEPTH (IN)	CONC FILL TYPE	SIDE-SEAM ATTACHMENT	ATTACHMENT PATTERN
D1	VERCO 2.0D IAPMO UES ER-0423	18	0.612	0.463	0.450	2"	BARE DECK	SEE DET 4 S-1.7	24.5/4 1 S-1.7

IDENTIFICATION STAMP
DIV. OF THE STATE ARCHITECT
APP: 03-122664 INC:
REVIEWED FOR
SS ☑ FLS ☑ ACS ☑
DATE: 05/12/2023

pjhm architects

LICENSED ARCHITECT
THOMAS W. KRUSE
NO. C15585
REN. 02/25
STATE OF CALIFORNIA

VCA ENGINEERS, INC.
CIVIL • STRUCTURAL
2151 Michelson Dr. #240
Irvine, CA 92612
Tel. 949.679.0870
Fax. 949.679.9370
Project No.: i747

REGISTERED PROFESSIONAL ENGINEER
KEUN NA
No. S4029
Exp. 9/30/24
STATE OF CALIFORNIA

HIGHLAND HIGH SCHOOL
50M POOL & AQUATICS CENTER

KERN HIGH SCHOOL DISTRICT

CANOPY - FOUNDATION & FRAMING PLAN

S-2.2.1

OC Office: 24461 Ridge Route Drive #100, Laguna Hills, CA 92653 • OC Phone: 949.496.6191 • SD Office: 804 Pier View Way #103, Oceanside, CA 92054 • SD Phone: 760.730.5527 • LA Office: 837 Traction Avenue, #410, Los Angeles, CA 90013 • LA Phone: 213.278.0172 • Web: pjhm.com

4/7/2023 4:26:16 PM

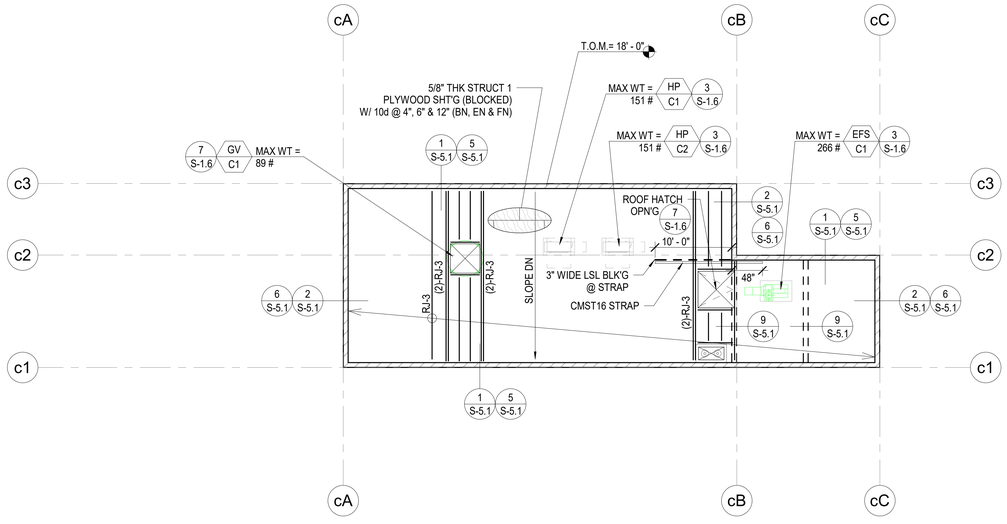

3 S-2.3 BLDG C - ROOF FRAMING PLAN
SCALE : 1/8" = 1'-0"

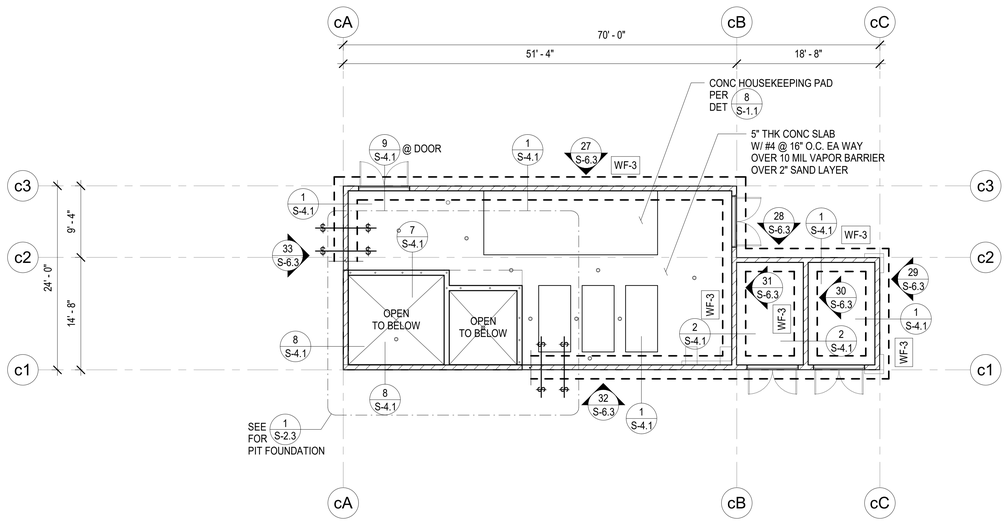

2 S-2.3 BLDG C - FOUNDATION PLAN
SCALE : 1/8" = 1'-0"

ROOF FRAMING NOTES:

1. FOR GENERAL NOTES, SEE S-0.0 SERIES.
2. FOR TYPICAL DETAILS, SEE S-1.0 SERIES.
3. INDICATES ROOF SHEATHING.
4. WALL LEGENDS
   INDICATES 8" THK CMU WALL SEE ELEVATIONS FOR ADDITIONAL INFORMATION. (MIN #5 @ 16" O.C.(VERT) & #4 @ 16"O.C.(HORIZ))
5. RJ-3 : 16" DEEP RED-I90HS @ 16" O.C. (FOR PIPE SUPPORT BELOW JOISTS @ BLDG C, PROVIDE SHOP DRAWING PRIOR TO INSTALL. MAX POINT LOAD PER EA. JOIST IS 1.5K.)

STRAP @ BLK'G

BLK'G PER PLAN

STRAP PER PLAN

FOUNDATION NOTES:

1. FOR GENERAL NOTES, SEE S-0.0 SERIES.
2. FOR TYPICAL DETAILS, SEE S-1.0 SERIES.
3. WF-# INDICATES WALL FOOTING.

WALL FOOTING SCHEDULE

MARK	DIMENSIONS		REINFORCEMENT		#4 TIES @ 12" O.C., U.N.O.
	WIDTH	DEPTH	TOP BARS	BOTTOM BARS	ALT CAP
WF-3	3' - 0"	24"	(3)-#6 T&B	(3)-#6 T&B	
WF-5	5' - 0"	24"	(5)-#6 T&B	(5)-#6 T&B	

4. DENOTES DEPRESSED SLAB.
5. DENOTES STEPPED FOOTING PER 8 / S-1.2
6. WALL LEGENDS
   INDICATES 8" THK CMU WALL. SEE ELEVATIONS FOR ADDITIONAL INFORMATION. (MIN #5 @ 16" O.C.(VERT) & #4 @ 16"O.C.(HORIZ))

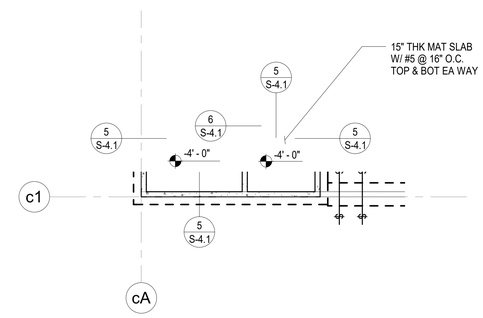

1 S-2.3 BLDG C - PIT FOUNDATION PLAN
SCALE : 1/8" = 1'-0"

IDENTIFICATION STAMP
DIV. OF THE STATE ARCHITECT
APP: 03-122664 INC:
REVIEWED FOR
SS ☑ FLS ☑ ACS ☑
DATE: 05/12/2023

pjhm architects

LICENSED ARCHITECT
THOMAS W. KRUSE
NO. C15585
REN. 02/25
STATE OF CALIFORNIA

VCA ENGINEERS, INC.
CIVIL • STRUCTURAL
2151 Michelson Dr. #240
Irvine, CA 92612
Tel. 949.679.0870
Fax. 949.679.9370
Project No.: i747

REGISTERED PROFESSIONAL ENGINEER
JOHN KEUN NA
No. S4029
Exp. 9/30/24
STRUCTURAL
STATE OF CALIFORNIA

HIGHLAND HIGH SCHOOL
50M POOL & AQUATICS CENTER

KERN HIGH SCHOOL DISTRICT

BLDG C - FOUNDATION & ROOF FRAMING PLAN

S-2.3

OC Office: 24461 Ridge Route Drive #100, Laguna Hills, CA 92653 • OC Phone: 949.496.6191 • SD Office: 804 Pier View Way #103, Oceanside, CA 92054 • SD Phone: 760.730.5527 • LA Office: 837 Traction Avenue, #410, Los Angeles, CA 90013 • LA Phone: 213.278.0172 • Web: pjhm.com

4/7/2023 4:26:18 PM

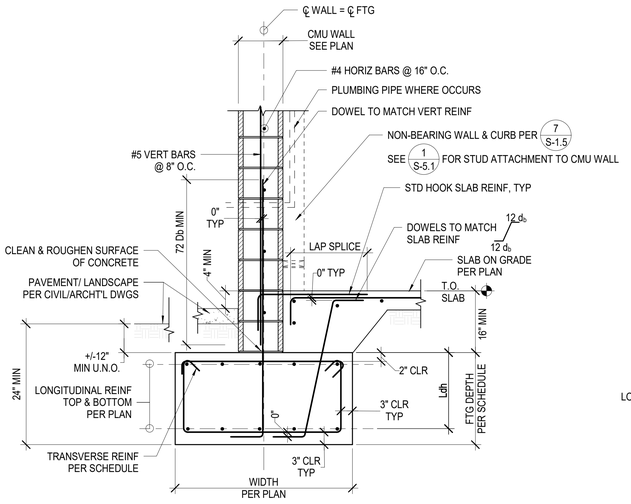

1 S-4.1 WALL FOOTING @ CONC WALL (BLDG EXTERIOR)

SCALE: N.T.S.

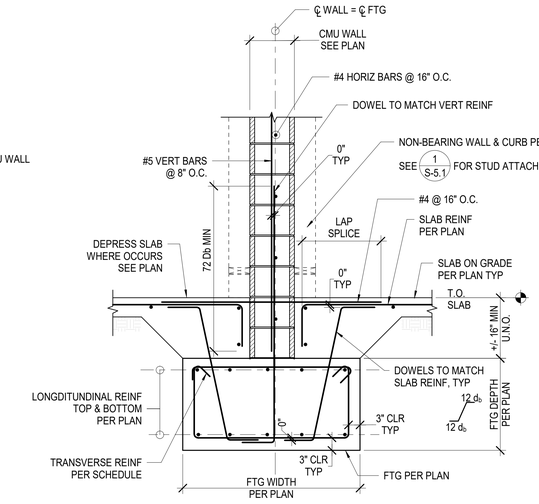

2 S-4.1 INTERIOR CMU WALL FOOTING DETAIL

SCALE: N.T.S.

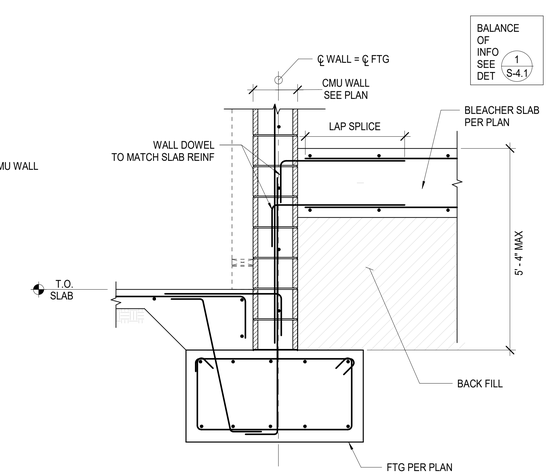

3 S-4.1 EXTERIOR CMU WALL FOOTING ALONG BLEACHER CONCRETE SLAB

SCALE: N.T.S.

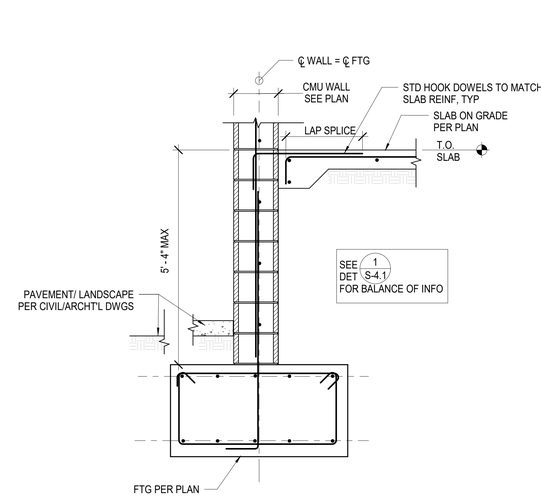

4 S-4.1 EXTERIOR CMU WALL FOOTING DETAIL

SCALE: N.T.S.

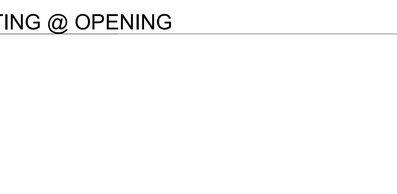

5 S-4.1 PIT FOUNDATION

SCALE: N.T.S.

6 S-4.1 CONC WALL @ PIT SLAB

SCALE: N.T.S.

7 S-4.1 TOP OF PIT WALL DETAIL

SCALE: N.T.S.

8 S-4.1 PIT WALL TRANSITION DETAIL

SCALE: N.T.S.

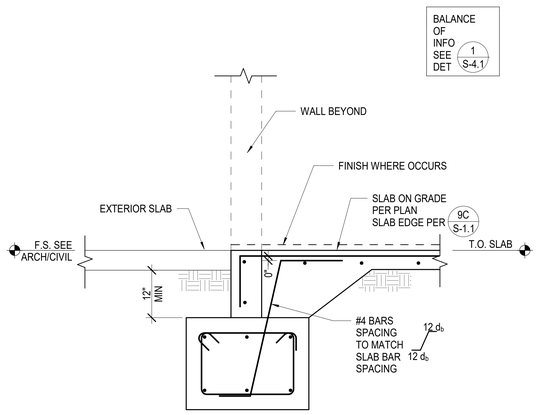

9 S-4.1 FOOTING @ OPENING

SCALE: N.T.S.

4/7/2023 4:26:19 PM

IDENTIFICATION STAMP
DIV. OF THE STATE ARCHITECT
APP: 03-122664 INC:
REVIEWED FOR
SS ☑ FLS ☑ ACS ☑
DATE: 05/12/2023

pjhm architects

LICENSED ARCHITECT
RICHARD W. PJHM
No. C15585
REN. 02/25
STATE OF CALIFORNIA

VCA ENGINEERS, INC.
CIVIL • STRUCTURAL
2151 Michelson Dr. #240
Irvine, CA 92612
Tel. 949.679.0870
Fax. 949.679.9370
Project No.: 1747

PROFESSIONAL ENGINEER
KEUN PARK
No. 54029
Exp. 9/30/24
CIVIL
STATE OF CALIFORNIA

LA Phone: 213.278.0172 • Web: pjhm.com
LA Office: 837 Traction Avenue, #410, Los Angeles, CA 90013
SD Phone: 760.730.5527 • SD Office: 804 Pier View Way #103, Oceanside, CA 92054
OC Phone: 949.496.6191 • OC Office: 24461 Ridge Route Drive #100, Laguna Hills, CA 92653

HIGHLAND HIGH SCHOOL
50M POOL & AQUATICS CENTER

KERN HIGH SCHOOL DISTRICT

FOUNDATION DETAILS

S-4.1

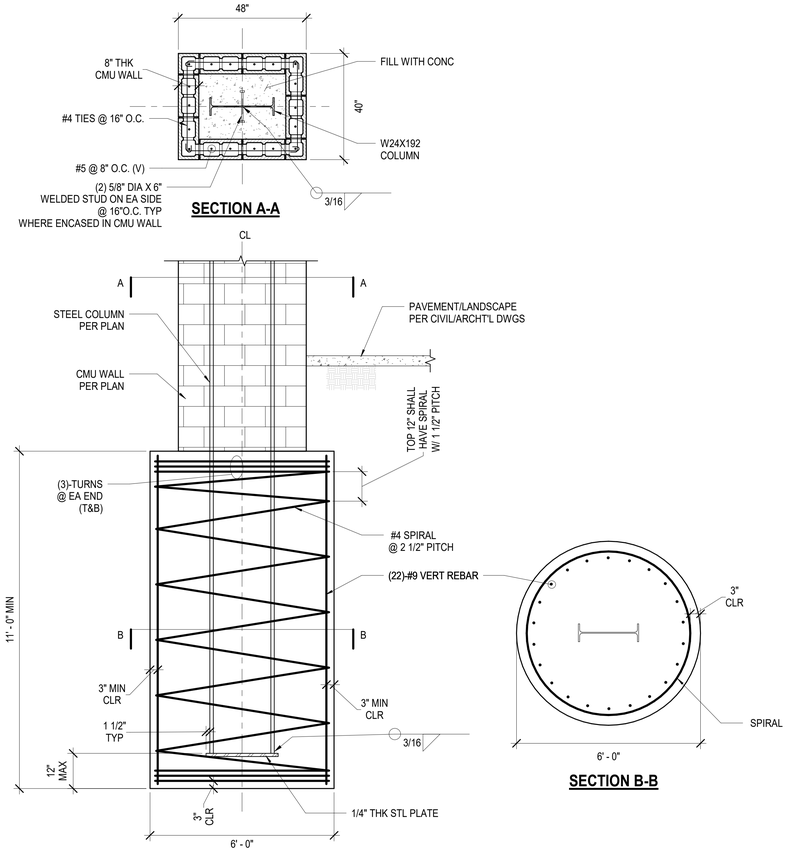

5 S-4.2 CANOPY FOOTING

SCALE: N.T.S.

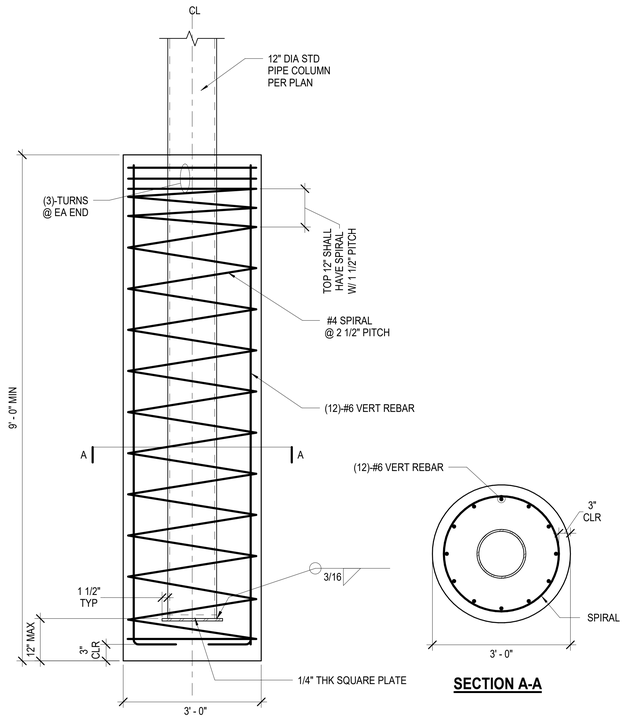

6 S-4.2 CANOPY FOOTING

SCALE: N.T.S.

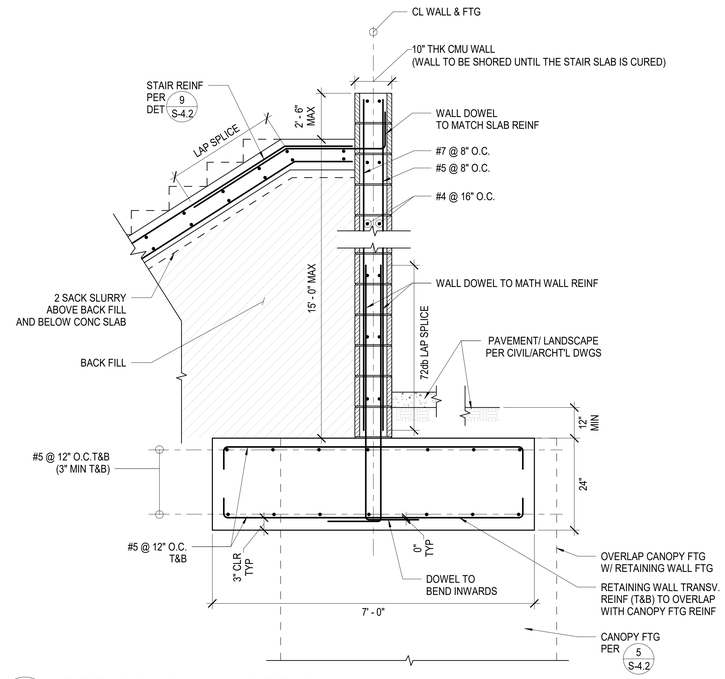

7 S-4.2 RETAINING WALL DETAIL

SCALE: 3/4" = 1'-0"

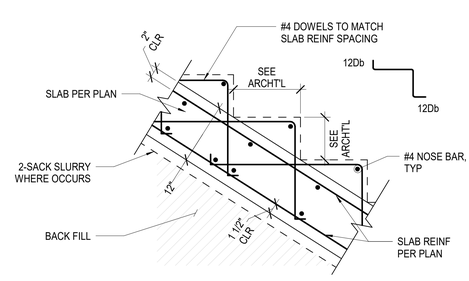

9 S-4.2 BLEACHER SEAT CONC SLAB SECTION

SCALE: N.T.S.

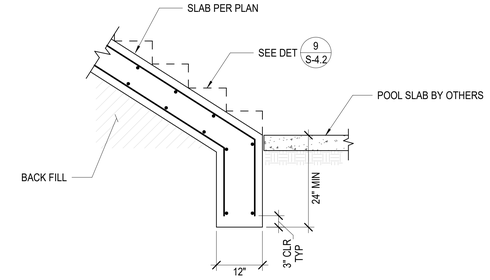

10 S-4.2 BLEACHER SEAT CONC SLAB EDGE

SCALE: 3/4" = 1'-0"

WALL INFO				FOOTING INFO			
HT MAX	W1	V1 BARS	H1 BARS	B	T	F1 BARS	F2 BARS
7' - 0"	8"	#5 @ 8" O.C.	#5 @ 12" O.C.	6' - 6"	18"	#5 @ 8" O.C.	#5 @ 12" O.C.
6' - 0"	8"	#5 @ 12" O.C.	#5 @ 12" O.C.	4' - 6"	18"	#5 @ 12" O.C.	#5 @ 12" O.C.
5' - 0"	8"	#5 @ 12" O.C.	#5 @ 12" O.C.	3' - 0"	18"	#5 @ 12" O.C.	#5 @ 12" O.C.
4' - 0"	8"	#5 @ 12" O.C.	#5 @ 12" O.C.	2' - 6"	18"	#5 @ 12" O.C.	#5 @ 12" O.C.

15 S-4.2 RETAINING WALL DETAIL WITH ORNAMENTAL STEEL FENCE POST EMBED

SCALE: N.T.S.

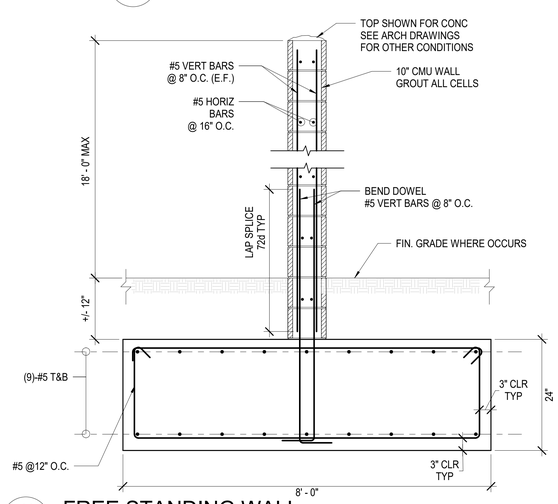

14 S-4.2 FREE STANDING WALL

SCALE: N.T.S.

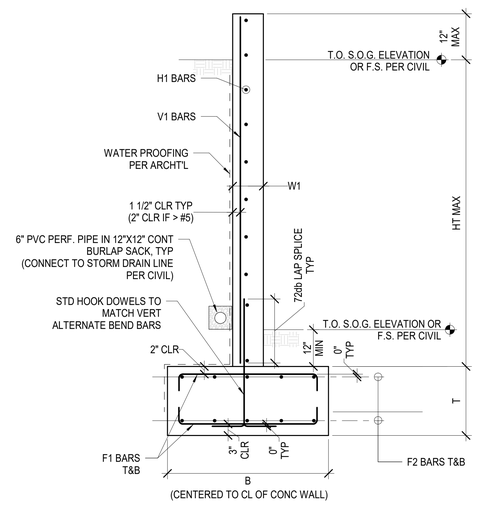

TYPICAL WALL DETAIL (HT ≤ 8'-0")

16 S-4.2 CONCRETE RETAINING WALL DETAIL

SCALE: 3/4" = 1'-0"

IDENTIFICATION STAMP
DIV. OF THE STATE ARCHITECT
APP: 03-122664 INC:
REVIEWED FOR
SS ☑ FLS ☑ ACS ☑
DATE: 05/12/2023

pjhm architects

LICENSED ARCHITECT RICHARD W. RUDOLF NO. C15585 REN. 02/25 STATE OF CALIFORNIA

VCA ENGINEERS, INC.
2151 Michelson Dr. #240
Irvine, CA 92612
Tel. 949.679.0870
Fax. 949.679.9370
Project No.: 1747

PROFESSIONAL ENGINEER KEUN PARK No. 34029 Exp. 9/30/24 STATE OF CALIFORNIA

HIGHLAND HIGH SCHOOL
50M POOL & AQUATICS CENTER

KERN HIGH SCHOOL DISTRICT

FOUNDATION DETAILS

S-4.2

OC Office: 24461 Ridge Route Drive #100, Laguna Hills, CA 92653 • OC Phone: 949.496.6191 • SD Office: 804 Pier View Way #103, Oceanside, CA 92054
SD Phone: 760.730.5527 • LA Office: 837 Traction Avenue, #410, Los Angeles, CA 90013 • LA Phone: 213.278.0172 • Web: pjhm.com

4/7/2023 4:26:20 PM

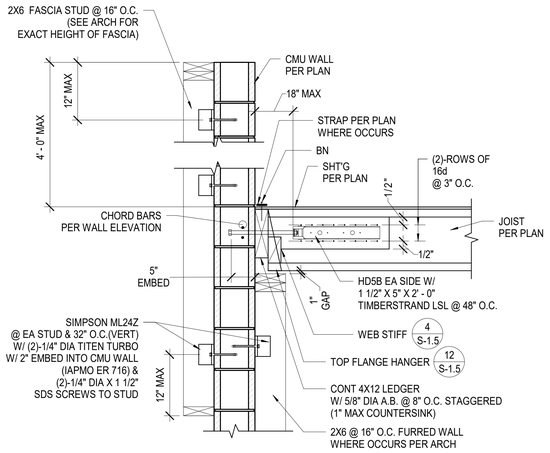

1 S-5.1 WALL TIE JOIST PERPENDICULAR TO CMU WALL
SCALE: N.T.S.

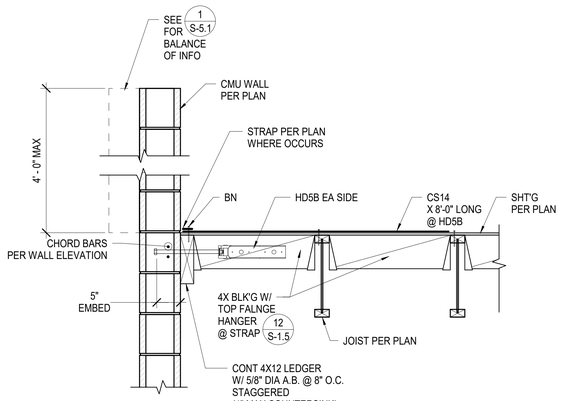

2 S-5.1 WALL TIE JOIST PARALLEL TO CMU WALL
SCALE: N.T.S.

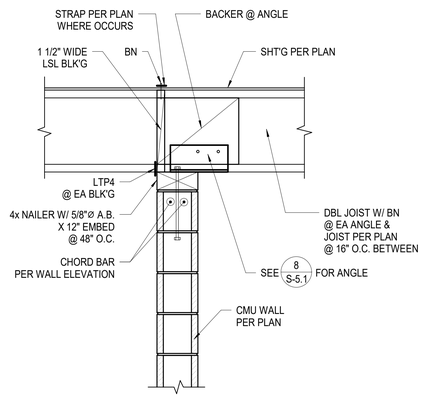

3 S-5.1 CANTILEVERED JOIST @ CMU WALL
SCALE: N.T.S.

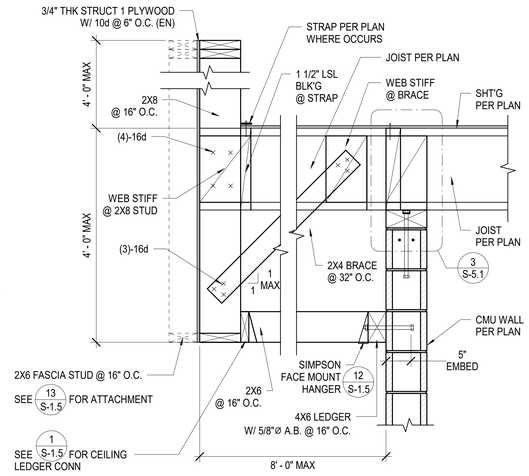

4 S-5.1 FASCIA PARAPET DETAIL
SCALE: N.T.S.

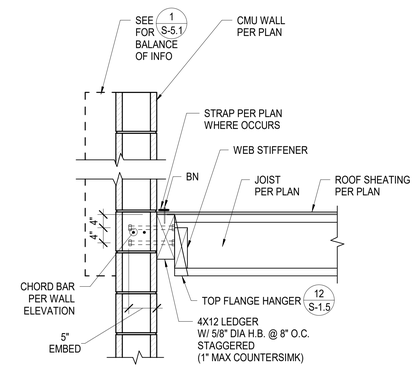

5 S-5.1 JOISTS PERPENDICULAR TO CMU WALL
SCALE: N.T.S.

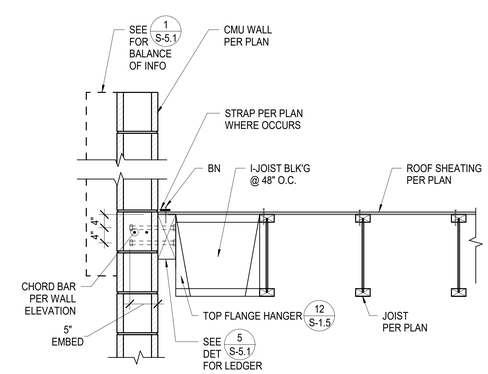

6 S-5.1 JOISTS PARALLEL TO CMU WALL
SCALE: N.T.S.

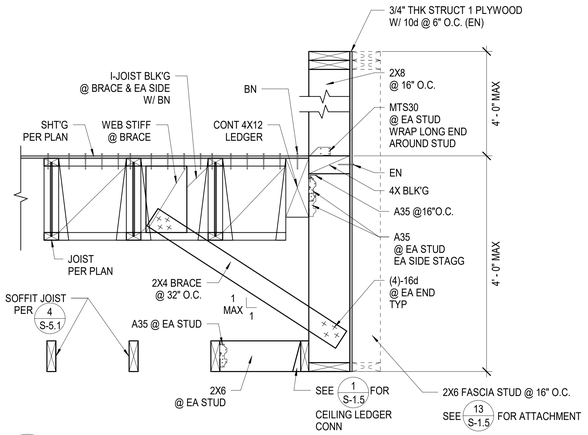

7 S-5.1 FASCIA PARAPET DETAIL
SCALE: N.T.S.

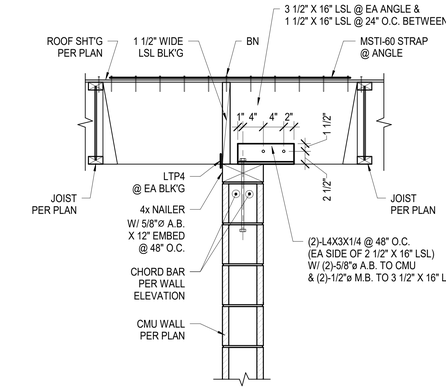

8 S-5.1 JOISTS PARALLEL TO CMU WALL BELOW
SCALE: N.T.S.

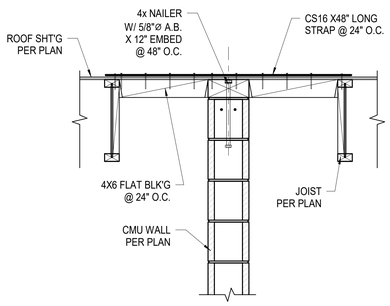

9 S-5.1 CMU WALL SECTION @ FIRE RATED WALL
SCALE: N.T.S.

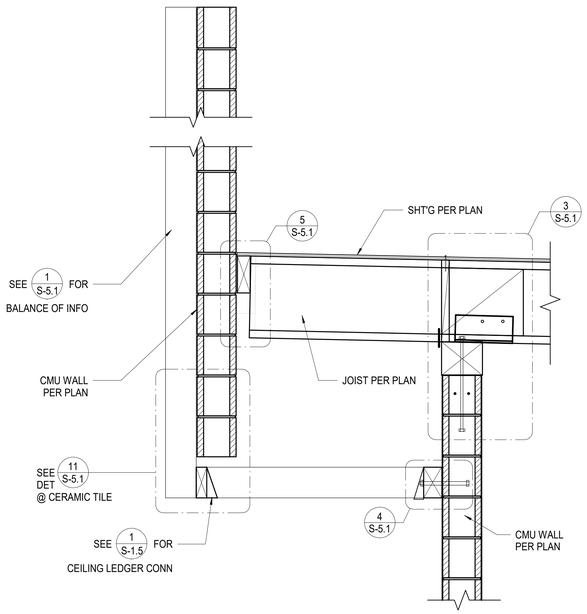

10 S-5.1 WALL TIE JOIST @ CMU WALL LINTEL CONDITION
SCALE: 1" = 1'-0"

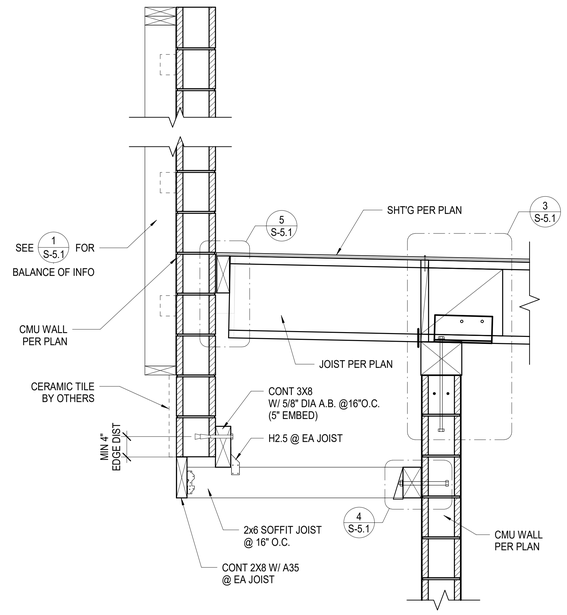

11 S-5.1 WALL TIE JOIST @ CMU WALL LINTEL CONDITION
SCALE: 1" = 1'-0"

4/7/2023 4:26:20 PM

IDENTIFICATION STAMP
DIV. OF THE STATE ARCHITECT
APP: 03-122664 INC:
REVIEWED FOR
SS ☑ FLS ☑ ACS ☑
DATE: 05/12/2023

pjhm architects
LA Phone: 213.278.0172 • Web: pjhm.com
LICENSED ARCHITECT
RICHARD W. FRIEND
NO. C15585
REN. 02/25
STATE OF CALIFORNIA
VCA ENGINEERS, INC.
2151 Michelson Dr. #240
Irvine, CA 92612
Tel. 949.679.0870
Fax. 949.679.9370
Project No.: 1747
PROFESSIONAL ENGINEER
KEUN PARK
No. 34029
Exp. 9/30/24
CIVIL
STATE OF CALIFORNIA
LA Office: 837 Traction Avenue, #410, Los Angeles, CA 90013
SD Phone: 760.730.5527
SD Office: 804 Pier View Way #103, Oceanside, CA 92054
OC Phone: 949.496.6191
OC Office: 24461 Ridge Route Drive #100, Laguna Hills, CA 92653

HIGHLAND HIGH SCHOOL
50M POOL & AQUATICS CENTER

KERN HIGH SCHOOL DISTRICT

FRAMING DETAILS

S-5.1

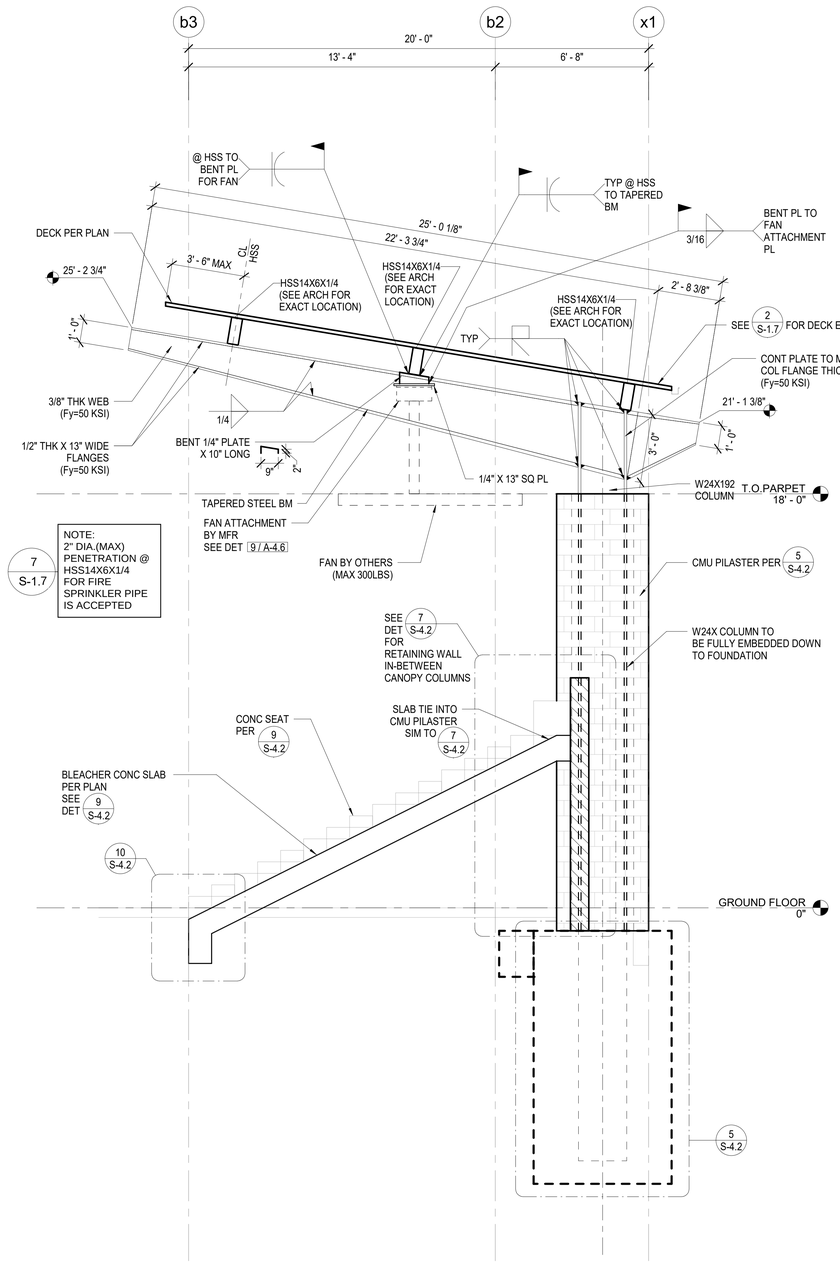

9 S-5.2 CANOPY SECTION

SCALE: 3/8" = 1'-0"

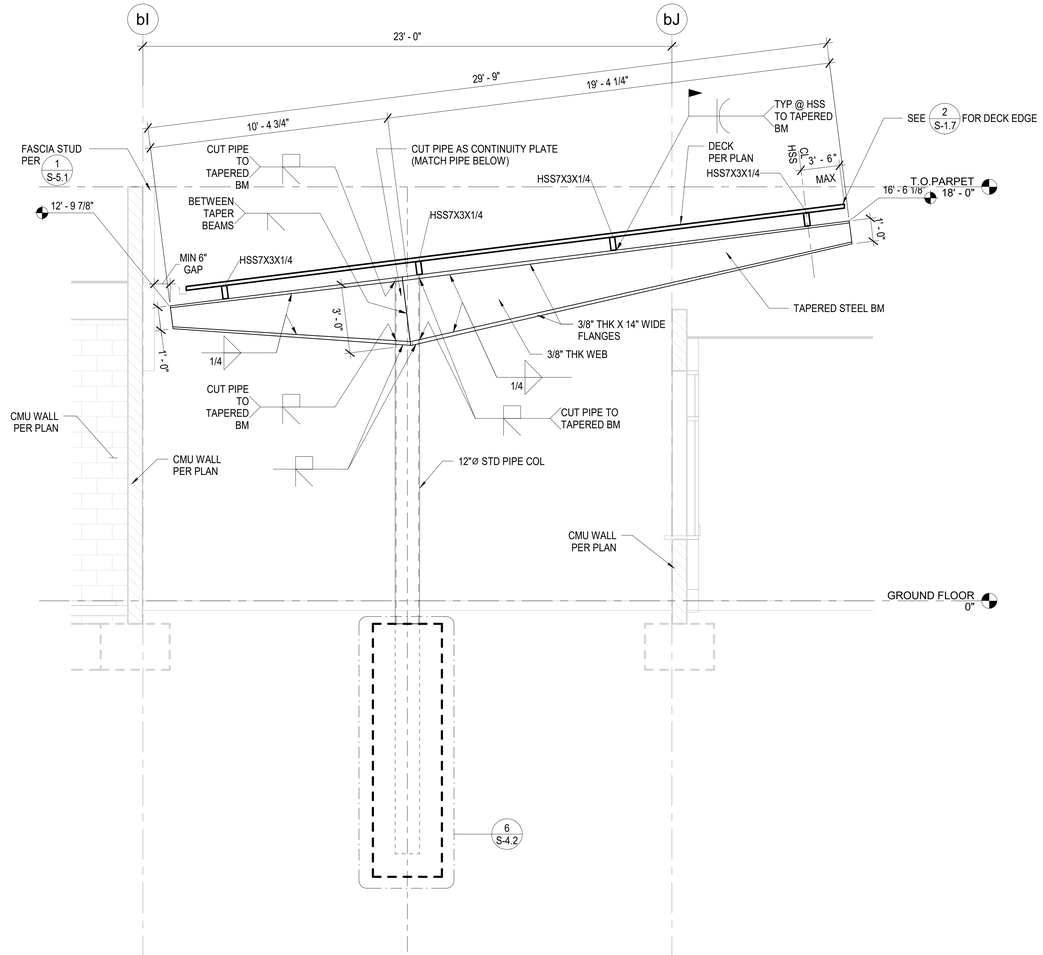

11 S-5.2 CANOPY SECTION

SCALE: 3/8" = 1'-0"

4/7/2023 4:26:22 PM

IDENTIFICATION STAMP
DIV. OF THE STATE ARCHITECT
APP: 03-122664 INC:
REVIEWED FOR
SS ☑ FLS ☑ ACS ☑
DATE: 05/12/2023

pjhm architects

LICENSED ARCHITECT
RICHARD W. FRUIN
NO. C15585
REN. 02/25
STATE OF CALIFORNIA

VCA ENGINEERS, INC
2151 Michelson Dr. #240
Irvine, CA 92612
Tel. 949.679.0870
Fax. 949.679.9370
Project No.: 1747

PROFESSIONAL ENGINEER
KEUN PARK
No. 34029
Exp. 9/30/24
CIVIL
STATE OF CALIFORNIA

SD Phone: 760.730.5527 • LA Office: 837 Traction Avenue, #410, Los Angeles, CA 90013 • LA Phone: 213.278.0172 • Web: pjhm.com

OC Office: 24461 Ridge Route Drive #100, Laguna Hills, CA 92653 • OC Phone: 949.496.6191 • SD Office: 804 Pier View Way #103, Oceanside, CA 92054 • SD Phone: 760.730.5527

HIGHLAND HIGH SCHOOL
50M POOL & AQUATICS CENTER

KERN HIGH SCHOOL DISTRICT

FRAMING DETAILS

S-5.2

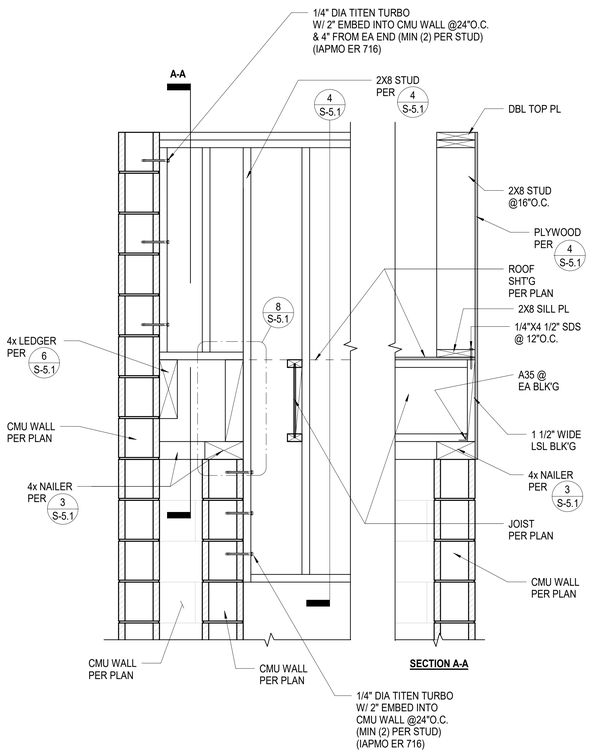

5 S-5.3 SECTION @ GRID - bA
SCALE : N.T.S.

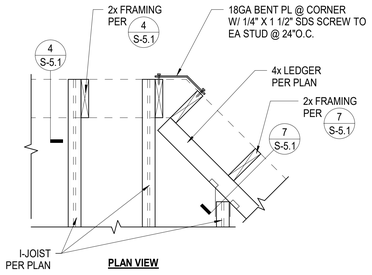

2 S-5.3 PARAPET CORNER DETAIL
SCALE : N.T.S.

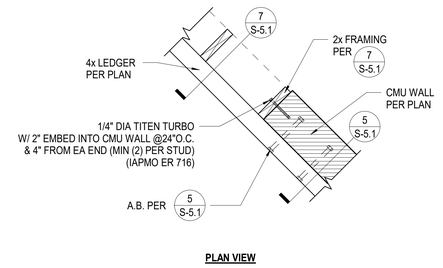

3 S-5.3 PARAPET DETAIL @ CMU WALL INTERSECTION
SCALE : N.T.S.

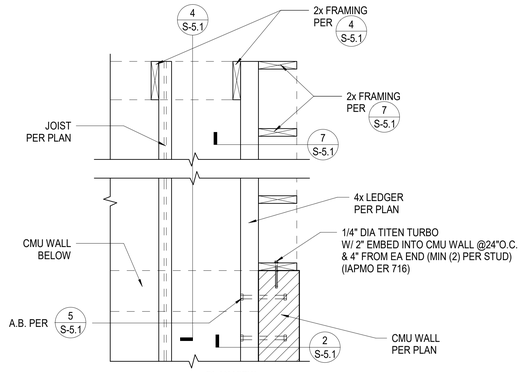

4 S-5.3 PARAPET DETAIL @ CMU WALL INTERSECTION
SCALE : N.T.S.

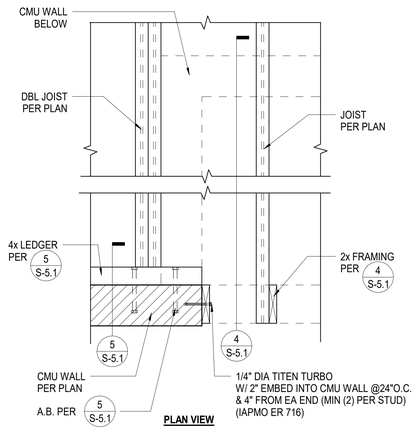

6 S-5.3 PARAPET DETAIL @ CMU WALL INTERSECTION
SCALE : N.T.S.

IDENTIFICATION STAMP
DIV. OF THE STATE ARCHITECT
APP: 03-122664 INC:
REVIEWED FOR
SS ☑ FLS ☑ ACS ☑
DATE: 05/12/2023

pjhm architects

LICENSED ARCHITECT
THOMAS W. KRUSE
NO. C15585
REN. 02/25
STATE OF CALIFORNIA

VCA ENGINEERS, INC.
CIVIL • STRUCTURAL • MECH • ARC • ARC
2151 Michelson Dr. #240
Irvine, CA 92612
Tel. 949.679.0870
Fax. 949.679.9370
Project No.: i747

REGISTERED PROFESSIONAL ENGINEER
YOUNG KEUN NA
No. S4029
Exp. 9/30/24
STRUCTURAL
STATE OF CALIFORNIA

HIGHLAND HIGH SCHOOL
50M POOL & AQUATICS CENTER

KERN HIGH SCHOOL DISTRICT

FRAMING DETAILS

S-5.3

OC Office: 24461 Ridge Route Drive #100, Laguna Hills, CA 92653 • OC Phone: 949.496.6191 • SD Office: 804 Pier View Way #103, Oceanside, CA 92054 • SD Phone: 760.730.5527 • LA Office: 837 Traction Avenue, #410, Los Angeles, CA 90013 • LA Phone: 213.278.0172 • Web: pjhm.com

4/7/2023 4:26:24 PM

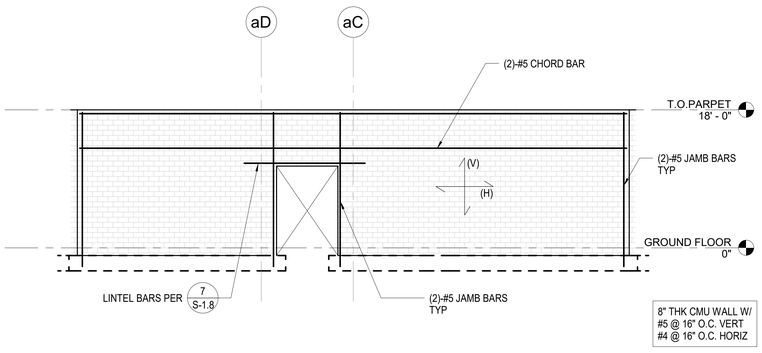

1 S-6.1 CMU WALL ELEVATION @ GL-a3

SCALE : 1/8" = 1'-0"

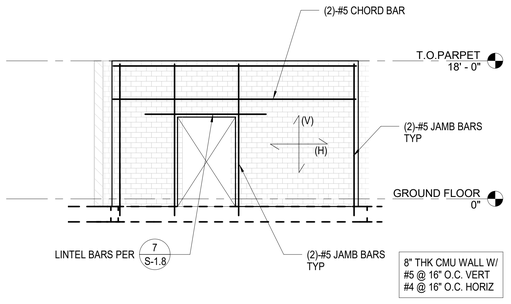

2 S-6.1 CMU WALL ELEVATION

SCALE : 1/8" = 1'-0"

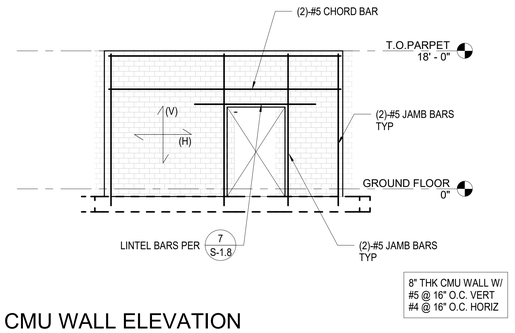

3 S-6.1 CMU WALL ELEVATION

SCALE : 1/8" = 1'-0"

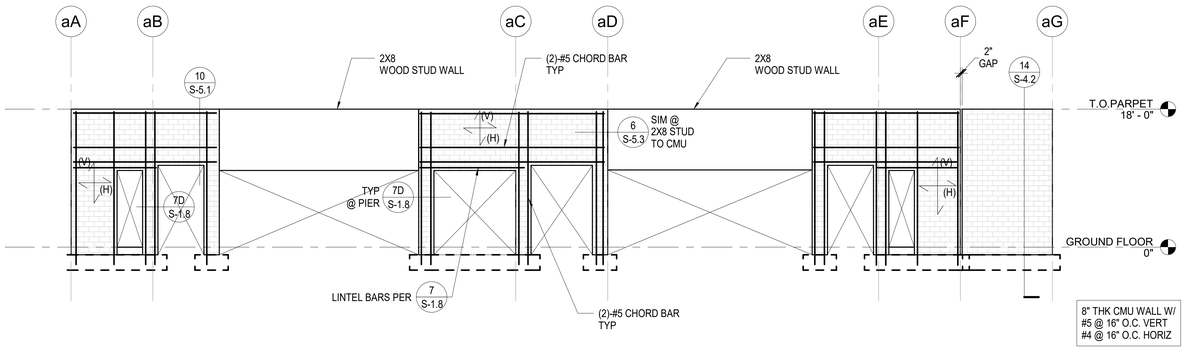

4 S-6.1 CMU WALL ELEVATION @ GL-a1

SCALE : 1/8" = 1'-0"

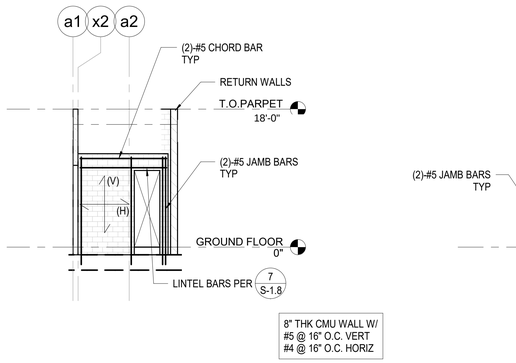

5 S-6.1 CMU WALL ELEVATION @ GL-aB

SCALE : 1/8" = 1'-0"

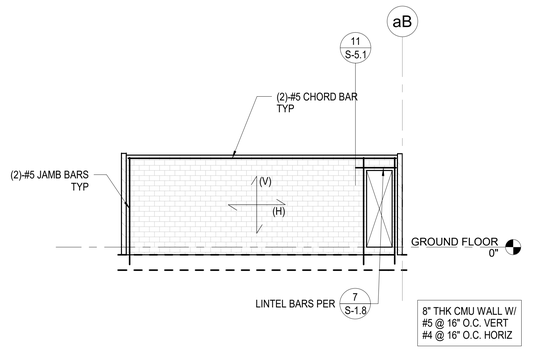

6 S-6.1 CMU WALL ELEVATION

SCALE : 1/8" = 1'-0"

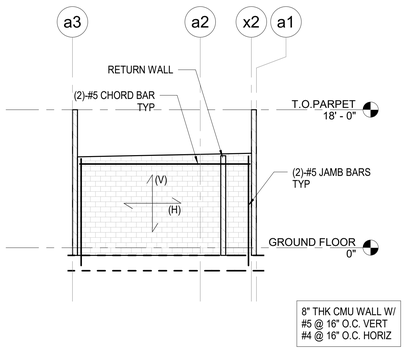

7 S-6.1 CMU WALL ELEVATION

SCALE : 1/8" = 1'-0"

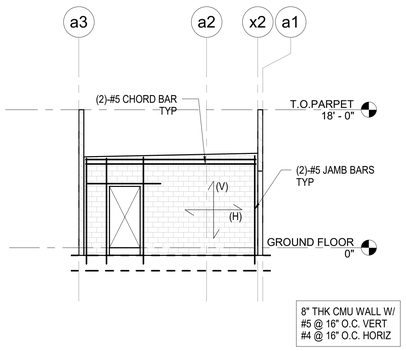

8 S-6.1 CMU WALL ELEVATION @ GL-aC

SCALE : 1/8" = 1'-0"

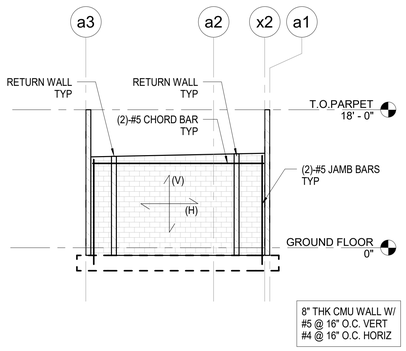

9 S-6.1 CMU WALL ELEVATION @ GL-aD

SCALE : 1/8" = 1'-0"

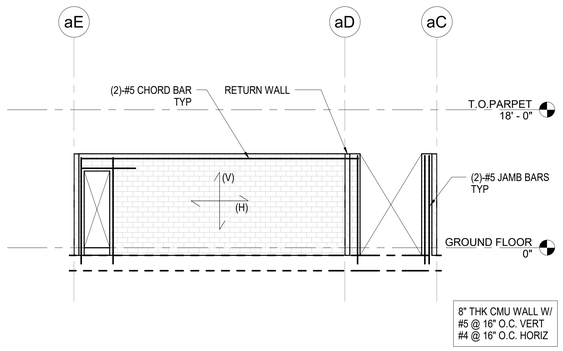

10 S-6.1 CMU WALL ELEVATION

SCALE : 1/8" = 1'-0"

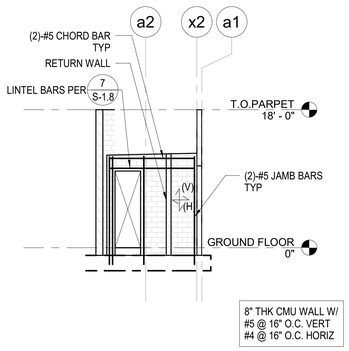

11 S-6.1 CMU WALL ELEVATION @ GL-aE

SCALE : 1/8" = 1'-0"

ELEVATION NOTES:

1. FOR TYPICAL REINFORCEMENT DETAIL SEE 7 / S-1.8
2. FOR TYPICAL JOINT DETAIL SEE 1 / S-1.8
3. FOR TYPICAL CORNER REINFORCEMENT DETAIL SEE 2 / S-1.8
4. FOR TYPICAL AND ADDITIONAL REINFORCEMENT SEE ELEVATIONS ON THIS SHEET.

IDENTIFICATION STAMP
DIV. OF THE STATE ARCHITECT
APP: 03-122664 INC:
REVIEWED FOR
SS ☑ FLS ☑ ACS ☑
DATE: 05/12/2023

pjhm architects
Web: pjhm.com
LA Phone: 213.278.0172 • LA Office: 837 Traction Avenue, #410, Los Angeles, CA 90013
SD Phone: 760.730.5527 • SD Office: 804 Pier View Way #103, Oceanside, CA 92054
OC Phone: 949.496.6191 • OC Office: 24461 Ridge Route Drive #100, Laguna Hills, CA 92653

LICENSED ARCHITECT
RICHARD W. FRIEND
No. C15585
REN. 02/25
STATE OF CALIFORNIA

VCA ENGINEERS, INC.
2151 Michelson Dr. #240
Irvine, CA 92612
Tel. 949.679.0870
Fax. 949.679.9370
Project No.: 1747

PROFESSIONAL ENGINEER
KEVIN R. KUN
No. 54029
Exp. 9/30/24
CIVIL
STATE OF CALIFORNIA

HIGHLAND HIGH SCHOOL
50M POOL & AQUATICS CENTER

KERN HIGH SCHOOL DISTRICT

CMU WALL ELEVATIONS - BLDG A

S-6.1

4/7/2023 4:26:26 PM

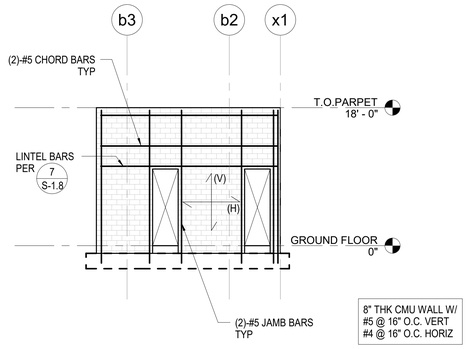

12 S-6.2 CMU WALL ELEVATION @ GL-bA

SCALE : 1/8" = 1'-0"

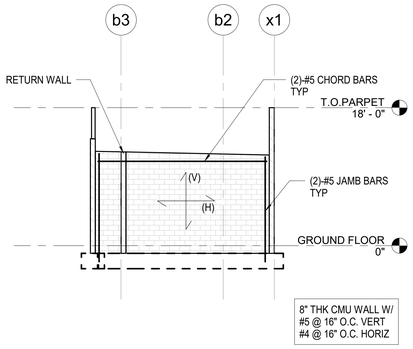

13 S-6.2 CMU WALL ELEVATION @ GL-bB

SCALE : 1/8" = 1'-0"

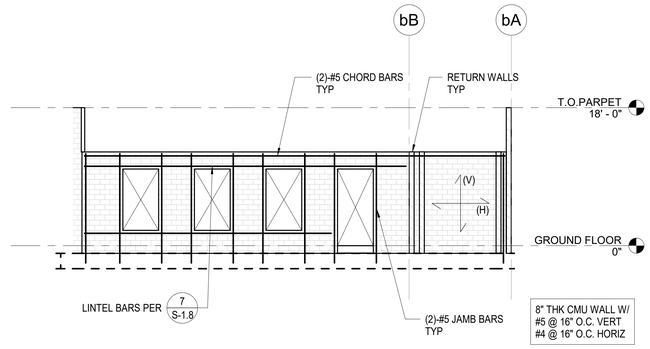

14 S-6.2 CMU WALL ELEVATION @ GL-b3

SCALE : 1/8" = 1'-0"

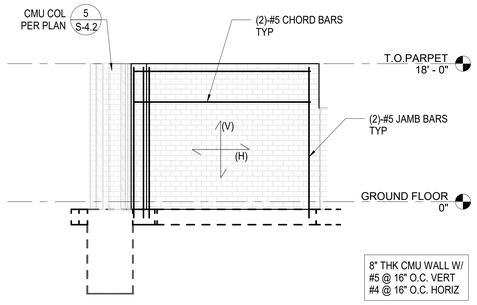

15 S-6.2 CMU WALL ELEVATION

SCALE : 1/8" = 1'-0"

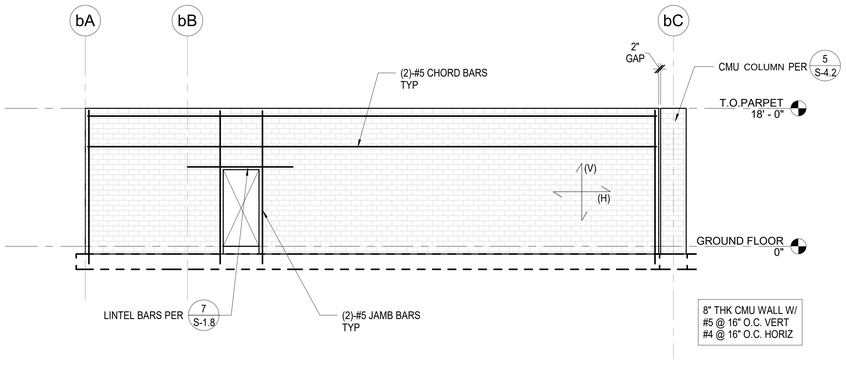

16 S-6.2 CMU WALL ELEVATION @ GL-x1

SCALE : 1/8" = 1'-0"

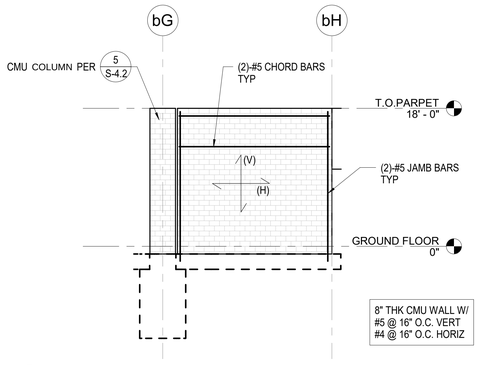

17 S-6.2 CMU WALL ELEVATION @ GL-x1

SCALE : 1/8" = 1'-0"

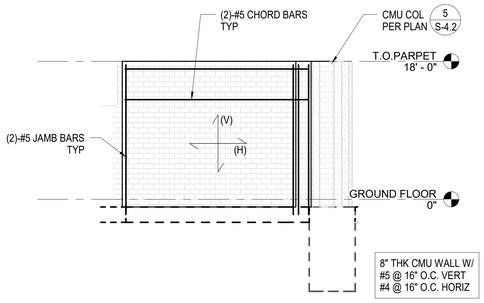

18 S-6.2 CMU WALL ELEVATION

SCALE : 1/8" = 1'-0"

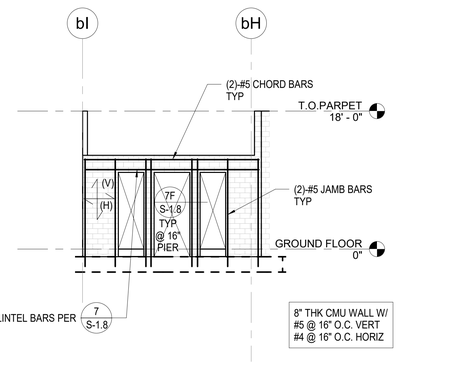

19 S-6.2 CMU WALL ELEVATION @ GL-b3

SCALE : 1/8" = 1'-0"

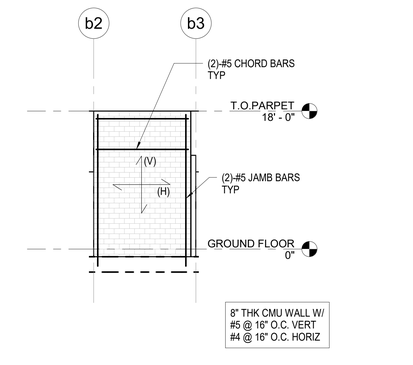

20 S-6.2 CMU WALL ELEVATION @ GL-bI

SCALE : 1/8" = 1'-0"

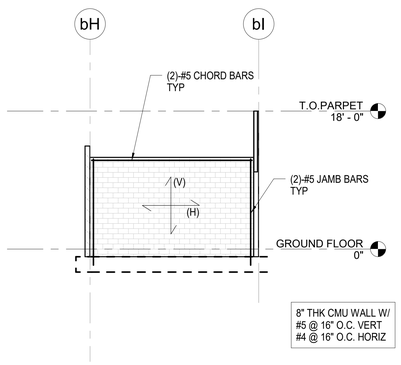

21 S-6.2 CMU WALL ELEVATION @ GL-b2

SCALE : 1/8" = 1'-0"

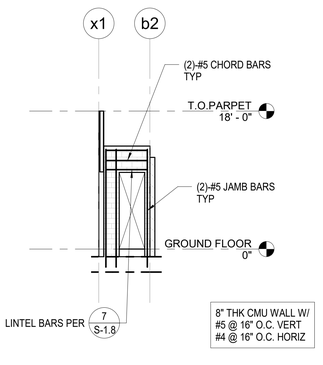

22 S-6.2 CMU WALL ELEVATION @ GL-bH

SCALE : 1/8" = 1'-0"

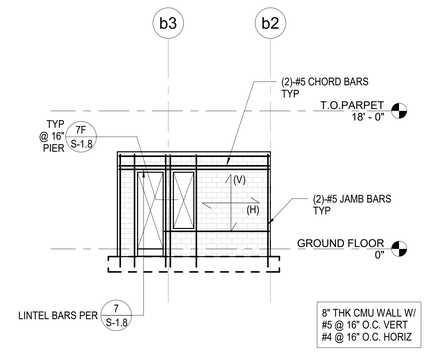

23 S-6.2 CMU WALL ELEVATION @ GL-bJ

SCALE : 1/8" = 1'-0"

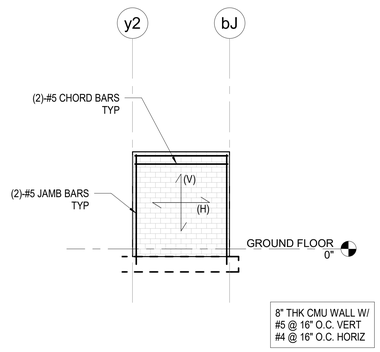

24 S-6.2 CMU WALL ELEVATION

SCALE : 1/8" = 1'-0"

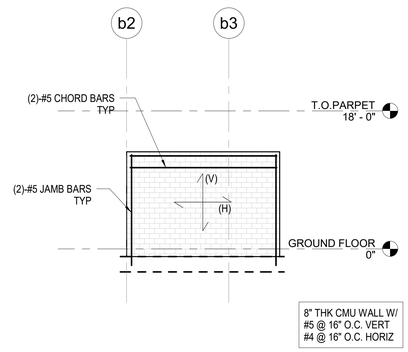

25 S-6.2 CMU WALL ELEVATION @ GL-y2

SCALE : 1/8" = 1'-0"

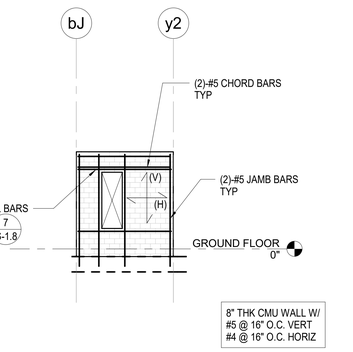

26 S-6.2 CMU WALL ELEVATION @ GL-b2

SCALE : 1/8" = 1'-0"

ELEVATION NOTES:

1. FOR TYPICAL REINFORCEMENT DETAIL SEE 7 / S-1.8
2. FOR TYPICAL JOINT DETAIL SEE 1 / S-1.8
3. FOR TYPICAL CORNER REINFORCEMENT DETAIL SEE 2 / S-1.8
4. FOR TYPICAL AND ADDITIONAL REINFORCEMENT SEE ELEVATIONS ON THIS SHEET.

IDENTIFICATION STAMP
DIV. OF THE STATE ARCHITECT
APP: 03-122664 INC:
REVIEWED FOR
SS ☑ FLS ☑ ACS ☑
DATE: 05/12/2023

pjhm architects

LICENSED ARCHITECT
RICHARD W. FRIEDMAN
No. C15585
REN. 02/25
STATE OF CALIFORNIA

VCA ENGINEERS, INC.
2151 Michelson Dr. #240
Irvine, CA 92612
Tel. 949.679.0870
Fax. 949.679.9370
Project No.: 1747

PROFESSIONAL ENGINEER
KEUN PARK
No. 54029
Exp. 9/30/24
CIVIL
STATE OF CALIFORNIA

LA Phone: 213.278.0172 • Web: pjhm.com
LA Office: 837 Traction Avenue, #410, Los Angeles, CA 90013
SD Phone: 760.730.5527 • SD Office: 804 Pier View Way #103, Oceanside, CA 92054
OC Phone: 949.496.6191 • OC Office: 24461 Ridge Route Drive #100, Laguna Hills, CA 92653

HIGHLAND HIGH SCHOOL
50M POOL & AQUATICS CENTER

KERN HIGH SCHOOL DISTRICT

CMU WALL ELEVATIONS - BLDG B

S-6.2

4/7/2023 4:26:30 PM

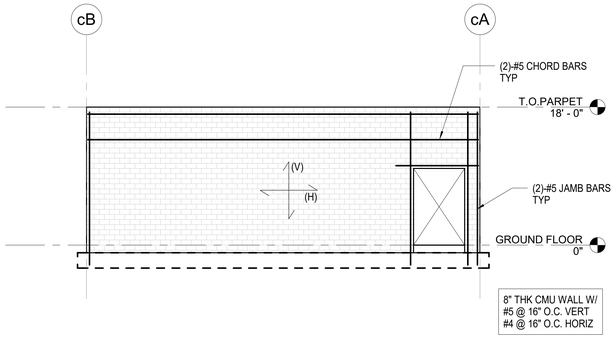

27 S-6.3 CMU WALL ELEVATION @ GL-c3

SCALE : 1/8" = 1'-0"

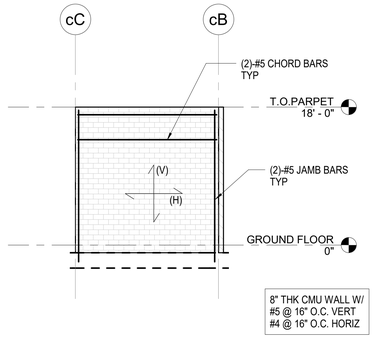

28 S-6.3 CMU WALL ELEVATION @ GL-c2

SCALE : 1/8" = 1'-0"

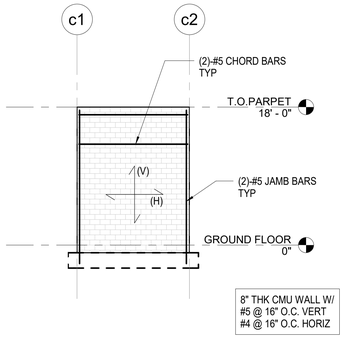

29 S-6.3 CMU WALL ELEVATION @ GL-cC

SCALE : 1/8" = 1'-0"

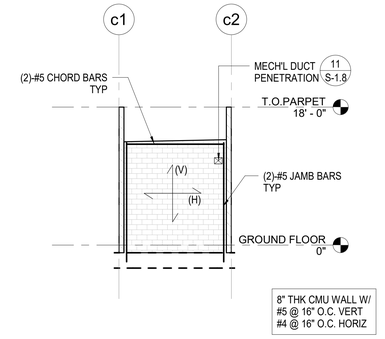

30 S-6.3 CMU WALL ELEVATION

SCALE : 1/8" = 1'-0"

31 S-6.3 CMU WALL ELEVATION @ GL-cB

SCALE : 1/8" = 1'-0"

32 S-6.3 CMU WALL ELEVATION @ GL-c1

SCALE : 1/8" = 1'-0"

33 S-6.3 CMU WALL ELEVATION @ GL-cA

SCALE : 1/8" = 1'-0"

ELEVATION NOTES:

1. FOR TYPICAL REINFORCEMENT DETAIL SEE 7 / S-1.8
2. FOR TYPICAL JOINT DETAIL SEE 1 / S-1.8
3. FOR TYPICAL CORNER REINFORCEMENT DETAIL SEE 2 / S-1.8
4. FOR TYPICAL AND ADDITIONAL REINFORCEMENT SEE ELEVATIONS ON THIS SHEET.

IDENTIFICATION STAMP
DIV. OF THE STATE ARCHITECT
APP: 03-122664 INC:
REVIEWED FOR
SS ☑ FLS ☑ ACS ☑
DATE: 05/12/2023

pjhm architects
LICENSED ARCHITECT RICHARD W. FRIEND No. C15585 REN. 02/25 STATE OF CALIFORNIA
VCA ENGINEERS, INC.
2151 Michelson Dr. #240
Irvine, CA 92612
Tel. 949.679.0870
Fax. 949.679.9370
Project No.: 1747
PROFESSIONAL ENGINEER KEVIN R. PAUL No. 54029 Exp. 9/30/24 STATE OF CALIFORNIA
OC Office: 24461 Ridge Route Drive #100, Laguna Hills, CA 92653 • OC Phone: 949.496.6191 • SD Office: 804 Pier View Way #103, Oceanside, CA 92054 • SD Phone: 760.730.5527 • LA Office: 837 Traction Avenue, #410, Los Angeles, CA 90013 • LA Phone: 213.278.0172 • Web: pjhm.com

HIGHLAND HIGH SCHOOL
50M POOL & AQUATICS CENTER

KERN HIGH SCHOOL DISTRICT

CMU WALL ELEVATIONS - BLDG C

S-6.3

4/7/2023 4:26:32 PM

PLUMBING SYMBOLS AND ABBREVIATIONS

———	SOIL WASTE OR SEWER ABV GRADE	SS OR W
——— ———	WASTE OR SEWER BELOW GRADE	SS OR W
——SD——	STORM DRAIN	S.D
— — — —	SANITARY VENT	V
——— — ———	COLD WATER	C.W.
—— — ——	HOT WATER	H.W.
—— — — — ——	HOT WATER RETURN	H.W.R.
——OD——	OVERFLOW STORM DRAIN	O.D
——GW——	GREASE WASTE	02
——CA——	COMPRESSED AIR LINE	CA
——F——	FILTERED WATER	F
——G——	FUEL GAS (LOW PRESSURE)	G.
——XG——	FUEL GAS (MEDIUM PRESSURE)	XG
——DI——	DEIONIZED WATER	DI
——LV——	LAB VACUUM	LV
	SHUT-OFF VALVE	S.O.V.
	PRESSURE REDUCING VALVE	P.R.V.
	PRESSURE-TEMPERATURE RELIEF VALVE	P-T REL. V.
	CHECK VALVE	C.V.
	SHUT-OFF VALVE IN BOX	
	CLEAN OUT TO GRADE	C.O.T.G.
	WALL CLEANOUT	W.C.O.
	FLOOR CLEANOUT	F.C.O.
	HOSE BIBB	H.B.
	DROP	
	RISE	
	FIRE SPRINKLER HEAD	
	UNION	
G.C./S.O.C.	GAS COCK/SHUT OFF COCK	
BEH.	BEHIND	
V.T.R	VENT THRU ROOF	
	VALVE IN RISER	
F.H.	FIRE HYDRANT	
ABV.	ABOVE	
HDR	HEADER	
BEL.	BELOW	
A.F.F.	ABOVE FINISHED FLOOR	
CLG	CEILING	
DN	DOWN	
F.D.	FLOOR DRAIN	
F.S.	FLOOR SINK	
S.B.	SERVICE BASIN	
S.S.	SERVICE SINK	
U.N.O.	UNLESS NOTED OTHERWISE	
CLG.	CEILING	
A.B.	ACCESS BOX	
A.P.	ACCESS PANEL	
I.E.	INVERT ELEVATION	
L.K.S.	LOOSE KEY STOP	
P.O.C.	POINT OF CONNECTION	
F.G.	FINISHED GRADE	
N.I.C.	NOT IN CONTRACT	
R.I.& C.	ROUGH-IN & CONNECT	
U.O.S.	UNDER OTHER SECTION	
W.H.A.	WATER HAMMER ARRESTER	
G.P.R.	GAS PRESSURE REGULATOR	
R.D./O.D.	ROOF DRAIN/OVERFLOW DRAIN	
GD	GUTTER DRAIN	
TPS	TRAP PRIMER SUPPLY	
ASR	AUTOMATIC FIRE SPRINKLER RISER	
——— GW ———	GREASE WASTE	
——— AW ———	ACID WASTE	
——— AV ———	ACID VENT	
SF	EMERGENCY SHOWER & EYEWASH	
AVTR	ACID VENT THRU ROOF	
	POC	
GHV	GARDEN HOSE VALVE	
DS	DOWNSPOUT	
B.G.	BELOW GRADE	
TMV	THERMOSTATIC MIXING VALVE	

LIST OF APPLICABLE CODES
2022 California Administrative Code (CAC), Part 1, Title 24 CCR
2019 California Building Code (CBC), Part 2, Title 24 CCR
2019 California Electrical Code (CEC), Part 3, Title 24 CCR
2019 California Mechanical Code (CMC), Part 4, Title 24 CCR
2019 California Plumbing Code (CPC), Part 5, Title 24 CCR
2019 California Energy Code, Part 6, Title 24 CCR
2019 California Fire Code (CFC), Part 9, Title 24 CCR
2019 California Existing Building Code (CEBC), Part 10, Title 24 CCR
2019 California Green Building Standards Code (CALGreen), Part 11, Title 24 CCR
2019 California Referenced Standards Code, Part 12, Title 24 CCR
Title 19 CCR, Public Safety, State Fire Marshal Regulations

APPLICABLE STANDARDS
For a list of applicable standards, including California amendments to the NFPA Standards, refer to CBC Chapter 35 and CFC Chapter 80.

GENERAL REQUIREMENTS

1. A. FURNISH ALL LABOR, SUPERVISION, MATERIALS, EQUIPMENT AND FACILITIES NECESSARY TO FURNISH, FABRICATE, DELIVER, STORE AND INSTALL ALL WORK NOTED ON THE DRAWINGS AND/OR SPECIFIED HEREIN.

B. THE CONTRACTOR SHALL FURNISH AND INSTALL ALL WORK NECESSARY TO MAKE A COMPLETE SYSTEM WHETHER OR NOT SUCH DETAILS ARE MENTIONED IN THESE SPECIFICATIONS OR SHOWN ON THE PLANS, BUT WHICH ARE OBVIOUSLY NECESSARY TO MAKE A COMPLETE SYSTEM, EXCEPTING ONLY THOSE PORTIONS THAT ARE SPECIFICALLY MENTIONED HEREIN OR PLAINLY MARKED ON THE ACCOMPANYING DRAWINGS AS BEING INSTALLED UNDER ANOTHER SECTION OF THE SPECIFICATIONS.

2. WORKMANSHIP: THE WORK SHALL BE ACCOMPLISHED IN A THOROUGH AND WORKMAN-LIKE MANNER SATISFACTORY TO AND MEETING THE APPROVAL OF THE OWNER AND ARCHITECT.

3. MATERIALS: ALL MATERIALS AND EQUIPMENT SHALL BE NEW AND THE BEST OF THEIR RESPECTIVE KIND, FREE FROM ALL DEFECTS AND OF THE MAKE AND QUALITY SPECIFIED.

4. SITE INSPECTION: CONTRACTOR SHALL VISIT THE SITE OF WORK PRIOR TO SUBMISSION OF HIS BID AND THOROUGHLY FAMILIARIZE HIMSELF WITH THE WORKING CONDITIONS AND EXACT NATURE OF THE WORK. SUBMISSION OF A BID ACKNOWLEDGES FULL RESPONSIBILITY FOR FURNISHING A COMPLETE AND FUNCTIONAL SYSTEM. NO CHANGES IN CONTRACT WILL BE MADE TO ACCOMMODATE OR ALLOW EXTRA FUNDS FOR ANY OMISSION WHICH RESULTS FROM A FAILURE TO THOROUGHLY MAKE THE EXAMINATION.

5. CODES AND PERMITS: ALL MECHANICAL EQUIPMENT, INSTALLATION, ETC., SHALL CONFORM WITH ALL APPLICABLE CODES AND ORDINANCES AS INTERPRETED BY THE LOCAL AUTHORITY HAVING JURISDICTION, INCLUDING CALIFORNIA TITLE 24.

6. COORDINATION: THE DRAWINGS ARE DIAGRAMMATIC AND INTENDED TO SHOW SCOPE. THE CONTRACTOR SHALL COORDINATE HIS WORK WITH OTHER TRADES TO PROVIDE BEST ARRANGEMENT OF ALL DUCTS, PIPES, CONDUIT, ETC.

7. INSULATION SHALL BE U.L. LISTED IN COMPLIANCE WITH FLAME-SPREAD RATING OF NOT MORE THAN 25 AND SMOKE DENSITY NOT EXCEEDING 50, PER THE CALIFORNIA MECHANICAL CODE. INSTALLATION SHALL BE IN ACCORDANCE WITH THE STATE OF CALIFORNIA ENERGY COMMISSION AND CPC REQUIREMENTS.

8. HORIZONTAL DRAINAGE PIPING SHALL BE RUN AT A UNIFORM SLOPE OF NOT LESS THAN 1/4" PER FOOT TOWARD THE POINT OF DISPOSAL. WHERE APPROVED BY THE LOCAL AUTHORITY OR INDICATED ON DRAWINGS, DRAINAGE PIPING 4 INCHES, OR LARGER, MAY BE RUN AT A UNIFORM SLOPE OF 1/8INCHES PER FOOT. ALL PIPING UNDER BUILDINGS SHALL BE SLOPED AT ¼ INCHES PER FOOT.

9. ALL FLOOR SINKS SHALL BE FLUSHED TO THE FLOOR. ALL LINES DRAINING TO THE FLOOR SINK SHALL SLOPE A MINIMUM OF 1/4" PER FOOT AND SHALL TERMINATE AT LEAST ONE INCH ABOVE THE RIM OF THE FLOOR SINK. ALL FLOOR SINKS AND FLOOR DRAINS SHALL BE PROVIDED WITH TRAP PRIMERS.

10. EACH PLUMBING VENT SHALL TERMINATE NOT LESS THAN TEN FEET FROM OR AT LEAST THREE FEET ABOVE ANY OPENABLE WINDOW, DOOR, OPENING, AIR INTAKE OR VENT SHAFT, AND SHALL TERMINATE NOT LESS THAN 6INCHES ABOVE THE ROOF OR 1 FOOT FROM ANY VERTICAL SURFACE.

11. CLEAN-OUTS SHALL BE INSTALLED AS PER CPC REQUIREMENTS.

12. PROTECT ROOF RECEPTORS FROM RAIN WATER BY ELEVATING THE RIM 2 INCHES ABOVE THE ROOF SURFACE.

13. COORDINATE LOCATIONS OF ALL ROOF/WALL OPENINGS WITH ALL RELEVANT TRADES AND PROVIDE WATERTIGHT FLASHINGS WHEREVER PENETRATIONS OCCUR. EXACT LOCATIONS AND SIZES MAY BE DEPENDENT UPON EQUIPMENT SELECTIONS; COORDINATE SIZES AND LOCATIONS OF ALL OPENINGS WITH APPROPRIATE EQUIPMENT REQUIREMENTS.

14. PENETRATIONS: PENETRATIONS IN WALLS REQUIRING PROTECTED OPENINGS SHALL BE FIRE-STOPPED. FIRE-STOPPING SHALL BE AN APPROVED MATERIAL SECURELY INSTALLED AND CAPABLE OF MAINTAINING ITS INTEGRITY WHEN SUBJECTED TO TEST TEMPERATURE PRESCRIBED IN THE C.B.C. FOR SPECIFIC WALL OR PARTITION TYPE.

15. PROVIDE FELT WITH METAL BACKING VIBRATION ISOLATION SLEEVES OR PADS AT ALL PIPE HANGERS OR SUPPORTS AND ALL POINTS WHERE PIPING COMES IN CONTACT WITH ANY PORTION OF THE STRUCTURE.

16. ROUGH-IN AND CONNECT EQUIPMENT PROVIDED UNDER OTHER SECTIONS OF THE WORK.

17. WATER HEATING SYSTEMS AND EQUIPMENT SHALL MEET OR EXCEED ALL APPLICABLE EFFICIENCY REQUIREMENTS AS INDICATED IN THE CALIFORNIA ENERGY COMMISSION.

18. HOT WATER CIRCULATING PUMPS SHALL HAVE A CONTROL CAPABLE OF AUTOMATICALLY TURNING OFF WHEN HOT WATER IS NOT REQUIRED.

19. GAS-FIRED EQUIPMENT SHALL BE EQUIPPED WITH A PILOTLESS ELECTRONIC INTERMITTENT IGNITION SYSTEM. GAS FIRED BOILER AND GAS FIRED AC UNITS SHALL MEET ALL SCAQMD LO-NOX REQUIREMENTS.

20. LAVATORIES IN RESTROOMS OF PUBLIC FACILITIES SHALL BE EQUIPPED WITH OUTLET DEVICES THAT LIMIT THE FLOW OF HOT WATER TO A MAXIMUM OF 0.5 GALLONS PER MINUTE AND WITH CONTROLS TO LIMIT THE OUTLET TEMPERATURE TO 110°F.

21. ALL EQUIPMENT SHALL BE SECURELY FASTENED TO THE BUILDING STRUCTURE.

22. INSULATION SHALL BE PROVIDED ON ALL HOT WATER LINES AND P-TRAPS SERVING HANDICAPPED LAVATORIES AND SINKS WITH HOT WATER SERVICE.

23. ALL ROOF OVERFLOW DRAINS SHALL SPILL BELOW SOFFIT ABOVE COVERED WALKWAY AREA WHERE POSSIBLY. DRAINS WHICH CANNOT SPILL TO SOFFIT AND ARE RUN DOWN IN EXTERIOR WALL SHALL TERMINATE MIN 9"/MAX 12" ABOVE GRADE.

24. CONTRACTOR TO COORDINATE ROOF DRAIN OUTLET INVERT ELEVATIONS WITH CIVIL STORM DRAIN PIPING STUBBED TO BUILDING, AND MAKE FINAL CONNECTION AS REQUIRED.

Applicable Code: 2019 CBC 02-25-2020 Revised: 02/14/2020

All mechanical, plumbing, and electrical components shall be anchored and installed per the details on the DSA approved construction documents. Where no detail is indicated, the following components shall be anchored or braced to meet the force and displacement requirements prescribed in the 2019 CBC Sections 1617A.1.18 through 1617A.1.26 and ASCE 7-16 Chapter 13, 26 and 30.

1. All permanent equipment and components.
2. Temporary, movable or mobile equipment that is permanently attached (e.g. hard wired) to the building utility services such as electricity, gas or water. "Permanently attached" shall include all electrical connections except plugs for 110/220 volt receptacles having a flexible cable.
3. Temporary, movable or mobile equipment which is heavier than 400 pounds or has a center of mass located 4 feet or more above the adjacent floor or roof level that directly support the component is required to be restrained in a manner approved by DSA.

The following mechanical and electrical components shall be positively attached to the structure but need not demonstrate design compliance with the references noted above. These components shall have flexible connections provided between the component and associated ductwork, piping, and conduit. Flexible connections must allow movement in both transverse and longitudinal directions:

A. Components weighing less than 400 pounds and have a center of mass located 4 feet or less above the adjacent floor or roof level that directly support the component.

B. Components weighing less than 20 pounds, or in the case of distributed systems, less than 5 pounds per foot, which are suspended from a roof or floor or hung from a wall.

The anchorage of all mechanical, electrical and plumbing components shall be subject to the approval of the design professional in general responsible charge or structural engineer delegated responsibility and acceptance by DSA. The project inspector will verify that all components and equipment have been anchored in accordance with the above requirements.

Piping, Ductwork, and Electrical Distribution System Bracing Note

Piping, ductwork, and electrical distribution systems shall be braced to comply with the forces and displacements prescribed in ASCE 7-16 Section 13.3. as defined in ASCE 7-16 Section 13.6.5.6, 13.6.7, 13.6.8; and 2019 CBC, Sections 1617A.1.24, 1617A.1.25 and 1617A.1.26.

The method of showing bracing and attachments to the structure for the identified distribution system are as noted below. When bracing and attachments are based on a preapproved installation guide (e.g., OSHPD OPM for 2013 CBC or later), copies of the bracing system installation guide or manual shall be available on the jobsite prior to the start of and during the hanging and bracing of the distribution systems. The Structural Engineer of Record shall verify the adequacy of the structure to support the hanger and brace loads.

Mechanical Piping (MP), Mechanical Ducts (MD), Plumbing Piping (PP), Electrical Distribution Systems (E):

MP☐ MD☐ PP☒ E☐ - Option 1 : Detailed on the approved drawings with project specific notes and details.

MP☐ MD☐ PP☐ E☐ - Option 2 : Shall comply with the applicable OSHPD Pre-Approval (OPM#) #_____.

STANDARD PLUMBING FIXTURE MOUNTING HEIGHTS

SYMBOL	DESCRIPTION	INSTALLATION HEIGHT				REMARKS
		KIND	ELEM.	ADULT	MOUNTING HEIGHT	
WC	WATER CLOSET	10"	15"	15"	TOP OF SEAT	-
UR	URINAL	-	17"	24"	TOP OF LIP	-

(a) ABOVE FINISHED FLOOR; DUAL HEIGHT ASSEMBLY.

PLUMBING FIXTURE CONNECTION SCHEDULE

SYMBOL	DESCRIPTION	CONNECTION SIZE					REMARKS
		TRAP	W	V	CW	HW	
WC -	F.V. WATER CLOSET	INTEGRAL	4"	2"(a)	1"	-	FLUSH VALVE HANDLE TO BE ON WIDE SIDE OF WATER CLOSET
UR -	URINAL	INTEGRAL	2"	1 1/2"(a)	3/4"	-	FLUSH VALVE HANDLE
LV -	LAVATORY	(b)	2"	1-1/2"	1/2"	1/2"	COLD WATER ONLY FOR STUDENTS
SB -	SERVICE BASIN	3" (a)	3"(a)	2" (a)	3/4"	3/4"	
SH -	SHOWER	(b)	2"	1-1/2"	3/4"	3/4"(c) (d)	
DF -	DRINKING FOUNTAIN	(b)	2"	1-1/2"	1/2"		
SK -	SINK	1 1/2"(a)	2"	1-1/2"	3/4"	3/4"(c) (d)	
FD -	FLOOR DRAIN	2",3"	2",3"	1-1/2" / 2"	-	-	WITH TRAP PRIMER CONNECTION, EXCEPT SHOWER DRAIN, SEE PLANS FOR SIZES
FS -	FLOOR SINK	2"	2"	1-1/2"	-		WITH TRAP PRIMER CONNECTION

(a) UNLESS OTHERWISE INDICATED ON THE DRAWINGS
(b) 1-1/4"x 1-1/2"
(c) WHERE APPLICABLE
(d) HOT WATER OR TEMPERED WATER AS APPLICABLE

ACCESSIBLE PLUMBING FIXTURE MOUNTING HEIGHTS

SYMBOL	DESCRIPTION	MOUNTING HEIGHT	T-24 REQUIREMENTS
WC CH	WATER CLOSET (WALL MOUNTED) HS STUDENTS	17"-19" TO TOP OF SEAT	FLUSH VALVE HANDLE TO BE ON WIDE SIDE OF WATER CLOSET
UR CH	URINAL HS STUDENTS	17" TO TOP LIP; 17" MAX	FLUSH VALVE HANDLE TO BE ON WIDE SIDE OF URINAL
SH CH	SHOWER HS STUDENTS	40" TO TOP OF MIXING VALVE, 48" TO TOP OF HAND SHOWER	MINIMUM 60□ ADA COMPLIANT SHOWER HOSE
LV CH	LAVATORIES HS STUDENTS	34" TO TOP RIM	27" MIN. TO UNDERSIDE OF BOWL. WITH HOT & COLD WATER 10 SEC. MIN. OPERATION OF SELF-CLOSING FAUCETS
LV DH	LAVATORIES	34" TO TOP RIM	27" MIN. TO UNDERSIDE OF BOWL. WITH HOT & COLD WATER 10 SEC. MIN. OPERATION OF SELF-CLOSING FAUCETS
DF CH	DRINKING FOUNTAINS HS STUDENTS	36" TO BUBBLER OUTLET; 36" MAX.	WALL TYPE, BOTTLE FILLER, DUAL HEIGHT
SK DH	DOUBLE SINK HS STUDENTS		

GAS WATER HEATER & PUMPS

ITEM NO.	DESCRIPTION	MANUFACTUERER	MODEL	COMMENTS
CP-1	CIRCULATING PUMP	B & G	SERIES PR	BRONZE PUMP, 120V, 1 PH, 1/6 HP
CP-2	CIRCULATING PUMP	B & G	SERIES PR	BRONZE PUMP, 120V, 1 PH, 1/6 HP
EWH-1	INSTA-HOT	CHRONOMITE	SR-30	POWER REQ: 208V, 1 PH, 60 HZ., 9 KW.
WH-1	DOMESTIC WATER HEATER	A. O. SMITH	BTH-120	CONN. 1 1/4" H & CW & 1"G W/SOC TO WATER HEATER, 60 GALLON STORAGE, 120 CFH,OPERATING WEIGHT: 1000 LBS. 3"PVC INTAKE & EXHAUST THRU ROOF
WH-2	DOMESTIC WATER HEATER	A. O. SMITH	BTH-120	CONN. 1 1/4" H & CW & 1"G W/SOC TO WATER HEATER, 60 GALLON STORAGE, 120 CFH,OPERATING WEIGHT: 1000 LBS. 3"PVC INTAKE & EXHAUST THRU ROOF
WH-3	DOMESTIC WATER HEATER	A. O. SMITH	BTH-120	CONN. 1 1/4" H & CW & 1"G W/SOC TO WATER HEATER, 60 GALLON STORAGE, 120 CFH,OPERATING WEIGHT: 1000 LBS. 3"PVC INTAKE & EXHAUST THRU ROOF

IDENTIFICATION STAMP
DIV. OF THE STATE ARCHITECT
APP: 03-122664 INC:
REVIEWED FOR
SS ☑ FLS ☑ ACS ☑
DATE: 05/12/2023

pjhm architects
LICENSED ARCHITECT RODNEY W. PJHM NO. C15585 REN. 02/25 STATE OF CALIFORNIA
Engineous Group, Inc. 898 N. Fair Oaks Ave., Suite E Pasadena, CA 91103 Phone: (626) 696-3550
PROFESSIONAL ENGINEER DUSTY L. [illegible] No. 27963 Exp. 6/30/24 MECHANICAL STATE OF CALIFORNIA
LA Phone: 213.278.0172 • Web: pjhm.com
LA Office: 837 Traction Avenue, #410, Los Angeles, CA 90013
SD Phone: 760.730.5527 • SD Office: 804 Pier View Way #103, Oceanside, CA 92054
OC Phone: 949.496.6191 • OC Office: 24461 Ridge Route Drive #100, Laguna Hills, CA 92653

HIGHLAND HIGH SCHOOL
50M POOL & AQUATICS CENTER

KERN HIGH SCHOOL DISTRICT

PLUMBING FRONT SHEET

STATE OF CALIFORNIA
Domestic Water Heating System
NRCC-PLB-E (Created 11/19) CALIFORNIA ENERGY COMMISSION

CERTIFICATE OF COMPLIANCE		NRCC-PLB-E
Project Name: HIGHLAND HIGH SCHOOL 50M POOL & AQUATICS CENTER	Report Page:	Page 4 of 6
Project Address: 2900 ROYAL SCOTTS WAY, BAKERSFIELD, CA 93306	Date Prepared:	10/21/2022

Table Continued

01	☑	☐	☐	Construction documents require manufacturer certification that service water-heating systems are equipped with automatic temperature controls capable of adjusting temperature settings per §110.3(c)i
02	☑	☐	☐	Systems with capacity > 167,000 BTU/H equipped with outlet temperature controls per §110.3(c)1 unless covered by California Plumbing Code Section 613.0.
03	☑	☐	☐	Controls for circulating pumps or electrical heat trace systems are capable of automatically turning off the system per §110.3(c)2 unless system serves healthcare facility.
04	☐	☐	☑	For recirculation systems serving multiple dwelling units, design includes automatic pump controls per §150.1(c)8Biv, or §150.2 for additions or alterations
05	☐	☐	☑	For recirculation systems serving individual dwelling units, design includes manual on/off controls as specified in Reference Appendix RA 4.4.9 per §150.0(n)9.
06	☐	☐	☑	For replacement single heat pump water heaters serving individual dwelling units in climate zones 1-15, design includes communication interface that meets demand responsive control requirements of §110.12(a) per §150.2(b)1Bii.

I. DECLARATION OF REQUIRED CERTIFICATES OF INSTALLATION

Table Instructions: Selections have been made based on information provided in previous tables of this document. If any selection needs to be changed, please explain why in Table E. Additional Remarks. These documents must be provided to the building inspector during construction and can be found online at https://www.energy.ca.gov/title24/2019standards/2019_compliance_documents/Nonresidential_Documents/NRCa/

YES	NO	Form/Title	Field Inspector Pass	Field Inspector Fail
☑		NRCI-PLB-03-E - Must be submitted for all buildings	☐	☐
☐	☑	NRCI-PLB-02-E - Must be submitted for high-rise residential and hotel/ motel central hot water distribution systems to be recognized for compliance.	☐	☐
☐	☑	NRCI-PLB-03-E - Must be submitted for high-rise residential and hotel/ motel single dwelling unit hot water distribution systems to be recognized for compliance.	☐	☐

J. DECLARATION OF REQUIRED CERTIFICATES OF ACCEPTANCE

There are no Certificates of Acceptance applicable to service water heating requirements.

STATE OF CALIFORNIA
Domestic Water Heating System
NRCC-PLB-E (Created 11/19) CALIFORNIA ENERGY COMMISSION

CERTIFICATE OF COMPLIANCE		NRCC-PLB-E
Project Name: HIGHLAND HIGH SCHOOL 50M POOL & AQUATICS CENTER	Report Page:	Page 1 of 6
Project Address: 2900 ROYAL SCOTTS WAY, BAKERSFIELD, CA 93306	Date Prepared:	10/21/2022

This document is used to demonstrate compliance for nonresidential occupancies with requirements in §110.1, §120.3, §120.5 and §140.5, and with requirements in §141.0 for additions and alterations, for domestic water heating scopes using the prescriptive path. For high-rise residential and hotel/motel occupancies, compliance is demonstrated with requirements in §150.1, §150.3, §150.5, §150.0 and §150.1(c)8, and with requirements in §150.2 for additions and alterations.

A. GENERAL INFORMATION

01	Project Location (city)	02 Climate Zone	
	BAKERSFIELD		
03	Occupancy Types Within Project (select all that apply):		
☑ Nonresidential	☐ High-Rise Residential	☐ Hotel/ Motel	
☐ State Building	☐ Healthcare Facility	☐ Other (Write In):	

B. PROJECT SCOPE

Table Instructions: Include any domestic water heating systems that are within the scope of the permit application and are demonstrating compliance using the prescriptive paths outlined in §140.5, §150.1(c)8, and §141.0(b) or §141.0(b)2B for additions or alterations. Solar water heating systems should be documented on the NRCC-SRA compliance document. Combined hydronic water heating systems should be documented on the NRCC-MCH compliance document.

01	02	03	04
My project consists of (check all that apply):	System Type[1,2]	System Components	
☑ New System (DHW system being installed for the first time in newly constructed building)	Central System (serving nonresidential spaces)	☑ Equipment ☑ Distribution ☑ Controls	
☐ System Alteration (equipment, distribution or controls)		☐ Equipment ☐ Distribution ☐ Controls	

[1] FOOTNOTE: Point of use water heaters, or other non-central systems used to serve nonresidential spaces, are considered individual systems.
[2] Dwelling units refers to hotel/ motel guest rooms and units in a high-rise residential occupancy.

C. COMPLIANCE RESULTS

Table Instructions: Table C will indicate if the project data input into the compliance document is compliant with water heating requirements. This table is not editable by the user. If this table says "DOES NOT COMPLY" or "COMPLIES with Exceptional Conditions" refer to Table D., or the table indicated as not compliant for guidance.

01	02	03	04
Domestic Hot Water Equipment	Distribution Systems	Controls	**Compliance Results**
(See Table F)	(See Table G)	(See Table H)	
Yes	Yes	Yes	**COMPLIES**

STATE OF CALIFORNIA
Domestic Water Heating System
NRCC-PLB-E (Created 11/19) CALIFORNIA ENERGY COMMISSION

CERTIFICATE OF COMPLIANCE		NRCC-PLB-E
Project Name: HIGHLAND HIGH SCHOOL 50M POOL & AQUATICS CENTER	Report Page:	Page 5 of 6
Project Address: 2900 ROYAL SCOTTS WAY, BAKERSFIELD, CA 93306	Date Prepared:	10/21/2022

K. DECLARATION OF REQUIRED CERTIFICATES OF VERIFICATION

Table Instructions: Selections have been made based on information provided in previous tables of this document. If any selection needs to be changed, please explain why in Table E. Additional Remarks. These documents must be completed by a HERS Rater and provided to the building inspector during construction. The final documents must be created by a HERS Providers registry, but drafts can be found online at https://www.energy.ca.gov/title24/2019standards/2019_compliance_documents/Nonresidential_Documents/NRCV/

YES	NO	Form/Title	Field Inspector Pass	Field Inspector Fail
☐	☑	NRCV-PLB-21-H High-rise Residential Central Hot Water Distribution HERS Verification	☐	☐
☐	☑	NRCV-PLB-22-H High-rise Residential Individual Dwelling Unit Hot Water Distribution HERS Verification	☐	☐

STATE OF CALIFORNIA
Domestic Water Heating System
NRCC-PLB-E (Created 11/19) CALIFORNIA ENERGY COMMISSION

CERTIFICATE OF COMPLIANCE		NRCC-PLB-E
Project Name: HIGHLAND HIGH SCHOOL 50M POOL & AQUATICS CENTER	Report Page:	Page 6 of 6
Project Address: 2900 ROYAL SCOTTS WAY, BAKERSFIELD, CA 93306	Date Prepared:	10/21/2022

DOCUMENTATION AUTHOR'S DECLARATION STATEMENT

I certify that this Certificate of Compliance documentation is accurate and complete

Documentation Author Name:	Bradley Severson	Documentation Author Signature:	
Company:	Engineous Group, Inc.	Signature Date:	2022-10-21
Address:	898 N. Fair Oaks, Suite E	CEA/ HERS Certification Identification (if applicable):	
City/State/Zip:	Pasadena/CA/91103	Phone:	626 696 3850

RESPONSIBLE PERSON'S DECLARATION STATEMENT

I certify the following under penalty of perjury, under the laws of the State of California:

1. **The information provided on this Certificate of Compliance is true and correct.**
2. **I am eligible under Division 3 of the Business and Professions Code to accept responsibility for the building design or system design identified on this Certificate of Compliance (responsible designer)**
3. **The energy features and performance specifications, materials, components, and manufactured devices for the building design or system design identified on this Certificate of Compliance conform to the requirements of Title 24, Part 1 and Part 6 of the California Code of Regulations.**
4. **The building design features or system design features identified on this Certificate of Compliance are consistent with the information provided on other applicable compliance documents, worksheets, calculations, plans and specifications submitted to the enforcement agency for approval with this building permit application.**
5. **I will ensure that a completed signed copy of this Certificate of Compliance shall be made available with the building permit(s) issued for the building, and made available to the enforcement agency for all applicable inspections. I understand that a completed signed copy of this Certificate of Compliance is required to be included with the documentation the builder provides to the building owner at occupancy.**

Responsible Designer Name:	Bradley Severson	Responsible Designer Signature:	
Company :	Engineous Group, Inc.	Date Signed:	2022-10-21
Address:	898 N. Fair Oaks, Suite E	License:	M27963
City/State/Zip:	Pasadena/CA/91103	Phone:	626 696 3850

STATE OF CALIFORNIA
Domestic Water Heating System
NRCC-PLB-E (Created 11/19) CALIFORNIA ENERGY COMMISSION

CERTIFICATE OF COMPLIANCE		NRCC-PLB-E
Project Name: HIGHLAND HIGH SCHOOL 50M POOL & AQUATICS CENTER	Report Page:	Page 3 of 6
Project Address: 2900 ROYAL SCOTTS WAY, BAKERSFIELD, CA 93306	Date Prepared:	10/21/2022

D. EXCEPTIONAL CONDITIONS

This table is auto-filled with unedittable comments because of selections made or data entered in tables throughout the form.

No exceptional conditions apply to this project.

E. ADDITIONAL REMARKS

This table includes remarks made by the permit applicant to the Authority Having Jurisdiction.

F. DOMESTIC HOT WATER EQUIPMENT

Table Instructions: Complete the following table to demonstrate compliance with mandatory equipment requirements in §120.1 and §110.3. For high-rise residential and hotel/ motel occupancies, compliance with prescriptive requirements in §150.1(c)8 must also be demonstrated and with §150.2 for addition and alteration scopes.

Equipment Schedule: Central Systems

07	08	09	10	11	12	13	14	15
Name or Item Tag	Equipment Type	Volume (gal)	Rated Input Capacity (Btu/h)	Rated Efficiency	Minimum Efficiency Required	Efficiency Unit	Designed Standby Loss[1]	Maximum Standby Loss[1]
WH-1	Gas Storage Water Heater	69	120,000	96	80	%	1,196	3,945

[1] FOOTNOTE: For gas water heaters/ boilers, standby loss is in BTUH. For electric storage water heaters, standby loss is in %/hr.

Water Heating Equipment All Occupancies

	Yes	No	Not Applicable	Requirement
18	☐	☐	☑	Unfired storage tank insulation shall have Internal + External ≥ R-16 OR External ≥ R-12. Label required per §110.3(c)3
19	☐	☐	☑	New state buildings 60% of energy for service water heating from site solar energy or recovered energy per §110.3(c)5
20	☐	☐	☑	Isolation valves for instantaneous water heater with input rating > 6.8 kBTUH or 2 kW has been specified per §110.3(c)6

G. DOMESTIC HOT WATER DISTRIBUTION SYSTEM

Table Instructions: Complete the following table to demonstrate compliance for nonresidential occupancies with distribution requirements in §120.3 and §140.5. For high-rise residential and hotel/motel occupancies, compliance is demonstrated with requirements in §110.3(c), §120.3, §150.0, §150.1

Recirculation Loops in Central Systems Serving Dwelling Units or Nonresidential Spaces

Table Continued

STATE OF CALIFORNIA
Domestic Water Heating System
NRCC-PLB-E (Created 11/19) CALIFORNIA ENERGY COMMISSION

CERTIFICATE OF COMPLIANCE		NRCC-PLB-E
Project Name: HIGHLAND HIGH SCHOOL 50M POOL & AQUATICS CENTER	Report Page:	Page 5 of 6
Project Address: 2900 ROYAL SCOTTS WAY, BAKERSFIELD, CA 93306	Date Prepared:	10/21/2022

Table Continued

	Yes	No	Not Applicable	Requirement
01	☑	☐	☐	*Air release valve or vertical pump installation per §110.3(c)4A*
02	☑	☐	☐	Check valve or similar located between recirculation pump and water heating equipment to prevent backflow per §110.3(c)4B
03	☑	☐	☐	Hose bibb installed between pump and equipment and isolation valve between hose bibb and equipment per §110.3(c)4C
04	☑	☐	☐	Isolation valves on both sides of the pump per §110.3(c)4D
05	☑	☐	☐	Cold water and recirculation loop piping shall not be connected to the hot water storage tank drain port per §110.3(c)4E
06	☑	☐	☐	Check valve installed on cold water supply between hot water system and next closest tee on cold water supply per §110.3(c)4F
07	☐	☐	☑	For central systems serving multiple dwelling units, design includes two or more recirculation loops serving separate dwelling units per §150.1(c)8Bi unless building has ≤ 8 dwelling units.

Mandatory Pipe Insulation All Occupancies

12	☑	For systems serving nonresidential spaces, pipe insulation for the following applications is specified to comply with Table 120.3-A (see below) per §120.3: - Recirculating system piping, including supply and returns piping of the water heater - The first 8 ft of hot and cold outlet piping for a nonrecirculating storage system - Pipes that are externally heated
13	☑	Insulation shall be protected from damage, including that due to sunlight, moisture, equipment maintenance, and wind. Insulation exposed to weather shall be installed with a cover suitable for outdoor service per §110.3(b) and §150.0(t)3

TABLE 120.3-A PIPE INSULATION THICKNESS

Fluid Temperature Range (°F)	Conductivity Range (Btu-in per hour per ft² per °F)	Insulation Mean Rating Temp (°F)	Nominal Pipe Diameter (in)		
			<1	1 to < 1.5	1.5 to < 4
			Minimum Insulation Required		
105-140	0.22-0.28	100	**1.0 in or R-7.7**	**1.5 in or R-12.5**	**1.5 in or R-11**

H. DOMESTIC HOT WATER SYSTEM CONTROLS

Table Instructions: Complete the following table to demonstrate compliance with controls requirements in §110.3 for all occupancies. For high-rise residential and hotel/motel occupancies, compliance is demonstrated with requirements in §150.1(c)8.

	Yes	No	Not Applicable	Requirement

Table Continued

PLUMBING FIXTURE SCHEDULE

ITEM NO.	SUFFIX	DESCRIPTION	MANUFACTURER	MODEL	COMMENTS
3"OD	A1	OVERFLOW DRAIN	JR SMITH	1080-Y-CRU	CAST IRON, COMPLETE WITH CAST IRON FLASHING CLAMP, CAST IRON DOME STRAINER, EXTENSION AND SUMP RECEIVER AND 2" EXTERNAL WATER DAM WITH ZURN NOZZLE #199
3"RD	A1	ROOF DRAIN	JR SMITH	1010-Y-CRU	CAST IRON, COMPLETE WITH CAST IRON FLASHING CLAMP, CAST IRON DOME STRAINER, EXTENSION AND SUMP RECEIVER.
BF	A1	2 1/2" SIZE, REDUCED PRESSURE TYPE, COMPLETE WITH BALL VALVES, TEST COCKS AND DRAIN.	WATTS	957BFG	2 1/2" REDUCED PRESSURE BACKFLOW PREVENTOR
DF	CH	NON-COOLED	HALSEY TAYLOR	HTHBWF-HRFSEBP-I	ROUGH-IN: 2"W, 2"V, 1 1/4"P-TRAP, 3/4"CW. DUAL HEIGHT, SATIN STAINLESS STEEL AND BACKPLATE AND WATER BOTTLE FILLER
FD	A1	2"FLOOR DRAIN	JR SMITH	2005-AHP05NB	ROUGH-IN: 2"W, 2"PTRAP & 2"V, ROUGH-IN CONN'S: 2"SS, 2"V & 3/4"CW, WITH TRAP PRIMER CONNECTION. TRAP PRIMER MAY BE PROVIDED BY A FLUSH VALVE ATTACHMENT OR A "PPP" PR-500 RECESSED IN WALL BEHIND ACCESS PANEL WITH A 1/2" BALL VALVE PRECEEDING THE TRAP PRIMER, BOTH BEHIND ONE ACCESS PANEL.
FD	A2	2"SHOWER FLOOR DRAIN	JR SMITH	2005-AHP05NB	ROUGH-IN CONN'S: 2"SS, 2"V & 3/4"CW W/3"PTRAP, WITH NO TRAP PRIMER CONNECTION.
FD	A3	3"FLOOR DRAIN	JR SMITH	2005-AHP05NB	ROUGH-IN CONN'S: 2"CWV, 3"PTRAP & PROVIDE TRAP PRIMER CONNECTION AND TRANSITION TO 4"CWV.
FD	A4	SHOWER 2"FLOOR DRAIN	JR SMITH	2005-AHP05NB	ROUGH-IN CONN'S: 2"CWV, 3"PTRAP & WITHOUT TRAP PRIMER CONNECTION AND CONNECT TO 4"CWV MAIN LINE
FD	A5	FLOOR DRAIN	JR SMITH	3430-Y-C-10	ROUGH-IN: 6"W & 6"V, 6"PTRAP, 3/4 GRATE AND BEEHIVE STRAINER W/1/2"TRAP PRIMER CONNECTION
FSP	A1	6"FIRE HUB DRAIN	--	--	PROVIDE 6"HUB DRAIN WITH 4"W & 4"PTRAP WITH 2"V & 1/2"PL CONNECTION
FS	A1	FLOOR SINK	JR SMITH	3430-Y-C-10	ROUGH-IN: 2"W & 2"V, 2"PTRAP, 3/4 GRATE AND BEEHIVE STRAINER W/1/2"TRAP PRIMER CONNECTION
FS	A2	FLOOR SINK	JR SMITH	3430-Y-C-10	ROUGH-IN: 3"CWV & 4"PTRAP, 3/4 GRATE AND BEEHIVE STRAINER WITH EXPOSED TRAP PRIMER WITH SOV
GPR	A1	GAS PRESSURE REGULATOR	PIETRO FIORENTINI	30051 DC 1/2"	GAS PRESSURE REGULATOR - 175 CFH @ 50 FEET, 3/4"MPG W/SOC INLET, & 1"G OUTLET W/SOC, BLACK SPRING, 8"WC
GPR	A2	GAS PRESSURE REGULATOR	PIETRO FIORENTINI	30053 DC 1 1/4"	GAS PRESSURE REGULATOR - 4500 CFH @ 50 FEET, 3/4"MPG W/SOC INLET, & 1"G OUTLET W/SOC, BLACK SPRING, 8"WC
LV	DH	LAVATORY .5 GPM	AMERICAN STANDARD	0356.012	ROUGH-INS: 2"W, 2"V, 1 1/4"P-TRAP, 3/4"HW & CW,VITREOUS CHINA WALL HUNG, SIZE 20" X 18", CONCEALED ARMS, WHITE. CHICAGO FAUCET 802-VE2805-665ABCP, "MVP" TWO PUSH BUTTON METERED FAUCET , 4"CENTER, 4"SPOUT. CHICAGO 1013 ANGLESTOPS WITH STAINLESS STEEL BRAIDED SUPPLIES, 17 GAUGE TUBULAR P-TRAP, AND SUPPLY COVERS & ZURN INSULATED GUARD FOR SUPPLIES.
LV	D1	LAVATORY .5 GPM	AMERICAN STANDARD	0356.012	ROUGH-INS: 2"W, 2"V, 1 1/4"P-TRAP, 3/4"HW & CW,VITREOUS CHINA WALL HUNG, SIZE 20" X 18", CONCEALED ARMS, WHITE. CHICAGO FAUCET 802-VE2805-665ABCP, "MVP" TWO PUSH BUTTON METERED FAUCET , 4"CENTER, 4"SPOUT. CHICAGO 1013 ANGLESTOPS WITH STAINLESS STEEL BRAIDED SUPPLIES, 17 GAUGE TUBULAR P-TRAP, AND SUPPLY COVERS & ZURN INSULATED GUARD FOR SUPPLIES.
RHB	A1	STAINLESS STEEL RECESSED HOSEBIBB	ACORN	8151	3/4"CW RECESSED HOSE BIBB WITH VACUUM BREAKER AND STAINLESS STEEL COVER
SB	A1	MOPSINK	AMERICAN STANDARD	7740.020	ROUGH-IN CONN: 3"W, 3"PTRAP, 2"V & 3/4"HW & CW, ACID RESISTING ENAMELED CAST IRON CORNER MODEL FLOOR MOUNTED MOP SINK WITH CURVED FRONT. 7721.038 PERFORATED GRID STRAINER FOR 3-INCH CONNECTION. CHICAGO FAUCET MODEL NO. 897-CCP EXPOSED SUPPLY FITTING WITH INTEGRAL SCREWDRIVER STOPS IN SHANKS, VACUUM BREAKER, 4 FEET OF RUBBER HOSE, ADJUSTABLE FLANGES AND WALL NOOK 7745.011 REMOVABLE COATED RIM GUARD.
SH	C1	SHOWER	ACORN	111-W-F-BS-G	ROUGH-INS: 3/4"HW & CW, HIGH WALL IN-LINE SHOWER UNIT: ACORN 111-W-F-BS-G "ACME" SERIES VANDALPROOF ASSEMBLY WITH 14" HIGH 14 GAUGE TYPE 304 NO. 4 FINISH STAINLESS STEEL TOTALLY ENCLOSED HOUSING. TYUPE 304 STAINLESS STEEL INTERNAL SOAP TANK, "FLO-CLOZ" DOUBLE VALVES WITH INDIVIDUAL STOPS, FLANGELESS ADJUSTABLE SHOWER HEADS WITH 1.6 G.P.M. FLOW CONTROL FRONT MOUNTED LIQUID SOAP DISPENSERS AND VANDALPROOF STAINLESS STEEL SCREWS. NUMBER OF SHOWER STATIONS SHALL BE AS INDICATED ON THE DRAWINGS.
SH	CH	SHOWER ACCESSIBLE	ACORN	536-ADA-FH-F-H-HL-MSH-Y-LVR-PBH	ROUGH-INS: 3/4"TW, HIGH WALL INDIVIDUAL SHOWER UNIT: ACORN 536-ADA-FH-F-H-HL-MSH-Y-LVR-PBH "ZENITH" SERIES VANDALPROOF ASSEMBLY WITH SINGLE TEMPERATURE AIR CONTROL METERING VALVE ACCESSIBLE PUSH BUTTON WITH SINGLE STOPS. 1.6 GPM FLOW CONTROL FIXED SHOWERHEAD, LEVER HANDLE DIVERTER VALVE, SUPPLY ELBOW WITH ELEVATED VACUUM BREAKER, FIXED HEAD AT 48" AFF, 60"SHOWER HOSE, AND VANDALPROOF STAINLESS STEEL SCREWS. ASSEMBLY SHALL COMPLY WITH THE A.D.A./C.B.C. REQUIREMENTS FOR FIXTURES SERVING PERSONS WITH DISABILITIES. GRAB BARS AND FOLDING SEAT WILL BE FURNISHED AND INSTALLED UNDER THE SPECIALTIES DIVISION OF THE SPECIFICATIONS. PROVIDE SINGLE TEMPERATURE MIXING VALVE IN WALL FOR SHOWER BEHIND ACCESS PANEL
ST	A1	SINK TRIM	CHICAGO FAUCET	50-GN2FC317ABCP	ROUGH-IN: 2"W, 2"V, & 3/4"HW & CW, 1 1/2"P-TRAP, SINGLE HOLE PUNCH, LK-99 BASKET STRAINER WITH 1-1/2" TAILPIECE, LA PATTERN CAST BRASS P-TRAP "SPEEDWAY"SUPPLIES WITH LOOSE KEY ANGLESTOPS. CHICAGO FAUCET, 1.5 GPM, AERATOR AND TWO LEVER 4"WRISTBLADES
TMV	A1	THERMOSTATIC MIXING VALVE	LAWLER MFG	802	ROUGH-INS: 1 1/4"HW. CW, & TW, BRONZE BODY, SET AT 120 DEG. F. W/CABINET, THERMOMETER & HWR CONNECTIONS
UR	CH	URINAL .125 GPF	AMERICAN STANDARD	6590.525	ROUGH-IN CONN'S: 2"SS, 2"V & 3/4"CW, SIPHON JET ACTION, SLOAN MODEL "SOLIS" 8186-.13 SOLAR POWERED BATTERY OPERATED SENSOR FLUSH VALVE WITH VACUUM BREAKER SCREWDRIVER STOP, VITREOUS CHINA WATER SAVER SIPHON JET URINAL WITH FLUSHING RIM, 3/4" CONNECTION THREADED 2" INSIDE, WALL HANGER, INSTALL AT ACCESSIBLE HEIGHT WHERE INDICATED ON THE ARCHITECTURAL DWGS.
UR	C1	URINAL .125 GPF	AMERICAN STANDARD	6590.525	ROUGH-IN CONN'S: 2"SS, 2"V & 3/4"CW, SIPHON JET ACTION, SLOAN MODEL "SOLIS" 8186-.13 SOLAR POWERED BATTERY OPERATED SENSOR FLUSH VALVE WITH VACUUM BREAKER SCREWDRIVER STOP, VITREOUS CHINA WATER SAVER SIPHON JET URINAL WITH FLUSHING RIM, 3/4" CONNECTION THREADED 2" INSIDE, WALL HANGER, INSTALL AT ACCESSIBLE HEIGHT WHERE INDICATED ON THE ARCHITECTURAL DWGS.
WC	CH	WATER CLOSET 1.28 GPF	AMERICAN STANDARD	MADERA HET #3461.001	ROUGH-IN CONN: 4"SS, 2"V, 1 1/4"CW, ELONGATED BOWL, VITREOUS CHINA FLOOR MOUNTED WATER CLOSET WITH 1 1/2" TOP SPUD. BENEKE 527-SS OPENFRONT WHITE SEAT WITH "PERMA-BUMPER" AND SELF-SUSTAINING CHECK HINGE, SLOAN MODEL SLOAN MODEL "SOLIS" RESS-C-1.28 SOLAR POWERED BATTERY OPERATED SENSOR FLUSH VALVE WITH VACUUM BREAKER SCREWDRIVER STOP AND SEAT BUMPER J.R. SMITH FIG. 9230 BRONZE FLOOR FLANGE, 17" TO 19" ACCESSIBLE HEIGHT
WC	C1	WATER CLOSET 1.28 GPF	AMERICAN STANDARD	MADERA HET #3451.001	ROUGH-IN CONN: 4"SS, 2"V, 1 1/4"CW, SIPHON JET ACTION, 1.28 GPF, ELONGATED BOWL, VITREOUS CHINA FLOOR MOUNTED WATER CLOSET WITH 1 1/2" TOP SPUD. BENEKE 527-SS OPENFRONT WHITE SEAT WITH "PERMA-BUMPER" AND SELF-SUSTAINING CHECK HINGE, SLOAN MODEL "SOLIS" RESS-C-1.28 SOLAR POWERED BATTERY OPERATED SENSOR FLUSH VALVE WITH VACUUM BREAKER SCREWDRIVER STOP AND SEAT BUMPER J.R. SMITH FIG. 9230 BRONZE FLOOR FLANGE.

IDENTIFICATION STAMP
DIV. OF THE STATE ARCHITECT
APP: 03-122664 INC:
REVIEWED FOR
SS ☑ FLS ☑ ACS ☑
DATE: 05/12/2023

pjhm architects
LA Phone: 213.278.0172 • Web: pjhm.com
LICENSED ARCHITECT
RICHARD W. RIDDELL
No. C15585
REN. 02/25
STATE OF CALIFORNIA
Engineous Group, Inc.
898 N. Fair Oaks Ave., Suite E
Pasadena, CA 91103
Phone: (626) 696-3850
LA Office: 837 Traction Avenue, #410, Los Angeles, CA 90013 • SD Phone: 760.730.5527
PROFESSIONAL ENGINEER
MECHANICAL
STATE OF CALIFORNIA
Exp. 6/30/24
OC Office: 24461 Ridge Route Drive #100, Laguna Hills, CA 92653 • OC Phone: 949.496.6191 • SD Office: 804 Pier View Way #103, Oceanside, CA 92054 • SD Phone: 760.730.5527

HIGHLAND HIGH SCHOOL
50M POOL & AQUATICS CENTER

KERN HIGH SCHOOL DISTRICT

PLUMBING SCHEDULE & DETAILS

P0.1

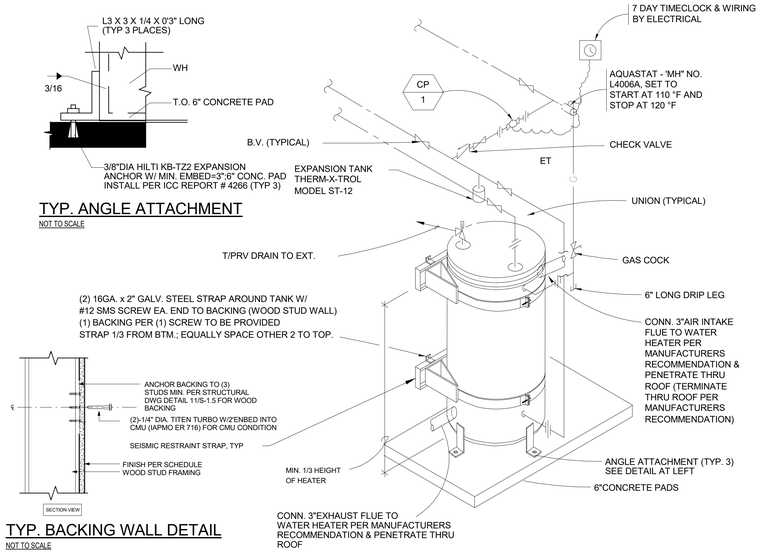

GAS WATER HEATER DETAIL

SCALE NONE | 6

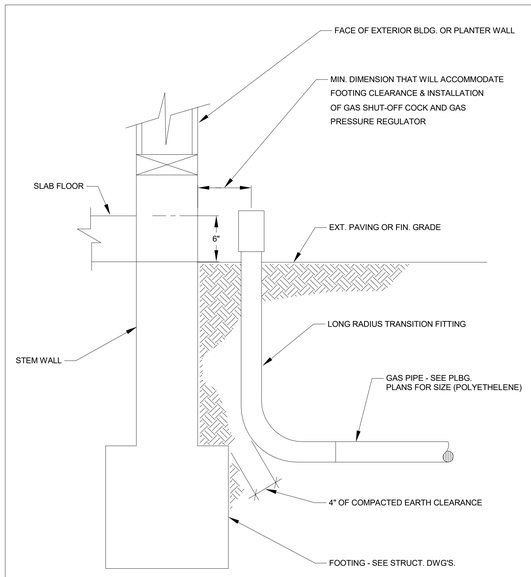

GAS RISER AT BUILDING DETAIL

SCALE NONE | 3

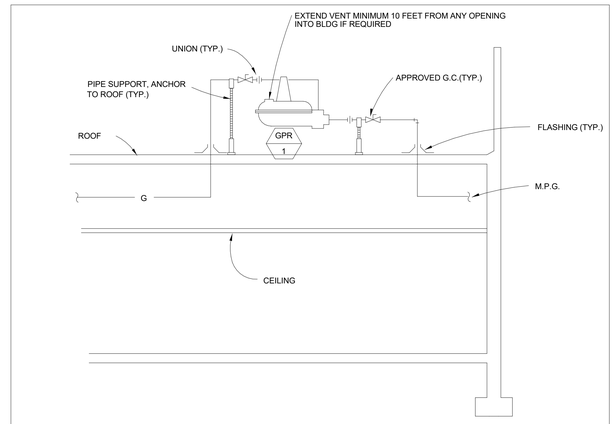

GAS PRESSURE REGULATOR ON ROOF DETAIL

SCALE NONE | 1

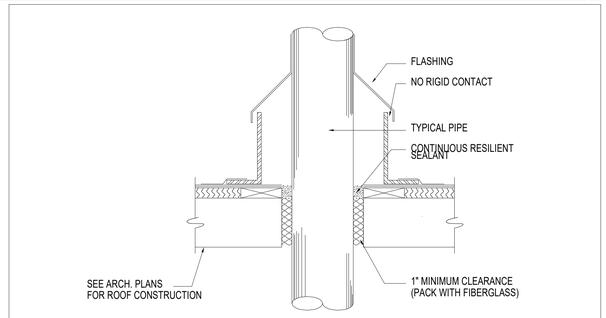

NOTE:
1. FLASHING, COUNTER FLASHING & ROOFING DETAILS ARE SCHEMATIC AND ARE TO INDICATE THE CONCEPT ONLY. SEE ARCHITECTURAL PLANS FOR DETAILS. (9,10 A-5.5) (11,12 A-5.5)

WATERPROOF PENETRATION DETAIL

SCALE NONE | 7

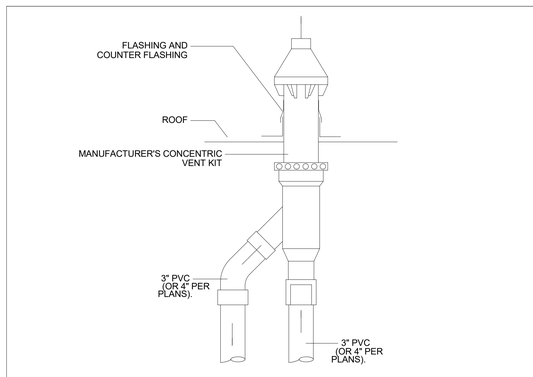

ROOF VENT WATER HEATERS

SCALE NONE | 4

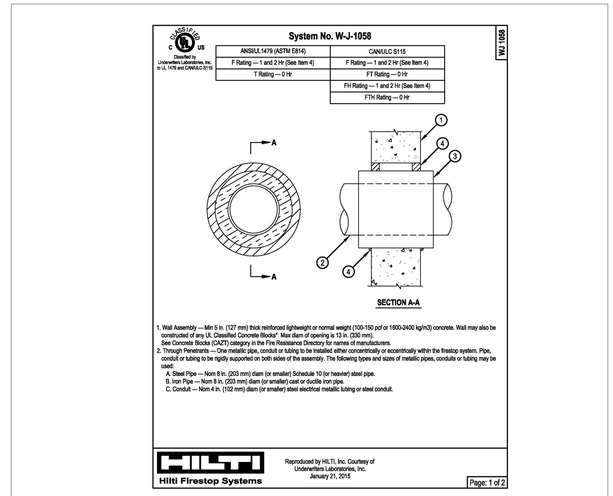

System No. W-J-1058 — W-J-1058

ANSI/UL1479 (ASTM E814)	CAN/ULC S115
F Rating — 1 and 2 Hr (See Item 4)	F Rating — 1 and 2 Hr (See Item 4)
T Rating — 0 Hr	FT Rating — 0 Hr
	FH Rating — 1 and 2 Hr (See Item 4)
	FTH Rating — 0 Hr

SECTION A-A

1. Wall Assembly — Min 5 in. (127 mm) thick reinforced lightweight or normal weight (100-150 pcf or 1600-2400 kg/m3) concrete. Wall may also be constructed of any UL Classified Concrete Blocks*. Max diam of opening is 13 in. (330 mm).
See Concrete Blocks (CAZT) category in the Fire Resistance Directory for names of manufacturers.
2. Through Penetrants — One metallic pipe, conduit or tubing to be installed either concentrically or eccentrically within the firestop system. Pipe, conduit or tubing to be rigidly supported on both sides of the assembly. The following types and sizes of metallic pipes, conduits or tubing may be used:
A. Steel Pipe — Nom 8 in. (203 mm) diam (or smaller) Schedule 10 (or heavier) steel pipe.
B. Iron Pipe — Nom 8 in. (203 mm) diam (or smaller) cast or ductile iron pipe.
C. Conduit — Nom 4 in. (102 mm) diam (or smaller) steel electrical metallic tubing or steel conduit.

Hilti Firestop Systems — Reproduced by HILTI, Inc. Courtesy of Underwriters Laboratories, Inc. January 21, 2015 — Page: 1 of 2

System No. W-J-1058 — W-J-1058

3. Pipe Covering — Nom 2 in. (51 mm) thick hollow cylindrical heavy density (min 3.5 pcf or 56 kg/m3) fiberglass pipe covering with an all-service jacket. Pipe covering material to extend 2 in. (51 mm) beyond both sides of wall surface. Longitudinal joints sealed with metal fasteners or factory-applied self-sealing lap (SSL) tape. The annular space between the pipe covering and periphery of opening shall be min 0 in. (point contact) to max 3/8 in. (5 mm).
See Pipe and Equipment Covering-Materials (BRGU) category in the Building Materials Directory for names of manufacturers. Any pipe covering material meeting the above specifications and bearing the UL Classification Marking with a Flame Spread Index of 25 or less and a Smoke Developed Index of 50 or less may be used.
4. Fill, Void or Cavity Material* — Sealant — In 1 hr assemblies, min 5/8 in. thickness of fill material applied within annulus flush with both surfaces of wall. In 2 hr assemblies, min 1-1/4 in. (32 mm) thickness of fill material applied within annulus flush with both surfaces of wall. For both 1 and 2 hr assemblies, at point contact location between insulation and gypsum board, a min 1/2 in. (13 mm) bead of fill material shall be applied on both sides of wall.
HILTI CONSTRUCTION CHEMICALS, DIV OF HILTI INC — FS-ONE Sealant or FS-ONE MAX Intumescent Sealant

* Indicates such products shall bear the UL or cUL Certification Mark for jurisdictions employing the UL or cUL Certification (such as Canada), respectively.

Hilti Firestop Systems — Reproduced by HILTI, Inc. Courtesy of Underwriters Laboratories, Inc. January 21, 2015 — Page: 2 of 2

FIRE RATED PIPE PENETRATION

SCALE NONE | 2

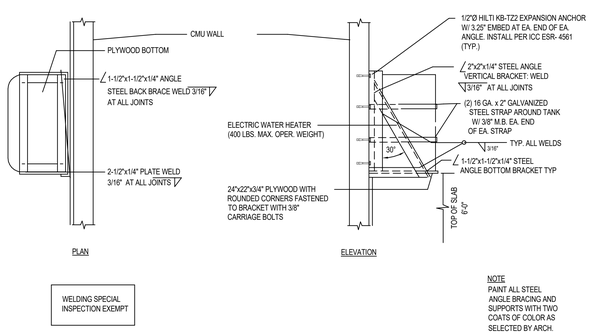

NOT TO SCALE

THERMAL EXPANSION TANK

8

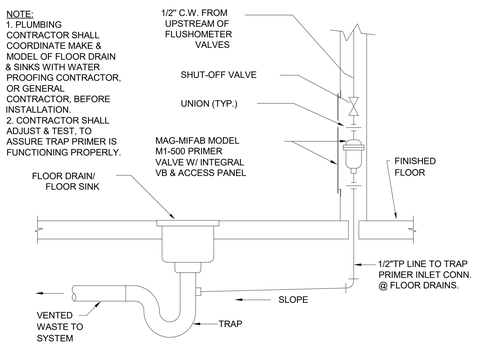

TRAP PRIMER DETAIL

SCALE NONE | 5

IDENTIFICATION STAMP
DIV. OF THE STATE ARCHITECT
APP: 03-122664 INC:
REVIEWED FOR
SS ☑ FLS ☑ ACS ☑
DATE: 05/12/2023

pjhm architects
LA Phone: 213.278.0172 • Web: pjhm.com
LICENSED ARCHITECT — STEPHEN W. PIHAS — NO. C15585 — REN. 02/25 — STATE OF CALIFORNIA
Engineous Group, Inc.
898 N. Fair Oaks Ave., Suite E
Pasadena, CA 91103
Phone: (626) 696-3550
PROFESSIONAL ENGINEER — ROBERT T. EVANS — NO. 27963 — Exp. 6/30/24 — MECHANICAL — STATE OF CALIFORNIA

HIGHLAND HIGH SCHOOL
50M POOL & AQUATICS CENTER

KERN HIGH SCHOOL DISTRICT

PLUMBING DETAILS

OC Office: 24461 Ridge Route Drive #100, Laguna Hills, CA 92653 • OC Phone: 949.496.6191 • SD Office: 804 Pier View Way #103, Oceanside, CA 92054 • SD Phone: 760.730.5527 • LA Office: 837 Traction Avenue, #410, Los Angeles, CA 90013 • LA Phone: 213.278.0172 • Web: pjhm.com

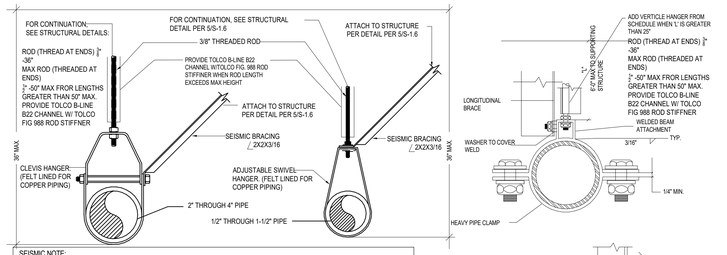

SEISMIC NOTE:
SEISMIC BRACING SHALL NOT BE REQUIRED FOR GAS PIPING 1" AND SMALLER AND OTHER PIPING <4" WHERE HANGER RODS ARE NOT EXCEEDING 12" FROM PIPE SUPPORT POINT TO THE CONNECTION AT THE SUPPORTING STRUCTURE AND PROVISIONS ARE MADE TO AVOID IMPACT WITH OTHER STRUCTURAL OR NON-STRUCTURAL COMPONENTS. TRANSVERSE BRACING TO BE PROVIDED AT THE BEGINNING AND END OF EACH RUN AND LONGITUDINAL BRACING SHALL OCCUR AT EACH RUN, REGARDLESS OF RUN LENGTH. ALL WORK TO BE IN ACCORDANCE WITH CBC 2019 SEC. 1617A.1.26. PIPE SIZE W/O SEISMIC BRACING NOT TO EXCEED 3" IN DIAMETER (1 INCH FOR GAS). ROD SIZE TO BE ⅜" OR ½" PER TABLE. WEIGHT ON HANGER NOT TO EXCEED 50 LBS.

HANGERS AND SUPPORT			
PIPE MATERIAL	TYPE OF JOINTS	HORIZONTAL SUPPORTS	VERTICAL SUPPORTS
CAST IRON HUBLESS	SHIELDED COUPLING	EVERY OTHER JOINT, UNLESS OVER 4 FT, THEN SUPPORT EACH JOINT.	BASE AND EACH FLOOR NOT TO EXCEED 15 FT
COPPER TUBE AND PIPE	SOLDERED OR BRAZED	1 1/2" AND SMALLER, 6 FT; 2" AND LARGER, 10'	EACH FLOOR, NOT TO EXCEED 10 FT.
STEEL PIPE FOR GAS	THREADED OR WELDED	1/2 IN., 6 FT. 3/4 IN. AND 1 IN. 8 FT. 1 1/4 IN. AND LARGER, 10 FT.	1/2 IN., 6 FT. 3/4 IN. AND 1 IN. 8 FT. 1 1/4 IN. AND LARGER, EVERY FLOOR LEVEL

1. SUPPORT ADJACENT TO JOINT, NOT TO EXCEED18 INCHES.
2. SEISMIC BRACE NOT TO EXCEED 40 FOOT INTERVALS FOR TRANSVERSE, AND 80 FT FOR LONGITUDINAL TO PREVENT HORIZONTAL MOVEMENT.
3. SUPPORT AT EACH HORIZONTAL BRANCH CONNECTION.
4. HANGERS SHALL NOT BE PLACED ON THE COUPLING.
5. ALL WORK TO BE IN ACCORDANCE WITH CBC 2019 SEC. 1617A.1.26.
6. PIPE SIZE W/O SEISMIC BRACING NOT TO EXCEED 3" IN DIAMETER (1 INCH FOR GAS). ROD SIZE TO BE ⅜" OR ½" PER TABLE.
7. WEIGHT ON HANGER NOT TO EXCEED 50 LBS.

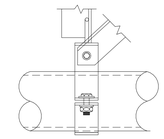

LONGITUDINAL BRACING FOR PIPES

HANGER ROD SIZES	
PIPE SIZE (INCHES)	ROD SIZE (INCHES)
1/2 - 4	3/8" (SEE NOTE A)

NOTE A: PROVIDE ½" DIA. WHERE REQUIRED BY ROD LENGTH AS NOTED IN THIS DETAIL

PIPE HANGING DETAIL

SCALE NONE — 1

HUB DRAIN DETAIL

SCALE NONE — 2

IDENTIFICATION STAMP
DIV. OF THE STATE ARCHITECT
APP: 03-122664 INC:
REVIEWED FOR
SS ☑ FLS ☑ ACS ☑
DATE: 05/12/2023

pjhm architects
LA Phone: 213.278.0172 • Web: pjhm.com
LICENSED ARCHITECT — RICHARD W. RUDOLF — NO. C15585 — REN. 02/25 — STATE OF CALIFORNIA
Engineous Group, Inc.
898 N. Fair Oaks Ave., Suite E
Pasadena, CA 91103
Phone: (626) 696-3550
PROFESSIONAL ENGINEER — CIVIL — No. 27963 — Exp. 6/30/24 — MECHANICAL — STATE OF CALIFORNIA
LA Office: 837 Traction Avenue, #410, Los Angeles, CA 90013 • SD Phone: 760.730.5527 • SD Office: 804 Pier View Way #103, Oceanside, CA 92054 • OC Office: 24461 Ridge Route Drive #100, Laguna Hills, CA 92653 • OC Phone: 949.496.6191

HIGHLAND HIGH SCHOOL
50M POOL & AQUATICS CENTER

KERN HIGH SCHOOL DISTRICT

PLUMBING DETAILS

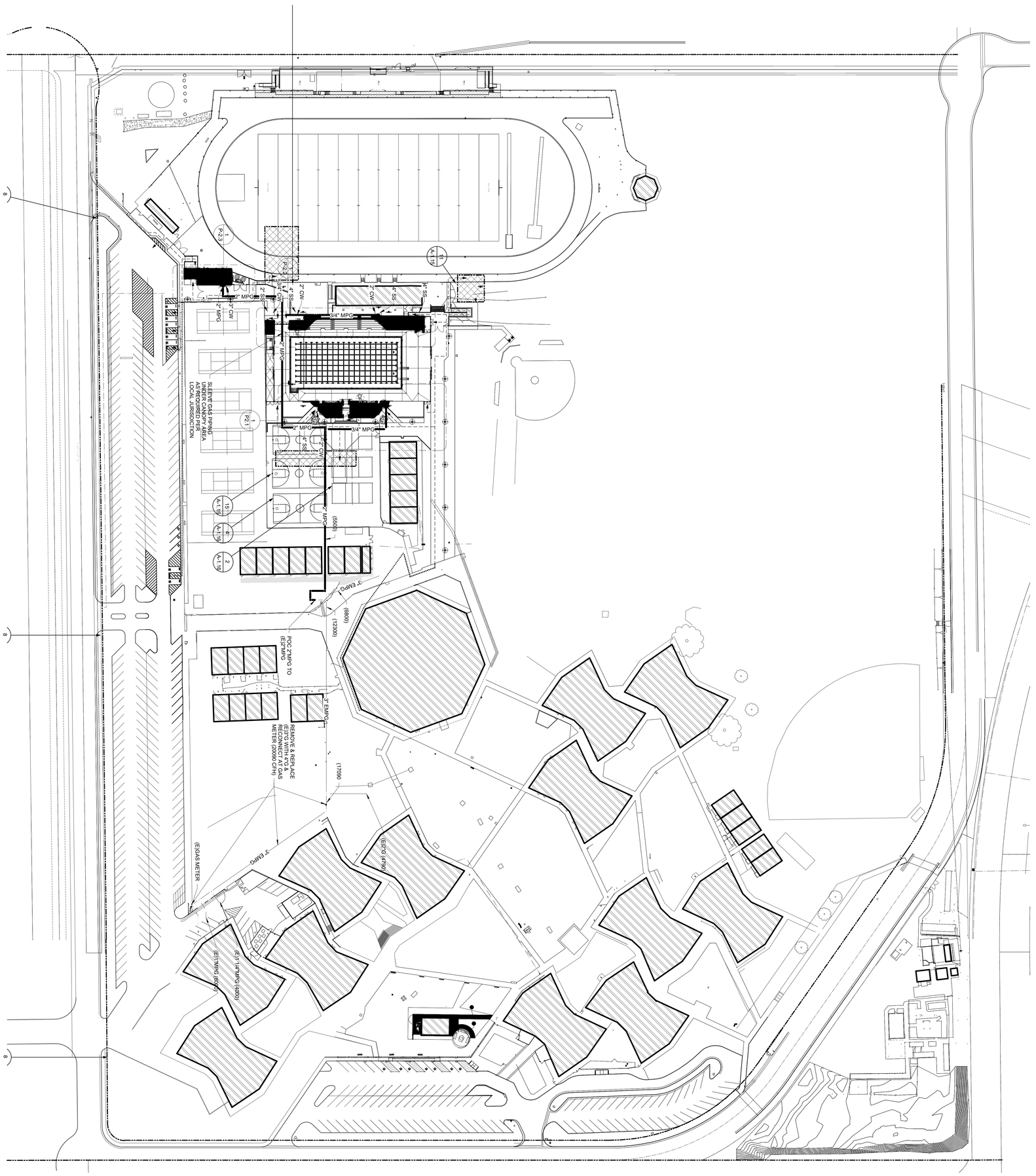

1 PLUMBING SITE PLAN
1" = 60'-0"

PLUMBING SITE PLAN

HIGHLAND HIGH SCHOOL
50M POOL & AQUATICS CENTER

KERN HIGH SCHOOL DISTRICT

Engineous Group, Inc.

pjhm architects

IDENTIFICATION STAMP
DIV. OF THE STATE ARCHITECT
APP: 03-122664 INC:
REVIEWED FOR
SS ☑ FLS ☑ ACS ☑
DATE: 05/12/2023

P2.0

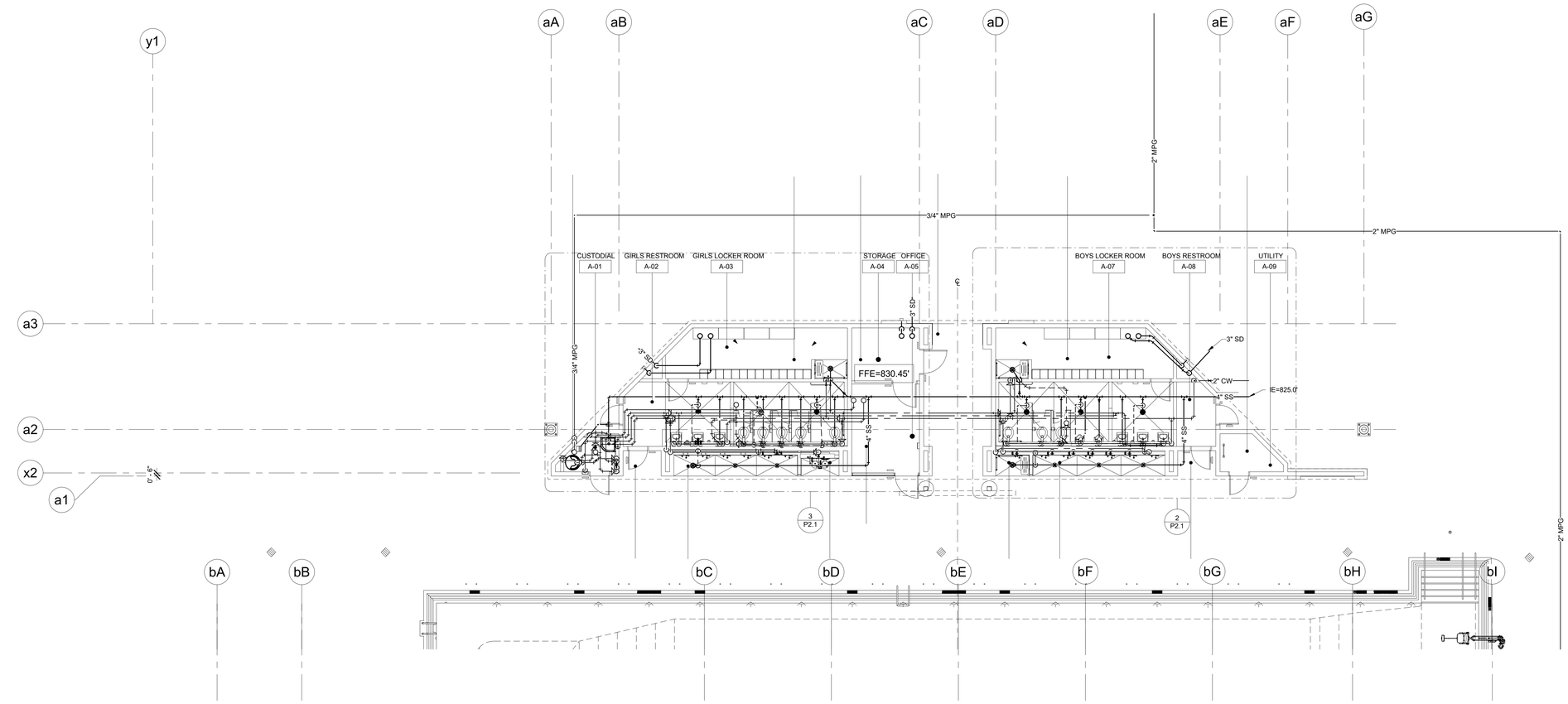

1 PLUMBING FLOOR PLAN - BUILDING A
1/8" = 1'-0"

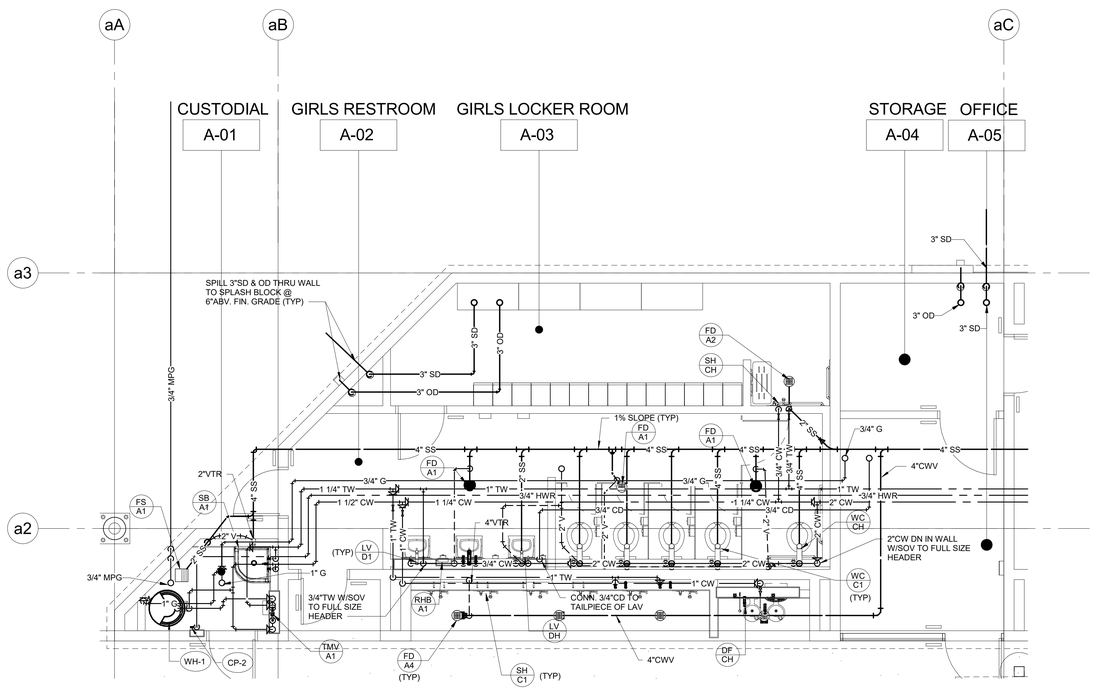

3 ENLARGED PLUMBING FLOOR PLAN - GIRLS LOCKER AREA
1/4" = 1'-0"

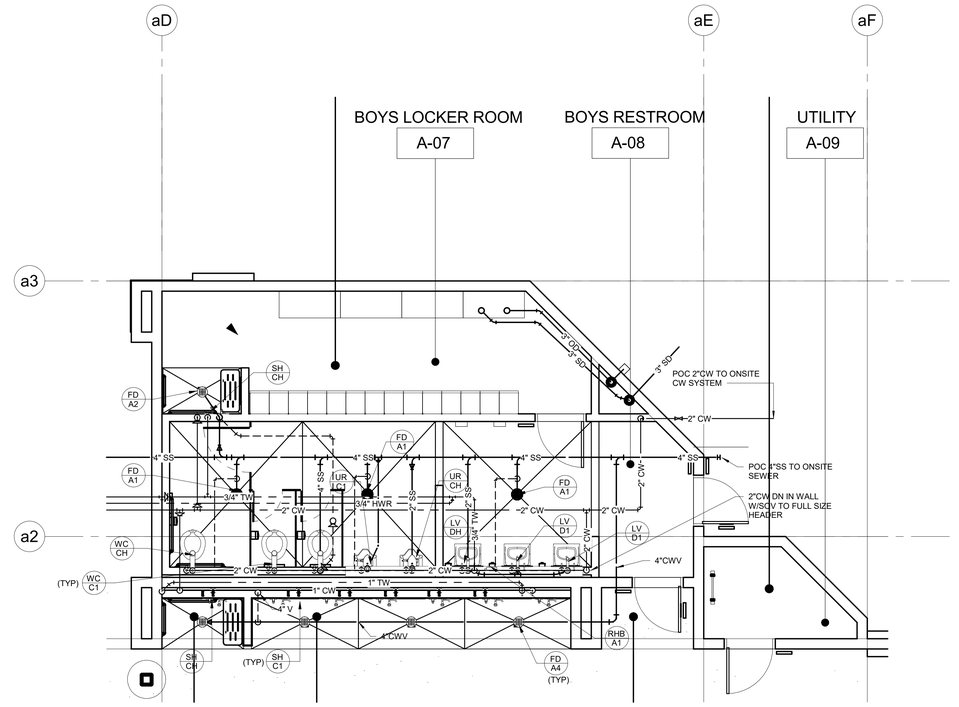

2 ENLARGED PLUMBING FLOOR PLAN - BOYS LOCKER AREA
1/4" = 1'-0"

IDENTIFICATION STAMP
DIV. OF THE STATE ARCHITECT
APP: 03-122664 INC:
REVIEWED FOR
SS ☑ FLS ☑ ACS ☑
DATE: 05/12/2023

pjhm architects

LICENSED ARCHITECT
RICHARD W. FRUIN
NO. C15585
REN. 02/25
STATE OF CALIFORNIA

Engineous Group, Inc.
898 N. Fair Oaks Ave., Suite E
Pasadena, CA 91103
Phone: (626) 696-3550

REGISTERED PROFESSIONAL ENGINEER
MICHAEL T. ESSARY
No. M 27963
Exp. 6/30/24
MECHANICAL
STATE OF CALIFORNIA

HIGHLAND HIGH SCHOOL
50M POOL & AQUATICS CENTER

KERN HIGH SCHOOL DISTRICT

PLUMBING FLOOR PLAN - BUILDING A

P2.1

LA Office: 837 Traction Avenue, #410, Los Angeles, CA 90013 • LA Phone: 213.278.0172 • Web: pjhm.com
SD Phone: 760.730.5527 • SD Office: 804 Pier View Way #103, Oceanside, CA 92054
OC Office: 24461 Ridge Route Drive #100, Laguna Hills, CA 92653 • OC Phone: 949.496.6191 • SD Office: 804 Pier View Way #103, Oceanside, CA 92054

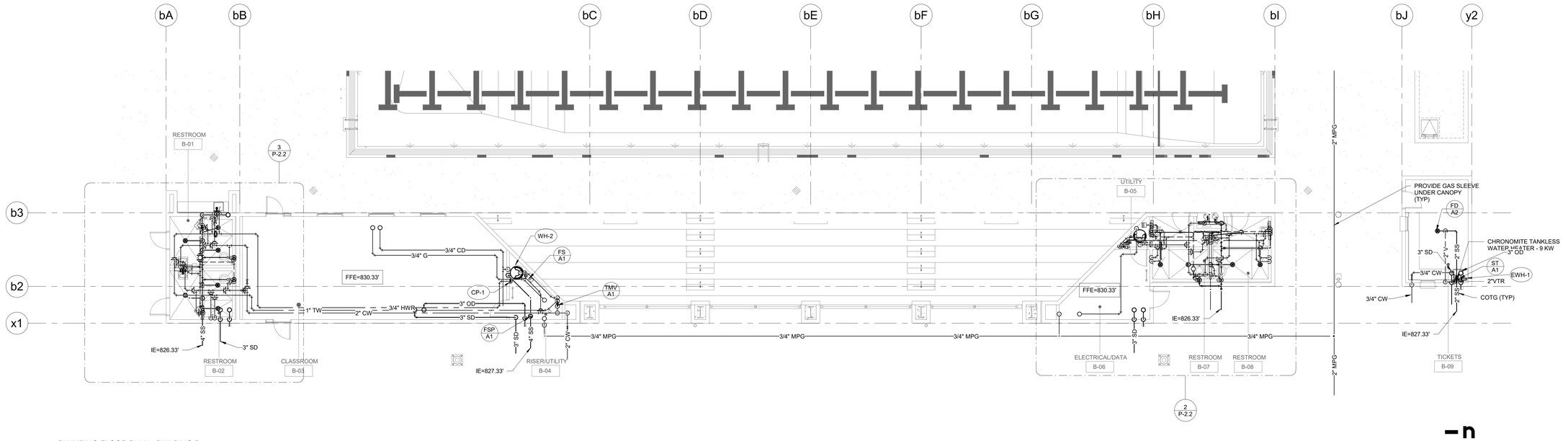

1 PLUMBING FLOOR PLAN - BUILDING B
1/8" = 1'-0"

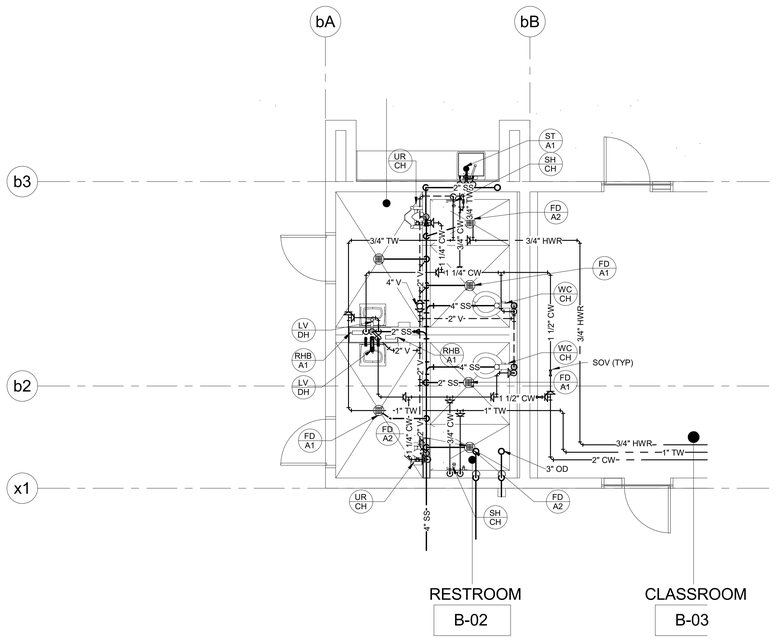

3 ENLARGED FLOOR PLANS - BUILDING
B101 & B102
1/4" = 1'-0"

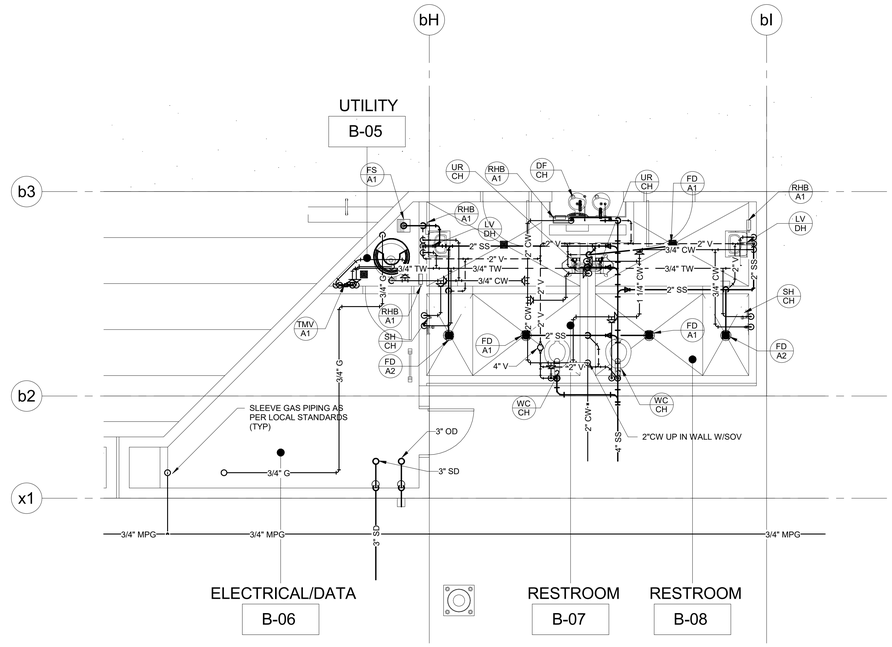

2 ENLARGED FLOOR PLAN - BUILDING B -
B-07 & B-08
1/4" = 1'-0"

IDENTIFICATION STAMP
DIV. OF THE STATE ARCHITECT
APP: 03-122664 INC:
REVIEWED FOR
SS ☑ FLS ☑ ACS ☑
DATE: 05/12/2023

pjhm architects

LICENSED ARCHITECT
THOMAS W. KRUSE
NO. C15585
REN. 02/25
STATE OF CALIFORNIA

Engineous Group, Inc.
898 N. Fair Oaks Ave., Suite E
Pasadena, CA 91103
Phone: (626) 696-3850

REGISTERED PROFESSIONAL ENGINEER
CHARLES E. SIMPSON
No. 27963
Exp. 6/30/24
MECHANICAL
STATE OF CALIFORNIA

HIGHLAND HIGH SCHOOL
50M POOL & AQUATICS CENTER

KERN HIGH SCHOOL DISTRICT

PLUMBING FLOOR PLAN - BUILDING B

OC Office: 24461 Ridge Route Drive #100, Laguna Hills, CA 92653 • OC Phone: 949.496.6191 • SD Office: 804 Pier View Way #103, Oceanside, CA 92054 • SD Phone: 760.730.5527 • LA Office: 837 Traction Avenue, #410, Los Angeles, CA 90013 • LA Phone: 213.278.0172 • Web: pjhm.com

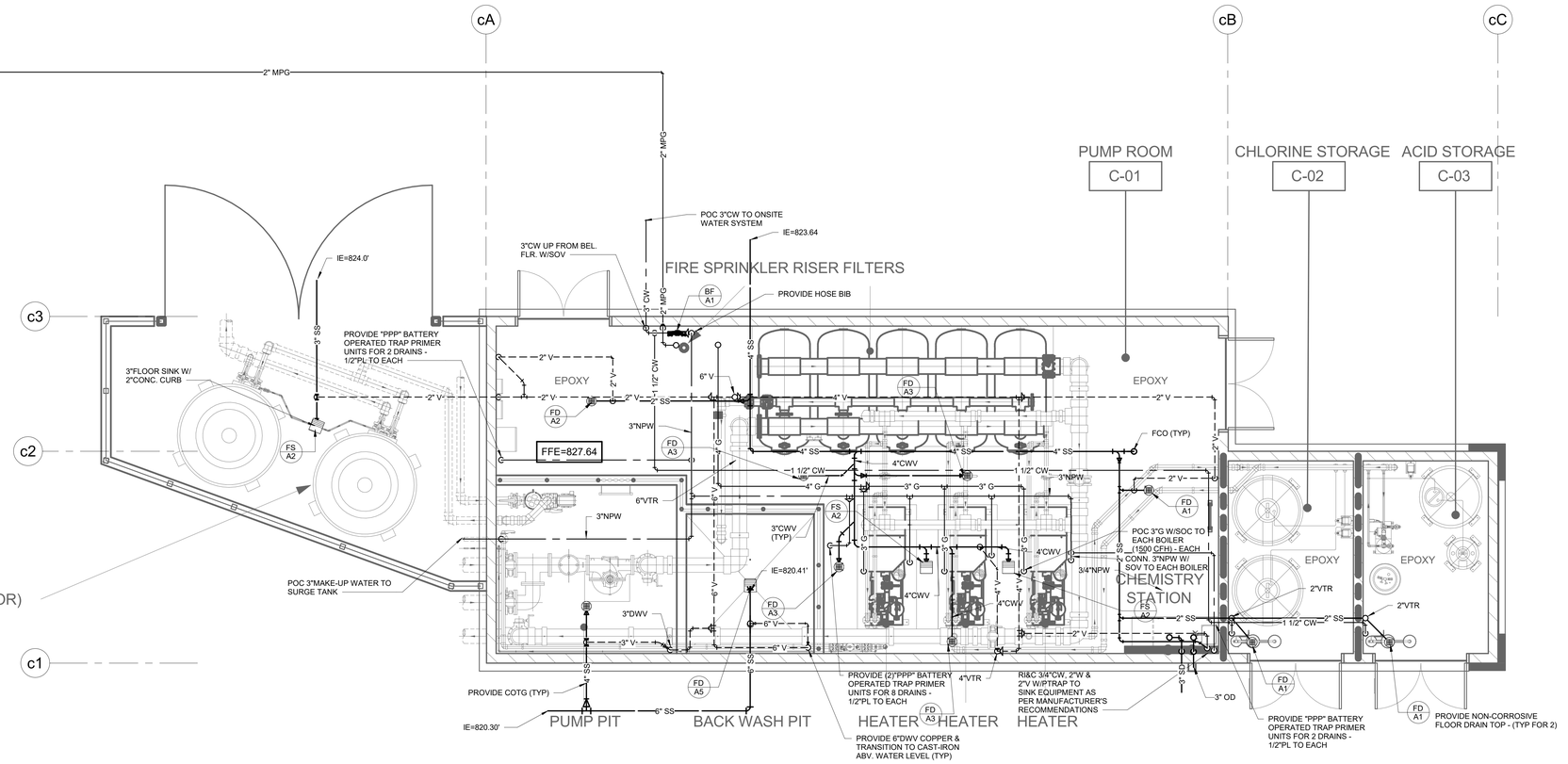

1 PLUMBING FLOOR PLAN - BUILDING C
1/4" = 1'-0"

IDENTIFICATION STAMP
DIV. OF THE STATE ARCHITECT
APP: 03-122664 INC:
REVIEWED FOR
SS ☑ FLS ☑ ACS ☑
DATE: 05/12/2023

pjhm architects

LICENSED ARCHITECT
RICHARD W. RUSH
NO. C15585
REN. 02/25
STATE OF CALIFORNIA

Engineous Group, Inc.
898 N. Fair Oaks Ave., Suite E
Pasadena, CA 91103
Phone: (626) 696-3550

PROFESSIONAL ENGINEER
JEFFREY C. MCCHANICAN
NO. 27963
Exp. 6/30/24
STATE OF CALIFORNIA

HIGHLAND HIGH SCHOOL
50M POOL & AQUATICS CENTER

KERN HIGH SCHOOL DISTRICT

PLUMBING FLOOR PLAN - BUILDING C

P-2.3

LA Office: 837 Traction Avenue, #410, Los Angeles, CA 90013 • LA Phone: 213.278.0172 • Web: pjhm.com
SD Office: 804 Pier View Way #103, Oceanside, CA 92054 • SD Phone: 760.730.5527 •
OC Office: 24461 Ridge Route Drive #100, Laguna Hills, CA 92653 • OC Phone: 949.496.6191 •

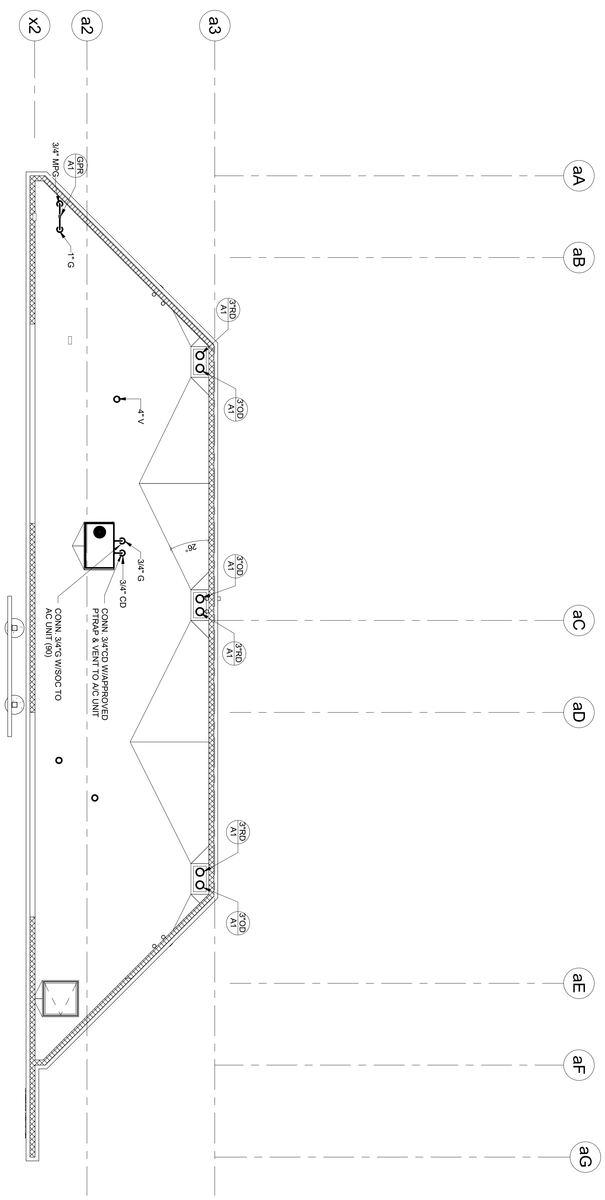

1 PLUMBING ROOF PLAN - BUILDING A
1/8" = 1'-0"

PLUMBING ROOF PLAN - BUILDING A

HIGHLAND HIGH SCHOOL
50M POOL & AQUATICS CENTER

KERN HIGH SCHOOL DISTRICT

P-3.1

Engineous Group, Inc.

pjhm architects

IDENTIFICATION STAMP
DIV. OF THE STATE ARCHITECT
APP: 03-122664 INC:
SS ☑ REVIEWED FOR
FLS ☑ ACS ☑
DATE: 05/12/2023

OC Office: 24461 Ridge Route Drive #100, Laguna Hills, CA 92653 • **OC** Phone: 949.496.6191 • **SD** Office: 804 Pier View Way #103, Oceanside, CA 92054 • **SD** Phone: 760.730.5527 • **LA** Office: 837 Traction Avenue, #410, Los Angeles, CA 90013 • **LA** Phone: 213.278.0172 • Web: pjhm.com

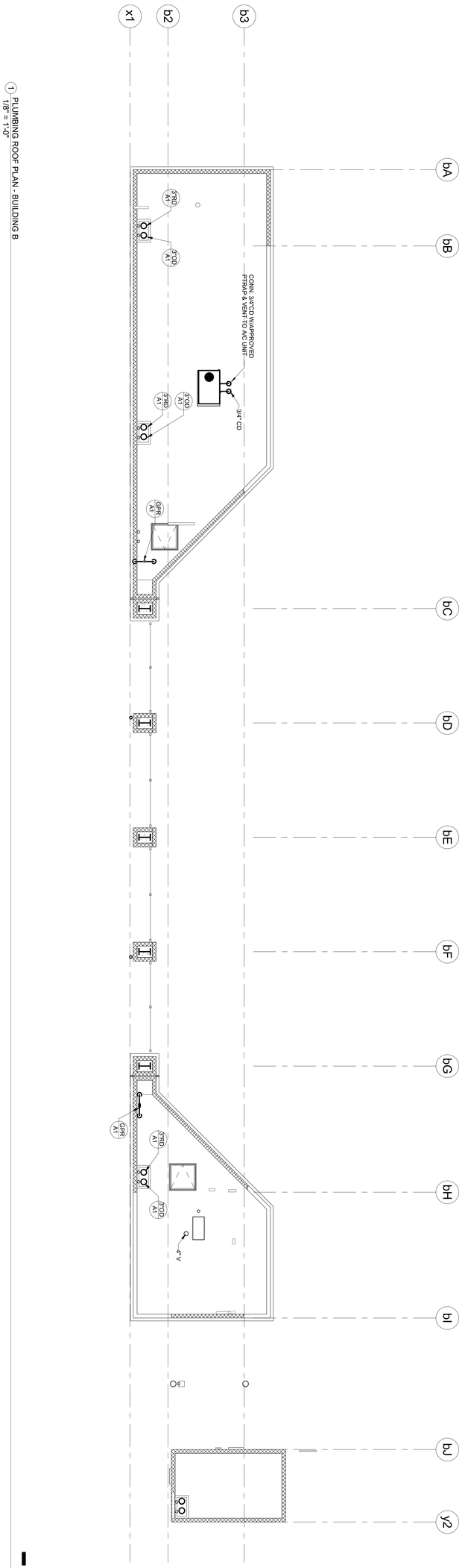

1 PLUMBING ROOF PLAN - BUILDING B
1/8" = 1'-0"

PLUMBING ROOF PLAN - BUILDING B

HIGHLAND HIGH SCHOOL
50M POOL & AQUATICS CENTER

KERN HIGH SCHOOL DISTRICT

P-3.2

Engineous Group, Inc.

IDENTIFICATION STAMP
DIV. OF THE STATE ARCHITECT
APP: 03-122664 INC:
REVIEWED FOR
SS ☑ FLS ☑ ACS ☑
DATE: 05/12/2023

OC Office: 24461 Ridge Route Drive #100, Laguna Hills, CA 92653 • **OC** Phone: 949.496.6191 • **SD** Office: 804 Pier View Way #103, Oceanside, CA 92054 • **SD** Phone: 760.730.5527 • **LA** Office: 837 Traction Avenue, #410, Los Angeles, CA 90013 • **LA** Phone: 213.278.0172 • Web: pjhm.com

OC Office: 24461 Ridge Route Drive #100, Laguna Hills, CA 92653 • **OC** Phone: 949.496.6191 • **SD** Office: 804 Pier View Way #103, Oceanside, CA 92054 • **SD** Phone: 760.730.5527 • **LA** Office: 837 Traction Avenue, #410, Los Angeles, CA 90013 • **LA** Phone: 213.278.0172 • Web: plhm.com

plhm architects

Engineous Group, Inc.

IDENTIFICATION STAMP
DIV. OF THE STATE ARCHITECT
APP: 03-122664 INC:
REVIEWED FOR
SS ☑ FLS ☑ ACS ☑
DATE: 05/12/2023

HIGHLAND HIGH SCHOOL
50M POOL & AQUATICS CENTER
KERN HIGH SCHOOL DISTRICT

PLUMBING ROOF PLAN -
BUILDING C

P-3.3

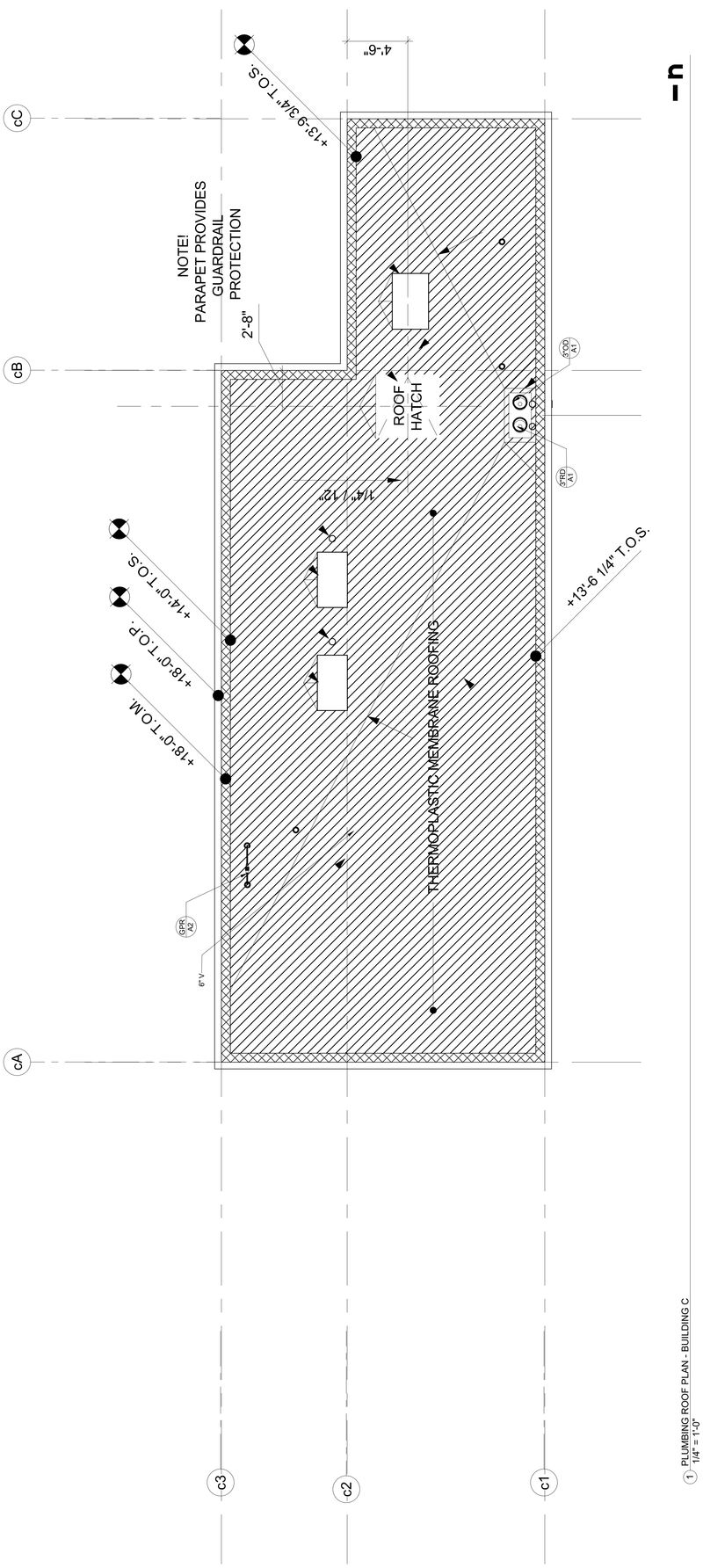

1 PLUMBING ROOF PLAN - BUILDING C
1/4" = 1'-0"

Project Name:	HIGHLAND HS POOL - BLDG A	NRCC-PRF-01-E	Page 1 of 11
Project Address:	39055 25th St W. PALMDALE 93551	Calculation Date/Time:	08:42, Thu, Mar 23, 2023
Input File Name:	Highland HS - Swimming Pool - Bldg A - Title 24.cibd19x		

A. GENERAL INFORMATION

1	Project Location (city)	PALMDALE	8	Standards Version	Compliance2019
2	CA Zip Code	93551	9	Compliance Software (version)	EnergyPro 8.3
3	Climate Zone	14	10	Weather File	PALMDALE_723820_CZ2010.epw
4	Total Conditioned Floor Area in Scope	788 ft²	11	Building Orientation (deg)	(N) 0 deg
5	Total Unconditioned Floor Area	3 ft²	12	Permitted Scope of Work	NewEnvelopeAndMechanical
6	Total # of Stories (Habitable Above Grade)	1	13	Building Type(s)	Nonresidential
7	Total # of dwelling units	0	14	Gas Type	NaturalGas

B. PROJECT SUMMARY

Table Instructions: Table B shows which building components are included in the performance calculation. If indicated as not included, the project must show compliance prescriptively if within permit application.

Building Components Complying via Performance				Building Components Complying Prescriptively	
Envelope (see Table G)	☒ Performance	Covered Process: Commercial Kitchens	☐ Performance	*The following building components are ONLY eligible for prescriptive compliance and should be documented on the NRCC form listed if within the scope of the permit application (i.e. compliance will not be shown on the NRCC-PRF-E).*	
	☐ Not Included		☒ Not Included		
Mechanical (see Table H)	☒ Performance	Covered Process: Computer Rooms	☐ Performance	Indoor Lighting (Unconditioned)§140.6	*NRCC-LTI-E*
	☐ Not Included		☒ Not Included	Outdoor Lighting §140.7	*NRCC-LTO-E*
Domestic Hot Water (see Table I)	☐ Performance	Covered Process: Laboratory Exhaust	☐ Performance	Sign Lighting §140.8	*NRCC -LTS-E*
	☒ Not Included		☒ Not Included	Mandatory Measures	
Lighting (Indoor Conditioned, see Table K)	☐ Performance			*Electrical power systems, commissioning, solar ready, elevator and escalator requirements are mandatory and should on the NRCC form listed if applicable (i.e. compliance will not be shown on the NRCC-PRF-E.)*	
	☒ Not Included			Electrical Power Distribution §110.11	*NRCC-ELC-E*
Solar Thermal Water Heating (see Table I)	☐ Performance			Commissioning §120.8	*NRCC-CXR-E*
	☒ Not Included			Solar Ready §110.10	*NRCC-SRA-E*

Project Name:	HIGHLAND HS POOL - BLDG A	NRCC-PRF-01-E	Page 2 of 11
Project Address:	39055 25th St W. PALMDALE 93551	Calculation Date/Time:	08:42, Thu, Mar 23, 2023
Input File Name:	Highland HS - Swimming Pool - Bldg A - Title 24.cibd19x		

C1. COMPLIANCE RESULTS FOR PERFORMANCE COMPONENTS (Annual TDV Energy Use, kBtu/ft ²-yr)

COMPLIES

Energy Component	Standard Design (TDV)	Proposed Design (TDV)	Compliance Margin (TDV)[1]
Space Heating	25.58	66.14	-40.56
Space Cooling	122.50	147.05	-24.55
Indoor Fans	200.64	125.88	74.76
Heat Rejection	--	--	--
Pumps & Misc.	--	--	--
Domestic Hot Water	171.23	171.23	--
Indoor Lighting	50.40	50.40	--
ENERGY STANDARDS COMPLIANCE TOTAL	**570.35**	**560.70**	**9.65 (1.7%)**

[1] *Notes: The number in parenthesis following the Compliance Margin in column 4, represents the Percent Better than Standard.*

C2. RESULTS FOR 'ABOVE CODE' QUALIFICATIONS[1]

☐ This project is pursuing CalGreen Tier 1 ☐ This project is pursuing CalGreen Tier 2

Miscellaneous Energy Component	Standard Design (TDV)	Proposed Design (TDV)	Compliance Margin (TDV)[1]
Receptacle	78.80	78.80	--
Process	--	--	--
Other Ltg	0.15	0.15	--
Process Motors	--	--	--
COMPLIANCE TOTAL PLUS MISCELLANEOUS COMPONENTS	**649.30**	**639.65**	**9.6 (1.5%)**

[1] *Notes: This table is used to document compliance with programs OTHER THAN Title 24 Part 6, if applicable.*

Project Name:	HIGHLAND HS POOL - BLDG A	NRCC-PRF-01-E	Page 3 of 11
Project Address:	39055 25th St W. PALMDALE 93551	Calculation Date/Time:	08:42, Thu, Mar 23, 2023
Input File Name:	Highland HS - Swimming Pool - Bldg A - Title 24.cibd19x		

C3. ENERGY USE SUMMARY

Energy Component	Standard Design Site (MWh)	Proposed Design Site (MWh)	Margin (MWh)	Standard Design Site (MBtu)	Proposed Design Site (MBtu)	Margin (MBtu)
Space Heating	--	--	--	9.8	25.2	-15.4
Space Cooling	2.2	2.4	-0.2	--	--	--
Indoor Fans	5.4	3.3	2.1	--	--	--
Heat Rejection	--	--	--	--	--	--
Pumps & Misc.	--	--	--	--	--	--
Domestic Hot Water	4.4	4.4	0.0	7.1	7.1	0.0
Indoor Lighting	1.3	1.3	0.0	--	--	-->
Compliance Total	**13.3**	**11.4**	**1.9**	**16.9**	**32.3**	**-15.4**
Receptacle	2.1	2.1	0.0	--	--	--
Process	--	--	--	--	--	--
Other Ltg	0.0	0.0	--	--	--	--
Process Motors	--	--	--	--	--	--
TOTAL	**15.4**	**13.5**	**1.9**	**16.9**	**32.3**	**-15.4**

D. EXCEPTIONAL CONDITIONS

This project includes partial performance compliance scope options. The building must show compliance with all other applicable compliance scope options (performance or prescriptively) before occupying.

The building does not include service water heating. Verify that service water heating is not required and is not included in the design.

This project uses the Simplified Geometry Performance Modeling Approach which is not capable of modeling daylighting controls and assumes the prescriptive Secondary Daylit Control requirements are met. PRESCRIPTIVE COMPLIANCE documentation (form NRCC-LTI-02-E) for the requirements of section 140.6(d) Automatic Daylighting Controls in Secondary Daylit Zones is required.

E. HERS VERIFICATION

This Section Does Not Apply

Project Name:	HIGHLAND HS POOL - BLDG A	NRCC-PRF-01-E	Page 4 of 11
Project Address:	39055 25th St W. PALMDALE 93551	Calculation Date/Time:	08:42, Thu, Mar 23, 2023
Input File Name:	Highland HS - Swimming Pool - Bldg A - Title 24.cibd19x		

G1. ENVELOPE GENERAL INFORMATION (conditioned spaces only)

1	2	3	4
Opaque Surfaces & Orientation	**Total Gross Surface Area (ft²)**	**Total Fenestration Area (ft²)**	**Window to Wall Ratio (%)**
North-Facing[1]	310 ft²	0 ft²	00.0%
East-Facing[2]	913 ft²	0 ft²	00.0%
South-Facing[3]	386 ft²	0 ft²	00.0%
West-Facing[4]	168 ft²	107 ft²	63.7%
Total	**1,777 ft²**	**107 ft²**	**06.0%**
Roof	788 ft²	0 ft²	00.0%

Notes:
[1] *North-Facing is oriented to within 45 degrees of true north, including 45°00'00" east of north (NE), but excluding 45°00'00" west of north (NW).*
[2] *East-Facing is oriented to within 45 degrees of true east, including 45°00'00" south of east (SE), but excluding 45°00'00" north of east (NE).*
[3] *South-Facing is oriented to within 45 degrees of true south, including 45°00'00" west of south (SW), but excluding 45°00'00" east of south (SE).*
[4] *West-Facing is oriented to within 45 degrees of true west, including 45°00'00" north of due west (NW), but excluding 45°00'00" south of west (SW).*

G3. OPAQUE SURFACE ASSEMBLY SUMMARY

1	2	3	4	5	6	7	8	9	10
Surface Name	**Surface Type**	**Area (ft²)**	**Framing Type**	**Cavity R-Value**	**Continuous R-Value**	**Units**	**Value**	**Description of Assembly Layers**	**Status[1]**
Slab On Grade7	UndergroundFloor	791	NA	0	NA	F-Factor	0.73	Slab Type = UnheatedSlabOnGrade Insulation Orientation = None Insulation R-Value = R0	N
8 CMU Wall9	ExteriorWall	1777	NA	0	NA	U-Factor	0.379	Concrete - Part Grouted and Empty - 125 lb/ft3 - 8 in.	N
R-21 Wall13	InteriorWall	792	Wood	21	NA	U-Factor	0.066	Stucco - 7/8 in. Vapor permeable felt - 1/8 in. Wood framed wall, 16in. OC, 5.5in., R-21 Gypsum Board - 1/2 in.	N

Project Name:	HIGHLAND HS POOL - BLDG A	NRCC-PRF-01-E	Page 5 of 11
Project Address:	39055 25th St W. PALMDALE 93551	Calculation Date/Time:	08:42, Thu, Mar 23, 2023
Input File Name:	Highland HS - Swimming Pool - Bldg A - Title 24.cibd19x		

G3. OPAQUE SURFACE ASSEMBLY SUMMARY

1	2	3	4	5	6	7	8	9	10
Surface Name	**Surface Type**	**Area (ft²)**	**Framing Type**	**Cavity R-Value**	**Continuous R-Value**	**Units**	**Value**	**Description of Assembly Layers**	**Status[1]**
R-30 Roof No Attic15	Roof	788	Wood	30	NA	U-Factor	0.034	Asphalt shingles - 1/4 in. Vapor permeable felt - 1/8 in. Plywood - 1/2 in. Air - Cavity - Wall Roof Ceiling - 4 in. or more Wood framed roof, 16in. OC, 11.25in., R-30 Gypsum Board - 1/2 in.	N

[1] *Status: N - New, A – Altered, E – Existing*

G4. OPAQUE DOOR SUMMARY

1	2	3
Assembly Name	**Overall U-factor**	**Status[1]**
Metal Door40	0.700	N

G5. FENESTRATION ASSEMBLY SUMMARY

1	2	3	4	5	6	7	8	9
Fenestration Assembly Name / Tag or I.D.	**Fenestration Type / Product Type / Frame Type**	**Certification Method[1]**	**Assembly Method**	**Area ft²**	**Overall U-factor**	**Overall SHGC**	**Overall VT**	**Status[2]**
NFRC Labeled Storefront (NEW)	VerticalFenestration CurtainWall N/A	NFRC Rated	SiteBuilt	107	0.41	0.26	0.46	N

[1] *Newly installed fenestration shall have a certified NFRC Label Certificate or use the CEC default tables found in Table 110.6-A and Table 110.6-B. Center of Glass (COG) values are for the glass-only, determined by the manufacturer, and are shown for ease of verification. Site-built fenestration values are calculated per Nonresidential Appendix NA6 and are used in the analysis.*
[2] *Status: N – New, A – Altered, E – Existing*

Project Name:	HIGHLAND HS POOL - BLDG A	NRCC-PRF-01-E	Page 6 of 11
Project Address:	39055 25th St W. PALMDALE 93551	Calculation Date/Time:	08:42, Thu, Mar 23, 2023
Input File Name:	Highland HS - Swimming Pool - Bldg A - Title 24.cibd19x		

H1. DRY SYSTEM EQUIPMENT (furnaces, air handling units, heat pumps, VRF, economizers etc.)

1	2	3	4	5	6	7	8	9	10	11	12
			Heating				Cooling				
Equipment Name	**Equipment Type**	**Qty**	**Total Heating Output (kBtu/h)**	**Supp Heat Output (kBtuh)**	**Efficiency Unit**	**Efficiency**	**Total Cooling Output (kBtu/h)**	**Efficiency Unit**	**Efficiency**	**Economizer Type (if present)**	**Status[1]**
AC-A1	SZVAVAC (Packaged3Phase)	1	73	0	AFUE	81.0	47	SEER/EER	17.50/13.00	DifferentialEnthalpy	N

[1] *Status: N - New, A – Altered, E – Existing*

H2. FAN SYSTEMS SUMMARY

1	2	3	4	5		6	7	8	9	10	11	12	13	14
		Design OA	Supply Fan						Return Fan					
Name or Item Tag	**Qty**	**CFM**	**CFM**	**Modeling Method**		**Power**	**Power Units**	**Control**	**CFM**	**Modeling Method**		**Power**	**Power Units**	**Control**	**Status[1]**
AC-A1	1	43	1400	BrakeHorsePower		0.500	bhp	VariableSpeedDrive	NA	NA		NA	NA	NA	N

[1] *Status: N - New, A – Altered, E – Existing*

H3. EXHAUST FAN SUMMARY

1	2	3	4	5	6	7	8
System ID	**Zone Name**	**Qty**	**CFM**	**Motor BHP**	**Power Per Flow (W/cfm)**	**Total Static Pressure (in. H_2O)**	**Status[1]**
GIRLS & MENS LOCKERS1	1-GIRLS & MENS LOCKERS	1	250	0.250	0.872	4.12	N

[1] *Status: N - New, A – Altered, E – Existing*

H4. Wet System Equipment(boilers,chillers,cooling towers,etc.)

This Section Does Not Apply

H5. PUMPS

This Section Does Not Apply

Project Name:	HIGHLAND HS POOL - BLDG A	NRCC-PRF-01-E	Page 7 of 11
Project Address:	39055 25th St W. PALMDALE 93551	Calculation Date/Time:	08:42, Thu, Mar 23, 2023
Input File Name:	Highland HS - Swimming Pool - Bldg A - Title 24.cibd19x		

H6. SYSTEM SPECIAL FEATURES

1	2	3	4
System Name	**Equipment Type**	**Window Interlocks per §140.4(n)**	**Other Special Features and Controls**
AC-A1	SZVAVAC	NA	Zones With CO2Sensor Vent. Control Differential Enthalpy Economizer

Notes: This table includes controls related to the performance path only. For projects using the prescriptive path, mandatory and prescriptive controls requirements are documented on the NRCC-MCH-E.

H7. NONRESIDENTIAL VENTILATION

1	2	3	4	5	6	7
	Mechanical Ventilation					
Zone Name	**Ventilation Function**	**# of people**	**Supply OA CFM**	**Exhaust CFM**	**Conditioned Area (sf)**	**DCV or Occupant Sensor Controls, or Both**
1-GIRLS & MENS LOCKERS	Exhaust - All other locker rooms Office - Office space Misc - All others	6.02	43	250	788	DCV

H8. HIGH-RISE RESIDENTIAL DWELLING UNIT AND HOTEL/MOTEL VENTILATION

This Section Does Not Apply

H9. ZONAL SYSTEM AND TERMINAL UNIT SUMMARY

1	2	3	4	5	6	7	8	9	10	11	12	13
				Rated Capacity (kBtuh)		Airflow (cfm)			Fan			
System ID	**Zone Name**	**System Type**	**Qty**	**Heating**	**Cooling**	**Design**	**Min.**	**Min. Ratio**	**Power**	**Power Units**	**Cycles**	**VSD**
1-GIRLS & MENS LOCKERS-Trm	1-GIRLS & MENS LOCKERS	VAVNoReheatBox	1	NA	NA	1400	462	0.33	0.500	bhp	NA	☐

H10. EVAPORATIVE COOLER SUMMARY

This Section Does Not Apply

H11. HEAT RECOVERY SUMMARY

This Section Does Not Apply

Project Name:	HIGHLAND HS POOL - BLDG A	NRCC-PRF-01-E	Page 8 of 11
Project Address:	39055 25th St W. PALMDALE 93551	Calculation Date/Time:	08:42, Thu, Mar 23, 2023
Input File Name:	Highland HS - Swimming Pool - Bldg A - Title 24.cibd19x		

Project Name:	HIGHLAND HS POOL - BLDG A	NRCC-PRF-01-E	Page 9 of 11
Project Address:	39055 25th St W. PALMDALE 93551	Calculation Date/Time:	08:42, Thu, Mar 23, 2023
Input File Name:	Highland HS - Swimming Pool - Bldg A - Title 24.cibd19x		

L. DECLARATION OF REQUIRED CERTIFICATES OF INSTALLATION

Table Instructions: Selections shall be made by Documentation Author to indicate which Certificates of Installation must be submitted for the features to be recognized for compliance. These documents bust be retained and provided to the building inspector during construction and can be found online at:
https://www.energy.ca.gov/title24/2019standards/2019_compliance_documents/Nonresidential_Documents/NRCI/

Building Component	Form/Title
Envelope	NRCI-ENV-01-E - Must be submitted for all buildings
Mechanical	NRCI-MCH-01-E - Must be submitted for all buildings

IDENTIFICATION STAMP
DIV. OF THE STATE ARCHITECT
APP: 03-122664 INC:
REVIEWED FOR
SS ☑ FLS ☑ ACS ☑
DATE: 05/12/2023

pjhm architects
LICENSED ARCHITECT
JAMES W. RAMSEY
NO. C15585
REN. 02/25
STATE OF CALIFORNIA
REGISTERED PROFESSIONAL ENGINEER
JOSEPH E. [illegible]
No. 27963
Exp. 6/30/24
MECHANICAL
STATE OF CALIFORNIA
Engineous Group, Inc.
896 N. Fair Oaks Ave., Suite E
Pasadena, CA 91103
Phone: (626) 696-3650
LA Office: 837 Traction Avenue, #410, Los Angeles, CA 90013 • LA Phone: 213.278.0172 • Web: pjhm.com
SD Office: 804 Pier View Way #103, Oceanside, CA 92054 • SD Phone: 760.730.5527
OC Office: 24461 Ridge Route Drive #100, Laguna Hills, CA 92653 • OC Phone: 949.496.6191

HIGHLAND HIGH SCHOOL
50M POOL & AQUATICS CENTER

KERN HIGH SCHOOL DISTRICT

HVAC TITLE 24 - BUILDING A

M-0.1

3/31/2023 7:45:37 AM

M. DECLARATION OF REQUIRED CERTIFICATES OF ACCEPTANCE

Table Instructions: Selections shall be made by Documentation Author to indicate which Certificates of Acceptance must be submitted for the features to be recognized for compliance. These documents must be provided to the building inspector during construction and must be completed through an Acceptance Test Technician Certification Provider (ATTCP). For more information visit:https://www.energy.ca.gov/title24/2019standards/2019_compliance_documents/Nonresidential_Documents/NRCA/

Building Component	Form/Title
Envelope	NRCA-ENV-02-F - NRFC label verification for fenestration
Mechanical	NRCA-MCH-02-A Outdoor Air must be submitted for all newly installed HVAC units. Note: MCH02-A can be performed in conjunction with MCH-07-A Supply Fan VFD Acceptance (if applicable) since testing activities overlap
	NRCA-MCH-05-A Air Economizer Controls
	NRCA-MCH-06-A Demand Control Ventilation Systems Acceptance must be submitted for all systems required to employ demand controlled ventilation (refer to §120.1(c)3) can vary outside ventilation flow rates based on maintaining interior carbon dioxide (CO2) concentration setpoints
	NRCA-MCH-07-A Supply Fan Variable Flow Controls
	NRCA-MCH-11-A Automatic Demand Shed Controls
	NRCA-MCH-13-A Automatic FDD for Air Handling Units and Zone Terminal Units Acceptance
	NRCA-MCH-16-A Supply Air Temperature Reset Controls

DOCUMENTATION AUTHOR'S DECLARATION STATEMENT

I certify that this Certificate of Compliance documentation is accurate and complete.

Documentation Author Name: Bradley Severson	Signature:
Company: Engineous Group, Inc.	
Address: 898 N Fair Oaks Ave, Suite E	Signature Date: 2023-03-23
City/State/Zip: Pasadena CA 91103	CEA/ HERS Certification Identification (if applicable):
Phone: 626 696 3850	

RESPONSIBLE PERSON'S DECLARATION STATEMENT

I certify the following under penalty of perjury, under the laws of the State of California:

1. The information provided on this Certificate of Compliance is true and correct.
2. I am eligible under Division 3 of the Business and Professions Code to accept responsibility for the building design or system design identified on this Certificate of Compliance (responsible designer)
3. The energy features and performance specifications, materials, components, and manufactured devices for the building design or system design identified on this Certificate of Compliance conform to the requirements of Title 24, Part 1 and Part 6 of the California Code of Regulations.
4. The building design features or system design features identified on this Certificate of Compliance are consistent with the information provided on other applicable compliance documents, worksheets, calculations, plans and specifications submitted to the enforcement agency for approval with this building permit application.
5. I will ensure that a completed signed copy of this Certificate of Compliance shall be made available with the building permit(s) issued for the building, and made available to the enforcement agency for all applicable inspections. I understand that a completed signed copy of this Certificate of Compliance is required to be included with the documentation the builder provides to the building owner at occupancy.

Responsible Envelope Designer Name:	Signature:	
Company: pjhm architects		
Address: 24461 Ridge Route Drive, Suite 100	Date Signed:	
City/State/Zip: Laguna Hills CA 92653		
Phone: 949 496 6191	Title:	License #:
Responsible Lighting Designer Name:	Signature: NOT IN SCOPE	
Company:		
Address:	Date Signed:	
City/State/Zip:		
Phone:	Title:	License #:
Responsible Mechanical Designer Name: Bradley Severson	Signature:	
Company: Engineous Group Inc.		
Address: 898 N. Fair Oaks, Suite E	Date Signed: 2023-03-23	
City/State/Zip: Pasadena CA 91103		
Phone: 626 714 7506	Title:	License #: M27963

IDENTIFICATION STAMP
DIV. OF THE STATE ARCHITECT
APP: 03-122664 INC:
REVIEWED FOR
SS ☑ FLS ☑ ACS ☑
DATE: 05/12/2023

pjhm architects

LICENSED ARCHITECT
ANDREW W. RHINE
NO. C15585
REN. 02/25
STATE OF CALIFORNIA

REGISTERED PROFESSIONAL ENGINEER
BRADLEY E. SEVERSON
M. 27963
Exp. 6/30/24
MECHANICAL
STATE OF CALIFORNIA

Engineous Group, Inc.
898 N. Fair Oaks Ave., Suite E
Pasadena, CA 91103
Phone: (626) 696-3850

OC Office: 24461 Ridge Route Drive #100, Laguna Hills, CA 92653 • OC Phone: 949.496.6191 • SD Office: 804 Pier View Way #103, Oceanside, CA 92054 • SD Phone: 760.730.5527 • LA Office: 837 Traction Avenue, #410, Los Angeles, CA 90013 • LA Phone: 213.278.0172 • Web: pjhm.com

HIGHLAND HIGH SCHOOL
50M POOL & AQUATICS CENTER

KERN HIGH SCHOOL DISTRICT

HVAC TITLE 24 - BUILDING A

M-0.2

3/31/2023 7:45:43 AM

Project Name:	HIGHLAND HS POOL - BLDG B	NRCC-PRF-01-E	Page 1 of 11
Project Address:	39055 25th St W. PALMDALE 93551	Calculation Date/Time:	08:49, Thu, Mar 23, 2023
Input File Name:	Highland HS - Swimming Pool - Bldg B - Title 24.cibd19x		

A. GENERAL INFORMATION

1	Project Location (city)	PALMDALE	8	Standards Version	Compliance2019
2	CA Zip Code	93551	9	Compliance Software (version)	EnergyPro 8.3
3	Climate Zone	14	10	Weather File	PALMDALE_723820_CZ2010.epw
4	Total Conditioned Floor Area in Scope	961 ft²	11	Building Orientation (deg)	(N) 0 deg
5	Total Unconditioned Floor Area	3 ft²	12	Permitted Scope of Work	NewEnvelopeAndMechanical
6	Total # of Stories (Habitable Above Grade)	1	13	Building Type(s)	Nonresidential
7	Total # of dwelling units	0	14	Gas Type	NaturalGas

B. PROJECT SUMMARY

Table Instructions: Table B shows which building components are included in the performance calculation. If indicated as not included, the project must show compliance prescriptively if within permit application.

Building Components Complying via Performance					Building Components Complying Prescriptively	
Envelope (see Table G)	☒ Performance	Covered Process: Commercial Kitchens	☐ Performance		*The following building components are ONLY eligible for prescriptive compliance and should be documented on the NRCC form listed if within the scope of the permit application (i.e. compliance will not be shown on the NRCC-PRF-E).*	
	☐ Not Included		☒ Not Included			
Mechanical (see Table H)	☒ Performance	Covered Process: Computer Rooms	☐ Performance		Indoor Lighting (Unconditioned)§140.6	*NRCC-LTI-E*
	☐ Not Included		☒ Not Included		Outdoor Lighting §140.7	*NRCC-LTO-E*
Domestic Hot Water (see Table I)	☐ Performance	Covered Process: Laboratory Exhaust	☐ Performance		Sign Lighting §140.8	*NRCC -LTS-E*
	☒ Not Included		☒ Not Included		Mandatory Measures	
Lighting (Indoor Conditioned, see Table K)	☐ Performance				*Electrical power systems, commissioning, solar ready, elevator and escalator requirements are mandatory and should on the NRCC form listed if applicable (i.e. compliance will not be shown on the NRCC-PRF-E.)*	
	☒ Not Included				Electrical Power Distribution §110.11	*NRCC-ELC-E*
Solar Thermal Water Heating (see Table I)	☐ Performance				Commissioning §120.8	*NRCC-CXR-E*
	☒ Not Included				Solar Ready §110.10	*NRCC-SRA-E*

Project Name:	HIGHLAND HS POOL - BLDG B	NRCC-PRF-01-E	Page 2 of 11
Project Address:	39055 25th St W. PALMDALE 93551	Calculation Date/Time:	08:49, Thu, Mar 23, 2023
Input File Name:	Highland HS - Swimming Pool - Bldg B - Title 24.cibd19x		

C1. COMPLIANCE RESULTS FOR PERFORMANCE COMPONENTS (Annual TDV Energy Use, kBtu/ft ²-yr)

COMPLIES

Energy Component	Standard Design (TDV)	Proposed Design (TDV)	Compliance Margin (TDV)[1]
Space Heating	26.80	42.59	-15.79
Space Cooling	132.81	115.24	17.57
Indoor Fans	156.87	94.44	62.43
Heat Rejection	--	--	--
Pumps & Misc.	--	--	--
Domestic Hot Water	24.10	24.09	0.01
Indoor Lighting	41.46	41.46	--
ENERGY STANDARDS COMPLIANCE TOTAL	**382.04**	**317.82**	**64.22 (16.8%)**

[1] *Notes: The number in parenthesis following the Compliance Margin in column 4, represents the Percent Better than Standard.*

C2. RESULTS FOR 'ABOVE CODE' QUALIFICATIONS[1]

☐ This project is pursuing CalGreen Tier 1 ☐ This project is pursuing CalGreen Tier 2

Miscellaneous Energy Component	Standard Design (TDV)	Proposed Design (TDV)	Compliance Margin (TDV)[1]
Receptacle	76.50	76.50	--
Process	--	--	--
Other Ltg	0.07	0.07	--
Process Motors	--	--	--
COMPLIANCE TOTAL PLUS MISCELLANEOUS COMPONENTS	**458.61**	**394.39**	**64.2 (14.0%)**

[1] *Notes: This table is used to document compliance with programs OTHER THAN Title 24 Part 6, if applicable.*

Project Name:	HIGHLAND HS POOL - BLDG B	NRCC-PRF-01-E	Page 3 of 11
Project Address:	39055 25th St W. PALMDALE 93551	Calculation Date/Time:	08:49, Thu, Mar 23, 2023
Input File Name:	Highland HS - Swimming Pool - Bldg B - Title 24.cibd19x		

C3. ENERGY USE SUMMARY

Energy Component	Standard Design Site (MWh)	Proposed Design Site (MWh)	Margin (MWh)	Standard Design Site (MBtu)	Proposed Design Site (MBtu)	Margin (MBtu)
Space Heating	--	--	--	12.5	19.7	-7.2
Space Cooling	3.0	2.4	0.6	--	--	--
Indoor Fans	5.0	2.9	2.1	--	--	--
Heat Rejection	--	--	--	--	--	--
Pumps & Misc.	--	--	--	--	--	--
Domestic Hot Water	--	--	--	12.8	12.8	0.0
Indoor Lighting	1.4	1.4	0.0	--	--	-->
Compliance Total	**9.4**	**6.7**	**2.7**	**25.3**	**32.5**	**-7.2**
Receptacle	2.6	2.6	0.0	--	--	--
Process	--	--	--	--	--	--
Other Ltg	0.0	0.0	--	--	--	--
Process Motors	--	--	--	--	--	--
TOTAL	**12.0**	**9.3**	**2.7**	**25.3**	**32.5**	**-7.2**

D. EXCEPTIONAL CONDITIONS

This project includes partial performance compliance scope options. The building must show compliance with all other applicable compliance scope options (performance or prescriptively) before occupying.

The building does not include service water heating. Verify that service water heating is not required and is not included in the design.

This project uses the Simplified Geometry Performance Modeling Approach which is not capable of modeling daylighting controls and assumes the prescriptive Secondary Daylit Control requirements are met. PRESCRIPTIVE COMPLIANCE documentation (form NRCC-LTI-02-E) for the requirements of section 140.6(d) Automatic Daylighting Controls in Secondary Daylit Zones is required.

E. HERS VERIFICATION

This Section Does Not Apply

Project Name:	HIGHLAND HS POOL - BLDG B	NRCC-PRF-01-E	Page 4 of 11
Project Address:	39055 25th St W. PALMDALE 93551	Calculation Date/Time:	08:49, Thu, Mar 23, 2023
Input File Name:	Highland HS - Swimming Pool - Bldg B - Title 24.cibd19x		

G1. ENVELOPE GENERAL INFORMATION (conditioned spaces only)

1	2	3	4
Opaque Surfaces & Orientation	**Total Gross Surface Area (ft²)**	**Total Fenestration Area (ft²)**	**Window to Wall Ratio (%)**
North-Facing[1]	0 ft²	0 ft²	00.0%
East-Facing[2]	719 ft²	136 ft²	18.9%
South-Facing[3]	0 ft²	0 ft²	00.0%
West-Facing[4]	660 ft²	0 ft²	00.0%
Total	**1,379 ft²**	**136 ft²**	**09.9%**
Roof	961 ft²	0 ft²	00.0%

Notes:
[1] *North-Facing is oriented to within 45 degrees of true north, including 45°00'00" east of north (NE), but excluding 45°00'00" west of north (NW).*
[2] *East-Facing is oriented to within 45 degrees of true east, including 45°00'00" south of east (SE), but excluding 45°00'00" north of east (NE).*
[3] *South-Facing is oriented to within 45 degrees of true south, including 45°00'00" west of south (SW), but excluding 45°00'00" east of south (SE).*
[4] *West-Facing is oriented to within 45 degrees of true west, including 45°00'00" north of due west (NW), but excluding 45°00'00" south of west (SW).*

G3. OPAQUE SURFACE ASSEMBLY SUMMARY

1	2	3	4	5	6	7	8	9	10
Surface Name	**Surface Type**	**Area (ft²)**	**Framing Type**	**Cavity R-Value**	**Continuous R-Value**	**Units**	**Value**	**Description of Assembly Layers**	**Status[1]**
Slab On Grade6	UndergroundFloor	964	NA	0	NA	F-Factor	0.73	Slab Type = UnheatedSlabOnGrade Insulation Orientation = None Insulation R-Value = R0	N
8 CMU Wall8	ExteriorWall	1379	NA	0	NA	U-Factor	0.379	Concrete - Part Grouted and Empty - 125 lb/ft3 - 8 in.	N
R-21 Wall18	InteriorWall	270	Wood	21	NA	U-Factor	0.066	Stucco - 7/8 in. Vapor permeable felt - 1/8 in. Wood framed wall, 16in. OC, 5.5in., R-21 Gypsum Board - 1/2 in.	N

Project Name:	HIGHLAND HS POOL - BLDG B	NRCC-PRF-01-E	Page 5 of 11
Project Address:	39055 25th St W. PALMDALE 93551	Calculation Date/Time:	08:49, Thu, Mar 23, 2023
Input File Name:	Highland HS - Swimming Pool - Bldg B - Title 24.cibd19x		

G3. OPAQUE SURFACE ASSEMBLY SUMMARY

1	2	3	4	5	6	7	8	9	10
Surface Name	**Surface Type**	**Area (ft²)**	**Framing Type**	**Cavity R-Value**	**Continuous R-Value**	**Units**	**Value**	**Description of Assembly Layers**	**Status[1]**
R-30 Roof No Attic21	Roof	961	Wood	30	NA	U-Factor	0.034	Asphalt shingles - 1/4 in. Vapor permeable felt - 1/8 in. Plywood - 1/2 in. Air - Cavity - Wall Roof Ceiling - 4 in. or more Wood framed roof, 16in. OC, 11.25in., R-30 Gypsum Board - 1/2 in.	N

[1] *Status: N - New, A – Altered, E – Existing*

G4. OPAQUE DOOR SUMMARY

1	2	3
Assembly Name	**Overall U-factor**	**Status[1]**
Metal Door16	0.700	N

G5. FENESTRATION ASSEMBLY SUMMARY

1	2	3	4	5	6	7	8	9
Fenestration Assembly Name / Tag or I.D.	**Fenestration Type / Product Type / Frame Type**	**Certification Method[1]**	**Assembly Method**	**Area ft²**	**Overall U-factor**	**Overall SHGC**	**Overall VT**	**Status[2]**
NFRC Labeled Storefront (NEW)	VerticalFenestration CurtainWall N/A	NFRC Rated	SiteBuilt	136	0.41	0.26	0.46	N

[1] *Newly installed fenestration shall have a certified NFRC Label Certificate or use the CEC default tables found in Table 110.6-A and Table 110.6-B. Center of Glass (COG) values are for the glass-only, determined by the manufacturer, and are shown for ease of verification. Site-built fenestration values are calculated per Nonresidential Appendix NA6 and are used in the analysis.*
[2] *Status: N – New, A – Altered, E – Existing*

Project Name:	HIGHLAND HS POOL - BLDG B	NRCC-PRF-01-E	Page 6 of 11
Project Address:	39055 25th St W. PALMDALE 93551	Calculation Date/Time:	08:49, Thu, Mar 23, 2023
Input File Name:	Highland HS - Swimming Pool - Bldg B - Title 24.cibd19x		

H1. DRY SYSTEM EQUIPMENT (furnaces, air handling units, heat pumps, VRF, economizers etc.)

1	2	3	4	5	6	7	8	9	10	11	12
			Heating				Cooling				
Equipment Name	**Equipment Type**	**Qty**	**Total Heating Output (kBtu/h)**	**Supp Heat Output (kBtuh)**	**Efficiency Unit**	**Efficiency**	**Total Cooling Output (kBtu/h)**	**Efficiency Unit**	**Efficiency**	**Economizer Type (if present)**	**Status[1]**
AC-B1	SZVAVAC (Packaged3Phase)	1	49	0	AFUE	81.0	58	SEER/EER	17.50/12.90	DifferentialEnthalpy	N

[1] *Status: N - New, A – Altered, E – Existing*

H2. FAN SYSTEMS SUMMARY

1	2	3	4	5		6	7	8	9	10	11	12	13	14
		Design OA	Supply Fan						Return Fan					
Name or Item Tag	**Qty**	**CFM**	**CFM**	**Modeling Method**		**Power**	**Power Units**	**Control**	**CFM**	**Modeling Method**		**Power**	**Power Units**	**Control**	**Status[1]**
AC-B1	1	360	2000	BrakeHorsePower		0.810	bhp	VariableSpeedDrive	NA	NA		NA	NA	NA	N

[1] *Status: N - New, A – Altered, E – Existing*

H3. EXHAUST FAN SUMMARY

This Section Does Not Apply

H4. Wet System Equipment(boilers,chillers,cooling towers,etc.)

This Section Does Not Apply

H5. PUMPS

This Section Does Not Apply

Project Name:	HIGHLAND HS POOL - BLDG B	NRCC-PRF-01-E	Page 7 of 11
Project Address:	39055 25th St W. PALMDALE 93551	Calculation Date/Time:	08:49, Thu, Mar 23, 2023
Input File Name:	Highland HS - Swimming Pool - Bldg B - Title 24.cibd19x		

H6. SYSTEM SPECIAL FEATURES

1	2	3	4
System Name	**Equipment Type**	**Window Interlocks per §140.4(n)**	**Other Special Features and Controls**
AC-B1	SZVAVAC	NA	Zones With CO2Sensor Vent. Control Differential Enthalpy Economizer

Notes: This table includes controls related to the performance path only. For projects using the prescriptive path, mandatory and prescriptive controls requirements are documented on the NRCC-MCH-E.

H7. NONRESIDENTIAL VENTILATION

1	2	3	4	5	6	7
	Mechanical Ventilation					
Zone Name	**Ventilation Function**	**# of people**	**Supply OA CFM**	**Exhaust CFM**	**Conditioned Area (sf)**	**DCV or Occupant Sensor Controls, or Both**
1-CLASSROOM	Misc - All others	24.02	360	0	961	DCV

H8. HIGH-RISE RESIDENTIAL DWELLING UNIT AND HOTEL/MOTEL VENTILATION

This Section Does Not Apply

H9. ZONAL SYSTEM AND TERMINAL UNIT SUMMARY

1	2	3	4	5	6	7	8	9	10	11	12	13
				Rated Capacity (kBtuh)		Airflow (cfm)			Fan			
System ID	**Zone Name**	**System Type**	**Qty**	**Heating**	**Cooling**	**Design**	**Min.**	**Min. Ratio**	**Power**	**Power Units**	**Cycles**	**VSD**
1-CLASSROOM-Trm	1-CLASSROOM	VAVNoReheatBox	1	NA	NA	2000	660	0.33	0.810	bhp	NA	☐

H10. EVAPORATIVE COOLER SUMMARY

This Section Does Not Apply

H11. HEAT RECOVERY SUMMARY

This Section Does Not Apply

Project Name:	HIGHLAND HS POOL - BLDG B	NRCC-PRF-01-E	Page 8 of 11
Project Address:	39055 25th St W. PALMDALE 93551	Calculation Date/Time:	08:49, Thu, Mar 23, 2023
Input File Name:	Highland HS - Swimming Pool - Bldg B - Title 24.cibd19x		

Project Name:	HIGHLAND HS POOL - BLDG B	NRCC-PRF-01-E	Page 9 of 11
Project Address:	39055 25th St W. PALMDALE 93551	Calculation Date/Time:	08:49, Thu, Mar 23, 2023
Input File Name:	Highland HS - Swimming Pool - Bldg B - Title 24.cibd19x		

L. DECLARATION OF REQUIRED CERTIFICATES OF INSTALLATION

Table Instructions: Selections shall be made by Documentation Author to indicate which Certificates of Installation must be submitted for the features to be recognized for compliance. These documents bust be retained and provided to the building inspector during construction and can be found online at:
https://www.energy.ca.gov/title24/2019standards/2019_compliance_documents/Nonresidential_Documents/NRCI/

Building Component	Form/Title
Envelope	NRCI-ENV-01-E - Must be submitted for all buildings
Mechanical	NRCI-MCH-01-E - Must be submitted for all buildings

IDENTIFICATION STAMP
DIV. OF THE STATE ARCHITECT
APP: 03-122664 INC:
REVIEWED FOR
SS ☑ FLS ☑ ACS ☑
DATE: 05/12/2023

pjhm architects
LA Phone: 213.278.0172 • Web: pjhm.com
LA Office: 837 Traction Avenue, #410, Los Angeles, CA 90013
SD Phone: 760.730.5527 • SD Office: 804 Pier View Way #103, Oceanside, CA 92054
OC Phone: 949.496.6191 • OC Office: 24461 Ridge Route Drive #100, Laguna Hills, CA 92653

LICENSED ARCHITECT
ANDREW W. PJHM
NO. C15585
REN. 02/25
STATE OF CALIFORNIA

REGISTERED PROFESSIONAL ENGINEER
ROBERT E. [illegible]
NO. 27963
Exp. 6/30/24
MECHANICAL
STATE OF CALIFORNIA

Engineous Group, Inc.
896 N. Fair Oaks Ave., Suite E
Pasadena, CA 91103
Phone: (626) 696-3650

HIGHLAND HIGH SCHOOL
50M POOL & AQUATICS CENTER

KERN HIGH SCHOOL DISTRICT

HVAC TITLE 24 - BUILDING B

M-0.3

3/31/2023 7:45:58 AM

Project Name:	HIGHLAND HS POOL - BLDG B	NRCC-PRF-01-E	Page 10 of 11
Project Address:	39055 25th St W. PALMDALE 93551	Calculation Date/Time:	08:49, Thu, Mar 23, 2023
Input File Name:	Highland HS - Swimming Pool - Bldg B - Title 24.cibd19x		

M. DECLARATION OF REQUIRED CERTIFICATES OF ACCEPTANCE

Table Instructions: Selections shall be made by Documentation Author to indicate which Certificates of Acceptance must be submitted for the features to be recognized for compliance. These documents must be provided to the building inspector during construction and must be completed through an Acceptance Test Technician Certification Provider (ATTCP). For more information visit:https://www.energy.ca.gov/title24/2019standards/2019_compliance_documents/Nonresidential_Documents/NRCA/

Building Component	Form/Title
Envelope	NRCA-ENV-02-F - NRFC label verification for fenestration
Mechanical	NRCA-MCH-02-A Outdoor Air must be submitted for all newly installed HVAC units. Note: MCH02-A can be performed in conjunction with MCH-07-A Supply Fan VFD Acceptance (if applicable) since testing activities overlap
	NRCA-MCH-05-A Air Economizer Controls
	NRCA-MCH-06-A Demand Control Ventilation Systems Acceptance must be submitted for all systems required to employ demand controlled ventilation (refer to §120.1(c)3) can vary outside ventilation flow rates based on maintaining interior carbon dioxide (CO2) concentration setpoints
	NRCA-MCH-07-A Supply Fan Variable Flow Controls
	NRCA-MCH-12-A FDD for Packaged Direct Expansion Units
	NRCA-MCH-13-A Automatic FDD for Air Handling Units and Zone Terminal Units Acceptance
	NRCA-MCH-16-A Supply Air Temperature Reset Controls

Project Name:	HIGHLAND HS POOL - BLDG B	NRCC-PRF-01-E	Page 11 of 11
Project Address:	39055 25th St W. PALMDALE 93551	Calculation Date/Time:	08:49, Thu, Mar 23, 2023
Input File Name:	Highland HS - Swimming Pool - Bldg B - Title 24.cibd19x		

DOCUMENTATION AUTHOR'S DECLARATION STATEMENT

I certify that this Certificate of Compliance documentation is accurate and complete.

Documentation Author Name: Bradley Severson	Signature:
Company: Engineous Group, Inc.	
Address: 898 N Fair Oaks Ave, Suite E	Signature Date: 2023-03-23
City/State/Zip: Pasadena CA 91103	CEA/ HERS Certification Identification (if applicable):
Phone: 626 696 3850	

RESPONSIBLE PERSON'S DECLARATION STATEMENT

I certify the following under penalty of perjury, under the laws of the State of California:

1. The information provided on this Certificate of Compliance is true and correct.
2. I am eligible under Division 3 of the Business and Professions Code to accept responsibility for the building design or system design identified on this Certificate of Compliance (responsible designer)
3. The energy features and performance specifications, materials, components, and manufactured devices for the building design or system design identified on this Certificate of Compliance conform to the requirements of Title 24, Part 1 and Part 6 of the California Code of Regulations.
4. The building design features or system design features identified on this Certificate of Compliance are consistent with the information provided on other applicable compliance documents, worksheets, calculations, plans and specifications submitted to the enforcement agency for approval with this building permit application.
5. I will ensure that a completed signed copy of this Certificate of Compliance shall be made available with the building permit(s) issued for the building, and made available to the enforcement agency for all applicable inspections. I understand that a completed signed copy of this Certificate of Compliance is required to be included with the documentation the builder provides to the building owner at occupancy.

Responsible Envelope Designer Name:	Signature:	
Company: pjhm architects		
Address: 24461 Ridge Route Drive, Suite 100	Date Signed:	
City/State/Zip: Laguna Hills CA 92653		
Phone: 949 496 6191	Title:	License #:
Responsible Lighting Designer Name:	Signature: NOT IN SCOPE	
Company:		
Address:	Date Signed:	
City/State/Zip:		
Phone:	Title:	License #:
Responsible Mechanical Designer Name: Bradley Severson	Signature:	
Company: Engineous Group Inc.		
Address: 898 N. Fair Oaks, Suite E	Date Signed: 2023-03-23	
City/State/Zip: Pasadena CA 91103		
Phone: 626 714 7506	Title:	License #: M27963

IDENTIFICATION STAMP
DIV. OF THE STATE ARCHITECT
APP: 03-122664 INC:
REVIEWED FOR
SS ☑ FLS ☑ ACS ☑
DATE: 05/12/2023

pjhm architects
LA Office: 837 Traction Avenue, #410, Los Angeles, CA 90013 • LA Phone: 213.278.0172 • Web: pjhm.com
SD Phone: 760.730.5527 • OC Office: 24461 Ridge Route Drive #100, Laguna Hills, CA 92653 • OC Phone: 949.496.6191 • SD Office: 804 Pier View Way #103, Oceanside, CA 92054

LICENSED ARCHITECT
ANDREW W. RAMSEY
NO. C15585
REN. 02/25
STATE OF CALIFORNIA

REGISTERED PROFESSIONAL ENGINEER
BRADLEY E. SEVERSON
NO. 27963
Exp. 6/30/24
MECHANICAL
STATE OF CALIFORNIA

Engineous Group, Inc.
898 N. Fair Oaks Ave., Suite E
Pasadena, CA 91103
Phone: (626) 696-3850

HIGHLAND HIGH SCHOOL
50M POOL & AQUATICS CENTER

KERN HIGH SCHOOL DISTRICT

HVAC TITLE 24 - BUILDING B

M-0.4

3/31/2023 7:46:01 AM

ROOF MOUNTED AIR CONDITIONING UNIT SCHEDULE

UNIT	NOM. TONS	MAKE	MODEL	COOLING CAPACITY (BTUH)	EER	SEER	HEATING CAPACITY (BTUH)		SA CFM	ESP (IN)	RA CFM	MIN. OA CFM	MOTOR		ELECTRICAL DATA					UNIT WT. (LBS)	14" TALL CURB WT. (LBS)	REMARKS							
							INPUT	OUTPUT					HP	BHP	AC UNIT V	PH	HZ	MCA	MOP			1	2	3	4	5	6	7	8
AC-A1	4	TRANE	YHC047E3RYA	48850	-	17.5	90000	72900	1400	0.65	-	500	-	0.5	208	3	60	30	40	983	135	X	X	X		X	X	X	X
AC-B1	5	TRANE	YZC060E3RXA	60770	-	19.6	60000	49000	2000	0.65	-	400	-	0.81	208	3	60	26	40	892	135	X	X	X	X	X	X	X	X

REMARKS:

1. PROVIDE AC UNIT AUTOMATIC SHUTOFF VIA TOTAL AREA COVERAGE SMOKE DETECTION SYSTEM SIGNAL FROM FIRE ALARM CONTROL PANEL (PER 2019 CMC SECTION 608.1, EXCEPTION 1), SEE ELECTRICAL DRAWING.
2. ENTHALPY CONTROLLED ECONOMIZER
3. FACTORY MODULATING POWER EXHAUST
4. CO2 BASED DEMAND CONTROL VENTILATION
5. 14" HI FACTORY ROOF CURB
6. EMS - CONTROL W/ DISTRICT STANDARD EMS
7. W/ FAULT DETECTION & DIAGNOSTICS
8. PROVIDE HINGED ACCESS PANELS

EXHAUST FAN SCHEDULE

UNIT	MAKE	MODEL	FAN TYPE	ELECTRICAL DATA				TOTAL CFM	ESP (IN)	SONES	OPER. WT. (LBS)	REMARKS									
				HP	WATTS	V	PH					1	2	3	4	5	6	7	8	9	10
EF-A1	GREENHECK	G-099-VG	ROOFTOP	1/4	-	115	1	500	0.65	7.8	59	X	X	X	X	X					
EF-A2	GREENHECK	G-099-VG	ROOFTOP	1/4	-	115	1	500	0.65	7.8	59	X	X	X	X	X					
EF-A3	GREENHECK	G-097-VG	ROOFTOP	1/4	-	115	1	75	0.375	3.2	59	X	X	X	X	X					
EF-B1	GREENHECK	G-098-VG	ROOFTOP	1/4	-	115	1	300	0.5	5.7	59	X	X	X	X	X					
EF-B2	GREENHECK	G-098-VG	ROOFTOP	1/4	-	115	1	300	0.5	5.7	59	X	X	X	X	X					
EFS-C1	GREENHECK	USF-12	UTILITY SET UPBLAST	1/4	-	115	1	800	0.75	10.6	266						X	X	X		

1. PROVIDED W/ FACTORY FURNISHED ROOF CURB, BACKDRAFT DAMPER
2. WITH VARI-GREEN EC MOTOR
3. SEE DETAIL 1/M-4.3 FOR ANCHORAGE
4. RUN CONTINUOUSLY BASED ON BUILDING OPERATING HOURS ; CONNECT TO EMS TO VERIFY FAN STATUS
5. PROVIDE W/FACTORY SPEED CONTROL
6. SEE DETAIL 5/M-4.2 FOR ANCHORAGE
7. STAINLESS STEEL FAN, WITH VFD MOTOR, PERMATECTOR CONCRETE GRAY-RAL 7023 COATING, STAINLESS STEEL BACKDRAFT, DRAIN CONNECTION, STEEL WEATHERHOOD
8. RUN CONTINUOUSLY ; CONNECT TO EMS TO VERIFY FAN STATUS

Applicable Code: 2019 CBC 02-05-2020 Revised: 02/14/2020

All mechanical, plumbing, and electrical components shall be anchored and installed per the details on the DSA approved construction documents. Where no detail is indicated, the following components shall be anchored or braced to meet the force and displacement requirements prescribed in the 2019 CBC Sections 1617A.1.18 through 1617A.1.26 and ASCE 7-16 Chapter 13, 26 and 30.

1. All permanent equipment and components.
2. Temporary, movable or mobile equipment that is permanently attached (e.g. hard wired) to the building utility services such as electricity, gas or water. "Permanently attached" shall include all electrical connections except plugs for 110/220 volt receptacles having a flexible cable.
3. Temporary, movable or mobile equipment which is heavier than 400 pounds or has a center of mass located 4 feet or more above the adjacent floor or roof level that directly support the component is required to be restrained in a manner approved by DSA.

The following mechanical and electrical components shall be positively attached to the structure but need not demonstrate design compliance with the references noted above. These components shall have flexible connections provided between the component and associated ductwork, piping, and conduit. Flexible connections must allow movement in both transverse and longitudinal directions:

A. Components weighing less than 400 pounds and have a center of mass located 4 feet or less above the adjacent floor or roof level that directly support the component.

B. Components weighing less than 20 pounds, or in the case of distributed systems, less than 5 pounds per foot, which are suspended from a roof or floor or hung from a wall.

The anchorage of all mechanical, electrical and plumbing components shall be subject to the approval of the design professional in general responsible charge or structural engineer delegated responsibility and acceptance by DSA. The project inspector will verify that all components and equipment have been anchored in accordance with the above requirements.

Piping, Ductwork, and Electrical Distribution System Bracing Note

Piping, ductwork, and electrical distribution systems shall be braced to comply with the forces and displacements prescribed in ASCE 7-16 Section 13.3, as defined in ASCE 7-16 Section 13.6.5, 13.6.6, 13.6.7; and 2019 CBC, Sections 1617A.1.24, 1617A.1.25 and 1617A.1.26.

The method of showing bracing and attachments to the structure for the identified distribution system are as noted below. When bracing and attachments are based on a preapproved installation guide (e.g., OSHPD OPM for 2013 CBC or later), copies of the bracing system installation guide or manual shall be available on the jobsite prior to the start of and during the hanging and bracing of the distribution systems. The Structural Engineer of Record shall verify the adequacy of the structure to support the hanger and brace loads.

Mechanical Piping (MP), Mechanical Ducts (MD), Plumbing Piping (PP), Electrical Distribution Systems (E):

MP☒ MD☒ PP☐ E ☐ - Option 1 : Detailed on the approved drawings with project specific notes and details.

MP☐ MD☐ PP☐ E ☐ - Option 2 : Shall comply with the applicable OSHPD Pre-Approval (OPM#) #_____.

POWER EXHAUST ECONOMIZER

UNIT	ELECTRICAL DATA				
	V	PH	HP	FLA	WT (LBS.)
PE-A1	208-230	3	0.5	3.9	183
PE-B1	208-230	3	0.5	3.9	183

GENERAL REQUIREMENTS

1. A. FURNISH ALL LABOR, SUPERVISION, MATERIALS, EQUIPMENT AND FACILITIES NECESSARY TO FURNISH, FABRICATE, DELIVER, STORE AND INSTALL ALL WORK NOTED ON THE DRAWINGS AND/OR SPECIFIED HEREIN.

B. THE CONTRACTOR SHALL FURNISH AND INSTALL ALL WORK NECESSARY TO MAKE A COMPLETE SYSTEM WHETHER OR NOT SUCH DETAILS ARE MENTIONED IN THESE SPECIFICATIONS OR SHOWN ON THE PLANS, BUT WHICH ARE OBVIOUSLY NECESSARY TO MAKE A COMPLETE SYSTEM, EXCEPTING ONLY THOSE PORTIONS THAT ARE SPECIFICALLY MENTIONED HEREIN OR PLAINLY MARKED ON THE ACCOMPANYING DRAWINGS AS BEING INSTALLED UNDER ANOTHER SECTION OF THE SPECIFICATIONS.

2. WORKMANSHIP: THE WORK SHALL BE ACCOMPLISHED IN A THOROUGH AND WORKMAN-LIKE MANNER SATISFACTORY TO AND MEETING THE APPROVAL OF THE OWNER AND ARCHITECT.

3. MATERIALS: ALL MATERIALS AND EQUIPMENT SHALL BE NEW AND THE BEST OF THEIR RESPECTIVE KIND, FREE FROM ALL DEFECTS AND OF THE MAKE AND QUALITY SPECIFIED.

4. SITE INSPECTION: CONTRACTOR SHALL VISIT THE SITE OF WORK PRIOR TO SUB-MISSION OF HIS BID AND THOROUGHLY FAMILIARIZE HIMSELF WITH THE WORKING CONDITIONS & EXACT NATURE OF THE WORK. SUBMISSION OF A BID ACKNOWLEDGES FULL RESPONSIBILITY FOR FURNISHING A COMPLETE AND FUNCTIONAL SYSTEM. NO CHANGES IN CONTRACT WILL BE MADE TO ACCOMMODATE OR ALLOW EXTRA FUNDS FOR ANY OMISSION WHICH RESULTS FROM A FAILURE TO THOROUGHLY MAKE THE EXAMINATION.

5. CODES AND PERMITS: ALL MECHANICAL EQUIPMENT, INSTALLATION, ETC., SHALL CONFORM WITH ALL APPLICABLE CODES AND ORDINANCES AS INTERPRETED BY DSA, INCLUDING CALIFORNIA TITLE 24. CONTRACTOR SHALL OBTAIN AND PAY FOR ALL PERMITS AND INSPECTIONS. COPIES OF ALL PERMITS AND INSPECTION REPORTS SHALL BE SUBMITTED TO THE ARCHITECT.

6. COORDINATION: THE DRAWINGS ARE DIAGRAMMATIC AND INTENDED TO SHOW SCOPE. THE CONTRACTOR SHALL COORDINATE HIS WORK WITH OTHER TRADES TO PROVIDE BEST ARRANGEMENT OF ALL DUCTS, PIPES, CONDUIT, ETC.

7. INSULATION SHALL BE U.L. LISTED IN COMPLIANCE WITH FLAME-SPREAD RATING OF NOT MORE THAN 25 AND SMOKE DENSITY NOT EXCEEDING 50, PER THE CALIFORNIA MECHANICAL CODE. INSTALLATION SHALL BE IN ACCORDANCE WITH THE STATE OF CALIFORNIA ENERGY COMMISSION AND CMC REQUIREMENTS.

8. CONTRACTOR SHALL AFFIX A MAINTENANCE LABEL TO ALL EQUIPMENT REQUIRING ROUTINE MAINTENANCE AND SHALL PROVIDE THREE COPIES OF MAINTENANCE AND OPERATING MANUALS TO THE OWNER.

9. BALANCING AND ADJUSTING: ALL WATER SYSTEMS SHALL BE ADJUSTED BY AN INDEPENDENT BALANCING CONTRACTOR THAT IS A MEMBER OF THE ASSOCIATED AIR BALANCING COUNCIL (AABC). SUBMIT BALANCE REPORT TO OWNER PRIOR TO RECEIVING FINAL PAYMENT.

10. COORDINATE LOCATIONS OF ALL ROOF WALL OPENINGS WITH ALL RELEVANT TRADES, AND PROVIDE WATERTIGHT FLASHINGS WHEREVER PENETRATIONS OCCUR. EXACT LOCATIONS AND SIZES MAY BE DEPENDENT UPON EQUIPMENT SELECTIONS; COORDINATE SIZES AND LOCATIONS OF ALL OPENINGS WITH APPROPRIATE EQUIPMENT REQUIREMENTS.

11. PERMANENT ACCESS TO EQUIPMENT SHALL BE PROVIDED, AND A MINIMUM OF 30" CLEAR WORKING SPACE IN FRONT OF ACCESS PANELS TO THE EQUIPMENT SHALL BE PROVIDED.

12. ALL EQUIPMENT SHALL BE SECURELY FASTENED TO THE BUILDING STRUCTURE.

13. GAS-FIRED EQUIPMENT SHALL BE EQUIPPED WITH A PILOTLESS ELECTRONIC INTERMITTENT IGNITION SYSTEM. GAS FIRED BOILER AND GAS FIRED AC UNITS SHALL MEET ALL SQAMD LO-NOX REQUIREMENTS.

14. EACH PIECE OF EQUIPMENT AND ALL SYSTEMS SHALL BE ADJUSTED AND RE-ADJUSTED TO INSURE PROPER FUNCTION OF ALL CONTROLS, MAINTENANCE OF TEMPERATURE, ADEQUACY OF FLOWS AND CAPACITIES, ELIMINATION OF NOISE AND VIBRATION, AND SHALL BE LEFT IN PROPER OPERATING CONDITION.

15. AIR FILTERS SHALL BE A STATE FIRE MARSHAL APPROVED AND LISTED TYPE. PREFORMED FILTERS HAVING COMBUSTIBLE FRAMING SHALL BE TESTED AS A COMPLETE ASSEMBLY. AIR FILTERS IN ALL OCCUPANCIES SHALL BE CLASS 2 OR BETTER (AS SHOWN IN THE STATE FIRE MARSHAL LISTING). AIR FILTERS SHALL BE ACCESSIBLE FOR CLEANING OR REPLACEMENT.

16. VOLUME DAMPERS SHALL BE PROVIDE IN EACH BRANCH DUCT SERVING EACH REGISTER OR DIFFUSER (SEE SPECIFICATIONS FOR ADDITIONAL INFORMATION).

17. ALL DUCT DIMENSIONS ARE NET INSIDE DIMENSIONS.

APPLICABLE CODES

LIST OF APPLICABLE CODES
2022 CALIFORNIA ADMINISTRATIVE CODE (CAC), PART 1, TITLE 24 CCR
2019 CALIFORNIA BUILDING CODE (CBC), PART 2, TITLE 24 CCR
2019 CALIFORNIA ELECTRICAL CODE (CEC), PART 3, TITLE 24 CCR
2019 CALIFORNIA MECHANICAL CODE (CMC), PART 4, TITLE 24 CCR
2019 CALIFORNIA PLUMBING CODE (CPC), PART 5, TITLE 24 CCR
2019 CALIFORNIA ENERGY CODE, PART 6, TITLE 24 CCR
2019 CALIFORNIA FIRE CODE (CFC), PART 9, TITLE 24 CCR
2019 CALIFORNIA EXISTING BUILDING CODE (CEBC), PART 10, TITLE 24 CCR
2019 CALIFORNIA GREEN BUILDING STANDARDS CODE (CALGREEN), PART 11, TITLE 24 CCR
2019 CALIFORNIA REFERENCED STANDARDS CODE, PART 12, TITLE 24 CCR
TITLE 19 CCR, PUBLIC SAFETY, STATE FIRE MARSHAL REGULATIONS

APPLICABLE STANDARDS
FOR A LIST OF APPLICABLE STANDARDS, INCLUDING CALIFORNIA AMENDMENTS TO THE NFPA STANDARDS, REFER TO CBC CHAPTER 35 AND CFC CHAPTER 80.

HVAC SYMBOL AND ABBREVIATIONS

	SUPPLY AIR DUCT	
	RETURN, TRANSFER,EXHAUST OR BY-PASS AIR DUCT	
	SUPPLY AIR DIFFUSER	S.A
	RETURN AIR REGISTER	R.A.
	TRANSFER AIR REGISTER	T.A.
	EXHAUST AIR REGISTER	E.A
T	AC UNIT THERMOSTAT & ZONE	
	VOLUME DAMPER	V.D.
UC	UNDER CUT DOOR	
D.L.	DOOR LOUVER	D.L.
	DUCT TRANSITION	
CLG	CEILING	
O.A	OUTSIDE AIR	
C.D.	CEILING DIFFUSER	
D.C.D.	DECORATIVE CEILING DIFFUSER	
F.P.	FILLER PANEL	
R.C.G.	RETURN CEILING GRILLE	
R.C.R.	RETURN CEILING REGISTER	
D.R.C.G.	DECORATIVE RETURN CEILING GRILLE	
T.C.G.	TRANSFER CEILING GRILLE	
E.C.G.	EXHAUST CEILING GRILLE	
E.C.R.	EXHAUST CEILING REGISTER	
S.W.G.	SUPPLY WALL GRILLE	
S.W.R.	SUPPLY WALL REGISTER	
R.W.G.	RETURN WALL GRILLE	
R.W.R.	RETURN WALL REGISTER	
T.W.G.	TRANSFER WALL GRILLE	
E.W.G.	EXHAUST WALL GRILLE	
E.W.R.	EXHAUST WALL REGISTER	
F.L.F.D.	FUSIBLE LINK FIRE DAMPER	
A.P.	ACCESS PANEL	
U.L.A.P.	U.L. LISTED ACCESS PANEL	
A.C.	AIR CONDITIONING UNIT	
E.F.	EXHAUST FAN	
GV	GRAVITY VENTILATOR	
FEF	FUME HOOD EXHAUST FAN	
P.O.C.	POINT OF CONNECTION	
A.F.F.	ABOVE FINISHED FLOOR	
AC	AIR CONDITIONING UNIT	
FLR	FLOOR	
C.C.	COOLING UNIT	
HP	HEAT PUMP UNIT	
KEF	KITCHEN HOOD EXHAUST FAN	
KSF	KITCHEN HOOD SUPPLY FAN	
A	FURNISHED AND INSTALLED UNDER THE ARCHITECTURAL DIVISION OF THE SPECIFICATIONS.	
E	FURNISHED AND INSTALLED UNDER THE ELECTRICAL DIVISION OF THE SPECIFICATIONS.	
S	FURNISHED AND INSTALLED UNDER THE STRUCTURAL DIVISION OF THE SPECIFICATIONS.	
	COMBINATION SMOKE/FIRE DAMPER	CSFD
(L) OR	INTERNALLY LINED DUCTWORK	
CO2	CARBON DIOXIDE SENSOR	
OR	S.A. OR R.A. DUCT DROPS	
	E.A. DUCT DROP	

AIR DISTRIBUTION EQUIPMENT KEY

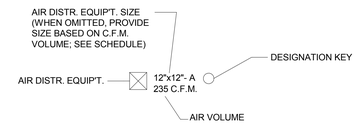

DESIG. KEY	AIR DISTR. EQUIP'T
A	C.D.
B	C.D.F.P.
C	C.D. W/ V.D.
D	C.D.F.P. W/ V.D.
E	S.W.G.
F	S.W.R.
G	D.C.D.
a	R.C.G.
b	R.C.G.F.P.
c	R.C.R.
e	R.W.G.
f	R.W.R.
g	D.R.C.G.
T1	T.C.G.
T2	T.C.G.F.P.
T3	T.W.G.
E1	E.C.G.
E2	E.C.G.F.P.
E3	E.C.R.
E4	E.W.G.
E5	E.W.R.

C.F.M. RANGE	CLG. MTD. EQUIP'T. (SUPPLY, RETURN, TRANSFER & EXHAUST) NECK SIZE	REMARKS
5-100	6"x6"	
105-150	8"x8"	
155-250	10"x10"	
255-400	12"x12"	
405-500	14"x14"	
505-700	16"x16"	
705-900	18"x18"	
905-1100	20"x20"	NOT FOR
1105-1500	22"x22"	C.D.F.P.

NOTE:
ALL CEILING DIFFUSERS ARE TO BE 4-W THROW UNITS UNLESS OTHERWISE NOTED ON DRAWINGS.

IDENTIFICATION STAMP
DIV. OF THE STATE ARCHITECT
APP: 03-122664 INC:
REVIEWED FOR
SS ☑ FLS ☑ ACS ☑
DATE: 05/12/2023

pjhm architects
LA Phone: 213.278.0172 • Web: pjhm.com
LA Office: 837 Traction Avenue, #410, Los Angeles, CA 90013 • SD Office: 804 Pier View Way #103, Oceanside, CA 92054 • SD Phone: 760.730.5527 • OC Phone: 949.496.6191 • OC Office: 24461 Ridge Route Drive #100, Laguna Hills, CA 92653

LICENSED ARCHITECT
THOMAS W. RINGER
NO. C15585
REN. 02/25
STATE OF CALIFORNIA

REGISTERED PROFESSIONAL ENGINEER
ERIC E. JENSEN
NO. 27963
Exp. 6/30/24
MECHANICAL
STATE OF CALIFORNIA

Engineous Group, Inc.
896 N. Fair Oaks Ave., Suite E
Pasadena, CA 91103
Phone: (626) 696-3650

HIGHLAND HIGH SCHOOL
50M POOL & AQUATICS CENTER

KERN HIGH SCHOOL DISTRICT

HVAC EQUIP. SCHEDULE, LEGEND & NOTES

M-1.1

3/31/2023 7:46:02 AM

SPLIT SYSTEM OUTDOOR UNIT SCHEDULE

MARK	MAKE	MODEL	NOMINAL TONS	COOLING		HEATING		COMP HP	FAN RLA	ELECTRICAL DATA						OPER. WT. (LBS)	FAN COIL	REMARKS
				BTU/HR	SEER	BTU/HR	HSPF			V	PH	HZ	FLA	MCA	MOCP			
HP-B1	TRANE/MITSUBISHI	TRUZA0241HA70BA	2.0	24,000	21.4	26,000	11.0	-	-	208/230	1	60	-	19	26	153	FC-B1	1 2 3
HP-B2	TRANE/MITSUBISHI	TRUZA0181KA70BA	1.5	18,000	19.8	19,000	11.2	-	-	208/230	1	60	-	11	28	100	FC-B2	1 2 3
HP-C1	TRANE/MITSUBISHI	TRUZA0361KA70BA	3.0	36,000	18.8	38,000	9.2	-	-	208/230	1	60	-	25	31	214	FC-C1	1 2 3
HP-C2	TRANE/MITSUBISHI	TRUZA0361KA70BA	3.0	36,000	18.8	38,000	9.2	-	-	208/230	1	60	-	25	31	214	FC-C2	1 2 3

1. ON LEVEL PLATFORM, PROVIDE SEISMIC RESTRAINT
2. PROVIDE FACTORY RECOMMENDED ACCESSORIES INCLUDING BUT NOT LIMITED TO SIGHT GLASS, FILTER DRYER, TXV AND COMPRESSOR CRANKCASE HEATER
3. SEE DETAIL 9/M4.2 FOR ANCHORAGE

SPLIT SYSTEM FAN COIL UNIT SCHEDULE

MARK	UNIT CONFIG.	MAKE	MODEL	TONS	TOTAL CFM	MIN. OA CFM	ESP (IN)	COIL TYPE	ELECTRICAL DATA						OPER. WT. (LBS)	OUTDOOR UNIT	REMARKS
									MOTOR OUTPUT WATTS	V	PH	HZ	MCA	FLA			
FC-B1	WALL MOUNTED	TRANE/MITSUBISHI	TPKA0A0241KA70A	2.0	775	-	-	-	167	POWERED BY OUTDOOR UNIT			1.0	0.36	46	HP-B1	1 2 3 4
FC-B2	WALL MOUNTED	TRANE/MITSUBISHI	TPKA0A0181LA00A	1.5	455	-	-	-	167	POWERED BY OUTDOOR UNIT			1.0	0.19	28	HP-B2	1 2 3 4
FC-C1	WALL MOUNTED	TRANE/MITSUBISHI	TPKA0A0361KA70A	3.0	920	-	-	-	167	POWERED BY OUTDOOR UNIT			1.0	0.57	46	HP-C1	1 2 3 4
FC-C2	WALL MOUNTED	TRANE/MITSUBISHI	TPKA0A0361KA70A	3.0	920	-	-	-	167	POWERED BY OUTDOOR UNIT			1.0	0.57	46	HP-C2	1 2 3 4

1. PROVIDE WALL MOUNTED THERMOSTAT
2. SEE DETAIL 8/M4.2 FOR ANCHORAGE
3. CONTROL WITH EMS; PROVIDE WITH DISTRICT STANDARD THERMOSTAT
4. PROVIDE CONDENSATE PUMP.

GRAVITY VENT SCHEDULE

UNIT	MAKE	MODEL	TOTAL CFM	ESP (IN)	THROAT SIZE	HOOD SIZE	UNIT OPER. WT. (LBS)	CURB WT. (LBS)	REMARKS									
									1	2	3	4	5	6	7	8	9	10
GV-C1	GREENHECK	GRSR-36	-	-	36.5"x36.5"	56.75" ROUND	45	44	X	X								

1. WITH FACTORY ROOF CURB
2. SEE DETAIL 1/M-4.3 FOR ANCHORAGE

3/31/2023 7:46:02 AM

IDENTIFICATION STAMP
DIV. OF THE STATE ARCHITECT
APP: 03-122664 INC:
REVIEWED FOR
SS ☑ FLS ☑ ACS ☑
DATE: 05/12/2023

pjhm architects

LICENSED ARCHITECT
THOMAS W. RINNERT
NO. C15585
REN. 02/25
STATE OF CALIFORNIA

REGISTERED PROFESSIONAL ENGINEER
ROBERT E. LOSSER
EXP. 27963
Exp. 6/30/24
MECHANICAL
STATE OF CALIFORNIA

Engineous Group, Inc.
896 N. Fair Oaks Ave., Suite E
Pasadena, CA 91103
Phone: (626) 696-3650

OC Office: 24461 Ridge Route Drive #100, Laguna Hills, CA 92653 • OC Phone: 949.496.6191 • SD Office: 804 Pier View Way #103, Oceanside, CA 92054 • SD Phone: 760.730.5527 • LA Office: 837 Traction Avenue, #410, Los Angeles, CA 90013 • LA Phone: 213.278.0172 • Web: pjhm.com

HIGHLAND HIGH SCHOOL
50M POOL & AQUATICS CENTER

KERN HIGH SCHOOL DISTRICT

HVAC EQUIP. SCHEDULE, LEGEND & NOTES

M-1.2

HVAC KEY NOTES

1. LINED SA & RA DUCTS FROM AC UNIT ON ROOF.
2. 6"x6" EXHAUST DUCT UP THROUGH ROOF.
3. 12"x12" EXHAUST DUCT UP THROUGH ROOF.

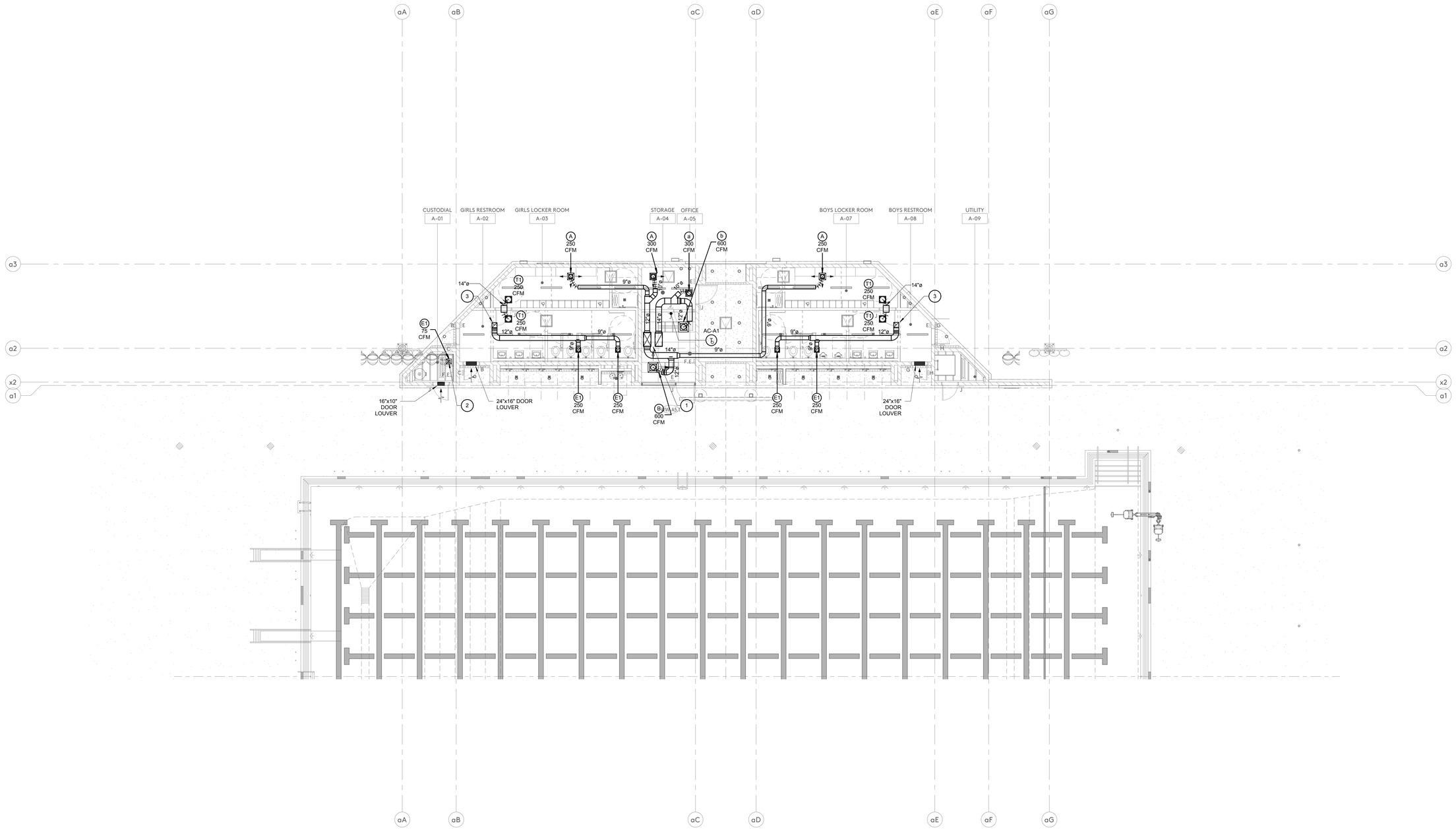

HVAC FLOOR PLAN - BUILDING A

1
1/8" = 1'-0"

IDENTIFICATION STAMP
DIV. OF THE STATE ARCHITECT
APP: 03-122664 INC:
REVIEWED FOR
SS ☑ FLS ☑ ACS ☑
DATE: 05/12/2023

pjhm architects

LICENSED ARCHITECT
THOMAS W. KRUSE
NO. C15585
REN. 02/25
STATE OF CALIFORNIA

REGISTERED PROFESSIONAL ENGINEER
RUDOLF E. STEVENSON
No. 27963
Exp. 6/30/24
MECHANICAL
STATE OF CALIFORNIA

Engineous Group, Inc.
898 N. Fair Oaks Ave., Suite E
Pasadena, CA 91103
Phone: (626) 696-3850

HIGHLAND HIGH SCHOOL
50M POOL & AQUATICS CENTER

KERN HIGH SCHOOL DISTRICT

HVAC FLOOR PLAN - BUILDING A

M-2.1

OC Office: 24461 Ridge Route Drive #100, Laguna Hills, CA 92653 • OC Phone: 949.496.6191 • SD Office: 804 Pier View Way #103, Oceanside, CA 92054 • SD Phone: 760.730.5527 • LA Office: 837 Traction Avenue, #410, Los Angeles, CA 90013 • LA Phone: 213.278.0172 • Web: pjhm.com

3/31/2023 7:46:10 AM

HVAC KEY NOTES

1. LINED SA & RA DUCTS FROM AC UNIT ON ROOF.
2. WALL MOUNTED FAN COIL UNIT. RUN REFRIGERANT PIPING THROUGH ROOF TO FC UNIT. SIZE THE REFRIGERANT PIPING PER MANUFACTURER'S RECOMMENDATION. SEE DETAIL 8/M-4.2
3. GROUND MOUNTED CONDENSING UNIT ON 6" HIGH LEVEL EQUIPMENT PAD. PROVIDE SEISMIC RESTRAINT. RUN REFRIGERANT PIPING DOWN THROUGH ROOF TO FC UNIT. SIZE THE REFRIGERANT PIPING PER MANUFACTURER'S RECOMMENDATION.
4. 10"x10" EXHAUST DUCT UP THROUGH ROOF.

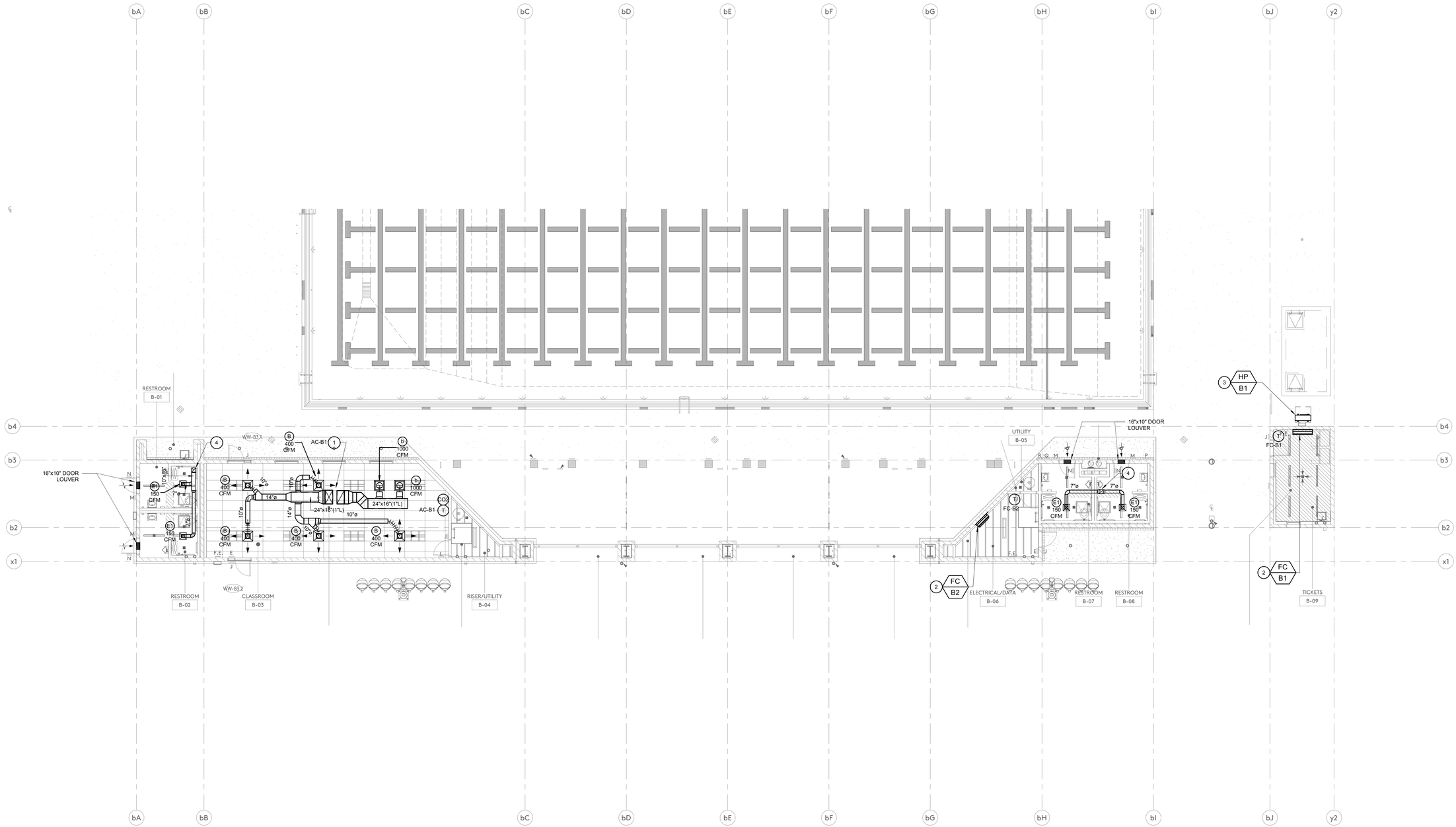

HVAC FLOOR PLAN - BUILDING B

1/8" = 1'-0"

3/31/2023 7:46:16 AM

IDENTIFICATION STAMP
DIV. OF THE STATE ARCHITECT
APP: 03-122664 INC:
REVIEWED FOR
SS ☑ FLS ☑ ACS ☑
DATE: 05/12/2023

pjhm architects

LICENSED ARCHITECT
JAMES W. RHINEHART
NO. C15585
REN. 02/25
STATE OF CALIFORNIA

REGISTERED PROFESSIONAL ENGINEER
ROBERT E. [illegible]
NO. 27963
Exp. 6/30/24
MECHANICAL
STATE OF CALIFORNIA

Engineous Group, Inc.
896 N. Fair Oaks Ave., Suite E
Pasadena, CA 91103
Phone: (626) 696-3650

LA Office: 837 Traction Avenue, #410, Los Angeles, CA 90013 • LA Phone: 213.278.0172 • Web: pjhm.com
SD Phone: 760.730.5527 • SD Office: 804 Pier View Way #103, Oceanside, CA 92054
OC Office: 24461 Ridge Route Drive #100, Laguna Hills, CA 92653 • OC Phone: 949.496.6191 • SD Office: 804 Pier View Way #103, Oceanside, CA 92054

HIGHLAND HIGH SCHOOL
50M POOL & AQUATICS CENTER

KERN HIGH SCHOOL DISTRICT

HVAC FLOOR PLAN - BUILDING B

M-2.2

HVAC KEY NOTES

1. WALL MOUNTED FAN COIL UNIT. RUN REFRIGERANT PIPING THROUGH ROOF TO FC UNIT. SIZE THE REFRIGERANT PIPING PER MANUFACTURER'S RECOMMENDATION. SEE DETAIL 8/M-4.2
2. 8"∅ FLUE THRU ROOF OPENING, INSTALL AND TERMINATE PER MANUFACTURER'S INSTALLATION INSTRUCTIONS.
3. 36"x36" DUCT FROM ABOVE & DROP TO 6" BELOW ROOF. PROVIDE 1/2" WIRE MESH AT OPENING.
4. 12"x12" STAINLESS STEEL EXHAUST AIR DUCT UP THROUGH ROOF.
5. 8"x8" EA OPENING WITH 1/2" SS WIRE MESH & 8"x8" SS VOLUME DAMPER SET AT 200 CFM.
6. 8"x8" SS EA DUCT DROP TO 12" A.F.F. WITH 1/2" SS WIRE MESH & 8"x8" SS VOLUME DAMPER SET AT 200 CFM.

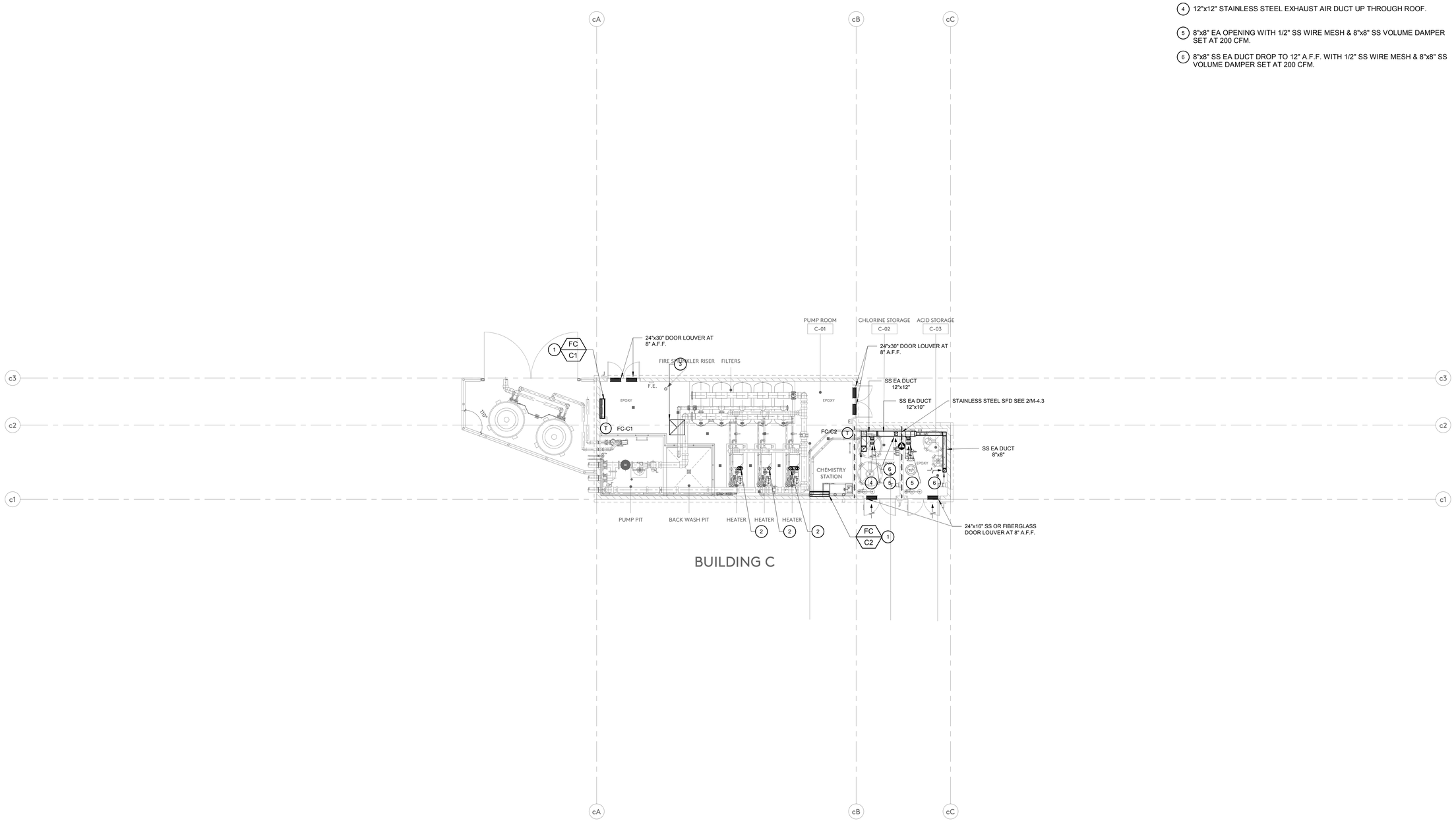

HVAC FLOOR PLAN - BUILDING C

1
1/8" = 1'-0"

IDENTIFICATION STAMP
DIV. OF THE STATE ARCHITECT
APP: 03-122664 INC:
REVIEWED FOR
SS ☑ FLS ☑ ACS ☑
DATE: 05/12/2023

pjhm architects

LICENSED ARCHITECT
THOMAS W. KRUSE
NO. C15585
REN. 02/25
STATE OF CALIFORNIA

REGISTERED PROFESSIONAL ENGINEER
BRADLEY E. STEVENSON
NO. 27963
Exp. 6/30/24
MECHANICAL
STATE OF CALIFORNIA

Engineous Group, Inc.
898 N. Fair Oaks Ave., Suite E
Pasadena, CA 91103
Phone: (626) 696-3850

HIGHLAND HIGH SCHOOL
50M POOL & AQUATICS CENTER

KERN HIGH SCHOOL DISTRICT

HVAC FLOOR PLAN - BUILDING C

M-2.3

OC Office: 24461 Ridge Route Drive #100, Laguna Hills, CA 92653 • OC Phone: 949.496.6191 • SD Office: 804 Pier View Way #103, Oceanside, CA 92054 • SD Phone: 760.730.5527 • LA Office: 837 Traction Avenue, #410, Los Angeles, CA 90013 • LA Phone: 213.278.0172 • Web: pjhm.com

3/31/2023 7:46:21 AM

HVAC KEY NOTES

1. FULL SIZE LINED SA & RA PLENUMS DOWN THROUGH ROOF FROM AC UNIT.
2. MOUNT EXHAUST FAN ON LEVEL FACTORY ROOF CURB. EXHAUST OUTLETS SHALL BE 10 FEET AWAY FROM INTAKE OPENINGS AND 10 FEET ABOVE ADJOINING GRADE.

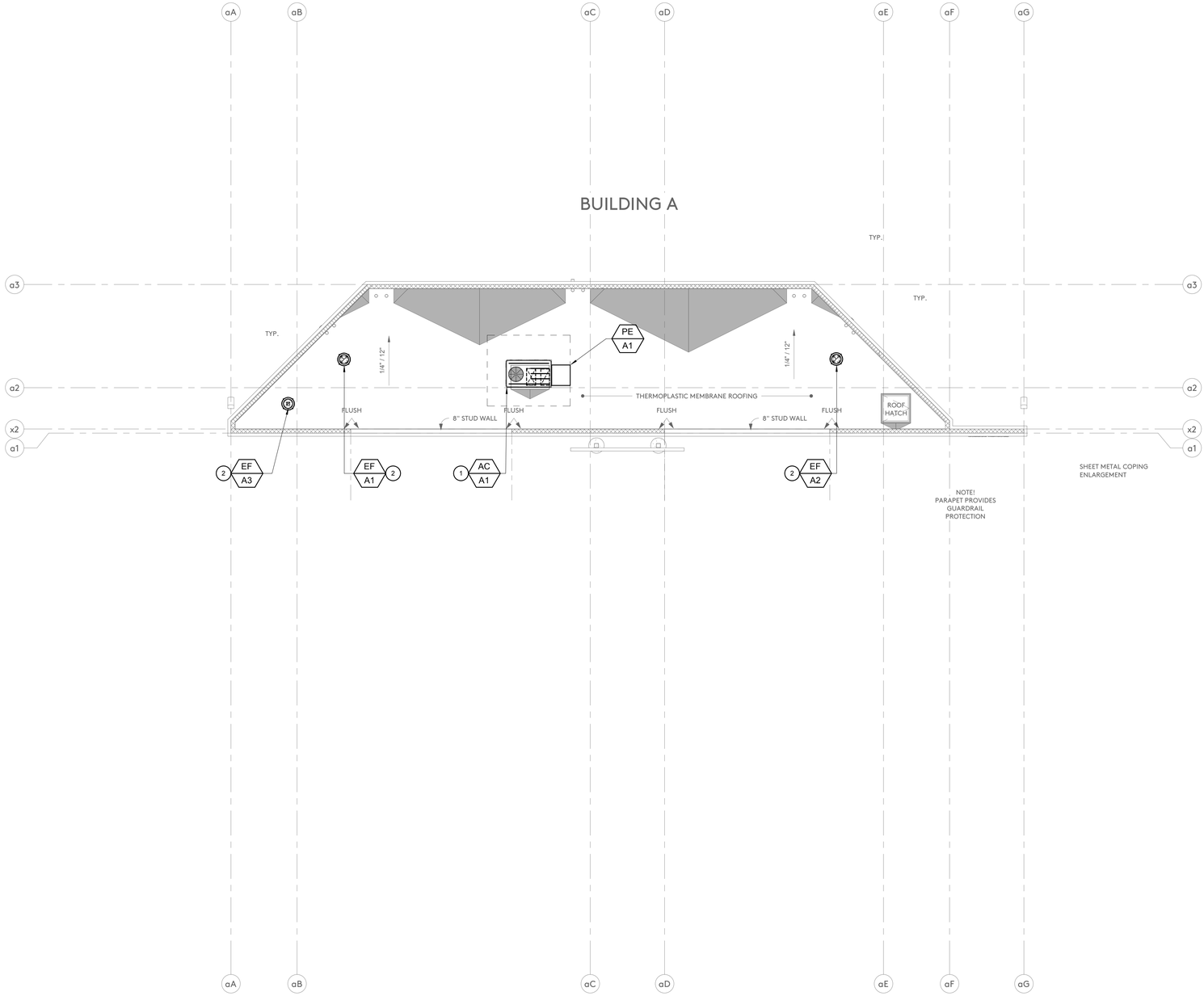

HVAC ROOF PLAN - BUILDING A

1
1/8" = 1'-0"

IDENTIFICATION STAMP
DIV. OF THE STATE ARCHITECT
APP: 03-122664 INC:
REVIEWED FOR
SS ☑ FLS ☑ ACS ☑
DATE: 05/12/2023

pjhm architects

LICENSED ARCHITECT
THOMAS W. KRUSE
NO. C15585
REN. 02/25
STATE OF CALIFORNIA

REGISTERED PROFESSIONAL ENGINEER
BUDLEY E. STEVENSON
No. 27963
Exp. 6/30/24
MECHANICAL
STATE OF CALIFORNIA

Engineous Group, Inc.
898 N. Fair Oaks Ave., Suite E
Pasadena, CA 91103
Phone: (626) 696-3850

HIGHLAND HIGH SCHOOL
50M POOL & AQUATICS CENTER

KERN HIGH SCHOOL DISTRICT

HVAC ROOF PLAN - BUILDING A

M-3.1

OC Office: 24461 Ridge Route Drive #100, Laguna Hills, CA 92653 • OC Phone: 949.496.6191 • SD Office: 804 Pier View Way #103, Oceanside, CA 92054 • SD Phone: 760.730.5527 • LA Office: 837 Traction Avenue, #410, Los Angeles, CA 90013 • LA Phone: 213.278.0172 • Web: pjhm.com

3/31/2023 7:46:23 AM

HVAC KEY NOTES

1. FULL SIZE LINED SA & RA PLENUMS DOWN THROUGH ROOF FROM AC UNIT.
2. ROOF MOUNTED CONDENSING UNIT ON 6" HIGH LEVEL EQUIPMENT PAD. PROVIDE SEISMIC RESTRAINT. RUN REFRIGERANT PIPING DOWN THROUGH ROOF TO FC UNIT. SIZE THE REFRIGERANT PIPING PER MANUFACTURER'S RECOMMENDATION.
3. MOUNT EXHAUST FAN ON LEVEL FACTORY ROOF CURB. EXHAUST OUTLETS SHALL BE 10 FEET AWAY FROM INTAKE OPENINGS AND 10 FEET ABOVE ADJOINING GRADE.

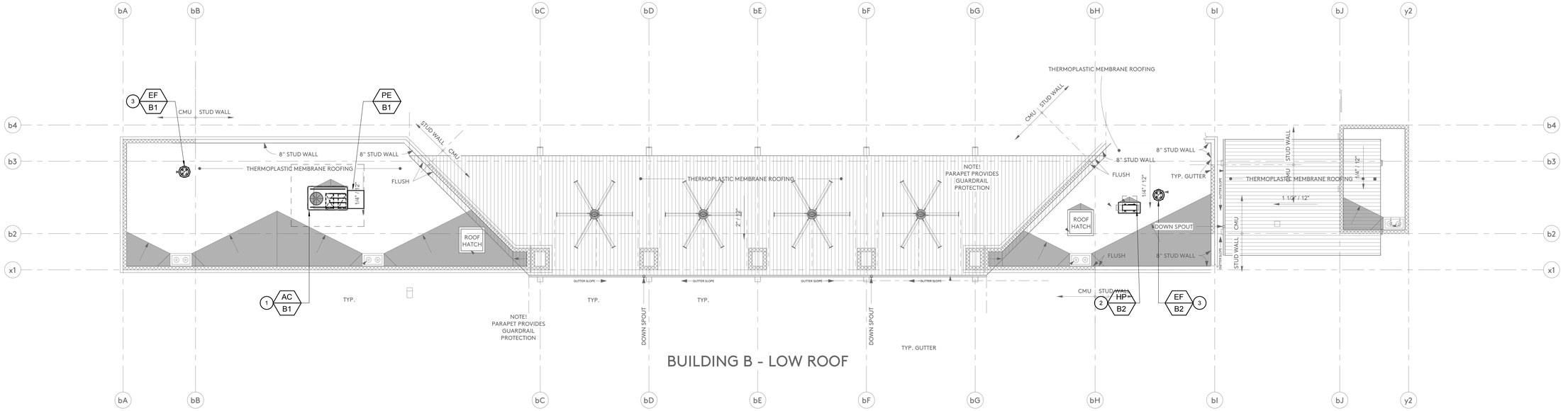

HVAC ROOF PLAN - BUILDING B

1
1/8" = 1'-0"

IDENTIFICATION STAMP
DIV. OF THE STATE ARCHITECT
APP: 03-122664 INC:
REVIEWED FOR
SS ☑ FLS ☑ ACS ☑
DATE: 05/12/2023

pjhm architects

LICENSED ARCHITECT
THOMAS W. KRUSE
NO. C15585
REN. 02/25
STATE OF CALIFORNIA

REGISTERED PROFESSIONAL ENGINEER
PHILLIP E. STEVENSON
No. 27963
Exp. 6/30/24
MECHANICAL
STATE OF CALIFORNIA

Engineous Group, Inc.
898 N. Fair Oaks Ave., Suite E
Pasadena, CA 91103
Phone: (626) 696-3850

HIGHLAND HIGH SCHOOL
50M POOL & AQUATICS CENTER

KERN HIGH SCHOOL DISTRICT

HVAC ROOF PLAN - BUILDING B

M-3.2

OC Office: 24461 Ridge Route Drive #100, Laguna Hills, CA 92653 • OC Phone: 949.496.6191 • SD Office: 804 Pier View Way #103, Oceanside, CA 92054 • SD Phone: 760.730.5527 • LA Office: 837 Traction Avenue, #410, Los Angeles, CA 90013 • LA Phone: 213.278.0172 • Web: pjhm.com

3/31/2023 7:46:26 AM

HVAC KEY NOTES

1. ROOF MOUNTED CONDENSING UNIT ON 6" HIGH LEVEL EQUIPMENT PAD. PROVIDE SEISMIC RESTRAINT. RUN REFRIGERANT PIPING DOWN THROUGH ROOF TO FC UNIT. SIZE THE REFRIGERANT PIPING PER MANUFACTURER'S RECOMMENDATION.
2. ROOF MOUNTED EXHAUST FAN ON 8" HIGH LEVEL EQUIPMENT PAD. PROVIDE SEISMIC RESTRAINT. EXHAUST OUTLETS SHALL BE 10 FEET AWAY FROM AIR INTAKE OPENINGS AND 10 FEET ABOVE ADJOINING GRADE AND MIN. 7 FEET ABOVE ROOF. SEE DETAIL 5/M-4.2
3. 12"x12" STAINLESS STEEL EXHAUST AIR DUCT DOWN THROUGH ROOF.
4. MOUNT GV-1 ON LEVEL FACTORY ROOF CURB. AIR INTAKE SHALL BE 10 FEET AWAY FROM EXHAUST AIR OPENINGS.
5. 8"Ø FLUE THRU ROOF OPENING, INSTALL AND TERMINATE PER MANUFACTURER'S INSTALLATION INSTRUCTIONS. PROVIDE 1/2" WIRE MESH AT OPENING.

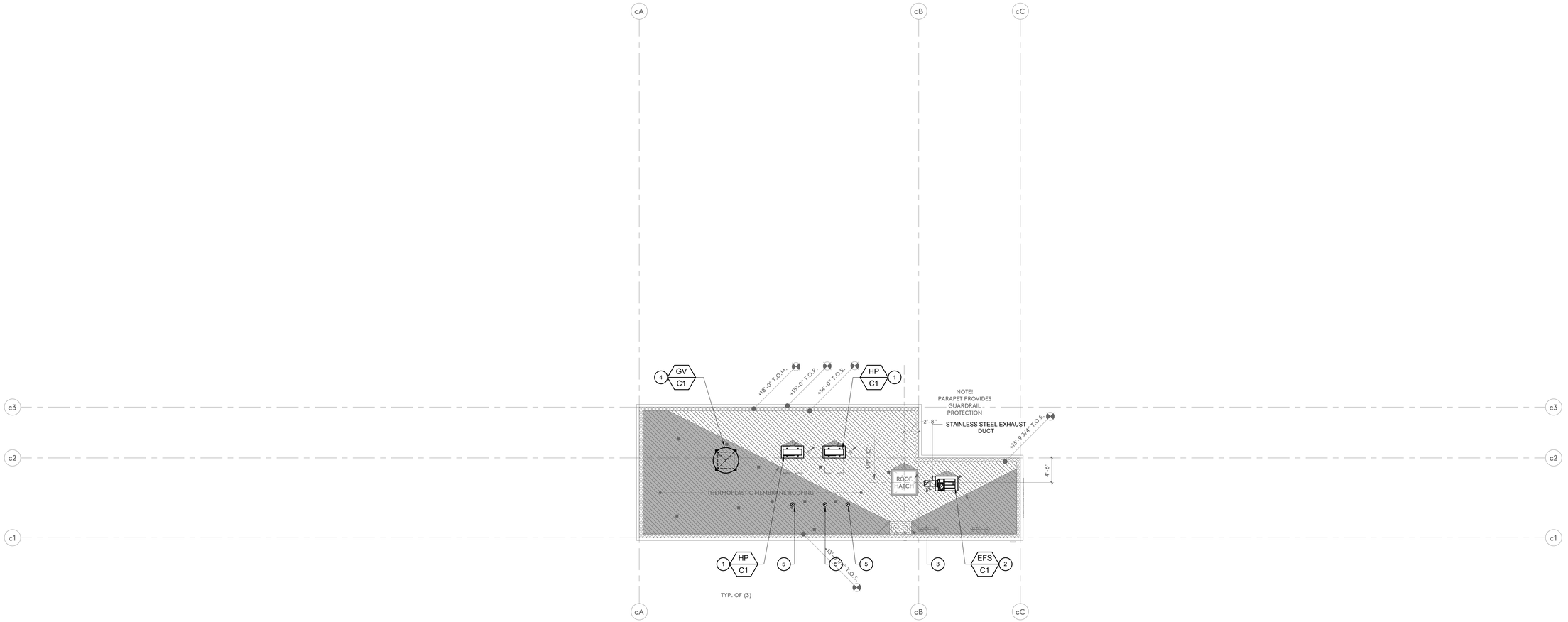

HVAC ROOF PLAN - BUILDING C

1
1/8" = 1'-0"

IDENTIFICATION STAMP
DIV. OF THE STATE ARCHITECT
APP: 03-122664 INC:
REVIEWED FOR
SS ☑ FLS ☑ ACS ☑
DATE: 05/12/2023

pjhm architects

LICENSED ARCHITECT
THOMAS W. KRUSE
NO. C15585
REN. 02/25
STATE OF CALIFORNIA

REGISTERED PROFESSIONAL ENGINEER
SHIRLEY E. STEVENSON
NO. 27963
Exp. 6/30/24
MECHANICAL
STATE OF CALIFORNIA

Engineous Group, Inc.
898 N. Fair Oaks Ave., Suite E
Pasadena, CA 91103
Phone: (626) 696-3850

HIGHLAND HIGH SCHOOL
50M POOL & AQUATICS CENTER

KERN HIGH SCHOOL DISTRICT

HVAC ROOF PLAN - BUILDING C

M-3.3

OC Office: 24461 Ridge Route Drive #100, Laguna Hills, CA 92653 • OC Phone: 949.496.6191 • SD Office: 804 Pier View Way #103, Oceanside, CA 92054 • SD Phone: 760.730.5527 • LA Office: 837 Traction Avenue, #410, Los Angeles, CA 90013 • LA Phone: 213.278.0172 • Web: pjhm.com

3/31/2023 7:46:29 AM

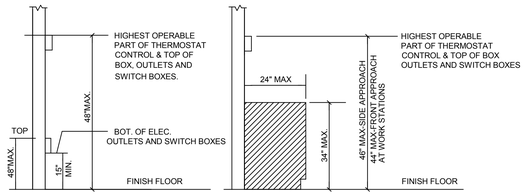

CBC 11B-308.2.1
CBC 11B-308.3.1

CBC 11B-308.2.2 & 11B-308.3.2

NOTE:
FORWARD OR FRONT APPROACH FOR DEVICES MOUNTED ABOVE COUNTERS ASSUMES THAT DIRECTLY BELOW THE DEVICE, THE COUNTER HAS A 30" MIN. WIDTH X 27" MIN. HIGH X 19" MIN. DEEP CLEAR OPENING.

MOUNTING HEIGHT OVER OBSTRUCTION

SCALE: NONE | 2

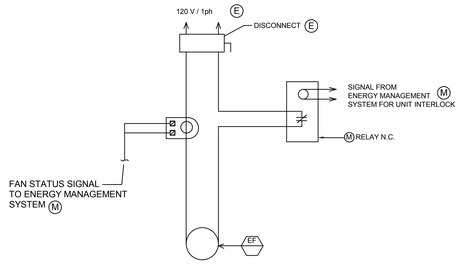

TYPICAL EXHAUST FAN CONTROL AND WIRING DIAGRAM

SCALE: NONE | 3

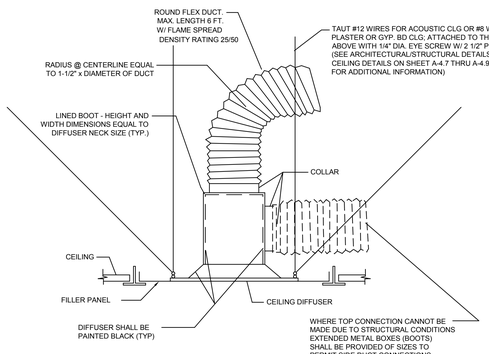

NOTES:
1. RETURN, TRANSFER AND EXHAUST CEILING GRILLES SIMILAR.

TYPICAL CEILING DIFFUSER

SCALE: NONE | 4



PLAN VIEW

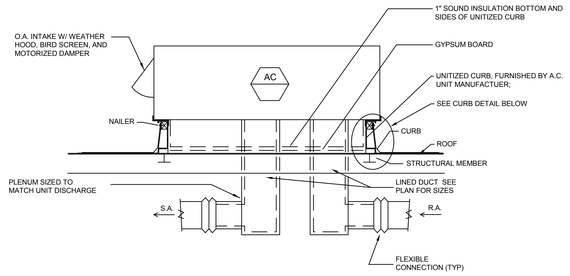

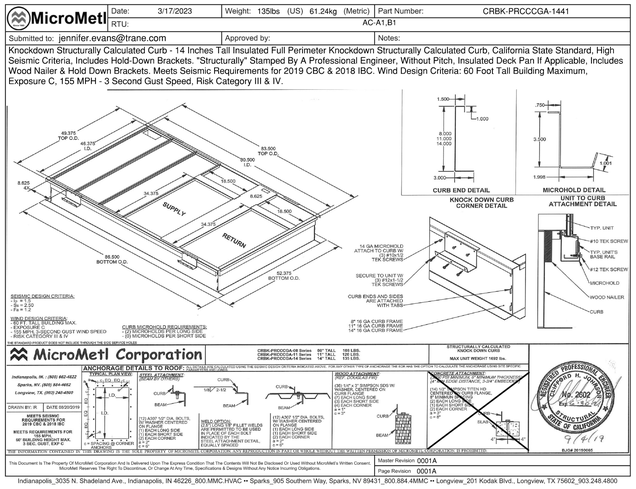

AC A1 AC B1

NOTE
SEE STRUCTURAL PLANS 9/S-1.6 FOR ADDITIONAL INFORMATION

AIR CONDITIONING UNIT INSTALLATION

SCALE: NONE | 1

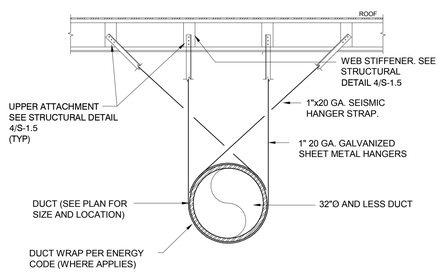

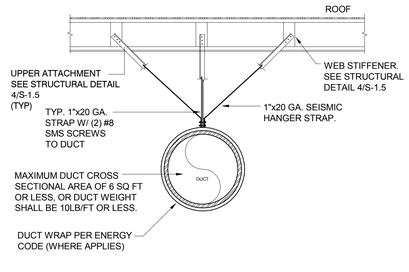

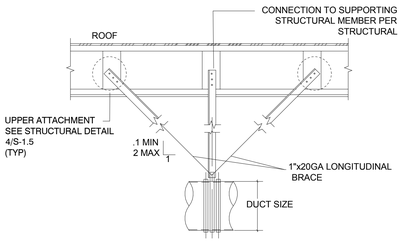

LONGITUDINAL BRACING

NOTES:

1. TRANSVERSE BRACING SHALL BE PROVIDED AT EVERY 30 FT OF DUCT RUN, OR AT BOTH ENDS IF DUCT RUN IS LESS THAN 30 FT., AT EACH DUCT TURN, WITH A MINIMUM OF ONE BRACE AT EACH END.

2. LONGITUDINAL BRACING SHALL BE PROVIDED AT EVERY 60 FT. OF DUCT RUN OR AT LEAST ONE BRACE PER DUCT RUN. TRANSVERSE BRACING FOR ONE DUCT SECTION MAY ALSO ACT AS LONGITUDINAL BRACING FOR DUCT SECTIONS OF 90° TURNS IF THE BRACING IS INSTALLED WITHIN TWO TIMES THE DUCT WIDTH OF THE INTERSECTION OF BOTH DUCTS AND BRACING IS SIZED FOR THE LARGER DUCT.

3. TRANSVERSE AND LONGITUDINAL BRACING SHALL NOT BE REQUIRED WHERE PROVISIONS ARE MADE TO AVOID IMPACT WITH OTHER DUCTS AND MECHANICAL COMPONENTS, OR TO PROTECT THE DUCTS IN THE EVENT OF SUCH IMPACT, THE DISTRIBUTION SYSTEM IS POSITIVELY ATTACHED TO THE STRUCTURE.

NOTES:

MAXIMUM SPACING FOR HANGERS SHALL BE 12'-0"

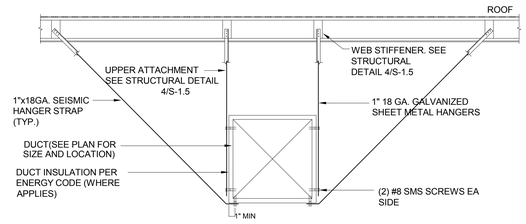

TYPICAL DUCT SUPPORT DETAILS (DUCTS <6 SF. F.A., <20LB/FT)

DUCT SUPPORT DETAILS

SCALE: NONE | 5

IDENTIFICATION STAMP
DIV. OF THE STATE ARCHITECT
APP: 03-122664 INC:
REVIEWED FOR
SS ☑ FLS ☑ ACS ☑
DATE: 05/12/2023

pjhm architects

LICENSED ARCHITECT
JAMES W. RUSSELL
NO. C15585
REN. 02/25
STATE OF CALIFORNIA

REGISTERED PROFESSIONAL ENGINEER
ROBERT E. EVANS
NO. 27963
Exp. 6/30/24
MECHANICAL
STATE OF CALIFORNIA

Engineous Group, Inc.
896 N. Fair Oaks Ave., Suite E
Pasadena, CA 91103
Phone: (626) 696-3650

LA Office: 837 Traction Avenue, #410, Los Angeles, CA 90013 • LA Phone: 213.278.0172 • Web: pjhm.com
SD Office: 804 Pier View Way #103, Oceanside, CA 92054 • SD Phone: 760.730.5527
OC Office: 24461 Ridge Route Drive #100, Laguna Hills, CA 92653 • OC Phone: 949.496.6191

HIGHLAND HIGH SCHOOL
50M POOL & AQUATICS CENTER

KERN HIGH SCHOOL DISTRICT

HVAC DETAILS

M-4.1

3/31/2023 7:46:30 AM

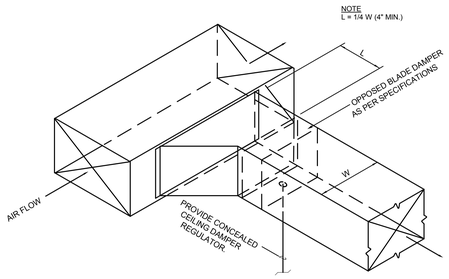

RECT. TO RECT. CONNECTION DETAIL | SCALE NONE | 1

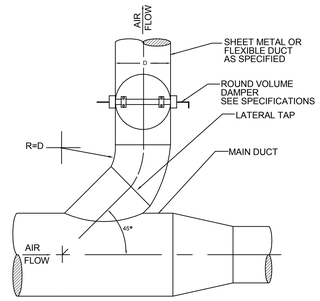

ROUND DUCT LATERAL TAP DETAIL | SCALE NONE | 2

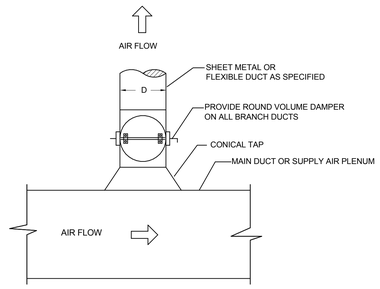

NOTES

1. DEPTH OF MAIN DUCT MUST BE 2" LARGER THAN CONICAL DIAMETER.

ROUND DUCT LATERAL TAP DETAIL | SCALE NONE | 3

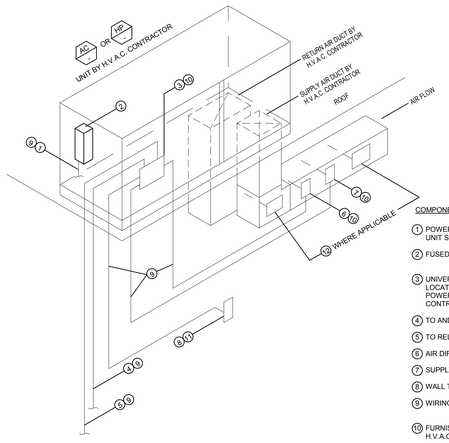

COMPONENT SCHEDULE

1. POWER SUPPLY; SEE AIR CONDITIONING UNIT SCHEDULE OR COOLING UNIT SCHEDULE.
2. FUSED DISCONNECT SWITCH.
3. UNIVERSAL UNITARY CONTROLLER, (U.U.C.) ONE EACH UNIT;CONTROLLER LOCATED IN CONTROL SECTION OF A.C. UNIT OR H.P. UNIT CABINET; POWER SUPPLY 5VA @ 24V; POWER OBTAINED FROM A.C. UNIT CONTROL CIRCUIT.
4. TO AND FROM OTHER U.U.C.
5. TO RELAY OR RELAYS FOR INTERLOCKED H.V.A.C. EQUIPMENT.
6. AIR DIFFERENTIAL PRESSURE SWITCH.
7. SUPPLY AIR TEMPERATURE SENSOR.
8. WALL THERMOSTAT.
9. WIRING AND CONDUIT.
10. FURNISHED BY THE CONTROL CONTRACTOR AND INSTALLED BY THE H.V.A.C. CONTRACTOR.
11. FURNISHED AND INSTALLED BY THE CONTROL CONTRACTOR.
12. SMOKE DETECTOR FURNISHED UNDER ELECTRICAL DIVISION OF THE SPECIFICATIONS AND INSTALLED BY THE H.V.A.C. CONTRACTOR.

ENERGY MANAGEMENT SYSTEM AND WIRING AT TYPICAL AIR CONDITIONING UNIT | SCALE NONE | 4

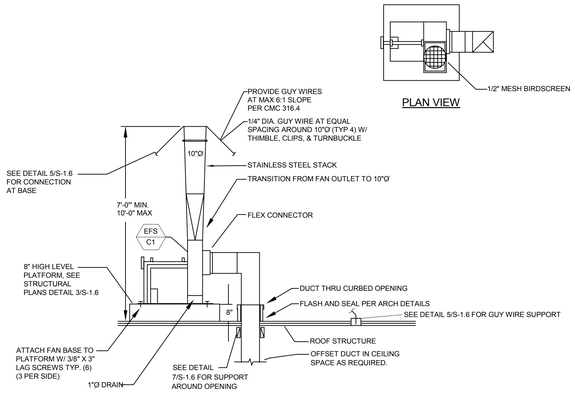

NOTE:
1. ALL DUCT WORK IS TO BE 18 GA. STAINLESS STEEL WITH WELDED JOINTS.

UTILITY EXHAUST FAN INSTALLATION DETAIL | SCALE NONE | 5

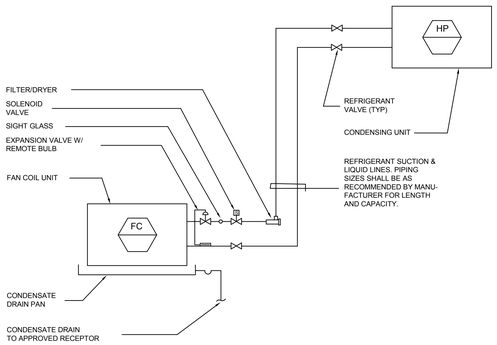

SPLIT SYSTEM PIPING DIAGRAM | SCALE NONE | 6

-

SCALE NONE | 7

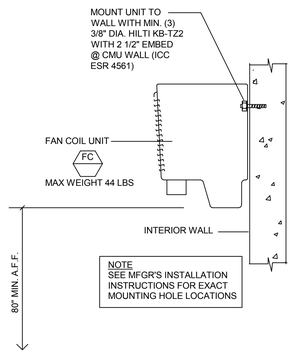

SIDEWALL FAN COIL UNIT MOUNTING DETAIL | SCALE NONE | 8

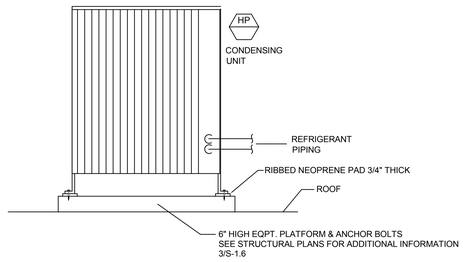

TYPICAL CONDENSING UNIT INSTALLATION DETAIL | SCALE NONE | 9

3/31/2023 7:46:31 AM

IDENTIFICATION STAMP
DIV. OF THE STATE ARCHITECT
APP: 03-122664 INC:
REVIEWED FOR
SS ☑ FLS ☑ ACS ☑
DATE: 05/12/2023

pjhm architects
LICENSED ARCHITECT
JAMES W. RUNDLE
NO. C15585
REN. 02/25
STATE OF CALIFORNIA
REGISTERED PROFESSIONAL ENGINEER
ROBERT E. [illegible]
No. 27963
Exp. 6/30/24
MECHANICAL
STATE OF CALIFORNIA
Engineous Group, Inc.
898 N. Fair Oaks Ave., Suite E
Pasadena, CA 91103
Phone: (626) 696-3650
LA Office: 837 Traction Avenue, #410, Los Angeles, CA 90013 • LA Phone: 213.278.0172 • Web: pjhm.com
SD Office: 804 Pier View Way #103, Oceanside, CA 92054 • SD Phone: 760.730.5527
OC Office: 24461 Ridge Route Drive #100, Laguna Hills, CA 92653 • OC Phone: 949.496.6191

HIGHLAND HIGH SCHOOL
50M POOL & AQUATICS CENTER

KERN HIGH SCHOOL DISTRICT

HVAC DETAILS

M-4.2

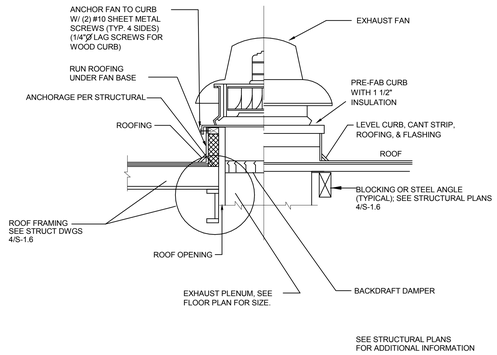

EXHAUST FAN & GRAVITY VENT MOUNTING DETAIL | SCALE NONE | 1

STAINLESS STEEL
FIRE SMOKE DAMPER
POTTORFF MODEL FSD-142

NOTES:

1. CSFM #3225-0368:0110
2. CSFM #3230-0368:0111
3. SMOKE FIRE DAMPER SHALL BE FIRE MARSHALL APPROVED AND INSTALLED STRICTLY PER MANUFACTURER'S PRINTED INSTRUCTIONS.
4. MANUFACTURER'S INSTALLATION INSTRUCTIONS SHALL BE MADE AVAILABLE TO THE INSPECTING AUTHORITIES.
5. SMOKE DAMPERS LOCATED IN MAIN SUPPLY OR RETURN DUCTS SHALL BE PROVIDED WITH CONTROLS TO SHUT DOWN CORRESPONDING AC UNIT WHEN DAMPERS ARE CLOSED.

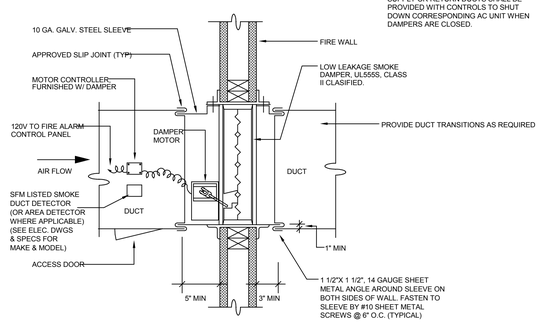

SMOKE/FIRE DAMPER DETAIL | SCALE NONE | 2

- | SCALE NONE | 3

- | SCALE NONE | 4

- | SCALE NONE | 5

- | SCALE NONE | 6

- | SCALE NONE | 7

- | SCALE NONE | 8

- | SCALE NONE | 9

IDENTIFICATION STAMP
DIV. OF THE STATE ARCHITECT
APP: 03-122664 INC:
REVIEWED FOR
SS ☑ FLS ☑ ACS ☑
DATE: 05/12/2023

pjhm architects

LICENSED ARCHITECT
THOMAS W. KRUSE
NO. C15585
REN. 02/25
STATE OF CALIFORNIA

REGISTERED PROFESSIONAL ENGINEER
RUDOLPH E. SANDERSON
NO. 27963
Exp. 6/30/24
MECHANICAL
STATE OF CALIFORNIA

Engineous Group, Inc.
898 N. Fair Oaks Ave., Suite E
Pasadena, CA 91103
Phone: (626) 696-3850

HIGHLAND HIGH SCHOOL
50M POOL & AQUATICS CENTER

KERN HIGH SCHOOL DISTRICT

HVAC DETAILS

M-4.3

OC Office: 24461 Ridge Route Drive #100, Laguna Hills, CA 92653 • OC Phone: 949.496.6191 • SD Office: 804 Pier View Way #103, Oceanside, CA 92054 • SD Phone: 760.730.5527 • LA Office: 837 Traction Avenue, #410, Los Angeles, CA 90013 • LA Phone: 213.278.0172 • Web: pjhm.com

3/31/2023 7:46:31 AM

HIGHLAND HIGH SCHOOL 50M POOL & AQUATICS CENTER

FIRE SPRINKLER SYSTEMS

2900 Royal Scots Way, Bakersfield, CA 93306

DSA UNDERGROUND NOTES

1. PRIOR TO INSTALLATION, ALL PLANS AND SPECIFICATIONS SHALL BE APPROVED BY DSA. REFER TO DSA IR A-25 FOR DESIGN, INSTALLATION AND MAINTENANCE GENERAL REQUIREMENTS.
2. INSPECTIONS ARE REQUIRED: 1) PRIOR TO POURING THRUST BLOCKS. 2) FOR HYDROSTATIC TESTING, AND 3) FOR FLUSH.
3. INSTALLATION, INSPECTION, AND TESTING SHALL CONFORM TO 2016 NFPA 13 AND 2016 NFPA 24 & CFC.
4. PRIVATE FIRE HYDRANTS SHALL BE APPROVED WET BARREL STYLE WITH A MINIMUM OF ONE 2 $\frac{1}{2}$" AND ONE 4" OUTLET. THE 4" OUTLET SHALL FACE THE FIRE DEPARTMENT ACCESS ROAD. ALL OUTLETS SHALL BE PROVIDED WITH NATIONAL STANDARD THREADS (NST). NFPA 24, 7.1.1.2.
5. FIRE HYDRANT SUPPLY PIPING SHALL BE A MINIMUM OF SIX INCHES IN DIAMETER. THE LOWEST OPERATING HOSE OUTLET SHALL BE A MINIMUM OF 18" ABOVE GRADE AND THE HYDRANT FLANGE SHALL BE A MINIMUM OF 2" ABOVE GRADE. NFPA 24, 5.2.1 & 7.3.3.
6. FIRE HYDRANTS SHALL BE A MINIMUM OF 40 FEET FROM ALL STRUCTURES. NFPA 24, 7.2.3.
7. A KEYED GATE VALVE SHALL BE PROVIDED FOR EACH HYDRANT IN AN ACCESSIBLE LOCATION. VALVES SHALL NOT BE LOCATED IN PARKING STALLS. NFPA 24, 7.1.1.1
8. ALL PIPING SHALL BE LISTED FOR USE IN FIRE PROTECTION SERVICE AND COMPLY WITH AWWA STANDARDS (CLASS 150 MINIMUM CLASS 200 PIPE SHALL BE USED WHERE THE PRESSURE MAY EXCEED 150 PSI. NFPA 24, 10.1.1 & 5.
9. ALL BOLTED JOINTS SHALL BE CLEANED AND THOROUGHLY COATED WITH ASPHALT OR OTHER CORROSION RETARDING MATERIAL AFTER INSTALLATION. NFPA 24, 10.3.5.2.
10. BACKFILL SHALL BE WELL TAMPED LAYERS TO CONSIST OF 6" MINIMUM BED OF CLEAN FILL SAND OR PEA GRAVEL BELOW AND 12" ABOVE THE PIPE (TOTAL 18" MINIMUM) . NFPA 24, 10.9.1.
11. FITTINGS SHALL BE OF AN APPROVED TYPE. NFPA 24, 10.2.1.
12. A MINIMUM OF 30" OF COVER, FROM FINISH GRADE TO THE TOP OF THE PIPE, SHALL BE PROVIDED. WHEN SURFACE LOADS ARE EXPECTED, A MINIMUM OF 36" COVER SHALL BE PROVIDED. NFPA 24, 10.4.4.
13. THRUST BLOCKS, OR OTHER APPROVED METHOD OF THRUST RESTRAINT, SHALL BE PROVIDED WHEREVER PIPE CHANGES DIRECTION. BACK-FILL BETWEEN THE JOINTS TO PREVENT MOVEMENT OF THE PIPE. PROVIDE DETAILS AND CALCULATIONS FOR SIZING THRUST BLOCKS BASE ON ACTUAL SOIL CONDITIONS. NFPA 24, 10.8.
14. A HYDROSTATIC TEST (200 PSI FOR TWO HOURS OR 50 PSI OVER MAXIMUM STATIC PRESSURE, WHICHEVER IS GREATER) SHALL BE PERFORMED. NFPA 24, 10.10.2.2.1.
15. THE SYSTEM SHALL BE THOROUGHLY FLUSHED BEFORE CONNECTION IS MADE TO OVERHEAD PIPING. FLOW SHALL BE THROUGH A MINIMUM OF 4" HOSE OF PIPE. NFPA 24, 10.10.2.1.
16. ALL CONTROL VALVES SHALL BE LOCKED IN THE OPEN POSITION. VALVES SHALL BE MONITORED IN ACCORDANCE WITH CBC/CFC 903.4.
17. ALL CONTROL VALVES SHALL BE LISTED INDICATING TYPE UNLESS A NON-INDICATING VALVE, SUCH AS AN UNDERGROUND GATE VALVE WITH APPROVED ROADWAY BOX COMPLETE WITH T-WRENCH, IS ACCEPTABLE TO AUTHORITY HAVING JURISDICTION (AHJ) . NFPA 24, 6.1.1.
18. POST INDICATING VALVES (PIV) SHALL BE TESTED TO INSURE THAT THE "TARGETS" (OPEN, CLOSED) ARE CLEARLY IDENTIFIED WHEN VALVE IS OPENED AND CLOSED. NFPA 24, 6.3.1, 10.10.1 & 14.1.
19. TESTS SHALL BE MADE BY THE INSTALLING CONTRACTOR IN THE PRESENCE OF THE (AHJ) . PROVIDE A COMPLETED CONTRACTORS'S MATERIAL AND TEST CERTIFICATE FOR UNDERGROUND PIPING TO DSA, NFPA 24, 10.10.1 & 14.1, CFC 901.5 & 6.

DSA BUILDING SYSTEM GENERAL NOTES

1. 2016 NFPA 13, 8.16.4.1.1: THE DESIGNER SHALL INDICATE ON THE PLANS ALL PIPING SUBJECT TO FREEZING (WHERE WATER TEMPERATURE CAN NOT BE MAINTAINED ABOUT 40 DEGREES FAHRENHEIT) AND PROVIDE APPROVED PROTECTION.
2. 2016 NFPA 13, 10.10.2.1.1: UNDERGROUND MAINS AND LEAD-IN CONNECTIONS TO SYSTEM RISERS SHALL BE COMPLETELY FLUSHED BEFORE CONNECTION IS MADE TO OVERHEAD SPRINKLER PIPING. WHERE UNDERGROUND PIPING IS FLUSHED AND NOT IMMEDIATELY CONNECTED TO OVERHEAD PIPING, THE RISER SHALL BE CAPPED OR OTHERWISE PROTECTED TO PREVENT DEBRIS, DIRT, OR ANIMALS FROM ENTERING INTO THE UNDERGROUND PIPING (WITNESSED BY THE PROJECT INSPECTOR) .
3. CERTIFIED OR WET-SIGNED WATER FLOW TEST DATA SHALL BE NO MORE THAN 12 MONTHS OLD AT THE TIME OF SUBMITTAL AND INDICATE THE LOCATIONS AND HEIGHT ELEVATIONS OF THE TEST AND RESIDUAL FLOW HYDRANTS. WATER FLOW TEST DATA MUCH BE PROVIDED BY OR WITNESSED BY THE LOCAL WATER PURVEYOR, UTILITIES COMPANY, OR LOCAL FIRE DEPARTMENT.
4. 2016 NFPA 13 FIGURE 10.10.1: A COPY OF COMPLETED AND SIGNED "CONTRACTOR'S MATERIALS & TEST CERTIFICATE FOR UNDERGROUND PIPING" SHALL BE INCLUDED IN THE CLOSE-OUT DOCUMENTS FOR BUILDING SYSTEM.
5. 2016 NFPA 13, 10.10.2.2.1: ALL PIPING AND ATTACHED APPURTENANCES SUBJECTED TO SYSTEM WORKING PRESSURE SHALL BE HYDROSTATICALLY TESTED AT 200 PSI, OR 50 PSI IN EXCESS OF THE SYSTEM WORKING PRESSURE, WHICHEVER IS GREATER, AND SHALL MAINTAIN THAT PRESSURE WITHOUT LOSS FOR 2 HOURS. (WITNESSED BY PROJECT INSPECTOR) .
6. 2016 NFPA 13, 6.2.9.1: PROVIDE SUPPLY OF SPARE SPRINKLERS IN A PROTECTIVE CABINET, INCLUDING SPRINKLER WRENCH FOR EACH TYPE INSTALLED. SUPPLY SHALL BE NO FEWER THAN 6 SPARE SPRINKLERS MATCHING THE TYPES AND TEMPERATURES RATING IN EACH PROTECTED AREA FOR SYSTEMS LESS THAN 300 SPRINKLERS. (12 SPARE SPRINKLER HEADS FOR SYSTEMS 300 TO 1000 SPRINKLERS.)
7. 2016 NFPA 13, 9.3.6.1: FURNISH RESTRAINT OF BRANCH LINES. THE END SPRINKLER ON EACH LINE SHALL BE RESTRAINED AGAINST EXCESSIVE VERTICAL AND LATERAL MOVEMENT (9.3.6.3) . BRANCH LINES SHALL BE LATERALLY RESTRAINED AT INTERVALS NOT EXCEEDING THOSE SPECIFIED IN Table 9.3.6.4 (a) and (b) (9.3.6.4) .
8. 2019 CBC 903.4.2 AND NFPA 13 8.17.4.2.3: THE INSPECTORS TEST VALVE LOCATION SHALL BE ACCESSIBLE. THE PIPE SHALL BE NO LESS THAN 1 INCH, WITH A SMOOTH BORE, CORROSION- RESISTANT ORIFICE, PROVIDING THE EQUIVALENT FLOW OF THE SMALLEST ORIFICE OF THE SPRINKLER TYPES INSTALLED WITHIN THE SYSTEM. THE DISCHARGE SHALL BE TO A DRAIN CONNECTION OR AN APPROVED LOCATION AT THE EXTERIOR OF THE BUILDING.
9. THE SPRINKLER FLOW SWITCH SHALL BE TESTED TO CONFIRM THAT WHEN THE INSPECTOR'S TEST VALVE IS ACTIVATED AN ALARM WILL SOUND NO MORE THAN 90 SECONDS AFTER INITIAL FLOW (WITNESSED BY THE PROJECT INSPECTOR)
10. 2019 CBC 904.4.2: CONNECTIONS TO PROTECTED PREMISES AND SUPERVISING STATION FIRE ALARM SYSTEMS SHALL BE TESTED TO VERIFY PROPER IDENTIFICATION AND TRANSMISSION OF ALARMS FROM AUTOMATIC FIRE EXTINGUISHING SYSTEMS (WITNESSED BY PROJECT INSPECTOR)
11. 2016 NFPA 13 SEC 25.6.1.1: SIGNAGE SHALL BE PROVIDED AS REQUIRED, INCLUDING RISER ROOM IDENTIFICATION. PER CBC 902.1.2, THE ACCESS DOOR FOR THE AUTOMATIC RISER ROOM SHALL HAVE A "FIRE RISER INSIDE" TEXT WITH A 2" MINIMUM HIGH AND A 3/8" MINIMUM STROKE. THE LETTERING SHALL BE IN CONTRASTING COLOR TO THE BACKGROUND.
12. 2019 CBC SEC 903.4.1: THE MAIN FIRE ALARM PANEL VALVE MONITORING AND WATER FLOW ALARM AND TROUBLE SIGNALS SHALL BE DISTINCTLY DIFFERENT AND SHALL BE AUTOMATICALLY TRANSMITTED TO AN APPROVED CENTRAL STATION MONITORING COMPANY.
13. 2016 NFPA 13 SEC 25.5.1: A PERMANENT HYDRAULIC CALCULATIONS DESIGN DATA PLACARD SHALL BE ATTACHED TO EACH RISER.
14. 2016 NFPA 13 SEC 6.9.1,AND 2019 CBC 903.4.2: FLOW SWITCH SHALL BE CONNECTED TO A 10 INCH OUTSIDE ALARM BELL OR OTHER AUDIBLE ALARM DEVICE AT EACH RISER. APPROVED IDENTIFICATION SIGNS SHALL BE PROVIDED ON THE OUTSIDE ALARM BELL , SPRINKLER FIRE ALARM- WHEN ALARM SOUNDS CALL 911/ FIRE DEPARTMENT.
15. TITLE 19 ARTICLE 906 (A) : A LABEL OF THE SELF-ADHESIVE TYPE SHALL BE PLACED ON THE FIRE DEPARTMENT CONNECTION OR ON THE RISER FOR FIRE SPRINKLER SYSTEM AND SHALL INCLUDE THE DATA OF INSTALLATION AND/ OR DATE SERVICE WAS PERFORMED AND LICENSE NUMBER OF PERSON PERFORMING SERVICE WORK.
16. 2016 NFPA 13 FIGURE 25.1: INSTALLING CONTRACTOR SHALL COMPLETE AND SIGN CONTRACTOR'S MATERIAL & TEST CERTIFICATE FOR THE ABOVEGROUND PIPING. THIS FORM SHALL BE GIVEN TO THE PROJECT INSPECTOR WHO WILL FORWARD TO DSA FOR FILING IN PROJECT RECORDS.

WATER DEPARTMENT NOTES

ARRANGEMENT OF FIRE PROTECTION WATER SUPPLY AND DEVICES SHALL STRICTLY CONFORM TO THE REQUIREMENTS OF CITY OF BAKERSFIELD WATER RESOURCES DEPARTMENT.

1. BACKFLOW PREVENTION DEVICE TO BE REDUCED PRESSURE DETECTOR ASSEMBLY (RPDA) . ASSEMBLY SHALL BE FURNISHED WITH 2 U.L. LISTED BUTTERFLY GATE VALVES, EQUIPPED WITH APPROVED TAMPER SWITCHES. BACKFLOW ASSEMBLY SHALL BE UL , CLASSIFIED, AND AWWA APPROVED FOR FIRE SERVICE INSTALLATIONS AND LISTED BY THE CROSS-CONNECTION INSTITUTE AT THE UNIVERSITY OF SOUTHERN CALIFORNIA.
2. BACKFLOW PREVENTION ASSEMBLY SHALL BE TESTED UPON INSTALLATION BY ACERTIFIED BACKFLOW TECHNICIAN, PRIOR TO ACCEPTANCE OF BACKFLOW ASSEMBLY BY THE WATER DEPARTMENT.
3. CONTRACTOR SHALL FURNISH VALVE SUPPORT STANDS AS REQUIRED AND SHALL MAINTAIN ALL INSTALLATION CLEARANCES AND HEIGHTS AS SHOWN ON THE DRAWINGS AND STANDARD DETAILS FOR THE SERVING WATER DEPARTMENT.
4. CONCRETE SLAB TO BE MINIMUM 4" THICK AND SLOPED TO DRAIN. PAD ELEVATION TO BE 1" ABOVE FINISH GRADE IN LAWN AREAS AND 2" ABOVE FINISH GRADE IN ALL OTHER AREAS. OVERALL ALL DIMENSIONS OF PAD SHALL BE AS SHOWN ON THE DRAWINGS AND STANDARD DETAILS FOR THE SERVING WATER AND FIRE DEPARTMENTS.

COORDINATION NOTES

1. THE FIRE SPRINKLER SYSTEM SUBMITTAL SHALL INCLUDE WORKING PLANS IN ACCORDANCE WITH NFPA13 SECTION 23.1 AND DSA AUTOMATIC FIRE SPRINKLER SYSTEMS PROJECT SUBMITTAL GUIDELINES. DEVIATION FROM APPROVED PLANS SHALL REQUIRE PERMISSION OF THE AUTHORITY HAVING JURISDICTION PER NFPA 13, 23.1.2.
2. CONFIGURATION OF PIPING AND SPRINKLERS SHOWN ON THESE PLANS SHALL BE USED AS A BASIS FOR LAYOUT AND INSTALLATION. OFFSETS OR CHANGES IN ELEVATION SHALL BE UNDERTAKEN BY THE INSTALLING CONTRACTOR AS REQUIRED TO EFFECT COORDINATION WITH OTHER TRADES AND/OR MAINTAIN PROPER CLEARANCES. ALL SUCH REVISIONS SHALL BE SHOWN ON CONTRACTOR'S WORKING PLANS.
3. ALL DIMENSIONS SHOWN ON THESE PLANS ARE CENTERLINE-TO-CENTERLINE. INSTALLING CONTRACTOR SHALL INSPECT AND CONFIRM THE ACTUAL AS-BUILT CONDITIONS OF ALL WORK AREAS AND SHALL COORDINATE THE INSTALLATION OF FIXED FIRE PROTECTION SYSTEMS WITH ALL WORK BY OTHER TRADES.

A. THE EXACT LOCATION AND ELEVATION OF INSTALLED PIPING AND THE CUT LENGTHS OF ALL PIPING AND HANGERS SHALL BE THE RESPONSIBILITY OF THE INSTALLING CONTRACTOR.

B. INSTALLING CONTRACTOR SHALL COORDINATE THE INSTALLATION WITH OBSTRUCTIONS SUCH AS STRUCTURE, DUCTWORK, CABLE TRAYS AND OTHER SUCH BUILDING UTILITY SYSTEMS AND WORK BY OTHER TRADES.

C. WHERE FIELD CONFLICTS REQUIRE THAT PIPING BE REVISED, SUCH CHANGES SHALL BE INCLUDED IN CONTRACTOR'S WORKING PLANS AND SUBMITTED TO ARCHITECT FOR REVIEW, TO ASSURE CONFORMANCE TO APPROVED DESIGN.

D. CONTRACTOR SHALL NOT SUBMIT COPIES OF APPROVED CONSTRUCTION DOCUMENTS PRIOR TO COORDINATION OR IN LIEU OF COORDINATED WORKING PLANS.

4. WHERE PENDENT SPRINKLERS ARE SHOWN IN OR NEAR THE EXACT CENTER OF SUSPENDED CEILING TILES, CONTRACTOR SHALL BE CONFIRM THE ACTUAL TILE PATTERN AND SPRINKLER LOCATIONS, SO THAT THE FINAL INSTALLATION IS EXACTLY CENTERED, WHERE CEILING TILES ARE 2'X4' "SECOND LOOK" TYPE WITH 2'X2' MODULES, SPRINKLERS SHALL BE SHALL BE IN THE EXACT CENTER OF THE 2'X2' MODULE. WHERE CEILING TILES ARE CONVENTIONAL 2'X4', SPRINKLERS SHALL BE CENTERED IN THE 2' DIRECTION AND SHALL BE LOCATED AT LEAST 6" CLEAR FROM ANY T-BAR.
5. CONTRACTOR SHALL FURNISH AND COORDINATE CONNECTION POINTS BETWEEN FIRE SPRINKLER SYSTEM SIGNALING DEVICES AND THE FIRE DETECTION AND ALARM SYSTEM. THIS SHALL INCLUDE BUT IS NOT LIMITED TO THE LOCATION OF ALL BELLS AND HORNS, FLOW SWITCHES AND TAMPER SWITCHES REQUIRING CONNECTION TO THE FIRE ALARM AND SUPERVISORY SYSTEMS.
6. CONTRACTOR SHALL UNDERTAKE MEETINGS AND CORRESPONDENCE WITH AUTHORITIES HAVING JURISDICTION, AS REQUIRED TO CONFIRM SPECIFIC REQUIREMENTS REGARDING LOCATIONS AND METHODS OF DISCHARGING WATER FROM TEST AND DRAIN LOCATIONS. WHERE SHOWN ON PLANS, ALL WASTEWATER SHALL DISCHARGE INTO DEDICATED RECEPTORS AND BE COORDINATED WITH THE PLUMBING AND SEWER DESIGNS.

GENERAL CODE DATA

GOVERNING CODES:
BUILDING CODE: CALIFORNIA BUILDING CODE, 2019 ED.
FIRE CODE: CALIFORNIA FIRE CODE, 2019 ED

TYPE OF CONSTRUCTION: TYPE VB
NUMBER OF STORIES: 1

Bldg. B:
BUILDING HEIGHT: 26'-4"
OCCUPANCY CLASS: E, A-4
TOTAL PROJECT AREA: 5, 426 SQ. FT.

Bldg. C:
BUILDING HEIGHT: 18'-0"
OCCUPANCY CLASS: S-2
TOTAL PROJECT AREA: 1,605 SQ. FT.

WATER FLOW DATA

LOCATION: 2900 Royal Scots Way, Bakersfield, CA 93306

DATE TAKEN: 8/16/2022

STATIC PSI: 74 PSI	LESS 10% STATIC PSI: 66.6 PSI
RESIDUAL PSI: 34 PSI	RESIDUAL PSI: 30.6 PSI
FURNISHED BY: Another in The Fire	REF. ELEV: -3.0 FT
TAKEN BY: David Holt & Robert Wroe	FLOW GPM: 2526.3 GPM AT 20 PSI

SCOPE OF WORK

FURNISH NEW PRIVATE FIRE MAIN SYSTEM AND WET-PIPE AUTOMATIC FIRE SPRINKLER SYSTEM PER N.F.P.A. 13 & 24 2016 ed. & AND THE DIVISION OF THE STATE ARCHITECT STANDARDS FOR THE HIGHLAND HIGH SCHOOL 50M POOL & AQUATICS CENTER, KERN HIGH SCHOOL DISTRICT

FIRE LEGEND

SYMBOL	ABBR	DESCRIPTION
		NEW PIPING
		EXISTING PIPING
		EXISTING PIPING TO BE REMOVED
		PIPE HANGER LOCATION
		PIPE HANGER RESTRAINT
		FLANGED CONNECTION
		"RIDGID" GRV COUPLING
		"FLEXIBLE" GRV COUPLING
		SCREWED CAP
		FIRE HYDRANT
#2(1'-2")		HANGER TYPE AND LENGTH
		SCREWED PLUG
	2-WAY	2-WAY SEISMIC BRACE
	4-WAY	4-WAY SEISMIC BRACE
	FDC	FIRE DEPT. CONN.
	TB	UNDERGROUND THRUST BLOCK
	RS	FIRE SPRINKLER RISER
		FIRE ALARM BELL
T		TAMPER SWITCH
		KEY VALVE
CL-800 AFF		PIPING ELEVATION
1		HYDRAULIC REF. POINT
L01		BRANCH LINE NUMBER
P01		WELDED BRANCH LINE PIECE NO.
M01		WELDED MAIN PIECE NO.
		WALL PENETRATION SLEEVE
	PIV/FDC	POST INDICATING VALVE W/ FIRE DEPT CONNECTION
	BFP	BACK FLOW PREVENTOR

ABBREVIATIONS

AHJ	AUTHORITY HAVING JURISDICTION
AWWA	AMERICAN WATER WORKS ASSOCIATION
BFP	BACK FLOW PREVENTER
CBC	CALIFORNIA BUILDING CODE
CFC	CALIFORNIA FIRE CODE
CPVC	CHLORINATED POLYVINYL CHLORIDE
DSA	DIVISION OF THE STATE ARCHITECT
FDC	FIRE DEPARTMENT CONNECTION
FM	FACTORY MUTUAL
IBC	INTERNATIONAL BUILDING CODE
N.F.P.A.	NATIONAL FIRE PROTECTION ASSOCIATION
PVC	POLYVINYL CHLORIDE
PIV	POST INDICATOR VALVE
PSI	PRESSURE PER SQUARE INCH
RPDA	REDUCED PRESSURE DETECTOR ASSEMBLY
SQ. IN.	SQUARE INCHES
SQ. FT.	SQUARE FEET
UL	UNDERWRITES LABRATORY

PIPE TABLES

C900, CLASS 150 PVC PIPE ID

NOMINAL	ACTUAL
4"	4.23
6"	6.09
8"	7.98
10"	9.79
12"	11.65

C151, CLASS 350 DUCTILE IRON PIPE ID

NOMINAL	ACTUAL
4"	4.300
6"	6.400
8"	8.550
10"	10.580
12"	12.640

SCH. 40 PIPE ID

NOMINAL	ACTUAL
3/4"	.082"
1"	1.049
1-1/4"	1.380
1-1/2"	1.610
2"	2.067
2-1/2"	2.469
3"	3.068
3-1/2"	3.548
4"	4.026
5"	5.047
6"	6.065
8"	7.981

SCH. 10 PIPE ID

NOMINAL	ACTUAL
1"	1.097
1-1/4"	1.442
1-1/2"	1.682
2"	2.157
2-1/2"	2.635
3"	3.260
3-1/2"	3.760
4"	4.260
5"	5.295
6"	6.357
8"	8.249
10"	10.370



DESIGN NOTES

1. SPRINKLERS
   A. LOCATION:
      DA-01 - BLDG. C
      HAZARD GROUP: ORDINARY HAZARD I & II
      DISCHARGE DENSITY: 0.15/0.20
      QR AREA REDUCTION: NO
      HOSE STREAM ALLOWANCE:
      OUTSIDE: 250 GPM
      INSIDE: 0
      COMBINED: 250 GPM
      DA-02 - BLDG. B
      HAZARD GROUP: LIGHT HAZARD
      DISCHARGE DENSITY: 0.10
      QR AREA REDUCTION: NO
      HOSE STREAM ALLOWANCE:
      OUTSIDE: 100 GPM
      INSIDE: 0
      COMBINED: 100 GPM
2. UNDERGROUND PIPE TYPES (SEE PIPE TABLES)
   A. UNDERGROUND MAINS: C-900 PVC, CLASS 200
   B. UNDERGROUND TRANSITIONS THROUGH WALLS AND UNDER FOOTINGS:
   AWWA C151 DUCTILE IRON, CLASS 350 OR TYPE 304 STAINLESS STEEL
3. BUILDING SYSTEM PIPE TYPES (SEE PIPE TABLES)
   A. MAIN PIPING: BLACK STEEL, SCHEDULE 10
      FITTINGS: GROOVED/WELDED
   B. BRANCH PIPING: BLACK STEEL, SCHEDULE 40
      FITTINGS: THREADED CAST/MALLEABLE IRON
4. SEE SPRINKLER LEGEND ON PLANS FOR SPACING OF SPRINKLERS AND FINISHES

IDENTIFICATION STAMP
DIV. OF THE STATE ARCHITECT
APP: 03-122664 INC:
REVIEWED FOR
SS ☑ FLS ☑ ACS ☑
DATE: 05/12/2023

pjhm architects
LICENSED ARCHITECT RICHARD W. RANDALL NO. C15585 REN. 02/25 STATE OF CALIFORNIA
PROTECTION DESIGN AND CONSULTING
2851 Camino Del Rio S. # 210
San Diego, California 2108
www.protectiondesign.com
phone 619.255.8964
fax 619.255.9547
REGISTERED PROFESSIONAL ENGINEER JONATHAN C. MITCHELL FP 1559 Exp. 06/30/25 FIRE PROTECTION STATE OF CALIFORNIA
OC Office: 24461 Ridge Route Drive #100, Laguna Hills, CA 92653 • OC Phone: 949.498.6191 • SD Office: 804 Pier View Way #103, Oceanside, CA 92054 • SD Phone: 760.730.5527 • LA Office: 837 Traction Avenue, #410, Los Angeles, CA 90013 • LA Phone: 213.278.0172 • Web: pjhm.com

HIGHLAND HIGH SCHOOL
50M POOL & AQUATICS CENTER

KERN HIGH SCHOOL DISTRICT

GENERAL NOTES

FP-1.0

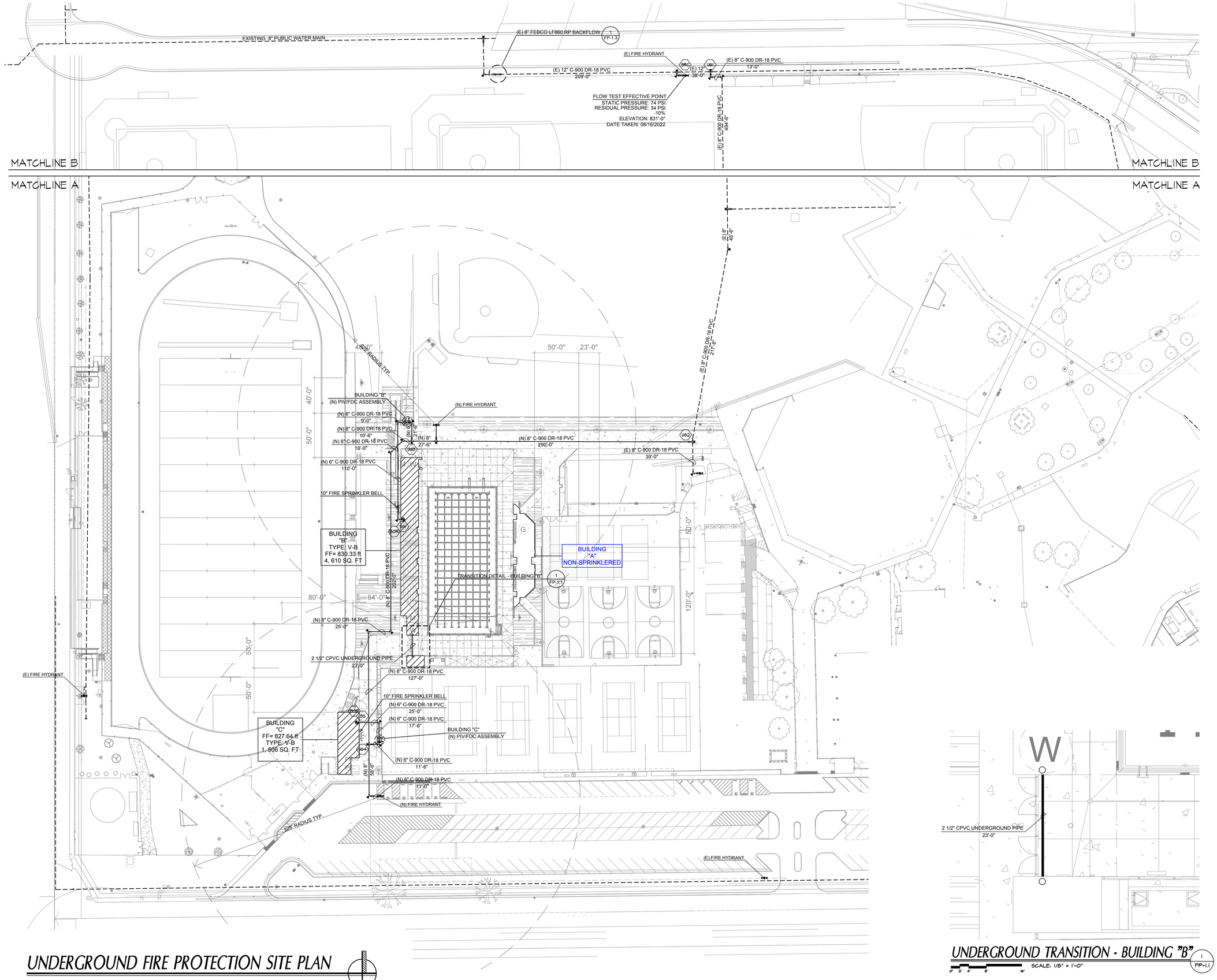

UNDERGROUND FIRE PROTECTION SITE PLAN

SCALE: 1" = 40'-0"

UNDERGROUND TRANSITION - BUILDING "B"

SCALE: 1/8" = 1'-0"

IDENTIFICATION STAMP
DIV. OF THE STATE ARCHITECT
APP: 03-122664 INC:
REVIEWED FOR
SS ☑ FLS ☑ ACS ☑
DATE: 05/12/2023

pjhm architects

LICENSED ARCHITECT
THOMAS W. KRUSE
NO. C15585
REN. 02/25
STATE OF CALIFORNIA

PROTECTION DESIGN AND CONSULTING
2851 Camino Del Rio S. # 210
San Diego, California 2108
www.protectiondesign.com
phone 619.255.8964
fax 619.255.9547

REGISTERED PROFESSIONAL ENGINEER
JONATHAN S. MITCHELL
FP 1559
Exp. 06/30/24
FIRE PROTECTION
STATE OF CALIFORNIA

HIGHLAND HIGH SCHOOL
50M POOL & AQUATICS CENTER

KERN HIGH SCHOOL DISTRICT

FIRE UNDERGROUND SITE PLAN

FP-1.1

OC Office: 24461 Ridge Route Drive #100, Laguna Hills, CA 92653 • OC Phone: 949.496.6191 • SD Office: 804 Pier View Way #103, Oceanside, CA 92054 • SD Phone: 760.730.5527 • LA Office: 837 Traction Avenue, #410, Los Angeles, CA 90013 • LA Phone: 213.278.0172 • Web: pjhm.com

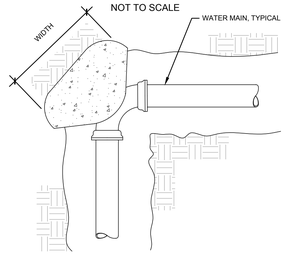

BEND

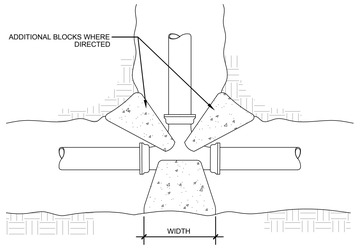

TEE - PLAN

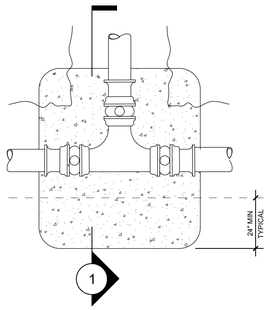

PLAN

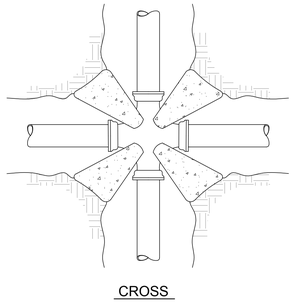

CROSS

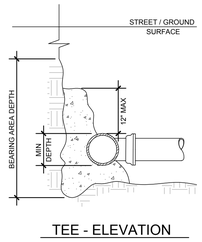

TEE - ELEVATION

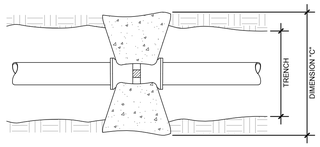

VALVE SUPPORT - PLAN

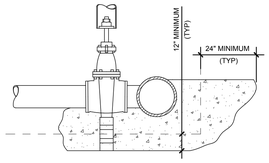

SECTION 1

VALVE SUPPORT BLOCK

VALVE SIZE	DIMENSION "A"	DIMENSION "B"
4"	12"	12"
6"	12"	12"
8"	13"	14"
10"	14"	16"
12"	15"	18"
DIMENSION "C" = TRENCH WIDTH PLUS TWO TIMES THE PIPE DIAMETER		

GENERAL UNDERGROUND PIPING NOTES

1. INSTALLATION SHALL CONFORM TO THE FOLLOWING CODES AND STANDARDS:
   A. N.F.P.A. 24, 2016 ed.
2. ALL MATERIALS INSTALLED SHALL BE UL LISTED AND/OR FM APPROVED FOR FIRE PROTECTION USE, WHERE SUCH A LISTING IS APPLICABLE.
3. PIPING SHALL BE C-900 PVC, DR-18 OR AWWA C151, CLASS 350 DUCTILE IRON AS SHOWN ON PLANS.
4. FITTINGS SHALL BE AWWA C153, CLASS 250 DUCTILE IRON WITH FLANGED OR MECHANICAL JOINT ENDS, AS REQUIRED.
5. MINIMUM COVER SHALL BE 3'-0" IN TRAFFIC ZONES AND 2'-6" IN PEDESTRIAN ZONES.
6. THRUST RESTRAINT PER N.F.P.A. 24, 2016 ed. SHALL BE PROVIDED AT ALL CHANGES OF DIRECTION AND/OR ELEVATION. THRUST BLOCKS SHALL BE OF MINIMUM SIZE AND BEARING AREA SHOWN ON PLANS.
7. PIPE SHALL BE INSTALLED WITH SAND OR NEUTRAL EQUIVALENT MATERIAL SURROUNDING PIPE ZONE, OR AS DIRECTED BY AUTHORITIES HAVING JURISDICTION.
8. ALL PIPE AND FITTINGS BELOW GRADE SHALL BE WRAPPED AND/OR COATED AGAINST CORROSION IN ACCORDANCE WITH FIRE AND WATER DEPARTMENT REQUIREMENTS.
9. ALL PIPE PENETRATING CONCRETE OR MASONRY BUILDING WALLS AND FLOOR SLABS SHALL BE PROVIDED WITH 2" CLEAR SPACE AROUND THE OUTSIDE DIAMETER OF PIPE. HOLES FOR PENETRATIONS SHALL BE SLEEVED OR CORED IN ACCORDANCE WITH THE REQUIREMENTS OF THE AUTHORITY HAVING JURISDICTION. WHERE REQUIRED, RATED FIRESTOP OR WATER SEAL ASSEMBLIES SHALL BE INSTALLED.
10. ALL VALVES CONTROLLING FIRE PROTECTION WATER SUPPLIES SHALL BE EQUIPPED WITH TAMPER SWITCHES AND CONNECTED TO AN APPROVED SUPERVISORY SYSTEM.
11. ALL PIPING AND FITTINGS SHALL BE HYDROSTATICALLY TESTED FOR A MINIMUM OF 2 HOURS AT 200 PSI. AFTER ACCEPTANCE OF THE PRESSURE TEST, ALL PIPING SHALL BE FLUSHED IN ACCORDANCE WITH N.F.P.A. 24 2016 ed.
12. ALL VISUAL INSPECTIONS, HYDROSTATIC TESTING AND FLUSHING OF THE UNDERGROUND PIPING SHALL BE PERFORMED OR WITNESSED BY THE AUTHORITIES HAVING JURISDICTION.

THRUST BLOCK CALCULATIONS AND DETAILS ON SHEET FP-1.2 SHALL BE FOR THE FIRE SERVICE UNDERGROUND PIPING ONLY

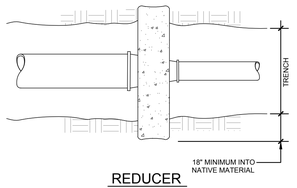

REDUCER

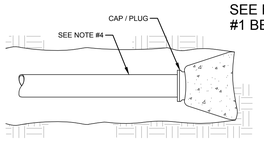

END CAP

SEE NOTE #1 BELOW

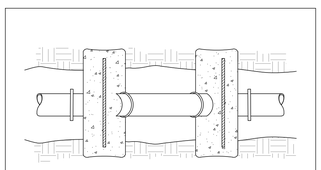

VERT BENDS - PLAN

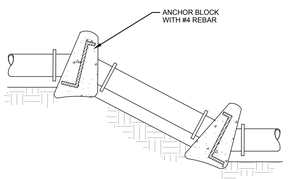

VERT BENDS - ELEVATION

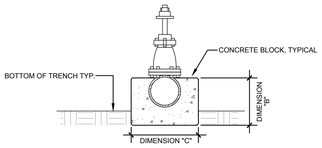

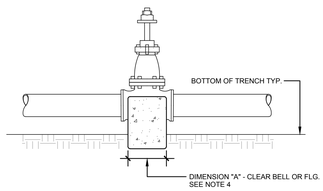

VALVE SUPPORT - ELEVATION

TEE WITH GATE VALES

NOTES:

1). THE ANCHOR BLOCKS ON VERTICAL BENDS REQUIRE ENGINEER APPROVAL.
2). A MINIMUM OF 6" OF CONCRETE SHALL BE POURED ON WETTED UNDISTURBED OR COMPACTED SOIL BENEATH EACH INSTALLATION.
3). TEE SHALL BE CONCRETE BLOCKED A MINIMUM OF 6" ON ALL THREE SIDES.
4). USE 12" - 18" LENGTH OF PIPE BETWEEN THE END CAP AND THE LAST JOINT AS A BOND BREAKER ON DEAD END BLOCKING.
5). BEARING AREA BASED ON SOIL BEARING VALUE OF 1500 PSF AND 225 PSI LINE PRESSURE AND A MINIMUM OF 36" COVER.
   -FOR BEARING = 1000 PSF, 1.5 X AREA SHOWN
   -FOR BEARING = 500 PSF, 3.0 X AREA SHOWN
6). ENGINEER SHALL DETERMINE SIZES, REFER TO SPECIFICATIONS FOR THRUST AND ANCHOR BLOCK SIZING.
7). THRUST BLOCKS SHALL BE CENTERED ON THE FITTING SO THAT THE BEARING AREA IS EXACTLY OPPOSITE THE RESULTANT DIRECTION OF THRUST.
8). CONCRETE SHALL BE PLACED SO THAT FITTINGS AND VALVES ARE ACCESSIBLE FOR REPAIR OR REPLACEMENT.
9). BEARING AREA "B" MUST BE EQUAL TO OR GREATER THAN THE AREA REQUIRED FOR A 90° ELBOW INSTALLATION.
10). INSTALL SAND BAGS AROUND BUTTERFLY VALVE ACTUATOR TO ISOLATE IT FROM CONCRETE.
11). BFV'S INSTALLED AT CROSSES OR TEES REQUIRE A FLANGED DUCTILE IRON SPOOL TO BE INSTALLED BETWEEN THE FITTING AND VALVE IN ACCORDANCE WITH THE SPECIFICATIONS.

THRUST BLOCK CALCULATIONS

INSTALLATION SHALL CONFORM TO N.F.P.A. 13 (2016 ED.), SECTION 10.6.1 (a) TO SOLVE FOR THRUST BLOCK BEARING AREA (A) IN SQUARE INCHES:

WHERE: $A_b = \frac{T}{S_b} \times S_f \times 144$

T = THRUST IN POUNDS FROM NFPA 13 TABLE A-10.6.1.(a)

S_b = SOIL BEARING STRENGTH FROM NFPA 13 TABLE A-10.6.1 (c)
(SEE MATERIALS SUBMITTAL FOR SOIL BEARING STRENGTH REFRENCES.)

(S_f) = SAFETY FACTOR OF 1.5

FITTING SIZE & TYPE MIN. A_b IN SQ. IN.	HEIGHT (h) MIN 1/2 PIPE OD	WIDTH (w) MIN (h) MAX. (2h)	A_b (ACTUAL)
8" 90° /TEE 982.48SQ. IN.	25	40	1000
8" 45° ELBOW 531.68SQ. IN.	20	30	600
6" 90° /TEE 571.10SQ. IN.	20	30	600
6" 45° ELBOW 309.10 SQ. IN.	15	25	375

FOR 8" 90° OR TEE:

$A_b = \frac{9097}{2000} \times 144 \times 1.5$ A_b = 982.48 SQ. IN.

FOR 8" 45° ELBOW:

$A_b = \frac{4923}{2000} \times 144 \times 1.5$ A_b = 531.68 SQ. IN.

FOR 6" 90° OR TEE:

$A_b = \frac{5288}{2000} \times 144 \times 1.5$ A_b = 571.10 SQ. IN.

FOR 6" 45° ELBOW:

$A_b = \frac{2862}{2000} \times 144 \times 1.5$ A_b = 309.10 SQ. IN.

CONCRETE THRUST AND ANCHOR BLOCK INSTALLATIONS

NOT TO SCALE

1
FP-1.2

IDENTIFICATION STAMP
DIV. OF THE STATE ARCHITECT
APP: 03-122664 INC:
REVIEWED FOR
SS ☑ FLS ☑ ACS ☑
DATE: 05/12/2023

pjhm architects
LICENSED ARCHITECT THOMAS W. KRUSE Lic.# C15585 02/21 Renewal Date STATE OF CALIFORNIA
PROTECTION DESIGN AND CONSULTING
2851 Camino Del Rio S. # 210
San Diego, California 2108
www.protectiondesign.com
phone 619.255.8964
fax 619.255.9547
REGISTERED PROFESSIONAL ENGINEER JOHN S. MILLER FP 1559 Exp. 09/30/23 FIRE PROTECTION STATE OF CALIFORNIA
LA Office: 837 Traction Avenue, #410, Los Angeles, CA 90013 • **LA** Phone: 213.278.0172 • Web: pjhm.com
SD Phone: 760.730.5527 • **OC** Office: 24461 Ridge Route Drive #100, Laguna Hills, CA 92653 • **OC** Phone: 949.496.6191 • **SD** Office: 804 Pier View Way #103, Oceanside, CA 92054

HIGHLAND HIGH SCHOOL
50M POOL & AQUATICS CENTER

KERN HIGH SCHOOL DISTRICT

FIRE UNDERGROUND DETAILS

FP-1.2

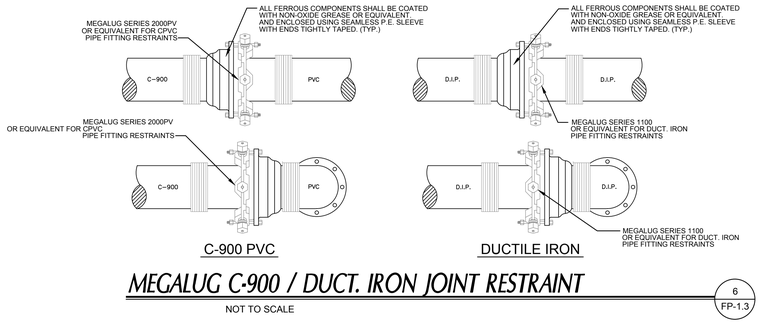

MEGALUG C-900 / DUCT. IRON JOINT RESTRAINT

NOT TO SCALE

6 FP-1.3

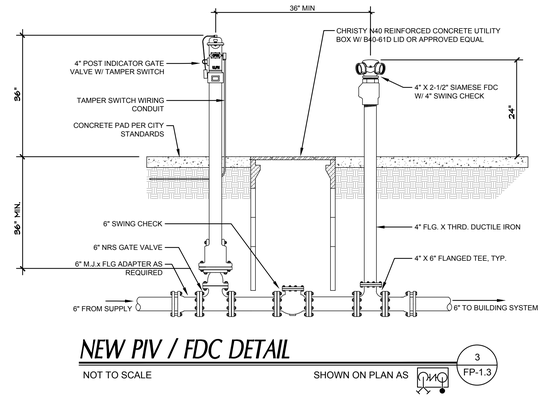

NEW PIV / FDC DETAIL

NOT TO SCALE

SHOWN ON PLAN AS PIV

3 FP-1.3

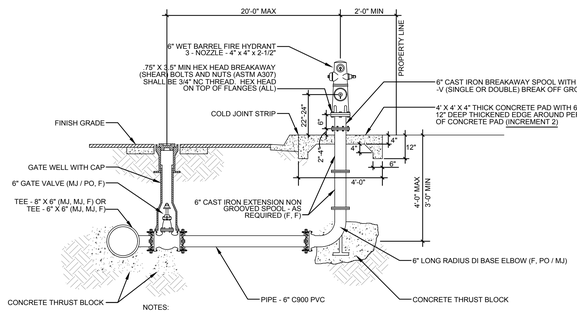

NOTES:

1). NUMBER OF OUTLETS SHALL BE AS SHOWN ON THE PLANS.

2). CONNECT TO BASE OF THE HYDRANT WITH SHEAR BOLTS INSTALLED WITH HEX HEAD ON TOP OF THE FLANGE (31/64" DIAMETER HOLE 2" DEEP IN BOLTS, GALVANIZED AFTER BORING).

NEW FIRE HYDRANT DETAIL

NOT TO SCALE

SHOWN ON PLAN AS

5 FP-1.3

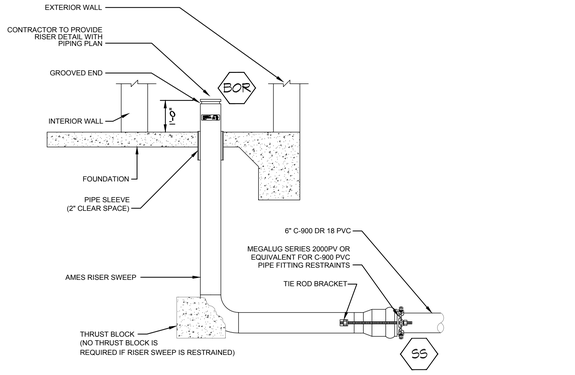

TYPICAL SERVICE ENTRY DETAIL

NOT TO SCALE

SHOWN ON PLAN AS

2 FP-1.3

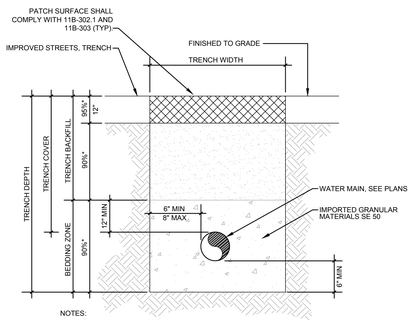

NOTES:

1). (*) INDICATES MINIMUM RELATIVE COMPACTION.

2). MINIMUM COVER: 3' FOR DISTRIBUTION MAINS; 5' FOR TRANSMISSION MAINS.

3). 6" METAL TAPE SHALL BE INSTALLED ABOVE PIPE; 4" BELOW TRENCH CAP AND 12" BELOW FINISH GRADE IN UNIMPROVED STREETS.

4). 1' SAND CUSHION OR A 6" MINIMUM SAND CUSHION WITH 1" NEOPRENE PAD SHALL BE PLACED FOR ALL CROSSINGS UTILITIES WHEN VERTICAL CLEARANCE IS 1' OR LESS. THE NEOPRENE PAD SHALL BE PLACED ON THE MOST FRAGILE UTILITY.

5). FOR MAINS LARGER THAN 16", TRENCH WIDTH SHALL BE AS SHOWN ON THE PLANS

TYPICAL TRENCH SECTION DETAIL

NOT TO SCALE

4 FP-1.3

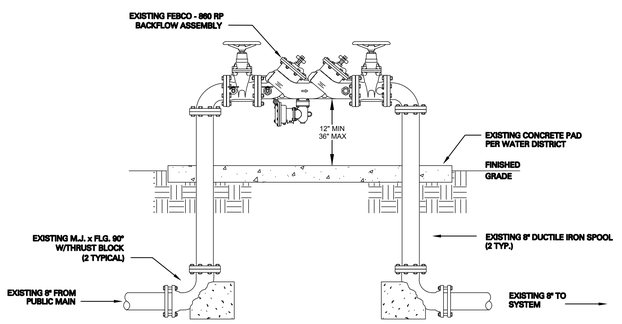

(E) 8" EXISTING FEBCO - 860 RP BACKFLOW DETAIL

NOT TO SCALE

SHOWN ON PLAN AS

1 FP-1.3

IDENTIFICATION STAMP
DIV. OF THE STATE ARCHITECT
APP: 03-122664 INC:
REVIEWED FOR
SS ☑ FLS ☑ ACS ☑
DATE: 05/12/2023

pjhm architects

LICENSED ARCHITECT
THOMAS W. KRUSE
Lic.# C15585
02/21
Renewal Date
STATE OF CALIFORNIA

PROTECTION
DESIGN AND
CONSULTING
2851 Camino Del Rio S. # 210
San Diego, California 2108
www.protectiondesign.com
phone 619.255.8964
fax 619.255.9547

REGISTERED PROFESSIONAL ENGINEER
JOHN S. MILLER
FP 1559
Exp. 04/30/24
FIRE PROTECTION
STATE OF CALIFORNIA

LA Phone: 213.278.0172 • Web: pjhm.com
LA Office: 837 Traction Avenue, #410, Los Angeles, CA 90013 • **SD** Phone: 760.730.5527 • **SD** Office: 804 Pier View Way #103, Oceanside, CA 92054 • **OC** Phone: 949.496.6191 • **OC** Office: 24461 Ridge Route Drive #100, Laguna Hills, CA 92653

HIGHLAND HIGH SCHOOL
50M POOL & AQUATICS CENTER

KERN HIGH SCHOOL DISTRICT

FIRE UNDERGROUND DETAILS

FP-1.3

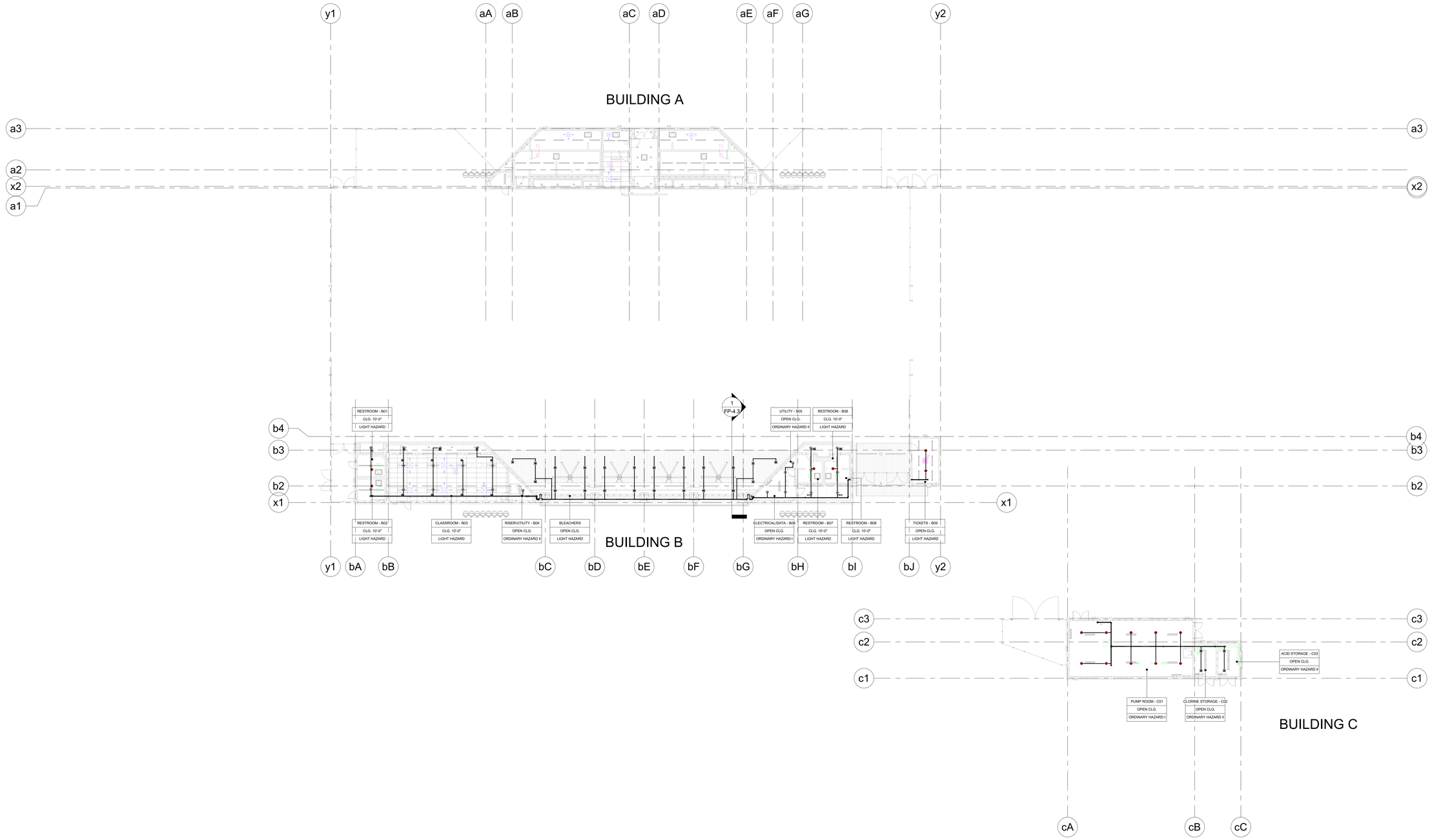

COMPOSITE FIRE SPRINKLER PIPING PLAN
1/16" = 1'-0"

0' 8' 16' 32' 64'

IDENTIFICATION STAMP
DIV. OF THE STATE ARCHITECT
APP: 03-122664 INC:
REVIEWED FOR
SS ☑ FLS ☑ ACS ☑
DATE: 05/12/2023

pjhm architects

LICENSED ARCHITECT
THOMAS W. KRUSE
NO. C15585
REN. 02/25
STATE OF CALIFORNIA

PROTECTION DESIGN AND CONSULTING
2851 Camino Del Rio S. # 210
San Diego, California 2108
www.protectiondesign.com
phone 619.255.8964
fax 619.255.9547

REGISTERED PROFESSIONAL ENGINEER
JONATHAN S. MITCHELL
FP 1559
Exp. 06/30/23
FIRE PROTECTION
STATE OF CALIFORNIA

HIGHLAND HIGH SCHOOL
50M POOL & AQUATICS CENTER

KERN HIGH SCHOOL DISTRICT

FIRE SPRINKLER PIPING PLAN - COMPOSITE

FP-2.0

OC Office: 24461 Ridge Route Drive #100, Laguna Hills, CA 92653 • OC Phone: 949.496.6191 • SD Office: 804 Pier View Way #103, Oceanside, CA 92054 • SD Phone: 760.730.5527 • LA Office: 837 Traction Avenue, #410, Los Angeles, CA 90013 • LA Phone: 213.278.0172 • Web: pjhm.com

3/31/2023 11:52:43 AM

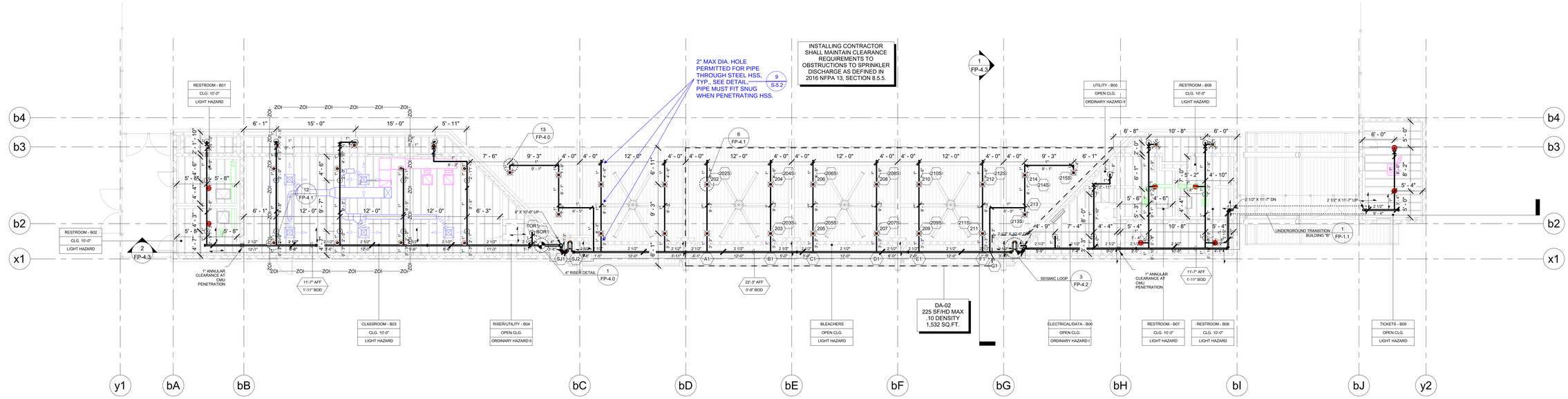

BLDG B - FIRE SPRINKLER PIPING PLAN
1/8" = 1'-0"

0' 4' 8' 16' 32'

FIRE SPRINKLER LEGEND											SPACING		ESCUTCHEON			
SYM	LOCATION	MRF	MODEL	SIN	SR/QR	K-FAC	TYPE	TEMP	FIN	THRD	MIN/MAX	AREA	TYPE	FIN	COMMENTS	TOTAL
	FINISHED CEILING	VIKING	MICROFAST	VK302	QR	5.6 K	SSP	200°	WHITE	1/2"	6'-0"	15'-0" 225 S.F.	RECESSED	WHITE	CORROSION RESISTANT	28
	FINISHED CEILING	VIKING	MICROFAST	VK302	QR	5.6 K	SSP	155°	WHITE	1/2"	6'-0"	15'-0" 225 S.F.	RECESSED	WHITE		8
	FINISHED CEILING	VIKING	MICROFAST	VK462	QR	5.6K	SSP	155°	WHITE	1/2"	6'-0"	15'-0" 225 S.F.	CONCEALED	WHITE		6
	OPEN CEILING	VIKING	MICROFAST	VK300	QR	5.6K	SSU	200°	WHITE	1/2"	6'-0"	15'-0" 225 S.F.	N/A	BRASS		26
															TOTAL THIS SHEET	68

PIPE TYPES

1. MAINS TO BE BLACK SCHEDULE 10 STEEL PIPE, U.O.N.
2. BRANCH LINES TO BE BLACK SCHEDULE 40 STEEL PIPE, U.O.N.

PIPE SIZES

1. MAINS TO BE **4"** NOMINAL DIAMETER PIPE, U.O.N.
2. BRANCH LINES TO BE **1 1/2", 1 1/4" & 1"** NOMINAL DIAMETER PIPE, U.O.N.
3. DROPS & ARM OVERS TO BE **1"** NOMINAL DIAMETER PIPE, U.O.N.

DENOTES FIRESTOP PER 1 / FP-4.2

INSTALLATION NOTES:

HANGERS

1. HANG LINES & MAINS TO WOOD STRUCTURE AT ELEVATIONS NOTED PER DETAIL 3-11 / FP-4.0
2. HANG LINES & MAINS TO STEEL STRUCTURE AT ELEVATIONS NOTED PER DETAIL 12 & 13 / FP-4.0

DENOTES HANGER LOCATION

3. FURNISH RESTRAINING TYPE HANGERS AT THE ENDS OF ALL BRANCHLINES AND AT EVERY **26** FT ALONG THE LINES

DENOTES LATERAL RESTRAINT 1-3 / FP-4.1

4. SEE SHEET **FP-4.1** FOR DETAILS

MAXIMUM SPACING OF RESTRAINTS (ft) STEEL PIPE					
HIGHLAND HS 50M POOL & AQUATICS CENTER					Cp = 0.48
	SEISMIC COEFFICIENT (Cp)				
PIPE SIZE	Cp < 0.50	0.5< Cp <0.71	0.71< Cp <1.40	Cp > 1.40	
1"	43'	36'	26'	22'	
1-1/4"	46'	39'	27'	24'	
1-1/2"	49'	41'	29'	25'	
2"	53'	45'	31'	27'	

SWAY BRACING

1. SWAY BRACING SHALL BE PER NFPA 13, 2016 EDITION AND CBC ED. 2019. SEE **FP-4.1** FOR THE DETAILS AND THE CALCULATIONS. WHERE HANGER RODS ARE LESS THAN 6" IN LENGHT, LATERAL SWAY BRACING MY BE OMITTED

DENOTES SWAY BRACE 8 & 9 / FP-4.1 4 & 5 / FP-4.2

DENOTES 4-WAY SWAY BRACE. A SWAY BRACE ASSEMBLY COULD INCLUDE A LATERAL & LONGITUDINAL BRACE IN COMBINATION. 7 / FP-4.1

HYDRAULIC SYSTEM

THIS BUILDING IS PROTECTED BY A HYDRUALICALLY DESIGNED AUTOMATIC SPRINKLER SYSTEM

Location	BLDG. B - DA-02
Sprinkler Information	
NUMBER OF FLOWING SPRINKLERS	15
MANUFACTURE	VIKING
MODEL	MICROFAST VK302
200°	QR
1/2 ORIFICE	5.6K
Basis of Design	
STANDARD	NFPA 13 2016
HAZARD GROUP	LIGHT HAZARD
DENSITY	0.10 GPM/SQ.FT.
DESIGNED AREA OF DISCHARGED	1,532 SQ. FT.
System Demand	
GPM DEMAND AT THE BASE OF THE RISER	339.4 GPM
RESIDUAL PRESSURE AT THE BASE OF THE RISER	52.4 PSI
GPM DEMAND AT THE WATER SUPPLY SOURCE	439.4 GPM
RESIDUAL PRESSURE AT THE WATER SUPPLY SOURCE	54.5 PSI
HOUSE STREAM ALLOWANCE	100 GPM OUTSIDE
REMOTE SPRINKLER FLOW	14.8 GPM @ 7.0 PSI

PROTECTION DESIGN AND CONSULTING
2851 Camino Del Rio S. # 210
San Diego, California 92108
www.protectiondesign.com
phone 619.255.8964
fax 619.255.9547

3/31/2023 12:29:33 PM

IDENTIFICATION STAMP
DIV. OF THE STATE ARCHITECT
APP: 03-122664 INC:
REVIEWED FOR
SS ☑ FLS ☑ ACS ☑
DATE: 05/12/2023

pjhm architects
LICENSED ARCHITECT RICHARD W. RANSOM NO. C15985 REN. 02/25 STATE OF CALIFORNIA
PROTECTION DESIGN AND CONSULTING
2851 Camino Del Rio S. # 210
San Diego, California 2108
www.protectiondesign.com
phone 619.255.8964
fax 619.255.9547
REGISTERED PROFESSIONAL ENGINEER JONATHAN S. MITCHELL FP 1559 Exp. 09/24 FIRE PROTECTION STATE OF CALIFORNIA
LA Phone: 213.278.0172 • Web: pjhm.com
LA Office: 837 Traction Avenue, #410, Los Angeles, CA 90013 • **SD** Office: 804 Pier View Way #103, Oceanside, CA 92054 •
OC Phone: 760.730.5527 • **OC** Office: 24461 Ridge Route Drive #100, Laguna Hills, CA 92653 •

KERN HIGH SCHOOL DISTRICT

HIGHLAND HIGH SCHOOL
50M POOL & AQUATICS CENTER

(N) BUILDING B - FIRE SPRINKLER PIPING PLAN

FP-2.1

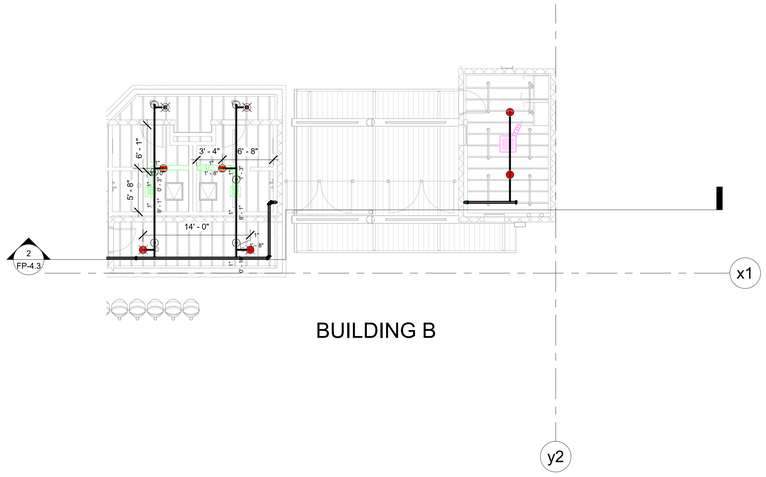

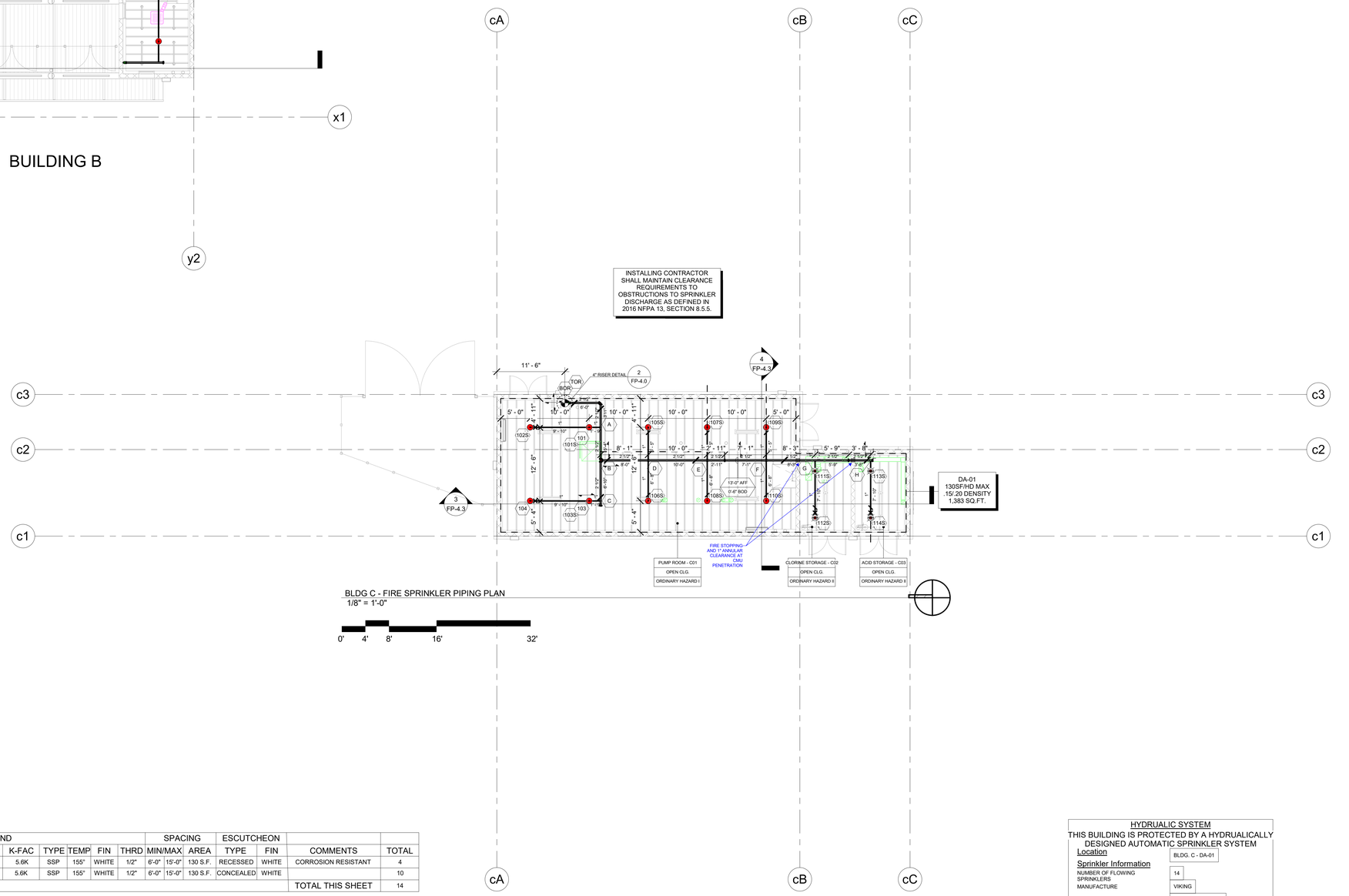

FIRE SPRINKLER LEGEND											SPACING		ESCUTCHEON			
SYM	LOCATION	MRF	MODEL	SIN	SR/QR	K-FAC	TYPE	TEMP	FIN	THRD	MIN/MAX	AREA	TYPE	FIN	COMMENTS	TOTAL
	FINISHED CEILING	VIKING	MICROFAST	VK302	QR	5.6K	SSP	155°	WHITE	1/2"	6'-0"	15'-0"	130 S.F.	RECESSED	WHITE	CORROSION RESISTANT	4
	FINISHED CEILING	VIKING	MICROFAST	VK462	QR	5.6K	SSP	155°	WHITE	1/2"	6'-0"	15'-0"	130 S.F.	CONCEALED	WHITE		10
																TOTAL THIS SHEET	14

INSTALLATION NOTES:

PIPE TYPES

1. MAINS TO BE BLACK SCHEDULE 10 STEEL PIPE, U.O.N.
2. BRANCH LINES TO BE BLACK SCHEDULE 40 STEEL PIPE, U.O.N.

PIPE SIZES

1. MAINS TO BE **4"** NOMINAL DIAMETER PIPE, U.O.N.
2. BRANCH LINES TO BE **1 1/2", 1 1/4" & 1"** NOMINAL DIAMETER PIPE, U.O.N.
3. DROPS & ARM OVERS TO BE **1"** NOMINAL DIAMETER PIPE, U.O.N.

DENOTES FIRESTOP PER 1 / FP-4.2

HANGERS

1. HANG LINES & MAINS TO WOOD STRUCTURE AT ELEVATIONS NOTED PER DETAIL — 3-11 / FP-4.0
2. HANG LINES & MAINS TO STEEL STRUCTURE AT ELEVATIONS NOTED PER DETAIL — 12 & 13 / FP-4.0

DENOTES HANGER LOCATION

3. FURNISH RESTRAINING TYPE HANGERS AT THE ENDS OF ALL BRANCHLINES AND AT EVERY **26** FT ALONG THE LINES

DENOTES LATERAL RESTRAINT — 1-3 / FP-4.1

4. SEE SHEET **FP-4.1** FOR DETAILS

MAXIMUM SPACING OF RESTRAINTS (ft) STEEL PIPE					
HIGHLAND HS 50M POOL & AQUATICS CENTER			Cp = 0.48		
SEISMIC COEFFICIENT (Cp)					
PIPE SIZE	Cp < 0.50	0.5< Cp <0.7	0.71 Cp <1.40	Cp > 1.40	
1"	43'	36'	26'	22'	
1-1/4"	46'	39'	27'	24'	
1-1/2"	49'	41'	29'	25'	
2"	53'	45'	31'	27'	

SWAY BRACING

1. SWAY BRACING SHALL BE PER NFPA 13, 2016 EDITION AND CBC ED. 2019. SEE **FP-4.1** FOR THE DETAILS AND THE CALCULATIONS WHERE HANGER RODS ARE LESS THAN 6" IN LENGHT, LATERAL SWAY BRACING MY BE OMITTED

DENOTES SWAY BRACE — 8 & 9 / FP-4.1 — 4 & 5 / FP-4.2

DENOTES 4-WAY SWAY BRACE. A SWAY BRACE ASSEMBLY COULD INCLUDE A LATERAL & LONGITUDINAL BRACE IN COMBINATION. — 7 / FP-4.1

HYDRUALIC SYSTEM

THIS BUILDING IS PROTECTED BY A HYDRUALICALLY DESIGNED AUTOMATIC SPRINKLER SYSTEM

Location	BLDG. C - DA-01
Sprinkler Information	
NUMBER OF FLOWING SPRINKLERS	14
MANUFACTURE	VIKING
MODEL	MICROFAST VK302
155°	QR
1/2 ORIFICE	5.6K
Basis of Design	
STANDARD	NFPA 13 2016
HAZARD GROUP	ORDINARY HAZARD I & II
DENSITY	0.15/.20 GPM/SQ.FT.
DESIGNED AREA OF DISCHARGED	1,383 SQ. FT.
System Demand	
GPM DEMAND AT THE BASE OF THE RISER	360.4 GPM
RESIDUAL PRESSURE AT THE BASE OF THE RISER	43.4 PSI
GPM DEMAND AT THE WATER SUPPLY SOURCE	610.4 GPM
RESIDUAL PRESSURE AT THE WATER SUPPLY SOURCE	44.8 PSI
HOUSE STREAM ALLOWANCE	250 GPM OUTSIDE
REMOTE SPRINKLER FLOW	24.0 GPM @ 18.4 PSI

PROTECTION DESIGN AND CONSULTING
2851 Camino Del Rio S. # 210
San Diego, California 92108
www.protectiondesign.com
phone 619.255.8964
fax 619.255.9547

3/31/2023 12:30:52 PM

IDENTIFICATION STAMP
DIV. OF THE STATE ARCHITECT
APP: 03-122664 INC:
REVIEWED FOR
SS ☑ FLS ☑ ACS ☑
DATE: 05/12/2023

pjhm architects
LICENSED ARCHITECT RICHARD W. RANSOM NO. C15985 REN. 02/25 STATE OF CALIFORNIA
PROTECTION DESIGN AND CONSULTING
2851 Camino Del Rio S. # 210
San Diego, California 2108
www.protectiondesign.com
phone 619.255.8964
fax 619.255.9547
REGISTERED PROFESSIONAL ENGINEER JOHNNY J. MILLER FP 1559 Exp. 04/24/25 FIRE PROTECTION STATE OF CALIFORNIA
LA Phone: 213.278.0172 • Web: pjhm.com
LA Office: 837 Traction Avenue, #410, Los Angeles, CA 90013
SD Phone: 760.730.5527 • **SD** Office: 804 Pier View Way #103, Oceanside, CA 92054
OC Phone: 949.496.6191 • **OC** Office: 24461 Ridge Route Drive #100, Laguna Hills, CA 92653

HIGHLAND HIGH SCHOOL
50M POOL & AQUATICS CENTER

KERN HIGH SCHOOL DISTRICT

(N) BUILDING C - FIRE SPRINKLER PIPING PLAN

FP-2.2

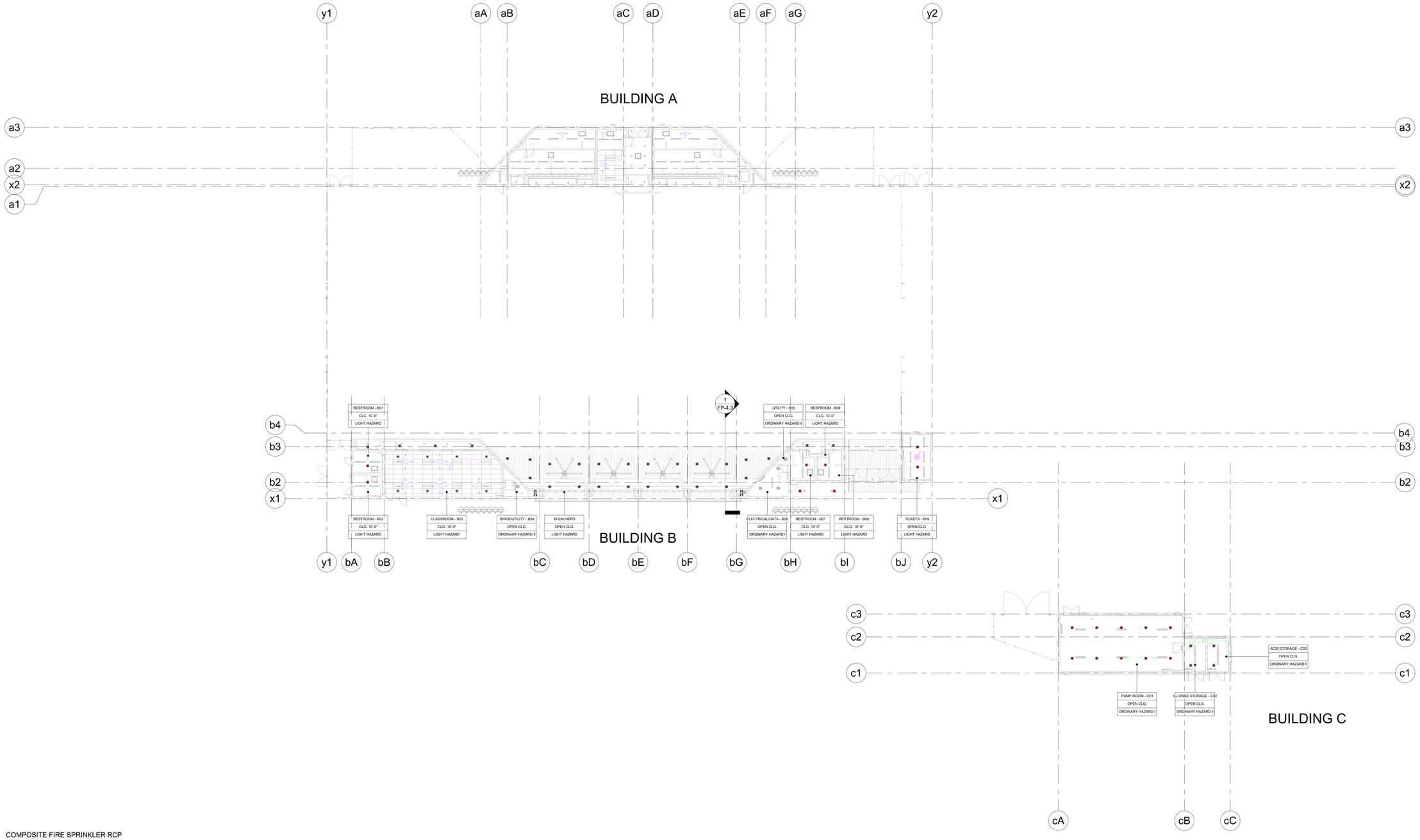

COMPOSITE FIRE SPRINKLER RCP PLAN
1/16" = 1'-0"

0' 8' 16' 32' 64'

3/31/2023 11:53:05 AM

IDENTIFICATION STAMP
DIV. OF THE STATE ARCHITECT
APP: 03-122664 INC:
REVIEWED FOR
SS ☑ FLS ☑ ACS ☑
DATE: 05/12/2023

pjhm architects

LICENSED ARCHITECT
RICHARD W. RANSOM
No. C15985
REN. 02/25
STATE OF CALIFORNIA

PROTECTION DESIGN AND CONSULTING
2851 Camino Del Rio S. # 210
San Diego, California 2108
www.protectiondesign.com
phone 619.255.8964
fax 619.255.9547

REGISTERED PROFESSIONAL ENGINEER
JOHNATHAN S. MITCHELL
FP 1559
Exp. 09/30/23
FIRE PROTECTION
STATE OF CALIFORNIA

LA Office: 837 Traction Avenue, #410, Los Angeles, CA 90013 • **LA** Phone: 213.278.0172 • Web: pjhm.com
OC Office: 24461 Ridge Route Drive #100, Laguna Hills, CA 92653 • **OC** Phone: 949.496.6191 • **SD** Office: 804 Pier View Way #103, Oceanside, CA 92054 • **SD** Phone: 760.730.5527

HIGHLAND HIGH SCHOOL
50M POOL & AQUATICS CENTER

KERN HIGH SCHOOL DISTRICT

FIRE SPRINKLER RCP PLAN - COMPOSITE

FP-3.0

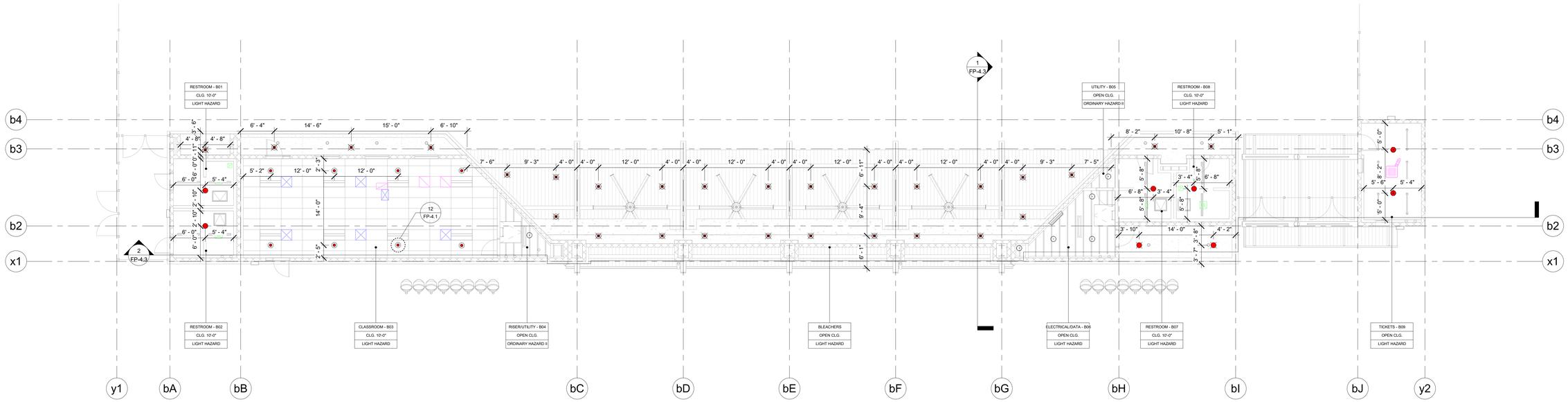

BLDG B - FIRE SPRINKLER RCP PLAN
1/8" = 1'-0"

0' 4' 8' 16' 32'

IDENTIFICATION STAMP
DIV. OF THE STATE ARCHITECT
APP: 03-122664 INC:
REVIEWED FOR
SS ☑ FLS ☑ ACS ☑
DATE: 05/12/2023

pjhm architects

LICENSED ARCHITECT
THOMAS W. KRUSE
NO. C15585
REN. 02/25
STATE OF CALIFORNIA

PROTECTION DESIGN AND CONSULTING
2851 Camino Del Rio S. # 210
San Diego, California 2108
www.protectiondesign.com
phone 619.255.8964
fax 619.255.9547

REGISTERED PROFESSIONAL ENGINEER
JONATHAN S. MITCHELL
FP 1559
Exp. 06/30/24
FIRE PROTECTION
STATE OF CALIFORNIA

HIGHLAND HIGH SCHOOL
50M POOL & AQUATICS CENTER

KERN HIGH SCHOOL DISTRICT

(N) BUILDING B - FIRE SPRINKLER RCP PLAN

FP-3.1

OC Office: 24461 Ridge Route Drive #100, Laguna Hills, CA 92653 • OC Phone: 949.496.6191 • SD Office: 804 Pier View Way #103, Oceanside, CA 92054 • SD Phone: 760.730.5527 • LA Office: 837 Traction Avenue, #410, Los Angeles, CA 90013 • LA Phone: 213.278.0172 • Web: pjhm.com

3/31/2023 11:53:09 AM

OC Office: 24461 Ridge Route Drive #100, Laguna Hills, CA 92653 • **OC** Phone: 949.496.6191 • **SD** Office: 804 Pier View Way #103, Oceanside, CA 92054 • **SD** Phone: 760.730.5527 • **LA** Office: 837 Traction Avenue, #410, Los Angeles, CA 90013 • **LA** Phone: 213.278.0172 • Web: plhm.com

(N) - BUILDING C - FIRE SPRINKLER RCP PLAN

FP-3.2

HIGHLAND HIGH SCHOOL
50M POOL & AQUATICS CENTER

KERN HIGH SCHOOL DISTRICT

PROTECTION DESIGN AND CONSULTING
2851 Camino Del Rio S. # 210
San Diego, CA 92108
www.protectiondesign.com
phone 619.255.8644
fax 619.255.8647

plhm architects

IDENTIFICATION STAMP
DIV. OF THE STATE ARCHITECT
APP: 03-122664 INC: A
REVIEWED FOR
SS ☑ FLS ☑ ACS ☑
DATE: 05/12/2023

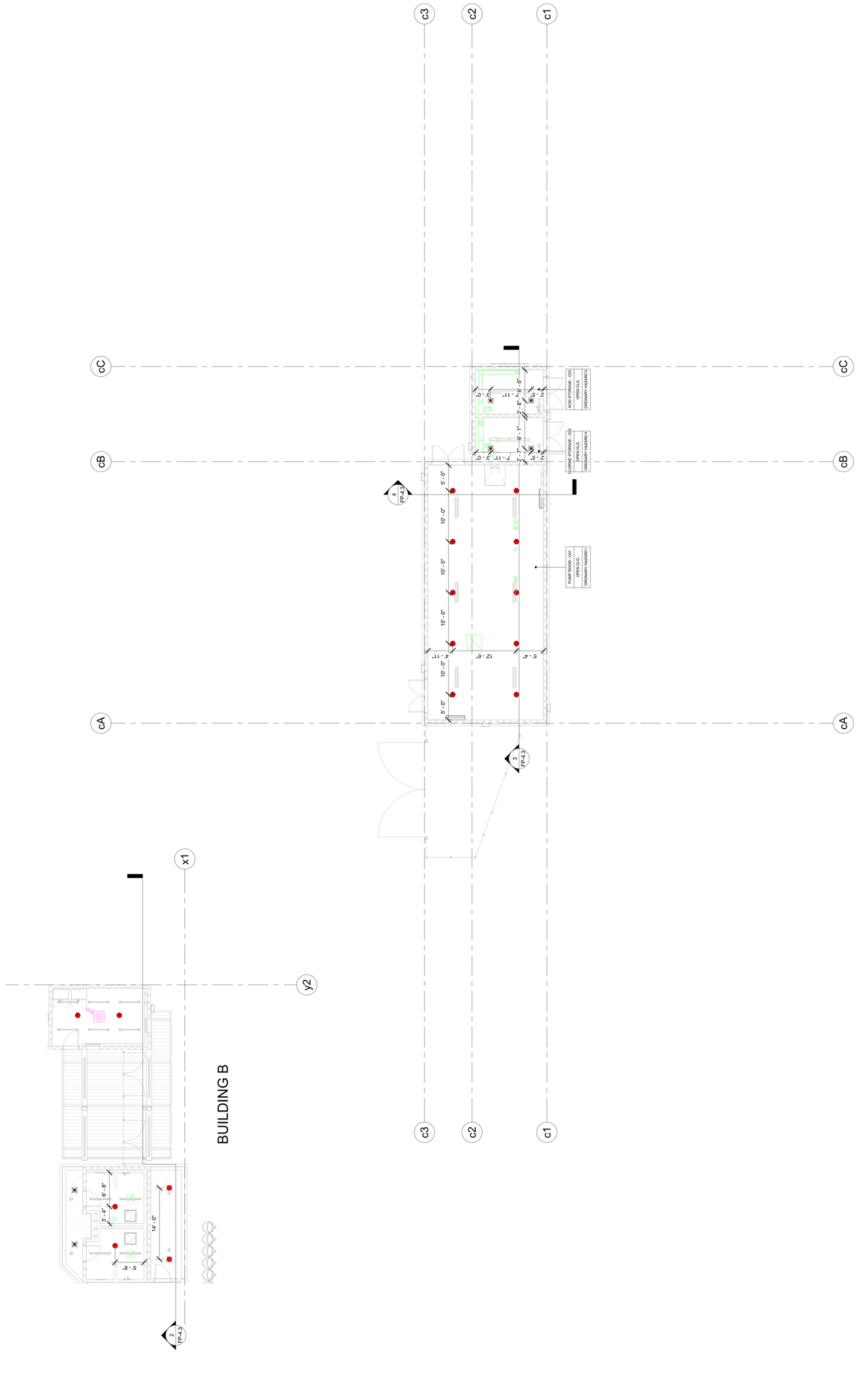

3/31/2023 11:53:12 AM

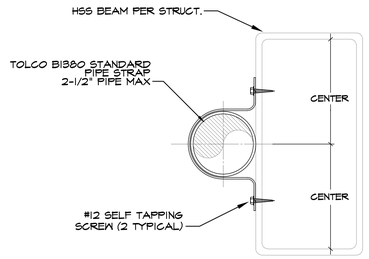

HSS BOX BEAM HANGER DETAIL

NO SCALE — SHOWN ON PLAN AS — 13 / FP-4.0

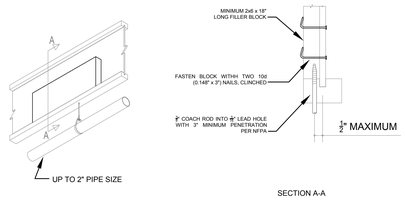

VERTICAL MOUNT

NOT TO SCALE — SHOWN ON PLAN AS — 9 / FP-4.0

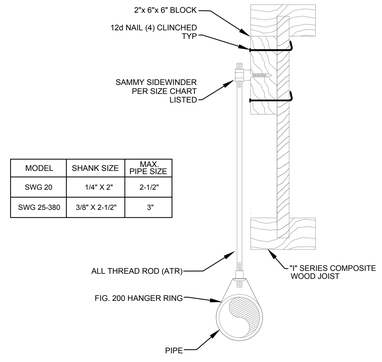

MODEL	SHANK SIZE	MAX. PIPE SIZE
SWG 20	1/4" X 2"	2-1/2"
SWG 25-380	3/8" X 2-1/2"	3"

SAMMY SIDEWINDER

NOT TO SCALE — SHOWN ON PLAN AS — 5 / FP-4.0

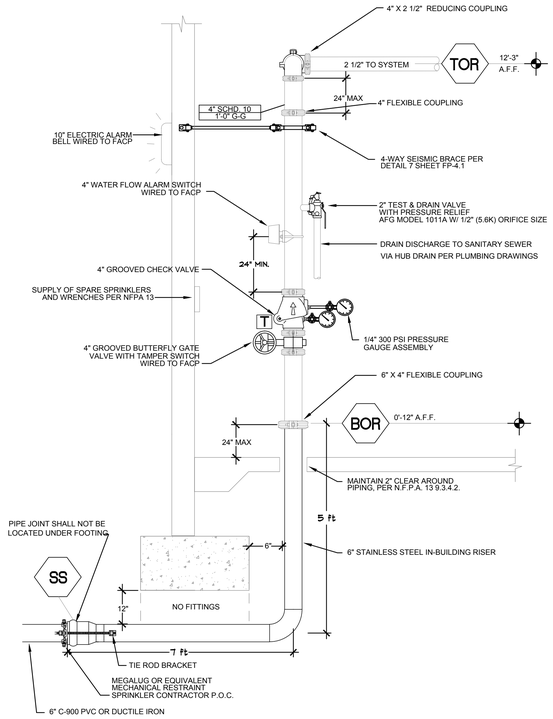

RISER DETAIL BLDG. C

NOT TO SCALE — SHOWN ON PLANS AS — 2 / FP-4.0

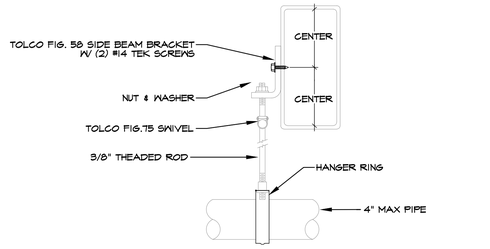

HSS BOX BEAM HANGER DETAIL

NO SCALE — SHOWN ON PLAN AS — 12 / FP-4.0

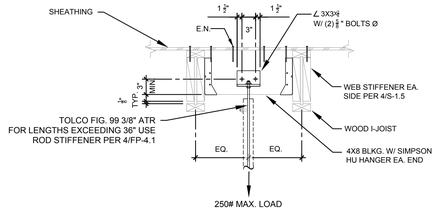

ROD HANGER AT WOOD I-JOIST

NOT TO SCALE — SHOWN ON PLAN AS — 8 / FP-4.0

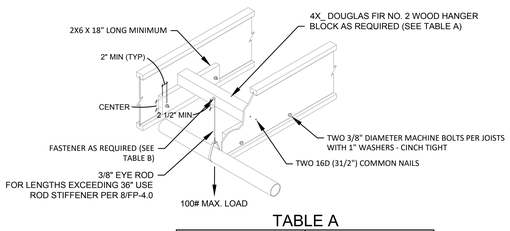

TABLE A

DISTANCE BETWEEN JOISTS	WOOD HANGER BLOCK SIZE
48" or less	4x6
96"	4x8

TABLE B

PIPE SIZE	FASTENER
3"	¼" x 3" lag screw
5"	¼" x 4" lag screw
6"	⅜" diameter bolt

COMPOSITE WOOD JOIST TRAPEZE

NOT TO SCALE — SHOWN ON PLAN AS — 11 / FP-4.0

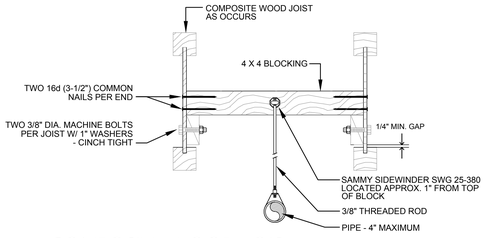

COMPOSITE WOOD JOIST TRAPEZE FOR 4" PIPE

NOT TO SCALE — SHOWN ON PLAN AS — 10 / FP-4.0

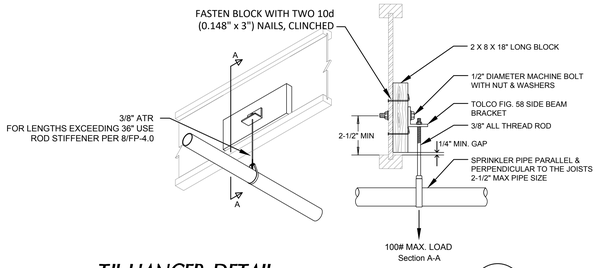

TJI HANGER DETAIL

NOT TO SCALE — SHOWN ON PLAN AS — 7 / FP-4.0

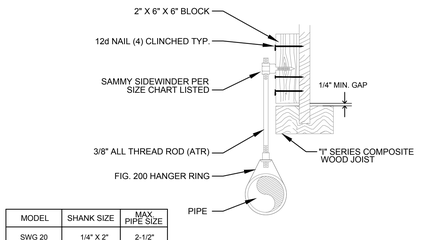

MODEL	SHANK SIZE	MAX. PIPE SIZE
SWG 20	1/4" X 2"	2-1/2"
SWG 25-380	3/8" X 2-1/2"	3"

SAMMY SIDEWINDER (I-JOIST STRUCTURE)

NOT TO SCALE — SHOWN ON PLAN AS — 6 / FP-4.0

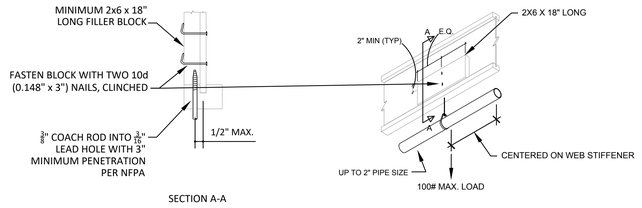

Screw penetration into web is allowed

VERTICAL MOUNT (MANUFACTURER'S DETAIL)

NOT TO SCALE — SHOWN ON PLAN AS — 4 / FP-4.0

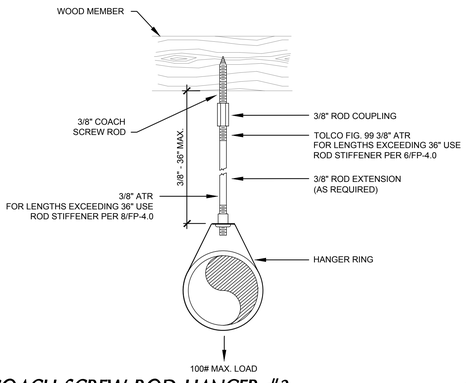

COACH SCREW ROD HANGER #3

NO SCALE — SHOWN ON PLAN AS — 3 / FP-4.0

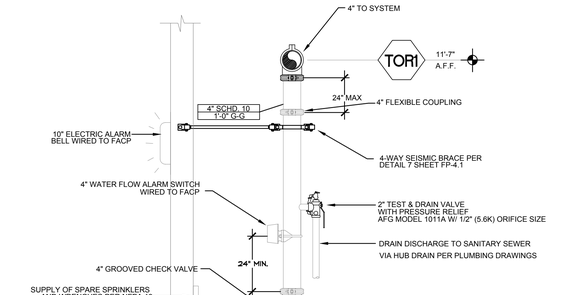

RISER DETAIL BLDG. B

NOT TO SCALE — SHOWN ON PLANS AS — 1 / FP-4.0

IDENTIFICATION STAMP
DIV. OF THE STATE ARCHITECT
APP: 03-122664 INC:
REVIEWED FOR
SS ☑ FLS ☑ ACS ☑
DATE: 05/12/2023

pjhm architects

LICENSED ARCHITECT
RICHARD W. RANDALL
REN. 02/25
STATE OF CALIFORNIA

PROTECTION DESIGN AND CONSULTING
2851 Camino Del Rio S. # 210
San Diego, California 2108
www.protectiondesign.com
phone 619.255.8964
fax 619.255.9547

REGISTERED PROFESSIONAL ENGINEER
JONATHAN S. MILLARD
FP 1559
Exp. 09/30/24
FIRE PROTECTION
STATE OF CALIFORNIA

LA Phone: 213.278.0172 • Web: pjhm.com
LA Office: 837 Traction Avenue, #410, Los Angeles, CA 90013 • SD Phone: 760.730.5527 • SD Office: 804 Pier View Way #103, Oceanside, CA 92054 • OC Phone: 949.496.6191 • OC Office: 24461 Ridge Route Drive #100, Laguna Hills, CA 92653

HIGHLAND HIGH SCHOOL
50M POOL & AQUATICS CENTER

KERN HIGH SCHOOL DISTRICT

DETAILS

FP-4.0

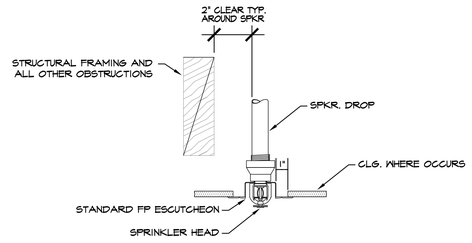

FIRE SPRINKLER CEILING DETAIL

NOT TO SCALE — 12 / FP-4.1

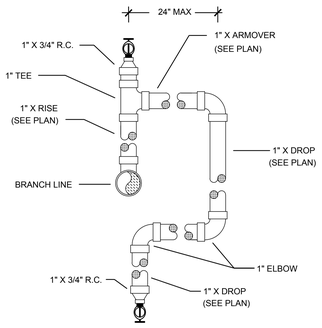

PEND. SPRIG ARM BACK DET.

NOT TO SCALE — 11 / FP-4.1

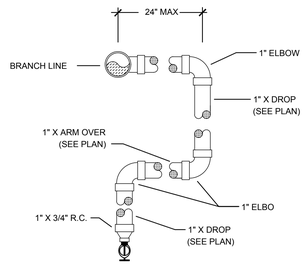

DROP PENDANT ARM BACK DET.

NOT TO SCALE — 10 / FP-4.1

FOR LOADS PERPENDICULAR TO I-JOIST

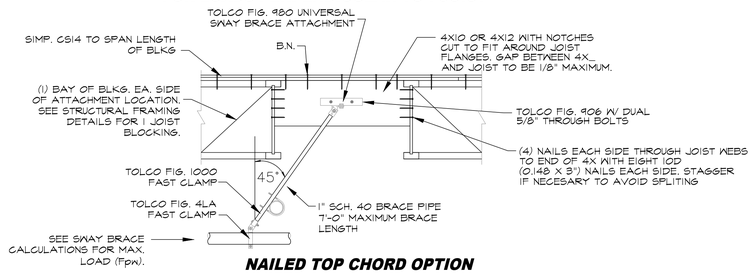

NAILED TOP CHORD OPTION

ALLOWABLE HORIZONTAL SEISMIC LOADS (lbs)

ANGLE TO VERTICAL (α)		
30°	45°	60°
340	590	600

(1) 600 IF CONNECTIONS IS CENTERED ON THE 4X

* LOADS ARE BASED ON THE CONTROLLING CONNECTION TO THE JOIST.
* THE CAPACITY OF THE BRACE FASTENER TO THE WOOD BLOCK MAY LIMIT OF THE CAPACITY OF THE DETAIL (see NFPA 13).
* LOADS INCLUDE A 1.60 DURATION FACTOR ADJUSTMENT.

LONGITUDINAL AND LATERAL SEISMIC BRACE AT I-JOIST

SHOWN ON PLAN AS — 9 / FP-4.1

FOR LOADS PARALLEL TO I-JOIST JOIST

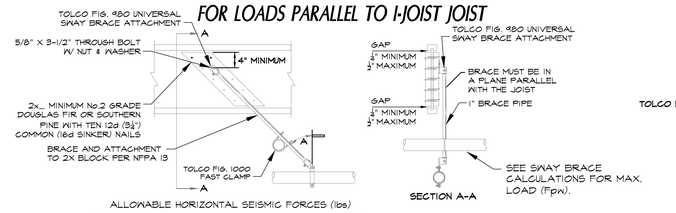

ALLOWABLE HORIZONTAL SEISMIC FORCES (lbs)

BLOCKING CONDITION	ANGLE TO VERTICAL (α)		
	30°	45°	60°
2x_ ON ONE SIDE	440	620	760
2x_ ON BOTH SIDES	520	730	900

* THE LOADS ARE BASED ON THE CONTROLLING CONNECTION TO THE JOIST.
* LOADS INCLUDE A 1.60 DURATION FACTOR ADJUSTMENT.

SWAY BRACE AT I-JOIST

NOT TO SCALE — SHOWN ON PLAN AS — 8 / FP-4.1

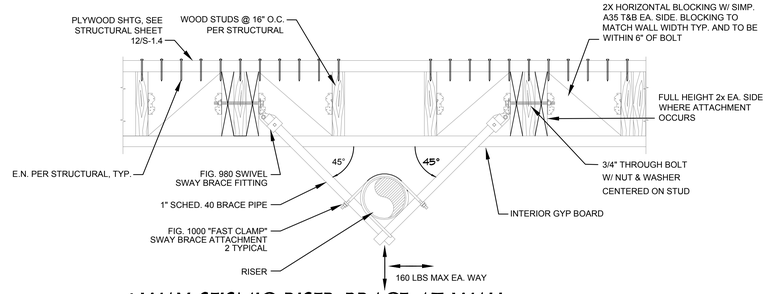

4-WAY SEISMIC RISER BRACE AT WALL

NOT TO SCALE — SHOWN ON PLAN AS — 7 / FP-4.1

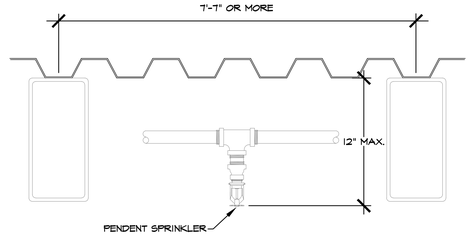

UNOBSTRUCTED CONSTRUCTION SPRINKLER CLEARANCES

NOT TO SCALE — 6 / FP-4.1

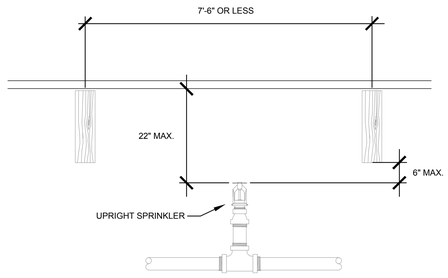

OBSTRUCTED CONSTRUCTION SPRINKLER CLEARANCES

NOT TO SCALE — 5 / FP-4.1

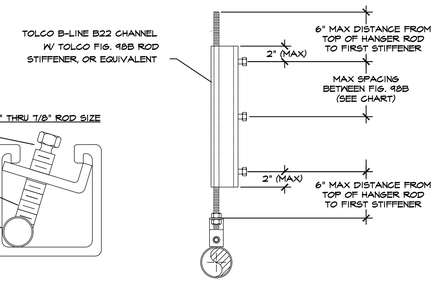

ROD SIZE	MAX. ROD LENGTH WITHOUT ROD STIFFENER	MAX. SPACING BETWEEN TOLCO FIG. 98
3/8"	36"	18"

COMPRESSION STRUT FOR ROD HANGER

NOT TO SCALE — 4 / FP-4.1

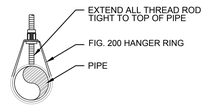

ROD STIFFENER DETAIL

NOT TO SCALE — SHOWN ON PLAN AS — 3 / FP-4.1

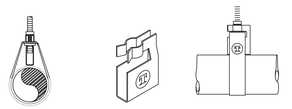

TOLCO FIG. 25 SURGE RESTRAINT

TYPE 1- FOR 1" AND 1-1/4" PIPE AND HANGER
TYPE 2 - FOR 1-1/2" AND 2" PIPE AND HANGER

TOLCO FIG. 25 IS DESIGNED TO BE USED ONLY WITH TOLCO BAND HANGERS FIG. 200 TO RESTRAIN THE UPWARD MOVEMENT OF PIPE AS IT OCCURS DURING SPRINKLER HEAD ACTIVATION OR SEISMIC ACTIVITY

LATERAL RESTRAINTS SHALL BE LOCATED WITHIN 2'-0" OF HANGER. THIS HANGER SHALL BE USED ALONG WITH VERTICAL RESTRAINTS.

VERTICAL RESTRAINT

NOT TO SCALE — SHOWN ON PLAN AS — 2 / FP-4.1

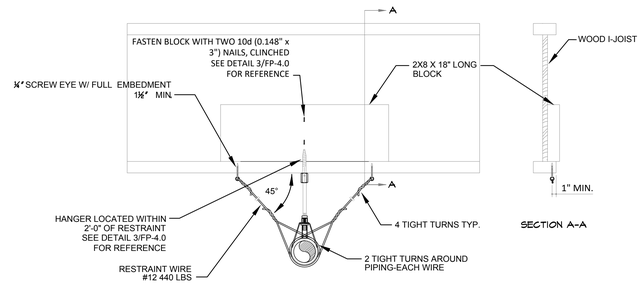

PIPE PERPENDICULAR TO I-JOIST

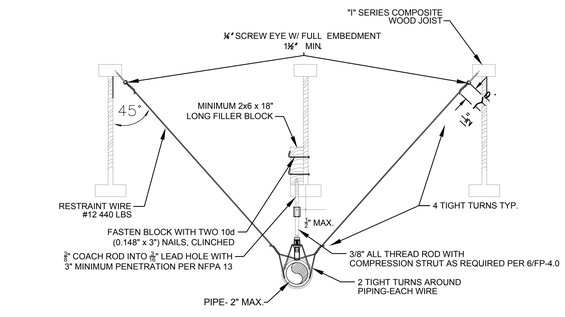

PIPE PARALLEL TO I-JOIST

SPLAY-WIRE LATERAL DETAIL (I-JOIST STRUCTURE)

NOT TO SCALE — SHOWN ON PLAN AS — 1 / FP-4.1

IDENTIFICATION STAMP
DIV. OF THE STATE ARCHITECT
APP: 03-122664 INC:
REVIEWED FOR
SS ☑ FLS ☑ ACS ☑
DATE: 05/12/2023

pjhm architects

LICENSED ARCHITECT
RICHARD W. RINNERT
No. C15985
REN. 02/25
STATE OF CALIFORNIA

PROTECTION
DESIGN AND
CONSULTING
2851 Camino Del Rio S. # 210
San Diego, California 2108
www.protectiondesign.com
phone 619.255.8964
fax 619.255.9547

REGISTERED PROFESSIONAL ENGINEER
JONATHAN S. MILLER
FP 1559
Exp. 09/30/23
FIRE PROTECTION
STATE OF CALIFORNIA

OC Office: 24461 Ridge Route Drive #100, Laguna Hills, CA 92653 • OC Phone: 949.498.6191 • SD Office: 804 Pier View Way #103, Oceanside, CA 92054 • SD Phone: 760.730.5527 • LA Office: 837 Traction Avenue, #410, Los Angeles, CA 90013 • LA Phone: 213.278.0172 • Web: pjhm.com

HIGHLAND HIGH SCHOOL
50M POOL & AQUATICS CENTER

KERN HIGH SCHOOL DISTRICT

DETAILS

FP-4.1

TOLBrace™ Seismic Bracing Calculations

V8.8.118

Project Address: 22-27 Highland HS Aquatic
2900 Royal Scots Way
Bakersfield, CA 93306
Job # 20-27

Contractor:
Address:
Phone:
Licence:

Calculations based on 2016 NFPA Pamphlet #13

Brace Information

Maximum Brace Length	7' 0" (2.134 m)
Diameter of Brace	1"
Type of Brace	Sch.40
Angle of Brace	45° Min.
Least Rad. of Gyration	0.42" (11 mm)
L/R Value	200
Max Horizontal Load	1310 lbs (594 kg)
Other Requirements - FM Approved Loads	

Fastener Information

Orientation to Connecting Surface	NFPA Type H
Fastener	
Type	5/8in. x 3 1/2in. Thru Bolt
Diameter	5/8in.
Length	3 1/2in.
Maximum Load	405 lbs (184 kg)
Prying Factor	N/A

TOLCO™ Brace Components

TOLCO™ Component	Listed Load	Adjusted Load
Fig. 1001 Clamp	1130 lbs (513 kg)	1130 lbs (513 kg)
Fig.980 - 5/8" Universal Swive	2790 lbs (1266 kg)	2790 lbs (1266 kg)
See Fastener Information		

*Calculation Based on CONCENTRIC Loading
*Please Note: These calculations are for TOLCO™ components only. Use of any other components voids these calculations and the listing of the assembly.

Seismic Brace Assembly Detail

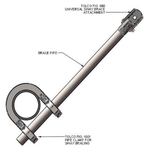

Brace Identification on Plans Lateral Sway Brace-H
Brace Type Lateral [X] Longitudinal [ ] 4-Way [ ]

Sprinkler System Load Calculation (Fpw = CpWp)

Cp = 0.4848

Diameter	Type	Length	Total Length	Weight Per Unit Length	Total Weight
2.5" (65 mm)	Sch. 10	25 ft (7.6 m)	25 ft (7.6 m)	5.89 lb/ft (8.77 kg/m)	147 lbs (67 kg)
1" (25 mm)	Sch. 40	65.5 ft (20 m)	65.5 ft (20 m)	2.05 lb/ft (3.05 kg/m)	134 lbs (61 kg)

Subtotal Weight	281 lbs (127 kg)
Wp (incl. 15%)	323 lbs (147 kg)
Total (Fpw)	157 lbs (71 kg)
Maximum Fpw per 9.3.5.5.2 (if applicable)	513 lb (232 kg)

Main Size	Type/Sch.	Spacing (ft)
2.5"	Sch. 10	25

(TOLBrace™ Version 8) Use of TOLBrace™ is subject to terms and conditions per the end user license agreement

2 1/2" LATERAL I-JOIST EQB CALC - TYPE H

TOLBrace™ Seismic Bracing Calculations

V8.8.118

Project Address: 22-27 Highland HS Aquatic
2900 Royal Scots Way
Bakersfield, CA 93306
Job # 20-27

Contractor:
Address:
Phone:
Licence:

Calculations based on 2016 NFPA Pamphlet #13

Brace Information

Maximum Brace Length	7' 0" (2.134 m)
Diameter of Brace	1"
Type of Brace	Sch.40
Angle of Brace	45° Min.
Least Rad. of Gyration	0.42" (11 mm)
L/R Value	200
Max Horizontal Load	1310 lbs (594 kg)
Other Requirements - FM Approved Loads	

Fastener Information

Orientation to Connecting Surface	NFPA Type B
Fastener	
Type	5/8in. x 3 1/2in. Thru Bolt
Diameter	5/8in.
Length	3 1/2in.
Maximum Load	285 lbs (129 kg)
Prying Factor	N/A

TOLCO™ Brace Components

TOLCO™ Component	Listed Load	Adjusted Load
Fig. 1001 Clamp	1130 lbs (513 kg)	1130 lbs (513 kg)
Fig.980 - 5/8" Universal Swive	2790 lbs (1266 kg)	2790 lbs (1266 kg)
See Fastener Information		

*Calculation Based on CONCENTRIC Loading
*Please Note: These calculations are for TOLCO™ components only. Use of any other components voids these calculations and the listing of the assembly.

Seismic Brace Assembly Detail

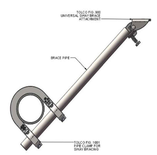

Brace Identification on Plans Lateral Sway Brace
Brace Type Lateral [X] Longitudinal [ ] 4-Way [ ]

Sprinkler System Load Calculation (Fpw = CpWp)

Cp = 0.4848

Diameter	Type	Length	Total Length	Weight Per Unit Length	Total Weight
2.5" (65 mm)	Sch. 10	25 ft (7.6 m)	25 ft (7.6 m)	5.89 lb/ft (8.77 kg/m)	147 lbs (67 kg)
1" (25 mm)	Sch. 40	65.5 ft (20 m)	65.5 ft (20 m)	2.05 lb/ft (3.05 kg/m)	134 lbs (61 kg)

Subtotal Weight	281 lbs (127 kg)
Wp (incl. 15%)	323 lbs (147 kg)
Total (Fpw)	157 lbs (71 kg)
Maximum Fpw per 9.3.5.5.2 (if applicable)	513 lb (232 kg)

Main Size	Type/Sch.	Spacing (ft)
2.5"	Sch. 10	25

(TOLBrace™ Version 8) Use of TOLBrace™ is subject to terms and conditions per the end user license agreement

2 1/2" LATERAL I-JOIST EQB CALC - TYPE B

TOLBrace™ Seismic Bracing Calculations

V8.8.118

Project Address: 22-27 Highland HS Aquatic
2900 Royal Scots Way
Bakersfield, CA 93306
Job # 20-27

Contractor:
Address:
Phone:
Licence:

Calculations based on 2016 NFPA Pamphlet #13

Brace Information

Maximum Brace Length	7' 0" (2.134 m)
Diameter of Brace	1"
Type of Brace	Sch.40
Angle of Brace	45° Min.
Least Rad. of Gyration	0.42" (11 mm)
L/R Value	200
Max Horizontal Load	1310 lbs (594 kg)
Other Requirements - FM Approved Loads	

Fastener Information

Orientation to Connecting Surface	NFPA Type B
Fastener	
Type	5/8in. x 3 1/2in. Thru Bolt
Diameter	5/8in.
Length	3 1/2in.
Maximum Load	285 lbs (129 kg)
Prying Factor	N/A

TOLCO™ Brace Components

TOLCO™ Component	Listed Load	Adjusted Load
Fig. 1001 Clamp	1130 lbs (513 kg)	1130 lbs (513 kg)
Fig.980 - 5/8" Universal Swive	2790 lbs (1266 kg)	2790 lbs (1266 kg)
See Fastener Information		

*Calculation Based on CONCENTRIC Loading
*Please Note: These calculations are for TOLCO™ components only. Use of any other components voids these calculations and the listing of the assembly.

Seismic Brace Assembly Detail

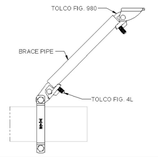

Brace Identification on Plans Longitudinal Sway Brace
Brace Type Lateral [ ] Longitudinal [X] 4-Way [ ]

Sprinkler System Load Calculation (Fpw = CpWp)

Cp = 0.4848

Diameter	Type	Length	Total Length	Weight Per Unit Length	Total Weight
2.5" (65 mm)	Sch. 10	75 ft (22.9 m)	75 ft (22.9 m)	5.89 lb/ft (8.77 kg/m)	442 lbs (200 kg)

Subtotal Weight	442 lbs (200 kg)
Wp (incl. 15%)	508 lbs (231 kg)
Total (Fpw)	246 lbs (112 kg)
Maximum Fpw per 9.3.5.5.2 (if applicable)	N/A

Main Size	Type/Sch.	Spacing (ft)
2.5"	Sch. 10	75

(TOLBrace™ Version 8) Use of TOLBrace™ is subject to terms and conditions per the end user license agreement

2 1/2" LONGITUDINAL I-JOIST EQB CALC - TYPE B

TOLBrace™ Seismic Bracing Calculations

V8.8.118

Project Address: 22-27 Highland HS Aquatic
2900 Royal Scots Way
Bakersfield, CA 93306
Job # 20-27

Contractor:
Address:
Phone:
Licence:

Calculations based on 2016 NFPA Pamphlet #13

Brace Information

Maximum Brace Length	7' 0" (2.134 m)
Diameter of Brace	1"
Type of Brace	Sch.40
Angle of Brace	45° Min.
Least Rad. of Gyration	0.42" (11 mm)
L/R Value	200
Max Horizontal Load	1310 lbs (594 kg)
Other Requirements - FM Approved Loads	

Fastener Information

Orientation to Connecting Surface	NFPA Type H
Fastener	
Type	5/8in. x 3 1/2in. Thru Bolt
Diameter	5/8in.
Length	3 1/2in.
Maximum Load	405 lbs (184 kg)
Prying Factor	N/A

TOLCO™ Brace Components

TOLCO™ Component	Listed Load	Adjusted Load
Fig. 4L Clamp	650 lbs (295 kg)	650 lbs (295 kg)
Fig.980 - 5/8" Universal Swive	2790 lbs (1266 kg)	2790 lbs (1266 kg)
See Fastener Information		

*Calculation Based on CONCENTRIC Loading
*Please Note: These calculations are for TOLCO™ components only. Use of any other components voids these calculations and the listing of the assembly.

Seismic Brace Assembly Detail

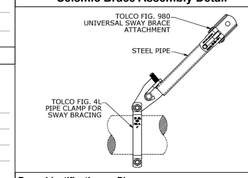

Brace Identification on Plans Longitudinal Sway Brace-H
Brace Type Lateral [ ] Longitudinal [X] 4-Way [ ]

Sprinkler System Load Calculation (Fpw = CpWp)

Cp = 0.4848

Diameter	Type	Length	Total Length	Weight Per Unit Length	Total Weight
2.5" (65 mm)	Sch. 10	75 ft (22.9 m)	75 ft (22.9 m)	5.89 lb/ft (8.77 kg/m)	442 lbs (200 kg)

Subtotal Weight	442 lbs (200 kg)
Wp (incl. 15%)	508 lbs (231 kg)
Total (Fpw)	246 lbs (112 kg)
Maximum Fpw per 9.3.5.5.2 (if applicable)	N/A

Main Size	Type/Sch.	Spacing (ft)
2.5"	Sch. 10	75

(TOLBrace™ Version 8) Use of TOLBrace™ is subject to terms and conditions per the end user license agreement

2 1/2" LONGITUDINAL I-JOIST EQB CALC - TYPE H

TOLBrace™ Seismic Bracing Calculations

V8.8.118

Project Address: 22-27 Highland HS Aquatic
2900 Royal Scots Way
Bakersfield, CA 93306
Job # 20-27

Contractor:
Address:
Phone:
Licence:

Calculations based on 2016 NFPA Pamphlet #13

Brace Information

Maximum Brace Length	7' 0" (2.134 m)
Diameter of Brace	1"
Type of Brace	Sch.40
Angle of Brace	45° Min.
Least Rad. of Gyration	0.42" (11 mm)
L/R Value	200
Max Horizontal Load	1310 lbs (594 kg)
Other Requirements - FM Approved Loads	

Fastener Information

Orientation to Connecting Surface	NFPA Type E
Fastener	
Type	1/2in. Unfinished Steel Bolt
Diameter	1/2in.
Length	N/A
Maximum Load	2050 lbs (930 kg)
Prying Factor	N/A

TOLCO™ Brace Components

TOLCO™ Component	Listed Load	Adjusted Load
Fig. 4L Clamp	650 lbs (295 kg)	650 lbs (295 kg)
Fig.980 - 1/2" Universal Swive	2790 lbs (1266 kg)	2790 lbs (1266 kg)
See Fastener Information		

*Calculation Based on CONCENTRIC Loading
*Please Note: These calculations are for TOLCO™ components only. Use of any other components voids these calculations and the listing of the assembly.

Seismic Brace Assembly Detail

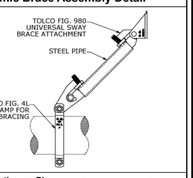

Brace Identification on Plans Longitudinal Sway Brace-E-1
Brace Type Lateral [ ] Longitudinal [X] 4-Way [ ]

Sprinkler System Load Calculation (Fpw = CpWp)

Cp = 0.4848

Diameter	Type	Length	Total Length	Weight Per Unit Length	Total Weight
2.5" (65 mm)	Sch. 10	75 ft (22.9 m)	75 ft (22.9 m)	5.89 lb/ft (8.77 kg/m)	442 lbs (200 kg)

Subtotal Weight	442 lbs (200 kg)
Wp (incl. 15%)	508 lbs (231 kg)
Total (Fpw)	246 lbs (112 kg)
Maximum Fpw per 9.3.5.5.2 (if applicable)	N/A

Main Size	Type/Sch.	Spacing (ft)
2.5"	Sch. 10	75

(TOLBrace™ Version 8) Use of TOLBrace™ is subject to terms and conditions per the end user license agreement

2 1/2" LONGITUDINAL HSS EQB CALC - TYPE E

TOLBrace™ Seismic Bracing Calculations

V8.8.118

Project Address: 22-27 Highland HS Aquatic
2900 Royal Scots Way
Bakersfield, CA 93306
Job # 20-27

Contractor:
Address:
Phone:
Licence:

Calculations based on 2016 NFPA Pamphlet #13

Brace Information

Maximum Brace Length	7' 0" (2.134 m)
Diameter of Brace	1"
Type of Brace	Sch.40
Angle of Brace	45° Min.
Least Rad. of Gyration	0.42" (11 mm)
L/R Value	200
Max Horizontal Load	1310 lbs (594 kg)
Other Requirements - FM Approved Loads	

Fastener Information

Orientation to Connecting Surface	NFPA Type E
Fastener	
Type	1/2in. Unfinished Steel Bolt
Diameter	1/2in.
Length	N/A
Maximum Load	2050 lbs (930 kg)
Prying Factor	N/A

TOLCO™ Brace Components

TOLCO™ Component	Listed Load	Adjusted Load
Fig. 4L Clamp	650 lbs (295 kg)	650 lbs (295 kg)
Fig.980 - 1/2" Universal Swive	2790 lbs (1266 kg)	2790 lbs (1266 kg)
See Fastener Information		

*Calculation Based on CONCENTRIC Loading
*Please Note: These calculations are for TOLCO™ components only. Use of any other components voids these calculations and the listing of the assembly.

Seismic Brace Assembly Detail

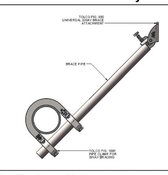

Brace Identification on Plans Lateral Sway Brace Steel-E
Brace Type Lateral [X] Longitudinal [ ] 4-Way [ ]

Sprinkler System Load Calculation (Fpw = CpWp)

Cp = 0.4848

Diameter	Type	Length	Total Length	Weight Per Unit Length	Total Weight
2.5" (65 mm)	Sch. 10	25 ft (7.6 m)	25 ft (7.6 m)	5.89 lb/ft (8.77 kg/m)	147 lbs (67 kg)
1" (25 mm)	Sch. 40	65.5 ft (20 m)	65.5 ft (20 m)	2.05 lb/ft (3.05 kg/m)	134 lbs (61 kg)

Subtotal Weight	281 lbs (127 kg)
Wp (incl. 15%)	323 lbs (147 kg)
Total (Fpw)	157 lbs (71 kg)
Maximum Fpw per 9.3.5.5.2 (if applicable)	513 lb (232 kg)

Main Size	Type/Sch.	Spacing (ft)
2.5"	Sch. 10	25

(TOLBrace™ Version 8) Use of TOLBrace™ is subject to terms and conditions per the end user license agreement

2 1/2" LATERAL HSS EQB CALC - TYPE E

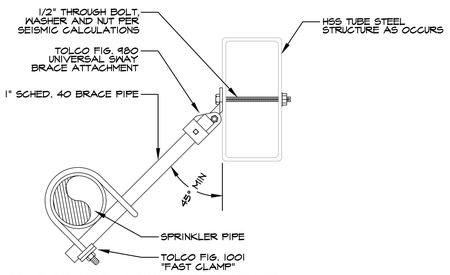

LATERAL EQB TO HSS TUBE STEEL

NOT TO SCALE — SHOWN ON PLAN AS — 5 FP-4.2

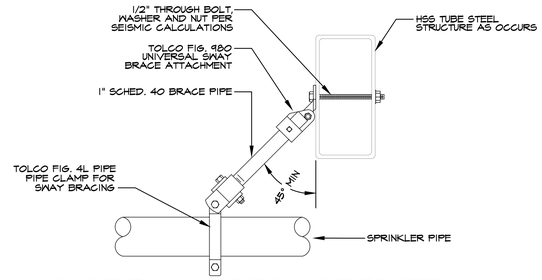

LONGITUDINAL EQB TO HSS TUBE STEEL

NOT TO SCALE — SHOWN ON PLAN AS — 4 FP-4.2

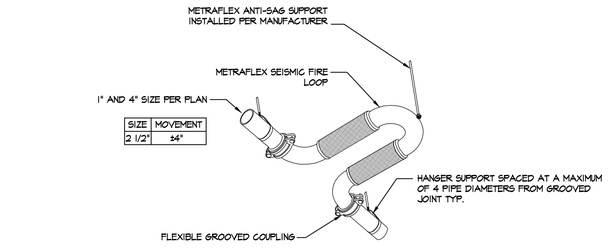

METRAFLEX SEISMIC LOOP

NOT TO SCALE — 3 FP-4.2

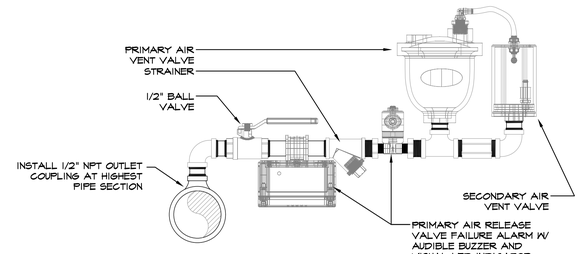

AUTOMATIC DUAL AIR-RELEASE VALVE DETAIL

NOT TO SCALE — SHOWN ON PLAN AS — 2 FP-4.2

SYSTEM NO. C - AJ - 1154
F - RATINGS - 3 HOUR
T RATING - 1/4 HOUR
L RATING AT AMBIENT - LESS THAN 1 CFM / SQ. FT.
L RATING AT 400° F - 4 CFM / SQ. FT.

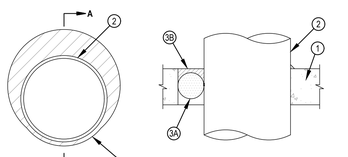

SECTION A-A

1. FLOOR OR WALL ASSEMBLY - MINIMUM 4-1/2" THICK REINFORCED LIGHTWEIGHT OR NORMAL WEIGHT (100-150 PCF) CONCRETE. WALL MAY ALSO BE CONSTRUCTED OF ANY UL CLASSIFIED CONCRETE BLOCKS. MAXIMUM DIAMETER OF OPENING IS 14".

3. THROUGH PENETRANTS - ONE METALLIC PIPE, TUBING OR CONDUIT TO BE INSTALLED CONCENTRICALLY OR ECCENTRICALLY WITHIN THE FIRESTOP SYSTEM. THE ANNULAR SPACE SHALL BE MINIMUM 0" TO MAXIMUM 3-1/4". PIPE, CONDUIT OR TUBING TO BE RIGIDLY SUPPORTED ON BOTH SIDES OF WALL ASSEMBLY. THE FOLLOWING TYPES AND SIZES OF METALLIC PIPS, CONDUITS OR TUBING MAY BE USED:

   A. STEEL PIPE - NOMINAL 10" DIAMETER (OR SMALLER) SCHEDULE 10 (OR HEAVIER) STEEL PIPE.
   B. CONDUIT - NOMINAL 4" DIAMETER (OR SMALLER) ELECTRICAL METALLIC TUBING OR RIGID STEEL CONDUIT.
   C. COPPER TUBING - NOMINAL 4" DIAMETER (OR SMALLER) TYPE L (OR HEAVIER) COPPER TUBE.
   D. COPPER PIPE - NOMINAL 4" DIAMETER (OR SMALLER) REGULAR (OR HEAVIER) COPPER PIPE.

4. FIRESTOP SYSTEM - THE FIRESTOP SYSTEM SHALL CONSIST OF THE FOLLOWING:

   A. PACKING MATERIAL - MINERAL WOOL BATT INSULATION FIRMLY PACKED INTO OPENINGS AS A PERMANENT FORM. PACKING MATERIAL TO BE RECESSED FROM THE TOP SURFACE OF THE FLOOR OR FROM BOTH SURFACES OF A WALL AS REQUIRED TO ACCOMMODATE THE REQUIRED THICKNESS OF FILL MATERIAL. AS AN OPTION TO THE ABOVE, BACKER ROD AND / OR FOAMED PLASTIC BACKER MATERIAL MAY BE USED.

   B. FILL VOID OR CAVITY MATERIALS - SEALANT - MIN 1/2" THICKNESS OF FILL MATERIAL APPLIED WITHIN THE ANNULUS, FLUSH WITH TOP SURFACE OF FLOOR OR BOTH SURFACES OF WALL. AT THE POINT CONTACT LOCATION BETWEEN PIPE AND CONCRETE, A MINIMUM 1/2" DIAMETER BEAD OF FILL MATERIAL SHALL BE APPLIED AT THE CONCRETE / PIPE INTERFACE ON THE TOP SURFACE OF FLOOR AND BOTH SURFACES OF A WALL.

HILTI CONSTRUCTION CHEMICALS, DIV OF HILTI INC. - FS-ONE SEALANT
*BEARING THE UL CLASSIFICATION MARK

CAJ 1154
HILTI FIRESTOP SYSTEMS c UL us

CONCRETE FIRE STOP PENETRATION

NOT TO SCALE — SHOWN ON PLAN AS — 1 FP-4.2

IDENTIFICATION STAMP
DIV. OF THE STATE ARCHITECT
APP: 03-122664 INC:
REVIEWED FOR
SS ☑ FLS ☑ ACS ☑
DATE: 05/12/2023

pjhm architects
LA Phone: 213.278.0172 • Web: pjhm.com

LICENSED ARCHITECT
RICHARD W. RANDALL
No. C15985
REN. 02/25
STATE OF CALIFORNIA

PROTECTION DESIGN AND CONSULTING
2851 Camino Del Rio S. # 210
San Diego, California 2108
www.protectiondesign.com
phone 619.255.8964
fax 619.255.9547

REGISTERED PROFESSIONAL ENGINEER
JONATHAN S. MILLARD
FP 1559
Exp. 06/30/23
FIRE PROTECTION
STATE OF CALIFORNIA

OC Office: 24461 Ridge Route Drive #100, Laguna Hills, CA 92653 • SD Phone: 760.730.5527 • LA Office: 837 Traction Avenue, #410, Los Angeles, CA 90013 • OC Phone: 949.496.6191 • SD Office: 804 Pier View Way #103, Oceanside, CA 92054 • LA Phone: 213.278.0172 • Web: pjhm.com

HIGHLAND HIGH SCHOOL
50M POOL & AQUATICS CENTER

KERN HIGH SCHOOL DISTRICT

DETAILS

FP-4.2

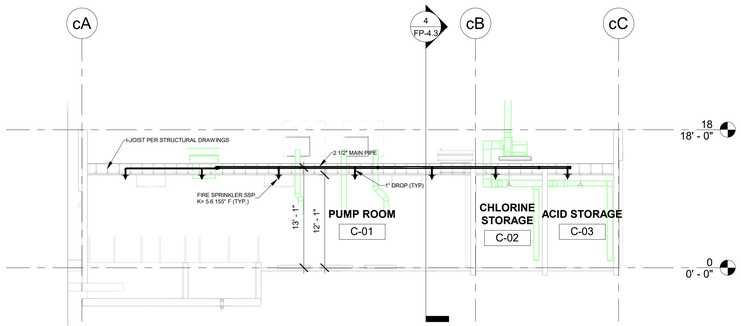

Building C - Section 3
1/8" = 1'-0"

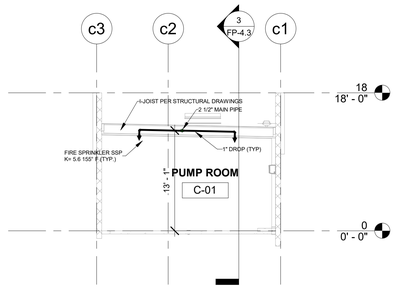

Building C - Section 4
1/8" = 1'-0"

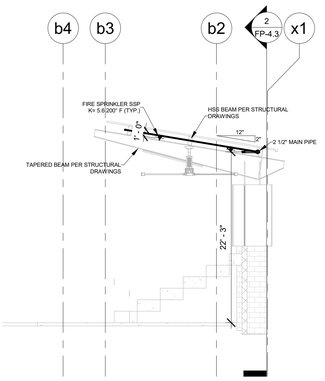

Building B - Section 1
1/8" = 1'-0"

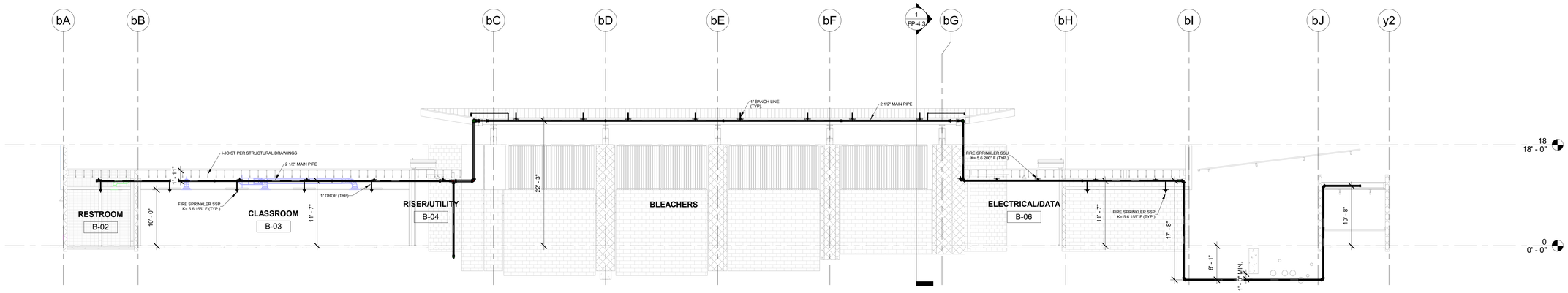

Building B - Section 2
1/8" = 1'-0"

0' 4' 8' 16' 32'

3/31/2023 11:56:24 AM

IDENTIFICATION STAMP
DIV. OF THE STATE ARCHITECT
APP: 03-122664 INC:
REVIEWED FOR
SS ☑ FLS ☑ ACS ☑
DATE: 05/12/2023

pjhm architects

LICENSED ARCHITECT
THOMAS W. KRUSE
NO. C15585
REN. 02/25
STATE OF CALIFORNIA

PROTECTION
DESIGN AND
CONSULTING
2851 Camino Del Rio S. # 210
San Diego, California 2108
www.protectiondesign.com
phone 619.255.8964
fax 619.255.9547

REGISTERED PROFESSIONAL ENGINEER
JONATHAN S. MITCHELL
FP 1559
Exp. 06/30/24
FIRE PROTECTION
STATE OF CALIFORNIA

HIGHLAND HIGH SCHOOL
50M POOL & AQUATICS CENTER

KERN HIGH SCHOOL DISTRICT

SECTIONS

FP-4.3

OC Office: 24461 Ridge Route Drive #100, Laguna Hills, CA 92653 • OC Phone: 949.496.6191 • SD Office: 804 Pier View Way #103, Oceanside, CA 92054 • SD Phone: 760.730.5527 • LA Office: 837 Traction Avenue, #410, Los Angeles, CA 90013 • LA Phone: 213.278.0172 • Web: pjhm.com

ABBREVIATIONS

4S/DP	4" SQUARE BY 2-1/8" DEEP BOX	GFCI	GROUND FAULT CIRCUIT INTERRUPTER	NO	NORMALLY OPENED
ADA	AMERICAN WITH DISABILITIES ACT	GFP	GROUND FAULT PROTECTION	NF	NON-FUSED
A.F.F.	ABOVE FINISH FLOOR	GE or GEC	GROUNDING ELECTRODE CONDUCTOR	NIC	NOT IN CONTRACT
A.F.G.	ABOVE FINISH GRADE	HACR	HEATING AIR CONDITIONING REFRIGERATION	N.T.S.	NOT TO SCALE
AWG	AMERICAN WIRE GAUGE			NL	NIGHT LIGHT
AMP, A	AMPERE	HOA	HAND-OFF-AUTO	NO. or #	NUMBER
A.I.C. or AIC	AMPERES INTERRUPTING CAPACITY (SYMMETRICAL)	HVAC	HEATING, VENTILATING AND AIR CONDITIONING	OFCI	OWNER FURNISHED, CONTRACTOR INSTALLED
A.F.C. or AFC	AVAILABLE FAULT CURRENT	H.,W.,D.,L.	HEIGHT, WIDTH, DEPTH, LENGTH	%Z	PERCENT IMPEDANCE
AF/AT	AMP FRAME, AMP TRIP	HID	HIGH INTENSITY DISCHARGE	PH. or ø	PHASE
AHJ	AUTHORITY HAVING JURISDICTION	HP	HORSEPOWER	PC	PHOTOCELL
AS/AF	AMP SWITCH, AMP FUSE	HPS	HIGH PRESSURE SODIUM	P.C.	PLUMBING CONTRACTOR
ATS	AUTOMATIC TRANSFER SWITCH	IN. or "	INCHES	P	POLE
AVG	AVERAGE	I/G	ISOLATED GROUND	PVC	POLY VINYL CHLORIDE
BJ	BONDING JUMPER	IBC	INTERNATIONAL BUILDING CODE	PDU	POWER DISTRIBUTION UNIT
BDF	BUILDING DISTRIBUTION FRAME	I.D.C.S.	INTEGRATED DIMMING CONTROL PANEL	PRIMARY	OVER 600 VOLTS
BR	BRANCH	IDF	INTERMEDIATE DISTRIBUTION FRAME	PROVIDE	FURNISH, INSTALL AND CONNECT
BLDG	BUILDING	JBOX	JUNCTION BOX	PT	POTENTIAL TRANSFORMER
CBC	CALIFORNIA BUILDING CODE	K	DEGREE KELVIN	PA	PUBLIC ADDRESS
CEC	CALIFORNIA ELECTRICAL CODE	KCMIL	THOUSAND CIRCULAR MILS	(R)	DENOTES RELOCATED DEVICE
CIRC., CKT.	CIRCUIT	KVA	KILOVOLT AMPERES		LOCATION.
CB	CIRCUIT BREAKER	KW	KILOWATT	REC, RECEPT	RECEPTACLE
CSFD	COMBINATION SMOKE FIRE DAMPER	KWH	KILOWATT HOUR	REF	REFRIGERATOR
C	CONDUIT	LCL	LONG CONTINUOUS LOAD	RGS	RIGID GALVANIZED STEEL
C.O.	CONDUIT ONLY, COMPLETE WITH PULLSTRING	LF., L.F.	LINEAR FEET	RMS	ROOT MEAN SQUARE
		LTG, LTS	LIGHTING	SCC	SHORT CIRCUIT CURRENT
CONN	CONNECTED	LPS	LOW PRESSURE SODIUM	SCCR	SHORT CIRCUIT CURRENT RATING
CPT	CONTROL POWER TRANSFORMER	MAX.	MAXIMUM	SCS	STRUCTURED CABLING SYSTEM
CLCB	CURRENT LIMITING CIRCUIT BREAKER	MBJ	MAIN BONDING JUMPER	SFD	SMOKE FIRE DAMPER
CLF	CURRENT LIMITING FUSE	MDF	MAIN DISTRIBUTION FRAME	SECONDARY	600 VOLTS AND LESS
CT	CURRENT TRANSFORMER	MOCP	MAXIMUM OVERCURRENT PROTECTION	SMACNA	SHEET METAL AND AIR COND. CONTRACTOR'S NAT'L ASSOC.
(D)	EXISTING DEVICE TO BE DEMOLISHED	MCB	MAIN CIRCUIT BREAKER		
DAS	DISTRIBUTED ANTENNA SYSTEM	MLO	MAIN LUGS ONLY	SQ.	SQUARE
DIA	DIAMETER	M.C.	MECHANICAL CONTRACTOR	SSBJ	SUPPLY SIDE BONDING JUMPER
DISC	DISCONNECT	M	METER	SBJ	SYSTEM BONDING JUMPER
DIST	DISTRIBUTION	M/M	METER MAIN	TC	TIMECLOCK
D.P.C.S.	DIMMING PANEL CONTROL STATION	MV	MERCURY VAPOR	TEL/DATA	TELEPHONE AND DATA
E.C.	ELECTRICAL CONTRACTOR	MH	METAL HALIDE	TV	TELEVISION
EMS	ENERGY MANAGEMENT CONTROL SYSTEM	MIN.	MINIMUM	T.V.S.S.	TRANSIENT VOLTAGE SURGE SUPPRESSION
EMT	ELECTRICAL METALLIC TUBING	MCA	MINIMUM CIRCUIT AMPS		
ENT	ELECTRICAL NON-METALLIC TUBING	MCC	MOTOR CONTROL CENTER	TYP	TYPICAL
EWC	ELECTRIC WATER COOLER	MCM	THOUSAND CIRCULAR MILS	U.G.P.S.	UNDERGROUND PULL SECTION
E.P.O.	EMERGENCY POWER OFF	MCP	MOTOR CIRCUIT PROTECTOR	U.O.N.	UNLESS OTHERWISE NOTED
E-O-L	END-OF-LINE CIRCUIT TERMINATOR	MFR.	MANUFACTURER	U.P.S., or UPS	UNINTERRUPTABLE POWER SYSTEM
EF	EXHAUST FAN	MTD	MOUNTED	VAV	VARIABLE AIR VOLUME
EGC or EG or E/G	EQUIPMENT GROUND (GREEN)	MW	MICROWAVE	V	VOLTS
(E)	EXISTING DEVICE TO REMAIN	NATS	NON AUTOMATIC DISCONNECT	VA	VOLT AMPERES
EP	EXPLOSION PROOF	NEC	NATIONAL ELECTRICAL CODE	VD	VOLTAGE DROP
(ER)	EXISTING DEVICE TO BE RELOCATED	NEMA	NATIONAL ELECTRICAL MANUFACTURER'S ASSOCIATION	WP	WEATHERPROOF
FT or '	FEET			W	WIRE
FA or F.A.	FIRE ALARM	NC	NORMALLY CLOSED	XFMR	TRANSFORMER
FLA	FULL LOAD AMPS				
GRD	GROUND				

FIRE ALARM SYSTEM SYMBOLS

SEE FIRE ALARM OR CENTRAL MONITORING SYSTEM DRAWINGS FOR FIRE ALARM SYMBOLS.

SIGNAL SYSTEM SYMBOLS

- B — WALL MOUNTED CLOCK. FIELD VERIFY MOUNTING HEIGHT PRIOR TO INSTALLATION. "B" INDICATES BATTERY OPERATED CLOCK. "D" INDICATES DIGITAL CLOCK, "NO LETTER" INDICATES ANALOG CLOCK. REFER TO SPECIFICATIONS.
- —— C —— CONCEALED CLOCK CONDUIT RUN 1/2" CONDUIT, OR AS NOTED, WITH CONDUCTORS PER SPECIFICATIONS.
- HTV — TV OUTLET, WALL MOUNTED. STUB A 3/4" C.O. UP 6" ABOVE THE ACCESSIBLE CEILING AND PROVIDE BUSHING.
- TV — TV OUTLET FLUSH CEILING MOUNTED.
- —— TV —— CONCEALED TELEVISION CONDUIT RUN, 3/4" CONDUIT, OR AS NOTED, WITH CONDUCTORS. REFER TO SPECIFICATIONS.
- HM — MICROPHONE OUTLET, WALL MOUNTED. PROVIDE 3/4" C.O. (WITH PULL ROPE) UP TO 6" ABOVE ACCESSIBLE CEILING SPACE. PROVIDE BUSHING AT EACH END.
- M — MICROPHONE OUTLET, FLUSH CEILING MOUNTED.
- —— M —— CONCEALED MICROPHONE CONDUIT RUN, 3/4" CONDUIT, OR AS NOTED, WITH CONDUCTORS. REFER TO SPECIFICATIONS.
- HS V — SURFACE WALL MOUNTED SPEAKER. "V" INDICATES VOLUME CONTROL.
- S V — SURFACE MOUNTED SPEAKER. "V" INDICATES VOLUME CONTROL.
- HS V — FLUSH WALL MOUNTED SPEAKER. "V" INDICATES VOLUME CONTROL.
- S V — CEILING FLUSH MOUNTED SPEAKER. "V" INDICATES VOLUME CONTROL.
- SM V — ABOVE CEILING MOUNTED SPEAKER. "V" INDICATES VOLUME CONTROL.
- HV — VOLUME CONTROL, WALL MOUNTED.
- —— S —— CONCEALED SPEAKER CONDUIT RUN 3/4" CONDUIT, OR AS NOTED, WITH CONDUCTORS. REFER TO SPECIFICATIONS.

SECURITY ALARM SYSTEM SYMBOLS

- SACP — SECURITY ALARM CONTROL PANEL. SEE SPECIFICATIONS.
- SPS — SECURITY SYSTEM POWER SUPPLY. SEE SPECIFICATIONS.
- DT — SECURITY ALARM DUAL TECHNOLOGY MOTION SENSOR. SEE SPECIFICATIONS.
- DC — SECURITY ALARM DOOR CONTACT. SEE SPECIFICATIONS.
- KP — SECURITY ALARM KEY PAD. SEE SPECIFICATIONS.
- KP — INTRUSION ALARM KEY PAD, SEE SPECIFICATIONS.
- —— SA —— SECURITY ALARM SYSTEM BRANCH CIRCUIT PER SECURITY ALARM RISER DIAGRAM AND/OR SPECIFICATIONS.

ACCESS CONTROL SYSTEM SYMBOLS

- ACCP — ACCESS CONTROL PANEL. SEE SPECIFICATIONS.
- APS — ACCESS CONTROL SYSTEM POWER SUPPLY. SEE SPECIFICATIONS.
- LPS — ACCESS CONTROL SYSTEM LOCK POWER SUPPLY. SEE SPECIFICATIONS.
- CR — ACCESS CONTROL CARD READER. SEE SPECIFICATIONS.
- —— AC —— ACCESS CONTROL SYSTEM BRANCH CIRCUIT PER ACCESS CONTROL RISER DIAGRAM AND/OR SPECIFICATIONS.

ANNOTATIONS

- A — PANEL CALLOUT, "A" INDICATES PANELBOARD OR EQUIPMENT DESIGNATION.
- AC / 2 — MECHANICAL EQUIPMENT CALLOUT, "AC" INDICATES UNIT TYPE AND "2" INDICATES UNIT NUMBER. REFER TO MECHANICAL DRAWINGS FOR EXACT LOCATION AND ELECTRICAL REQUIREMENTS.
- 3 / E-1 — DETAIL CALLOUT, "3" INDICATES DETAIL NUMBER "E-1" INDICATES SHEET NUMBER.
- 2 — PLAN NOTE REFERENCE, REFER TO NOTES ON SHEET, OR AS DIRECTED.
- 4 — REVISION REFERENCE.
- WYE CONFIGURATION — DELTA CONFIGURATION — GROUND

CCTV SYSTEM SYMBOLS

- CCVMS — VIDEO MANAGEMENT SYSTEM, CCTV HEADEND. SEE SPECIFICATIONS.
- CCWS — CCTV WORKSTATION AND MONITOR. SEE SPECIFICATIONS.
- CCTV FIXED POSITION CAMERA. SEE SPECIFICATIONS.
- CCTV PAN/TILT CAMERA. SEE SPECIFICATIONS.
- —— CC —— CCTV SYSTEM BRANCH CIRCUIT PER CCTV SYSTEM RISER DIAGRAM AND/OR SPECIFICATIONS.

TELEPHONE/DATA SYMBOLS

- TELEPHONE OUTLET BOX, WALL MOUNTED. STUB A 1"C.O. UP 6" ABOVE THE ACCESSIBLE CEILING AND PROVIDE A BUSHING. 4S/DP MINIMUM WITH SINGLE GANG RING.
- DATA OUTLET BOX, WALL MOUNTED. STUB A 1"C.O. UP 6-INCHES ABOVE THE ACCESSIBLE CEILING AND PROVIDE A BUSHING. 4S/DP MINIMUM WITH SINGLE GANG RING.
- COMBINATION TELEPHONE AND DATA OUTLET BOX, WALL MOUNTED. STUB A 1"C.O. UP 6-INCHES ABOVE THE ACCESSIBLE CEILING AND PROVIDE A BUSHING. 4S/DP MINIMUM WITH SINGLE GANG RING.
- TELEPHONE OUTLET BOX, FLUSH MOUNTED IN CEILING. MOUNT FLUSH IN FLOOR WHEN INDICATED IN A FLOOR BOX SYMBOL.
- DATA OUTLET BOX FLUSH MOUNTED IN CEILING. MOUNT FLUSH IN FLOOR WHEN INDICATED IN A FLOOR BOX SYMBOL.
- COMBINATION TELEPHONE AND DATA OUTLET BOX FLUSH MOUNTED IN CEILING. MOUNT FLUSH IN FLOOR WHEN INDICATED IN A FLOOR BOX SYMBOL.
- TELEPHONE OUTLET BOX, WALL MOUNTED 6-INCHES ABOVE COUNTER OR SPLASH. STUB A 1"C.O. UP 6-INCHES ABOVE THE ACCESSIBLE CEILING AND PROVIDE A BUSHING. 4S/DP MINIMUM WITH SINGLE GANG RING.
- DATA OUTLET BOX, WALL MOUNTED 6-INCHES ABOVE COUNTER OR SPLASH. STUB A 1"C.O. UP 6-INCHES ABOVE THE ACCESSIBLE CEILING AND PROVIDE A BUSHING. 4S/DP MINIMUM WITH SINGLE GANG RING.
- COMBINATION TELEPHONE AND DATA OUTLET BOX, WALL MOUNTED 6-INCHES ABOVE COUNTER OR SPLASH. STUB A 1"C.O. UP 6-INCHES ABOVE THE ACCESSIBLE CEILING AND PROVIDE A BUSHING. 4S/DP MINIMUM WITH SINGLE GANG RING.
- COMBINATION TELEPHONE AND DATA OUTLET BOX MOUNTED IN ACCESSIBLE CEILING SPACE OR IN FLOOR BOX PER PLAN FOR FLEXIBLE CONNECTION TO FURNITURE SYSTEM. VERIFY CONNECTION REQUIREMENTS WITH MANUFACTURER PRIOR TO ROUGH-IN. MOUNT FLUSH IN FLOOR WHEN INDICATED IN A FLOOR BOX SYMBOL.
- COMBINATION TELEPHONE AND DATA OUTLET, WALL MOUNTED AT +18-INCHES A.F.F. FOR FLEXIBLE CONNECTION TO FURNITURE SYSTEM. PROVIDE THE FOLLOWING:
  - IN A NON-RATED INSULATED WALL, OR NON-RATED UNINSULATED WALL, PROVIDE A 2-GANG MUD RING OR CADDY #RBS SERIES BOX MOUNTING BRACKET (EQUAL BY B-LINE OR RAYCO) WITH (2) 1-1/2"C.O. WITH PULL STRING TO ACCESSIBLE CEILING. PROVIDE 1-1/2" BUSHINGS AT CONDUIT ENDS. REFER TO ARCHITECTURAL PLANS FOR WALL CONSTRUCTION/TYPE AND CEILING CONDITIONS.
  - IN A RATED WALL, PROVIDE (1) 4S/DP BOX WITH (2) 1-1/4"C.O. AND (1) 4S/DP BOX WITH (1) 1-1/4"C.O. WITH PULL STRINGS IN EACH CONDUIT TO ACCESSIBLE CEILING. PROVIDE 1-1/4" BUSHINGS AT CONDUIT ENDS. UTILIZE CADDY #RBS SERIES BOX MOUNTING BRACKET TO MAINTAIN BOX ALIGNMENT (EQUAL BY B-LINE OR RAYCO). UTILIZE FIRESTOPPING SYSTEM PADS RATED FOR USE ON THE INSIDE OR OUTSIDE OF THE BOX (STI OR EQUAL) AS REQUIRED TO MAINTAIN RATING OF WALL OR MEMBRANE. REFER TO ARCHITECTURAL PLANS FOR WALL CONSTRUCTION/TYPE AND CEILING CONDITIONS.
- —— T1 —— CONCEALED TELEPHONE/DATA CONDUIT RUN, 1-INCH CONDUIT ONLY (MIN). SEE TABLE FOR CONDUIT SIZE VARIATIONS.
  T2 = 1-1/4"C.O. T3 = 1-1/2"C.O. T4 = 2"C.O.
- FLUSH MOUNTED, LOCKABLE TERMINAL CABINET WITH TERMINAL STRIPS AS REQUIRED.
- SURFACE MOUNTED, LOCKABLE TERMINAL CABINET WITH TERMINAL STRIPS AS REQUIRED.
- TELEPHONE TERMINAL BACKBOARD SIZED AS NOTED. REFER TO SYSTEM GROUND DETAIL.

LIGHTING SYMBOLS

SITE LIGHTING FIXTURE SYMBOLS DEPICTED WITH CAPITAL LETTER(S) ADJACENT TO RESPECTIVE SYMBOL(S) INDICATE(S) LIGHT FIXTURE MOUNTING BASE DETAIL(S). SEE LIGHTING FIXTURE SCHEDULE FOR FIXTURE SYMBOL INFORMATION.

- 1a — LIGHTING FIXTURE CALL OUT, NUMBER(S) AND/OR UPPER CASE LETTER(S) (i.e. "1") INDICATES FIXTURE TYPE (REFER TO LIGHTING FIXTURE SCHEDULE). LOWER CASE LETTER (i.e. "a") ADJACENT TO FIXTURE TYPE INDICATES BALLAST OPTION (SEE GENERAL LIGHTING FIXTURE SCHEDULE NOTES).
- 1 — INDICATES FINAL CONNECTION TO A LIGHTING FIXTURE, NUMBER OF CONDUCTORS AS REQUIRED.

LIGHTING CONTROL SYMBOLS

SEE THE DISTRIBUTED LIGHTING CONTROL (DLCS) SPECIFICATIONS AND SEQUENCE OF OPERATIONS (SOO) FOR MORE INFORMATION.

- —·—·—·— LOW VOLTAGE WIRING INTERCONNECTING DLCS COMPONENTS AS REQUIRED. SEE DLCS SPECIFICATIONS FOR MORE INFORMATION.
- $H\bigcirc_y$ WALL MOUNTED STAND ALONE OCCUPANCY SENSOR.
- $H\bigcirc_y^H$ WALL MOUNTED SYSTEM-BASED OCCUPANCY SENSOR.
- $\bigcirc_y^{H,AV,DM,P}$ 1-WAY DIRECTIONAL CEILING MOUNTED, SYSTEM-BASED OCCUPANCY SENSOR.
- $\bigcirc_y^{H,AV,DM,P}$ 2-WAY DIRECTIONAL CEILING MOUNTED, SYSTEM-BASED OCCUPANCY SENSOR.
- $H\bigcirc_y^{K,V}$ LOW VOLTAGE MOMENTARY SWITCHES, WALL MOUNTED, FOR MANUAL ON/OFF SWITCHING, DIMMING, AND OVERRIDE CONTROL OF LIGHTING.

LIGHTING CONTROL SYMBOL SUPERSCRIPT & SUBSCRIPT KEY:

1. "y" INDICATES THAT SWITCH LEG "y" TO BE CONFIGURED PER THE SOO. ADJACENT LOWER CASE LETTERS INDICATES QUANTITY OF SWITCHLEGS TO BE CONTROLLED. EXACT CONTROL FUNCTION IS DETERMINED BY THE BALLAST/DRIVER/FIXTURE TYPE.
2. ADJACENT UPPER CASE LETTER(S) INDICATE THE FOLLOWING:

   AV INDICATES CONNECTION TO A/V CONTROL SYSTEM.
   DM INDICATES DUAL MODE CONTROL AT CORRIDORS, STAIRWELLS AND WAREHOUSE AISLEWAYS
   H INDICATES CONNECTION TO HVAC SYSTEM CONTROLS VIA CONTROLLED DRY-CONTACT CLOSURE.
   K INDICATES LOCKING SWITCH FOR THE SUBSEQUENT LOWER CASE LETTER.
   P INDICATES CONNECTION TO MOVEABLE PARTITION INTERFACE, SENSOR AND STATUS INDICATOR.
   V INDICATES VANDAL RESISTANT SWITCH.
3. ADJACENT LOWER CASE LETTER(S) INDICATE SWITCH LEG(S) CONTROLLED EXCEPT WHERE "DM" INDICATES DUAL MODE CONTROL SWITCH.
4. ADJACENT "+, ++ AND +" INDICATES PORTION OF SWITCHLEG CONTROLLED BY SENSOR WHERE "+" INDICATES PRIMARY SIDELIT DAYLIT ZONE, "++" INDICATES SECONDARY SIDELIT DAYLIT ZONE, AND "+" INDICATES SKYLIT DAYLIT ZONE.

BRANCH CIRCUIT SYMBOLS

- A-1,3,5 (///) — HOME RUN TO PANEL. LETTER DESIGNATES PANEL, NUMBERS INDICATE CIRCUITS. HASH MARKS INDICATE NUMBER OF CONDUCTORS IN CONDUIT RUN, #12 AWG MINIMUM UNLESS OTHERWISE NOTED.
- A-1&3&5 (////) — HOME RUN TO PANEL. LETTER DESIGNATES PANEL, NUMBERS INDICATE CIRCUITS WITH SEPARATE NEUTRALS. "&" INDICATES SEPARATE NEUTRALS.
- A-1+3+5 (////) — HOME RUN TO PANEL. LETTER DESIGNATES PANEL, NUMBERS INDICATE CIRCUITS. "+" INDICATES SEPARATE #10 NEUTRAL THROUGHOUT BRANCH CIRCUIT. HASH MARK "/" INDICATES AN ISOLATED GROUND CONDUCTOR.
- CONCEALED CONDUIT OR BRANCH CIRCUIT UNLESS OTHERWISE NOTED. 3/4" CONDUIT MINIMUM, (2) #12 AWG CONDUCTORS MINIMUM.
- CONDUIT OR BRANCH CIRCUIT CONCEALED BELOW GRADE, 3/4" CONDUIT MINIMUM WITH (2) #12 AWG CONDUCTORS MINIMUM AND A CODE SIZED EQUIPMENT GROUND.
- SURFACE-MOUNTED CONDUIT OR BRANCH CIRCUIT UNLESS OTHERWISE NOTED. 1/2" CONDUIT MINIMUM, (2) #12 AWG CONDUCTORS MINIMUM.
- TANDEM WIRING CONNECTION.
- CONDUIT STUB OUT, CAP, MARK AND RECORD ON AS-BUILT DRAWINGS.
- CONDUIT CONTINUATION.
- FLEXIBLE CONNECTION AS REQUIRED. NUMBER OF CONDUCTORS AS REQUIRED. VERIFY CONNECTION REQUIREMENTS WITH MANUFACTURER PRIOR TO ROUGH-IN.
- CONDUIT / BRANCH CIRCUIT / FEEDER CONTINUATION DOWN WALL TO FLOOR BELOW.
- CONDUIT / BRANCH CIRCUIT / FEEDER CONTINUATION UP WALL TO FLOOR ABOVE.

FLOOR BOX / SPECIALTY WALL BOX / PEDESTAL BOX SYMBOLS

- HMV — RECESSED, ADJUSTABLE DEPTH, FLAT PANEL TV/DISPLAY WALL BOX WITH FLUSH GROMMETED COVER PAEL (CHIEF #PAC525F) AND MINIMUM OF (1) 1-1/4"C.O. FROM TOP-MOUNTED L.V. CONDUIT ENTRY BOX TO ACCESSIBLE CEILING. SEE PLANS FOR ANY ADDITIONAL CONDUIT REQUIREMENTS. PROVIDE ADDITIONAL L.V. AND LINE VOLTAGE CONDUIT ENTRY BOXES AS REQUIRED TO ACCOMPLISH WALL BOX CONFIGURATION DEPICTED ON PLANS. FLUSH GROMMETED COVER SHALL BE WHITE, BLACK OR CUSTOM COLOR PER ARCHITECT. WHEN FIELD CONDITIONS PROHIBIT INSTALLATION OF THIS DEVICE (SUCH AS WALL STUD/CAVITY DEPTH OF LESS THAN 2.5" ETC), CONFIRM VIA WRITTEN RFI THE INSTALLATION OF A TRADITIONAL POWER AND DATA RECEPTACLE INSTALLATION ALONG SIDE CCTV/AV JUNCTION BOX CONSISTING OF 2-GANG DEEP JUNCTION BOX/2-GANG RING WITH 1-1/4"C.O. TO ACCESSIBLE CEILING IN ADDITION TO ANY OTHER CONDUIT REQUIREMENTS DEPICTED ON PLANS. REFER TO ARCHITECTURAL PLANS AND ELEVATIONS FOR MOUNTING HEIGHT.
- SINGLE OR DUAL SERVICE RECESSED EXTERIOR WALL BOX, TYPE "WP-A". PROVIDE DEVICES PER PLAN. EACH LV OR UNUSED COMPARTMENT SHALL BE EQUIPPED WITH A 1"C.O. TO THE NEAREST ACCESSIBLE CEILING SPACE U.O.N. SEE EXTERIOR DETAILS AND SPECIFICATIONS FOR MORE INFORMATION.
- SINGLE OR DUAL SERVICE EXTERIOR PEDESTAL, TYPE "WP-C". PROVIDE DEVICES PER PLAN. SEE EXTERIOR DETAILS AND SPECIFICATIONS FOR MORE INFORMATION. ARROW DENOTES DEVICE DOOR LOCATION.

MEP EQUIPMENT ANCHORAGE NOTE:

ALL MECHANICAL, ELECTRICAL AND PLUMBING COMPONENTS SHALL BE ANCHORED AND INSTALLED PER THE DETAILS ON THE DSA APPROVED CONSTRUCTION DOCUMENTS. THE FOLLOWING COMPONENTS SHALL BE ANCHORED OR BRACED TO MEET THE FORCE AND DISPLACEMENT REQUIREMENTS PRESCRIBED IN THE 2019 CBC, SECTIONS 1617A.1.18 THROUGH 1617A.1.26 AND ASCE 7-16, CHAPTERS 13, 26 AND 30.

A. ALL PERMANENT EQUIPMENT AND COMPONENTS.

B. TEMPORARY OR MOVABLE EQUIPMENT THAT IS PERMANENTLY ATTACHED (EG. HARD WIRED) TO THE BUILDING UTILITY SERVICES SUCH AS ELECTRICITY, GAS OR WATER. "PERMANENTLY ATTACHED" SHALL INCLUDE ALL ELECTRICAL CONNECTIONS EXCEPT PLUGS FOR 110/220V RECEPTACLES HAVING A FLEXIBLE CABLE.

C. TEMPORARY, MOVABLE OR MOBILE EQUIPMENT WHICH IS HEAVIER THAN 400 POUNDS OR HAS A CENTER OF MASS LOCATED 4 FEET OR MORE ABOVE THE ADJACENT FLOOR OR ROOF LEVEL THAT DIRECTLY SUPPORT THE COMPONENT IS REQUIRED TO BE RESTRAINED IN A MANNER APPROVED BY THE DSA.

THE FOLLOWING MECHANICAL AND ELECTRICAL COMPONENTS SHALL BE POSITIVELY ATTACHED TO THE STRUCTURE BUT NEED NOT DEMONSTRATE DESIGN COMPLIANCE WITH THE REFERENCES NOTED ABOVE. THESE COMPONENTS SHALL HAVE FLEXIBLE CONNECTIONS PROVIDED BETWEEN THE COMPONENT AND ASSOCIATED DUCTWORK, PIPING, AND CONDUIT. FLEXIBLE CONNECTIONS MUST ALLOW MOVEMENT IN BOTH TRANSVERSE AND LONGITUDINAL DIRECTIONS:

A. COMPONENTS WEIGHING LESS THAN 400 POUNDS AND HAVING A CENTER OF MASS LOCATED 4 FEET OR LESS ABOVE THE ADJACENT FLOOR OR ROOF LEVEL THAT DIRECTLY SUPPORT THE COMPONENT.

B. COMPONENTS WEIGHING LESS THAN 20 POUNDS, OR IN THE CASE OF DISTRIBUTED SYSTEMS, LESS THAN 5 POUNDS PER FOOT, WHICH ARE SUSPENDED FROM A ROOF OR FLOOR OR HUNG FROM A WALL.

THE ANCHORAGE OF ALL MECHANICAL, ELECTRICAL AND PLUMBING COMPONENTS SHALL BE SUBJECT TO THE APPROVAL OF THE DESIGN PROFESSIONAL IN GENERAL RESPONSIBLE CHARGE OR STRUCTURAL ENGINEER DELEGATED RESPONSIBILITY AND ACCEPTANCE BY DSA. THE PROJECT INSPECTOR WILL VERIFY THAT ALL COMPONENTS AND EQUIPMENT HAVE BEEN ANCHORED IN ACCORDANCE WITH THE ABOVE REQUIREMENTS.

PIPING, DUCTWORK AND ELECTRICAL DISTRIBUTION SYSTEM BRACING NOTE:

PIPING, DUCTWORK AND ELECTRICAL DISTRIBUTION SYSTEMS SHALL BE BRACED TO COMPLY WITH THE FORCES AND DISPLACEMENTS PRESCRIBED IN ASCE 7-16 SECTION 13.3 AS DEFINED IN ASCE 7-16 SECTION 13.6.5, 13.6.6, 13.6.7, 13.6.8; AND 2019 CBC, SECTIONS 1617A.1.24, 1617A.1.25 AND 1616A.1.26.

THE METHOD OF SHOWING BRACING AND ATTACHMENTS TO THE STRUCTURE FOR THE IDENTIFIED DISTRIBUTION SYSTEM ARE AS NOTED BELOW. WHEN BRACING AND ATTACHMENTS ARE BASED ON A PREAPPROVED INSTALLATION GUIDE (E.G. OSHPD OPM FOR 2013 CBC OR LATER), COPIES OF THE BRACING SYSTEM INSTALLATION GUIDE OR MANUAL SHALL BE AVAILABLE ON THE JOBSITE PRIOR TO THE START OF AND DURING THE HANGING AND BRACING OF THE DISTRIBUTION SYSTEMS. THE STRUCTURAL ENGINEER OF RECORD SHALL VERIFY THE ADEQUACY OF THE STRUCTURE TO SUPPORT THE HANGER AND BRACE LOADS.

MECHANICAL PIPING (MP), MECHANICAL DUCTS (MD), PLUMBING PIPING (PP), ELECTRICAL DISTRIBUTION SYSTEMS (E):

- MP☐ MD☐ PP☐ E☒ — OPTION 1: DETAILED ON THE APPROVED DRAWINGS WITH PROJECT SPECIFIC NOTES AND DETAILS.
- MP☐ MD☐ PP☐ E☐ — OPTION 2: SHALL COMPLY WITH THE APPLICABLE OSHPD PRE-APPROVAL (OPM#) #0052-13 & #0043-13.

POWER SYMBOLS

- DUPLEX RECEPTACLE, WALL MOUNTED.
- DOUBLE DUPLEX RECEPTACLE, WALL MOUNTED.
- DUPLEX, GFCI RECEPTACLE, WALL MOUNTED. WP INDICATES WEATHERPROOF, A, B OR C INDICATES THE TYPE OF COVER, REFER TO THE GENERAL PRODUCT SPECIFICATIONS.
- DOUBLE DUPLEX, WALL MOUNTED, WITH (1) GFCI RECEPTACLE AND (1) DUPLEX RECEPTACLE CONNECTED ON LOAD SIDE OF GFCI. WP INDICATES WEATHERPROOF, A, B OR C INDICATES THE TYPE OF COVER, REFER TO THE GENERAL PRODUCT SPECIFICATIONS.
- DUPLEX RECEPTACLE, ONE HALF SWITCHED, WALL MOUNTED.
- DUPLEX, ISOLATED GROUND RECEPTACLE, WALL MOUNTED.
- 3 — COMBINATION DOUBLE DUPLEX: ONE ISOLATED GROUND DUPLEX RECEPTACLE AND ONE DUPLEX RECEPTACLE, WALL MOUNTED.
- COMBINATION DOUBLE DUPLEX: TWO ISOLATED GROUND RECEPTACLES, WALL MOUNTED.
- SIMPLEX RECEPTACLE, WALL MOUNTED.
- SPECIAL RECEPTACLE, WALL MOUNTED. REFER TO PLAN NOTES.
- DUPLEX RECEPTACLE FLUSH IN CEILING. MOUNT FLUSH IN FLOOR WHEN INDICATED IN A FLOOR BOX SYMBOL.
- DOUBLE DUPLEX RECEPTACLE FLUSH IN CEILING. MOUNT FLUSH IN FLOOR WHEN INDICATED IN A FLOOR BOX SYMBOL.
- DUPLEX RECEPTACLE, ONE HALF SWITCHED, FLUSH IN CEILING. MOUNT FLUSH IN FLOOR WHEN INDICATED IN A FLOOR BOX SYMBOL.
- DUPLEX, ISOLATED GROUND RECEPTACLE, FLUSH IN CEILING. MOUNT FLUSH IN FLOOR WHEN INDICATED IN A FLOOR BOX SYMBOL.
- 3 — COMBINATION DOUBLE DUPLEX: ONE ISOLATED GROUND DUPLEX RECEPTACLE AND ONE DUPLEX RECEPTACLE, MOUNTED FLUSH IN CEILING. MOUNT FLUSH IN FLOOR WHEN INDICATED IN FLOOR BOX SYMBOL.
- COMBINATION DOUBLE DUPLEX FLUSH IN CEILING: TWO ISOLATED GROUND RECEPTACLES. MOUNT FLUSH IN FLOOR WHEN INDICATED IN FLOOR BOX SYMBOL.
- SIMPLEX RECEPTACLE FLUSH IN CEILING. MOUNT FLUSH IN FLOOR WHEN INDICATED IN A FLOOR BOX SYMBOL.
- SPECIAL RECEPTACLE FLUSH IN CEILING. MOUNT FLUSH IN FLOOR WHEN INDICATED IN A FLOOR BOX SYMBOL.
- DUPLEX RECEPTACLE, WALL MOUNTED AT 6-INCHES ABOVE COUNTER OR SPLASH.
- DOUBLE DUPLEX RECEPTACLE, WALL MOUNTED AT 6-INCHES ABOVE COUNTER OR SPLASH.
- DUPLEX, GFCI RECEPTACLE, WALL MOUNTED AT 6-INCHES ABOVE COUNTER OR SPLASH. WP INDICATES WEATHERPROOF, A, B OR C INDICATES THE TYPE OF COVER, REFER TO THE GENERAL PRODUCT SPECIFICATIONS.
- DOUBLE DUPLEX, WALL MOUNTED 6-INCHES ABOVE COUNTER OR SPLASH, WITH (1) GFCI RECEPTACLE AND (1) DUPLEX RECEPTACLE CONNECTED ON LOAD SIDE OF GFCI. WP INDICATES WEATHERPROOF, A, B OR C INDICATES THE TYPE OF COVER, REFER TO THE GENERAL PRODUCT SPECIFICATIONS.
- DUPLEX RECEPTACLE, BOTTOM HALF SWITCHED, WALL MOUNTED AT 6-INCHES ABOVE COUNTER OR SPLASH.
- DUPLEX, ISOLATED GROUND RECEPTACLE, WALL MOUNTED AT 6-INCHES ABOVE COUNTER OR SPLASH.
- 3 — COMBINATION DOUBLE DUPLEX: ONE ISOLATED GROUND DUPLEX RECEPTACLE AND ONE DUPLEX RECEPTACLE, WALL MOUNTED AT 6-INCHES ABOVE COUNTER OR SPLASH.
- COMBINATION DOUBLE DUPLEX: TWO ISOLATED GROUND DUPLEX RECEPTACLES, WALL MOUNTED AT 6-INCHES ABOVE COUNTER OR SPLASH.
- SIMPLEX RECEPTACLE, WALL MOUNTED AT 6-INCHES ABOVE COUNTER OR SPLASH.
- SPECIAL RECEPTACLE, WALL MOUNTED AT 6-INCHES ABOVE COUNTER OR SPLASH. REFER TO PLAN NOTES.
- WP-B — WET LOCATION-LISTED (RAINTITE-IN-USE) RECEPTACLE. SEE ELECTRICAL SPECIFICATION FOR ADDITIONAL INFORMATION.
- WP-D — DAMP LOCATION-LISTED (NOT-RAINTITE-IN-USE) RECEPTACLE. SEE ELECTRICAL SPECIFICATION FOR ADDITIONAL INFORMATION.
- J — JUNCTION BOX, WALL MOUNTED AT +18-INCHES A.F.F. OR AS NOTED. 4S/DP MINIMUM OR AS REQUIRED BY CEC.
- J — JUNCTION BOX, MOUNTED IN ACCESSIBLE CEILING FOR APPLICATION DENOTED ON PLAN. 4S/DP MINIMUM OR AS REQUIRED BY CEC.
- HJ — JUNCTION BOX, WALL MOUNTED AT 6-INCHES ABOVE COUNTER OR SPLASH. 4S/DP MINIMUM OR AS REQUIRED BY CEC.
- J — JUNCTION BOX, 4S MINIMUM OR AS REQUIRED BY CEC. MOUNT FLUSH IN FLOOR WHEN INDICATED IN A FLOOR BOX SYMBOL.
- FJ — JUNCTION BOX, WALL MOUNTED AT +18-INCHES A.F.F., 4S/DP MINIMUM OR AS REQUIRED BY CEC FOR FLEXI

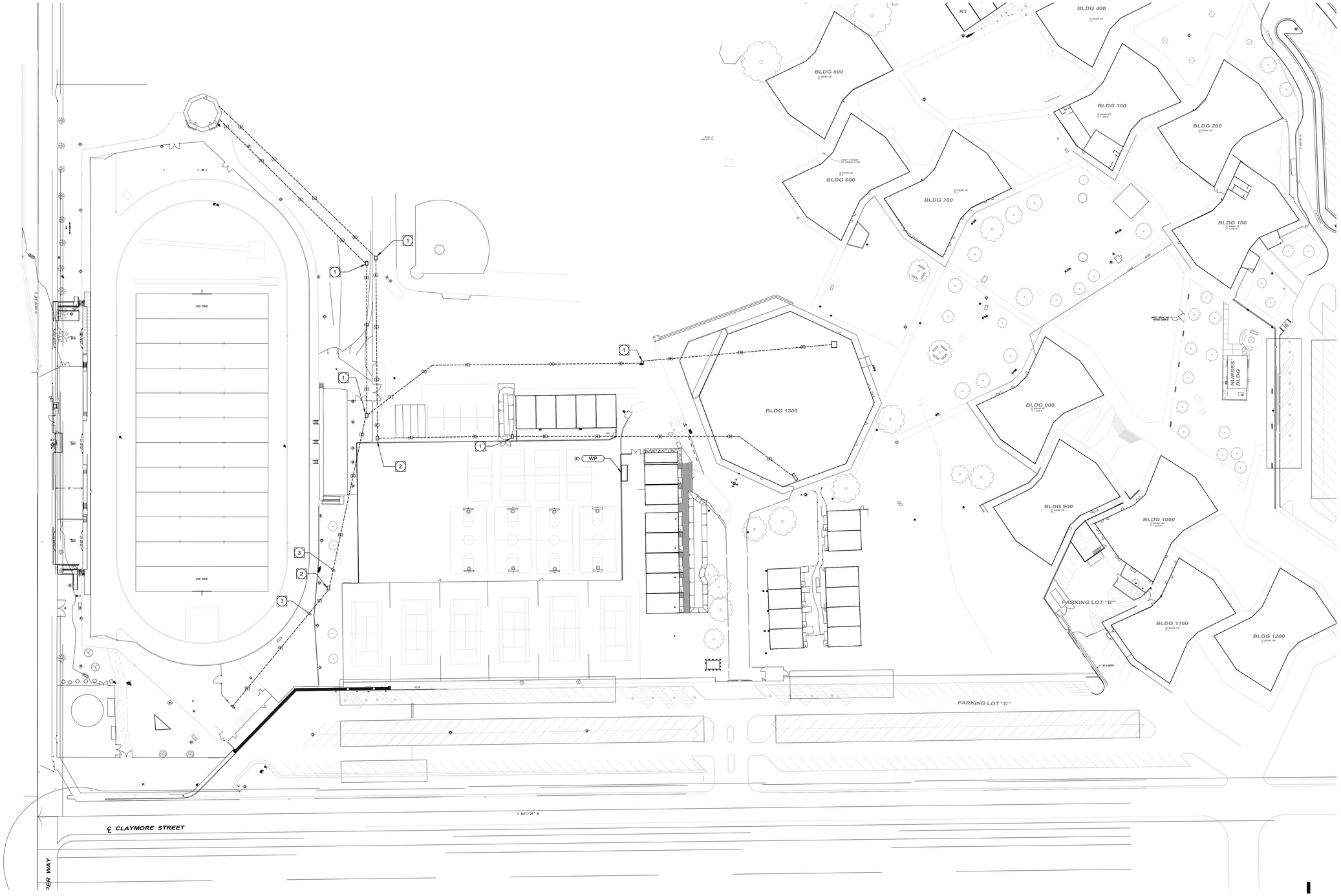

DEMOLITION SITE PLAN OVERALL

1/60" = 1'-0"

GENERAL DEMOLITION NOTES:

1. THE ELECTRICAL DRAWINGS ARE DIAGRAMMATIC ONLY. DO NOT SCALE THE ELECTRICAL DRAWINGS TO DETERMINE THE LOCATION OF EQUIPMENT OR OUTLETS. SEE ARCHITECTURAL PLANS, WHERE PROVIDED ON PROJECT, FOR EXTENT OF DEMOLITION.
2. THE EXISTING CONDITIONS SHOWN ARE FROM AVAILABLE RECORD DRAWINGS AND SHOWN FOR REFERENCE ONLY. CONTRACTOR SHALL VERIFY ACTUAL EXISTING CONDITIONS AT SITE PRIOR TO SUBMITTING BID. ALL DEMOLITION, ALTERATION, EXTENSION, RELOCATION, REHABILITATION WORK SHALL BE INCLUDED IN CONTRACT. NO ADDITIONAL ALLOWANCE OR CHANGE ORDERS WILL BE ACCEPTED.
3. CONTRACTOR IS RESPONSIBLE TO RELOCATE OR REMOVE FROM WALLS, CEILINGS, FLOOR SPACES, ETC. ANY EXISTING CONDUITS, WIRES, BOXES, FITTINGS, FIXTURES OR OTHER ELECTRICAL EQUIPMENT WHICH INTERFERES WITH PLANNED REMODEL WORK. PROVIDE CIRCUIT CONTINUATION REQUIRED FOR ALL EXISTING OUTLETS, FIXTURES, EQUIPMENT, ETC. SCHEDULED TO REMAIN.
4. NOTIFY THE ENGINEER IMMEDIATELY WHEREVER EXISTING EQUIPMENT IS ENCOUNTERED WHICH MUST BE RELOCATED DUE TO THE NEW CONSTRUCTION, OR NOT INDICATED ON "AS-BUILT" DRAWINGS OR WAS BURIED UNDERGROUND OR EMBEDDED IN STRUCTURE WALLS.
5. CAREFULLY PROTECT ALL WALLS, TRIM, FLOORS, EQUIPMENT, UTILITY LINES AND MATERIALS. WHEN WORKING ON FINISHED SURFACES, LIMIT DAMAGE TO THE SMALLER AREA IF POSSIBLE AND RESTORE TO THE ORIGINAL CONDITION ALL SURFACES WHICH ARE DAMAGED BECAUSE OF THE INSTALLATION OF THIS WORK.
6. EQUIPMENT, MATERIALS AND SUPPLIES TEMPORARILY REMOVED FOR PROTECTION SHALL BE REPLACED IN ORIGINAL LOCATIONS. ANY MATERIALS DAMAGED SHALL BE REPLACED WITH NEW MATERIALS OF LIKE KIND AND QUALITY.
7. DEMOLITION WORK SHALL BE DONE IN A MANNER WHICH WILL NOT CAUSE UNNECESSARY INCONVENIENCE OR DANGER TO USERS OF THE PREMISES AND ADJACENT SITE, AND NOT INTERFERE WITH ITS OPERATION. ANY DEMOLITION WORK TO BE PERFORMED MUST BE PLANNED IN ADVANCE.
8. DO ALL DRILLING, CUTTING, ETC. REQUIRED TO DEMOLISH ELECTRICAL WORK AS INDICATED OR PROVIDE BLANK COVER PLATE ON ALL OUTLETS EXPOSED BY REMOVAL OF FIXTURE OR DEVICES.
9. RESEAL ALL PENETRATIONS OR OPENING THROUGH WALLS, CEILING, FLOORS, ETC., TO MAINTAIN THE RATING OF STRUCTURE.
10. ALL REMOVED MATERIALS AND EQUIPMENT WHICH IS SALVAGED MATERIALS SHALL REMAIN IN THE PROPERTY OF THE OWNER. DELIVER SUCH SALVAGED MATERIALS AND EQUIPMENT ON THE PREMISES AS DIRECTED BY OWNER AND NEATLY PILE OR STORE THEM AND PROTECT FROM DAMAGED. DISPOSE OF ALL HAZARDOUS MATERIAL PER GUIDELINE OF THE STATE OF CALIFORNIA, DEPARTMENT OF HEALTH SERVICES AND OTHER AGENCIES HAVING JURISDICTION.
11. CONTRACTOR SHALL FIELD VERIFY EXISTING CONDUIT/WIRING RUNS, REUSE AS REQUIRE AND REMOVED ALL UNUSED CONDUIT/WIRING. UNUSED CONDUIT IN INACCESSIBLE LOCATIONS (WALLS TO REMAIN) CAN BE ABANDONED IN PLACE. REMOVE UNUSED WIRING.
12. CONTRACTOR TO VERIFY CIRCUIT NUMBER AND LOADS FOR ALL EXISTING EQUIPMENT PRIOR TO INSTALLATION OF NEW OR RELOCATED ELECTRICAL EQUIPMENT. REASSIGN CIRCUITS AND LOADS ACCORDINGLY. PROVIDE COMPLETE "AS BUILT" DRAWINGS AND TYPEWRITTEN DIRECTORIES FOR PANELS.
13. WHERE NECESSARY TO SHUT OFF UTILITY SERVICES OR CAUSE INTERRUPTION TO POWER OR SIGNAL SYSTEMS WHILE A BUILDING IS OCCUPIED OR THAT EFFECT ADJACENT BUILDINGS, SCHEDULE OUTAGES OR INTERRUPTIONS WITH THE OWNER, BUILDING OCCUPANTS AND/OR ADJACENT BUILDING OWNER(S) AND OCCUPANTS PRIOR TO CONDUCTING OUTAGE(S) OR INTERRUPTIONS.
14. REFER TO ARCHITECTURAL DEMOLITION DRAWING FOR DEMOLITION AREAS. THE SCOPE OF THE DEMOLITION SHALL INCLUDE ALL LABOR, EXISTING ELECTRICAL EQUIPMENT. VERIFY EXACT SCOPE PRIOR TO COMMENCING WORK. REFER TO DEMO PLAN FOR SPECIFIC AREAS NOT IN SCOPE THE SCOPE INCLUDES, BUT IS NOT LIMITED TO THE FOLLOWING:
    - A. LIGHTING: CONTRACTOR TO DEMOLISH ALL EXISTING LIGHTING FIXTURES AND ASSOCIATED CONTROLS, U.O.N.
    - B. POWER: EXISTING POWER SHALL REMAIN, U.O.N.
    - C. ALL EXISTING ELECTRICAL SWITCHGEAR, PANELBOARDS, PULLBOXES, ETC. SHALL REMAIN, U.O.N.
    - D. SIGNAL: CONTRACTOR TO DEMOLISH ALL EXISTING SIGNAL SYSTEMS (CLOCKS, DATA OUTLETS, TELEPHONE OUTLETS, TELEVISION OUTLETS, SPEAKERS, ETC.)
    - E. FIRE ALARM: CONTRACTOR TO DEMOLISH ALL EXISTING FIRE ALARM DEVICES, U.O.N.
    - F. EXTERIOR LIGHTING: CONTRACTOR SHALL DEMOLISH ALL EXISTING EXTERIOR LIGHTING FIXTURES AND ASSOCIATED CONTROLS, U.O.N.
    - G. EXTERIOR POWER, SIGNAL AND FIRE ALARM: CONTRACTOR SHALL DEMOLISH ALL EXISTING EXTERIOR POWER, SIGNAL AND FIRE ALARM DEVICES, U.O.N.
15. WHERE NEW PARTITIONS OR OTHER CONSTRUCTION WILL COVER EXISTING, REMAINING OUTLETS MAKING THEM INACCESSIBLE, RELOCATE THESE OUTLETS AS REQUIRED, OR MAKE OTHER PROVISIONS SO THAT THE OUTLETS WILL REMAIN ACCESSIBLE AND OPERATIONAL.
16. WHERE EXISTING WALLS AND CEILINGS ARE TO REMAIN, PROVIDE BLANK COVER PLATES FOR OUTLETS WHERE EQUIPMENT OR DEVICES ARE REMOVED UNDER THIS CONTRACT. PRIME BLANK PLATES AND PAINT TO MATCH SURROUNDING AREA.
17. WHERE FIXTURES, EQUIPMENT, DEVICES, ETC. ARE SPECIFIED BY THE CONTRACT DOCUMENTS FOR REMOVAL, THE CONTRACTOR SHALL REMOVE ALL CIRCUIT CONDUCTORS/CABLING BACK TO THE NEAREST REMAINING JUNCTION BOX AND/OR POINT OF TERMINATION.
18. RELOCATE EXISTING CONDUITS AND/OR CONDUCTORS/CABLING ROUTING THROUGH AREAS WHERE NEW/REMOVED WALLS ARE SPECIFIED.
19. RELOCATION AND/OR REMOVAL OF EXISTING EQUIPMENT, DEVICES, OUTLETS BOXES, CONDUIT, WIRING, ETC. MAY AFFECT THE OPERATION OF EXISTING, REMAINING ELECTRICAL EQUIPMENT/DEVICES, THE CONTRACTOR SHALL PROVIDE ADDITIONAL MATERIALS AS REQUIRED TO MAINTAIN AND/OR RESTORE CONTINUITY OF SERVICES TO EXISTING REMAINING ELECTRICAL/DEVICES.
20. DISCONNECT ABANDONED CIRCUITS AT EXISTING PANEL BOARDS AND REMOVE WIRE TO LAST REMAINING DEVICES. LABEL ALL ABANDONED CIRCUIT BREAKERS "SPARE".
21. ALL DEMOLITION SHALL COMPLY WITH CBC CHAPTER 33 CBC AND CFC CHAPTER 33.

PLAN NOTES:

1. EXISTING PULLBOX TO BE PROTECTED IN PLACE.
2. EXISTING PULLBOX IN THE WAY OF PROPOSED NEW CONSTRUCTION. CONTRACTOR SHALL DEMOLISH AND REROUTE CONDUITS TO NEW PULL BOX LOCATION OUTSIDE OF PROPOSED CONSTRUCTION SCOPE. SEE E1.0 FOR PROPOSED NEW LOCATION.
3. EXISTING 1-1/4"C 2#4 CU TO BE SPLICED AND EXTENDED TO NEW PULLBOX LOCATION.
4. EXISTING LOW VOLTAGE CONDUIT DUCTBANK TO NORTH RESTROOM BUILDING. CONDUIT TO BE RE-ROUTED TO NEW PULLBOX LOCATION. ALL CABLES TO BE REPLACED LIKE FOR LIKE FROM TERMINATION POINT TO TERMINATION POINT AND TESTED. SPLICING WILL NOT. FOR LIKE AND TESTED. CONDUIT BANK CONTAINS:
   (1)1"C – 4#10, 4#12, 4#14 (FIRE ALARM)
   (2)1"C SPARE
   (1)1"C – (2) '/' CABLES (TELEPHONE)

IDENTIFICATION STAMP
DIV. OF THE STATE ARCHITECT
APP: 03-122664 INC:
REVIEWED FOR
SS ☑ FLS ☑ ACS ☑
DATE: 05/12/2023

pjhm architects

LICENSED ARCHITECT
RICHARD W. RISBERG
NO. C15585
REN. 02/25
STATE OF CALIFORNIA

tk|sc COLLABORATIVE
11870 Pierce Street, Suite 160
Riverside, California 92505
951.299.4160 www.tk1sc.com
Project Leader - Nikolas Bruno
Electrical Lead - Nikolas Bruno
tk1sc Job #: B2202744.000

REGISTERED PROFESSIONAL ENGINEER
RAYMOND W. SIMPSON
No. E15610
EXP. 12-31-2024
ELECTRICAL
STATE OF CALIFORNIA

HIGHLAND HIGH SCHOOL
50M POOL & AQUATICS CENTER
KERN HIGH SCHOOL DISTRICT

DEMOLITION
SITE PLAN
OVERALL

ED-1.0

OC Office: 24461 Ridge Route Drive #100, Laguna Hills, CA 92653 Phone: 949.496.6135 SD Office: 804 Pier View Way #103, Oceanside, CA 92054 Phone: 760.730.5527 LA Office: 837 Traction Avenue, #410, Los Angeles, CA 90013 Phone: 213.278.0172 Web: pjhm.com

8/2/2022 11:34:37 AM

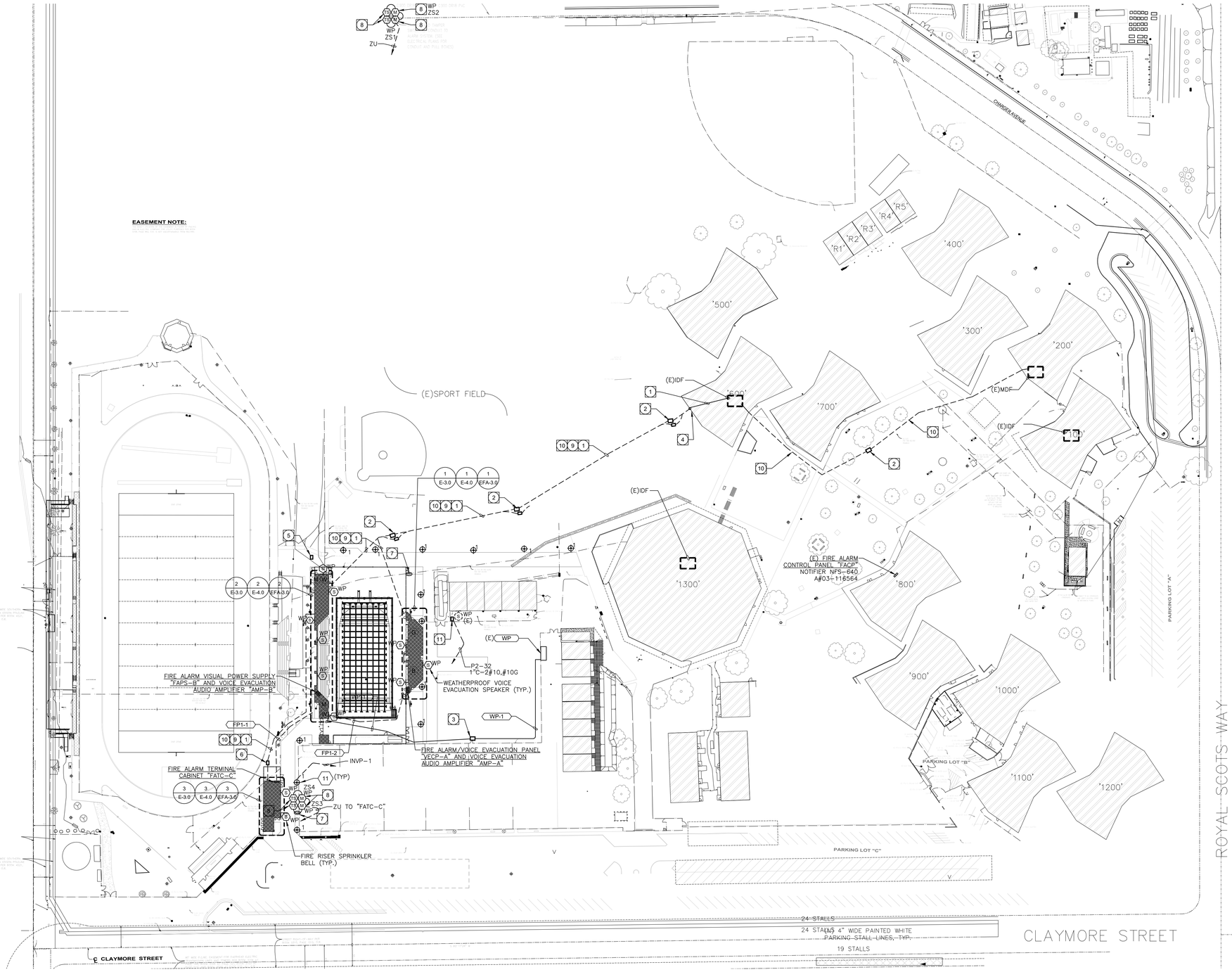

SITE PLAN OVERALL

1/60" = 1'-0"

SITE PLAN GENERAL NOTES:

1. CONTRACTOR SHALL EXERCISE EXTREME CAUTION IN EXCAVATING AND TRENCHING ON THIS SITE TO AVOID EXISTING DUCTS, PIPING OR CONDUITS, ETC., AND TO PREVENT HAZARDS TO PERSONNEL AND/OR DAMAGE TO EXISTING UNDERGROUND UTILITIES OR STRUCTURES WHETHER OR NOT SHOWN AND INSTALLED BY ANY OTHER CONTRACTS. THE ENGINEER IS NOT RESPONSIBLE FOR THE LOCATION OF UNDERGROUND UTILITIES OR STRUCTURES WHETHER OR NOT SHOWN OR DETAILED AND INSTALLED BY ANY OTHER CONTRACTS. THE CONTRACTOR SHALL IMMEDIATELY NOTIFY THE ENGINEER SHOULD SUCH UNIDENTIFIED CONDITIONS BE DISCOVERED. THESE DRAWINGS AND SPECIFICATIONS DO NOT INCLUDE THE NECESSARY ELEMENTS FOR CONSTRUCTION SAFETY.
2. CALL UNDERGROUND SERVICE ALERT (USA) AT 1 (800) 422-4133 OR APPLICABLE STATE AND LOCAL DIG SAFE OR UNDERGROUND ALERT HOTLINES PRIOR TO CONSTRUCTION START.
3. MINIMUM CONDUIT SIZE SHALL BE 3/4" – U.O.N.
4. MINIMUM CONDUCTOR SIZE SHALL BE #10 AWG. – U.O.N.
5. ALL SITE BRANCH CIRCUITS SHALL INCLUDE AN EQUIPMENT GROUND CONDUCTOR THAT, AT MINIMUM, MATCHES THE SIZE OF THE ASSOCIATED BRANCH CIRCUIT CONDUCTOR. WHERE MULTIPLE BRANCH CIRCUITS ARE ROUTED/GROUPED TOGETHER, THE EQUIPMENT GROUNDING CONDUCTOR SHALL MATCH THE SIZE OF THE LARGEST BRANCH CIRCUIT CONDUCTOR IN THE GROUP.
6. ALL ELECTRICAL EQUIPMENT MOUNTED OUTDOORS SHALL BE WEATHERPROOF (NEMA #3R).
7. ALL CONDUIT ONLY SHALL BE PROVIDED WITH A NYLON PULL STRING.
8. SEE ARCHITECTURAL/LANDSCAPE ARCHITECTURAL PLANS FOR EXACT LOCATIONS OF FIXTURES, PULLBOXES, MANHOLES, OTHER ELECTRICAL DEVICES, ETC. COORDINATE ALL UNDERGROUND STRUCTURES AND CONDUIT ROUTING WITH LANDSCAPE ARCHITECT PRIOR TO ROUGH-IN TO ENSURE THAT SUCH ITEMS ARE NOT PLACED IN CRITICAL LANDSCAPE PLANTING/HARDSCAPE AREAS.
9. UNLESS SPECIFICALLY SHOWN AS (E), (R), (ER), (D), EXISTING OR NON-BOLD, ALL ELECTRICAL DEVICES SHOWN ARE NEW.

(1) NOTE:
LIGHT FIXTURE TYPE, TYPICAL.
REFER TO LIGHTING FIXTURE SCHEDULE ON SHEET E-7.0.

PLAN NOTES:

(1) PROVIDE THE FOLLOWING SIGNAL SYSTEM CONDUITS BELOW GRADE WITH SPECIFIED SYSTEM CONDUCTORS, U.O.N.:
- (1)4"C. DATA/VOIP
- (1)3"C. PUBLIC ADDRESS
- (1)3"C. SECURITY
- (2)2"C. SPARE
- (1)2"C. FIRE ALARM-ROUTE TO FA PULL BOXES

(2) FURNISH AND INSTALL NEW 2'x3'xDEPTH AS REQUIRED FLUSH-IN-GRADE PULL BOX WITH TRAFFIC RATED COVER LABELED 'SIGNAL', AND NEW 18"X24"XDEPTH AS REQUIRED FLUSH-IN-GRADE PULL BOX WITH TRAFFIC RATED COVER LABELED 'FIRE'. COORDINATE FINAL LOCATION IN FIELD WITH LANDSCAPE. TERMINATE FIRE ALARM CONDUITS INTO FIRE ALARM PULL BOXES ONLY.

(3) FURNISH AND INSTALL NEW 2'x3'xDEPTH AS REQUIRED FLUSH-IN-GRADE PULL BOX WITH TRAFFIC RATED COVER LABELED 'POWER'. COORDINATE FINAL LOCATION IN FIELD WITH LANDSCAPE.

(4) ROUTE FIRE ALARM CONDUIT TO FIRE ALARM CONTROL PANEL, ROUTE ALL OTHER SIGNAL CONDUITS TO ASSOCIATED SYSTEMS' HEADEND EQUIPMENT.

(5) FURNISH AND INSTALL NEW 2'x3'xDEPTH AS REQUIRED FLUSH-IN-GRADE PULL BOX WITH TRAFFIC RATED COVER LABELED 'POWER'. COORDINATE FINAL LOCATION IN FIELD WITH LANDSCAPE. THIS NEW PULLBOX IS INTENDED TO REPLACE THE EXISTING PULLBOX SHOWN ON ED1.0 SITE DEMOLITION PLAN. REROUTE EXISTING CONDUIT AND WIRES TO PROPOSED NEW LOCATION.

(6) FURNISH AND INSTALL NEW 2'x3'xDEPTH AS REQUIRED FLUSH-IN-GRADE PULL BOX WITH TRAFFIC RATED COVER LABELED 'SIGNAL'. COORDINATE FINAL LOCATION IN FIELD WITH LANDSCAPE. THIS NEW PULLBOX IS INTENDED TO REPLACE THE EXISTING PULLBOX SHOWN ON ED1.0 SITE DEMOLITION PLAN. REROUTE EXISTING CONDUIT AND WIRES TO PROPOSED NEW LOCATION.

(7) ACCESS CONTROL CARD READER WITH 3/4" CONDUIT AND CONDUCTORS ROUTED TO NEAREST ACCESS CONTROL HEAD END. CONTRACTOR SHALL COORDINATE DOOR HARDWARE WITH ARCHITECT PRIOR TO ROUGH IN.

(8) CONNECT ALL REQUIRED FIRE ALARM DEVICES TO FIRE WATER LINE OSY/PIV/DOUBLE BACK CHECK VALVES ETC. TO FIRE ALARM SYSTEM. PROVIDE 3/4"C WITH REQUIRED CONDUCTORS. SEE FIRE ALARM SYSTEM SPECIFICATIONS FOR ADDITIONAL REQUIREMENTS. VERIFY EXACT LOCATIONS WITH CIVIL AND ARCHITECT PRIOR TO TRENCHING OR ROUGH-IN.

(9) 12-STRAND SINGLE MODE FIBER CONNECTION FROM (E) IDF IN BLDG 600 TO (N) IDF CABINET IN POOL BLDG(S).

(10) 25-PAIR COPPER CONNECTION FROM TELCO HEADEND IN (E) MDF IN BLDG 200, PASS-THROUGH (E) IDF IN BLDG 600, TO (N) IDF CABINET IN POOL BLDG(S).

(11) PROVIDE 120V 20A CONNECTION FOR IRRIGATION CONTROLLER. REFERENCE IRRIGATION PLANS FOR EXACT LOCATION. VERIFY CONNECTION REQUIREMENTS WITH MANUFACTURER.

IDENTIFICATION STAMP
DIV. OF THE STATE ARCHITECT
APP: 03-122664 INC:
REVIEWED FOR
SS ☑ FLS ☑ ACS ☑
DATE: 05/12/2023

pjhm architects
LICENSED ARCHITECT
RAYMOND W. SWARTZ
No. C15585
REN. 02/25
STATE OF CALIFORNIA

tk|sc COLLABORATIVE
11870 Pierce Street, Suite 160
Riverside, California 92505
951.299.4160 www.tk1sc.com
Project Leader - Nikolas Bruno
Electrical Lead - Nikolas Bruno
tk1sc Job #: B2202744.000

REGISTERED PROFESSIONAL ENGINEER
RAYMOND W. SWARTZ
No. E15610
EXP. 12-31-2024
ELECTRICAL
STATE OF CALIFORNIA

OC Office: 24461 Ridge Route Drive #100, Laguna Hills, CA 92653 Phone: 949.496.6159 SD Office: 804 Pier View Way #103, Oceanside, CA 92054 Phone: 760.730.5547 LA Office: 837 Traction Avenue, #410, Los Angeles, CA 90013 Phone: 213.278.0112 Web: pjhm.com

HIGHLAND HIGH SCHOOL
50M POOL & AQUATICS CENTER
KERN HIGH SCHOOL DISTRICT

SITE PLAN OVERALL

E-1.0

8/2/2022 11:34:37 AM

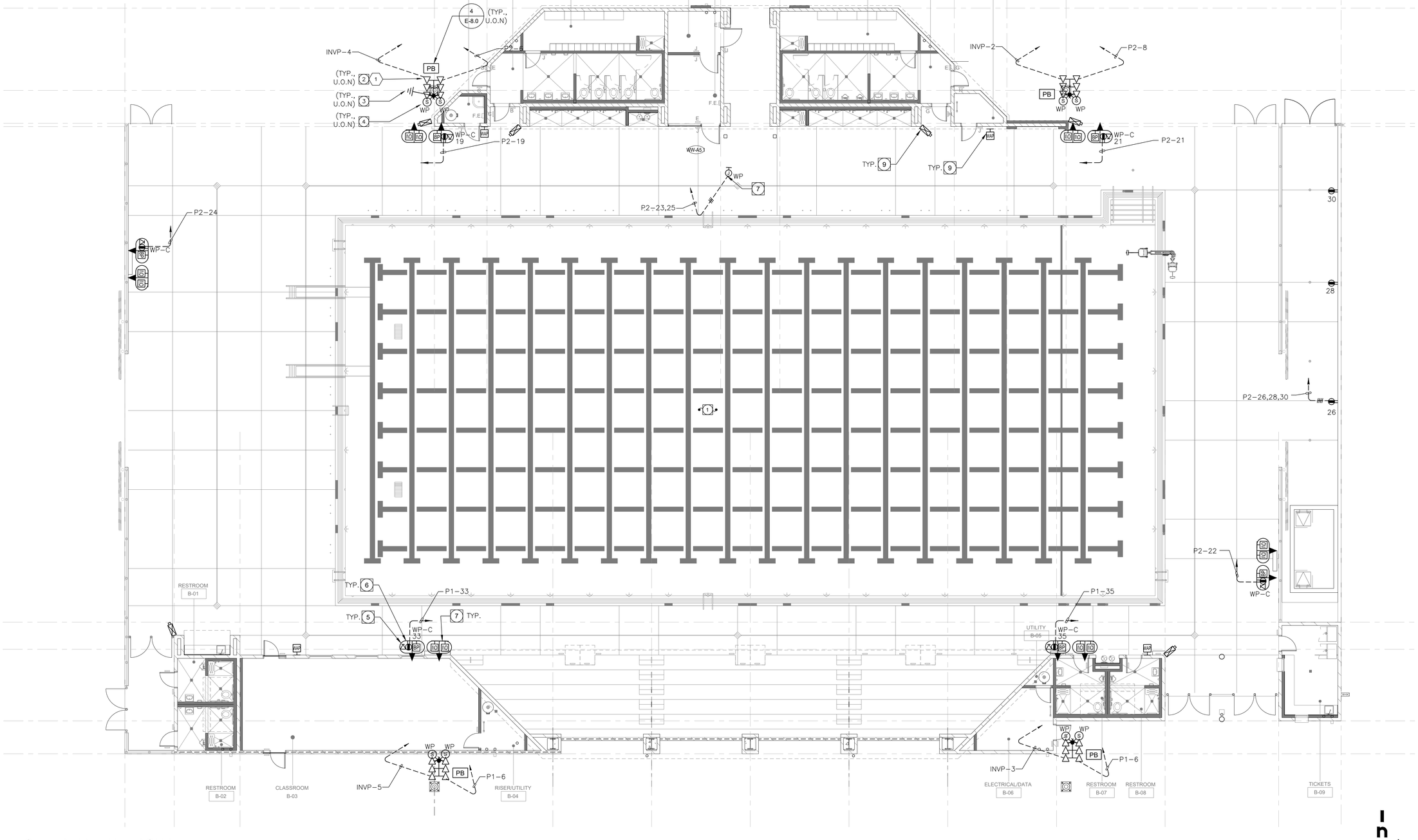

SITE PLAN ENLARGED

1/8" = 1'-0"

SITE PLAN GENERAL NOTES:

1. CONTRACTOR SHALL EXERCISE EXTREME CAUTION IN EXCAVATING AND TRENCHING ON THIS SITE TO AVOID EXISTING DUCTS, PIPING OR CONDUITS, ETC., AND TO PREVENT HAZARDS TO PERSONNEL AND/OR DAMAGE TO EXISTING UNDERGROUND UTILITIES OR STRUCTURES WHETHER OR NOT SHOWN AND INSTALLED BY ANY OTHER CONTRACTS. THE ENGINEER IS NOT RESPONSIBLE FOR THE LOCATION OF UNDERGROUND UTILITIES OR STRUCTURES WHETHER OR NOT SHOWN OR DETAILED AND INSTALLED BY ANY OTHER CONTRACTS. THE CONTRACTOR SHALL IMMEDIATELY NOTIFY THE ENGINEER SHOULD SUCH UNIDENTIFIED CONDITIONS BE DISCOVERED. THESE DRAWINGS AND SPECIFICATIONS DO NOT INCLUDE THE NECESSARY ELEMENTS FOR CONSTRUCTION SAFETY.
2. CALL UNDERGROUND SERVICE ALERT (USA) AT 1 (800) 422-4133 OR APPLICABLE STATE AND LOCAL DIG SAFE OR UNDERGROUND ALERT HOTLINES PRIOR TO CONSTRUCTION START.
3. MINIMUM CONDUIT SIZE SHALL BE 3/4" – U.O.N.
4. MINIMUM CONDUCTOR SIZE SHALL BE #10 AWG. – U.O.N.
5. ALL SITE BRANCH CIRCUITS SHALL INCLUDE AN EQUIPMENT GROUND CONDUCTOR THAT, AT MINIMUM, MATCHES THE SIZE OF THE ASSOCIATED BRANCH CIRCUIT CONDUCTOR. WHERE MULTIPLE BRANCH CIRCUITS ARE ROUTED/GROUPED TOGETHER, THE EQUIPMENT GROUNDING CONDUCTOR SHALL MATCH THE SIZE OF THE LARGEST BRANCH CIRCUIT CONDUCTOR IN THE GROUP.
6. ALL ELECTRICAL EQUIPMENT MOUNTED OUTDOORS SHALL BE WEATHERPROOF (NEMA #3R).
7. ALL CONDUIT ONLY SHALL BE PROVIDED WITH A NYLON PULL STRING.
8. SEE ARCHITECTURAL/LANDSCAPE ARCHITECTURAL PLANS FOR EXACT LOCATIONS OF FIXTURES, PULLBOXES, MANHOLES, OTHER ELECTRICAL DEVICES, ETC. COORDINATE ALL UNDERGROUND STRUCTURES AND CONDUIT ROUTING WITH LANDSCAPE ARCHITECT PRIOR TO ROUGH-IN TO ENSURE THAT SUCH ITEMS ARE NOT PLACED IN CRITICAL LANDSCAPE PLANTING/HARDSCAPE AREAS.
9. UNLESS SPECIFICALLY SHOWN AS (E), (R), (ER), (D), EXISTING OR NON-BOLD, ALL ELECTRICAL DEVICES SHOWN ARE NEW.
10. CONTRACTOR SHALL PROVIDE CONDUIT AND WIRE FOR ALL DEVICES TO PANELBOARD(S) INDICATED ON PLANS FOR A COMPLETE AND OPERABLE SYSTEM.
11. CONTRACTOR SHALL PROVIDE MINIMUM 2#12, 1#12G IN ½" CONDUIT UNLESS OTHERWISE NOTED. REFERENCE WIRE SIZE TABLE CHART ON DETAIL #2, SHEET E-6.0. WHERE REQUIRED, CONDUIT AND WIRE SHALL BE UPSIZED TO MEET THE REQUIREMENT OF THE DEVICE BEING SERVED BY THE BRANCH CIRCUIT. WHERE CONDUIT AND WIRING IS INDICATED AT THE HOME RUN, WIRING AND CONDUIT SHALL CONTINUE AT THAT SIZE FOR THE ENTIRE LENGTH OF THE CIRCUIT.
12. CONTRACTOR SHALL FURNISH ADDITIONAL SWITCHLEGS OR HOT WIRES AS REQUIRED TO MEET THE CONTROL INTENT OF THE DOCUMENTS AND AS REQUIRED BY CODE (I.E. EMERGENCY LIGHTING AND SWITCHED RECEPTACLES).
13. MULTIPLE CIRCUITS MAY BE USED IN A SINGLE RACEWAY. NO MORE THAN (3) DEDICATED CIRCUITS OR (4) CURRENT CARRYING CONDUCTORS SHALL BE INSTALLED IN ANY RACEWAY UNLESS OTHERWISE NOTED. WHERE A COMMON GROUNDED CONDUCTOR IS USED FOR MULTIPLE INDIVIDUAL BRANCH CIRCUITS, PER SECTIONS CEC 200.4, 250.122, 310.15(B)(2), CONDUIT SIZE SHALL BE INCREASED AS REQUIRED FOR THE CONDUCTORS INCLUDING TEMPERATURE DERATING PER CEC TABLE C1.
14. FURNISH AND INSTALL JUNCTION BOXES AS REQUIRED TO MEET MAXIMUM BEND REQUIREMENTS FOR PULLING WIRES PER CEC 358.26. JUNCTION BOXES SHALL BE SIZED AS REQUIRED PER CEC 314.28 UNLESS OTHERWISE NOTED.

PLAN NOTES:

1. REFER TO POOL CONSULTANT PLANS FOR POOL EQUIPMENT/DEVICE LAYOUTS, UNDERWATER LIGHTING LAYOUT, AND ALL ASSOCIATED ELECTRICAL PATHWAYS AND CONNECTIONS.
2. MUSCO LIGHTING AND ACCESSORIES MOUNTED ON 50' POLE. PROVIDE FLOOD LIGHTING ON NORMAL POWER, AND DECK LIGHTING ON EMERGENCY POWER AS INDICATED. PROVIDE ALL REQUIRED EQUIPMENT, ACCESSORIES AND BRACKETS FOR INSTALLATION. REFERENCE LIGHTING FIXTURE SCHEDULE ON SHEET E-7.0 AND MUSCO DRAWINGS FOR ADDITIONAL INFORMATION.
3. PROVIDE GROUNDING TO POLE LIGHTING PER MANUFACTURER'S REQUIREMENTS. CONNECT 1#6CU WIRE TO REBAR SYSTEM. TEST RESISTIVITY PRIOR TO CONCRETE POUR.
4. PROVIDE (2) WEATHERPROOF POLE MOUNTED SPEAKERS FOR POOL AUDIO/VISUAL SYSTEM. REFERENCE MUSCO DRAWINGS FOR MORE INFORMATION. ANY CABLING AND/OR RIGGING UTILIZED TO ATTACH THE SPEAKER CLUSTER SHALL BE MOUNTED IN A METHOD TO AVOID CONTACT WITH THE LIGHT POLE. HOMERUN 1" CONDUIT TO AV RACK LOCATED IN NEW POOL BUILDING. SEE AV WIRING DIAGRAM AND SPECIFICATION FOR ADDITIONAL INFORMATION.
5. PEDESTAL MOUNTED NEMA RECEPTACLE (HUBBELL #2610A).
6. COLE LIGHTING TL410-WCS-PED. PEDESTAL MOUNTED I/O PANEL WITH (1) LINE LEVEL 1/8" CONNECTOR, (2) MICROPHONE LEVEL XLR, AND (1) BLUETOOTH IN. (1) LINE LEVEL OUTPUT 1/8". HOMERUN 1" CONDUIT TO AV RACK LOCATED IN NEW POOL BUILDING. SEE AV WIRING DIAGRAM AND SPECIFICATION FOR ADDITIONAL INFORMATION. PROVIDE (1) 2-PORT DATA PORT WITH (2) CAT6 CABLES. HOMERUN 1" CONDUIT TO IDF RACK LOCATED IN NEAREST POOL BLDG.
7. PEDESTAL MOUNTED BUTTON CONTROL PANEL. HOMERUN (1) CAT6 CABLE, PER SPECIFICATIONS, IN 1" CONDUIT TO AV RACK LOCATED IN NEW POOL BUILDING. SEE AV WIRING DIAGRAM AND SPECIFICATION FOR ADDITIONAL INFORMATION.
8. PROVIDE (2)120V 20A CIRCUITS FOR SCOREBOARD DISPLAY AND (1)1"C FOR CONTROL. VERIFY CONNECTION REQUIREMENTS WITH SCOREBOARD MANUFACTURER DRAWINGS.
9. DEVICE TO BE MOUTNED AT 9'-8" AFG U.O.N. DEVICE(S) ARE O.F.O.I. PROVIDE DATA AT THE INDICATED LOCATIONS.

8/2/2022 11:34:37 AM

IDENTIFICATION STAMP
DIV. OF THE STATE ARCHITECT
APP: 03-122664 INC:
REVIEWED FOR
SS ☑ FLS ☑ ACS ☑
DATE: 05/12/2023

pjhm architects

LICENSED ARCHITECT
RICHARD W. SWARTZ
No. C15585
REN. 02/25
STATE OF CALIFORNIA

tk|sc COLLABORATIVE
11870 Pierce Street, Suite 160
Riverside, California 92505
951.299.4160 www.tk1sc.com
Project Leader - Nikolas Bruno
Electrical Lead - Nikolas Bruno
tk1sc Job #: B2202744.000

REGISTERED PROFESSIONAL ENGINEER
RICHARD W. SWARTZ
No. E15610
EXP. 12/31/2024
ELECTRICAL
STATE OF CALIFORNIA

OC Office: 24461 Ridge Route Drive #100, Laguna Hills, CA 92653 Phone: 949.496.6133 SD Office: 804 Pier View Way #103, Oceanside, CA 92054 Phone: 760.730.5527 LA Office: 837 Traction Avenue, #410, Los Angeles, CA 90013 Phone: 213.278.0172 Web: pjhm.com

HIGHLAND HIGH SCHOOL
50M POOL & AQUATICS CENTER
KERN HIGH SCHOOL DISTRICT

SITE PLAN ENLARGED

E-1.1

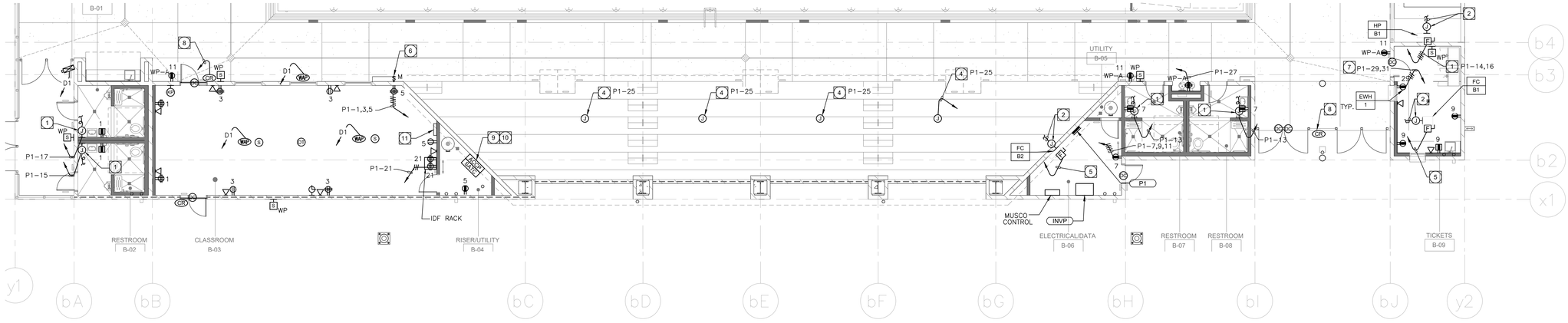

POOL BUILDING B - ELECTRICAL PLAN

1/8" = 1'-0"

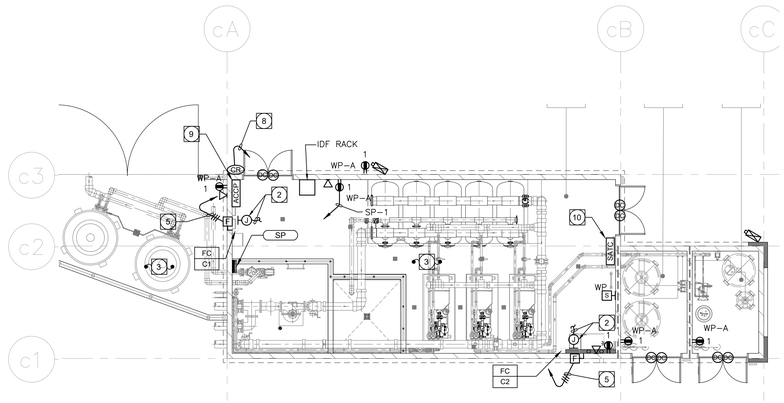

POOL BUILDING C - ELECTRICAL PLAN

1/8" = 1'-0"

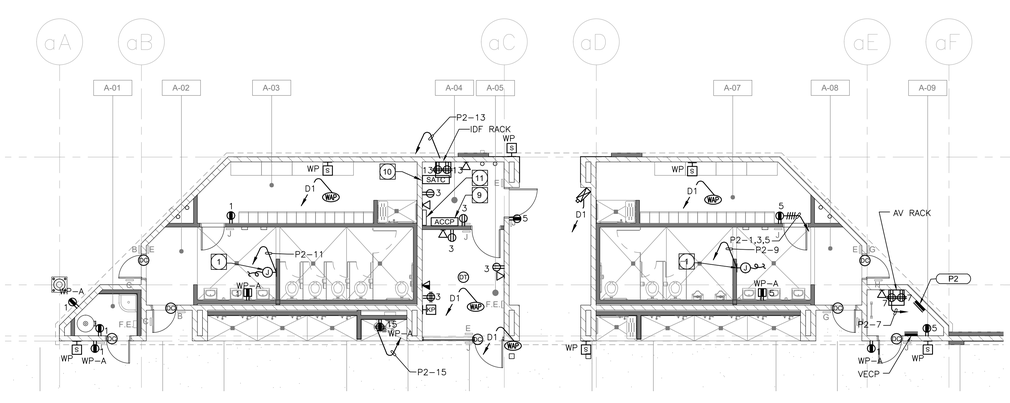

POOL BUILDING A - ELECTRICAL PLAN

1/8" = 1'-0"

POWER PLAN GENERAL NOTES:

1. ALL RECEPTACLES ON COMMON WALLS SHALL BE SEPARATE BOXES AND OFFSET 24-INCHES MINIMUM.
2. ALL PENETRATIONS THROUGH FIRE RATED WALLS SHALL BE PROTECTED FROM THE SPREAD OF FIRE WITH AN APPROVED FIRESTOP SYSTEM EQUAL OR GREATER THAN THE FIRE RATING OF THE WALL.
3. ALL WALL-MOUNTED DEVICE HEIGHTS SHALL BE VERIFIED WITH THE ARCHITECT PRIOR TO ROUGH-IN.
4. ALL FURNITURE FEED LOCATIONS TO BE VERIFIED WITH ARCHITECT AND FURNITURE VENDOR PRIOR TO ROUGH-IN.
5. ALL FURNITURE WHIPS SHALL BE TRIMMED TO REDUCE EXCESS WHIP LENGTH.
6. WHEN EXPOSED CEILINGS OR OPEN GRID CONDITIONS OCCUR, THE CONTRACTOR WILL NEED TO PROVIDE THE FOLLOWING ITEMS:
   a. ALL BRANCH CIRCUITS SHALL BE EMT.
   b. ALL BRANCH CIRCUITS SHALL BE ROUTED ORTHOGONALLY, NEATLY TRAINED, IN PARALLEL TO STRUCTURES OR DUCTWORK. THE TERM "TRAINED" MEANS ALL PARALLEL CONDUITS SHALL MAINTAIN THE SAME SPATIAL RELATIONSHIP WITH EACH OTHER FOR ENTIRE RUN TO INCLUDE RADIUS BENDS AND SWEEPS.
   c. VISUALLY OBJECTIONABLE BRANCH CIRCUITS WILL BE REROUTED AT THE REQUEST OF THE ARCHITECT AT NO ADDITIONAL COST.
7. EXPOSED CABLE/CONDUCTORS INSTALLED IN A PLENUM SPACE SHALL CONFORM TO NEC, OR CEC WHERE ADOPTED, **ARTICLE 300.22(C)**.
8. PROVIDE G.F.C.I. TYPE RECEPTACLE(S) OR RECEPTACLE(S) PROTECTED BY A GFCI CIRCUIT BREAKER(S) WHEN RECEPTACLES ARE 50A OR LESS, 150V TO GROUND OR LESS AND ARE LOCATED WITHIN 6-FEET OF ANY SINK OR THERAPEUTIC TUB, LAUNDRY AREA, SERVING ANY DRINKING FOUNTAIN OR VENDING MACHINE, WITHIN ANY KITCHEN SPACE, LOCKER ROOM AREA, GARAGE AND BATHROOM SPACE AND/OR LOCATED OUTDOORS. WHERE RECEPTACLES ARE NOT READILY ACCESSIBLE, PROVIDE GFCI CIRCUIT BREAKER(S) TO PROTECT THE RESPECTIVE BRANCH CIRCUIT AND PROVIDE ADDITIONAL NEUTRAL CONDUCTORS IN THE BRANCH CIRCUITING AS REQUIRED TO ENSURE PROPER GFCI FUNCTION.
9. PROVIDE OCCUPANCY SENSOR/LIGHTING CONTROL SYSTEM CONTROLLED RECEPTACLE RELAY(S) AS REQUIRED TO SWITCH CONTROLLED RECEPTACLES. CONNECT BRANCH CIRCUITRY AND CONTROL WIRING AS REQUIRED TO ALLOW OCCUPANCY SENSOR/LIGHTING CONTROL SYSTEM RELAY TO SWITCH STANDALONE AND/OR SYSTEMS FURNITURE CONTROLLED RECEPTACLES AS INDICATED ON PLANS. PROVIDE ADDITIONAL CONDUIT, WIRING AND PATHWAYS NECESSARY TO CONNECT BRANCH CIRCUITRY AND CONTROL WIRING TO REMOTE RELAYS TO INCLUDE RELAY(S) LOCATED ON ALTERNATE FLOORS, IN ELECTRICAL ROOMS, ETC.
10. PROVIDE ADDITIONAL J-BOX NEAR PANEL FOR MULTIPLE HOMERUN CIRCUITRY.
11. UNLESS SPECIFICALLY SHOWN AS (E), (R), (ER), (D), EXISTING OR NON-BOLD, ALL ELECTRICAL DEVICES SHOWN ARE NEW.
12. PROVIDE REDUNDANT GROUND PATH IN ALL BRANCH CIRCUITS SERVING PATIENT CARE AREAS CONSISTING OF A SEPARATE, INSULATED EQUIPMENT GROUNDING CONDUCTOR PER NEC, OR CEC WHERE ADOPTED, ART **517.13**.

COMMUNICATIONS PATHWAYS GENERAL NOTES:

1. CONDUITS SHALL (a) CONTAIN NO CONTINUOUS SECTIONS LONGER THAN 30M (98 FT.), AND (b) CONTAIN NO MORE THAN (2) 90° BENDS OR (1) REVERSE BEND WITHOUT INSTALLING A PULL BOX. SPLIT CONDUITS IN PLACE OF PULL BOXES ARE UNACCEPTABLE.
2. CONDUITS SHALL CONTAIN PLASTIC OR NYLON PULL TAPE RATED AT 200 LBS. WITH A MINIMUM OF 5 FEET OF EXTRA PULL TAPE COILED AT EACH END.
3. CONDUIT BEND RADIUS SHALL BE (a) A MINIMUM OF 6 TIMES THE INTERNAL CONDUIT DIAMETER FOR CONDUITS 2-INCHES IN DIAMETER OR LESS, AND (b) 10 TIMES THE INTERNAL CONDUIT DIAMETER FOR CONDUITS MORE THAN 2-INCHES IN DIAMETER.
4. TERMINATE CONDUIT STUBS AND SLEEVES THAT PROTRUDE THROUGH STRUCTURAL FLOORS 2-INCHEST TO 3-INCHES ABOVE THE FLOOR SURFACE.
5. INSTALL BUSHINGS OR BELL ENDS AS REQUIRED ON ALL CONDUITS.
6. FLEX CONDUIT IS UNACCEPTABLE FOR USE AS A COMMUNICATIONS CONDUIT EXCEPT AT SEISMIC JOINTS AND/OR IF APPROVED IN WRITING BY THE ENGINEER.
7. ALL UNDER SLAB OR IN-SLAB CONDUITS SHALL BE INSTALLED IN A MANNER THAT PREVENTS WATER INFILTRATION OF THE CONDUIT. IT IS THE CONTRACTOR'S RESPONSIBILITY TO ENSURE GROUND WATER, RAIN WATER OR CONSTRUCTION WATER IS PREVENTED FROM ENTERING AND/OR REMOVED FROM THE CONDUITS PRIOR TO PLACEMENT OF COMMUNICATIONS CABLES. SEE ELECTRICAL SPECIFICATIONS, DETAILS AND PLANS FOR ADDITIONAL CONDUIT SEALING REQUIREMENTS.
8. ALL PULL BOXES SHALL BE SIZED AND INSTALLED PER ANSI-TIA-569-C. PULL BOXES FOR IN/UNDER SLAB CONDUIT RUNS ARE NOT PERMITTED UNLESS OTHERWISE NOTED. PULL BOXES FOR OVERHEAD CONDUIT RUNS SHALL BE LOCATED ABOVE ACCESSIBLE CEILINGS WITHIN THE ACCESSIBLE CEILING SPACE AND SUPPORTED INDEPENDENTLY FROM THE STRUCTURE AND CONDUIT SUPPORTS. PULL BOXES FOR ROOF MOUNTED OR EXTERIOR ABOVE GRADE APPLICATIONS SHALL BE NEMA 3R RATED. PULL BOXES SHALL BE SIZED ACCORDING TO THE FOLLOWING:

CONDUIT SIZE	WIDTH	LENGTH	DEPTH	WIDTH INCREASE PER ADDITIONAL CONDUIT
1"	4"	16"	3"	2"
2"	8"	36"	4"	5"
3"	12"	48"	5"	6"
4"	15"	60"	8"	8"

FOR OTHER CONDUIT SIZES REFER TO ANSI/TIA-569-C TABLE 12. - LATEST PUBLISHED EDITION.

9. CONDUIT(S) SHALL EXIT A PULL BOX ON THE WALL OPPOSITE THE WALL ENTERED.
10. PROVIDE LABELING OF EACH CONDUIT PER GENERAL ELECTRICAL SPECIFICATIONS.
11. PROVIDE INTERNAL/EXTERNAL GAS AND WATER TIGHT MECHANICAL SEALING/PLUGGING OF EACH BUILDING ENTRY CONDUIT AS SPECIFIED ELSEWHERE IN THE DRAWINGS AND SPECIFICATIONS.
12. MC CABLE IS NOT ALLOWED ON THIS PROJECT. CONTRACTOR SHALL NOT USE MC CABLE.

PLAN NOTES:

1. CONNECT COMPLETE TO ELECTRIC HAND DRYER(S) PER MANUFACTURER'S REQUIREMENTS.
2. PROVIDE 3/4" C.O.(S) TO RESPECTIVE CONTROL DEVICE(S) FOR CONTROL WIRING. REFER TO THE EQUIPMENT CONTROL WIRING DIAGRAMS FOR ADDITIONAL INFORMATION.
3. ALL CONDUIT AND BOXES EXPOSED TO POOL CHEMICALS SHALL BE PVC COATED PER NEC TO PREVENT CORROSION.
4. CONNECT COMPLETE TO CEILING FANS PER MANUFACTURER'S REQUIREMENTS.
5. INDOOR UNIT POWERED THROUGH OUTDOOR UNIT. REFER TO MECHANICAL PLANS FOR ADDITIONAL INFORMATION.
6. SWITCH FOR CEILING FANS IN A LOCKABLE AND WEATHERPROOF ENCLOSURE.
7. CONNECT COMPLETE TO WATER HEATER AS REQUIRED. PROVIDE CODE SIZED DISCONNECT AS REQUIRED. REFER TO PLUMBING DRAWINGS FOR MORE INFORMATION AND EXACT MOUNTING LOCATION.
8. PROXIMITY CARD READER WITH 3/4" C. WITH CONDUCTORS BACK TO HEADEND LOCATION.
9. ACCESS CONTROL HEAD END PER DISTRICT STANDARDS. CONTRACTOR SHALL CONFIRM ALL DISTRICT APPROVED ACCESS CONTROL EQUIPMENT PRIOR TO PROCUREMENT.
10. SECURITY TERMINAL CABINET.
11. CROSS-CONNECTION BLOCKS FOR ANALOG TELEPHONE SYSTEM. MOUNT TO BACKBOARD IN FIELD. PROVIDE ALL CROSS-CONNECT TO ANALOG TELEPHONE SYSTEM DIAGRAM FOR ADDITIONAL REQUIREMENTS.

8/2/2022 11:34:37 AM

IDENTIFICATION STAMP
DIV. OF THE STATE ARCHITECT
APP: 03-122664 INC:
REVIEWED FOR
SS ☑ FLS ☑ ACS ☑
DATE: 05/12/2023

pjhm architects
LICENSED ARCHITECT
RICHARD W. RISBEY
NO. C15585
REN. 02/25
STATE OF CALIFORNIA
tk|sc COLLABORATIVE
11870 Pierce Street, Suite 160
Riverside, California 92505
951.299.4160 www.tk1sc.com
Project Leader - Nikolas Bruno
Electrical Lead - Nikolas Bruno
tk1sc Job #: B2202744.000
REGISTERED PROFESSIONAL ENGINEER
RAYMOND W. SWARTZ
No. E15610
ELECTRICAL
STATE OF CALIFORNIA
Oceanside, CA • 92054 Phone: 760.730.5557 LA Office: 837 Traction Avenue, #410, Los Angeles, CA • 90013 Phone: 213.278.0172 Web: pjhm.com

HIGHLAND HIGH SCHOOL
50M POOL & AQUATICS CENTER

KERN HIGH SCHOOL DISTRICT

OC Office: 24461 Ridge Route Drive #100, Laguna Hills, CA • 92653 Phone: 949.496.6159 SD Office: 804 Pier View Way #103, Oceanside, CA • 92054 Phone: 760.730.5557

POOL BUILDING - ELECTRICAL PLAN

E-3.0

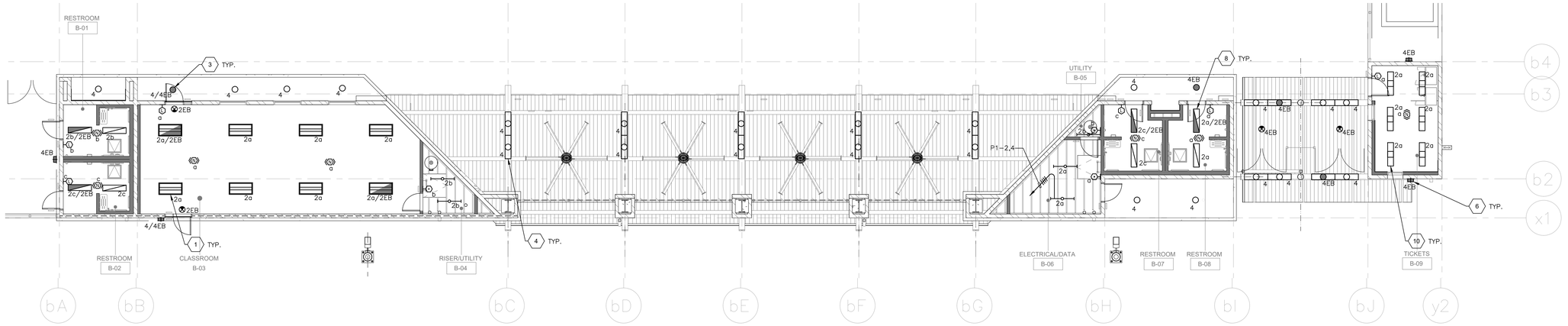

POOL BUILDING B - LIGHTING PLAN

1/8" = 1'-0"

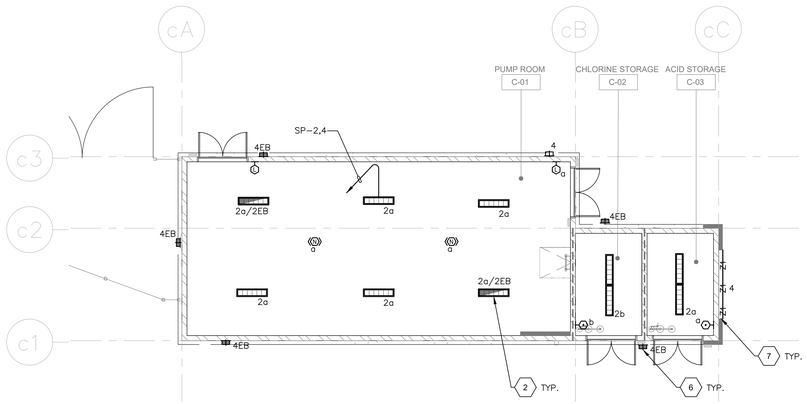

POOL BUILDING C - LIGHTING PLAN

1/8" = 1'-0"

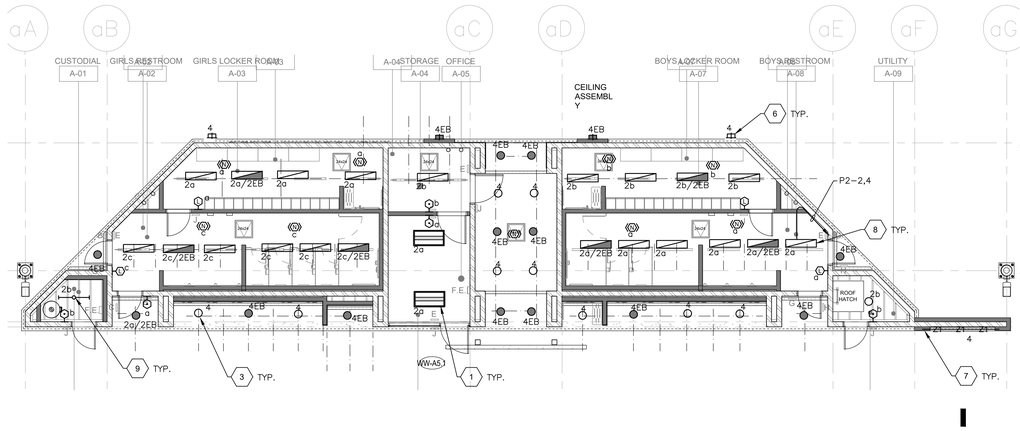

POOL BUILDING A - LIGHTING PLAN

1/8" = 1'-0"

LIGHTING PLAN GENERAL NOTES:

1. REFER TO ARCHITECTURAL PLANS FOR EXACT LOCATION AND ELEVATION OF ALL LIGHTING FIXTURES AND ALL DEVICES. ALL WALL-MOUNTED DEVICE HEIGHTS SHALL BE VERIFIED WITH THE ARCHITECT PRIOR TO ROUGH-IN.
2. VERIFY EXACT CEILING CONSTRUCTION WITH ARCHITECTURAL REFLECTED CEILING PLAN AND SPECS. PROVIDE LIGHTING FIXTURES WITH ALL NECESSARY MOUNTING HARDWARE.
3. ALL RECESSED FIXTURES SHALL BE PROVIDED WITH ALL STRUCTURAL SUPPORTS AS REQUIRED BY THE IBC, OR CBC WHERE ADOPTED, IN ADDITION TO ANY LOCAL CODES.
4. ALL PERIMETER AND COVE LIGHTING SHALL EXTEND THE FULL LENGTH OF THE WALLS OR COVE. CONTRACTOR TO FIELD MEASURE COVE LENGTH AND ORDER QUANTITY OF FIXTURES AS REQUIRED.
5. ALL LINE VOLTAGE DIMMING BRANCH CIRCUITS SHALL BE PROVIDED WITH A DEDICATED NEUTRAL CONDUCTOR FOR EACH ZONE/CHANNEL.
6. RECESSED FIXTURES LOCATED IN A FIRE-RATED CEILING OR WALL SHALL BE PROVIDED WITH A 5-SIDED, RATED ENCLOSURE SO CONSTRUCTED AS TO ALLOW CODE AND MANUFACTURER-REQUIRED CLEARANCES BETWEEN THE FIXTURE AND THE ENCLOSURE.
7. REFER TO ARCHITECTURAL REFLECTED CEILING PLANS FOR EXIT SIGN CHEVRONS AND NUMBER OF FACES PER EXIT SIGN. ANY DISCREPANCIES BETWEEN EXIT SIGNS SHOWN ON THE ELECTRICAL AND ARCHITECTURAL PLANS SHALL BE BROUGHT TO THE ATTENTION OF THE ARCHITECT PRIOR TO ORDERING EXIT SIGNS.
8. WHEN EXPOSED CEILINGS OR OPEN GRID CONDITIONS OCCUR, THE CONTRACTOR WILL NEED TO PROVIDE THE FOLLOWING ITEMS:
   a. ALL BRANCH CIRCUITS SHALL BE EMT.
   b. ALL BRANCH CIRCUITS SHALL BE ROUTED ORTHOGONALLY, NEATLY TRAINED, IN PARALLEL TO STRUCTURES OR DUCTWORK. THE TERM "TRAINED" MEANS ALL PARALLEL CONDUITS SHALL MAINTAIN THE SAME SPATIAL RELATIONSHIP WITH EACH OTHER FOR ENTIRE RUN TO INCLUDE RADIUS BENDS AND SWEEPS.
   c. VISUALLY OBJECTIONABLE BRANCH CIRCUITS WILL BE REROUTED AT THE REQUEST OF THE ARCHITECT AT NO ADDITIONAL COST.
9. ALL LED REMOTE INDICATORS FOR DUCT DETECTORS AND FIRE/SMOKE DAMPERS REQUIRED BY THE LOCAL AHJ SHALL BE LOCATED IN CEILINGS IN COORDINATION WITH ARCHITECT PRIOR TO ANY ROUGH-IN.
10. PROVIDE ADDITIONAL J-BOX NEAR PANEL FOR MULTIPLE HOMERUN CIRCUITRY.
11. UNLESS SPECIFICALLY SHOWN AS (E), (R), (ER), (D), EXISTING OR NON-BOLD, ALL ELECTRICAL DEVICES SHOWN ARE NEW.
12. REFER TO GENERAL POWER PLAN NOTES AND COMMUNICATIONS PATHWAYS GENERAL NOTE FOR ADDITIONAL REQUIREMENTS WHEN POWER AND/OR DATA DEVICES ARE SHOWN ON THIS PLAN.
13. ALL PENETRATIONS THROUGH FIRE RATED WALLS SHALL BE PROTECTED FROM THE SPREAD OF FIRE WITH AN APPROVED FIRESTOP SYSTEM EQUAL OR GREATER THAN THE FIRE RATING OF THE WALL.
14. PROVIDE REDUNDANT GROUND PATH IN ALL BRANCH CIRCUITS SERVING PATIENT CARE AREAS CONSISTING OF A SEPARATE, INSULATED EQUIPMENT GROUNDING CONDUCTOR PER NEC, OR CEC WHERE ADOPTED, ART 517.13.

PLAN NOTES:

1. MUSCO LIGHTING AND ACCESSORIES MOUNTED ON 50' POLE. PROVIDE FLOOD LIGHTING ON NORMAL POWER, AND DECK LIGHTING ON EMERGENCY POWER AS INDICATED. PROVIDE ALL REQUIRED EQUIPMENT, ACCESSORIES AND BRACKETS FOR INSTALLATION. REFERENCE LIGHTING FIXTURE SCHEDULE ON SHEET E-7.0 AND MUSCO DRAWINGS FOR ADDITIONAL INFORMATION.
2. REFER TO POOL CONSULTANT PLANS FOR POOL EQUIPMENT/DEVICE LAYOUTS; UNDERWATER LIGHTING LAYOUT, AND ALL ASSOCIATED ELECTRICAL PATHWAYS AND CONNECTIONS.

NOTE:
1. LIGHT FIXTURE TYPE, TYPICAL.
REFER TO LIGHTING FIXTURE SCHEDULE ON SHEET E-7.0.

IDENTIFICATION STAMP
DIV. OF THE STATE ARCHITECT
APP: 03-122664 INC:
REVIEWED FOR
SS ☑ FLS ☑ ACS ☑
DATE: 05/12/2023

pjhm architects
LICENSED ARCHITECT
RICHARD W. RISBY
NO. C15585
REN. 02/25
STATE OF CALIFORNIA
tk|sc COLLABORATIVE
11870 Pierce Street, Suite 160
Riverside, California 92505
951.299.4160 www.tk1sc.com
Project Leader - Nikolas Bruno
Electrical Lead - Nikolas Bruno
tk1sc Job #: B2202744.000
REGISTERED PROFESSIONAL ENGINEER
RICHMOND W. SIMPSON
No. E15610
EXP. 12-31-2024
ELECTRICAL
STATE OF CALIFORNIA
OC Office: 24461 Ridge Route Drive #100, Laguna Hills, CA 92653 Phone: 949.496.6135 SD Office: 804 Pier View Way #103, Oceanside, CA 92054 Phone: 760.730.5527 LA Office: 837 Traction Avenue, #410, Los Angeles, CA 90013 Phone: 213.278.0112 Web: pjhm.com

HIGHLAND HIGH SCHOOL
50M POOL & AQUATICS CENTER
KERN HIGH SCHOOL DISTRICT

POOL BUILDING - LIGHTING PLAN
E-4.0

8/2/2022 11:34:37 AM

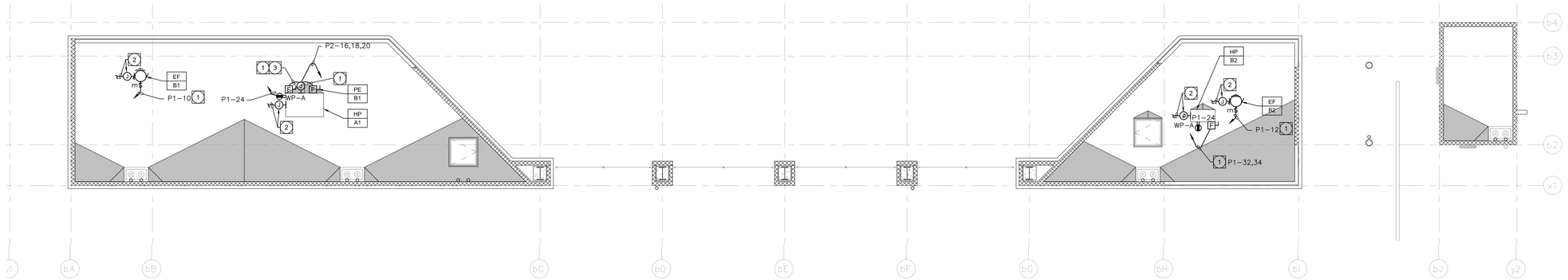

POOL BUILDING B - ROOF PLAN

1/8" = 1'-0"

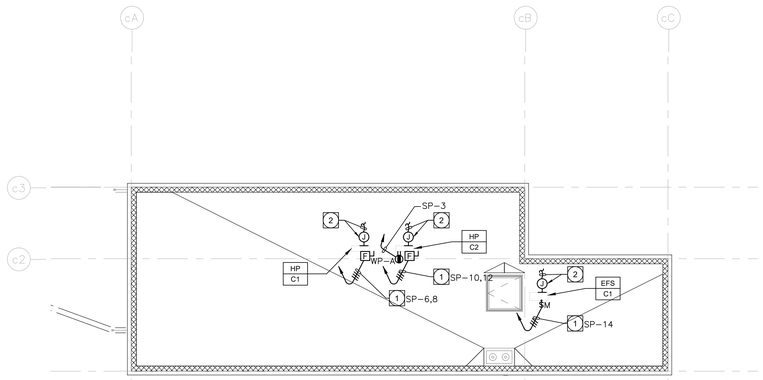

POOL BUILDING C - ROOF PLAN

1/8" = 1'-0"

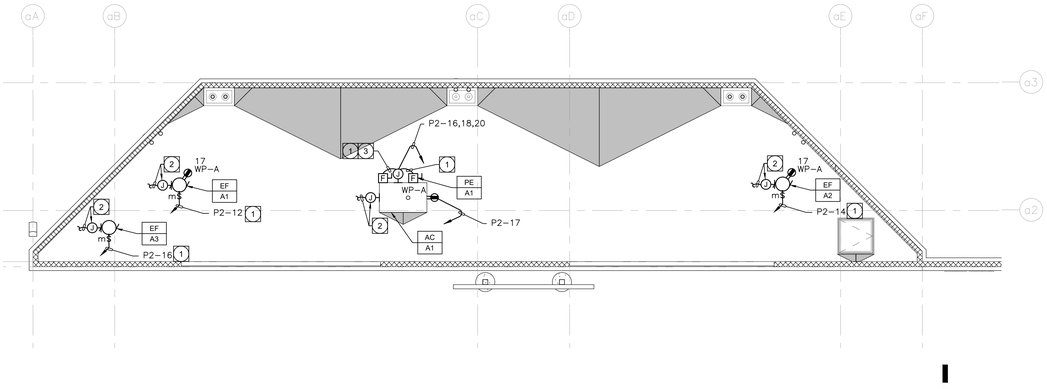

POOL BUILDING A - ROOF PLAN

1/8" = 1'-0"

ROOF PLAN GENERAL NOTES:

1. ELECTRICAL CONTRACTOR SHALL REFER TO MECHANICAL/PLUMBING AND ARCHITECTURAL DRAWINGS FOR EXACT LOCATIONS AND CHARACTERISTICS OF ALL EQUIPMENT LISTED IN SCHEDULE. ANY MODIFICATIONS AND/OR ADDITIONAL WORK NECESSARY SHALL BE INCLUDED IN THE BASE BID.
2. ALL TEMPERATURE CONTROL AND INTERLOCK CONDUIT AND WIRING SHALL BE BY ELECTRICAL CONTRACTOR UNLESS OTHERWISE NOTED. SEE MECHANICAL/PLUMBING DRAWINGS FOR ALL INFORMATION.
3. ELECTRICAL CONTRACTOR SHALL VERIFY THE EXACT LOCATION OF ALL CONNECTION POINTS WITH THE EQUIPMENT INSTALLER PRIOR TO ROUGH–IN.
4. ELECTRICAL CONTRACTOR SHALL PROVIDE LOCAL REMOTE DISCONNECTING MEANS FOR ALL ELECTRIC HEATING EQUIPMENT IF REQUIRED BY THE LOCAL ELECTRICAL CODE.
5. ELECTRICAL CONTRACTOR SHALL COORDINATE THE ROUTING OF CONDUIT/WIRING TO ROOF–MOUNTED EQUIPMENT WITH EQUIPMENT INSTALLER PRIOR TO ROUGH–IN. WHERE ROOF–MOUNTED EQUIPMENT IS MANUFACTURED TO BE FED FROM WITHIN MECHANICAL CURB ASSEMBLY – SEPARATE ROOF PENETRATIONS FOR WIRING CONNECTIONS SHALL NOT BE PERMITTED. ALL WIRING SHALL BE BELOW THE ROOF IN AN ACCESSIBLE CEILING SPACE LOCATION.
6. ALL ROOF MOUNTED EQUIPMENT SHALL BE NEMA 3R RATED.
7. UNLESS SPECIFICALLY SHOWN AS (E), (R), (ER), (D), EXISTING OR NON–BOLD, ALL ELECTRICAL DEVICES SHOWN ARE NEW.
8. CONTRACTOR SHALL PROVIDE CONDUIT AND WIRE FOR ALL DEVICES TO PANELBOARD(S) INDICATED ON PLANS FOR A COMPLETE AND OPERABLE SYSTEM.
9. CONTRACTOR SHALL PROVIDE MINIMUM 2#12, 1#12G IN ½" CONDUIT UNLESS OTHERWISE NOTED. REFERENCE WIRE SIZE TABLE CHART ON DETAIL #2, SHEET E–6.0. WHERE REQUIRED, CONDUIT AND WIRE SHALL BE UPSIZED TO MEET THE REQUIREMENT OF THE DEVICE BEING SERVED BY THE BRANCH CIRCUIT. WHERE CONDUIT AND WIRING IS INDICATED AT THE HOME RUN, WIRING AND CONDUIT SHALL CONTINUE AT THAT SIZE FOR THE ENTIRE LENGTH OF THE CIRCUIT.
10. CONTRACTOR SHALL FURNISH ADDITIONAL SWITCHLEGS OR HOT WIRES AS REQUIRED TO MEET THE CONTROL INTENT OF THE DOCUMENTS AND AS REQUIRED BY CODE (I.E. EMERGENCY LIGHTING AND SWITCHED RECEPTACLES).
11. MULTIPLE CIRCUITS MAY BE USED IN A SINGLE RACEWAY. NO MORE THAN (3) DEDICATED CIRCUITS OR (4) CURRENT CARRYING CONDUCTORS SHALL BE INSTALLED IN ANY RACEWAY UNLESS OTHERWISE NOTED. WHERE A COMMON GROUNDED CONDUCTOR IS USED FOR MULTIPLE INDIVIDUAL BRANCH CIRCUITS, PER SECTIONS CEC 200.4, 250.122, 310.15(B)(2), CONDUIT SIZE SHALL BE INCREASED AS REQUIRED FOR THE CONDUCTORS INCLUDING TEMPERATURE DERATING PER CEC TABLE C1.
12. FURNISH AND INSTALL JUNCTION BOXES AS REQUIRED TO MEET MAXIMUM BEND REQUIREMENTS FOR PULLING WIRES PER CEC 358.26. JUNCTION BOXES SHALL BE SIZED AS REQUIRED PER CEC 314.28 UNLESS OTHERWISE NOTED.

MOTORIZED EQUIPMENT SCHEDULE SPECIFIC NOTES:

A. FUSED AS RECOMMENDED BY MANUFACTURER.

B. INDOOR UNIT POWERED THROUGH OUTDOOR UNIT. REFER TO MECHANICAL PLANS FOR ADDITIONAL INFORMATION.

C. REFER TO 'AC UNIT POWER EXHAUST – 1HP' FOR MODULATING POWER EXHAUST EQUIPMENT RATING INFORMATION.

MOTORIZED EQUIPMENT SCHEDULE GENERAL NOTES:

1. ALL BRANCH CIRCUIT DATA IS BASED UPON METALLIC CONDUITS. IF THE CONTRACTOR ELECTS TO USE NONMETALLIC CONDUITS, AN EQUIPMENT GROUNDING CONDUCTOR SHALL BE INSTALLED PER NEC, OR CEC WHERE ADOPTED, TABLE **250.122** AND THE CONDUIT SIZE SHALL BE INCREASED ACCORDINGLY.
2. ELECTRICAL CONTRACTOR SHALL REFER TO ALL DOCUMENTS RELATED TO THE EQUIPMENT (I.E. SHOP DRAWINGS, CONSTRUCTION DOCUMENTS, ETC.) IN REGARDS TO ELECTRICAL CHARACTERISTICS OF ALL EQUIPMENT LISTED IN THE SCHEDULE. ANY MODIFICATION AND/OR ADDITIONAL WORK NECESSARY SHALL BE INCLUDED IN THE BASE BID.
3. ELECTRICAL CONTRACTOR SHALL CHECK THE ROTATION OF ALL THREE PHASE MOTORS AND CORRECT THE ROTATION IF REVERSED.
4. ELECTRICAL CONTRACTOR SHALL PROVIDE FUSES SIZED PER THE EQUIPMENT NAMEPLATE INFORMATION.
5. DISCONNECT SWITCHES SHALL BE HEAVY DUTY TYPE, EXTERNALLY OPERATED, QUICK MAKE QUICK BREAK AND SHALL BE FUSIBLE OR NON FUSIBLE AS INDICATED. A MAXIMUM VOLTAGE, CURRENT AND HORSEPOWER SHALL BE CLEARLY MARKED ON SWITCH ENCLOSURE. SWITCHES HAVING DUAL RATINGS (HIGHER RATINGS WHEN USED WITH DUAL ELEMENT FUSES) SHALL HAVE RATINGS INDICATED ON METAL PLATES RIVETED OR OTHERWISE PERMANENTLY ATTACHED TO THE ENCLOSURE. WHEN INDICATED, TOGGLE SWITCHES SHALL BE MOTOR RATED FOR THE APPLICATION.
6. STARTERS SHALL BE FULL VOLTAGE, REDUCED VOLTAGE OR COMBINATION DISCONNECT AND STARTER, WITH CONTROL VOLTAGE AS REQUIRED, AS INDICATED ON THE DOCUMENTS RELATED TO THE EQUIPMENT, SUCH AS SHOP DRAWINGS, CONSTRUCTION DOCUMENTS, ETC. STARTERS SHALL INCLUDE MOTOR OVERLOAD PROTECTION, PHASE LOSS AND PHASE UNBALANCE PROTECTION AS REQUIRED.
7. ALL TERMINATIONS AND ENCLOSURES SHALL BE RATED FOR USE WITH 75 DEGREE C CONDUCTORS.
8. COMPLETE INSTALLATION SHALL CONFORM TO THE REQUIREMENTS OF NEC (OR CEC WHERE ADOPTED) ARTICLES **430 AND 440.**
9. CONTRACTOR TO COORDINATE WITH ALL OTHER PROJECT TRADES AND WITH OWNER/ TENANT FOR TO OBTAIN RESPECTIVE EQUIPMENT SCCR AND PROVIDE APPROPRIATE PROTECTIVE DEVICES TO LIMIT AVAILABLE FAULT CURRENT TO LESS THAN THE EQUIPMENT NAMEPLATE SCCR PER NEC (OR CEC WHERE ADOPTED) **110.10.** SEE POWER SYSTEM STUDY SPECIFICATIONS FOR ADDITIONAL REQUIREMENTS.
10. UNLESS OTHERWISE NOTED, MOCP VALUES FOR VFD–EQUIPPED DEVICE ARE SIZED PER NEC (OR CEC WHERE ADOPTED) **430.130(A).1.** CONTRACTOR SHALL COORDINATE WITH ALL OTHER PROJECT TRADES AND WITH OWNER/ TENANT (IF PROVIDING EQUIPMENT ON PROJECT) TO OBTAIN NAMEPLATE VFD–EQUIPPED DEVICE MOCP VALUE FROM MANUFACTURER INSTALLATION INSTRUCTIONS AND PROVIDE APPROPRIATE PROTECTIVE DEVICES TO COMPLY WITH NEC (OR CEC WHERE ADOPTED) **430.130(A).2.**

PLAN NOTES:

1. REFER TO MOTORIZED EQUIPMENT SCHEDULE FOR MOTOR FEEDER/ BRANCH CIRCUIT INFORMATION.
2. PROVIDE 3/4" C.O.(S) TO RESPECTIVE CONTROL DEVICE(S) FOR CONTROL WIRING. REFER TO THE EQUIPMENT CONTROL WIRING DIAGRAMS FOR ADDITIONAL INFORMATION.
3. CONNECT TO AC UNIT MODULATING POWER EXHAUST AS REQUIRED. REFER TO MECHANICAL DRAWINGS AND CONTROL DIAGRAMS.

MOTORIZED EQUIPMENT SCHEDULE

ITEM	DESCRIPTION	EQUIPMENT RATING VOLTS	PH.	MOTOR HP	MOTOR FLA	VFD FLA	MCA	MOCP	SCCR	DISC. SW. SIZE STARTER SIZE	CIRCUIT DATA CONDUIT – WIRE	SPECIFIC NOTES
EF A1	EXHAUST FAN	115	1	.25	5.8	–	7.3	15	–	30AS/1P –	3/4"C.–2#12,1#12GND. –	–
EF A2	EXHAUST FAN	115	1	.25	5.8	–	7.3	15	–	30AS/1P –	3/4"C.–2#12,1#12GND. –	–
EF A3	EXHAUST FAN	115	1	.25	5.8	–	7.3	15	–	30AS/1P –	3/4"C.–2#12,1#12GND. –	–
EF B1	EXHAUST FAN	115	1	.25	5.8	–	7.3	15	–	30AS/1P –	3/4"C.–2#12,1#12GND. –	–
EF B2	EXHAUST FAN	115	1	.25	5.8	–	7.3	15	–	30AS/1P –	3/4"C.–2#12,1#12GND. –	–
EFS C1	EXHAUST FAN	115	1	.25	5.8	–	7.3	15	–	30AS/1P –	3/4"C.–2#12,1#12GND. –	–
HP B1	HEAT PUMP (OUTDOOR)	208	1	–	–	–	19	26	–	30AS/2P –	3/4"C.–3#10,1#10GND. –	A
HP B2	HEAT PUMP (OUTDOOR)	208	1	–	–	–	11	28	–	30AS/2P –	3/4"C.–3#10,1#10GND. –	A
HP C1	HEAT PUMP (OUTDOOR)	208	1	–	–	–	25	31	–	60AS/2P –	1"C.–3#8,1#8GND. –	A
HP C2	HEAT PUMP (OUTDOOR)	208	1	–	–	–	25	31	–	60AS/2P –	1"C.–3#8,1#8GND. –	A
FC B1	FAN COIL (INDOOR)	208	1	–	–	–	0.2	15	–	30AS/2P –	3/4"C.–3#12,1#12GND. –	A,B
FC B2	FAN COIL (INDOOR)	208	1	–	–	–	0.2	15	–	30AS/2P –	3/4"C.–3#12,1#12GND. –	A,B
FC C1	FAN COIL (INDOOR)	208	1	–	–	–	0.63	15	–	30AS/2P –	3/4"C.–3#12,1#12GND. –	A,B
FC C2	FAN COIL (INDOOR)	208	1	–	–	–	0.63	15	–	30AS/2P –	3/4"C.–3#12,1#12GND. –	A,B
AC A1	AIR CONDITIONER	208	3	–	–	–	30	40	–	60AS/3P –	1"C.–4#8,1#8GND. –	A,C
AC B1	AIR CONDITIONER	208	3	–	–	–	26	40	–	60AS/3P –	1"C.–4#8,1#8GND. –	A,C
	POWER EXHAUST (1HP)	460	3	1.0	1.8	–	2.3	15	–	30AS/3P –	3/4"C.–4#12,1#12GND. –	A

IDENTIFICATION STAMP
DIV. OF THE STATE ARCHITECT
APP: 03-122664 INC:
REVIEWED FOR
SS ☑ FLS ☑ ACS ☑
DATE: 05/12/2023

pjhm architects
LICENSED ARCHITECT RICHARD W. SIMPSON NO. C15585 REN. 02/25 STATE OF CALIFORNIA
tk|sc COLLABORATIVE
11870 Pierce Street, Suite 160
Riverside, California 92505
951.299.4160 www.tk1sc.com
Project Leader - Nikolas Bruno
Electrical Lead - Nikolas Bruno
tk1sc Job #: B2202744.000
REGISTERED PROFESSIONAL ENGINEER RICHARD W. SIMPSON No. E15610 ELECTRICAL STATE OF CALIFORNIA
OC Office: 24461 Ridge Route Drive #100, Laguna Hills, CA • 92653 Phone: 949.496.6100 SD Office: 804 Pier View Way #103, Oceanside, CA • 92054 Phone: 760.730.5527 LA Office: 837 Traction Avenue, #410, Los Angeles, CA • 90013 Phone: 213.278.0172 Web: pjhm.com

HIGHLAND HIGH SCHOOL
50M POOL & AQUATICS CENTER
KERN HIGH SCHOOL DISTRICT

ROOF PLAN

E–5.0

8/2/2022 11:34:37 AM

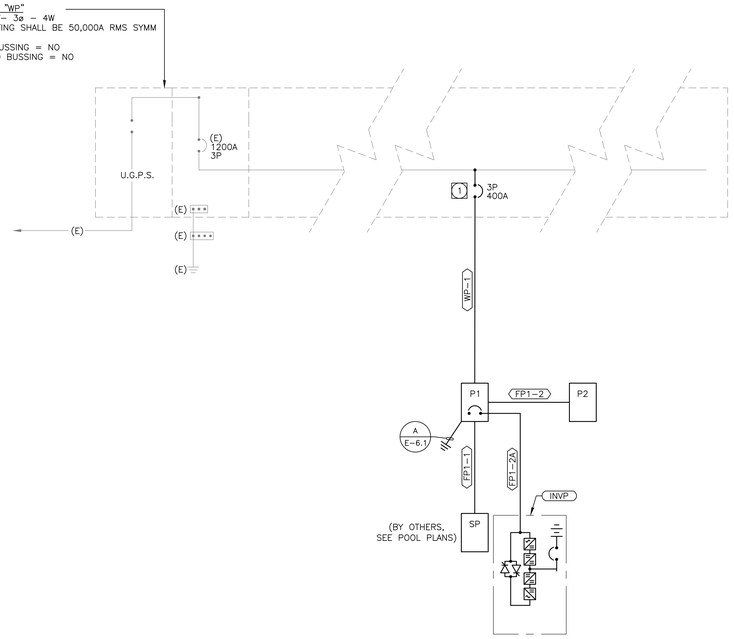

SINGLE LINE DISTRIBUTION DIAGRAM

SCALE: N.T.S.

1

GENERAL SINGLE LINE DIAGRAM NOTES:

1. ALL SWITCHGEAR SHALL BE SQUARE D OR EQUAL BY CUTLER–HAMMER, RSE–SIERRA, G.E., SIEMENS, OR Z–POWER AND DISTRIBUTION.
2. ALL ITEMS DEPICTED ON THE SINGLE LINE DRAWINGS SHALL BE ASSUMED AS NEW U.O.N.
3. ALL OVERCURRENT DEVICES IN AN INDIVIDUAL PIECE OF EQUIPMENT SHALL HAVE AN AIC RATING EQUAL TO THE OVERALL RATING OF THE EQUIPMENT–SERIES RATING OF DEVICES WITHIN A PIECE OF EQUIPMENT IS NOT ALLOWED. SEE SPECIFICATIONS FOR MORE INFORMATION.
4. SERIES RATED DEVICES SHALL HAVE BEEN INVESTIGATED BY U.L. IN COMBINATION WITH THE END USE EQUIPMENT AND IN THE EQUIPMENT IN WHICH THESE DEVICES ARE USED AND SHALL BE MARKED WITH A SERIES RATING. ALL EQUIPMENT SHALL BE MARKED IN ACCORDANCE WITH NEC (OR CEC–WHERE ADOPTED) REQUIREMENTS. SEE SPECIFICATIONS FOR MORE INFORMATION. WHERE SERIES RATINGS ARE ALLOWED, THE EQUIPMENT SHALL BE LEGIBLY MARKED IN THE FIELD TO INDICATE A SERIES COMBINATION RATING WHICH SHALL BE READILY VISIBLE AND STATE THE FOLLOWING:

   **CAUTION – SERIES COMBINATION SYSTEM RATED AT ??,???
   AMPERES. USE ONLY IDENTIFIED REPLACEMENT COMPONENTS
   IN THIS SYSTEM.**

   WHERE ??,??? REPRESENTS AVAILABLE FAULT CURRENT. SEE SPECIFICATIONS FOR PLACARD REQUIREMENTS.
5. ALL TERMINATIONS AND ENCLOSURES SHALL BE RATED FOR USE WITH 75 DEGREE CELSIUS CONDUCTORS.
6. ALL SERVICE ENTRANCE EQUIPMENT RATED AT 400A OR GREATER SHALL BE PROVIDED WITH A BACKFEED–RATED, SOLID STATE MAIN OVERCURRENT DEVICE AND BUSSING RATED AT 100% OPERATION (1000A/sq.in. FOR CU, 750A/sq.in. FOR AL). NO HEAT RISE RATED BUSSING ALLOWED. NON–SERVICE ENTRANCE SWITCHBOARDS AND DISTRIBUTION BOARDS LARGER THAN 600A SHALL BE PROVIDED WITH BUSSING RATED FOR 100% OPERATION – SEE SPECIFICATION FOR CIRCUIT BREAKER REQUIREMENTS. ALL NON–SERVICE ENTRANCE SWITCHBOARDS AND DISTRIBUTION BOARD MAIN OVERCURRENT DEVICES SHALL BE BACKFEED–RATED. BACKFEED RATINGS SHALL COMPLY WITH NEC, OR CEC WHERE ADOPTED, **710.15 (E) AND 705.12(B)(4).** SEE SPECIFICATIONS FOR ADDITIONAL REQUIREMENTS REGARDING CIRCUIT BREAKERS.
7. PROVIDE CIRCUIT BREAKER ARC ENERGY REDUCTION MAINTENANCE SWITCHING PER NEC, OR CEC WHERE ADPOPTED, **240.87(B)(3)** FOR ANY CIRCUIT BREAKER, 1200A FRAME AND LARGER. SEE SPECIFICATIONS FOR ADDITIONAL REQUIREMENTS.
8. ALL SWITCHBOARDS AND DISTRIBUTION BOARDS SHALL HAVE:
   a. **TIN–PLATED ALUMINUM** BUSSING WITH RECTANGULAR CROSS SECTION. HORIZONTAL AND VERTICAL BUSSING SHALL BE FULL LENGTH AND SHALL HAVE PROVISIONS FOR FUTURE EXTENSIONS. ALL BUSSING SHALL HAVE MINIMUM WITHSTAND RATING EQUAL TO THE AVAILABLE FAULT CURRENT INDICATED. ALL VERTICAL AND HORIZONTAL BUSSING SHALL BE RATED AT FULL CAPACITY IN ALL SWITCHBOARD AND DISTRIBUTION BOARD SECTIONS. PROVIDE 100% NEUTRAL BUSSING MINIMUM UNLESS OTHERWISE NOTED. PROVIDE FULL LENGTH GROUND BUS AND, WHERE INDICATED ON PLANS, ISOLATED GROUND BUSSING. PROVIDE REAR WIRE WAY IN ALL SWITCHBOARD SECTIONS.
   b. LUGS SUITABLE FOR USE WITH COPPER OR ALUMINUM CONDUCTORS LISTED FOR USE WITH 75 DEGREE CELSIUS AMPACITY CONDUCTORS.
   c. PERMANENT PLACARD(S) MARKED PER THE SPECIFICATIONS AND PER NEC (OR CEC–WHERE ADOPTED) SECTIONS **225.37, 230.2(E), 690.56, 692.56, 700.7, 701.7, 702.7,** AND **705.10** AND IFC (OR CFC – WHERE ADOPTED) SECTION **608.2.6.1**. DENOTING THE PRESENCE OF ADDITIONAL SERVICES, PHOTOVOLTAIC SYSTEMS, FUEL CELLS, EMERGENCY, STATIONARY BATTERY STORAGE SYSTEMS, OR STAND–BY POWER SOURCES AS APPLICABLE.
9. CONTRACTOR SHALL SUBMIT SWITCHBOARD SHOP DRAWINGS TO THE SERVING UTILITY FOR APPROVAL PRIOR TO FABRICATION. CONTRACTOR SHALL SECURE CONFIRMATION THAT THE PROPOSED SWITCHBOARD COMPLIES WITH ELECTRIC UTILITY COMPANY REGULATIONS.
10. CONTRACTOR SHALL SUBMIT SHOP DRAWINGS PER THE SPECIFICATIONS FOR SWITCHBOARDS, DISTRIBUTION BOARDS, TRANSFORMERS, PANEL BOARDS, AND ALL OTHER DEVICES SHOWN ON THE SINGLE LINE, PRIOR TO FABRICATION.
11. ALLOWABLE DIMENSIONS IN MAIN ELECTRICAL ROOM ARE A CRITICAL COORDINATION ITEM. CONTRACTOR SHALL PROVIDE 1/4"= 1'–0" SCALE DRAWINGS WITH SWITCHGEAR SUBMITTALS SHOWING THAT ALL PROPOSED EQUIPMENT WILL FIT IN THE SPACE PROVIDED. SUBMITTALS WITHOUT THIS DRAWING SHALL BE REJECTED AS INCOMPLETE.
12. UNLESS SPECIFICALLY SHOWN AS (E), (R), (ER), (D), EXISTING OR NON–BOLD, ALL ELECTRICAL DEVICES SHOWN ARE NEW.
13. WHERE REQUIRED BY THE LOCAL AUTHORITY HAVING JURISDICTION OR WHERE A NEW GROUND FAULT PROTECTIVE DEVICE IS BEING INSTALLED, A GROUND FAULT SYSTEM TEST SHALL BE CONDUCTED BY AN INDEPENDENT TESTING AGENCY PER NEC (OR CEC–WHERE ADOPTED) **230.95(C)**. THE GROUND FAULT SYSTEM TEST SHALL BE PERFORMED IN THE PRESENCE OF THE LOCAL AUTHORITY HAVING JURISDICTION. VERIFICATION OF DEVICE SETTINGS PER THE POWER SYSTEMS STUDY SPECIFICATION SHALL BE PERFORMED BY THE SAME INDEPENDENT TESTING AGENCY. THE GROUND FAULT TEST RESULTS SHALL BE DELIVERED TO THE ENGINEER OF RECORD. DURING THE CONSTRUCTION PHASE OF THE PROJECT, ALL NEW GROUND FAULT RELAYS SHALL BE SET AT THE LOWEST AVAILABLE TIME DELAY AND PICK–UP SETTINGS.
14. SEE POWER SYSTEMS STUDY SPECIFICATION FOR ADDITIONAL REQUIREMENTS. ALL REQUIRED POWER SYSTEMS STUDIES MUST BE COMPLETED AND SUBMITTED WITH ELECTRICAL POWER DISTRIBUTION EQUIPMENT SUBMITTAL. FAILURE TO DO SO WILL PREVENT THE ENGINEER FROM EFFECTIVELY EVALUATING THE SUBMITTAL AND SHALL RESULT IN REJECTION OF THE ELECTRICAL POWER DISTRIBUTION EQUIPMENT SUBMITTAL AS INCOMPLETE.

SPECIFIC SINGLE LINE NOTES:

(1) PROVIDE NEW OVERCURRENT PROTECTIVE DEVICE COMPATIBLE WITH EXISTING SWITCHBOARD. PROVIDE AIC RATING OF NEW DEVICE TO MATCH EXISTING RATING.

VOLTAGE DROP WORKSHEET: REFERENCE ONLY

1. ALL BRANCH CIRCUITS ARE DESIGNED TO LIMIT VOLTAGE DROP 3% OR LESS USING THE FOLLOWING CRITERIA:

277 VOLT, 1 PHASE LOAD:

LOAD (VA)	DISTANCE	CU CONDUCTOR SIZE
0–4432 VA 0–16 AMPS	0–158 FT	#12
	159–250 FT	#10
	251–397 FT	#8

480 VOLT, 3 PHASE LOAD:

LOAD (VA)	DISTANCE	CU CONDUCTOR SIZE
0–13,296 VA (4,432 PER PHASE) 0–16 AMPS	0–45 FT	#12
	46–72 FT	#10
	73–114 FT	#8
13,297–19,994 VA (6,648 PER PHASE) 16–24 AMPS	0–30 FT	#12
	31–48 FT	#10
	49–76 FT	#8

208 VOLT, 1 PHASE LOAD:

LOAD (VA)	DISTANCE	CU CONDUCTOR SIZE
0–1000 VA (500 PER PHASE) 0–4.8 AMPS	0–225 FT	#12
	226–360 FT	#10
	361–572 FT	#8
1001–2000 VA (1,000 PER PHASE) 4.8–9.6 AMPS	0–151 FT	#12
	152–240 FT	#10
	241–380 FT	#8
	381–604 FT	#6
2001–3,328 VA (1,664 PER PHASE) 9.6–16 AMPS	0–78 FT	#12
	79–125 FT	#10
	126–198 FT	#8
3329–4,992 VA (2,496 PER PHASE) 16–24 AMPS	0–52 FT	#12
	53–83 FT	#10
	84–132 FT	#8

120 VOLT, 1 PHASE LOAD:

LOAD (VA)	DISTANCE	CU CONDUCTOR SIZE
0–1000 VA 0–8 AMPS	0–130 FT	#12
	131–205 FT	#10
	205–330 FT	#8
1001–1500 VA 8–12.5 AMPS	0–87 FT	#12
	88–138 FT	#10
	139–219 FT	#8
	220–350 FT	#6
1501–1920 VA 12.5–16 AMPS	0–68 FT	#12
	69–108 FT	#10
	109–172 FT	#8
	173–273 FT	#6
1921–2880 VA 16–24 AMPS	0–72 FT	#10
	73–114 FT	#8
	115–182 FT	#6

ANY 3 PHASE LOADS GREATER THAN 30 AMPS ARE SHOWN ON THE FEEDER SCHEDULE OR MOTORIZED EQUIPMENT SCHEDULE WITH ASSOCIATED VOLTAGE DROP LIMITED TO 2% OR LESS.

WIRE SIZE TABLE CHART

SCALE: N.T.S.

2

FEEDER SCHEDULE

FEEDER	CONDUIT AND CONDUCTORS	LOAD	DISTANCE	V.D. (%)	A.I.C.	NOTES
WP–1	(2)[4"C – 4–500MCM, #1/0G] –	(320)	450'	2.68	<10K	TO PANEL PHL1 –
FP1–1	3"C. – 4#4/0, #2GRD –	(160)	40'	0.34	<10K	TO PANEL SP (SEE PANEL SCHEDULE)
FP1–2	3"C. – 4#4/0, #2GRD –	(160)	20'	0.17	<10K	TO PANEL P2 (SEE PANEL SCHEDULE)
FP1–2A	1"C. – 3#10, 1#10GRD. –	(14.4)	20'	0.36	<10K	TO INVERTER INVP (SEE PANEL SCHEDULE)
–	– –	–	–	–	–	– –

GENERAL FEEDER SCHEDULE NOTES:

1. ALL FEEDERS SHOWN, UNLESS SPECIFICALLY NOTED OTHERWISE, ARE PRESUMED TO BE ROUTED IN METAL RACEWAYS. IF P.V.C. CONDUITS ARE UTILIZED, THE CONTRACTOR SHALL PROVIDE AN EQUIPMENT GROUND PER NEC, OR CEC WHERE ADOPTED, **TABLE 250.122** OR, WHERE REQUIRED, PROVIDE A MAIN BONDING JUMPER PER **TABLE 250.66** AND INCREASE THE CONDUIT SIZE ACCORDINGLY.
2. LOADS INDICATED WITH " ( ) " REPRESENT WORST CASE LOAD IN AMPS.
3. DISTANCE SHOWN IS FOR DESIGN PURPOSES ONLY. IT IS NOT A MATERIAL TAKEOFF.
4. VOLTAGE DROP VALUE INDICATED IS AT THE END OF THE FEEDER.
5. AVAILABLE FAULT CURRENT VALUE AT THE END OF THE FEEDER INDICATED. CALCULATIONS ARE BASED UPON INITIAL VALUES RECEIVED FROM THE SERVING UTILITY AND THE LENGTH AND IMPEDANCE OF THE FEEDER. THE SHORT CIRCUIT CURRENT RATING, EQUIPMENT BUS BRACING, AND/OR AMP INTERRUPTING CURRENT OF EQUIPMENT CONNECTED ON THE LOAD SIDE OF THE FEEDER SHALL BE GREATER THAN THE AVAILABLE FAULT CURRENT.

IDENTIFICATION STAMP
DIV. OF THE STATE ARCHITECT
APP: 03-122664 INC:
REVIEWED FOR
SS ☑ FLS ☑ ACS ☑
DATE: 05/12/2023

pjhm architects
LICENSED ARCHITECT
RICHARD W. SIMPSON
NO. C15585
REN. 02/25
STATE OF CALIFORNIA
tk|sc COLLABORATIVE
11870 Pierce Street, Suite 160
Riverside, California 92505
951.299.4160 www.tksc.com
Project Leader - Nikolas Bruno
Electrical Lead - Nikolas Bruno
tk1sc Job #: B2202744.000
REGISTERED PROFESSIONAL ENGINEER
RICHARD W. SIMPSON
NO. E15610
EXP. 12/31/2024
ELECTRICAL
STATE OF CALIFORNIA

HIGHLAND HIGH SCHOOL
50M POOL & AQUATICS CENTER
KERN HIGH SCHOOL DISTRICT

SINGLE LINE DIAGRAM
E–6.0

OC Office: 24461 Ridge Route Drive #100, Laguna Hills, CA • 92653 Phone: 949.496.6166 SD Office: 804 Pier View Way #103, Oceanside, CA • 92054 Phone: 760.730.5527 LA Office: 837 Traction Avenue, #410, Los Angeles, CA • 90013 Phone: 213.278.0112 Web: pjhm.com

8/2/2022 11:34:37 AM

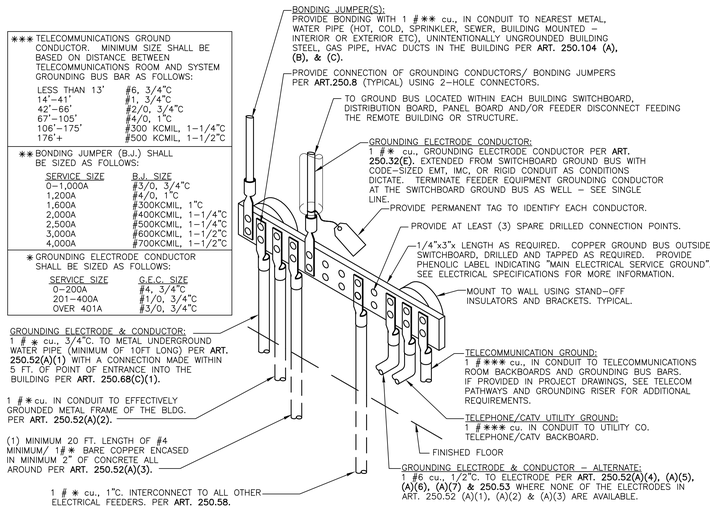

THIS DETAIL APPLIES TO BUILDINGS OR STRUCTURES SUPPLIED BY FEEDERS OR BRANCH CIRCUITS GOVERNED BY ART. 250.32 AND SPECIFICALLY BY ART. 250.32(B)(1) WHERE THE GROUNDED CONDUCTOR IS NOT CONNECTED TO THE GEC IN THE SUPPLIED BUILDING DUE TO THE POSSIBILITY OF PARALLEL CIRCUIT PATHS FOR NEUTRAL CURRENT. WHERE THE STUCTURE OR BUILDING SUPPLIED IS EXISTING, CONTRACTOR SHALL MAKE EVERY EFFORT TO EXTEND/RECONNECT EXISTING GROUNDING ELECTRODE(S)/SYSTEM.

FEEDER TO REMOTE BUILDING / STRUCTURE GROUNDING DETAIL (A)

SCALE: NTS

POWER SYSTEMS STUDY SPECIFICATIONS:

THE CONTRACTOR SHALL PROVIDE, WITH THE ASSISTANCE OF THE SWITCHGEAR MANUFACTURER, POWER SYSTEMS STUDIES CONSISTING OF A SHORT CIRCUIT STUDY, A COORDINATION STUDY, AND AN ARC FLASH STUDY – ALL PER LATEST PUBLISHED EDITIONS OF THE FOLLOWING STANDARDS: ANSI C37, IEEE 141, IEEE 242, IEEE 399 – BROWN BOOK, NFPA 70E AND IEEE STD 1584/1584a. ADDITIONALLY:

a. CONTRACTOR SHALL PERFORM STUDY USING SKM "SYSTEMS ANALYSIS POWER TOOLS FOR WINDOWS" COMPUTER SOFTWARE PROGRAM – LATEST AVAILABLE VERSION OR EQUAL BY ETAP.

b. CONTRACTOR SHALL FURNISH/OBTAIN ALL DATA REQUIRED FOR POWER SYSTEMS STUDIES. DATA COLLECTION EFFORT SHALL BE PERFORMED IN AN EXPEDITIOUS MANNER AND AS SOON AS POSSIBLE AFTER CONTRACT AWARD TO ENSURE STUDY COMPLETION FOR SUBMISSION AS PART OF THE ELECTRICAL DISTRIBUTION EQUIPMENT SHOP DRAWINGS AND SUBMITTALS. DATA COLLECTION EFFORTS MAY INCLUDE, BUT ARE NOT LIMITED TO, CALCULATED UTILITY COMPANY FAULT VALUES, SERVICE TRANSFORMER PRIMARY PROTECTIVE DEVICE AND APPLIED VOLTAGE, ELECTRICAL CHARACTERISTICS AND FAULT CONTRIBUTION FROM EXISTING MOTORS/GENERATORS, EXISTING CONDUCTOR QUANTITIES, SIZE AND LENGTHS, EXISTING/ NEW OVERCURRENT PROTECTIVE DEVICE SPECIFICATIONS AND PART NUMBERS, TRANSFER SWITCH CHARACTERISTICS AND SHORT CIRCUIT CURRENT RATINGS IN ADDITION TO ANY OTHER DATA REQUIRED TO PERFORM COMPREHENSIVE POWER SYSTEM STUDIES. RANGES OF FAULT CURRENT VALUES OR GENERIC FAULT CURRENT VALUES PROVIDED BY THE UTILITY COMPANY ARE UNACCEPTABLE AS ARE ANY FAULT CURRENT VALUES SHOWN ON THE SINGLE LINE DIAGRAM OR FEEDER SCHEDULE.

DATA GATHERING SHALL BE CONDUCTED IN A SAFE MANNER WITH 1) EQUIPMENT COMPLETELY DE-ENGERIZED IN COORDINATION WITH THE OWNER DURING A SCHEDULED POWER SHUTDOWN OR 2) UTILIZING A LICENSED ELECTRICIAN WEARING APPROPRIATE PERSONNEL PROTECTIVE EQUIPMENT PER NFPA 70E STANDARDS.

CONTRACTOR IS SOLELY RESPONSIBLE FOR OBTAINING UTILITY DATA FROM THE UTILITY COMPANY – INCLUDE ALL COSTS IN BASE BID FOR ANY UTILITY COMPANY FEES FOR PROVIDING NECESSARY DATA. WHERE THE PROJECT IS LOCATED ON A CAMPUS WITH AN OWNER-FURNISHED ELECTRICAL DISTRIBUTION SYSTEM, CONTRACTOR SHALL BE RESPONSIBLE TO OBTAIN SUFFICIENT ELECTRICAL SYSTEM DATA TO DEMONSTRATE COORDINATION OF THE PROJECT'S ELECTRICAL SYSTEM WITH CAMPUS DISTRIBUTION SYSTEM. THIS DATA MAY BE AVAILABLE IN THE FORM OF AN OWNER-PROVIDED CAMPUS POWER SYSTEM STUDY. WHERE SUCH STUDIES ARE NOT AVAILABLE, THE CONTRACTOR SHALL INCLUDE ALL COSTS IN BASE BID TO PERFORM NECESSARY FIELD INVESTIGATION OF CAMPUS DISTRIBUTION SYSTEM INCLUDING CAMPUS SERVICE ENTRANCE AND SERVING UTILITY DATA AS REQUIRED TO DEMONSTRATE COORDINATION OF THE PROJECT'S ELECTRICAL SYSTEM WITH CAMPUS DISTRIBUTION SYSTEM. INCLUDE ALL COSTS FOR RECOMMENDING ADJUSTMENTS TO EXISTING CAMPUS DISTRIBUTION SYSTEM SETTINGS DISCOVERED TO BE INCORRECT. OWNER SHALL BE RESPONSIBLE TO UNDERTAKE ANY PHYSICAL ADJUSTMENTS TO EXISTING MEDIUM OR HIGH VOLTAGE DISTRIBUTION EQUIPMENT WITH THE EXCEPTION OF FUSES, RELAYS OR OTHER CIRCUIT PROTECTIVE DEVICES LOCATED IN EXISTING DISTRIBUTION EQUIPMENT THAT ARE DEDICATED TO SERVE ONLY THIS PROJECT'S ELECTRICAL SYSTEM.

CONTRACTOR IS SOLELY RESPONSIBLE FOR OBTAINING EQUIPMENT SCCR RATING FROM ALL OTHER PROJECT TRADES AND FOR ANY OWNER-FURNISHED OR TENANT-FURNISHED EQUIPMENT CONNECTED TO THE ELECTRICAL SYSTEM IN ORDER TO VALIDATE AVAILABLE FAULT CURRENT AT THE EQUIPMENT CONNECTIONS IS LESS THAN THE RESPECTIVE EQUIPMENT SCCR.

c. THE SHORT CIRCUIT STUDY SHALL INCLUDE CALCULATED SHORT-CIRCUIT MOMENTARY AND INTERRUPTING DUTIES FOR 3-PHASE BOLTED FAULTS AND LINE-TO-GROUND FAULTS THROUGHOUT THE SINGLE LINE TO INCLUDE UTILITY SERVICE SUPPLY, GENERATORS AND TRANSFER SWITCHES, SUBSTATIONS, SWITCHGEAR, PANEL BOARDS ETC. STUDY SHALL EVALUATE ALL ELECTRICAL DISTRIBUTION EQUIPMENT AND PROTECTIVE DEVICES AGAINST SHORT CIRCUIT CURRENT RATINGS. THIS STUDY EFFORT SHALL EXTEND TO SCCR RATINGS OF EQUIPMENT, EQUIPMENT CONTROL PANELS, VARIABLE FREQUENCY DRIVES ETC PROVIDED BY OTHER TRADES THAT ARE CONNECTED TO THE ELECTRICAL SYSTEM. NOTE ANY EXISTING CIRCUIT PROTECTIVE DEVICES(S)/ ELECTRICAL DISTRIBUTION THAT IS INADEQUATELY RATED TO WITHSTAND CALCULATED FAULT VALUES OR WHERE EQUIPMENT SCCR IS EXCEEDED. WHERE THE UTILITY COMPANY PROVIDES MULTIPLE FAULT CURRENT VALUES REFLECTING INITIAL TRANSFORMER CAPACITY AND WORST CASE TRANSFORMER CAPACITY, THE CONTRACTOR SHALL PROVIDE SHORT CIRCUIT ANALYSIS PRIMARILY BASED ON WORST CASE TRANSFORMER CAPACITY. ALL SERVICE EQUIPMENT SHALL BE LABELED WITH THE MAXIMUM AVAILABLE FAULT CURRENT AND FAULT CURRENT CALCULATION DATE PER CEC **110.24**. SEE LABELING SPECIFICATION FOR ADDITIONAL REQUIREMENTS.

d. THE COORDINATION STUDY SHALL INCLUDE TIME-CURRENT CURVES (TCC) FOR OVER CURRENT PROTECTIVE DEVICES (OCPDs) ALONG WITH TRANSFORMER FULL-LOAD CURRENT, INRUSH CURRENT, AND THROUGH-FAULT PROTECTION CURVES, CONDUCTOR DAMAGE CURVES, GROUND FAULT PROTECTIVE DEVICE CURVES, MOTOR STARTING CURVE(S)/DAMAGE POINT(S), GENERATOR SHORT-CIRCUIT CURVE(S) /DAMAGE POINT(S) ETC. – CLEARLY IDENTIFIED AND PLOTTED ON LOG-LOG SCALE GRAPH(S). TCC GRAPH(S) SHALL INCLUDE A ONE-LINE DIAGRAM IDENTIFYING THE SPECIFIC PORTION COVERED BY THE GRAPH. DEMONSTRATE THAT ADEQUATE CLEARING TIME/SELECTIVE OPERATION EXISTS BETWEEN PROTECTIVE DEVICES WHILE PROVIDING PROPER SYSTEM PROTECTION & COORDINATION. STUDY SHALL INCLUDE ALL MAIN AND FEEDER OCPDs INCLUDING SECONDARY SIDE OF EACH TRANSFORMER DOWN TO BREAKERS IN PANEL BOARDS AND INDIVIDUAL BREAKERS IN DISTRIBUTION BOARDS. IN ALL CASES, SOLID STATE AND/OR ADJUSTABLE OCPDs SHALL BE ANALYZED WITH UPSTREAM AND DOWNSTREAM OCPDs AS REQUIRED TO ESTABLISH PROPER COORDINATION SETTINGS. SPECIAL EMPHASIS SHALL BE PLACED ON ANALYZING PORTIONS OF THE ELECTRICAL SYSTEM REQUIRING SELECTIVE COORDINATION WHICH INCLUDE, BUT ARE NOT LIMITED TO, CEC **ARTICLES 517, 620, 700, 701 & 708**; ALONG WITH ANY **ARTICLE 702** OPTIONAL STANDBY SYSTEMS SERVING SERVER ROOMS/DATA CENTERS OR OTHER AREAS REQUIRING HIGH AVAILABILITY/PROPER COORDINATION SUCH AS MANUFACTURING, CLEAN ROOM OR LAB FACILITIES. CONTRACTOR SHALL BE RESPONSIBLE TO RECOMMEND SETTINGS OF ALL DEVICES, TO INCLUDE GROUND FAULT SETTINGS, TO ACHIEVE SYSTEM COORDINATION. THE CONTRACTOR SHALL FIELD ADJUST NEW AND EXISTING DEVICES ACCORDINGLY UTILIZING A QUALIFIED MANUFACTURER'S REPRESENTATIVE OR A THIRD-PARTY ELECTRICAL TESTING AGENCY.

e. THE ARC FLASH ANALYSIS SHALL BE BASED ON THE INCIDENT ENERGY ANALYSIS METHOD (NFPA 70E 130.5). THE ARC FLASH ANALYSIS SHALL DETERMINE THE FLASH BOUNDARY, THE WORKING DISTANCE, THE INCIDENT ENERGY AND MINIMUM ARC RATING OF CLOTHING(CAL/CM²) AT LOCATIONS IN THE ELECTRICAL SYSTEM WHERE WORK CAN OR MIGHT BE PERFORMED ON ENERGIZED COMPONENTS WHERE MULTIPLE SYSTEM CONFIGURATION SCENARIOS ARE POSSIBLE, THE CONFIGURATION WITH GREATEST INCIDENT ENERGY MUST BE SHOWN. DECREMENT FAULT CONTRIBUTIONS FROM MOTOR(S) AND GENERATOR(S) BASED ON INDUSTRY STANDARDS. THE CONTRACTOR SHALL MAKE RECOMMENDATIONS WITH REGARD TO SYSTEM ADJUSTMENTS OR OTHER MITIGATION MEASURES TO OPTIMIZE THE RESULTS OF THE STUDY AS IT RELATES TO SAFE AND RELIABLE ELECTRICAL SYSTEM OPERATION (E.G. OVERCURRENT DEVICE SETTINGS, WORKING DISTANCES, CURRENT LIMITING DEVICES). THIS INCLUDES MITIGATION, WHERE POSSIBLE, OF INCIDENT ENERGY LEVELS THAT EXCEED 40 CAL/CM². PERFORM ITERATIVE CALCULATIONS TO DEMONSTRATE EFFECTS OF OPENING PROTECTIVE DEVICES UTILIZING A VARIETY OF DIFFERENT SETTINGS TO BEST MITIGATE ARC FLASH ENERGY WHILE MAINTAINING AN ACCEPTABLE LEVEL OF SYSTEM COORDINATION. WHERE SUCH RECOMMENDATIONS COMPROMISE SELECTIVE COORDINATION SETTINGS, SO STATE IN THE ANALYSIS.
INCLUDE INCIDENT ENERGY/FLASH PROTECTION BOUNDARY CALCULATIONS FOR BOTH LINE/LOAD SIDE OF ALL SEPARATELY ENCLOSED MAIN CIRCUIT BREAKERS. ALL CALCULATIONS SHALL BE BASED ON ACTUAL OVERCURRENT DEVICE CLEARING TIMES.

f. BASED ON THE RESULTS OF THE ARC FLASH ANALYSIS, THE CONTRACTOR SHALL PRODUCE AND INSTALL A WARNING LABEL (ORANGE <40 CAL/CM2) OR DANGER LABEL (RED > 40 CAL/CM2) FOR EACH PIECE OF EQUIPMENT PER CEC **110.16** AND IN ACCORDANCE WITH ANSI Z535.4-2007 OR LATEST PUBLISHED EDITION. THE LABEL MUST BE READABLE IN BOTH INDOOR AND OUTDOOR ENVIRONMENTS FOR AT LEAST 3 YEARS AND CONTAIN THE FOLLOWING INFORMATION: NOMINAL SYSTEM VOLTAGE, ARC HAZARD BOUNDARY (INCHES), WORKING DISTANCE (INCHES), AVAILABLE ARC FLASH INCIDENT ENERGY AT THE WORKING DISTANCE (CAL/CM²), MINIMUM ARC RATING OF CLOTHING, EQUIPMENT/BUS NAME, DATE PREPARED, SUPPLIER'S NAME AND ADDRESS. PROVIDE LABEL AS MANUFACTURED BY BRADY OR EQUAL. PRIOR TO PLACING ARC FLASH LABELS, CONTRACTOR SHALL SET ALL PROTECTIVE DEVICE SETTINGS PER THE APPROVED COORDINATION STUDY.

g. DURING THE CONSTRUCTION PHASE OF THE PROJECT, ALL GROUND FAULT RELAYS SHALL BE SET AT THE LOWEST AVAILABLE TIME DELAY AND PICK-UP SETTINGS.

h. POWER SYSTEMS STUDIES SHALL BE SUBMITTED AS PART OF THE OVERALL SWITCHGEAR SUBMITTAL. THE RESULTS OF THE POWER SYSTEMS STUDY SHALL BE PRESENTED IN A COMPREHENSIVE REPORT THAT INCLUDES:

- REPORT SUMMARY WITH ANALYSIS METHODOLOGY, FINDINGS AND RECOMMENDATIONS
- SUMMARY OF INPUT DATA FOR UTILITY SOURCE, EQUIPMENT AND CABLES
- AVAILABLE FAULT CURRENT AT EACH EQUIPMENT LOCATION WITH COMPARISON TO EQUIPMENT RATING
- OVERCURRENT DEVICE SETTINGS (E.G. PICK-UP, TIME DELAY, CURVE), "AS FOUND" AND "AS RECOMMENDED"
- OVERCURRENT DEVICE COORDINATION CURVES INCLUDING RELATED SECTION OF THE SINGLE-LINE DIAGRAM
- COMPLETE SYSTEM SINGLE-LINE DIAGRAM FOR THE SYSTEM ANALYZED
- INCIDENT ENERGY LEVEL (CAL/CM²) FOR EACH EQUIPMENT LOCATION, RECOMMENDED PPE AND SAMPLE ARC FLASH WARNING LABELS
- A DVD OR CD CONTAINING ELECTRONIC PROJECT FILES USED TO DEVELOP THE STUDY TO INCLUDE SKM OR ETAP PROJECT AND REFERENCE LIBRARY FILES. ALL FILES SHALL BE AVAILABLE FOR REVIEW AND/OR FUTURE MODIFICATION WITHOUT LIMITATION. LOCKING OR SECURING FILES BY OTHER MEANS IS NOT ACCEPTABLE. FAILURE TO SUBMIT COMPLETE STUDIES AND FULLY ACCESSIBLE FILES SHALL RESULT IN THE REJECTION OF THE ENTIRE SWITCHGEAR SUBMITTAL.

i. AS A PART OF A CLOSEOUT SUBMITTAL TO BE SUBMITTED TO THE ENGINEER PRIOR TO FINAL PROJECT CONSTRUCTION OBSERVATIONS, CONTRACTOR SHALL PROVIDE PHOTOS OF ALL ADJUSTABLE CIRCUIT BREAKERS DEPICTING THEIR FINAL SETTINGS BASED ON THE POWER SYSTEMS STUDY. SUBMITTAL SHALL BE ORGANIZED WITH OCPD IDENTIFICATION, OCPD PHOTO IMAGE AND RESPECTIVE POWER SYSTEM STUDY OCPD SETTING REQUIREMENTS TO ALLOW EFFICIENT CONFIRMATION OF RECORD SETTINGS. PLEASE NOTE THAT IMAGES MAY NEED TO BE TAKEN PRIOR TO INSTALLATION OF EQUIPMENT COVERS/EQUIPMENT ENERGIZATION SINCE OCPD SETTINGS MAY BE OBSTRUCTED BY EQUIPMENT COVERS.

j. THE STUDY SHALL INCLUDE ALL PORTIONS OF ELECTRICAL SINGLE LINE DIAGRAM TO INCLUDE UPSTREAM OR DOWNSTREAM ELEMENTS THAT MAY NOT BE SHOWN INCLUDING, BUT NOT LIMITED TO, UTILITY SOURCE CONTRIBUTION, RELEVANT PORTIONS OF THE EXISTING ELECTRICAL DISTRIBUTION SYSTEM WITHIN A BUILDING AND/OR CAMPUS ELECTRICAL DISTRIBUTION SYSTEMS AS DESCRIBED ABOVE.

IDENTIFICATION STAMP
DIV. OF THE STATE ARCHITECT
APP: 03-122664 INC:
REVIEWED FOR
SS ☑ FLS ☑ ACS ☑
DATE: 05/12/2023

pjhm architects
213.278.0172 Phone: 760.730.5527 LA Office: 837 Traction Avenue, #410, Los Angeles, CA 90013
pjhm.com Web:
LICENSED ARCHITECT RICHARD W. SIBBETT NO. C15585 REN. 02/25 STATE OF CALIFORNIA
tk|sc COLLABORATIVE
11870 Pierce Street, Suite 160
Riverside, California 92505
951.299.4160 www.tk1sc.com
Project Leader - Nikolas Bruno
Electrical Lead - Nikolas Bruno
tk1sc Job #: B2202744.000
REGISTERED PROFESSIONAL ENGINEER RICHARD W. SIBBETT No. E15610 12/31/2024 ELECTRICAL STATE OF CALIFORNIA

HIGHLAND HIGH SCHOOL
50M POOL & AQUATICS CENTER
KERN HIGH SCHOOL DISTRICT

POWER SYSTEM STUDY AND GROUNDING
E-6.1

OC Office: 24461 Ridge Route Drive #100, Laguna Hills, CA 92653 Phone: 949.496.6191 SD Office: 804 Pier View Way #103, Oceanside, CA 92054 Phone: 760.730.5527

8/2/2022 11:34:37 AM

PANEL P2

MOUNTING: SURFACE | DOUBLE LUG: NO | VOLTS: 120/208 | MAIN: M.L.O.
NEMA 3R: NO | 200% NEUTRAL: NO | PHASE: 3 | BUS: 225A
FEED THRU: NO | I/G BUS: NO | WIRE: 4 | A.I.C.: 10,000

NOTES	LOCATION	A	B	C	LTG	CONV	KIT	RECP	MISC	BKR	CIRC		CIRC	BKR	MISC	RECP	KIT	CONV	LTG	A	B	C	LOCATION	NOTES
	POOL BLDG A RECEPT	1080						6		20/1	1		2	20/1						705			POOL BLDG A LTG.	
	POOL BLDG A RECEPT		1080					6		20/1	3		4	20/1							563		EXTERIOR POOL A LTG.	
	POOL BLDG A RECEPT			540				3		20/1	5		6	40/1								3560	MUSCO LTG 'P1'	
	AV RACK	1000						4		20/1	7		8	40/1						3560			MUSCO LTG 'P2'	
	HAND DRYER		1000							20/1	9		10	15/1							670		EF-A1	
	HAND DRYER			1000						20/1	11		12	15/1								670	EF-A2	
	IDF RACK	1000								20/1	13		14	15/1						670			EF-A3	
	WATER FOUNTAIN		1000							20/1	15		16	40/3							3103		AC-A1 W/1 HP PE	
	ROOF RECEPT			540						20/1	17		18	--								3103	----	
	EXT PEDESTAL REC	3000								30/1	19		20	--						4179			----	
	EXT PEDESTAL REC		3000							30/1	21		22	20/1							500		EXT. PED. RECEPT	
	SCOREBOARD			500						20/1	23		24	20/1								500	EXT. PED. RECEPT	
	SCOREBOARD	500								20/1	25		26	20/1						500			STORAGE YARD	
AE	VECP		500							20/1	27		28	20/1							500		STORAGE YARD	
AE	AMP-A			500						20/1	29		30	20/1								500	STORAGE YARD	
	SPARE									20/1	31		32	20/1									SPARE	
	SPARE									20/1	33		34	20/1									SPARE	
	SPARE									20/1	35		36	20/1									SPARE	
	SPACE										37		38										SPACE	
	SPACE										39		40										SPACE	
	SPACE										41		42										SPACE	

A= 16194 VA | B= 11916 VA | C= 11413 VA
PHASE A LCL= 0 VA | PHASE B LCL= 0 VA | PHASE C LCL= 0 VA
PHASE A W/LCL= 16194 VA | PHASE B W/LCL= 11916 VA | PHASE C W/LCL= 11413 VA
TOTAL VA= 39523 | TOTAL LCL= 0 | TOTAL VA W/LCL= 39523
AMPS= **110** | HIGH PHASE AMPS= **135**

PANEL P1

MOUNTING: SURFACE | DOUBLE LUG: NO | VOLTS: 120/208 | MAIN: 400A M.C.B
NEMA 3R: NO | 200% NEUTRAL: NO | PHASE: 3 | BUS: 400A
FEED THRU: NO | I/G BUS: NO | WIRE: 4 | A.I.C.: 10,000

NOTES	LOCATION	A	B	C	LTG	CONV	KIT	RECP	MISC	BKR	CIRC		CIRC	BKR	MISC	RECP	KIT	CONV	LTG	A	B	C	LOCATION	NOTES
	POOL BLDG B RECEPT	1080						6		20/1	1		2	20/1						335			POOL BLDG B LTG.	
	POOL BLDG B RECEPT		1080					6		20/1	3		4	20/1							1541		EXTERIOR POOL BLDG B	
	POOL BLDG B RECEPT			720				4		20/1	5		6	40/1								3560	MUSCO LTG P3'	
	POOL BLDG B RECEPT	900						5		20/1	7		8	40/1						3560			MUSCO LTG P4'	
	POOL BLDG B RECEPT		720					4		20/1	9		10	15/1							670		EF-B1	
	POOL BLDG B EXT REC			540				3		20/1	11		12	15/1								670	EF-B2	
	HAND DRYER	1000								20/1	13		14	30/2						1581			HP-B1	
	HAND DRYER		1000							20/1	15		16	--							1581		----	
	HAND DRYER			1000						20/1	17		18	40/3						-		2719	AC-B1 W/1 HP PE	
	HAND DRYER	1000								20/1	19		20	--						-	2719		----	
	IDF RACK		1000							20/1	21		22	--						-		3103	----	
	AV RACK			1000						20/1	23		24	20/1								180	ROOF RECEPT	
	CEILING FANS	600								20/1	25		26	20/1						500			FAPS-B	AE
	WATER FOUNTAIN		500							20/1	27		28	20/1							500		AMP-B	AE
	EWH-1			2300						30/2	29		30	20/1								100	SPRINKLER BELL	AE
	----	2300								--	31		32	30/2						915			HP-B2	
	EXT PEDESTAL REC		3000							30/1	33		34								915		----	
	EXT PEDESTAL REC			3000						30/1	35		36										SPACE	
	PANEL "SP"	4086								200/3	37		38	200/3						16194			PANEL "P2"	
	----		3554							--	39		40	--							11916		----	
	------			4260						--	41		42	--								11413	----	

A= 36770 VA | B= 31080 VA | C= 31462 VA
PHASE A LCL= 1654 VA | PHASE B LCL= 1161 VA | PHASE C LCL= 1570 VA
PHASE A W/LCL= 38424 VA | PHASE B W/LCL= 32241 VA | PHASE C W/LCL= 33031 VA
TOTAL VA= 99312 | TOTAL LCL= 4384 | TOTAL VA W/LCL= 103696
AMPS= **288** | HIGH PHASE AMPS= **320**

PANEL SP

MOUNTING: SURFACE | DOUBLE LUG: NO | VOLTS: 120/208 | MAIN: M.L.O.
NEMA 3R: NO | 200% NEUTRAL: NO | PHASE: 3 | BUS: 225A
FEED THRU: NO | I/G BUS: NO | WIRE: 4 | A.I.C.: 10,000

NOTES	LOCATION	A	B	C	LTG	CONV	KIT	RECP	MISC	BKR	CIRC		CIRC	BKR	MISC	RECP	KIT	CONV	LTG	A	B	C	LOCATION	NOTES
	POOL BLDG C RECEPT	1080						6		20/1	1		2	20/1						256			POOL BLDG A LTG.	
	ROOF C RECEPT		180					1		20/1	3		4	20/1						9	294		EXTERIOR POOL A LTG.	
AE	SPRINKLER BELL			100						20/1	5		6	35/2						-		2080	HP-C1	
	SPARE									20/1	7		8	--						-	2080		----	
	IDF RACK		1000							20/1	9		10	35/2							2080		HP-C2	
	SPARE									20/1	11		12	--								2080	----	
	SPARE									20/1	13		14	15/1						670			EFS-C1	
	SPARE									20/1	15		16	20/1									SPARE	
	SPARE									20/1	17		18	20/1									SPARE	
	SPARE									20/1	19		20	20/1									SPACE	
	SPACE										21		22										SPACE	
	SPACE										23		24										SPACE	
	SPACE										25		26										SPACE	
	SPACE										27		28										SPACE	
	SPACE										29		30										SPACE	
	SPACE										31		32										SPACE	
	SPACE										33		34										SPACE	
	SPACE										35		36										SPACE	
	SPACE										37		38										SPACE	
	SPACE										39		40										SPACE	
	SPACE										41		42										SPACE	

A= 4086 VA | B= 3554 VA | C= 4260 VA
PHASE A LCL= 584 VA | PHASE B LCL= 74 VA | PHASE C LCL= 520 VA
PHASE A W/LCL= 4670 VA | PHASE B W/LCL= 3628 VA | PHASE C W/LCL= 4780 VA
TOTAL VA= 11900 | TOTAL LCL= 1178 | TOTAL VA W/LCL= 13078
AMPS= **36** | HIGH PHASE AMPS= **40**

GENERAL PANEL SCHEDULE NOTES:

1. WHERE PANEL IS INDICATED TO INCLUDE FEED THRU LUGS, PROVIDE FEED THROUGH LUGS AT THE OPPOSITE END OF THE PANELBOARD FROM THE PANELBOARD MAIN LUGS.
2. WHERE PANEL IS INDICATED TO INCLUDE DOUBLE LUGS, PROVIDE A DOUBLE LUG KIT AT THE SAME END OF THE PANELBOARD AS THE PANELBOARD MAIN LUGS.
3. WHERE PANEL IS INDICATED TO INCLUDE 200% NEUTRAL, PROVIDE PANELBOARDS UL LISTED AS HAVING NEUTRAL BUSSES RATED TO CARRY 200 PERCENT OF THE CURRENT CARRYING CAPACITY OF THE PHASE BUSSING. OTHERWISE, NEUTRAL BUSSING TO BE FULL SIZE AND RECTANGULAR.
4. WHERE PANEL IS INDICATED TO INCLUDE AN I/G BUS, PROVIDE PANELBOARDS WITH AN ISOLATED GROUND BUS, DRILLED AND TAPPED FOR NUMBER OF ISOLATED GROUND CONDUCTORS SHOWN, AS WELL AS FOR ALL SPARES AND SPACES SHOWN ON THE PANELBOARD.
5. WHERE PANEL CIRCUIT BREAKER RATING IS SHOWN AS SERIES RATED, PROVIDE CIRCUIT BREAKERS IN PANELBOARD WHICH ARE SERIES RATED WITH THE UPSTREAM SYSTEM FOR THE AVAILABLE FAULT CURRENT. THE PANELBOARD SHALL BE MARKED WITH THE SERIES CONNECTED RATINGS, AS WELL AS ALL MARKING AS REQUIRED BY THE CEC **240.86(B).**
6. WHERE PANEL IS INDICATED AS RECESSED OR FLUSH MOUNTED, PROVIDE SPARE CONDUITS STUBBED UP INTO THE ACCESSIBLE CEILING SPACE. PROVIDE ONE (1) 3/4" CONDUIT ONLY FOR EACH THREE (3) SPARES OR SPACES, MINIMUM OF TWO (2). EACH CONDUIT SHALL BE TAGGED, CAPPED AND MARKED FOR FUTURE USE.
7. ALL BUSSING SHALL BE **TIN PLATED ALUMINUM.**
8. ALL CIRCUIT BREAKERS USED AS SWITCHES SHALL BE UL LISTED AND LABELED "SWD" FOR SWITCHING DUTY.
9. PROVIDE BREAKER INTERLOCK WITH ADJACENT BREAKER(S) FOR ANY MULTI-WIRE BRANCH CIRCUIT. BREAKER INTERLOCK GROUPING SHALL BE BY BRANCH CIRCUIT GROUP (i.e. MULTIPLE CIRCUITS SHARING A COMMON NEUTRAL (CEC **210.4(B).**) COMMON YOKE (CEC **210.7**) OR FURNITURE SYSTEM CEC **605.5** AND **605.7**). WHERE AN EXISTING PANEL IS BEING ALTERED OR MODIFIED IN ANY WAY, CONTRACTOR SHALL INCLUDE ALL COSTS IN BASE BID TO ADD BREAKER INTERLOCKS TO EXISTING MULTI-WIRE BRANCH CIRCUITS BASED ON CONTRACTOR'S INVESTIGATION OF EXISTING CONDITIONS.
10. PROVIDE BREAKER LOCK OFF DEVICE ON ANY CIRCUIT BREAKER FEEDING A TRANSFORMER AS REQUIRED, PER CEC **450.14**. WHERE AN EXISTING PANEL IS BEING ALTERED OR MODIFIED IN ANY WAY, CONTRACTOR SHALL INCLUDE ALL COSTS IN BASE BID TO ADD BREAKER LOCK-OFF DEVICES TO EXISTING TRANSFORMER CIRCUIT BREAKERS BASED ON CONTRACTOR'S INVESTIGATION OF EXISTING CONDITIONS.
11. ALL CIRCUIT BREAKERS SHALL BE BOLT-ON TYPE AND SHALL BE SUITABLE FOR 75 DEGREE AMPACITY CONDUCTORS.
12. PANELS SHALL BE OF THE DEAD FRONT SAFETY TYPE. PANELS SHALL BE MINIMUM 20" WIDE AND 5-3/4" DEEP UNLESS OTHERWISE NOTED ON PLAN.
13. COORDINATE WITH APPLICABLE TRADE TO INSURE RECESSED MOUNTED PANELBOARDS WILL SEAT FLUSH IN THE WALLS PROVIDED. PANEL TRIMS SHALL HAVE CONCEALED DOORS AND FASTENERS WITH FLUSH TYPE COMBINATION LOCK AND CATCH, TWO MILLED TYPE KEYS SUPPLIED WITH EACH PANEL. ALL LOCKS SHALL BE KEYED ALIKE AND EACH DOOR SHALL HAVE A PLASTIC COVERED DIRECTORY FRAME WITH A TYPED IDENTIFICATION CARD OF ALL CIRCUIT AND PANEL NUMBERS FOR BRANCH CIRCUIT PANELBOARDS.
14. UPON PROJECT COMPLETION, CONTRACTOR SHALL INSTALL TYPED AS-BUILT PANEL DIRECTORIES IN EACH PANEL WITHIN THE MFGR-PROVIDED DIRECTORY HOLDER. THE DIRECTORY SHALL CLEARLY IDENTIFY EACH CIRCUIT TO ITS CLEAR, EVIDENT, AND SPECIFIC PURPOSE OR USE. EACH CIRCUIT IDENTITY SHALL INCLUDE SUFFICIENT DETAIL TO ALLOW EACH CIRCUIT TO BE DISTINGUISHED FROM ALL OTHERS PER CEC ART **408.1** AND **408.4**. HANDWRITTEN DIRECTORIES ARE UNACCEPTABLE. COPIES OF AS-BUILT PANEL SCHEDULES SHALL BE PLACED IN PANEL DIRECTORIES. E.C. TO INCLUDE ALL COSTS REQUIRED FOR LARGER-THAN-STANDARD CUSTOM PANEL DIRECTORY HOLDERS TO ACCOMMODATE COPIES OF AS-BUILT PANEL SCHEDULES.
15. PANELBOARDS SHALL BE MANUFACTURED BY G.E., CUTLER-HAMMER, SIEMENS, OR SQUARE "D". FUSED PANEL BOARDS SHALL BE BY COOPER BUSSMANN.
16. PROVIDE SHOP DRAWING SUBMITTAL PER THE ELECTRICAL SPECIFICATION SUBMITTAL REQUIREMENTS FOR EACH PANEL DEPICTING CONFORMANCE WITH THE ABOVE NOTES AND SCHEDULES.

SPECIFIC PANEL SCHEDULE NOTES:

"A" PROVIDE LOCK-ON DEVICE.

"B" PROVIDE PERMANENT LOCK-OFF DEVICE THAT SHALL REMAIN IN PLACE WITH OR WITHOUT THE LOCK INSTALLED, PER CEC SECTION **110.25.**

"C" PROVIDE SHUNT TRIP DEVICE.

"D" PROVIDE GFCI TYPE DEVICE.

"E" PROVIDE A RED CIRCUIT BREAKER.

"F" PROVIDE A NEW BREAKER TO MATCH THE EXISTING IN PANEL.

"G" EXISTING BREAKER WITH NEW LOAD.

"H" PROVIDE AFCI TYPE DEVICE COMPLYING WITH CEC **210.12(A),(B),(C).**

PANEL SCHEDULE INDEX		
-	P2	P1
-	-	SP
-	-	

AS-BUILT PANEL DIRECTORY NOTE:

BRANCH CIRCUIT LOCATIONS NOTED WITH "(E)" INDICATE EXISTING CIRCUIT(S). THE IDENTITIES OF THESE CIRCUITS ARE BASED ON EXISTING PANEL DIRECTORIES AND/OR LIMITED AS-BUILT INFORMATION. CONTRACTOR SHALL FIELD VERIFY EACH BRANCH CIRCUIT AND PROVIDE COMPLETE, TYPED AS-BUILT PANEL DIRECTORIES AS REQUIRED THAT DISTINGUISH EACH CIRCUIT PER CEC ART **408.1** AND **408.4**. COMPLETED DIRECTORIES SHALL BE SUBMITTED TO THE ELECTRICAL INSPECTOR PRIOR TO FINAL ELECTRICAL INSPECTION. INCLUDE ALL COSTS IN BID.

EXISTING CIRCUIT BREAKER NOTE:

PROVIDE BREAKER INTERLOCK WITH ADJACENT BREAKER(S) FOR ANY MULTI-WIRE BRANCH CIRCUIT. BREAKER INTERLOCK GROUPING SHALL BE BY BRANCH CIRCUIT GROUP (i.e. MULTIPLE CIRCUITS SHARING A COMMON NEUTRAL (CEC **210.4(B).**) COMMON YOKE (CEC **210.7**) OR FURNITURE SYSTEM CEC **605.5** AND **605.7**). WHERE AN EXISTING PANEL IS BEING ALTERED OR MODIFIED IN ANY WAY, CONTRACTOR SHALL INCLUDE ALL COSTS IN BASE BID TO ADD BREAKER INTERLOCKS TO EXISTING MULTI-WIRE BRANCH CIRCUITS BASED ON CONTRACTOR'S INVESTIGATION OF EXISTING CONDITIONS.

IDENTIFICATION STAMP
DIV. OF THE STATE ARCHITECT
APP: 03-122664 INC:
REVIEWED FOR
SS ☑ FLS ☑ ACS ☑
DATE: 05/12/2023

pjhm architects
LICENSED ARCHITECT RAYMOND W. PJHM No. C15585 REN. 02/25 STATE OF CALIFORNIA
tk|sc COLLABORATIVE
11870 Pierce Street, Suite 160
Riverside, California 92505
951.299.4160 www.tk1sc.com
Project Leader - Nikolas Bruno
Electrical Lead - Nikolas Bruno
tk1sc Job #: B2202744.000
REGISTERED PROFESSIONAL ENGINEER RAYMOND W. SIMPSON No. E15610 ELECTRICAL STATE OF CALIFORNIA
OC Office: 24461 Ridge Route Drive #100, Laguna Hills, CA 92653 Phone: 949.496.6135 SD Office: 804 Pier View Way #103, Oceanside, CA 92054 Phone: 760.730.5507 LA Office: 837 Traction Avenue, #410, Los Angeles, CA 90013 Phone: 213.278.0172 Web: pjhm.com

HIGHLAND HIGH SCHOOL
50M POOL & AQUATICS CENTER
KERN HIGH SCHOOL DISTRICT

PANEL SCHEDULES

E-6.2

8/2/2022 11:34:37 AM

INVERTER SYSTEM SCHEMATIC:

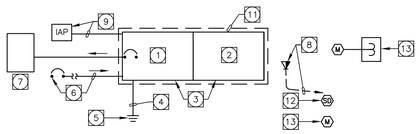

INVERTER SYSTEM PLAN NOTES:

1. INVERTER ELECTRONICS CABINET PER INVERTER SCHEDULE AND SYSTEM SPECIFICATIONS.
2. INVERTER BATTERY STRING CABINET(S) – NUMBER AS REQUIRED TO PROVIDE CODE REQUIRED BACK–UP TIME. INDIVIDUAL BATTERY STRINGS SHALL BE CONNECTED IN PARALLEL FOR ADDED REDUNDANCY.
3. PROVIDE ALL REQUIRED SEISMIC BRACING, AS REQUIRED BY STATE AND LOCAL CODES. IF LOCATED ON A RAISED FLOOR, PROVIDE CUSTOM MOUNTING FRAME SUCH THAT THE RAISED FLOOR DOES NOT SUPPORT THE INVERTER EQUIPMENT.
4. WHERE THE INVERTER SYSTEM IS CONSIDERED A SEPARATELY DERIVED SYSTEM, PROVIDE GROUNDING ELECTRODE CONDUCTOR(S) PER CEC **ARTICLE 250.30.** SEE THE INVERTER SCHEDULE FOR SIZING.
5. WHERE THE INVERTER SYSTEM IS CONSIDERED A SEPARATELY DERIVED SYSTEM, A CONNECTION SHALL BE MADE TO THE GROUNDING ELECTRODE PER CEC **ARTICLE 250.30.** SEE SEPARATELY DERIVED SYSTEM GROUNDING DETAIL FOR ADDITIONAL REQUIREMENTS.
6. INVERTER INPUT – SEE SINGLE LINE DIAGRAM AND INVERTER SCHEDULE(S). PROVIDE INPUT CIRCUIT BREAKERS OR INPUT CIRCUIT BREAKER TYPE AS RECOMMENDED BY THE MANUFACTURER.
7. TO EITHER 1) EMERGENCY INVERTER OUTPUT BRANCH CIRCUIT PANEL FROM INVERTER OUTPUT CIRCUIT BREAKER OR 2) TO INTEGRAL OUTPUT BRANCH CIRCUIT BREAKERS LOCATED WITHIN INVERTER– SEE SINGLE LINE DIAGRAM AND INVERTER SCHEDULE(S) FOR ADDITIONAL INFORMATION.
8. PROVIDE DATA OUTLET BOX, 4S/DP MINIMUM WITH SINGLE GANG RING, WITH A 3/4" C. UP 6" ABOVE THE ACCESSIBLE CEILING AND PROVIDE A BUSHING. MOUNT 12" ABOVE EACH INVERTER MODULE TO ALLOW ANALOG COMMUNICATIONS. SEE ADDITIONAL CABLING REQUIREMENTS IN INVERTER SYSTEMS SPECIFICATIONS.
9. REMOTE INVERTER ALARM PANEL WITH CONDUIT AND CONDUCTORS, SIZE AND QTY AS REQUIRED, LOCATED IN NORMALLY OCCUPIED AREA. (MAXIMUM OF 1000' FROM INVERTER). SEE INVERTER SCHEDULE AND INVERTER SYSTEM SPECIFICATIONS FOR MORE INFORMATION.
11. INVERTER ROOM SHALL BE PROVIDED WITH U.L.–LISTED SPILL CONTROL ACCESSORIES THAT MEET REQUIREMENTS OF 2019 CFC **SECTION 1206.2.11.5** AND AMENDMENTS, OSHA (STATE OR LOCAL AS APPLICABLE), NFPA, UL, AND THE LOCAL AUTHORITY HAVING JURISDICTION. AT MINIMUM PROVIDE THE FOLLOWING ACCESSORIES:
    - SPILL CLEANUP AND DISPOSAL KIT CONTAINING 5 D.O.T. GALLON CONTAINER, ELECTROLYTE NEUTRALIZER, PH TEST KIT, GLOVES, EYE PROTECTION, TYVEK COVERALL, AND COMPLETE INSTRUCTIONS. QUANTITY SHALL BE CAPABLE OF NEUTRALIZING SPILLED ELECTROLYTE TO A PH BETWEEN 5.0 AND 9.0. FOR VRLA BATTERIES, THE AMOUNT OF NEUTRALIZER SHALL BE SUFFICIENT TO ACCOMMODATE A SPILL OF 3% OF THE CAPACITY OF THE LARGEST VRLA CELL OR BLOCK. PROVIDE A SPILL CONTAINMENT SIGN ON WALL ABOVE LOCATION OF SPILL CLEANUP AND DISPOSAL KIT.
    - BOTH BATTERY WARNING AND CHEMICAL HAZARD IDENTIFICATION SYSTEM SIGNAGE AT EACH DOOR TO THE ROOM WHERE THE BATTERIES ARE LOCATED AND WHERE BATTERY ELECTROLYTE EXCEEDS 10 GALLONS. CONFORM TO CFC **SECTION 1206.2.8.6** IN ADDITION TO ANY LOCAL AHJ REQUIREMENTS/MODIFICATIONS TO THIS ARTICLE.
    - ROOMS CONTAINING BATTERY SYSTEMS WITH 70 KWH OR MORE OF ENERGY CAPACITY PER **CFC SECTION 1206** OR 50 GALLONS OR MORE OF ELECTROLYTE PER **CBC SECTION 1206** SHALL BE PROVIDED WITH AN EYE WASH STATION THAT COMPLIES WITH **OSHA 1926.441 (a)(6)** AND LATEST EDITION OF ANSI Z358.1. STATION SHALL BE SELF–CONTAINED PORTABLE, WALL–HUNG UNIT WITH A FLOW RATE OF 0.4 GALLONS/MINUTE FOR 15 MINUTES AND SHALL HOLD A MINIMUM OF 6 GALLONS OF NON–TOXIC, BACTERIOSTATICALLY–TREATED WATER. (ENVIROGUARD 1–800–206–9884). IF PERMANENTLY PLUMBED SHOWER IS PROVIDED IN EACH BATTERY ROOM, THAN AN EYEWASH STATION IS NOT REQUIRED. WHEN AN EYE WASH STATION OF ANY KIND IS INSTALLED, "EMERGENCY EYE WASH STATION" SIGNAGE SHALL BE PROVIDED ABOVE THE EYE WASH STATION.
    - PROVIDE START–UP TRAINING FOR SAFETY, MAINTENANCE, AND CARE OF ALL BATTERY–RELATED SAFETY EQUIPMENT FOR UP TO 10 PERSONS ACCESSING THE ROOM CONTAINING THE BATTERIES. TRAINING SHALL BE A MINIMUM OF 4 HOURS AND COVER BATTERY ROOM SAFETY, SPILL RESPONSE AWARENESS, ELECTRICAL SAFETY AND OTHER INDUSTRY BEST PRACTICE TRAINING TOPICS.
12. SMOKE OR HEAT DETECTORS (QTY AS REQUIRED FOR FIRE CODE COMPLIANCE) CONNECTED TO A CENTRAL MONITORING SYSTEM OR FIRE ALARM SYSTEM. INCLUDE ALL COSTS TO CONNECT TO NEW SYSTEM OR EXISTING SYSTEM AS REQUIRED BY PROJECT SCOPE.
13. PER CFC **SECTION 1206.2.11.4.1** WHERE BATTERY ENERGY CAPACITY EXCEEDS 70 KWH (OR 50 GALLONS OF ELECTROLYTE WHERE CBC OR OTHER LOCAL CODE IS ADOPTED). PROVIDE SUPERVISORY SIGNAL TO FIRE ALARM SYSTEMS VIA CURRENT MONITORING SWITCH. ROUTE 1 PHASE CONDUCTOR OF EACH INVERTER ROOM EXHAUST FAN BRANCH CIRCUIT THROUGH/ AROUND A DEDICATED, CURRENT–OPERATED LOAD MONITORING SWITCH THAT DETECTS OVERLOADS AND UNDERLOADS (INCLUDING FAN BELT BREAKAGE) WITHIN +/– 15 PERCENT OF AVERAGE CURRENT DRAW. LOCATE IN BARRIERED PULL BOX – NEMA 3R FOR WET LOCATIONS – AND CONNECT N.O. CONTACT TO FIRE ALARM MONITORING MODULE (SUPERVISORY SIGNAL). ADDITIONALLY CONNECT INVERTER THERMAL RUNAWAY DEVICE OUTPUT CONTACT TO FIRE ALARM MONITOR MODULE AND PROGRAM TO INDICATE THERMAL RUNAWAY/INVERTER SHUTDOWN (SUPERVISORY SIGNAL) LOCATE PULL BOX WITH DEVICES INDOORS WHERE POSSIBLE AND ADJACENT TO THE SERVING ELECTRICAL DISTRIBUTION EQUIPMENT. PROVIDE LABEL "INVERTER 1 BATTERY EX. FAN & THERMAL RUNAWAY/INVERTER SHUTDOWN MONITOR" PER LABELING SPECIFICATIONS. (NK TECHNOLOGIES #ASM–NOU–OU–FT – www.nktechnologies.com).

INVERTER SYSTEM REQUIREMENTS:

1. THE CONTRACTOR SHALL BE RESPONSIBLE FOR THE FURNISHING OF ALL MATERIAL, LABOR, EQUIPMENT, AND SERVICES, IN CONNECTION WITH THE INSTALLATION OF A COMPLETE AND FULLY FUNCTIONING AND CODE COMPLIANT INSTALLATION.
2. IT IS THE INTENT OF THE CONTRACT DOCUMENTS, WHICH ARE PRESENTED IN A DIAGRAMMATIC FORMAT, TO PROVIDE CONTRACTOR INFORMATION THAT SUPPLEMENTS AND ENHANCES THE GENERALLY ACCEPTED CONSTRUCTION MEANS, METHODS, TECHNIQUES, SEQUENCES AND PROCEDURES EMPLOYED IN CONNECTION WITH INSTALLATION OF THIS TYPE OF PRODUCT/SYSTEM.
3. THE CONTRACTOR SHALL ALSO INCORPORATE THE REQUIREMENTS OF THE MANUFACTURER'S INSTALLATION INSTRUCTIONS/WARRANTY REQUIREMENTS AS PART OF THE REQUIREMENTS OF THE CONSTRUCTION DOCUMENTS. IN THE EVENT OF A CONFLICT BETWEEN THE CONTRACT DOCUMENT REQUIREMENTS AND THE MANUFACTURER'S INSTALLATION REQUIREMENTS, THE MORE STRINGENT REQUIREMENTS SHALL APPLY – UNLESS THE MORE STRINGENT REQUIREMENT VOIDS APPLICABLE WARRANTIES OR VIOLATES THE REQUIREMENTS OF THE LOCAL AUTHORITY HAVING JURISDICTION. ANY SUCH CONFLICT SHALL IMMEDIATELY BE BROUGHT TO THE ATTENTION OF THE ENGINEER IN WRITING THROUGH THE FORMAL RFI PROCESS.
4. REFER TO THE ASSOCIATED SCHEDULES, SCHEMATICS, DRAWINGS, AND SPECIFICATIONS FOR DETAILED INFORMATION/REQUIREMENTS ON THIS PRODUCT/SYSTEM.

INVERTER SYSTEM SPECIFICATIONS

1. THE INVERTER SYSTEM SHALL HAVE A TWO YEAR WARRANTY ON CABINET AND ELECTRONICS AFTER INITIAL START–UP. THE INVERTER SHALL HAVE A TEN YEAR BATTERY WARRANTY, ONE–YEAR FULL REPLACEMENT AND PRO–RATA THEREAFTER.
2. THE INVERTER SYSTEM SHALL BE FACTORY ASSEMBLED AND SHALL HAVE THE FOLLOWING LISTINGS AND CERTIFICATIONS:
    - 1998 U.L. 924 (EMERGENCY LIGHTING).
    - 1998 U.L. 924A (AUXILIARY EQUIPMENT FOR USE WITH GENERATORS).
    - REQUIREMENTS OF N.E.C.(OR CEC, WHERE ADOPTED), O.S.H.A., AND THE LIFE SAFETY CODE(NFPA 101).
    - SPECIAL SEISMIC CERTIFICATION – CA OSHPD OSP CERTIFICATION SHALL BE PROVIDED AS EVIDENCE OF COMPLIANCE REGARDLESS OF PROJECT LOCATION.
3. THE INVERTER SYSTEM SHALL HAVE THE FOLLOWING CHARACTERISTICS:
    - MAXIMUM SOUND LEVEL OF 45dBA AS MEASURED 1 METER FROM THE INVERTER SYSTEM WHILE IT IS IN EMERGENCY OPERATION. INVERTER SYSTEM SHALL BE INAUDIBLE AT 1 METER FROM THE INVERTER SYSTEM WHEN IN NON–EMERGENCY MODE.
    - RATED AND BRACED AS APPROPRIATE TO WITHSTAND THE AVAILABLE FAULT CURRENT AT THE INPUT TERMINALS OF THE INVERTER. SEE FEEDER SCHEDULE FOR AIC VALUES.
    - 100% COMPATIBLE WITH ALL LIGHTING LOADS – REGARDLESS OF BALLAST TYPE.
    - CAPABLE OF SUPPORTING SMALL MOTOR LOADS.
    - COMPATIBLE WITH ALL ELECTRONIC SYSTEM LOADS.
    - MICROPROCESSOR–BASED, SOFTWARE–CONTROLLED, BT PWM DESIGN WITH IGBT TECHNOLOGY FOR A TRUE "NO–BREAK" SINE WAVE OUTPUT.
    - MINIMUM 97% EFFICIENCY. SYSTEM SHALL NOT REQUIRE AIR FILTERS.
    - SEALED MAINTENANCE–FREE LEAD CALCIUM BATTERIES WITH FRONT ACCESS TERMINALS AND A 10 YEAR LIFE EXPECTANCY.
    - SELF–TESTING, SELF–DIAGNOSTIC, AND SELF–EXERCISING FUNCTIONS WITH A LOG OF THE LAST 75 ALARM/INVERTER EVENTS.
    - STANDARD RS232 COMMUNICATIONS INTERFACE.
    - AUTOMATIC–OVERLOAD PROTECTION, SHORT CIRCUIT PROTECTION, LIGHTING AND SURGE PROTECTION, AS WELL AS A BACK–FEED RELAY AND/OR SCR FOR PREVENTION OF INADVERTENT LINE ENERGIZATION.
    - 14 STANDARD FUNCTION ALARMS, INCLUDING "OPEN OUTPUT CIRCUIT BREAKER" ALARM AND LOAD REDUCTION ALARM (10% DECREASE IN INVERTER LOAD) AS REQUIRED TO MEET UNIT SELF–TESTING REQUIREMENTS OF THE CURRENTLY–ADOPTED VERSION OF NFPA 101.
    - 10 STANDARD DIGITAL METER DISPLAYS.
    - SELF TESTING AND SELF DIAGNOSTIC FUNCTIONS WITH SEPARATE EVENT ALARM AND TEST LOGS, EVENT MEMORY CAPABLE OF LOGGING 225 DISTINCT EVENTS.
    - 90 MINUTES OF BATTERY CAPACITY AT FULL LOAD OUTPUT.
    - UNITY POWER FACTOR WHERE KVA = KW.
    - AN INTERNAL BREAK–BEFORE–MAKE MAINTENANCE BYPASS SWITCH SHALL BE PROVIDED.
4. THE INVERTER SYSTEM SHALL PROVIDE OUTPUT POWER WITH THE FOLLOWING CHARACTERISTICS:
    - CONTINUOUS LINE CONDITIONED COMPUTER QUALITY POWER.
    - SPIKE AND SURGE PROTECTION.
    - DYNAMIC BROWNOUT PROTECTION.
    - VOLTAGE REGULATION OF 10% NOMINAL.
    - LESS THAN 3% TOTAL HARMONIC DISTORTION AT 100% LINEAR LOAD.
5. THE INVERTER SHALL BE PROVIDED WITH A PROGRAMMABLE EMAIL/PRE–RECORDED VOICE MESSAGE ANALOG MODEM COMMUNICATING WITH INVERTER MFGR–MAINTAINED AUTOMATED CALL CENTER. INVERTER SYSTEM SHALL BE CONFIGURED/PROGRAMMED TO SEND EMAIL ALERT NOTIFICATIONS OR PRE–RECORDED VOICE MESSAGES AS REQUIRED BY OWNER'S REPRESENTATIVE. E.C. SHALL INCLUDE ALL COSTS TO PROVIDE A PLENUM–RATED CATEGORY 6 DATA CABLE AND RJ45 JACK LOCATED IN A RECESSED TELECOMMUNICATIONS OUTLET TO EACH INVERTER LOCATION. CATEGORY 6 CABLE SHALL BE EXTENDED TO NEAREST TELEPHONE BACKBOARD AND TERMINATED. SHELL PROJECT DESTINATION MAY BE THE MAIN TELEPHONE BACKBOARD. TENANT IMPROVEMENT PROJECT DESTINATION MAY BE THE NEAREST TELECOMMUNICATIONS CLOSET OR IDF. IN EITHER CASE, E.C. SHALL OBTAIN OWNER APPROVAL FOR CABLE ROUTING AND TERMINATION LOCATION PRIOR TO ROUGH–IN.
6. WHEN THE INVERTER SCHEDULE INDICATES OUTPUT CONTACTS ARE REQUIRED, PROVIDE AS FOLLOWS:

    "STD" – PROVIDE SUMMARY ALARM RELAY/CONTACT AND "INVERTER ON" RELAY/CONTACT

    "MULTI" – PROVIDE MULTI–OUTPUT CONTACT BOARD THAT PROVIDES STATUS CONTACTS FOR INVERTER ON, INVERTER OFF, AC PRESENT, SUMMARY FAULT, THERMAL ALARM, SYSTEM ON BYPASS, INTERNAL MAINTENANCE BYPASS SWITCH POSITION

    "BMS" – PROVIDE BACNET MS/TP COMMUNICATIONS CARD (BTL–LISTED) PROVIDING, AT MINIMUM, THE SAME POINTS AS THE MULTI–OUTPUT CONTACT BOARD. WHERE THE "BMS" OPTION IS SPECIFIED AND AN ALTERNATE/EQUAL PRODUCT IS USED THAT IS NOT CAPABLE OF BACNET COMMUNICATIONS, INCLUDE ALL COST IS BACK BID TO PROVIDE A MULTI–OUTPUT CONTACT CARD WITH A SEPARATE, EXTERNAL BACNET MS/TP I/O MODULE WITH POWER SUPPLY LOCATED IN A HINGED NEMA WALL–MOUNTED BOX. PROVIDE 120V CIRCUIT AS REQUIRED.
7. ALL INVERTER BATTERIES SHALL BE VALVE REGULATED, ABSORBENT GLASS MAT, LEAD–ACID TYPE (VRLA) DESIGNED FOR A 10 YEAR LIFE AND SHALL BE EQUIPPED WITH SELF–RESEALING FLAME–ARRESTING SAFETY VENTS PER CFC **ART 1206.2.10.6**.
8. FOR EACH INVERTER WITH A TOTAL BATTERY ELECTROLYTE CAPACITY 50 GALLONS OR GREATER (PER IFC) OR WITH AN ENERGY CAPACITY OF 70KWH OR GREATER PROVIDE THE FOLLOWING:
    a. A LISTED DEVICE OR OTHER AHJ–APPROVED METHOD TO PRECLUDE, DETECT AND CONTROL THERMAL RUNAWAY PER CFC **ART 1206.2.10.7**. EACH BATTERY STRING/DC DISCONNECT COMBINATION SHALL BE PROVIDED WITH CPI #BTM BATTERY THERMAL MANAGEMENT DEVICE OR EQUAL – FULLY CONNECTED /CONFIGURED – TO DISCONNECT ITS RESPECTIVE BATTERY DISCONNECT AND ITS RESPECTIVE BATTERY STRING. ADDITIONALLY, THE SYSTEM SHALL PROVIDE AN ALARM OUTPUT AT AN AVAILABLE INVERTER CUSTOMER ALARM INPUT CARD. INVERTER SHALL BE CONFIGURED TO REFLECT A HIGH PRIORITY ALARM "BATTERY THERMAL RUNAWAY" INDICATION VIA BUILDING FIRE ALARM AND, IF PROVIDED ON PROJECT, BUILDING AUTOMATION SYSTEM.

    b. ALL VRLA BATTERIES SHALL BE HOUSED IN LOCKABLE CABINETS. BATTERY CABINETS SHALL LIMIT THE MAXIMUM CONCENTRATION OF HYDROGEN TO 1.0 PERCENT OF THE TOTAL VOLUME OF THE CABINET DURING THE WORST CASE EVENT OF SIMULTANEOUS "BOOST" CHARGING OF ALL THE BATTERIES IN THE CABINET.

    c. BATTERY CABINETS SHALL HAVE EXTERIOR LABELS IDENTIFYING THE MANUFACTURER AND MODEL NUMBER OF THE SYSTEM AND ELECTRICAL RATING (VOLTAGE AND CURRENT) OF THE CONTAINED BATTERY SYSTEM. THERE SHALL ALSO BE SIGNS WITHIN THE CABINET TO INDICATE THE RELEVANT ELECTRICAL, CHEMICAL AND FIRE HAZARDS. CFC **ART 1206.2.8.6**.
9. WHEN THE INVERTER SCHEDULE INDICATES A "REMOTE ALARM", A REMOTE ALARM PANEL SHALL BE PROVIDED PER THE FLOOR PLAN. WHEN A REMOTE ALARM PANEL IS NOT SHOWN ON FLOOR PLANS, THE E.C. SHALL INCLUDE ALL COSTS TO PROVIDE 1 REMOTE ALARM PANEL PER INVERTER WITH CONDUIT AND CONDUCTORS AS REQUIRED TO LOCATE REMOTE ALARM PANEL(S) A MINIMUM OF 200 FT. FROM THE INVERTER(S).
10. WHEN THE INVERTER SCHEDULE INDICATES A "GEC SIZE", THE INVERTER(S) IS CONSIDERED TO BE A SEPARATELY DERIVED SYSTEM, PROVIDE CONDUIT AND COPPER GROUNDING ELECTRODE CONDUCTOR – SIZES AS INDICATED.
11. AN INTERNAL MAINTENANCE BYPASS SWITCH SHALL BE PROVIDED.
12. THE INVERTER SYSTEM SHALL BE PROVIDED WITH FACTORY STARTUP BY A MANUFACTURER APPROVED TECHNICIAN.
13. ALL INVERTERS SHALL BE SEISMICALLY CERTIFIED ASSUMING A COMPONENT IMPORTANCE FACTOR, I_p = 1.5). SEE STRUCTURAL PLANS FOR SITE SPECIFIC S_{DS} VALUES AND ADDITIONAL SEISMIC DESIGN CRITERIA. WHERE STRUCTURAL PLANS ARE UNAVAILABLE, CONTRACTOR SHALL RETAIN THE SERVICES OF A STRUCTURAL ENGINEER LICENSED IN THE STATE IN WHICH THE PROJECT OCCURS TO PROVIDE/VALIDATE SITE SPECIFIC SEISMIC DESIGN CRITERIA USING USGS US SEISMIC DESIGN MAP TOOLS OR OTHER INDUSTRY RECOGNIZED MAPPING TOOLS AS REQUIRED. WHERE SOIL CONDITIONS ARE UNKNOWN, USE CONDITIONS THAT RESULT IN THE HIGHEST S_{DS} FOR THE PROJECT LOCATION. ADDITIONALLY, INCLUDE ALL COSTS IN BASE BID ASSOCIATED WITH PROVIDING SPECIAL SEISMIC CERTIFICATION AND SPECIAL PERIODIC INSPECTIONS PER CBC CHAPTER 17A. SEE ELECTRICAL SPECIFICATIONS FOR ADDITIONAL REQUIREMENTS.

    SPECIAL SEISMIC CERTIFICATION SHALL BE PROVIDED BY THE INVERTER MANUFACTURER/VENDOR VIA 3RD PARTY ACCREDITED LISTING AGENCY'S CERTIFICATE OF COMPLIANCE. CERTIFICATION SHALL BE BASED ON TESTING – NOT ANALYSIS. THIS SPECIFICATION FURTHER REQUIRES ALL INVERTER(s) RECEIVE A STATE OF CALIFORNIA OFFICE OF STATEWIDE PLANNING AND DEVELOPMENT (OSHPD) SPECIAL SEISMIC CERTIFICATION PRE–APPROVAL (OSP) REGARDLESS OF INTENDED USE AND/OR LOCATION OF PROJECT.

    THE CONTRACTOR SHALL BE RESPONSIBLE FOR THE DESIGN AND INSTALLATION OF SEISMIC RESTRAINT/ATTACHMENT SYSTEMS VIA LICENSED STRUCTURAL ENGINEER IN THE STATE IN WHICH THE PROJECT OCCURS.
14. SHOP DRAWINGS SHALL BE SUBMITTED PER THE GENERAL SPECIFICATION REQUIREMENTS SHOWING CONFORMANCE TO THESE SPECIFICATIONS.
15. THE INVERTER SYSTEM SHALL BE A SEISMICALLY–CERTIFIED MEYERS–CPI ILLUMINATOR "E" OR "CII" SERIES – EQUAL BY ISOLITE #E3MAC SERIES, EVENLITE #LITEMINDER MODULAR SERIES OR HUBBELL. MYERS–CPI INVERTER SYSTEMS SERVE AS THE DESIGN–BASIS FOR THE INVERTER(S) ON THIS PROJECT. WHILE ISOLITE & EVENLITE SEISMICALLY–CERTIFIED INVERTER(S) AND HUBBELL/DUALITE LSN SEISMICALLY–CERTIFIED INVERTERS ARE CONSIDERED EQUAL TO MEYERS–CPI, USE OF THE ISOLITE, EVENLITE OR HUBBELL/DUALITE INVERTERS MAY REQUIRE ADDITIONAL SPACE, ROOM RECONFIGURATION, COOLING, ELECTRICAL INFRASTRUCTURE ETC. ANY ADDITIONAL CONSTRUCTION COST(S), INCLUDING RE–DESIGN/DOCUMENTATION COSTS, FOR USE OF ISOLITE, EVNLITE OR HUBBELL/DUALITE INVERTER(S) SHALL BE INCLUDED IN BASE BID. NO OTHER INVERTER PRODUCTS ARE KNOWN EQUALS TO THE MEYERS–CPI, ISOLITE, EVENELITE, AND HUBBELL PRODUCTS AT THIS TIME.

DESIGNATED SEISMIC SYSTEM:

EVERY INVERTER ON THIS PROJECT IS A PART OF A DESIGNATED SEISMIC SYSTEM (COMPONENT IMPORTANCE FACTOR, I_p = 1.5). SEE INVERTER SPECIFICATIONS FOR ADDITIONAL REQUIREMENTS.

INVERTER "INVP"

INPUT VOLTAGE	120/208			OUTPUT VOLTAGE	120/208				KW	3.0			GEC/BJ SIZE	NOT APPLICABLE								
INPUT PHASE	1			OUTPUT PHASE	1				OUTPUT CONTACTS	STD												
INPUT WIRE	3			OUTPUT WIRE	3				REMOTE ALARM	YES			AIC	PER SINGLE LINE								
NOTES	DESCRIPTION	WATTS ØA	WATTS ØB	LTG	GEN	KLT	LCL	MIS	BKR	CIRC	PHASE	CIRC	BKR	MIS	LCL	KLT	GEN	LTG	WATTS ØA	WATTS ØB	DESCRIPTION	NOTES
–	SITE LIGHTING	930		11	–	–	–	–	20/1	1	A	2	20/1	–	–	–	–	2	1290		MUSCO EM LTG "P2"	–
–	MUSCO EM LTG "P3"		1290	2	–	–	–	–	20/1	3	B	4	20/1	–	–	–	–	2		3560	MUSCO EM LTG "P1"	–
–	MUSCO EM LTG "P4"	3560		2	–	–	–	–	40/1	5	A	6	20/1	–	–	–	–	–	310		SPARE	–
–	SPARE		–	–	–	–	–	–	20/1	7	B	8	20/1	–	–	–	–	–		155	SPARE	–
–	SPARE	–		–	–	–	–	–	20/1	9	A	10	20/1	–	–	–	–	–	620		SPARE	–
	TOTAL WATTS = 2881							AMPS = 14										LCL = 576				

INVERTER BATTERY SCHEDULE

1. BATTERY TYPE: DRY
2. CHEMICALS IN BATTERIES:

COMMON NAME	CHEMICAL NAME	%	CAS #	MATERIAL FORM	QUANTITY STORED	QUANTITY IN USE	LOCATION	HAZARD CLASSES
GRID	LEAD	34%	7439–921	SOLID	N/A	CLOSED	–	TARGET ORGAN
LEAD OXIDE	LEAD DIOXIDE	31%	1309–60–0	SOLID	N/A	CLOSED	–	CORROSIVE / TOXIC/ TARGET ORGAN / CLASS 1 WATER REACTIVE
ANGLESITE	LEAD SULFATE	<1%	7446–14–2	SOLID	N/A	CLOSED	–	CORROSIVE / TOXIC/ TARGET ORGAN / CLASS 1 WATER REACTIVE
BATTERY ELECTROLYTE	SULFURIC ACID	34%	7446–93–9	LIQUID	N/A	CLOSED	–	CORROSIVE / TOXIC/ TARGET ORGAN / CLASS 1 WATER REACTIVE

3. NUMBER OF BATTERIES: 8 BATTERIES
4. LIQUID GALLON CAPACITY OF EACH BATTERY: 1.42 GALLONS
5. a. TOTAL SYSTEM GALLON CAPACITY: 11.36 GALLONS
   b. TOTAL SYSTEM ENERGY CAPACITY: 10.08 KWH
6. BATTERY STORAGE LOCATION / METHOD: IN INVERTER / METAL CABINET
7. REASON FOR BATTERY USE: ALTERNATE POWER SOURCE

INVERTER DIMENSIONS: 47"H X 30"W X 25"D. TOTAL WEIGHT = 827 POUNDS. FOR MOUNTING REQUIREMENTS SEE DETAIL 1 ON THIS SHEET.

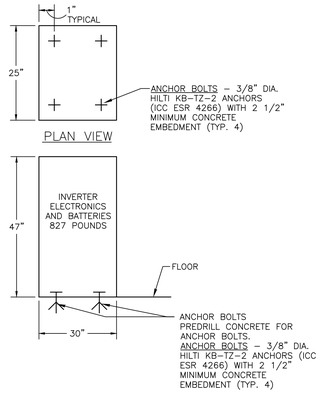

INVERTER "INVP" MOUNTING DETAIL 1

SCALE: N.T.S.

IDENTIFICATION STAMP
DIV. OF THE STATE ARCHITECT
APP: 03-122664 INC:
REVIEWED FOR
SS ☑ FLS ☑ ACS ☑
DATE: 05/12/2023

pjhm architects
LICENSED ARCHITECT RICHARD W. SIMPSON No. C15585 REN. 02/25 STATE OF CALIFORNIA
tk|sc COLLABORATIVE
11870 Pierce Street, Suite 160
Riverside, California 92505
951.299.4160 www.tk1sc.com
Project Leader - Nikolas Bruno
Electrical Lead - Nikolas Bruno
tk1sc Job #: B2202744.000
REGISTERED PROFESSIONAL ENGINEER RICHARD W. SIMPSON No. E15610 EXP. 12/31/2024 ELECTRICAL STATE OF CALIFORNIA
OC Office: 24461 Ridge Route Drive #100, Laguna Hills, CA 92653 Phone: 949.496.6159 SD Office: 804 Pier View Way #103, Oceanside, CA 92054 Phone: 760.730.5527 LA Office: 837 Traction Avenue, #410, Los Angeles, CA 90013 Phone: 213.278.0172 Web: pjhm.com

HIGHLAND HIGH SCHOOL
50M POOL & AQUATICS CENTER
KERN HIGH SCHOOL DISTRICT

INVERTER SCHEDULE

E–6.3

8/2/2022 11:34:37 AM

LIGHTING FIXTURE SCHEDULE NOTES:

A. GENERAL NOTES:

1. THE LIGHTING FIXTURES, LAMPS, BALLASTS, POWER SUPPLIES, DRIVERS AND TRANSFORMERS FOR THIS PROJECT HAVE BEEN SPECIFIED TO ENSURE THAT SPECIFIC AESTHETIC AND PERFORMANCE REQUIREMENTS WILL BE SATISFIED. THESE PRODUCTS HAVE BEEN CAREFULLY RESEARCHED AND EACH SPECIFIED ITEM HAS UNIQUE QUALITIES WHICH WERE DETERMINED TO BE ESSENTIAL IN SATISFYING THE OWNER'S, ARCHITECT'S, ENGINEER'S AND LIGHTING CONSULTANT'S DESIGN CRITERIA.
2. CONTRACTOR SHALL PROVIDE ALL MATERIALS AS DETAILED ON DRAWINGS AND/OR SCHEDULES, AND LABOR AS REQUIRED TO ACHIEVE A COMPLETE AND OPERATING LIGHTING SYSTEM.
3. CONTRACTOR SHALL NOTIFY THE ELECTRICAL ENGINEER AND/OR LIGHTING CONSULTANT OF ANY PROVISIONS OF THE SPECIFICATION THAT IS IN CONFLICT WITH LOCALLY ENFORCED CODES.
4. CONTRACTOR SHALL IMMEDIATELY NOTIFY THE ARCHITECT OF ANY REQUIRED MODIFICATIONS THAT ARE NOT SHOWN ON THE DRAWINGS.
5. ALL ELECTRICAL MATERIAL SHALL BE IN NEW & UNDAMAGED CONDITION WHEN INSTALLED. ALL EQUIPMENT SHALL BE LISTED BY A NATIONALLY RECOGNIZED TESTING LABORATORY.
6. ALL DIMENSIONS & MEASUREMENTS FOUND ON PLANS ARE APPROXIMATE. CONTRACTOR SHALL VALIDATE ALL DIMENSIONS PRIOR TO ORDERING MATERIAL TO INCLUDE MAKING FIELD MEASUREMENTS BASED ON ACTUAL SITE CONDITIONS TO DEVELOP COMPLETE ORDERS AND INSTALL SYSTEMS PER DRAWINGS AND SPECIFICATIONS.
7. REFER TO ARCHITECTURAL PLANS FOR EXACT LOCATION AND ELEVATION OF ALL LIGHTING FIXTURES AND ASSOCIATED DEVICES AND EQUIPMENT.
8. PRIOR TO AIMING/ADJUSTING ACTIVITIES, COMMISSIONING OR PUNCHWALK COMMENCEMENT, CONTRACTOR SHALL PROPERLY TEST AND VERIFY ALL CIRCUITRY AND CONTROL WIRING AND IMPLEMENT ALL CONTROLS PROGRAMMING.

B. INSTALLATION:

1. LOCATIONS OF THE FIXTURES SHALL BE PER THE ARCHITECTURAL REFLECTED CEILING PLAN(S) AND SHALL BE COORDINATED AT TIME OF ROUGH IN. CONFLICTS BETWEEN THE ARCHITECTURAL REFLECTED CEILING PLAN(S) AND THE ELECTRICAL/LIGHTING DESIGN PLAN(S) SHALL BE BROUGHT TO THE ATTENTION OF THE ARCHITECT IN WRITING PRIOR TO ORDERING FIXTURES.
2. LIGHTING DRAWINGS REPRESENT THE DESIGN INTENT OF THE EQUIPMENT, DEVICES, ETC. TO BE CONNECTED AND THE CIRCUITS TO WHICH THEY ARE TO BE CONNECTED. CONTRACTOR SHALL INSTALL ALL CONDUIT, J-BOXES AND ADDITIONAL HARDWARE AND DEVICES AS REQUIRED FOR A COMPLETE AND OPERATING SYSTEM.
3. ALL LIGHTING FIXTURES SHALL BE MOUNTED AND INDIVIDUALLY SUPPORTED IN ACCORDANCE WITH APPLICABLE CODES. FIXTURES SHALL BE FURNISHED AND INSTALLED WITH ALL REQUIRED MOUNTING DEVICES, HARDWARE AND ACCESSORIES.
4. CONTRACTOR TO VERIFY LIGHTING FIXTURE MOUNTING HARDWARE IS COMPATIBLE WITH APPROVED MOUNTING CONDITIONS. MOUNTING CONDITIONS MUST ALLOW FOR AIMING AND ADJUSTING OF LIGHTING FIXTURES ON SITE.
5. CONTRACTOR TO INCLUDE AIMING/ADJUSTING LABOR AFTER DARK AS REQUIRED FOR ANY ADJUSTABLE LIGHTING FIXTURE AND FOR EACH INDIVIDUAL LIGHTING FIXTURE HEAD OR LAMP HOLDER IN A MULTI-FIXTURE/MULTI-LAMP ASSEMBLY. LIGHTING FIXTURES TO BE AIMED/ADJUSTED PER THE DIRECTION OF OWNER, ARCHITECT AND/OR LIGHTING CONSULTANT.
6. CONTRACTOR TO SUPPLY ADEQUATE SUPPORT INCLUDING LADDERS, LIFTS OR OTHER EQUIPMENT REQUIRED TO ACCESS LIGHTING FIXTURES AT THE TIME OF FOCUS, INCLUDING EVENING OR NIGHT WORK AS MAY BE REQUIRED DUE TO SCHEDULE CONFLICT OR DAYLIGHT IMPACT. AIMING/ADJUSTING LABOR SHALL BE PREPARED FOR WORK WITH COMMON HAND TOOLS TO MAKE ADJUSTMENTS AND MINOR REPAIRS DURING AIMING.
7. ALL COVE MOUNTED LIGHTING FIXTURES SHALL EXTEND THE FULL LENGTH OF THE COVE. CONTRACTOR TO FIELD MEASURE COVE LENGTH AND ORDER QUANTITY OF LIGHTING FIXTURES AS REQUIRED. PROVIDE COMPLETE MANUFACTURER SHOP DRAWINGS OF BUILT-IN COVE OR LINEAR LIGHTING SYSTEMS.
8. CONTRACTOR TO REPLACE ALL INOPERATIVE LAMPS, LED ARRAYS OR SYSTEMS AT THE END OF THE CONSTRUCTION PHASE PRIOR TO THE FOCUS AND PROGRAMMING PHASE AND AGAIN PRIOR TO OWNER OCCUPANCY OR PROJECT OPENING.
9. ALL POLE MOUNTED FIXTURES, POST MOUNTED FIXTURES AND BOLLARDS SHALL BE PROVIDED WITH A STRUCTURAL FOOTING AS DETAILED ELSEWHERE IN THE DRAWINGS. FOOTING SIZE TO BE PROVIDED BY STRUCTURAL ENGINEER. REFERENCE FIXTURE SCHEDULE AND DETAILS FOR MORE INFORMATION.
10. ALL EXIT SIGNS SHALL BE INSTALLED IN STRICT ACCORDANCE WITH THE LOCAL FIRE PREVENTION CODE AUTHORITY. THE CONTRACTOR IS RESPONSIBLE FOR PROVIDING ALL NECESSARY HARDWARE SUCH THAT ALL EXIT SIGNS ARE INSTALLED IN AN APPROVED VISIBLE LOCATION. THE CONTRACTOR SHALL VERIFY CHEVRONS AND NUMBER OF FACES PER EXIT SIGN WITH ARCHITECTURAL REFLECTED CEILING PLAN(S). ANY DISCREPANCIES BETWEEN EXIT SIGNS DEPICTED ON ARCHITECTURAL AND ELECTRICAL PLANS SHALL BE BROUGHT TO THE ATTENTION OF THE ARCHITECT PRIOR TO ORDERING EXIT SIGNS.

C. SUBMITTALS AND SUBSTITUTIONS:

1. CONTRACTOR TO SUBMIT FOR APPROVAL ON THE PRODUCTS THEY INTEND TO FURNISH WITHIN TEN (10) DAYS OF AWARD OF CONTRACT. FAILURE TO SUBMIT WITHIN DEADLINE CONSTITUTES A GUARANTEE THAT ONLY THE BASE SPECIFIED PRODUCTS WILL BE SUPPLIED AND THAT NO OTHER PRODUCTS, WHETHER LISTED AS ALTERNATES OR NOT, WILL BE CONSIDERED.
2. CONTRACTOR TO PROVIDE A SUBMITTAL/SHOP DRAWING SUBMITTAL FOR EACH LIGHTING FIXTURE TYPE INCLUDING ACCESSORIES, BALLAST(S), POWER SUPPLIES, DRIVER(S) TRANSFORMER(S), AND INTEGRAL EMERGENCY BATTERIES AND TEST SWITCHES. ANY LIGHTING FIXTURE SUBMITTAL PROVIDED WITHOUT SPECIFIC LIGHTING FIXTURE'S ACCESSORIES, BALLAST, POWER SUPPLY, DRIVER, TRANSFORMER OR BATTERY INFORMATION SHALL BE REJECTED AS INCOMPLETE.
3. SUBSTITUTIONS OF THE SPECIFIED PRODUCTS ARE STRICTLY PROHIBITED – UNLESS APPROVED AS STATED HEREIN. LIGHTING FIXTURE SUBSTITUTIONS SHALL BE FORMALLY PRESENTED TO THE ELECTRICAL ENGINEER AND/OR LIGHTING CONSULTANT, BY APPOINTMENT ONLY, AT LEAST TEN (10) WORKING DAYS PRIOR TO BID TIME. THE SUBMITTAL MATERIAL SHALL INCLUDE THE FOLLOWING ITEMS.
   a. A COMPLETE AND OPERATING SAMPLE, WIRED FOR 120V OPERATION, WITH LAMP, CORD AND PLUG.
   b. A COMPLETE PHOTOMETRIC REPORT, FOR THE PROPOSED SUBSTITUTE PRODUCT, USING THE SPECIFIED LAMP OR LED TYPE AND WATTAGE, INCLUDING TABULATED CANDLEPOWER VALUES, COEFFICIENT OF UTILIZATION, AND AN ISO-FOOT-CANDLE DIAGRAM. PRORATED DATA WILL NOT BE ACCEPTABLE. THE PHOTOMETRIC REPORT MUST BE DONE IN ACCORDANCE WITH PUBLISHED I.E.S. TESTING PROCEDURES AND CERTIFIED BY A REGISTERED ELECTRICAL ENGINEER.
   c. A CURRENT ORIGINAL CATALOG DATA SHEET WITH LIGHTING FIXTURE CATALOG NUMBERS. MODIFIED DATA SHEETS WILL NOT BE ACCEPTABLE.
   d. A SIGNED COPY OF THE "SUBSTITUTION COMPLIANCE FORM", LOCATED IN THE DIVISION 1 SPECIFICATION, STATING THAT IF THE PROPOSED SUBSTITUTION IS ACCEPTED, THE PROJECT SCHEDULE WILL NOT BE NEGATIVELY AFFECTED. IF THE COMPLETION OF THE PROJECT IS DELAYED BECAUSE OF THE APPROVED SUBSTITUTION, THE CONTRACTOR WILL BE RESPONSIBLE FOR PAYMENT OF ANY ESTABLISHED LIQUIDATED DAMAGES.
   e. FOR SPECIFIC INTERIOR FIXTURE SUBSTITUTIONS, WHEN DIRECTED BY THE ELECTRICAL ENGINEER AND/OR LIGHTING CONSULTANT, A POINT-BY-POINT SCALED COMPUTER PRINTOUT SHALL BE PROVIDED VERIFYING THE ILLUMINATION LEVELS FOR THE SPECIFIC INTERIOR AREA. IF THE SUBSTITUTED FIXTURE IS AN EMERGENCY FIXTURE, THE REPORT SHALL BE RUN IN BOTH NORMAL AND EMERGENCY MODES. THIS REPORT SHALL BE CONFIGURED WITH SPECIFIC CONSTRAINTS, AS DIRECTED BY THE ENGINEER OF RECORD. THE REPORT MUST SHOW THAT THE SUBSTITUTED FIXTURE PROVIDES PERFORMANCE EQUAL TO OR BETTER THAN THE LIGHTING LEVELS OF THE SPECIFIED PRODUCT.
   f. FOR ALL EXTERIOR FIXTURE SUBSTITUTIONS, A POINT-BY-POINT SCALED COMPUTER PRINTOUT SHALL BE PROVIDED VERIFYING THE ILLUMINATION LEVELS FOR THE ENTIRE SITE PLAN BASED ON USING THE PROPOSED ALTERNATIVE FIXTURES. THE REPORT MUST SHOW THAT THE SUBSTITUTED FIXTURE PROVIDES PERFORMANCE EQUAL TO, OR BETTER THAN THE LIGHTING LEVELS AND UNIFORMITY RATIOS (MAX:MIN AND AVG:MIN) OF THE SPECIFIED PRODUCT. THIS REPORT SHALL BE CONFIGURED WITH THE FOLLOWING CONSTRAINTS.
      i. THE SPACING INCREMENT OR POINTS ON THE VERIFICATION REPORT SHALL NOT EXCEED TEN (10) FEET IN EITHER DIRECTION.
      ii. THE PHOTOMETRIC CALCULATION SHALL BE BASED ON PROVIDING MAINTAINED FOOT-CANDLE LEVELS USING MEAN LAMP LUMENS AND A LIGHT LOSS FACTOR, AS DIRECTED BY THE ENGINEER OF RECORD.
      iii. THE PHOTOMETRIC CALCULATION SHALL SHOW ANY ADDITIONAL ENERGY AND/OR ENERGY COSTS, FOR A TEN YEAR PERIOD, AS COMPARED TO THE ORIGINALLY SPECIFIED ITEM. THE TOTAL COSTS FOR THESE EXPENSES WILL BE DEDUCTED FROM THE CONTRACT COST.
4. DURING THE BIDDING PROCESS, THE CONTRACTOR SHALL REFER TO THE LIGHTING FIXTURE SCHEDULES ON THE ARCHITECTURAL PLANS (IF PROVIDED ON PROJECT), LIGHTING DESIGN PLANS/SPECIFICATIONS (IF PROVIDED ON PROJECT), AND THE ELECTRICAL PLANS. ANY DISCREPANCIES BETWEEN THEM INCLUDING, BUT NOT LIMITED TO, PART NUMBERS AND FIXTURE DESCRIPTIONS SHALL BE BROUGHT TO THE ATTENTION OF THE ARCHITECT, ELECTRICAL ENGINEER, AND LIGHTING DESIGNER WITH PRE-BID RFI(S). WHERE DISCREPANCIES ARE DISCOVERED WHEN THERE IS INSUFFICIENT TIME TO ISSUE PRE-BID RFI(S), THE BASE BID SHALL INCORPORATE THE MOST COSTLY VERSION OF THE DISCREPANCY AND SHALL BE MEMORIALIZED IN AN RFI OR AS A BID CLARIFICATION. PROVIDING A VOLUNTARY DEDUCTIVE ALTERNATE BID CLARIFYING FIXTURE SCHEDULE DISCREPANCIES IS ALSO AN ACCEPTABLE FORM OF DISCREPANCY DOCUMENTATION.
5. FIXTURE FINISHES:
   a. ALL FIXTURE FINISHES AND COLORS, UNLESS NOTED AS PREMIUM OR CUSTOM, SHALL BE SELECTED FROM THE MANUFACTURERS STANDARD COLOR OPTIONS AS LISTED ON THE FIXTURE SPECIFICATION SHEET. STANDARD FINISH SHALL BE SELECTED BY THE ARCHITECT, INTERIOR DESIGNER OR OWNER. THIS DIRECTION WILL BE PROVIDED IN THE SHOP DRAWING REVIEW PROCESS.
   b. ALL FIXTURES INDICATED WITH A PREMIUM OR CUSTOM COLOR SHALL BE ASSIGNED A CUSTOM COLOR REFERENCE NUMBER (SUCH AS RAL#) OR PROVIDE FIVE (5) PAINT CHIPS FOR MANUFACTURER TO USE TO MATCH COLOR. PREMIUM OR CUSTOM FINISH SHALL BE SELECTED BY THE ARCHITECT, INTERIOR DESIGNER OR OWNER. THIS DIRECTION WILL BE PROVIDED IN THE SHOP DRAWING REVIEW PROCESS.
6. THE LIGHTING FIXTURE MODEL NUMBER MAY INDICATE A FIXTURE OPTION THAT THE CONTRACTOR MUST IDENTIFY PRIOR TO ORDERING/PROVIDING SUBMITTALS, INCLUDING, BUT NOT LIMITED TO: VOLTAGE, MOUNTING CONDITION/HARDWARE, FINISH, DIMMING REQUIREMENTS/BALLAST INFORMATION. GENERALLY, CONTRACTOR-SELECTED OPTIONS ARE DENOTED IN THE PART NUMBER WITH BRACKETS EX: [VOLTS?]
   a. CONTRACTOR SHALL BE RESPONSIBLE FOR VERIFYING AND PROVIDING ALL HANGERS, CLIPS AND NECESSARY HARDWARE TO INSTALL THE FIXTURE IN THE ENVIRONMENT AS SHOWN ON THE ARCHITECTURAL PLANS. ALL FIXTURES SHALL BE PROVIDED WITH ALL REQUIRED STRUCTURAL SUPPORTS AS REQUIRED BY THE CURRENTLY ADOPTED CODES.
   b. VOLTAGES SHALL BE VERIFIED BY THE CONTRACTOR PRIOR TO ORDERING – SEE ELECTRICAL DRAWINGS FOR BRANCH CIRCUIT INFORMATION. IT IS POSSIBLE THAT FIXTURES WILL BE REQUIRED IN VARIOUS VOLTAGES.
7. "NO KNOWN EQUAL" LIGHTING FIXTURE PRICING/BIDDING NOTES:
   a. EACH FIXTURE IDENTIFIED AS "NO KNOWN EQUAL" ON THIS PROJECT SHALL BE BID IN A "LINE ITEM" FORMAT. A PER UNIT MATERIAL COST SHALL BE PROVIDED FOR EACH "NO KNOWN EQUAL" FIXTURE. THIS PRICE SHALL INCLUDE LAMPS AS WELL AS ALL OTHER REQUIRED MATERIALS REQUIRED FOR INSTALLATION. THE FIXTURE PRICE QUOTED WILL BE UTILIZED, PRIOR TO SHOP DRAWING APPROVAL, FOR "ADDING" AND/OR "DELETING" ANY QUANTITY OF THE FIXTURE.
   b. A UNIT COST SHALL BE SUBMITTED FOR EACH "NO KNOWN EQUAL" FIXTURE. SUBMIT THE PRICING AS PART OF THE BID FORM ON A SEPARATE 8 1/2" X 11" SHEET.
   c. FAILURE TO SUBMIT A LINE ITEM FOR EACH "NO KNOWN EQUAL" FIXTURE MAY RESULT IN THE REJECTION, REFUSAL, OR NON-ACCEPTANCE OF THE CONTRACTOR'S BID.
8. FIXTURES IDENTIFIED AS "NO KNOWN EQUAL – OWNER STANDARD" OR "CAMPUS STANDARD" ARE TO BE PROVIDED AS SPECIFIED, WITH SUBSTITUTIONS STRICTLY PROHIBITED. SEE ADDITIONAL NOTES FOR "NO KNOW EQUAL" BIDDING REQUIREMENTS.

D. LIGHTING FIXTURE SPECIFICATIONS:

1. ALL EXTERIOR LIGHTING EQUIPMENT SHALL BE RATED FOR WET LOCATION AND THE IP RATING OF ALL EQUIPMENT, INCLUDING BALLAST, POWER SUPPLY AND TRANSFORMER ENCLOSURES SHALL CONFORM TO THE CONDITIONS IN WHICH THE LIGHTING FIXTURE IS MOUNTED.
2. ALL BALLASTS, POWER SUPPLIES, DRIVERS AND/OR TRANSFORMERS THAT ARE REMOTELY LOCATED SHALL BE INSTALLED AS NEAR TO THE LIGHTING FIXTURE(S) AS POSSIBLE, HIDDEN FROM PUBLIC VIEW IN AN ACCESSIBLE COMPARTMENT THAT IS WELL VENTILATED. CONTRACTOR TO COORDINATE LOCATION(S) WITH ARCHITECT PRIOR TO ROUGH-IN.
3. ALL TRANSFORMERS SHALL BE FUSED ON THE SECONDARY SIDE.
4. COLOR FILTERS SHALL BE GLASS OR DICHROIC UNLESS OTHERWISE INDICATED ON DRAWINGS.
5. CONTRACTOR TO PROVIDE 20% ADDITIONAL COLOR FILTERS FOR EACH COLOR AND SIZE.
6. CONTRACTOR TO VERIFY THAT ALL LIGHTING FIXTURES SPECIFIED WITH A COLOR FILTER ARE SUPPLIED WITH ANY AND ALL ATTACHMENT DEVICES FOR THE FILTER.
7. ALL TRACK LIGHTING FIXTURES SHALL BE PROVIDED WITH THE APPROPRIATE TRACK SYSTEM WHICH SHALL INCLUDE ALL MISCELLANEOUS COMPONENTS REQUIRED, AS WELL A ANY REQUIRED CIRCUIT LIMITERS FOR A COMPLETE INSTALLATION. TRACK LENGTH(S) SHALL BE PER DRAWINGS.

E. DRIVERS / TRANSFORMERS:

1. [OPTION?] IN FIXTURE MODEL NUMBER INDICATE THAT THE FIXTURE DRIVER TYPE AND QUANTITY MUST BE VERIFIED BY THE CONTRACTOR USING FIXTURE CALLOUT INFORMATION AND FIXTURE SWITCHING CONFIGURATION INFORMATION.
2. CONTINUOUS DIMMING AND CONTROLLABLE LED:
   a. PROVIDE CONTROLLABLE LED DIMMING DRIVERS (INTEGRAL OR REMOTE) WITH POWER FACTOR GREATER THAN 0.85 AND MAXIMUM THD OF 20% AT FULL LOAD.
   b. PRIOR TO BID CONTRACTOR TO VERIFY DRIVER COMPATIBILITY WITH DIMMERS, DIMMING CONTROL SYSTEM(S) AND DISTRIBUTED LIGHTING CONTROL SYSTEM(S) WITH RESPECTIVE LIGHTING MANUFACTURER(S) AND LIGHTING/DIMMING CONTROL SYSTEM MANUFACTURERS. IF COMPATIBILITY DOCUMENTATION IS UNAVAILABLE FOR A GIVEN LED FIXTURE/LIGHTING CONTROL SYSTEM COMBINATION, CONTRACTOR SHALL INCLUDE COSTS IN THE BASE BID FOR RESPECTIVE LIGHTING MANUFACTURER AND LIGHTING CONTROLS MANUFACTURER TO TEST/WARRANT COMPATIBILITY OF SAID COMBINATIONS.
   c. CONTINUOUS LED DIMMING DRIVERS SHALL BE AT MINIMUM 4-WIRE 0-10V 10% DIMMING (HOT, NEUTRAL, DIM+, DIM-).

F. EMERGENCY FIXTURES / BATTERY PACKS:

1. LIGHT FIXTURES INDICATED AS EMERGENCY SHALL BE IDENTIFIED / PROVIDED AS FOLLOWS:
   a. INTEGRAL BATTERY PACK (EB):
      3a/3EB – FIXTURE CONNECTED TO CIRCUIT "3", CONTROL SWITCHLEG "a" – WITH THE BATTERY CHARGING LEAD CONNECTED TO A CONSTANT HOT CIRCUIT "3".
      3NL/3EB – FIXTURE CONNECTED TO A CONSTANT HOT CIRCUIT "#3". BATTERY CHARGING LEAD CONNECTED TO A CONSTANT HOT CIRCUIT "3".
   b. REMOTE BACK-UP SOURCE (EM):
      3a/3EM – ROUTED THROUGH A U.L. LISTED TRANSFER RELAY (LC & D #GR-2001E/S) FOR SWITCHED CONTROLS OR A U.L. LISTED TRANSFER SWITCH (BODINE #GTD SERIES DEVICE) FOR DIMMING CONTROLS. CONNECTED TO A CONSTANT HOT EMERGENCY CIRCUIT "3". SEE DISTRIBUTED LIGHTING CONTROL SPECIFICATIONS FOR DEVICE REQUIREMENTS WHEN CONTROLLED BY OCCUPANCY SENSORS.
      3NL/3EM – FIXTURE CONNECTED TO A CONSTANT HOT EMERGENCY CIRCUIT "3".
   c. REMOTE BACK-UP SOURCE (EM) NOTES:
      – ALL REMOTE BACK UP SOURCE (EM) FIXTURES SHALL BE PROVIDED WITH AN IN LINE FUSE. PROVIDE ADDITIONAL LABELING TO INDICATE FIXTURE IS PROTECTED BY A FUSE.
2. EMERGENCY BATTERY PACK NOTES:
   a. PROVIDE INTEGRAL TEST SWITCH / CHARGE LIGHT OPTION FOR ALL EMERGENCY BATTERY PACKS INSTALLED IN LIGHT FIXTURES.
   b. ALL RECESSED DOWNLIGHTS SUPPLIED WITH A BATTERY PACK SHALL BE PROVIDED WITH AN INTEGRAL COMBINATION TEST SWITCH / CHARGING INDICATOR LIGHT- MOUNTED INSIDE THE REFLECTOR. REMOTE TEST SWITCH / CHARGING LIGHTS ARE NOT ALLOWED. THE TEST SWITCH / CHARGING INDICATOR LIGHT SHALL BE SECURELY ATTACHED TO THE REFLECTOR WITH 18" OF SLACK LEADS, FOR EASY REMOVAL OF THE REFLECTOR ASSEMBLY.
   c. ALL BATTERY PACKS AND ALL COMBINATION LED BATTERY PACK/EMERGENCY DRIVERS SHALL BE UL924 LISTED.
   d. PRIOR TO BID, CONTRACTOR SHALL VERIFY WITH FIXTURE MANUFACTURER(S) THAT EMERGENCY BATTERY PACKS ARE MANUFACTURED TO BE INTEGRAL TO FIXTURE HOUSINGS.
   e. SHOULD THE SPECIFIED LED EMERGENCY BATTERY PACK(S) NOT FIT WITHIN A GIVEN FIXTURE(S) OR SHOULD THE FIXTURE NOT BE MANUFACTURED TO ACCOMMODATE A BATTERY PACK, CONTRACTOR SHALL INCLUDE ALL COSTS IN BASE BID TO LOCATE/CONNECT SELF-TESTING MINI INVERTER(S) (IOTA #ILS SERIES OF BODINE#ELI-S-[WATT?]) REMOTELY FROM THE FIXTURE(S) IN THE NEAREST ELECTRICAL ROOM OR TO LOCATE EMERGENCY BATTERY PACK(S) REMOTELY FROM THE FIXTURE ABOVE THE NEAREST ACCESSIBLE CEILING.
   f. LED BATTERY PACKS SHALL PROVIDE A MINIMUM OF 90 MINUTES OF EMERGENCY ILLUMINATION, AND SHALL BE RATED AT A MINIMUM OF 10 WATTS, OR AS SPECIFIED. WHERE A FIXTURE TYPE IS UNAVAILABLE WITH A 10W BATTERY PACK OR WHERE THE WATTAGE IS NOT SPECIFIED ON THE PLANS, INCLUDE ALL COST IN BASE BID TO PROVIDE THE HIGHEST WATTAGE AVAILABLE ON THE FIXTURE CUTSHEET. ANY LISTED EQUAL FIXTURE OR ANY SUBSTITUTION OFFERED BY THE CONTRACTOR MUST ALSO HAVE BATTERY PACKS CAPABLE OF PRODUCING THE SAME OR MORE LUMENS WHEN ON BATTERY AS OUTLINED ABOVE. ACCEPTABLE MANUFACTURES: BODINE OR IOTA.
   g. TO MAINTAIN UL LISTING OF LED FIXTURE, FIXTURE MANUFACTURER(S) SHALL INSTALL LED EMERGENCY BATTERY PACKS AT THE FACTORY AND OBTAIN A UL LISTING FOR THE FIXTURE WITH EMERGENCY BATTERY PACK. FIELD-INSTALLATION OF LED EMERGENCY BATTERY PACK(S) IS PROHIBITED.
   h. PROVIDE DAMP LOCATION VERSION IN ALL DAMP LABEL INSTALLATIONS.

LIGHTING FIXTURE SCHEDULE

SYMBOL	TYPE	MANUFACTURER AND MODEL NUMBER	FIXTURE VA/ WATTS	LAMP/ LAMP OPTION	GENERAL DESCRIPTION
	1	FOCAL POINT EQUATION 2 FE02-24-MG-5500LH-35K-1C-UNV-L11-G-WH EQUAL BY: LITHONIA OR PRUDENTIAL	53	LED/3500K	2' X 4' RECESSED, LED FIXTURE WITH CENTER DIFFUSER, 0-10V DIMMING TO 1% INTEGRAL DRIVER, 5500 LUMENS OUTPUT. (OFFICE AND CLASSROOM) – –
	2	LITHONIA FEM-L48-4000LM-IMAFL-WD-MVOLT-GZ10 3500K-80CRI EQUAL BY: LITHONIA OR PRUDENTIAL	32	LED/3500K	4' LONG LINEAR LED WITH OPAL SMOOTH POLYCARBONATE LENS, PENDANT MOUNT, VANDAL RESISTANT, 0-10V DIMMING. CHEMICAL RESISTANT. (CHEMICAL ROOMS) – –
	3	PORTFOLIO LD6B-30-D010-EU6B-3040-80-35 TRIM: 6LB-W-1-H-[ACCESSORIES?] EQUAL BY: LITHONIA OR PRUDENTIAL	28	LED/3500K	RECESSED FIXED DOWNLIGHT FOR USE WITH 28W, 3000-LUMEN LED AT 3500K. 6-INCH ROUND NOMINAL APERTURE. 0-10V DIMMING TO 1% STANDARD. WIDE 75-DEG DISTRIBUTION. SPUN ALUMINUM REFLECTOR. SELF-FLANGED. SEMI-SPECULAR CLEAR FINISH. CONTRACTOR TO CONFIRM TRIM/REFLECTOR FINISH WITH ARCHITECT AND VERIFY MOUNTING CONDITIONS PRIOR TO RELEASE OF ORDER.
	4	BIRCHWOOD – BRANDI LED BRA-LED-HLO-35-(LENGTH)-(FINISH)-TD-FW-SM EQUAL BY: LITHONIA OR PRUDENTIAL	40	LED/3500K	4' LONG LINEAR SURFACE MOUNTED FIXTURE WITH SOFT GLOW FROSTED LENS. MIN 3500 DELIVERED LUMEN OUTPUT, CONTINUOUS ROW RUNS AS SHOWN ON PLANS, INTEGRAL DIMMING DRIVER TO 1%, FINISH AS SELECTED BY ARCHITECT. PROVIDE WITH 90 MINUTE BATTERY PACK WHERE INDICATED AS EMERGENCY. (EXTERIOR CANOPIES)
	5	MUSCO SPORTS LIGHTING REFERENCE MUSCO DRAWINGS – EQUAL BY: N/A	–	LED/3500K	MUSCO SPORTS LIGHTING ON 50' POLE. REFERENCE MUSCO DRAWINGS FOR MORE INFORMATION. – – (SPORTS LIGHTING)
	6	LITHONIA WDGE4LED WDGE3-P1LED-40K-80CRI-R3-MVOLT-SRM-PE-DS-PIR-(FINISH) EQUAL BY: LITHONIA OR PRUDENTIAL	15	LED/4000K	WALL MOUNTTED LED FIXTURE FULL CUTOFF, MINIMUM 2000 LUMEN OUTPUT, MOUNT AT 8'-0" AFF ON WALL. FINISH AS SELECTED BY ARCHITECT. PROVIDE WITH INTERGRAL OCCUPANCY SENSOR. – (EXTERIOR WALL LIGHT)
	7	MODALIGHT 4T1100H27WH – EQUAL BY: LITHONIA OR PRUDENTIAL	34/34	LED/4000K	DIMMABLE LED FLEXIBLE LIGHT, DELIVERED OUTPUT OF 200 LUMENS /FT 2700K, CRI 90 2600 LUMEN OUTPUT. PROVIDE WITH 277V TO 24V DIMMING DRIVERS FOR COMPLETE INSTALLATION. LENGTH AS INDICATED ON PLANS.WET LOCATION LISTED. – (EXTERIOR ACCENT LIGHT)
	8	ALW LIGHTING – LIGHTPLANE 2 LP2RT-PRY-S(LENGTH)-MED-80-3500K 0/10V/S EQUAL BY: LITHONIA OR PRUDENTIAL	24	LED/3500K	RECESSED LINEAR LED FIXTURE WITH 2" APERATURE. FROSTED LENS LENGTH AS INDICATED ON PLANS. 3500K 80 CRI. ALUMINUM HOUSING DAMP LOCATION LISTED. 0-10V DIMMING. 870 LUMENS/FT. PROVIDE WIH 90 MINUTE EMERGENCY BATTERY WHERE INDICATED. (RESTROOMS AND LOCKER ROOMS)
	9	METALUX ST SERIES 2L2040-4000K-80-19 – EQUAL BY: LITHONIA OR PRUDENTIAL	19	LED/4000K	LINEAR 4'-0" SURFACE MOUNTED LED FIXTURE. 4000K TEMPERATURE 117 LUMENS PER WATT. 2000 LUMEN OUTPUT MINIMUM. 0-10V DIMMING PROVIDE WITH 90 MINUTE EMERGENCY BATTERY WHERE INDICATED. – (BACK OF HOUSE STORAGE AND UTILITY)
	10	ALW LIGHTING HBEAM2 HB2S-S(LENGTH)-MED-80-4000K-0/10V/S – EQUAL BY: –	24	LED/4000K	LINEAR SUSPENDED LED FIXTURE WITH 2" APERATURE MOUNT AT 9'-0" AFF. DIRECT OUTPUT ONLY. MINIMUM OUTPUT 800LUMENS/FT LENGTH AS INDICATED ON PLANS PROVIDE CONTINUOUS RUN. PROVIDE WITH 90 MINUTE BATTERY WHERE INDICATED. (TICKET BOOTH)
	11	KIM LIGHTING UR28-96L-155-4K8-4W-UNV-PT34-[FINISH] EQUAL BY: EATON OR LITHONIA	155	LED/4000K	ROUND POST TOP LED, 20,000 LUMENS, 28" DIAMETER. 0-10V DIMMING. 120-277V. TYPE IV WIDE DISTRIBUTION. 80 CRI. INTEGRAL MOTION SENSOR. 4' ROUND POLE. VERIFY FIXTURE AND POLE FINISH WITH ARCHITECT. PROVIDE WITH 90MINUTE BATTERY BACKUP. (EXTERIOR POST TOP)
OR	X	SURE-LITES CAX SERIES – – EQUAL BY: MC PHILBEN OR LITHONIA	4	LED	DIE-CAST ALUMINUM EXIT SIGN WITH HINGED AND LATCHED BRUSHED ALUMINUM STENCIL FACEPLATE AND BLACK HOUSING, RED LETTERING, SINGLE OR DOUBLE FACE AND DIRECTIONAL ARROWS AS INDICATED ON DRAWINGS. UNIVERSAL MOUNTING. –

SEE GENERAL LIGHTING FIXTURE SCHEDULE NOTES FOR CRITICAL FIXTURE SPECIFICATION AND ORDERING INFORMATION.

IDENTIFICATION STAMP
DIV. OF THE STATE ARCHITECT
APP: 03-122664 INC:
REVIEWED FOR
SS ☑ FLS ☑ ACS ☑
DATE: 05/12/2023

pjhm architects
Web: pjhm.com
OC Office: 24461 Ridge Route Drive #100, Laguna Hills, CA • 92653 Phone: 949.496.6159
SD Office: 804 Pier View Way #103, Oceanside, CA • 92054 Phone: 760.730.5527
LA Office: 837 Traction Avenue, #410, Los Angeles, CA • 90013 Phone: 213.278.0172

LICENSED ARCHITECT
RICHARD W. SWARTZ
No. C15585
REN. 02/25
STATE OF CALIFORNIA

tk|sc COLLABORATIVE
11870 Pierce Street, Suite 160
Riverside, California 92505
951.299.4160 www.tk1sc.com
Project Leader - Nikolas Bruno
Electrical Lead - Nikolas Bruno
tk1sc Job #: B2202744.000

REGISTERED PROFESSIONAL ENGINEER
RICHARD W. SWARTZ
No. E15610
EXP. 12-31-24
ELECTRICAL
STATE OF CALIFORNIA

HIGHLAND HIGH SCHOOL
50M POOL & AQUATICS CENTER
KERN HIGH SCHOOL DISTRICT

LIGHTING FIXTURE SCHEDULE
E-7.0

8/2/2022 11:34:37 AM

DLCS SCHEDULE

SYSTEM TOPOLOGY	COMMUNICATION TOPOLOGY	FIXTURE INTEGRATED SENSING	BAS INTEGRATION	WIRELESS DLCS COMPONENT BATTERY USAGE	REMARKS
STAND ALONE	WIRED	NO	NO	NONE	

DISTRIBUTED LIGHTING CONTROL SYSTEM REQUIREMENTS:

1. THE CONTRACTOR SHALL BE RESPONSIBLE FOR THE FURNISHING OF ALL MATERIAL, LABOR, EQUIPMENT, AND SERVICES, IN CONNECTION WITH THE INSTALLATION OF A COMPLETE AND FULLY FUNCTIONING AND CODE COMPLIANT INSTALLATION.
2. IT IS THE INTENT OF THE CONTRACT DOCUMENTS, WHICH ARE PRESENTED IN A DIAGRAMMATIC FORMAT, TO PROVIDE CONTRACTOR INFORMATION THAT SUPPLEMENTS AND ENHANCES THE GENERALLY ACCEPTED CONSTRUCTION MEANS, METHODS, TECHNIQUES, SEQUENCES AND PROCEDURES EMPLOYED IN CONNECTION WITH INSTALLATION OF THIS TYPE OF PRODUCT/SYSTEM.
3. THE CONTRACTOR SHALL ALSO INCORPORATE THE REQUIREMENTS OF THE MANUFACTURER'S INSTALLATION INSTRUCTIONS/WARRANTY REQUIREMENTS AS PART OF THE REQUIREMENTS OF THE CONSTRUCTION DOCUMENTS. IN THE EVENT OF A CONFLICT BETWEEN THE CONTRACT DOCUMENT REQUIREMENTS AND THE MANUFACTURER'S INSTALLATION REQUIREMENTS, THE MORE STRINGENT REQUIREMENTS SHALL APPLY – UNLESS THE MORE STRINGENT REQUIREMENT VOIDS APPLICABLE WARRANTIES OR VIOLATES THE REQUIREMENTS OF THE LOCAL AUTHORITY HAVING JURISDICTION. ANY SUCH CONFLICT SHALL IMMEDIATELY BE BROUGHT TO THE ATTENTION OF THE ENGINEER IN WRITING THROUGH THE FORMAL RFI PROCESS.
4. REFER TO THE ASSOCIATED SCHEDULES, SCHEMATICS, DRAWINGS, AND SPECIFICATIONS FOR DETAILED INFORMATION/REQUIREMENTS ON THIS PRODUCT/SYSTEM.
5. CONTRACTOR IS RESPONSIBLE TO VERIFY LIGHT FIXTURE DIMMING PROTOCOLS ARE COMPATIBLE WITH THE DLCS.
6. SECURITY STANDARD CERTIFICATIONS, SHOP DRAWINGS AND COMPONENT SUBMITTALS SHALL BE SUBMITTED PER THE GENERAL SPECIFICATION REQUIREMENTS SHOWING ALL COMPONENTS, WIRING CONFIGURATIONS AND PROGRAMMING SCHEDULES. SCALED SHOP DRAWINGS DEPICTING/IDENTIFYING ALL SYSTEM COMPONENT LOCATIONS SHALL BE PROVIDED. SUBMITTALS SHALL BE MADE SPECIFIC TO THE PROJECT – GENERIC SUBMITTALS AND SUBMITTALS WITHOUT SCALED SHOP DRAWINGS SHALL BE REJECTED.

nLIGHT:

WALL BOX SENSORS:	
STANDALONE SINGLE RELAY =	#WSXA–PDT
STANDALONE DUAL RELAY =	#WSXA–PDT–2P
SYSTEM–BASED DIMMING CONTROL =	#nWSXA–PDT–LV–DX
CEILING SENSORS:	
ONE–WAY DIRECTIONAL =	(WIRED) #NRM–PDT–9 W/MASKING AS REQUIRED (WIRELESS/LOW VOLTAGE) #RCMS–PDT–9–G2 W/ MASKING AS REQUIRED (WIRELESS/BATTERY) #RCMSB–7/45/45A–G2
360 DEGREE COVERAGE =	#NRM–PDT–9 STANDARD RANGE #(WIRED) NRM–PDT–10 EXTENDED RANGE/CORRIDOR #RCMS–PDT–9–G2 (WIRELESS/LOW VOLTAGE) #RCMS–PDT–10 EXTENDED RANGE/ CORRIDOR
EMBEDDED FIXTURE SENSOR =	(WIRELESS/LOW VOLTAGE) #RES7–PDT–G2 INDOOR (WIRELESS/LOW VOLTAGE) #RMSOD, RSDGR–127–G2 (WIRELESS/LOW VOLTAGE) RSBOR EXTERIOR (WIRELESS/BATTERY) #RCMSB–7/45/45A–G2
DAYLIGHT SENSORS:	
CLOSED LOOP SENSOR =	(WIRED) #NES–ADCX OR #NRM–ADCX (ONLY IF REQUIRED BY CLG. TYPE)
ONE–WAY DIRECTIONAL =	(WIRELESS) #RCMS–G2
EMBEDDED FIXTURE SENSOR =	(WIRELESS) #RES7
CONTROL UNITS:	
SWITCH / STEPPED DIMMING =	(WIRED) #NPP–16/#NSP–16 (WIRELESS) #RPP20–G2 NUMBER OF RELAYS AS REQUIRED.
CONTINUOUS DIMMING (0–10V) =	(WIRED) #NPP16–D (WIRELESS) #RPP20–D–G2 NUMBER OF RELAYS AS REQUIRED.
CONTINUOUS DIMMING (UNIVERSAL) =	(WIRED) #NSP5–PCD, NUMBER OF RELAYS AS REQUIRED. (WIRELESS) UTILIZE 0–10V PHASE DIMMING ADAPTER.
AUXILIARY INPUT/ OUTPUT CONTROL =	#NAR–40
RECEPTACLE CONTROL =	(WIRED) #NPP20 PL (WIRELESS) #RPP20–G2
AV SYSTEM SERIAL INTERFACE =	#nIO X (SCREENS / AV SYSTEM INTEGRATION)
HVAC CONTROL =	#NAR–40
MOVEABLE PARTITION INTERFACE & SENSOR =	#FRESCO TOUCH PANEL #NFCS–7TSN (PER SPACE), #NIO–1S POWER PACK (SENSOR POWER), & #ENTERTAINMENT NETWORKS PARTITION SENSOR W/BOTTOM COVER (www.entertainmentworks.com).
DUAL MODE CORRIDOR/STAIRWAY/AISLEWAY CONTROL INPUT =	#NDTC
WALL CONTROLS:	
DIMMING =	(WIRED) #NPODMA–DX SERIES (WIRELESS) #RPODB–DX (# OF DIMMERS AS REQUIRED – 4 / YOKE MAX)
KEYED SWITCH =	#NIO INPUT INTERFACE W/LEVITON #1221–2L–? KEYED SWITCH
TOUCH SCREEN =	7–INCH CAPACITIVE TOUCH #FCS–7TSN–[DMX?]–[FINISH?] W/ ACUITY FCS–PS10 24V POWER SUPPLY 3.5–INCH CAPACITIVE TOUCH #NPOD TOUCH INCLUDES ACUITY PS150 24V POWER SUPPLY
NETWORK COMM COMPONENTS:	
GATEWAY =	#NECY–MVOLT BAC ADR ENC GFXK WITH ENCLOSURE
BRIDGE =	#NBRG–8–KIT
NETWORK RELAY PANELS:	ARP INTENCXX NLT XXFCR MVOLT, QTY AS REQUIRED, TO INCLUDE SPARE RELAYS SHOWN IN SCHEDULES.
EMERGENCY POWER INTERFACE:	
SWITCHING / STEP DIMMING =	(WIRED) NPP16–ER (WIRELESS) #RPP20–ER–G2 NUMBER OF RELAYS AS REQUIRED, NORMAL CIRCUIT REQUIRED.
SWITCH / STEPPED DIMMING =	(WIRELESS) #RPP20–EM–G2, NUMBER OF RELAYS AS REQUIRED, NORMAL CIRCUIT NOT REQUIRED, GENERATOR AND DELAYED TRANSFER INVERTER ONLY.
CONTINUOUS DIMMING =	(WIRED) #NPP16–D–ER
CONTINUOUS DIMMING (0–10V) =	(WIRELESS) #RPP20–D–ER–G2. NUMBER OF RELAYS AS REQUIRED, NORMAL CIRCUIT REQUIRED. (WIRELESS) #RPP20–D–EM–G2. NUMBER OF RELAYS AS REQUIRED, NORMAL CIRCUIT REQUIRED EXCEPT WHERE GENERATOR AND DELAYED TRANSFER INVERTER POWER IS USED.
LOAD INTERFACE DEVICE:	
LUTRON COMPONENTS =	LUTRON #BCI–0–10.
REVERSE PHASE DIMMING COMPONENTS =	(WIRED) #NSP5–PCD–ELV120 OR LUTRON #PHPM–PA–DV–WH (WIRELESS) #PCDM & RPP20DG2/
FORWARD PHASE DIMMING COMPONENTS =	(WIRED) #NSP5–PCD–MLV OR LUTRON #PHPM–PA–DV–WH (WIRELESS) LUTRON #BCI–0–10/LUTRON #PHPM–PA–DV–WH
2 & 3 WIRE DIMMING COMPONENTS =	(WIRED) #NSP5–PCD–2W/3W OR LUTRON #PHPM–PA–DV–WH

WATTSTOPPER:

WALL BOX SENSORS:	
STANDALONE SINGLE RELAY =	#DW–100
STANDALONE 0–10V DIMMING WITH SINGLE RELAY =	#PW–311
STANDALONE DUAL RELAY =	#DW–200
SYSTEM–BASED DIMMING CONTROL =	#LMDW–102
CEILING SENSORS:	
ONE–WAY DIRECTIONAL =	(WIRED) #LMDC–100 WITH MASKING AS REQUIRED (PIR–ONLY WIRELESS) #LMPC–600 SERIES WITH MASKING AS REQUIRED.
360 DEGREE COVERAGE =	(WIRED) #LMDC–100 (PIR–ONLY WIRELESS) #LMPC–600 SERIES
DAYLIGHT SENSORS:	
OPEN LOOP SENSOR =	(WIRED) #LMLS–500 (1–3 ZONE) (WIRELESS) #LMDL–600 (1–3 ZONE)
CLOSED LOOP SENSOR =	(WIRED) #LMLS–400 (1 ZONE ONLY)
REMOTE CONTROL =	#LMCT–100 (HAND TO OWNER AT COMPLETION OF PROJECT.)
CONTROL UNITS:	
SWITCHED =	(WIRED) #LMRC–10? (NUMBER OF RELAYS AS REQUIRED) (WIRELESS) #LMRC–6??MCC
CONTINUOUS DIMMING (0–10V, WIRED) =	#LMRC–21? (NUMBER OF RELAYS AS REQUIRED).
CONTINUOUS DIMMING (0–10V, WIRELESS) =	#LMRC–6??MCC (NUMBER OF RELAYS AS REQUIRED).
CONTINUOUS DIMMING (UNIVERSAL, WIRED) =	#LMRC–22? (NUMBER OF RELAYS AS REQUIRED).
RECEPTACLE CONTROL =	#LMPL–101 OR LMPL–201 (WHERE MORE THAN 4 RECEPTACLE CONTROL UNIT SARE TIED TOGETHER) #BZ–250 (WHEN USING WIRELESS CONTROL UNIT) #LMPL–6?? (WHEN AVAILABLE)
HVAC CONTROL =	(WIRED) #LMRL–100 (WIRELESS) #LMRC–6??MCC
AV SYSTEM SERIAL INTERFACE =	(WIRED) #LMDI–100 ADD WIRELESS BRIDGE FOR WIRELESS SYSTEM.
MOVEABLE PARTITION INTERFACE & SENSOR =	PARTITION INTERFACE – #LMIO–102 PARTITION SWITCH/STATUS INDICATOR – #LMPS–104 POWER PACK – #BZ–50 (SENSOR POWER) PARTITION SENSOR – #ENTERTAINMENT NETWORKS SENSOR W/ BOTTOM COVER (www.entertainmentworks.com). ADD WIRELESS BRIDGE FOR WIRELESS SYSTEM.
DUAL MODE CORRIDOR/STAIRWAY/AISLEWAY CONTROL INPUT =	#LMZC–301, UNLESS OTHERWISE NOTED.
WALL CONTROLS:	
DIMMING =	(WIRED) #LMSW–101/102/103/104/108 (# OF SWITCHES AS REQUIRED 4/YOKE MAX) (WIRELESS) #LMDM–601 (# OF SWITCHES AS REQUIRED 4/YOKE MAX)
KEYED SWITCH =	#LMIO–101 INPUT INTERFACE W/ LEVITON #1221–2L–? KEYED SWITCH
TOUCH SCREEN =	4.3–INCH CAPACITIVE TOUCH #LMEQ–41 W/ WATTSTOPPER #LMTI–100–[VOLT] INJECTOR
NETWORK COMM COMPONENTS:	
ZONE SEGMENT MANAGER =	(WIRED OR WIRELESS) #LMSM–3E/#LMSM–6E W/#LMSM–ENC1 ENCLOSURE.
NETWORK BRIDGE / ROUTER / SWITCH =	(WIRED) #LMBC–300/#NB–ROUTER/#NB–SWITCH (WIRELESS) #LMBC–600/#LMBR–650/#NB–SWITCH
NETWORK WIRING =	(WIRED) #LM–MSTP.
NETWORK RELAY PANEL:	LMCP8, 24, OR 48
EMERGENCY POWER INTERFACE:	
POWER FAILURE ONLY:	
SWITCHING / STEP DIMMING =	#ELCU–200 BYPASS DEVICE.
CONTINUOUS DIMMING =	#ELCU–200 BYPASS DEVICE.
POWER FAILURE OR FIRE ALARM ACTIVATION:	
SWITCHING / STEP DIMMING =	LVS #EPC2 BYPASS DEVICE W/ LVS REMOTE POWER SUPPLY (#TR–A–2)
0–10V DIMMING =	LVS #EPC2D BYPASS DEVICE W/ LVS REMOTE POWER SUPPLY (#TR–A–2)
REVERSE/FORWARD PHASE DIMMING =	LVS #EPCDFATS BRANCH CIRCUIT EMERGENCY TRANSFER SWITCH (BCELTS)
REMOTE POWER SUPPLY SHALL UTILIZE UNSWITCHED EMERGENCY CIRCUIT SERVING RESPECTIVE EMERGENCY FIXTURES.	
LOAD INTERFACE DEVICE:	
LUTRON COMPONENTS =	LUTRON #BCI–0–10.
REVERSE/FORWARD PHASE DIMMING COMPONENTS =	LUTRON #PHPM–PA–DV–WH.

LUTRON CONTROLS (VIVE):

WALL BOX SENSORS:	
STANDALONE SINGLE RELAY (DUAL TECH) =	#MS–A102–XX
STANDALONE DUAL RELAY (DUAL TECH) =	#MS–A202–XX
SYSTEM–BASED DIMMING CONTROL =	(0–10V) #MS–Z101–XX (FORWARD PHASE) #MSCL–OP153M–XX
OCCUPANCY SENSORS:	
WALL MOUNT HALLWAY COVERAGE =	#LRF2–OHLB–P–WH
WALL MOUNT 180 DEGREE ONE–WAY DIRECTIONAL =	#LRF2–OWLB–P–WH (1500 S.F. MAXIMUM)
WALL MOUNT 90 DEGREE (CORNER) COVERAGE =	#LRF2–OKLB–P–WH (1225 S.F. MAXIMUM)
CEILING MOUNT 360 DEGREE COVERAGE =	#LRF2–OCR2B–P–WH (600 S.F. MAXIMUM)
DAYLIGHT SENSORS:	
OPEN LOOP SENSOR =	#LRF2–DCRB–WH
RF CONTROL UNITS:	
8A, 0–10V ZONE CONTROLLER =	#RMJS–8T–DV–B
5A, SWITCHING ZONE CONTROLLER =	#RMJS–5R–DV–B
16A, SWITCHING ZONE CONTROLLER =	#RMJS–16R–DV–B
20A, SWITCHING RECEPTACLE CONTROLLER =	#RMJS–20R–DV–B
20A WIRELESS RECEPTACLE (SPLIT) =	#CAR2S–2O–STR
20A WIRELESS RECEPTACLE (DUAL) =	#CAR2S–2O–DTR
0–10V FIXTURE CONTROLLER =	#FCJS–010
ECOSYSTEM DIGITAL FIXTURE CONTROLLER =	#FCJS–ECO
MAESTRO RF 6A SWITCH (120V) =	#MRF2S–6ANS–XX
MAESTRO RF 8A SWITCH (DUAL VOLTAGE) =	#MRF2S–8S–DV–XX
MAESTRO RF DIMMER (CFL/LED/INC/HAL FORWARD PHASE =	#MRF2S–6CL–XX
MAESTRO RF DIMMER (ELV REVERSE PHASE) =	#MRF2S–6ELV–XX
MAESTRO RF DIMMER (INC/MLV) =	#MRF2S–6ND–120–XX
ACCESSORY DIMMER (MULTI–LOCATION, 3–WAY, 4–WAY) =	#MA–R–XX
CONTACT CLOSURE OUTPUT DEVICE =	#RMJS–CCO1–24–B
WALL CONTROLS:	
WIRELESS 4 BUTTON, ENGRAVABLE =	#PJ2–4B (# OF DIMMERS AS REQUIRED – 4 / YOKE MAX)
WIRELESS BASIC ZONE/SCENE CONTROL =	#PJ2–2BRL– (# OF DIMMERS AS REQUIRED)
NON–ENGRAVABLE	#PJ2–3BRL– (# OF DIMMERS AS REQUIRED)
TOUCH SCREEN =	EXTRON 5–INCH TOUCH SCREEN #EO–1561–[FINISH?] W/ REMOTE IP LINK PROCESSOR #IPL–T–SI
NETWORK COMM COMPONENTS:	
VIVE WIRELESS HUB (WITH BACNET) =	#CPN–IRV–5 (HJS–2–FM)
NETWORK RELAY PANEL:	NOT AVAILABLE
LOAD INTERFACE DEVICE:	
0–10V TO 3–WIRE FLUORESCENT INTERFACE =	#BCI–0–10
PHASE ADAPTIVE DIMMING INTERFACE (REVERSE/FORWARD PHASE) =	LUTRON #PHPM–PA–DV–WH
3–WIRE FLUORESCENT TO PHASE ADAPTIVE INTERFACE =	#PHPM–WBX–DV–WH
ECOSYSTEM DIGITAL TO 0–10V INTERFACE =	#TVI–LMF–2A

COOPER LIGHTING SOLUTIONS NETWORK LIGHTING CONTROL (WaveLinx Wired/Wireless):

WALL BOX SENSORS:	
STANDALONE SINGLE RELAY =	#ONW–D–1001–MV–N SERIES
STANDALONE DUAL RELAY =	#ONW–D–1001–DMV–N SERIES
STANDALONE SINGLE RELAY WITH 0–10VDC =	#OSW–D–010 SERIES
SYSTEM–BASED WALLBOX =	NOT AVAILABLE
CEILING SENSORS:	
ONE–WAY DIRECTIONAL =	(WIRED) #OAC–DT–501 & SPP–MV (WIRED DIGITAL PIR) #MTS6 (MASKING) (PIR BATTERY WIRELESS) #CWPD–1500 (MASKING) (PIR LINE–POWERED WIRELESS)#WTA
360 DEG COVERAGE =	(WIRED) #OAC–DT–1000/OAC–DT–2000 & SPP–MV (WIRED DIGITAL PIR) #MTS6/MTS12 (PIR BATTERY WIRELESS) #CWPD–1500 (PIR LINE POWERED WIRELESS) #WTA (WIRELESS FIXTURE) #SWPD1 (<15FT) #SWPD2 (7–15FT) #SWPD3 (15–40FT)
DAYLIGHT SENSORS:	
OPEN LOOP SENSOR =	(WIRED DIGITAL) #MTS6/MTS12 (WIRELESS–BATTERY) #CWPD–1500 (WIRELESS LINE–POWERED) #WTA (WIRELESS FIXTURE) #SWPD1 (<15FT) #SWPD2 (7–15FT) #SWPD3 (15–40FT) #WOLC–7P–10A (7PIN EXTERIOR)
CONTROL UNITS:	
SWITCH/CONTINUOUS DIMMING (0–10V) =	(DIGITAL) #DAC–DC1 OR DAC–DC2 (ONE PER ZONE) (WIRELESS) #WSP–MV–010/#WSP–CA–010 (ONE PER ZONE)
CONTINUOUS DIMMING (UNIVERSAL) =	ONE OF THE ABOVE PLUS #LDCM–PL/#PD216
AUXILIARY INPUT =	(DIGITAL) #UIM (WIRELESS) #WSP–CA–010
OUTPUT CONTROL =	(DIGITAL) #RI–2–NA
RECEPTACLE CONTROL =	(DIGITAL) #HPRS–MV–DC1 (WIRELESS) #WSP–MV–010 (WIRELESS RECEPTACLE) #WR20
HVAC CONTROL =	#TRELLIX BACNET (OPTIONAL) #–R OPTION ON OCCUPANCY SENSOR.
AV SYSTEM INTERFACE =	#TRELLIX API
MOVEABLE PARTITION INTERFACE & SENSOR =	(DIGITAL) #UIM/IRTR (WIRELESS) #NA
DUAL MODE COORIDOR/STAIRWAY/AISLEWAY CONTROL INPUT =	PROGRAMMING THROUGH SYSTEM DEMAND RESPONSE. #TRELLIX SERVER LICENSE ADR–2.0b
WALL CONTROLS:	
DIMMING =	(DIGITAL) #DW–TSB–RL (WIRELESS–BATTERY) #WB–RL SERIES (WIRELESS LINE POWERED) #W–RL SERIES. ALL DEVICES ARE UP TO 5 ZONE/SCENE OR MIX WITH DIMMING
TOUCH SCREEN =	(DIGITAL) #TSE–55 OR #TSC–80 (WIRELESS) #TSE–57
KEYED SWITCH =	(DIGITAL) #UIM (WIRELESS) #WSP–CA–010 ALL USE LEVITON #1221–2L–? KEYED SWITCH
NETWORK COMM COMPONENTS:	
NETWORK ADAPTER =	(WIRED) #EG2 (WIRELESS/WIRED) #TRELLIX SERVER
NETWORK RELAY PANELS:	ILUMIN PLUS SERIES 12, 24, OR 48
EMERGENCY POWER INTERFACE:	
SWITCH / CONTINUOUS DIMMING (0–10V) =	(DIGITAL) #DACI–DC1 OR DAC–DC2 (WIRELESS) #WSP/CEPC–2–D
POWER FAILURE ONLY:	
SWITCHING / STEP DIMMING =	#ELCU–200 BYPASS DEVICE.
CONTINUOUS DIMMING =	#ELCU–200 BYPASS DEVICE.
POWER FAILURE OR FIRE ALARM ACTIVATION:	
SWITCHING / STEP DIMMING =	LVS #EPC2 BYPASS DEVICE W/ LVS REMOTE POWER SUPPLY (#TR–A–2)
0–10V DIMMING =	LVS #EPC2D BYPASS DEVICE W/ LVS REMOTE POWER SUPPLY (#TR–A–2)
REVERSE/FORWARD PHASE DIMMING =	LVS #EPCDFATS BRANCH CIRCUIT EMERGENCY TRANSFER SWITCH (BCELTS)
REMOTE POWER SUPPLY SHALL UTILIZE UNSWITCHED EMERGENCY CIRCUIT SERVING RESPECTIVE EMERGENCY FIXTURES	
LOAD INTERFACE DEVICE:	
FORWARD PHASE DIMMING =	(ALL SYSTEMS) PD216–120or277
REVERSE PHASE DIMMING COMPONENTS =	(ALL SYSTEMS) LDCM–PL
NETWORK INTERFACE:	(WIRED) #EG2 (WIRELESS/WIRED) #TRELLIX SERVER
STAND ALONE ROOM CONTROLLER:	WHEN REQUIRED TO HAVE NON NETWORK CONTROL, USE ROOM CONTROLLER RC3D–PL OR RC3DE–PL AND ASSOCIATED SYSTEM COMPONENTS

IDENTIFICATION STAMP
DIV. OF THE STATE ARCHITECT
APP: 03-122664 INC:
REVIEWED FOR
SS ☑ FLS ☑ ACS ☑
DATE: 05/12/2023

pjhm architects
LICENSED ARCHITECT RICHARD W. RISBOL NO. C15585 REN. 02/25 STATE OF CALIFORNIA
tk|sc COLLABORATIVE
11870 Pierce Street, Suite 160
Riverside, California 92505
951.299.4160 www.tklsc.com
Project Leader - Nikolas Bruno
Electrical Lead - Nikolas Bruno
tk1sc Job #: B2202744.00
REGISTERED PROFESSIONAL ENGINEER RICHMOND W. SIMPSON NO. E15610 ELECTRICAL STATE OF CALIFORNIA
OC Office: 24461 Ridge Route Drive #100, Laguna Hills, CA 92653 Phone: 949.496.6135 LA Office: 837 Traction Avenue, #410, Los Angeles, CA 90013 Phone: 213.278.0172 Web: pjhm.com
SD Office: 804 Pier View Way #103, Oceanside, CA 92054 Phone: 760.730.5507

HIGHLAND HIGH SCHOOL
50M POOL & AQUATICS CENTER
KERN HIGH SCHOOL DISTRICT

DISTRIBUTED LIGHTING CONTROL SPECIFICATIONS

E-7.1

8/2/2022 11:34:37 AM

DISTRIBUTED LIGHTING CONTROLS SYSTEM SPECIFICATIONS (OCCUPANCY / VACANCY SENSORS AND DAYLIGHTING CONTROLS):

1. SEE LIGHTING PLAN DRAWINGS FOR DISTRIBUTED LIGHTING CONTROL SYSTEM (DLCS) SPECIFICS, SPACE SPECIFIC CONFIGURATIONS/REQUIREMENTS, AS WELL AS FIXTURE BALLAST/DRIVER CONFIGURATIONS.
2. ALL PRODUCTS SHALL BE BACKED BY A FIVE YEAR MANUFACTURER'S WARRANTY.
3. ALL PRODUCTS LISTED IN THIS SPECIFICATION ARE BASED UPON PRODUCTS LISTED ON THIS SHEET. THE FEATURES AND CHARACTERISTICS OF THE PRODUCT LITERATURE AND SPECIFICATION SHEETS AVAILABLE ON THE VARIOUS MANUFACTURER'S WEB-SITES ARE INCLUDED IN THE REQUIREMENT OF THESE SPECIFICATIONS. ALL DLCS NETWORKED/NON-NETWORKED SYSTEM-BASED AND STANDALONE COMPONENTS SHALL BE PROVIDED BY A SINGLE MANUFACTURER.
4. DLCS COMPONENTS SHALL BE COMPLIANT WITH ALL APPLICABLE FEDERAL, STATE AND LOCAL ENERGY CODES.
5. ALL NETWORKED AND NON-NETWORKED SYSTEM-BASED DLCS SYSTEMS SHALL BE COMPLIANT WITH AND CERTIFIED TO THE FOLLOWING SECURITY STANDARDS SET FORTH IN THE LATEST PUBLISHED VERSION OF THE DESIGNLIGHTS CONSORTIUM'S "NETWORKED LIGHTING CONTROL SYSTEM TECHNICAL REQUIREMENTS" DOCUMENT (VERSION 4.0 OR LATEST PUBLISHED VERSION):
   - DLCS COMPONENTS: UL2900-1 UL STANDARD FOR SOFTWARE CYBER SECURITY FOR NETWORK-CONNECTABLE PRODUCTS.
   - DLCS DESIGN PROCESS: UL 2900-1 UL STANDARD FOR SOFTWARE CYBER SECURITY FOR NETWORK-CONNECTABLE PRODUCTS AND/OR ISO/IEC 27001 STANDARD FOR INFORMATION SECURITY MANAGEMENT SYSTEMS.
   - DLCS CLOUD SERVICES: ANY ASSOCIATED DLCS CLOUD SERVICES SHALL MEET THE REQUIREMENTS OF ISO/IEC 27017 (WITH ISO/IEC 27001) STANDARD FOR CODE OF PRACTICE FOR INFORMATION SECURITY CONTROLS FOR CLOUD SERVICES.

   WHERE THE MANUFACTURER CANNOT DEMONSTRATE COMPLIANCE WITH THE ABOVE REQUIREMENTS, THE DLCS MANUFACTURER SHALL PROVIDE A COMPREHENSIVE PRODUCT-SPECIFIC IT SECURITY STATEMENT FOR REVIEW BY THE OWNER. THE DLCS SHALL NOT BE CONNECTED TO AN OWNER-FURNISHED NETWORK WITHOUT PRIOR WRITTEN PERMISSION BY THE OWNER.

   ADDITIONALLY, WHERE INSTALLED IN THE STATE OF CALIFORNIA, SYSTEM-BASED DLCS SYSTEMS SHALL BE COMPLIANT WITH CA STATE ASSEMBLY BILL NO. 375 CALIFORNIA PRIVACY ACT OF 2018 AND CA STATE SENATE BILL NO 327 INFORMATION PRIVACY FOR CONNECTED DEVICES.
6. WHERE THE DLCS SCHEDULE INDICATES A SPECIFIC "SYSTEM TOPOLOGY" OPTION, PROVIDE ONE OF THE FOLLOWING:

   "NETWORKED" – PROVIDE A SYSTEM-BASED DLCS THAT COMMUNICATES USING A MANUFACTURER-SPECIFIC DLCS NETWORK ALLOWING BI-DIRECTIONAL FLOW OF INFORMATION BETWEEN DEVICES SUCH AS ROOM CONTROLLERS, SENSORS, RELAY PANELS AND NETWORK CONTROLLERS. PROVIDE A DLCS GUI AND RELATED SOFTWARE TO FACILITATE REMOTE DLCS DEVICE PARAMETERS CHANGES, REMOTE CONTROL ANY DLCS ELEMENT OR DEVICE, REMOTE SCHEDULE CHANGES/IMPLEMENTATIONS, AND REMOTE DLCS COMMISSIONING AND TROUBLESHOOTING. A NETWORKED SYSTEM TOPOLOGY SHALL BE CONFIGURED TO RESPOND TO LOCAL UTILITY DEMAND RESPONSE SIGNALS.

   "NON-NETWORKED" – PROVIDE A SYSTEM-BASED DLCS THAT COULD BE MADE TO COMMUNICATE USING A MANUFACTURER-SPECIFIC DLCS NETWORK, BUT FOR THIS PROJECT IS CONFIGURED WITHOUT ANY NETWORK CONNECTIVITY OR NETWORK COMPONENTS, EXCEPT FOR ANY NETWORK COMPONENTS REQUIRED FOR DUAL MODE CONTROL FOR CORRIDORS, WAREHOUSE AISLES ETC OR WHERE REQUIRED FOR BAS INTEGRATION REQUIRED IN THE DLCS SCHEDULE OR ELSEWHERE IN THE DRAWINGS AND SPECIFICATIONS. IN A "NON-NETWORKED" DLCS, DEMAND RESPONSE CAPABILITY IS NOT REQUIRED.

   "STAND ALONE" – PROVIDE INDIVIDUAL WALL SENSORS/CONTROLS – OPERATING AT 120V OR 277V. GENERALLY, STANDALONE COMPONENT INSTALLATIONS ARE TO BE AVOIDED AND ARE LIMITED TO USE IN SMALL ROOMS WHERE ADVANCED CONTROLS, DIMMING CAPABILITY, DEMAND RESPONSE, DUAL MODE CONTROL AND/OR NETWORK CONNECTIVITY ARE NOT REQUIRED BY APPLICABLE ENERGY CODE AND WHERE ACCEPTABLE TO AN END-USER.
7. WHERE THE DLCS SCHEDULE INDICATES A SPECIFIC "COMMUNICATIONS TOPOLOGY" OPTION, PROVIDE ONE OF THE FOLLOWING:

   "WIRED" – PROVIDE WIRING, AS REQUIRED, TO INTERCONNECT DLCS DEVICES. WIRING MAY BE A COMBINATION OF LOW AND LINE VOLTAGE CONDUCTORS BASED ON SPECIFIC MANUFACTURER REQUIREMENTS.

   "WIRELESS" – PROVIDE WIRELESS CONNECTIVITY BETWEEN WALL CONTROLS, WALL, CEILING OR FIXTURE-INTEGRATED SENSORS, ROOM CONTROLLERS, WIRELESS ROUTER(S), AND WIRELESS NETWORK BRIDGES. CONTRACTOR SHALL PROVIDE WIRELESS ROUTERS, QTY AS REQUIRED, TO MAINTAIN ROBUST COMMUNICATIONS WITH ALL WIRELESS DEVICES. ROBUST MEANS THAT A CHANGE OF VALUE FROM OR TO ANY DLCS SYSTEM COMPONENT FROM OR TO AN APPLICABLE WIRELESS ROUTER/BRIDGE OCCURS IN LESS THAN 3 SECONDS.

   "HYBRID" – WHERE A SOLELY WIRELESS DLCS TOPOLOGY IS DEEMED INADEQUATE BASED ON OPERATIONAL OR AESTHETIC REASONS, A WIRELESS TOPOLOGY SHALL BE AUGMENTED WITH WIRED SYSTEM TO CREATE A HYBRID COMMUNICATIONS TOPOLOGY. AREAS REQUIRING WIRED CONNECTIVITY SHALL BE OUTLINED ON THE LIGHTING PLANS AND UNLESS OTHERWISE INDICATED, ALL RESTROOMS SHALL BE PROVIDED WITH DUAL TECHNOLOGY OCCUPANCY SENSORS WHICH REQUIRE WIRED CONNECTIVITY AND WIRED POWER SUPPLY. A NETWORKED, SYSTEM-BASED DLCS INSTALLED WITH A HYBRID COMMUNICATIONS TOPOLOGY SHALL APPEAR IN THE USER GUI/SOFTWARE AS A SINGLE UNIFIED SYSTEM. SEPARATE GUI SOFTWARE INTERFACES FOR THE WIRED AND WIRELESS PORTIONS OF THE DLCS ARE UNACCEPTABLE.
9. WHERE THE DLCS SCHEDULE REQUIRES FIXTURE-INTEGRATED SENSORS, PROVIDE OCCUPANCY AND/OR DAYLIGHT SENSORS INTEGRATED WITHIN SPECIFIED FIXTURE TYPE THAT ALSO INTEGRATE INTO THE DLCS. SEE THE LIGHTING FIXTURE SCHEDULE FOR AFFECTED FIXTURE TYPE(S). WHERE INTEGRATED SENSORS DO NOT MEET OCCUPANCY/DAYLIGHT SENSOR COVERAGE REQUIREMENTS, CONTRACTOR SHALL AUGMENT COVERAGE WITH ADDITIONAL CEILING MOUNTED SENSORS AS REQUIRED AND AS A PART OF THE BASE BID.
10. WHERE THE DLCS SCHEDULE REQUIRES THE DLCS TO INTEGRATE WITH THE PROJECT'S BUILDING AUTOMATION SYSTEM (BAS) – SEE THE DLCS START-UP, BUILDING AUTOMATION SYSTEM (BAS) INTEGRATION, COMMISSIONING, & TRAINING PORTION OF THIS SPECIFICATION FOR ADDITIONAL REQUIREMENTS.
11. WHERE THE DLCS SCHEDULE INDICATES "WIRELESS" OR "HYBRID" COMMUNICATIONS TOPOLOGIES AND ALSO ALLOWS WIRELESS DLCS COMPONENT BATTERY USAGE, PROVIDE BATTERIES WITHIN THE WIRELESS DLCS COMPONENTS INDICATED IN LIEU OF LINE OR LOW VOLTAGE POWER SOURCES.
12. DLCS COMPONENTS SHALL BE BE PROVIDED AS FOLLOWS:
    a. STANDALONE: WALL MOUNTED OCCUPANCY SENSORS SHALL BE UL LISTED AND HAVE A MINIMUM LOAD CAPACITY OF 800 WATTS AT 120 VOLTS AND 1200 WATTS AT 277 VOLTS. WALL SENSORS SHALL ALSO BE DECORA STYLE, WITH A LOW-PROFILE APPEARANCE AND A HARD LENS FOR DURABILITY. SENSOR SHALL UTILIZE PASSIVE INFRARED TECHNOLOGY (PIR) AND ULTRASONIC/MICROPHONIC TECHNOLOGY. UNIT SHALL BE RATED FOR 120/277 VOLT WITH NO MINIMUM LOAD, COMPATIBLE WITH ALL THE SPECIFIED BALLASTS, PROVIDED WITH A NEUTRAL CONNECTION (NO LEAKAGE TO GROUND) AND NO LEAKAGE TO LOAD IN THE "OFF" MODE. SENSOR SHALL BE UTILIZED IN SPACES NOT EXCEEDING 150 SQ.FT. SINGLE RELAY SENSORS SHALL BE CONFIGURED WITH THE RELAY IN A "MANUAL ON/ AUTO OFF" SETTING. DUAL RELAY SENSORS SHALL BE CONFIGURED WITH THE FIRST RELAY IN A "AUTOMATIC ON/ AUTOMATIC OFF" SETTING AND THE SECOND RELAY IN A "MANUAL ON/ AUTOMATIC OFF" SETTING. FACTORY STANDARD COLOR TO BE APPROVED BY ARCHITECT.
    b. SYSTEM-BASED (NETWORK OR NON-NETWORK): THE OCCUPANCY SENSOR SYMBOL SHALL REPRESENT A LOW VOLTAGE, WALL MOUNTED OCCUPANCY SENSOR CONNECTED TO A CONTROL UNIT(S) AS REQUIRED. SENSOR SHALL BE DECORA STYLE WITH A LOW-PROFILE APPEARANCE, HAVE ON/OFF/RAISE/LOWER BUTTONS, AND A HARD LENS FOR DURABILITY. FACTORY STANDARD COLOR TO BE APPROVED BY ARCHITECT.

       SYSTEM-BASED (NETWORK OR NON-NETWORK) OR STANDALONE CEILING MOUNTED OCCUPANCY SENSORS SHALL SHALL REPRESENT A LOW VOLTAGE, CEILING-MOUNTED OCCUPANCY SENSOR WITH A LOW-PROFILE APPEARANCE AND SHALL BE CONFIGURED IN ONE OF THE FOLLOWING WAYS AS INDICATED ON THE DRAWINGS:
       - AUTO ON: a/b
       - SWITCHED: AUTO ON a / MANUAL ON b
       - CONTINUOUS DIMMED: AUTO ON 50% a / MANUAL ON 100% a
    c. SENSOR(S) SHALL UTILIZE DUAL TECHNOLOGY (PIR AND ULTRASONIC/MICROPHONIC TECHNOLOGY) WITH 360 DEGREE COVERAGE. IN SPACES WITH DESKTOP ACTIVITIES, THE COVERAGE SHALL BE "HAND MOTION" AND SHALL NOT EXCEED 500 SQ. FT. AT A MAXIMUM CEILING HEIGHT OF 10 FT. IN CORRIDORS, STORAGE ROOMS AND OTHER SPACES WITH NON-DESKTOP ACTIVITIES, COVERAGE SHALL BE "HALF-STEP, WALKING MOTION" AND SHALL NOT EXCEED 1200 SQ. FT. AT A MAXIMUM CEILING HEIGHT OF 10 FT. PIR-ONLY WIRELESS OCCUPANCY SENSORS SHALL NOT BE UTILIZED IN RESTROOMS OR LOCKER ROOMS.
    d. "H" AT THE OCCUPANCY SENSOR INDICATES CONNECTION TO AUXILIARY OUTPUT CONTROL DEVICE FOR CONTROL OF A THIRD PARTY DEVICE VIA LOW-VOLTAGE CONTACT CLOSURES – 1 AMP @ 24V AC/DC. NC/NO RELAYS SHALL BE CONNECTED TO A CONTROLLER TO PERFORM THE AUXILIARY CONTROL REQUIREMENTS INDICATED BY THE DRAWINGS.
    e. OCCUPANCY SENSORS LOCATED WITHIN CORRIDORS, HALLWAYS, STAIRWAYS/WELLS, AISLEWAYS WITHIN WAREHOUSE SPACES, AND IN OTHER AREAS PER PLANS AND/OR SOO SHALL BE CONFIGURED TO CREATE DUAL MODE CONTROL FUNCTIONALITY PER THE SOO/ZONE SCHEDULE. CONTRACTOR SHALL BE RESPONSIBLE FOR PROVIDING ALL DEVICES AND WIRING REQUIRED FOR DUAL MODE OPERATIONS AND ANY PROGRAMMING/CONFIGURATION OF TIME-BASED OPERATING PARAMETERS. COORDINATE WITH OWNER TO DETERMINE BUSINESS HOUR/AFTER BUSINESS HOUR MODES. IF THE PLANS IDENTIFY A NEW OR EXISTING LIGHTING CONTROL PANEL AS THE SOURCE OF DUAL MODE TIMING, E.C. SHALL INCLUDE ALL COSTS TO INSTALL ANY NECESSARY I/O TERMINALS, CARDS, ETC. TO MAKE THE SYSTEM FULLY FUNCTIONAL.
    f. NETWORK SYSTEM-BASED DLCS SYSTEMS SHALL PROVIDE/RESULT IN "LADDERLESS COMMISSIONING" OF DAYLIGHT CONTROLS. AT A MINIMUM, NETWORK ACQUIRED DATA SHALL PROVIDE CT-BASED LIGHTING POWER (WATTS) MEASUREMENTS PER THE COMMISSIONING PORTION OF THESE REQUIREMENTS. PROVIDE NETWORKED CONTROL UNITS/POWER PACKS/INTERFACES AND MISCELLANEOUS EQUIPMENT AS FOLLOWS:
       1) NETWORK SEGMENT MANAGER OR BORDER ROUTER WITH NATIVE BACnet IP – QUANTITY AS REQUIRED BASED UPON A MAXIMUM OF 100 LOCAL ROOM NETWORKS PER SEGMENT AND A MINIMUM OF ONE SEGMENT MANAGER PER FLOOR. THIS EQUIPMENT SHALL BE LOCATED IN THE TYPICAL FLOOR ELECTRICAL ROOM.
       2) NETWORK BRIDGE CONNECTING THE SEGMENT MANAGER TO THE CONTROLLER SUB/LOCAL NETWORK.
       3) ALL CORRIDORS, WAREHOUSE AISLE WAYS, AND STAIRWELLS SHALL BE PROVIDED WITH DUAL MODE CORRIDOR/STAIRWAY CONTROLS TO INCLUDE CEC-LISTED TIME CLOCK(S), ROUTERS, OR SYSTEM GATEWAYS, INTERPOSING RELAYS (WHEN INTERFACING WITH EXISTING CEC-LISTED RELAY PANELS), WIRING, 120V POWER, PROGRAMMING, ETC. NECESSARY FOR A COMPLETE AND FUNCTIONING CONTROL SYSTEM.
       4) INCLUDE ALL COSTS IN BASE BID TO PROVIDE 120V CIRCUIT(S) AND RECEPTACLE(S) NECESSARY TO POWER ALL DEMAND RESPONSE EQUIPMENT.
       5) PROVIDE DATA OUTLET/PATHWAY, DATA CABLING (IF REQUIRED ELSEWHERE BY PROJECT DOCUMENTS), AND CONNECTION TO THE PROJECT'S LOCAL AREA NETWORK.
       6) INCLUDE ALL COSTS IN BASE BID TO PROVIDE 120V CIRCUIT(S) AND RECEPTACLE(S) NECESSARY TO POWER ALL NETWORK SEGMENT MANAGERS, SWITCHES AND ROUTERS.
       7) DEMONSTRATE DLCS RESPONSE TO A SIMULATED DEMAND RESPONSE REQUEST AS PART OF THE LIGHTING COMMISSIONING PROCESS. WHERE MORE THAN ONE WIRING TOPOLOGY AND/OR ZONE IS REQUIRED TO ACCOMMODATE DEMAND RESPONSE, ALL WIRING TOPOLOGIES AND ZONES SHALL BE TESTED ACCORDINGLY. SEE DLCS SOO FOR POWER REDUCTION PERCENTAGES BY ROOM TYPE THAT SHALL BE UTILIZED IN THE SIMULATED DEMAND RESPONSE TESTING.
    g. WHERE INDICATED ON DRAWINGS, PROVIDE DLCS DAYLIGHTING CONTROLS AS FOLLOWS:
       1) AUTOMATIC SWITCHING DAYLIGHTING CONTROLS SHALL BE PROVIDED TO SWITCH SELECTED FIXTURES AND/OR LAMPS OFF AND ON BASED UPON LIGHTING LEVELS PRESENT IN THE CONTROLLED SPACE. THE DAYLIGHTING CONTROLS SHALL BE CONNECTED TO THE CONTROL UNIT. THE SENSOR SHALL UTILIZE AN INTEGRAL PHOTO DIODE TO MEASURE AMBIENT LIGHT LEVELS. CONTROLS SHALL BE FULLY ADJUSTABLE FROM 1 TO 6,500 FOOTCANDLES AND SHALL BE PROVIDED WITH AN ADJUSTABLE TIME DELAY AND ADJUSTABLE DEAD BAND SETTINGS.
       2) AUTOMATIC DIMMING DAYLIGHTING CONTROLS SHALL BE PROVIDED TO CONTINUOUSLY DIM SELECTED FIXTURES/LAMPS UP AND DOWN BASED UPON LIGHTING LEVELS PRESENT IN THE CONTROLLED SPACE. THE SENSOR SHALL UTILIZE AN INTERNAL PHOTO DIODE TO MEASURE AMBIENT LIGHT LEVELS. 0-10 VOLT DIMMING CONTROLS SHALL RANGE FROM 0.2 VOLTS TO 10 VOLTS, WITH AMBIENT LIGHTING SET POINTS FROM 1-6,500 FOOTCANDLES.
       3) AUTOMATIC DAYLIGHTING CONTROLS SHALL BE CONNECTED TO CONTROL UNITS TO PERFORM THE FIXTURE SWITCHING/DIMMING REQUIREMENTS INDICATED BY THE DRAWINGS – CONNECTIONS DIRECTLY TO A BALLAST ARE NOT ALLOWED.
       4) DAYLIGHT SENSOR SHALL PROVIDE CONTROLS FOR UP TO THREE DISTINCT LIGHTING ZONES TO ALLOW SEPARATE CONTROL OF PRIMARY DAYLIT, SECONDARY DAYLIT, AND SKYLIT ZONES.
    h. PROVIDE CONTROL UNITS AND SYSTEM FUNCTIONALITY AS FOLLOWS:
       1) CONTINUOUS DIMMING CONTROLS: SYSTEM-BASED WALL OR CEILING MOUNTED OCCUPANCY SENSORS (CONTINUOUS DIMMED – AUTO ON 50%/MANUAL ON 100%) SHALL BE PROVIDED WITH CONTROL UNITS TO PERFORM THE FIXTURE DIMMING REQUIREMENTS INDICATED BY THE BALLAST AND FIXTURE TYPE. SWITCH LEG(S) ASSOCIATED OUTSIDE THE PARENTHESIS TO BE CONFIGURED AS "AUTO ON 50%/MANUAL ON 100%" FOR CONTINUOUS DIMMED. SWITCH LEGS INSIDE PARENTHESIS INDICATES A MANUAL ACTION REQUIRED TO INCREASE LIGHTING LEVELS ABOVE 50%. CONTROL UNITS WITH INTEGRAL TRANSFORMERS SHALL BE UTILIZED TO PROVIDE POWER TO OCCUPANCY SENSORS AND OTHER CONTROL DEVICES. CONTROL UNITS SHALL BE LOCATED WITHIN JUNCTION BOXES AND NOT EXPOSED IN THE CEILING SPACE. CONTROL UNIT SHALL BE 120/277 VOLT RATED WITH NO MINIMUM LOAD, COMPATIBLE WITH ALL THE SPECIFIED BALLASTS, PROVIDED WITH A NEUTRAL CONNECTION (NO LEAKAGE TO GROUND) AND NO LEAKAGE TO LOAD IN THE "OFF" MODE. ADDITIONAL RELAY ZONES MAY BE REQUIRED FOR THE ADDITION OF PRIMARY DAYLIT, SECONDARY DAYLIT, AND PRIMARY SKYLIT UTILIZING THE SAME CONTROL CHANNEL. (I.E. EVEN THOUGH A SINGLE LETTER "a" IS INDICATED AT THE PRIMARY SENSOR), ADDITIONAL RELAYS WOULD BE REQUIRED FOR THE "a+" (PRIMARY SIDELIT DAYLIT ZONE), "a++" (SECONDARY SIDELIT DAYLIT ZONE), AND "a*" (SKYLIT DAYLIT ZONE). WHERE MORE THAN ONE CIRCUIT PER SWITCH LEG/CONTROL ZONE IS REQUIRED, PROVIDE ADDITIONAL FULL FEATURE CONTROL UNITS AS REQUIRED.
       2) WHERE ADDITIONAL 120/ 277 VOLT DEVICES, RECEPTACLES, OR BRANCH CIRCUITS ARE BEING CONTROLLED BY THE ROOM CONTROLLER, AN ADDITIONAL CONTROL UNIT SHALL BE PROVIDED AS REQUIRED.
       3) THE OCCUPANCY SENSOR CONTROLLED RECEPTACLE BRANCH CIRCUIT RELAY, CONNECTED TO THE SPACE'S DISTRIBUTED LIGHTING CONTROL OCCUPANCY SENSOR RELAY, SHALL TURN ON WHEN THE ROOM IS OCCUPIED, REGARDLESS OF THE CONFIGURATION OF THE LIGHTING CONTROL STATE – I.E. AUTO ON/MANUAL ON. SEE THE DISTRIBUTED LIGHTING CONTROL SPECIFICATION FOR MORE INFORMATION. EVEN THOUGH A SINGLE SYMBOL IS INDICATED, MULTIPLE RELAYS MAY BE REQUIRED TO CONTROL THE REQUIRED NUMBER OF SWITCHLEGS/CIRCUITS.
       4) LOW VOLTAGE WALL CONTROLS SHALL BE DECORA STYLE, LOW-VOLTAGE, MOMENTARY SWITCHES WITH COLOR TO MATCH OTHER WALL DEVICES/SWITCHES. LOWER CASE LETTERS INDICATE SWITCHING CONFIGURATION. PROVIDE SWITCHING OR DIMMING CONTROL DEVICES AS REQUIRED BY DRAWINGS.

       DIMMING – NUMBER OF SWITCHES AS REQUIRED – 4 ZONES/YOKE MAX. EACH CONTROL ZONE TO HAVE A DEDICATED RAISE AND LOWER BUTTONS. FACTORY STANDARD COLOR BY ARCHITECT. EACH MULTI-ZONE DIMMING CONTROL STATION SHALL BE PROVIDED WITH MASTER ON AND MASTER OFF BUTTON IN ADDITION TO THE INDIVIDUAL CONTROL ZONE BUTTONS.

       WHERE INDICATED, PROVIDE VANDAL RESISTANT, HIGH ABUSE SWITCH CONNECTED TO THE DLCS INPUT/OUTPUT INTERFACE DEVICE FOR ON/ OFF AND DIMMING CONTROLS. SWITCHES LOCATED IN HIGH ABUSE AREAS (EXTERIOR AREAS OR AREAS SUBJECT TO WASH-DOWN ETC.) OR IDENTIFIED ON PLANS AS HIGH-ABUSE SWITCHES SHALL BE VANDAL RESISTANT, STAINLESS STEEL, TOUCH SENSITIVE AND AVAILABLE WITH UP TO TWO BUTTONS IN A SINGLE GANG. EACH HIGH ABUSE SWITCH SHALL BE ABLE TO BE PROGRAMMED FOR ON, OFF, TOGGLE OR MAINTAIN OPERATION. SWITCHES MUST BE CAPABLE OF HANDLING ELECTROSTATIC DISCHARGES OF AT LEAST 30,000 VOLTS (10MSPARK) WITHOUT ANY INTERRUPTION OR FAILURE IN OPERATION.

       WHERE INDICATED, PROVIDE A LOCKING SINGLE POLE SWITCH CONNECTED TO THE ROOM CONTROLLER VIA A INPUT/OUTPUT INTERFACE DEVICE FOR ON/OFF CONTROLS. DIRECT CONNECTION OF THE KEYED SWITCH ON THE LOAD SIDE OF THE CONTROLLER IS PROHIBITED. PROVIDE AT LEAST THREE (3) KEYS TO OWNER AT CONCLUSION OF PROJECT. ADJACENT SWITCH SHALL ONLY BRING LIGHTS FULL ON. KEYED SWITCH ALLOWS MANUAL OFF FUNCTIONALITY. DIMMER SWITCH ALLOWS AUTO-ON 50% OVERRIDE TO 100% ALL-ON AND SHALL NOT ALLOW LIGHTING LEVELS TO DECREASE IN ANY WAY.
    i. WHEN LIGHTING SYSTEM IS INDICATED WITH A CONNECTION TO A REMOTE EMERGENCY POWER SOURCE (I.E. AN INVERTER OR GENERATOR) PROVIDE UL924 LISTED INTERFACE EQUIPMENT TO ALLOW THE OVERRIDE OF THE LOCAL SWITCHING AND/OR DIMMING CONTROLS DURING A POWER OUTAGE.
    j. WHEN LIGHTING FIXTURES/CONTROLS ARE PROVIDED WITH LUTRON 3-WIRE DIMMING BALLASTS, AN INTERFACE DEVICE SHALL BE PROVIDED TO ALLOW 0-10V CONTROL OF LUTRON 3-WIRE DIMMING BALLASTS. MOUNT INTERFACE IN A NEMA1 ENCLOSURE IN ACCESSIBLE CEILING SPACE ADJACENT TO ITS ASSOCIATED CONTROL UNIT.
    k. WHEN LIGHTING FIXTURES/CONTROLS ARE LINE VOLTAGE DIMMED OR PROVIDED ELECTRONIC LOW-VOLTAGE, MAGNETIC LOW-VOLTAGE, NEON/COLD CATHODE, LUTRON "TU-WIRE" DIMMING BALLASTS, AN INTERFACE DEVICE SHALL BE PROVIDED TO ALLOW LINE VOLTAGE CONTROL. MOUNT INTERFACE IN A NEMA1 ENCLOSURE IN ACCESSIBLE CEILING SPACE ADJACENT TO ITS ASSOCIATED CONTROL UNIT.
    l. WHEN AV SYSTEM INTERFACE IS INDICATED, PROVIDE TWO-WAY CAPABLE RS-232 COMMUNICATIONS INTERFACE TO ALLOW AV CONTROL SYSTEM TO CALL ADDRESSABLE LIGHTING/ROOM SCENES. COMMUNICATIONS INTERFACE SHALL PROVIDE FEEDBACK TO THE AV CONTROL SYSTEM FOR LIGHT LEVEL STATUS.
    m. WHEN MOVEABLE PARTITION INTERFACE IS INDICATED, PROVIDE ALL COMPONENTS, SENSORS, WIRING, POWER SUPPLIES AND PROGRAMMING NECESSARY TO MONITOR AND REPORT MOVEABLE PARTITION(S) OPEN/CLOSED STATUS. DLCS SYSTEM SHALL AUTOMATICALLY ADOPT SINGLE ROOM OR MULTI-ROOM CONTROL PROFILES AS REQUIRED BY PARTITION STATUS.
    n. WHEN NETWORKED LIGHTING CONTROL RELAY PANEL(S) ARE INDICATED, PROVIDE ALL COMPONENTS, WIRING, AND PROGRAMMING NECESSARY TO INTEGRATE RELAY PANELS WITHIN THE DLCS SYSTEM.
13. GENERAL SYSTEM REQUIREMENTS:
    a. ALL EQUIPMENT SHALL FEATURE A PRE-SET DEFAULT OPERATION. UPON INITIAL POWER UP, THE SYSTEM SHALL AUTOMATICALLY IDENTIFY THE DEVICES ON THE LOCAL NETWORK, THEN ENTERS THE PRE-SET CONFIGURATION TO ALLOW BASIC OPERATION OF ALL DEVICES. IN MOST APPLICATIONS THE RELATIONSHIP BETWEEN QUANTITY OF LOADS, SWITCHES AND OCCUPANCY SENSORS WILL NOT REQUIRE ANY ADJUSTMENTS – ALTHOUGH AN ADJUSTMENT TO THE AUTOMATIC SETTINGS SHALL BE INCLUDED IN THE BASE BID.
    b. ALL EQUIPMENT SHALL FEATURE A CONFIGURATION (CONFIG) BUTTON ON MOST DEVICES THAT ALLOWS EASY ACCESS TO THE INTEGRATED AUTO-CONFIGURATION TECHNOLOGY TO MODIFY SYSTEM OPERATION. FUNCTIONALITY OF THE CONFIG BUTTON SHALL BE STANDARDIZED THROUGHOUT THE PRODUCT LINE, AS IS THE OPERATION OF THE CONFIG LED INDICATORS.
    c. NETWORK DLCS SYSTEM CONTROL/CONFIGURATION SOFTWARE SHALL BE PRE-CONFIGURED TO THE MAXIMUM EXTENT POSSIBLE OFF-SITE AT THE DLCS FACTORY OR ENGINEERING FACILITY. THE CONTRACTOR SHALL DOCUMENT EVERY NETWORK COMPONENT'S LOCATION (ROOM AND FLOOR NUMBER) AND ITS' RESPECTIVE SERIAL NUMBER OR OTHER DEVICE IDENTIFIER ON A FULL SIZE FLOOR PLAN IN PDF FORMAT. HANDWRITTEN DOCUMENTATION IS UNACCEPTABLE. THE PREFERRED ACCEPTABLE METHOD OF NETWORK COMPONENT DOCUMENTATION IS COLLECTION OF FACTORY-PROVIDED, SELF-ADHESIVE, BAR-CODE IDENTIFIERS DESIGNED TO BE REMOVED FROM NETWORK COMPONENTS AS THEY ARE INSTALLED IN THE FIELD. BAR CODES IDENTIFIERS SHALL BE APPLIED TO A PAPER COPY OF A FLOOR PLAN WHICH SHALL BE PROVIDED TO THE FACTORY FOR USE IN OFF-SITE DLCS NETWORK PROGRAMMING AND CONFIGURATION. THE RESULTS OF EITHER METHOD SHALL BE SCANNED AND SUBMITTED AS A PART OF THE PROJECT CLOSEOUT DOCUMENTATION.
    d. NETWORK SYSTEMS SHALL BE INSTALLED BY VENDOR-CERTIFIED CONTRACTOR FIELD PERSONNEL TO PERFORM NETWORK INSTALLATIONS INCLUDING ACCURATE, REPEATABLE COMMUNICATIONS CABLING TERMINATIONS (BOTH LAN AND MS/TP TYPE). INCLUDE CERTIFICATES FOR EACH CERTIFIED INSTALLER TO BE UTILIZED ON THE PROJECT AS A PART OF THE PROJECT SUBMITTALS. A CERTIFIED FIELD INSTALLER SHALL BE ON-SITE SUPERVISING COMMUNICATIONS CABLING AND CABLING TERMINATIONS AT ALL TIMES WHEN THIS WORK IS OCCURRING ON THE PROJECT.
    e. ANY BATTERY-POWERED DLCS COMPONENTS SHALL BE PROVIDED WITH A 10 YEAR EXPECTED BATTERY LIFE. EACH COMPONENT SHALL BE PROVIDED WITH BOTH A LOCAL LOW BATTERY INDICATION ON EACH DEVICE AND A SOFTWARE-BASED LOW BATTERY ALARM. WHERE A WIRELESS DLCS SYSTEM COMPONENT IS AVAILABLE EITHER AS A BATTERY POWERED DEVICE OR A LINE/LOW VOLTAGE POWERED DEVICE, PROVIDE THE LINE/LOW VOLTAGE VERSION ALONG WITH ANY LINE OR LOW VOLTAGE WIRING, CONDUIT AND BACK BOXES TO LIMIT THE NUMBER OF BATTERIES WITHIN THE DLCS INSTALLATION TO A MINIMUM.
14. INSTALLATION OF CONTROL UNITS, OCCUPANCY/VACANCY SENSORS AND DAYLIGHTING CONTROLS:
    a. IT SHALL BE THE CONTRACTOR'S RESPONSIBILITY TO LOCATE AND AIM SENSORS IN THE CORRECT LOCATION REQUIRED FOR COMPLETE AND PROPER VOLUMETRIC COVERAGE PER THE MANUFACTURER'S RECOMMENDATIONS. ROOMS SHALL HAVE NINETY (90) TO ONE HUNDRED (100) PERCENT COVERAGE AND SHALL ACCOMMODATE ALL HABITS OF SINGLE OCCUPANTS WHILE OCCUPYING THE SPACE WITHIN THE ROOM. THE LOCATIONS AND QUANTITIES OF SENSORS SHOWN ON THE DRAWINGS ARE DIAGRAMMATIC AND INDICATE ONLY THE ROOMS THAT ARE TO BE PROVIDED WITH SENSORS. THE CONTRACTOR SHALL PROVIDE ADDITIONAL SENSORS AS REQUIRED TO PROPERLY SENSE OCCUPANCY WITHIN EACH RESPECTIVE ROOM. WHERE PIR-ONLY WIRELESS CEILING OR FIXTURE-INTEGRAL OCCUPANCY SENSORS ARE UTILIZED, PROVIDE QUANTITY AS REQUIRED TO MAINTAIN THE SAME COVERAGE AND SAME MOVEMENT DETECTION SENSITIVITY AS PROVIDED BY WIRED DUAL TECHNOLOGY SENSORS. ADDITIONALLY, IT MAY BE NECESSARY FOR THE CONTRACTOR TO MAKE ADJUSTMENTS, CHANGE THE LOCATION OR TYPE OF SENSOR TO OBTAIN PROPER OPERATION IN A SPECIFIC ROOM. THE USE OF FACTORY-SUPPLIED INTERNAL MASKING (PIR) SHALL BE PROVIDED/INSTALLED AS REQUIRED TO LIMIT DETECTION TO THE CONTROLLED SPACE ONLY. WHERE MASKING IS NOT AVAILABLE AS A FACTORY-SUPPLIED ITEM, ALTERNATE FACTORY-SUPPLIED MEANS OF COMPLIANCE OR METHODS MAY BE ACCEPTABLE. THE CONTRACTOR SHALL HAVE FINAL RESPONSIBILITY FOR PROPER OPERATION OF THE SYSTEM IN EACH ROOM AND SHOULD THEREFORE MAKE LABOR ALLOWANCES FOR CHANGES AND ADJUSTMENTS.
    b. CEILING MOUNTED SENSORS SHOULD BE LOCATED IN THE SPACE TO BE COVERED, A MINIMUM OF 4', PREFERABLY 5', AWAY FROM THE LATCH SIDE OF THE DOOR, 2" TO 3" AWAY FROM THE WALL AND 3' TO 4' FROM AN AIR SUPPLY REGISTER. DO NOT MOUNT SENSORS OVER A DOORWAY OR BEHIND A FULL HEIGHT DOOR. SENSORS SHALL BE AIMED IN THE DIRECTION OF THE SPACE TO BE COVERED. DO NOT AIM SENSORS TOWARD A DOORWAY. THE USE OF FACTORY SUPPLIED INTERNAL MASKING (PIR) SHALL BE PROVIDED/INSTALLED AS REQUIRED TO LIMIT DETECTION TO THE CONTROLLED SPACE ONLY.
    c. ALL SENSORS SHALL BE ADJUSTED PER THE DLCS SOO/ZONE SCHEDULE. WHERE A ROOM TYPE IS NOT INDICATED ON THE DLCS SOO, ADJUST FOR FOR A TIME DELAY OF TWENTY (20) MINUTES.
    d. EACH DAYLIGHTING CONTROL SYSTEM/ZONE SHALL BE INSTALLED/ADJUSTED AS FOLLOWS:
       1) AUTOMATIC SWITCHING/DIMMING CONTROL PLACEMENT: IT IS IMPORTANT TO SELECT A LOCATION IN THE DAYLIGHTING ZONE WHERE

AREA TYPE	OCC SENSOR					INTERIOR DAYLIGHT SENSOR			EXTERIOR PHOTOCELL		ASTRONOMICAL TIME CLOCK CONTROLS			LOCAL CONTROL			SYSTEM		NOTES	REMARKS
	AUTO ON (PERCENTAGE OF NOMINAL FC)	MANUAL ON (WHEN SWITCH/ BUTTON IS PRESSED)	REDUCED OUTPUT OR OFF	REDUCED OUTPUT OR OFF DURING NORMAL HOURS	REDUCED OUTPUT OR OFF AFTER NORMAL HOURS	AUTO OFF AT TARGET FC FIXTURES DIM TO OFF	AUTO DIM AT TARGET FC FIXTURES REMAIN ON AT LOWEST LEVEL	TARGET ILLUMINATION LEVEL NOMINAL FOOTCANDLE & METER HEIGHT	EXTERIOR PHOTOCELL ON	EXTERIOR PHOTOCELL OFF	BEGIN NORMAL OPERATING HOURS (ASTRONOMICAL TIME CLOCK TURN ON)	END NORMAL OPERATING HOURS (ASTRONOMICAL TIME CLOCK TURN OFF)	AFTER NORMAL HOURS OVERRIDE CANNOT EXCEED 2 HOURS PER §130.1(c)3.B	ON / OFF	ON / OFF / RAISE / LOWER DIMMING	SCENE SELECTOR	PLUG LOAD CONTROL	DEMAND RESPONSE LIGHTING REDUCTION MIN. 15% COMMERCIAL BLDG >10,000 SQ FT	PROGRAMMING NOTES PLEASE SEE BELOW	
ALL VALUES ARE BASED ON CALIFORNIA TITLE 24 2019																				PLEASE REFER TO SPECIFICATIONS FOR ADDITIONAL INFORMATION. O = INDICATES OPTIONAL COMPLIANCE, NOT REQ'D. ● = INDICATES REQUIRED COMPLIANCE ALL LIGHTING WITHIN DAYLIGHTING ZONES SHALL BE COMMISSIONED AT NIGHT, WITH NO DAYLIGHT CONTRIBUTION, IN ORDER TO ESTABLISH BASELINE ILLUMINATION LEVELS. "NORMAL HOURS" REFERS TO OWNER-DETERMINED OPERATING HOURS. "AFTER HOURS" REFERS TO ANY TIME PERIOD BEFORE OR AFTER OWNER-DETERMINED OPERATING HOURS. WHERE EXTERIOR PHOTOCELL CONTROL IS INDICATED, PLEASE PROVIDE EXTERIOR NORTH FACING DAYLIGHT SENSOR.
Interior Lighting																				
CLOSET	ON AT 100%	ON AT 100%	OFF AFTER 5 MIN.	-	-	-	-	-	-	-	-	-	-	●	-	-	-	-	-	§130.1(b) EXCEPTION 1 - AN AREA ENCLOSED BY CEILING HEIGHT PARTITIONS THAT HAS ONLY ONE LUMINAIRE WITH NO MORE THAN TWO LAMP DOES NOT REQUIRE MULTI-LEVEL CONTROLS.
ELECTRICAL ROOM, MECHANICAL ROOM, TELECOMMUNICATIONS ROOM	-	-	-	-	-	-	-	'10 FC +5' AFF	-	-	-	-	-	●	-	-	-	-	-	LOCAL TOGGLE SWITCH ONLY
OFFICE, SMALL ≤250 SQ FT	ON AT 70%	ON AT 100%	OFF AFTER 20 MIN.			○	●	40-50 FC +30" AFF	-	-	-	-	-		●	○	●	●	A,B,D,F	
RESTROOMS (2) OR MORE STALLS	ON AT 100%	-	5 MIN. TO OFF	-	-	-	-	20-30 FC	-	-	-	-	-	●	-	-	-	-	-	§130.1(b) EXCEPTION 2 - DIMMABLE LUMINAIRES NOT REQUIRED. §130.1(c)5 - [DUAL MODE] OCCUPANCY SENSORS REQUIRED. §130.1(a)1 EXCEPTION 1 - MANUAL CONTROL MAY BE LOCATED IN A SEPARATE, SECURED LOCATION.
RESTROOMS (1) STALL	ON AT 100%	-	5 MIN. TO OFF	-	-	-	-	20-30 FC	-	-	-	-	-	●	-	-	-	-	-	§130.1(b) EXCEPTION 2 - DIMMABLE LUMINAIRES NOT REQUIRED. §130.1(c)5 - OCCUPANCY SENSORS REQUIRED. §130.1(a) - PROVIDE MANUAL AREA CONTROL IN RESTROOM.
Exterior Lighting, Timeclock / Photocell Control																				
EXTERIOR LIGHTING >24 FT TALLER THAN 24 FT	-	-	-	-	-	-	-	-	●	-	PERIOD 1: ON 100% AT DUSK - PERIOD 2: DIM 80% AT 24:00	OFF AT DAWN	●	-	-	-	-	-	J, L, M	§130.2(c) LIGHTS SHALL BE OFF DURING DAYTIME; LIGHTS SHALL BE AUTOMATICALL CONTROLLED BY TIME-BASED SCHEDULING CONTROLS. §130.2(c)2B - AUTOMATIC SCHEDULING CONTROLS SHALL ALLOW SCHEDULING OF MIN. OF TWO NIGHTTIME PERIODS WITH INDEPENDENT LIGHTING LEVELS.... OCCUPANCY SENSOR NOT REQUIRED
EXTERIOR LIGHTING ≤24 FT & >40W 24 FT OR SHORTER 40W OR MORE	ON AT 100%	ON AT 100%	PERIOD 1: 50% 10 MIN. PERIOD 2: 40% 10 MIN.	-	-	-	-	-	●	-	PERIOD 1: ON 100% AT DUSK - PERIOD 2: DIM 40% AT 24:00	OFF AT DAWN	●	-	-	-	-	-	B,J, M	§130.2(c) LIGHTS SHALL BE OFF DURING DAYTIME; LIGHTS SHALL BE AUTOMATICALL CONTROLLED BY TIME-BASED SCHEDULING CONTROLS. §130.2(c)2B - AUTOMATIC SCHEDULING CONTROLS SHALL ALLOW SCHEDULING OF MIN. OF TWO NIGHTTIME PERIODS WITH INDEPENDENT LIGHTING LEVELS.... §130.2(c)3Di - FACADE, ORNAMENTAL HARDSCAPE, OUTDOOR DINING AND SALES FRONTAGE LIGHTING ARE EXEMPT FROM MOTION SENSOR REQUIREMENT. OCCUPANCY SENSOR REQUIRED; LIGHTING SHALL REMAIN ON FROM DUSK UNTIL DAWN, REDUCED OUTPUT BETWEEN 40% AND 80% WHEN VACANT OR AFTER LOCAL CURFEW, IF REQUIRED. NO MORE THAN 1,500W OF LIGHTING CONTROLLED TOGETHER.
EXTERIOR LIGHTING ≥24 FT & <40W 24 FT OR SHORTER 40W OR LESS	-	-	-	-	-	-	-	-	●	●	PERIOD 1: ON 100% AT DUSK - PERIOD 2: DIM 50% AT 24:00	OFF AT DAWN	●	-	-	-	-	-	J,L,M	§130.2(c) LIGHTS SHALL BE OFF DURING DAYTIME; LIGHTS SHALL BE AUTOMATICALL CONTROLLED BY TIME-BASED SCHEDULING CONTROLS. §130.2(c)2B - AUTOMATIC SCHEDULING CONTROLS SHALL ALLOW SCHEDULING OF MIN. OF TWO NIGHTTIME PERIODS WITH INDEPENDENT LIGHTING LEVELS.... §130.2(c)3 - LUMINAIRES WITH A MAXIMUM RATED WATTAGE OF 40W EACH ARE NOT REQUIRED TO HAVE MOTION SENSING CONTROLS.
EXTERIOR FAÇADE & OUTDOOR DINING	-	-	-	-	-	-	-	-	●	●	PERIOD 1: ON 100% AT DUSK - PERIOD 2: DIM 50% AT 02:30	OFF AT DAWN	●	-	-	-	-	-	J,L,M	§130.2(C) LIGHTS SHALL BE OFF DURING DAYTIME; LIGHTS SHALL BE AUTOMATICALLY CONTROLLED BY TIME-BASED SCHEDULING CONTROLS. §130.2(c) 3 NO MORE THAN 1,500W OF LIGHTING CONTROLLED FROM A SINGLE SENSOR. §130.2(c)3Di - EXTERIOR FACADE & OUTDOOR DINIUNG ARE EXEMPT FROM MOTION SENSOR REQUIREMENT.
EXTERIOR SIGNAGE	-	-	-	-		-	-	-	●	-	ON AT DUSK	OFF AT DAWN	-	-	-	-	-	-	J	§130.3(a)2 PHOTO CONTROL PLUS TIME SWITCH OR ASTRONOMICAL CLOCK ARE REQ'D; SIGNS ILLUMINATED 24/7/365 MUST DIM MIN. 65% DURING DAYLIGHT HOURS

PROGRAMMING NOTES

NOTES: A. PROVIDE DAYLIGHTING CONTROL FOR PRIMARY AND SECONDARY DAYLIT OR SKYLIT ZONES WERE REQUIRED. DAYLIGHTING IS NOT NECESSARY WHEN AREAS DO NOT INCLUDE SKYLIGHTS OR GLAZING < 24 SQ FT OR SKYLIT+PRIMARY SIDELIT ZONE IS LESS THAN 120W. LUMINAIRES IN OR AT LEAST 50% WITHIN DAYLIGHTING ZONES MUST BE CONTROLLED.

B. CONTROLLED BY OCCUPANCY SENSOR: AUTO AND / OR MANUAL ON UNLESS OVERRIDDEN BY DAYLIGHTING SENSORS.

C. MANUAL CONTROL WALL STATIONS FOR THESE AREAS SHALL BE LOCATED IN THE NEAREST BACK OF HOUSE CLOSET, CONTROL BOOTH, ELECTRICAL ROOM, ETC. TO PREVENT UNAUTHORIZED USERS FROM ADJUSTING LIGHTING LEVELS.

D. CONFIGURE LIGHTING CONTROL TO PROVIDE PROPORTIONATE RAISE / LOWER OF ALL ROOM LIGHTING TOGETHER, REGARDLESS OF LOCATION IN DAYLIGHTING AND NON-DAYLIGHTING ZONES WHERE THEY OCCUR.
E. PROVIDE RS-232 OR ETHERNET CONNECTION TO AV SYSTEM TO ALLOW RECALL OF LIGHTING PRESETS BY AV SYSTEM WITHIN THIS ROOM, IF REQUESTED BY OWNER.
F. PROVIDE CONTROLLED RECEPTACLES IN THIS ROOM AS REQUIRED. CONTROLLED RECEPTACLE MUST BE WITHIN 6'-0" OF UNCONTROLLED RECEPTACLE.
G. PROVIDE MOMENTARY CONTACT CLOSURE FROM FACP TO FORCE ALL LIGHTING IN THIS AREA TO 100% DURING AN ALARM EVENT. AUTOMATICALLY RESTORE LIGHTING TO NORMAL WHEN EVENT HAS CLEARED.
H. LIGHTING IN THIS SPACE MAY BE CONTROLLED FROM A STAGE LIGHTING SYSTEM. THE STAGE LIGHTING SYSTEM SHALL BE PROVIDED WITH A TITLE 24 COMPLIANT LIGHTING CONTROL PROCESSOR AND COMPATIBLE OCCUPANCY AND DAYLIGHT SENSORS AS REQUIRED FOR
I. NOT USED
J. CONFIRM OPERATING HOURS WITH OWNER PRIOR TO FINAL PROGRAMMING.
K. REQUIRES CONNECTION TO BUILDING AUTOMATION SYSTEM (BAS) WHEN SUCH SYSTEM IS PRESENT.
L. FIXTURES WITHOUT OCCUPANCY SENSORS SHALL HAVE LOW END TRIM ADJUSTED TO MAINTAIN MINIMUM ILLUMINATION LEVELS.
M. LIGHTING CONTROL SYSTEM SHALL HAVE ASTRONOMICAL TIME CLOCK AND DUAL MODE CAPABILITY FOR "AFTER HOURS" CONTROL OF LIGHTING.
N. PERFORMANCE SPACE, NO DAYLIGHTING REQUIRED. TARGET ILLUMINATION LISTED ONLY FOR REFERENCE IN THIS COLUMN.

IDENTIFICATION STAMP
DIV. OF THE STATE ARCHITECT
APP: 03-122664 INC:
REVIEWED FOR
SS ☑ FLS ☑ ACS ☑
DATE: 05/12/2023

pjhm architects
LICENSED ARCHITECT RICHARD W. SHARPE NO. C15585 REN. 02/25 STATE OF CALIFORNIA
tk|sc COLLABORATIVE
11870 Pierce Street, Suite 160
Riverside, California 92505
951.299.4160 www.tk1sc.com
Project Leader - Nikolas Bruno
Electrical Lead - Nikolas Bruno
tk1sc Job #: B2202744.000
REGISTERED PROFESSIONAL ENGINEER RICHARD W. SHARPE No. E15610 DEC 31, 2024 ELECTRICAL STATE OF CALIFORNIA
OC Office: 24461 Ridge Route Drive #100, Laguna Hills, CA • 92653 Phone: 949.496.6161 SD Office: 804 Pier View Way #103, Oceanside, CA • 92054 Phone: 760.730.5557 LA Office: 837 Traction Avenue, #410, Los Angeles, CA • 90013 Phone: 213.278.0172 Web: pjhm.com

HIGHLAND HIGH SCHOOL
50M POOL & AQUATICS CENTER
KERN HIGH SCHOOL DISTRICT

DISTRIBUTED LIGHTING CONTROL SOO

E-7.3

8/2/2022 11:34:37 AM

STATE OF CALIFORNIA
Indoor Lighting
NRCC-LTI-E
CALIFORNIA ENERGY COMMISSION

CERTIFICATE OF COMPLIANCE		NRCC-LTI-E
This document is used to demonstrate compliance with requirements in §110.9, §110.12(c), §130.0, §130.1, §140.6 and §141.0(b)2 for indoor lighting scopes using the prescriptive path.		
Project Name:	Highland HS 50M Pool and Aquatics Center	**Report Page:** (Page 1 of 7)
Project Address:	39055 25th St W	**Date Prepared:** 8/17/2022

A. GENERAL INFORMATION

01	Project Location (city)	Palmdale	04	Total Conditioned Floor Area (ft²)	3,195
02	Climate Zone	14	05	Total Unconditioned Floor Area (ft²)	0
03	Occupancy Types Within Project (select all that apply):		06	# of Stories (Habitable Above Grade)	1

● Classroom ● Office ● Support Areas ● : See Table I

B. PROJECT SCOPE

This table includes any lighting systems that are within the scope of the permit application and are demonstrating compliance using the prescriptive path outlined in §140.6 or §141.0(b)2 for alterations.

Scope of Work	Conditioned Spaces		Unconditioned Spaces	
01	02	03	04	05
My Project Consists of (check all that apply):	Calculation Method	Area (ft²)	Calculation Method	Area (ft²)
☒ New Lighting System	Area Category Method	3195	Area Category Method	0
☐ New Lighting System - Parking Garage				
Total Area of Work (ft²)	3195		0	

C. COMPLIANCE RESULTS

If any cell on this table says "DOES NOT COMPLY" or "COMPLIES with Exceptional Conditions" refer to Table D_ for guidance.

Lighting in conditioned and unconditioned spaces must not be combined for compliance per §140.6(b)1	Allowed Lighting Power per §140.6(b) (Watts)						Adjusted Lighting Power per §140.6(a) (Watts)					Compliance Results
	01	02	03	04	05		06	07		08		09
	Complete Building §140.6(c)1	Area Category §140.6(c)2	Area Category Additional §140.6(c)2G (+)	Tailored §140.6(c)3 (+)	**Total Allowed** (Watts)		Total Designed (Watts)	Adjustments PAF Lighting Control Credits §140.6(a)2 (-)		**Total Adjusted** (Watts) *Includes Adjustments		**05 must be >= 08 §140.6**
	(See Table I)	(See Table I)	(See Table J)	(See Table K)			(See Table F)	(See Table P)				
Conditioned		2,012.4	0		2,012	≥	1,042	0	=	1042		COMPLIES
Unconditioned						≥			=			

Registration Number: | Registration Date/Time: | Registration Provider: Energysoft

CA Building Energy Efficiency Standards - 2019 Nonresidential Compliance | Report Version: 2019.1.003 Schema Version: rev 20200601 | Report Generated: 2022-08-17 15:55:38

STATE OF CALIFORNIA
Indoor Lighting
NRCC-LTI-E
CALIFORNIA ENERGY COMMISSION

CERTIFICATE OF COMPLIANCE		NRCC-LTI-E
Project Name:	Highland HS 50M Pool and Aquatics Center	**Report Page:** (Page 2 of 7)
Project Address:	39055 25th St W	**Date Prepared:** 8/17/2022

C. COMPLIANCE RESULTS

Controls Compliance (See Table H for Details)	COMPLIES
Rated Power Reduction Compliance (See Table Q for Details)	

D. EXCEPTIONAL CONDITIONS

This table is auto-filled with uneditable comments because of selections made or data entered in tables throughout the form.

E. ADDITIONAL REMARKS

This table includes remarks made by the permit applicant to the Authority Having Jurisdiction.

F. INDOOR LIGHTING FIXTURE SCHEDULE

This table includes all permanent designed lighting and all portable lighting in offices.

Designed Wattage: Conditioned Spaces

01	02	03	04	05	06	07	08	09	10	
Name or Item Tag	Complete Luminaire Description	Modular (Track) Fixture	Small Aperture & Color Change[1]	Watts per luminaire[2]	How is Wattage determined	Total Number of Luminaires	Excluded per §140.6(a)3	Design Watts	Field Inspector	
									Pass	Fail
2	2 - 4' LONG X 4"WIDE, LINEAR LED FIXTURE	No	No	23.5	Mfr. Spec	16	No	376	☐	☐
3	3 - RECESSED FIXED DOWNLIGHT	No	No	28	Mfr. Spec	1	No	28	☐	☐
6	6 - 4" WIDE RECESSED LED LINEAR FIXTURE	No	No	22	Mfr. Spec	29	No	638	☐	☐
					Total Designed Watts: CONDITIONED SPACES			1,042		

[1]*FOOTNOTE: Design Watts for small aperture and color changing luminaires which qualify per §140.6(a)4B is adjusted to be 75% of their rated wattage. Table F automatically makes this adjustment, the permit applicant should enter full rated wattage in column 05.*

[2]*Authority Having Jurisdiction may ask for Luminaire cut sheets to confirm wattage used for compliance per §130.0(c) Wattage used must be the maximum rated for the luminaire, not the lamp.*

Registration Number: | Registration Date/Time: | Registration Provider: Energysoft

CA Building Energy Efficiency Standards - 2019 Nonresidential Compliance | Report Version: 2019.1.003 Schema Version: rev 20200601 | Report Generated: 2022-08-17 15:55:38

STATE OF CALIFORNIA
Indoor Lighting
NRCC-LTI-E
CALIFORNIA ENERGY COMMISSION

CERTIFICATE OF COMPLIANCE		NRCC-LTI-E
Project Name:	Highland HS 50M Pool and Aquatics Center	**Report Page:** (Page 3 of 7)
Project Address:	39055 25th St W	**Date Prepared:** 8/17/2022

G. MODULAR LIGHTING SYSTEMS

This section does not apply to this project.

H. INDOOR LIGHTING CONTROLS (Not including PAFs)

*This table includes lighting controls for conditioned and unconditioned spaces. When a control having a * is shown, the notes section of this table provides more detail on how compliance is achieved. The lighting controls section of the Compliance Summary Table on the first page will show "DOES NOT COMPLY" if the notes are left blank.*

Building Level Controls

01	02	03	
Mandatory Demand Response §110.12(c)	Shut-off controls §130.1(c)	Field Inspector	
		Pass	Fail
Required > 10,000 SF	Whole Building Auto Time Switch	☐	☐

Area Level Controls

04	05	06	07	08	09	10	11	12	
Area Description	Complete Building or Area Category Primary Function Area	Area Controls §130.1(a)	Multi-Level Controls §130.1(b)	Shut-Off Controls §130.1(c)	Primary/Sky lit Daylighting §130.1(d)	Secondary Daylighting §140.6(d)	Interlocked Systems §140.6(a)1	Field Inspector	
								Pass	Fail
Storage	All Other Space Types	Manual ON/OFF	Dimmer	Occupancy Sensor	Included	Included	No	☐	☐
Restrooms	Restrooms	Manual ON/OFF	Dimmer	Occupancy Sensor	Included	Included	No	☐	☐
Locker Rooms	Locker Dressing Room	Manual ON/OFF	Dimmer	Occupancy Sensor	Included	Included	No	☐	☐
Office < 250	Office 250 square feet or less	Manual ON/OFF	Dimmer	Occupancy Sensor	Included	Included	No	☐	☐
Lobby	Main Entry Lobby	Manual ON/OFF	Dimmer	Occupancy Sensor	Included	Included	No	☐	☐
Classroom	Classroom, Lecture, or Training Vocational Area	Manual ON/OFF	Dimmer	Occupancy Sensor	Included	Included	No	☐	☐

Registration Number: | Registration Date/Time: | Registration Provider: Energysoft

CA Building Energy Efficiency Standards - 2019 Nonresidential Compliance | Report Version: 2019.1.003 Schema Version: rev 20200601 | Report Generated: 2022-08-17 15:55:38

STATE OF CALIFORNIA
Indoor Lighting
NRCC-LTI-E
CALIFORNIA ENERGY COMMISSION

CERTIFICATE OF COMPLIANCE		NRCC-LTI-E
Project Name:	Highland HS 50M Pool and Aquatics Center	**Report Page:** (Page 4 of 7)
Project Address:	39055 25th St W	**Date Prepared:** 8/17/2022

H. INDOOR LIGHTING CONTROLS (Not including PAFs)

Electrical Room	Electrical Mechancial Telephone Room	Manual ON/OFF	Dimmer	Occupancy Sensor	Included	Included	No	☐	☐
Concession	Kitchen/ Food Preparation Area	Manual ON/OFF	Dimmer	Occupancy Sensor	Included	Included	No	☐	☐

*NOTES: Controls with a * require a note in the space below explaining how compliance is achieved.
EX: Conference 1: Primary/Skylight Daylighting: Exempt because less than 120 watts of general lighting; EXCEPTION 1 to §130.1(d)2*

13

Plan Sheet Showing Daylit Zones:

I. LIGHTING POWER ALLOWANCE: COMPLETE BUILDING OR AREA CATEGORY METHODS

Each area complying using the Complete Building or Area Category Methods per §140.6(b) are included in this table. Column 06 indicates if additional lighting power allowances per §140.6(c) or adjustments per §140.6(a) are being used .

Conditioned Spaces

01	02	03	04	05	06	
Area Description	Complete Building or Area Category Primary Function Area	Allowed Density (W/ft²)	Area (ft²)	Allowed Wattage (Watts)	Additional Allowance / Adjustment	
					Area Category	PAF
Storage	All Other Space Types	0.4	195	78	No	No
Restrooms	Restrooms	0.65	978	635.7	No	No
Locker Rooms	Locker Dressing Room	0.45	564	253.8	No	No
Office < 250	Office 250 square feet or less	0.7	149	104.3	No	No
Lobby	Main Entry Lobby	0.85	163	138.5	No	No
Classroom	Classroom, Lecture, or Training Vocational Area	0.7	867	606.9	No	No
Electrical/ Data Room	Electrical Mechancial Telephone Room	0.4	127	50.8	No	No
Concession	Kitchen/ Food Preparation Area	0.95	152	144.4	No	No
	TOTALS:		3,195	2,012.4	See Tables J, or P for detail	

J. ADDITIONAL ALLOWANCE: AREA CATEGORY METHOD QUALIFYING LIGHTING SYSTEM

This section does not apply to this project.

Registration Number: | Registration Date/Time: | Registration Provider: Energysoft

CA Building Energy Efficiency Standards - 2019 Nonresidential Compliance | Report Version: 2019.1.003 Schema Version: rev 20200601 | Report Generated: 2022-08-17 15:55:38

STATE OF CALIFORNIA
Indoor Lighting
NRCC-LTI-E
CALIFORNIA ENERGY COMMISSION

CERTIFICATE OF COMPLIANCE		NRCC-LTI-E
Project Name:	Highland HS 50M Pool and Aquatics Center	**Report Page:** (Page 5 of 7)
Project Address:	39055 25th St W	**Date Prepared:** 8/17/2022

K. TAILORED METHOD GENERAL LIGHTING POWER ALLOWANCE

This section does not apply to this project.

L. ADDITIONAL LIGHTING ALLOWANCE: TAILORED WALL DISPLAY

This section does not apply to this project.

M. ADDITIONAL LIGHTING ALLOWANCE: TAILORED FLOOR AND TASK LIGHTING

This section does not apply to this project.

N. ADDITIONAL LIGHTING ALLOWANCE: TAILORED ORNAMENTAL/SPECIAL EFFECTS

This section does not apply to this project.

O. ADDITIONAL LIGHTING ALLOWANCE: TAILORED VERY VALUABLE MERCHANDISE

This section does not apply to this project.

P. POWER ADJUSTMENT: LIGHTING CONTROL CREDIT (POWER ADJUSTMENT FACTOR (PAF))

This section does not apply to this project.

Q. RATED POWER REDUCTION COMPLIANCE FOR ALTERATIONS

This section does not apply to this project.

R. 80% LIGHTING POWER FOR ALL ALTERATIONS - CONTROLS EXCEPTIONS

This section does not apply to this project.

S. DAYLIGHT DESIGN POWER ADJUSTMENT FACTOR (PAF)

This section does not apply to this project.

Registration Number: | Registration Date/Time: | Registration Provider: Energysoft

CA Building Energy Efficiency Standards - 2019 Nonresidential Compliance | Report Version: 2019.1.003 Schema Version: rev 20200601 | Report Generated: 2022-08-17 15:55:38

STATE OF CALIFORNIA
Indoor Lighting
NRCC-LTI-E
CALIFORNIA ENERGY COMMISSION

CERTIFICATE OF COMPLIANCE		NRCC-LTI-E
Project Name:	Highland HS 50M Pool and Aquatics Center	**Report Page:** (Page 6 of 7)
Project Address:	39055 25th St W	**Date Prepared:** 8/17/2022

T. DECLARATION OF REQUIRED CERTIFICATES OF INSTALLATION

Selections have been made based on information provided in this document. If any selection have been changed by permit applicant, an explanation should be included in Table E. Additional Remarks. These documents must be provided to the building inspector during construction and can be found online at https://www.energy.ca.gov/title24/2019standards/2019_compliance_documents/Nonresidential_Documents/NRCI/

Form/Title	Field Inspector	
	Pass	Fail
NRCI-LTI-01-E - Must be submitted for all buildings	☐	☐

U. DECLARATION OF REQUIRED CERTIFICATES OF ACCEPTANCE

Selections have been made based on information provided in this document. If any selection have been changed by the permit applicant, an explanation should be included in Table E. Additional Remarks. These documents must be provided to the building inspector during construction and any with "-A" in the form name must be completed through an Acceptance Test Technician Certification Provider (ATTCP). For more information visit: http://www.energy.ca.gov/title24/attcp/providers.html

Form/Title	Systems/Spaces To Be Field Verified	Field Inspector	
		Pass	Fail
NRCA-LTI-02-A - Must be submitted for occupancy sensors and automatic time switch controls.	☐	☐	
NRCA-LTI-03-A - Must be submitted for automatic daylight controls.	☐	☐	
NRCA-LTI-04-A - Must be submitted for demand responsive lighting controls.	☐	☐	

Registration Number: | Registration Date/Time: | Registration Provider: Energysoft

CA Building Energy Efficiency Standards - 2019 Nonresidential Compliance | Report Version: 2019.1.003 Schema Version: rev 20200601 | Report Generated: 2022-08-17 15:55:38

STATE OF CALIFORNIA
Indoor Lighting
NRCC-LTI-E
CALIFORNIA ENERGY COMMISSION

CERTIFICATE OF COMPLIANCE		NRCC-LTI-E
Project Name:	Highland HS 50M Pool and Aquatics Center	**Report Page:** (Page 7 of 7)
Project Address:	39055 25th St W	**Date Prepared:** 8/17/2022

DOCUMENTATION AUTHOR'S DECLARATION STATEMENT

I certify that this Certificate of Compliance documentation is accurate and complete.

Documentation Author Name:	Documentation Author Signature:
Company: tk1sc	Signature Date: 2022-08-17
Address:	CEA/ HERS Certification Identification (if applicable):
City/State/Zip:	Phone:

RESPONSIBLE PERSON'S DECLARATION STATEMENT

I certify the following under penalty of perjury, under the laws of the State of California:

1. The information provided on this Certificate of Compliance is true and correct.
2. I am eligible under Division 3 of the Business and Professions Code to accept responsibility for the building design or system design identified on this Certificate of Compliance (responsible designer)
3. The energy features and performance specifications, materials, components, and manufactured devices for the building design or system design identified on this Certificate of Compliance conform to the requirements of Title 24, Part 1 and Part 6 of the California Code of Regulations.
4. The building design features or system design features identified on this Certificate of Compliance are consistent with the information provided on other applicable compliance documents, worksheets, calculations, plans and specifications submitted to the enforcement agency for approval with this building permit application.
5. I will ensure that a completed signed copy of this Certificate of Compliance shall be made available with the building permit(s) issued for the building, and made available to the enforcement agency for all applicable inspections. I understand that a completed signed copy of this Certificate of Compliance is required to be included with the documentation the builder provides to the building owner at occupancy.

Responsible Designer Name: Ray W. Swartz	Responsible Designer Signature:
Company: tk1sc	Date Signed: 2022-08-17
Address: 15231 Laguna Canyon Road	License: E15610
City/State/Zip: Irvine CA 92618	Phone:

Registration Number: | Registration Date/Time: | Registration Provider: Energysoft

CA Building Energy Efficiency Standards - 2019 Nonresidential Compliance | Report Version: 2019.1.003 Schema Version: rev 20200601 | Report Generated: 2022-08-17 15:55:38

TITLE 24 PROCEDURES FOR TESTING AND ADJUSTING

CONTRACTOR SHALL BE RESPONSIBLE FOR ALL WORK ASSOCIATED WITH FINAL INSPECTION AND APPLICABLE ACCEPTANCE REQUIREMENT PROCEDURES. INCLUDE ALL COSTS IN THE BASE BID. THIS SHALL INCLUDE, BUT NOT BE LIMITED TO, CONSTRUCTION INSPECTION, MEASUREMENTS, MONITORING, FUNCTIONAL TESTING, CALIBRATING, ETC. CONTRACTOR SHALL ASSUME THE ROLE OF "FIELD TECHNICIAN" AND "RESPONSIBLE PERSON" AS DEFINED IN STATE OF CALIFORNIA 2019 BUILDING ENERGY EFFICIENCY STANDARDS NONRESIDENTIAL COMPLIANCE MANUAL SECTIONS 13.1.2.2 AND 13.1.2.3.

LIGHTING CONTROL ACCEPTANCE TESTING AND ADJUSTING PROCEDURES – REFER TO **NRCA–LTI–02–A** DOCUMENTS.

AUTOMATIC DAYLIGHT CONTROL ACCEPTANCE TESTING AND ADJUSTING PROCEDURES – REFER TO **NRCA–LTI–03–A** DOCUMENTS.

DEMAND RESPONSE LIGHTING CONTROL ACCEPTANCE TESTING AND ADJUSTING PROCEDURES – REFER TO **NRCA–LTI–04–A** DOCUMENTS.

INSTITUTIONAL TUNING PAF ACCEPTANCE TESTING AND ADJUSTING PROCEDURES – REFER TO **NRCA–LTI–05–A** DOCUMENTS.

OUTDOOR LIGHTING CONTROL ACCEPTANCE TESTING AND ADJUSTING PROCEDURES – REFER TO **NRCA–LTO–02–A** DOCUMENTS.

ALL LIGHTING CONTROLS TESTING AND ADJUSTING DOCUMENTS NOTED ABOVE ARE AVAILABLE FROM THE CALIFORNIA ENERGY COMMISSION WEB SITE AT: https://ww2.energy.ca.gov/title24/2019standards/2019_compliance_documents/Nonresidential_Documents/NRCA/

TITLE 24 GENERAL NOTE

CONTRACTOR SHALL BE RESPONSIBLE FOR ALL WORK ASSOCIATED WITH FINAL INSPECTION AND APPLICABLE ACCEPTANCE REQUIREMENT PROCEDURES. INCLUDE ALL COSTS IN THE BASE BID. THIS SHALL INCLUDE, BUT NOT BE LIMITED TO, CONSTRUCTION INSPECTION, MEASUREMENTS, MONITORING, FUNCTIONAL TESTING, CALIBRATING, ETC. CONTRACTOR SHALL ASSUME THE ROLE OF "FIELD TECHNICIAN" AND "RESPONSIBLE PERSON" AS DEFINED IN STATE OF CALIFORNIA 2019 BUILDING ENERGY EFFICIENCY STANDARDS NONRESIDENTIAL COMPLIANCE MANUAL SECTIONS 13.1.2.2 AND 13.1.2.3.

SEE STATE OF CALIFORNIA 2019 BUILDING ENERGY EFFICIENCY STANDARDS SECTIONS 10–103(a)3A AND 10–103(a)3B AND SECTION 130.4 FOR MORE INFORMATION.

SEE STATE OF CALIFORNIA 2019 BUILDING ENERGY EFFICIENCY STANDARDS NONRESIDENTIAL COMPLIANCE MANUAL CHAPTER 13 FOR MORE DETAILED REQUIREMENTS / INFORMATION.

SEE STATE OF CALIFORNIA 2019 BUILDING ENERGY EFFICIENCY STANDARDS RESIDENTIAL COMPLIANCE MANUAL CHAPTER 2 FOR MORE DETAILED REQUIREMENTS / INFORMATION.

PROVIDE COMPLETED INSTALLATION CERTIFICATE(S) AND CERTIFICATE(S) OF ACCEPTANCE AS REQUIRED TO THE SATISFACTION OF THE ENFORCEMENT AGENCY.

IDENTIFICATION STAMP
DIV. OF THE STATE ARCHITECT
APP: 03-122664 INC:
REVIEWED FOR
SS ☑ FLS ☑ ACS ☑
DATE: 05/12/2023

pjhm architects
Web: pjhm.com
OC Office: 24461 Ridge Route Drive #100, Laguna Hills, CA • 92653 Phone: 760.730.5557
LA Office: 837 Traction Avenue, #410, Los Angeles, CA • 90013 Phone: 213.278.0112

LICENSED ARCHITECT
RICHARD W. RIDDELL
No. C15585
REN. 02/25
STATE OF CALIFORNIA

tk|sc COLLABORATIVE
11870 Pierce Street, Suite 160
Riverside, California 92505
951.299.4160 www.tk1sc.com
Project Leader - Nikolas Bruno
Electrical Lead - Nikolas Bruno
tk1sc Job #: B2202744.000

REGISTERED PROFESSIONAL ENGINEER
RAYMOND W. SWARTZ
No. E15610
Exp. 12-31-2024
ELECTRICAL
STATE OF CALIFORNIA

HIGHLAND HIGH SCHOOL
50M POOL & AQUATICS CENTER
KERN HIGH SCHOOL DISTRICT
SD Office: 804 Pier View Way #103, Oceanside, CA • 92054 Phone: 949.496.6193

TITLE 24 – INTERIOR
E–7.4

8/2/2022 11:34:37 AM

STATE OF CALIFORNIA
Indoor Lighting
NRCC-LTI-E — CALIFORNIA ENERGY COMMISSION

CERTIFICATE OF COMPLIANCE			NRCC-LTI-E
Project Name:	Highland HS 50M Pool and Aquatics Center	Report Page:	(Page 5 of 7)
Project Address:	39055 25th St W	Date Prepared:	9/12/2022

O. ADDITIONAL LIGHTING ALLOWANCE: TAILORED VERY VALUABLE MERCHANDISE

This section does not apply to this project.

P. POWER ADJUSTMENT: LIGHTING CONTROL CREDIT (POWER ADJUSTMENT FACTOR (PAF))

This section does not apply to this project.

Q. RATED POWER REDUCTION COMPLIANCE FOR ALTERATIONS

This section does not apply to this project.

R. 80% LIGHTING POWER FOR ALL ALTERATIONS - CONTROLS EXCEPTIONS

This section does not apply to this project.

S. DAYLIGHT DESIGN POWER ADJUSTMENT FACTOR (PAF)

This section does not apply to this project.

T. DECLARATION OF REQUIRED CERTIFICATES OF INSTALLATION

Selections have been made based on information provided in this document. If any selection have been changed by permit applicant, an explanation should be included in Table E. Additional Remarks. These documents must be provided to the building inspector during construction and can be found online at https://www.energy.ca.gov/title24/2019standards/2019_compliance_documents/Nonresidential_Documents/NRCI/

Form/Title	Field Inspector	
	Pass	Fail
NRCI-LTI-01-E - Must be submitted for all buildings	☐	☐

STATE OF CALIFORNIA
Indoor Lighting
NRCC-LTI-E — CALIFORNIA ENERGY COMMISSION

CERTIFICATE OF COMPLIANCE			NRCC-LTI-E
Project Name:	Highland HS 50M Pool and Aquatics Center	Report Page:	(Page 3 of 7)
Project Address:	39055 25th St W	Date Prepared:	9/12/2022

H. INDOOR LIGHTING CONTROLS (Not including PAFs)

*This table includes lighting controls for conditioned and unconditioned spaces. When a control having a * is shown, the notes section of this table provides more detail on how compliance is achieved. The lighting controls section of the Compliance Summary Table on the first page will show "DOES NOT COMPLY" if the notes are left blank.*

Building Level Controls

01	02	03	
Mandatory Demand Response §110.12(c)	Shut-off controls §130.1(c)	Field Inspector	
		Pass	Fail
Required > 10,000 SF	Whole Building Auto Time Switch	☐	☐

Area Level Controls

04	05	06	07	08	09	10	11	12	
Area Description	Complete Building or Area Category Primary Function Area	Area Controls §130.1(a)	Multi-Level Controls §130.1(b)	Shut-Off Controls §130.1(c)	Primary/Skylit Daylighting §130.1(d)	Secondary Daylighting §140.6(d)	Interlocked Systems §140.6(a)1	Field Inspector	
								Pass	Fail
Storage	All Other Space Types	Manual ON/OFF	Dimmer	Occupancy Sensor	Included	Included	No	☐	☐
Restrooms	Restrooms	Manual ON/OFF	Dimmer	Occupancy Sensor	Included	Included	No	☐	☐
Locker Rooms	Locker Dressing Room	Manual ON/OFF	Dimmer	Occupancy Sensor	Included	Included	No	☐	☐
Office < 250	Office 250 square feet or less	Manual ON/OFF	Dimmer	Occupancy Sensor	Included	Included	No	☐	☐
Lobby	Main Entry Lobby	Manual ON/OFF	Dimmer	Occupancy Sensor	Included	Included	No	☐	☐
Classroom	Classroom, Lecture, or Training Vocational Area	Manual ON/OFF	Dimmer	Occupancy Sensor	Included	Included	No	☐	☐
Electrical Room	Electrical Mechancial Telephone Room	Manual ON/OFF	Dimmer	Occupancy Sensor	Included	Included	No	☐	☐
Concession	Kitchen/ Food Preparation Area	Manual ON/OFF	Dimmer	Occupancy Sensor	Included	Included	No	☐	☐

STATE OF CALIFORNIA
Indoor Lighting
NRCC-LTI-E — CALIFORNIA ENERGY COMMISSION

CERTIFICATE OF COMPLIANCE			NRCC-LTI-E
Project Name:	Highland HS 50M Pool and Aquatics Center	Report Page:	(Page 1 of 7)
Project Address:	39055 25th St W	Date Prepared:	9/12/2022

This document is used to demonstrate compliance with requirements in §110.9, §110.12(c), §130.0, §130.1, §140.6 and §141.0(b)2 for indoor lighting scopes using the prescriptive path.

A. GENERAL INFORMATION

01	Project Location (city)	Palmdale	04	Total Conditioned Floor Area (ft²)	1,440
02	Climate Zone	14	05	Total Unconditioned Floor Area (ft²)	0
03	Occupancy Types Within Project (select all that apply):		06	# of Stories (Habitable Above Grade)	1

● : See Table I

B. PROJECT SCOPE

This table includes any lighting systems that are within the scope of the permit application and are demonstrating compliance using the prescriptive path outlined in §140.6 or §141.0(b)2 for alterations.

Scope of Work	Conditioned Spaces		Unconditioned Spaces	
01	02	03	04	05
My Project Consists of (check all that apply):	Calculation Method	Area (ft²)	Calculation Method	Area (ft²)
☒ New Lighting System	Area Category Method	1440	Area Category Method	0
☐ New Lighting System - Parking Garage				
Total Area of Work (ft²)	1440		0	

C. COMPLIANCE RESULTS

If any cell on this table says "DOES NOT COMPLY" or "COMPLIES with Exceptional Conditions" refer to Table D. for guidance.

	Allowed Lighting Power per §140.6(b) (Watts)						Adjusted Lighting Power per §140.6(a) (Watts)					Compliance Results
Lighting in conditioned and unconditioned spaces must not be combined for compliance per §140.6(b)1	01 Complete Building §140.6(c)1 (See Table I)	02 Area Category §140.6(c)2 (See Table I)	03 Area Category Additional §140.6(c)2G (+) (See Table J)	04 Tailored §140.6(c)3 (+) (See Table K)	=	05 **Total Allowed** (Watts)	≥	06 Total Designed (Watts) (See Table F)	07 Adjustments PAF Lighting Control Credits §140.6(a)2 (-) (See Table P)	=	08 **Total Adjusted** (Watts) *Includes Adjustments	09 **05 must be >= 08 §140.6**
Conditioned		576	0		=	576	≥	120	0	=	120	COMPLIES
Unconditioned					=		≥			=		

STATE OF CALIFORNIA
Indoor Lighting
NRCC-LTI-E — CALIFORNIA ENERGY COMMISSION

CERTIFICATE OF COMPLIANCE			NRCC-LTI-E
Project Name:	Highland HS 50M Pool and Aquatics Center	Report Page:	(Page 6 of 7)
Project Address:	39055 25th St W	Date Prepared:	9/12/2022

U. DECLARATION OF REQUIRED CERTIFICATES OF ACCEPTANCE

Selections have been made based on information provided in this document. If any selection have been changed by the permit applicant, an explanation should be included in Table E. Additional Remarks. These documents must be provided to the building inspector during construction and any with "-A" in the form name must be completed through an Acceptance Test Technician Certification Provider (ATTCP). For more information visit: http://www.energy.ca.gov/title24/attcp/providers.html

Form/Title	Systems/Spaces To Be Field Verified		Field Inspector	
			Pass	Fail
NRCA-LTI-02-A - Must be submitted for occupancy sensors and automatic time switch controls.	☐	☐		
NRCA-LTI-03-A - Must be submitted for automatic daylight controls.	☐	☐		
NRCA-LTI-04-A - Must be submitted for demand responsive lighting controls.	☐	☐		

STATE OF CALIFORNIA
Indoor Lighting
NRCC-LTI-E — CALIFORNIA ENERGY COMMISSION

CERTIFICATE OF COMPLIANCE			NRCC-LTI-E
Project Name:	Highland HS 50M Pool and Aquatics Center	Report Page:	(Page 4 of 7)
Project Address:	39055 25th St W	Date Prepared:	9/12/2022

H. INDOOR LIGHTING CONTROLS (Not including PAFs)

*NOTES: Controls with a * require a note in the space below explaining how compliance is achieved. *EX: Conference 1: Primary/Skylight Daylighting: Exempt because less than 120 watts of general lighting; EXCEPTION 1 to §130.1(d)2*	13 Plan Sheet Showing Daylit Zones:

I. LIGHTING POWER ALLOWANCE: COMPLETE BUILDING OR AREA CATEGORY METHODS

Each area complying using the Complete Building or Area Category Methods per §140.6(b) are included in this table. Column 06 indicates if additional lighting power allowances per §140.6(c) or adjustments per §140.6(a) are being used .

Conditioned Spaces

01	02	03	04	05	06	
Area Description	Complete Building or Area Category Primary Function Area	Allowed Density (W/ft²)	Area (ft²)	Allowed Wattage (Watts)	Additional Allowance / Adjustment	
					Area Category	PAF
Storage	All Other Space Types	0.4	1,440	576	No	No
			TOTALS:	1,440	576	See Tables J, or P for detail

J. ADDITIONAL ALLOWANCE: AREA CATEGORY METHOD QUALIFYING LIGHTING SYSTEM

This section does not apply to this project.

K. TAILORED METHOD GENERAL LIGHTING POWER ALLOWANCE

This section does not apply to this project.

L. ADDITIONAL LIGHTING ALLOWANCE: TAILORED WALL DISPLAY

This section does not apply to this project.

M. ADDITIONAL LIGHTING ALLOWANCE: TAILORED FLOOR AND TASK LIGHTING

This section does not apply to this project.

N. ADDITIONAL LIGHTING ALLOWANCE: TAILORED ORNAMENTAL/SPECIAL EFFECTS

This section does not apply to this project.

STATE OF CALIFORNIA
Indoor Lighting
NRCC-LTI-E — CALIFORNIA ENERGY COMMISSION

CERTIFICATE OF COMPLIANCE			NRCC-LTI-E
Project Name:	Highland HS 50M Pool and Aquatics Center	Report Page:	(Page 2 of 7)
Project Address:	39055 25th St W	Date Prepared:	9/12/2022

C. COMPLIANCE RESULTS

Controls Compliance (See Table H for Details)	COMPLIES
Rated Power Reduction Compliance (See Table Q for Details)	

D. EXCEPTIONAL CONDITIONS

This table is auto-filled with uneditable comments because of selections made or data entered in tables throughout the form.

E. ADDITIONAL REMARKS

This table includes remarks made by the permit applicant to the Authority Having Jurisdiction.

F. INDOOR LIGHTING FIXTURE SCHEDULE

This table includes all permanent designed lighting and all portable lighting in offices.

Designed Wattage: Conditioned Spaces

01	02	03	04	05	06	07	08	09	10	
Name or Item Tag	Complete Luminaire Description	Modular (Track) Fixture	Small Aperture & Color Change[1]	Watts per luminaire[2]	How is Wattage determined	Total Number of Luminaires	Excluded per §140.6(a)3	Design Watts	Field Inspector	
									Pass	Fail
2	2 - Pendant	No	No	40	Mfr. Spec	2	No	80	☐	☐
6	2 - Pendant	No	No	40	Mfr. Spec	1	No	40	☐	☐
						Total Designed Watts: CONDITIONED SPACES		120		

[1]*FOOTNOTE: Design Watts for small aperture and color changing luminaires which qualify per §140.6(a)4B is adjusted to be 75% of their rated wattage. Table F automatically makes this adjustment, the permit applicant should enter full rated wattage in column 05.*

[2]*Authority Having Jurisdiction may ask for Luminaire cut sheets to confirm wattage used for compliance per §130.0(c) Wattage used must be the maximum rated for the luminaire, not the lamp.*

G. MODULAR LIGHTING SYSTEMS

This section does not apply to this project.

STATE OF CALIFORNIA
Indoor Lighting
NRCC-LTI-E — CALIFORNIA ENERGY COMMISSION

CERTIFICATE OF COMPLIANCE			NRCC-LTI-E
Project Name:	Highland HS 50M Pool and Aquatics Center	Report Page:	(Page 7 of 7)
Project Address:	39055 25th St W	Date Prepared:	9/12/2022

DOCUMENTATION AUTHOR'S DECLARATION STATEMENT

I certify that this Certificate of Compliance documentation is accurate and complete.

Documentation Author Name:	Documentation Author Signature:
Company: tk1sc	Signature Date: 2022-09-12
Address:	CEA/ HERS Certification Identification (if applicable):
City/State/Zip:	Phone:

RESPONSIBLE PERSON'S DECLARATION STATEMENT

I certify the following under penalty of perjury, under the laws of the State of California:

1. The information provided on this Certificate of Compliance is true and correct.
2. I am eligible under Division 3 of the Business and Professions Code to accept responsibility for the building design or system design identified on this Certificate of Compliance (responsible designer)
3. The energy features and performance specifications, materials, components, and manufactured devices for the building design or system design identified on this Certificate of Compliance conform to the requirements of Title 24, Part 1 and Part 6 of the California Code of Regulations.
4. The building design features or system design features identified on this Certificate of Compliance are consistent with the information provided on other applicable compliance documents, worksheets, calculations, plans and specifications submitted to the enforcement agency for approval with this building permit application.
5. I will ensure that a completed signed copy of this Certificate of Compliance shall be made available with the building permit(s) issued for the building, and made available to the enforcement agency for all applicable inspections. I understand that a completed signed copy of this Certificate of Compliance is required to be included with the documentation the builder provides to the building owner at occupancy.

Responsible Designer Name: Ray W. Swartz	Responsible Designer Signature:
Company: tk1sc	Date Signed: 2022-09-12
Address: 15231 Laguna Canyon Road	License: E15610
City/State/Zip: Irvine CA 92618	Phone:

TITLE 24 PROCEDURES FOR TESTING AND ADJUSTING

CONTRACTOR SHALL BE RESPONSIBLE FOR ALL WORK ASSOCIATED WITH FINAL INSPECTION AND APPLICABLE ACCEPTANCE REQUIREMENT PROCEDURES. INCLUDE ALL COSTS IN THE BASE BID. THIS SHALL INCLUDE, BUT NOT BE LIMITED TO, CONSTRUCTION INSPECTION, MEASUREMENTS, MONITORING, FUNCTIONAL TESTING, CALIBRATING, ETC. CONTRACTOR SHALL ASSUME THE ROLE OF "FIELD TECHNICIAN" AND "RESPONSIBLE PERSON" AS DEFINED IN STATE OF CALIFORNIA 2019 BUILDING ENERGY EFFICIENCY STANDARDS NONRESIDENTIAL COMPLIANCE MANUAL SECTIONS 13.1.2.2 AND 13.1.2.3.

LIGHTING CONTROL ACCEPTANCE TESTING AND ADJUSTING PROCEDURES – REFER TO **NRCA–LTI–02–A** DOCUMENTS.

AUTOMATIC DAYLIGHT CONTROL ACCEPTANCE TESTING AND ADJUSTING PROCEDURES – REFER TO **NRCA–LTI–03–A** DOCUMENTS.

DEMAND RESPONSE LIGHTING CONTROL ACCEPTANCE TESTING AND ADJUSTING PROCEDURES – REFER TO **NRCA–LTI–04–A** DOCUMENTS.

INSTITUTIONAL TUNING PAF ACCEPTANCE TESTING AND ADJUSTING PROCEDURES – REFER TO **NRCA–LTI–05–A** DOCUMENTS.

OUTDOOR LIGHTING CONTROL ACCEPTANCE TESTING AND ADJUSTING PROCEDURES – REFER TO **NRCA–LTO–02–A** DOCUMENTS.

ALL LIGHTING CONTROLS TESTING AND ADJUSTING DOCUMENTS NOTED ABOVE ARE AVAILABLE FROM THE CALIFORNIA ENERGY COMMISSION WEB SITE AT:
https://ww2.energy.ca.gov/title24/2019standards/2019_compliance_documents/Nonresidential_Documents/NRCA/

TITLE 24 GENERAL NOTE

CONTRACTOR SHALL BE RESPONSIBLE FOR ALL WORK ASSOCIATED WITH FINAL INSPECTION AND APPLICABLE ACCEPTANCE REQUIREMENT PROCEDURES. INCLUDE ALL COSTS IN THE BASE BID. THIS SHALL INCLUDE, BUT NOT BE LIMITED TO, CONSTRUCTION INSPECTION, MEASUREMENTS, MONITORING, FUNCTIONAL TESTING, CALIBRATING, ETC. CONTRACTOR SHALL ASSUME THE ROLE OF "FIELD TECHNICIAN" AND "RESPONSIBLE PERSON" AS DEFINED IN STATE OF CALIFORNIA 2019 BUILDING ENERGY EFFICIENCY STANDARDS NONRESIDENTIAL COMPLIANCE MANUAL SECTIONS 13.1.2.2 AND 13.1.2.3.

SEE STATE OF CALIFORNIA 2019 BUILDING ENERGY EFFICIENCY STANDARDS SECTIONS 10–103(a)3A AND 10–103(a)3B AND SECTION 130.4 FOR MORE INFORMATION.

SEE STATE OF CALIFORNIA 2019 BUILDING ENERGY EFFICIENCY STANDARDS NONRESIDENTIAL COMPLIANCE MANUAL CHAPTER 13 FOR MORE DETAILED REQUIREMENTS / INFORMATION.

SEE STATE OF CALIFORNIA 2019 BUILDING ENERGY EFFICIENCY STANDARDS RESIDENTIAL COMPLIANCE MANUAL CHAPTER 2 FOR MORE DETAILED REQUIREMENTS / INFORMATION.

PROVIDE COMPLETED INSTALLATION CERTIFICATE(S) AND CERTIFICATE(S) OF ACCEPTANCE AS REQUIRED TO THE SATISFACTION OF THE ENFORCEMENT AGENCY.

8/2/2022 11:34:37 AM

IDENTIFICATION STAMP
DIV. OF THE STATE ARCHITECT
APP: 03-122664 INC:
REVIEWED FOR
SS ☑ FLS ☑ ACS ☑
DATE: 05/12/2023

pjhm architects
Web: pjhm.com
Phone: 213.278.0112
Oceanside, CA 92054 Phone: 760.730.5557 OC Office: 24461 Ridge Route Drive #100, Laguna Hills, CA 92653 Phone: 949.496.6155 LA Office: 837 Traction Avenue, #410, Los Angeles, CA 90013

LICENSED ARCHITECT
RICHARD W. SWARTZ
No. C15585
REN. 02/25
STATE OF CALIFORNIA

tk1sc COLLABORATIVE
11870 Pierce Street, Suite 160
Riverside, California 92505
951.299.4160 www.tk1sc.com
Project Leader - Nikolas Bruno
Electrical Lead - Nikolas Bruno
tk1sc Job #: B2202744.000

REGISTERED PROFESSIONAL ENGINEER
RAYMOND W. SWARTZ
No. E15610
EXP. 12-31-2024
ELECTRICAL
STATE OF CALIFORNIA

HIGHLAND HIGH SCHOOL
50M POOL & AQUATICS CENTER
KERN HIGH SCHOOL DISTRICT
SD Office: 804 Pier View Way #103, Oceanside, CA 92054 Phone: 949.496.6155

TITLE 24 – INTERIOR
E–7.5

STATE OF CALIFORNIA
Outdoor Lighting
NRCC-LTO-E — CALIFORNIA ENERGY COMMISSION

CERTIFICATE OF COMPLIANCE		NRCC-LTO-E
Project Name:	Highland HS 50M Pool and Aquatics Center	Report Page: (Page 1 of 6)
Project Address:	39055 25th St W	Date Prepared: 8/17/2022

A. GENERAL INFORMATION

01	Project Location (city)	Palmdale	04	Total Illuminated Hardscape Area (ft²)	1687
02	Climate Zone	14			
03	Outdoor Lighting Zone per Title 24 Part 1 §10.114 or as designated by Authority Having Jurisdiction (AHJ):				

☐ LZ-0: Very Low - Undeveloped Parkland ☐ LZ-2: Moderate - Rural Areas ☐ LZ-4: High - Must be reviewed by CA Energy Commission for Approval
☐ LZ-1: Low - Developed Parkland ☒ LZ-3: Moderately High - Urban Areas

B. PROJECT SCOPE

This table includes outdoor lighting systems that are within the scope of the permit application and are demonstrating compliance using the prescriptive path outlined in §140.7 or §141.0(b)2L for alterations.

My Project Consists of:

01	02
☒ New Lighting System	Must Comply with Allowances from §140.7
☐ Altered Lighting System	Is your alteration increasing the connected lighting load (Watts)? ◯ Yes ◯ No

03	04	05
% of Existing Luminaires Being Altered[1]	Sum Total of Luminaires Being Added or Altered	Calculation Method
☐ < 10% ☐ >= 10% and < 50% ☐ >= 50%		

Please proceed to Table F. Outdoor Lighting Fixture Schedule to define the project's luminaires.

[1] *FOOTNOTES: % of Existing Luminaires Being Altered = (Sum Total of Luminaires Being Added or Altered / Existing Luminaires within the Scope of the Permit Application) x 100.*

Registration Number: | Registration Date/Time: | Registration Provider: Energysoft

CA Building Energy Efficiency Standards - 2019 Nonresidential Compliance | Report Version: 2019.1.003 Schema Version: rev 20200601 | Report Generated: 2022-08-17 16:34:07

STATE OF CALIFORNIA
Outdoor Lighting
NRCC-LTO-E — CALIFORNIA ENERGY COMMISSION

CERTIFICATE OF COMPLIANCE		NRCC-LTO-E
Project Name:	Highland HS 50M Pool and Aquatics Center	Report Page: (Page 2 of 6)
Project Address:	39055 25th St W	Date Prepared: 8/17/2022

C. COMPLIANCE RESULTS

Results in this table are automatically calculated from data input and calculations in Tables F through I. Note: If any cell on this table says "COMPLIES with Exceptional Conditions" refer to Table D. Exceptional Conditions for guidance or see applicable Table referenced below.

Calculations of Total Allowed Lighting Power (Watts) §140.7 or §141.0(b)2L												Compliance Results		
01		02		03		04		05		06		07	08	09
General Hardscape Allowance §140.7(d)1 (See Table I)	+	Per Application §140.7(d)2 (See Table J)	+	Sales Frontage §140.7(d)2 (See Table K)	+	Ornamental §140.7(d)2 (See Table L)	+	Per Specific Area §140.7(d)2 (See Table M)	OR	Existing Power Allowance §141.0(b)2L (See Table N)	=	Total Allowed (Watts)	≥	Total Actual (Watts)	07 must be >= 08
456.18	+	---	+	---	+	---	+	---	OR	---	=	456.18	≥	160	COMPLIES
Cutoff Compliance (See Table G for Details)															N/A
Controls Compliance (See Table H for Details)															COMPLIES

D. EXCEPTIONAL CONDITIONS

This table is auto-filled with uneditable comments because of selections made or data entered in tables throughout the form.

E. ADDITIONAL REMARKS

This table includes remarks made by the permit applicant to the Authority Having Jurisdiction.

Registration Number: | Registration Date/Time: | Registration Provider: Energysoft

CA Building Energy Efficiency Standards - 2019 Nonresidential Compliance | Report Version: 2019.1.003 Schema Version: rev 20200601 | Report Generated: 2022-08-17 16:34:07

STATE OF CALIFORNIA
Outdoor Lighting
NRCC-LTO-E — CALIFORNIA ENERGY COMMISSION

CERTIFICATE OF COMPLIANCE		NRCC-LTO-E
Project Name:	Highland HS 50M Pool and Aquatics Center	Report Page: (Page 3 of 6)
Project Address:	39055 25th St W	Date Prepared: 8/17/2022

F. OUTDOOR LIGHTING FIXTURE SCHEDULE

For new or altered lighting systems demonstrating compliance with §140.7 all new luminaires being installed and any existing luminaires remaining or being moved within the spaces covered by the permit application are included in the Table below. For altered lighting systems using the Existing Power method per §141.0(b)2L only new luminaires being installed and replacement luminaires being installed as part of the project scope are included (ie, existing luminaires remaining or existing luminaires being moved are not included).

Designed Wattage:

01	02		03	04	05	06	07	08	09	10	
Name or Item Tag	Complete Luminaire Description		Watts per luminaire[1,2]	How is Wattage determined	Total number luminaires.[2]	Luminaire Status[3]	Excluded per §140.7(a)	Design Watts	Cutoff Req. > 6,200 initial lumen output §130.2(b)[4]	Field Inspector	
										Pass	Fail
5	5 - 4' LONG LINEAR, SURFACE MOUNTED FIXT	☐ Linear	40	Mfr. Spec	4	New	☐	160	NA: < 6200 lumens	☐	☐
							Total Design Watts:	160			

[*] *NOTES: Selections with a * require a note in the space below explaining how compliance is achieved.*
EX: Luminaire is lighting a statue; EXCEPTION 2 to §130.2(b)

[1] *FOOTNOTES: Authority Having Jurisdiction may ask for Luminaire cut sheets to confirm wattage used for compliance per §130.0(c)*
[2] *For linear luminaires, wattage should be indicated as W/lf instead of Watts/luminaire. Total linear feet should be indicated in column 05 instead of number of luminaires.*
[3] *Select "New" for new luminaires in a new outdoor lighting project, or for added luminaires in an alteration. Select "Altered" for replacement luminaires in an alteration. Select "Existing to Remain" for existing luminaires within the project scope that are not being altered and are remaining. Select "Existing Reinstalled" for existing luminaires which are being removed and reinstalled as part of the project scope.*
[4] *Compliance with mandatory cutoff requirements is required for luminaires with initial lumen output >= 6,200 unless exempted by §130.2(b)*

G. CUTOFF REQUIREMENTS (BUG)

This section does not apply to this project.

Registration Number: | Registration Date/Time: | Registration Provider: Energysoft

CA Building Energy Efficiency Standards - 2019 Nonresidential Compliance | Report Version: 2019.1.003 Schema Version: rev 20200601 | Report Generated: 2022-08-17 16:34:07

STATE OF CALIFORNIA
Outdoor Lighting
NRCC-LTO-E — CALIFORNIA ENERGY COMMISSION

CERTIFICATE OF COMPLIANCE		NRCC-LTO-E
Project Name:	Highland HS 50M Pool and Aquatics Center	Report Page: (Page 6 of 6)
Project Address:	39055 25th St W	Date Prepared: 8/17/2022

DOCUMENTATION AUTHOR'S DECLARATION STATEMENT

I certify that this Certificate of Compliance documentation is accurate and complete.

Documentation Author Name:	Documentation Author Signature:
Company: tk1sc	Signature Date:
Address:	CEA/ HERS Certification Identification (if applicable):
City/State/Zip:	Phone:

RESPONSIBLE PERSON'S DECLARATION STATEMENT

I certify the following under penalty of perjury, under the laws of the State of California:

1. The information provided on this Certificate of Compliance is true and correct.
2. I am eligible under Division 3 of the Business and Professions Code to accept responsibility for the building design or system design identified on this Certificate of Compliance (responsible designer)
3. The energy features and performance specifications, materials, components, and manufactured devices for the building design or system design identified on this Certificate of Compliance conform to the requirements of Title 24, Part 1 and Part 6 of the California Code of Regulations.
4. The building design features or system design features identified on this Certificate of Compliance are consistent with the information provided on other applicable compliance documents, worksheets, calculations, plans and specifications submitted to the enforcement agency for approval with this building permit application.
5. I will ensure that a completed signed copy of this Certificate of Compliance shall be made available with the building permit(s) issued for the building, and made available to the enforcement agency for all applicable inspections. I understand that a completed signed copy of this Certificate of Compliance is required to be included with the documentation the builder provides to the building owner at occupancy.

Responsible Designer Name: Ray W. Swartz	Responsible Designer Signature:
Company: tk1sc	Date Signed: 2022-08-17
Address: 15231 Laguna Canyon Road	License: E15610
City/State/Zip: Irvine CA 92618	Phone:

Registration Number: | Registration Date/Time: | Registration Provider: Energysoft

CA Building Energy Efficiency Standards - 2019 Nonresidential Compliance | Report Version: 2019.1.003 Schema Version: rev 20200601 | Report Generated: 2022-08-17 16:34:07

STATE OF CALIFORNIA
Outdoor Lighting
NRCC-LTO-E — CALIFORNIA ENERGY COMMISSION

CERTIFICATE OF COMPLIANCE		NRCC-LTO-E
Project Name:	Highland HS 50M Pool and Aquatics Center	Report Page: (Page 5 of 6)
Project Address:	39055 25th St W	Date Prepared: 8/17/2022

J. LIGHTING ALLOWANCE: PER APPLICATION

This section does not apply to this project.

K. LIGHTING ALLOWANCE: SALES FRONTAGE

This section does not apply to this project.

L. LIGHTING ALLOWANCE: ORNAMENTAL

This section does not apply to this project.

M. LIGHTING ALLOWANCE: PER SPECIFIC AREA

This section does not apply to this project.

N. EXISTING CONDITIONS POWER ALLOWANCE (alterations only)

This section does not apply to this project.

O. DECLARATION OF REQUIRED CERTIFICATES OF INSTALLATION

Selections have been made based on information provided in this document. If any selection have been changed by permit applicant, an explanation should be included in Table E. Additional Remarks. These documents must be provided to the building inspector during construction and can be found online at https://www.energy.ca.gov/title24/2019standards/2019_compliance_documents/Nonresidential_Documents/NRCI/

Form/Title	Field Inspector Pass	Field Inspector Fail
NRCI-LTO-01-E - Must be submitted for all buildings	☐	☐

P. DECLARATION OF REQUIRED CERTIFICATES OF ACCEPTANCE

There are no NRCA forms required for this project.

Registration Number: | Registration Date/Time: | Registration Provider: Energysoft

CA Building Energy Efficiency Standards - 2019 Nonresidential Compliance | Report Version: 2019.1.003 Schema Version: rev 20200601 | Report Generated: 2022-08-17 16:34:07

STATE OF CALIFORNIA
Outdoor Lighting
NRCC-LTO-E — CALIFORNIA ENERGY COMMISSION

CERTIFICATE OF COMPLIANCE		NRCC-LTO-E
Project Name:	Highland HS 50M Pool and Aquatics Center	Report Page: (Page 4 of 6)
Project Address:	39055 25th St W	Date Prepared: 8/17/2022

H. OUTDOOR LIGHTING CONTROLS

This table demonstrates compliance with controls requirements for all new or altered luminaires installed as part of the permit application. For alteration projects, luminaires which are existing to remain (ie untouched) and luminaires which are removed and reinstalled (wiring only) do not need to be included in this table even if they are within the spaces covered by the permit application.
*When an option having a * is selected, the notes section of this table must be completed. The lighting controls section of the Compliance Summary Table on the first page will show "DOES NOT COMPLY" if the notes are left blank.*

Mandatory Controls

01	02	03	04	05	
Area Description	Shut-Off §130.2(c)1	Auto-Schedule §130.2(c)2	Motion Sensor §130.2(c)3	Field Inspector	
				Pass	Fail

[*] *NOTES: Controls with a * require a note in the space below explaining how compliance is achieved.*
EX: Not permitted by health & safety to be turned off; EXCEPTION 1 to §130.2(c)

I. LIGHTING POWER ALLOWANCE (per §140.7)

This table includes areas using allowance calculations per §140.7. General Hardscape Allowance is per Table 140.7-A while "Use it or lose it" Allowances are per Table 140.7-B . Indicate which allowances are being used to expand sections for user input. Luminaires that qualify for one of the "Use it or lose it" allowances shall not qualify for another "Use it or lose it" allowance.

	01			
☒ General Hardscape Allowance Table I (below)	"Use it or lose it" Allowance (select all that apply) (select all that apply)			
	☐ Per Application Table J	☐ Sales Frontage Table K	☐ Ornamental Table L	☐ Per Specific Area Table M

Calculated General Hardscape Lighting Power Allowance per Table 140.7-A (LZ 0, 1 & 4)

Calculated General Hardscape Lighting Power Allowance per Table 140.7-A (LZ 2 & 3)

02	03	04	05	06	07	08	9	10
		Area Wattage Allowance (AWA)			Area Wattage Allowance (AWA)			
Area Description	Surface Type	Illuminated Area (ft²)	Allowed Density (W/ft²)	Area Allowance (Watts)	Perimeter Length (lf)	Allowed Density (W/lf)	Linear Allowance (Watts)	Total General AWA + LWA (Watts)
Exterior	Asphalt	1687	0.025	42.2	256	0.2	64	106
							Initial Wattage Allowance for Entire Site (Watts):	350
							Total General Hardscape Allowance (Watts):	456

Registration Number: | Registration Date/Time: | Registration Provider: Energysoft

CA Building Energy Efficiency Standards - 2019 Nonresidential Compliance | Report Version: 2019.1.003 Schema Version: rev 20200601 | Report Generated: 2022-08-17 16:34:07

TITLE 24 PROCEDURES FOR TESTING AND ADJUSTING

CONTRACTOR SHALL BE RESPONSIBLE FOR ALL WORK ASSOCIATED WITH FINAL INSPECTION AND APPLICABLE ACCEPTANCE REQUIREMENT PROCEDURES. INCLUDE ALL COSTS IN THE BASE BID. THIS SHALL INCLUDE, BUT NOT BE LIMITED TO, CONSTRUCTION INSPECTION, MEASUREMENTS, MONITORING, FUNCTIONAL TESTING, CALIBRATING, ETC. CONTRACTOR SHALL ASSUME THE ROLE OF "FIELD TECHNICIAN" AND "RESPONSIBLE PERSON" AS DEFINED IN STATE OF CALIFORNIA 2019 BUILDING ENERGY EFFICIENCY STANDARDS NONRESIDENTIAL COMPLIANCE MANUAL SECTIONS 13.1.2.2 AND 13.1.2.3.

LIGHTING CONTROL ACCEPTANCE TESTING AND ADJUSTING PROCEDURES – REFER TO **NRCA–LTI–02–A** DOCUMENTS.

AUTOMATIC DAYLIGHT CONTROL ACCEPTANCE TESTING AND ADJUSTING PROCEDURES – REFER TO **NRCA–LTI–03–A** DOCUMENTS.

DEMAND RESPONSE LIGHTING CONTROL ACCEPTANCE TESTING AND ADJUSTING PROCEDURES – REFER TO **NRCA–LTI–04–A** DOCUMENTS.

INSTITUTIONAL TUNING PAF ACCEPTANCE TESTING AND ADJUSTING PROCEDURES – REFER TO **NRCA–LTI–05–A** DOCUMENTS.

OUTDOOR LIGHTING CONTROL ACCEPTANCE TESTING AND ADJUSTING PROCEDURES – REFER TO **NRCA–LTO–02–A** DOCUMENTS.

ALL LIGHTING CONTROLS TESTING AND ADJUSTING DOCUMENTS NOTED ABOVE ARE AVAILABLE FROM THE CALIFORNIA ENERGY COMMISSION WEB SITE AT:
https://ww2.energy.ca.gov/title24/2019standards/2019_compliance_documents/Nonresidential_Documents/NRCA/

TITLE 24 GENERAL NOTE

CONTRACTOR SHALL BE RESPONSIBLE FOR ALL WORK ASSOCIATED WITH FINAL INSPECTION AND APPLICABLE ACCEPTANCE REQUIREMENT PROCEDURES. INCLUDE ALL COSTS IN THE BASE BID. THIS SHALL INCLUDE, BUT NOT BE LIMITED TO, CONSTRUCTION INSPECTION, MEASUREMENTS, MONITORING, FUNCTIONAL TESTING, CALIBRATING, ETC. CONTRACTOR SHALL ASSUME THE ROLE OF "FIELD TECHNICIAN" AND "RESPONSIBLE PERSON" AS DEFINED IN STATE OF CALIFORNIA 2019 BUILDING ENERGY EFFICIENCY STANDARDS NONRESIDENTIAL COMPLIANCE MANUAL SECTIONS 13.1.2.2 AND 13.1.2.3.

SEE STATE OF CALIFORNIA 2019 BUILDING ENERGY EFFICIENCY STANDARDS SECTIONS 10–103(a)3A AND 10–103(a)3B AND SECTION 130.4 FOR MORE INFORMATION.

SEE STATE OF CALIFORNIA 2019 BUILDING ENERGY EFFICIENCY STANDARDS NONRESIDENTIAL COMPLIANCE MANUAL CHAPTER 13 FOR MORE DETAILED REQUIREMENTS / INFORMATION.

SEE STATE OF CALIFORNIA 2019 BUILDING ENERGY EFFICIENCY STANDARDS RESIDENTIAL COMPLIANCE MANUAL CHAPTER 2 FOR MORE DETAILED REQUIREMENTS / INFORMATION.

PROVIDE COMPLETED INSTALLATION CERTIFICATE(S) AND CERTIFICATE(S) OF ACCEPTANCE AS REQUIRED TO THE SATISFACTION OF THE ENFORCEMENT AGENCY.

IDENTIFICATION STAMP
DIV. OF THE STATE ARCHITECT
APP: 03-122664 INC:
REVIEWED FOR
SS ☑ FLS ☑ ACS ☑
DATE: 05/12/2023

pjhm architects
LICENSED ARCHITECT RAYMOND W. SWARTZ NO. C15585 REN. 02/25 STATE OF CALIFORNIA
tk1sc COLLABORATIVE
11870 Pierce Street, Suite 160
Riverside, California 92505
951.299.4160 www.tk1sc.com
Project Leader - Nikolas Bruno
Electrical Lead - Nikolas Bruno
tk1sc Job #: B2202744.000
REGISTERED PROFESSIONAL ENGINEER RAYMOND W. SWARTZ No. E15610 EXP. 12-31-2024 ELECTRICAL STATE OF CALIFORNIA
OC Office: 24461 Ridge Route Drive #100, Laguna Hills, CA • 92653 Phone: 949.496.6100 SD Office: 804 Pier View Way #103, Oceanside, CA • 92054 Phone: 760.730.5557 LA Office: 837 Traction Avenue, #410, Los Angeles, CA • 90013 Phone: 213.278.0172 Web: pjhm.com

HIGHLAND HIGH SCHOOL
50M POOL & AQUATICS CENTER
KERN HIGH SCHOOL DISTRICT

TITLE 24 – EXTERIOR

E–7.6

8/2/2022 11:34:37 AM

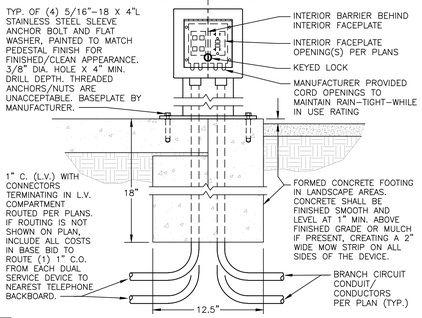

• DUAL SERVICE 'WP-C' SITE RECEPTACLE DETAIL 8

SCALE: N.T.S.

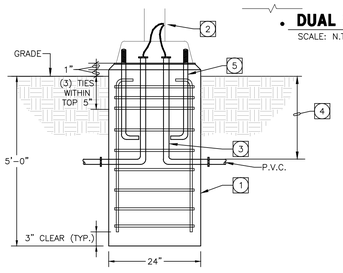

NOTE: MAX HEIGHT OF LIGHT POLE = 14'-0". MAX WEIGHT OF LIGHT FIXTURE = 35 LBS.

1. 2"-0" ø x 5'-0" EMBED. CONC. FTG. WITH (10) #6 VERT. AND #3 TIES @ 6" O.C.
2. BOND EQUIPMENT GROUND TO POLE.
3. BRANCH CIRCUIT CONDUIT PER SITE PLAN.
4. PROVIDE MINIMUM COVER OF 24" FROM FINISH GRADE.
5. POLE ANCHOR BOLTS PER MANUFACTURER SPEC'S.

POLE BASE 'A' DETAIL 10

SCALE: N.T.S. (NOT A PART OF DSA APPROVAL)

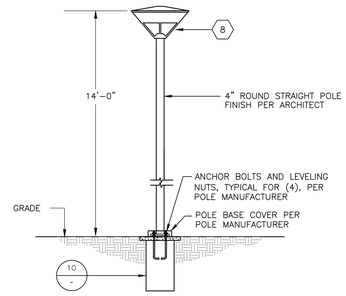

NOTE: POLES WITH TOTAL HEIGHTS LESS THAN 35' HIGH ARE NOT REQUIRED TO BE REVIEWED BY DSA.

POST TOP FIXTURE DETAIL 9

SCALE: N.T.S. (NOT A PART OF DSA APPROVAL)

GENERAL NOTES:

1. INSTALLATION SHALL COMPLY WITH LATEST PUBLISHED EDITION OF THE "INTERPRETATION OR REGULATION MANUAL". IR 25-2 AS ISSUED BY THE DIVISION OF THE STATE ARCHITECT.
2. ATTACHMENT TO CEILING / STRUCTURE SHALL NOT AFFECT ASSEMBLY RATING.
3. FIXTURES @ LESS THAN 56 LBS: INSTALL 2#12 GA. SAFETY WIRES (SLACK). ONE ON EACH END OF FIXTURE DIAGONALLY OPPOSED AND CONNECTED TO STRUCTURE ABOVE.
4. FIXTURES @ 56 LBS OR GREATER: INSTALL 4#12 GA. SUPPORT WIRES (TAUT). ONE ON EACH CORNER OF FIXTURE CONNECTED TO STRUCTURE. WIRES SHALL SUPPORT (4) TIMES THE WEIGHT OF THE FIXTURE.
5. FIXTURES @ LESS THAN 56 LBS AND 4'X4' MIN IN SIZE: INSTALL 4#12 GA. SAFETY WIRES (SLACK) AT EACH CORNER OF THE FIXTURE.

FIXTURE SUPPORT DETAIL 11

SCALE: N.T.S.

EQUIPMENT MOUNTING SCHEDULE

NAME	NEMA/ MNTG.	DIMENSIONS H	W	D	WEIGHT POUNDS	MINIMUM NUMBER OF ANCHORS	SIZE OF ANCHORS *	MINIMUM EMBEDMENT
PANEL-BOARDS	1/W	48	20	6	200	PER DETAIL 3/E-8.0		
INVP	1/W	47	30	25	827	PER DETAIL 1/E-6.3		
MUSCO CNTRL CAB	1/W	48	24	12	140	PER DETAIL 3/E-8.0		
MUSCO AUX CAB	1/W	16	21	12	60	PER DETAIL 3/E-8.0		
SOUND SYS RACK	1/W	36	22	25	150	PER DETAIL 3/E-8.0		

* HILTI KWIK BOLT KB-TZ2 (ICC ESR 4266) USE EQUIVALENT STAINLESS STEEL ANCHOR AT EXTERIOR OR WET LOCATIONS

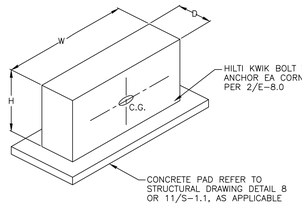

EQUIPMENT MOUNTING DETAIL 5

SCALE: N.T.S.

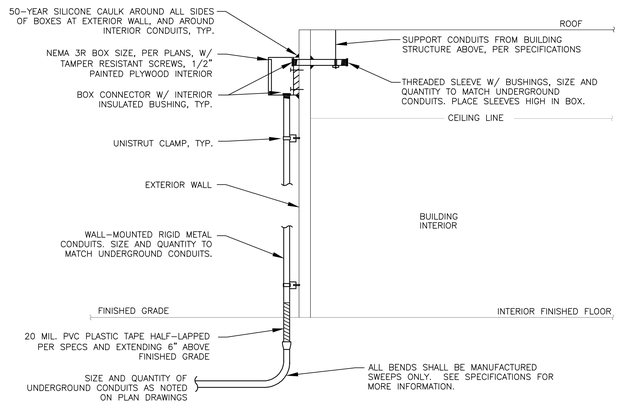

NOTES:

1. ALL BOXES/PLYWOOD TO BE SECURED TO BUILDING STRUCTURE USING MIN. ⅜" X 2" WALL ANCHORS/LAG BOLTS.
2. 50-YEAR SILICONE CAULK AROUND ALL PENETRATIONS, BOXES AND ALL THREADS AS REQUIRED.
3. SEAL ALL UNDERGROUND CONDUITS PER COMMUNICATION PATHWAY NOTES, GENERAL PROJECT NOTES, AND PROJECT SPECIFICATIONS.
4. SEE SPECIFICATIONS FOR MORE INFORMATION.

TYPICAL EXTERIOR JUNCTION BOX DETAIL 6

SCALE: N.T.S.

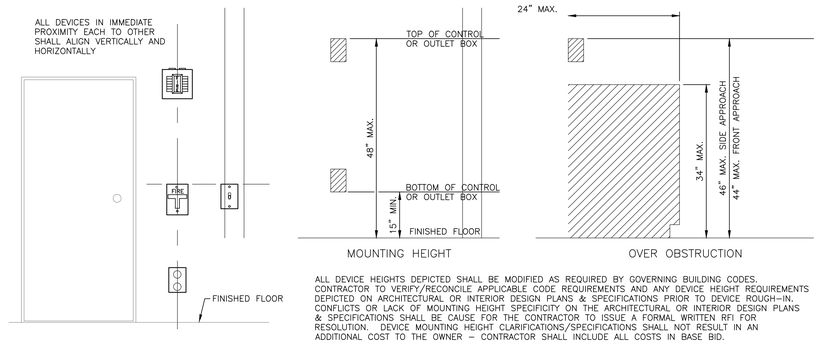

ALL DEVICE HEIGHTS DEPICTED SHALL BE MODIFIED AS REQUIRED BY GOVERNING BUILDING CODES. CONTRACTOR TO VERIFY/RECONCILE APPLICABLE CODE REQUIREMENTS AND ANY DEVICE HEIGHT REQUIREMENTS DEPICTED ON ARCHITECTURAL OR INTERIOR DESIGN PLANS & SPECIFICATIONS PRIOR TO DEVICE ROUGH-IN, CONFLICTS OR LACK OF MOUNTING HEIGHT SPECIFICITY ON THE ARCHITECTURAL OR INTERIOR DESIGN PLANS & SPECIFICATIONS SHALL BE CAUSE FOR THE CONTRACTOR TO ISSUE A FORMAL WRITTEN RFI FOR RESOLUTION. DEVICE MOUNTING HEIGHT CLARIFICATIONS/SPECIFICATIONS SHALL NOT RESULT IN AN ADDITIONAL COST TO THE OWNER – CONTRACTOR SHALL INCLUDE ALL COSTS IN BASE BID.

DEVICE ALIGNMENT & MOUNTING HEIGHT DETAILS 1

SCALE: N.T.S.

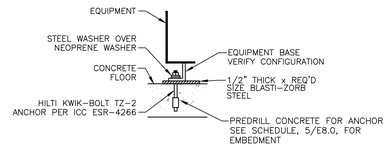

TYPICAL EQUIPMENT FLOOR MOUNTING DETAIL 2

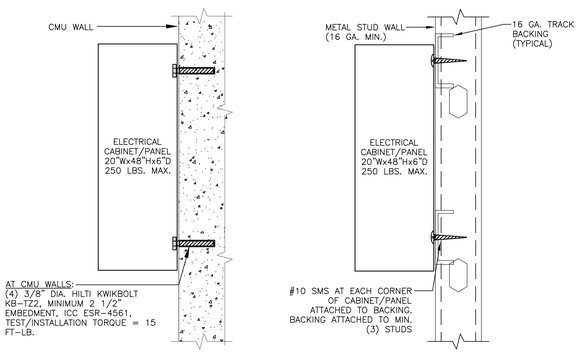

SURFACE PANEL MOUNTING 3

SCALE: N.T.S.

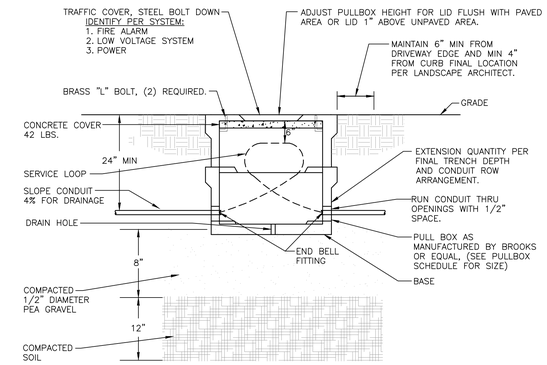

PULL BOX NOTES

1. ALL BOXES SHALL BE SET ON A MINIMUM 8" GRAVEL BASE WITH 1/2" DIAMETER PEA GRAVEL.
2. ALL INCIDENTAL CONCRETE SHALL BE REMOVED FROM BOXES.
3. PROVIDE WATERTIGHT SPLICES AND CAPS FOR POWER CONDUCTORS.
4. PROVIDE SEALING GEL IN ALL CONDUITS (BOTH W/ CONDUCTORS AND IN EMPTY SPARE CONDUITS.) THE GEL SHALL BE INSERTED IN THE CONDUIT TO A DEPTH OF 6" AND FLUSH W/ THE END OF THE CONDUIT. THE GEL SHALL BE MANUFACTURED BY 3M #4442 RE-ENTERABLE ENCAPSULANT.
5. PROVIDE IDENTIFYING TAGS ON ALL POWER AND COMMUNICATION CONDUCTORS IN PULLBOXES.
6. PULLBOX SHALL BE SIZED PER N.E.C. REQUIREMENTS.

PULL BOX DETAIL 4

SCALE: N.T.S.

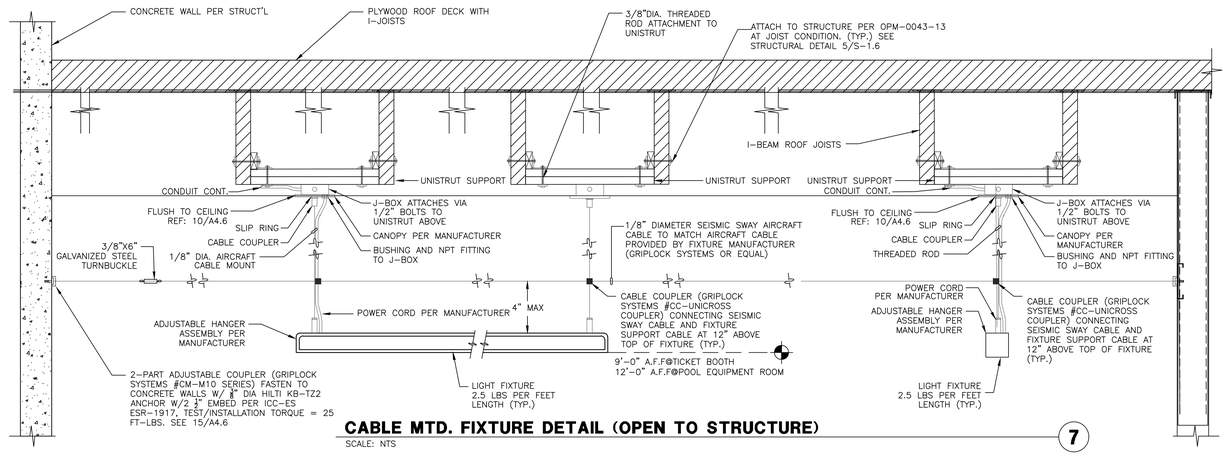

CABLE MTD. FIXTURE DETAIL (OPEN TO STRUCTURE) 7

SCALE: NTS

NOTES:

1. PROVIDE ALL COMPONENTS NECESSARY AND APPROVED FOR A COMPLETE CODE-COMPLIANT AIRCRAFT CABLE SEISMIC BRACING SYSTEM TO LIMIT MOVEMENT OF CABLE HUNG FIXTURES. CABLE BRACING SYSTEM SHALL NOT BE DRAWN TAUT TO AVOID DAMAGING THE BRACING SYSTEM DURING WALL MOVEMENT CAUSED BY EARTHQUAKES. ADJUST TENSION PER BRACING SYSTEM MANUFACTURER RECOMMENDATIONS.
2. SUPPORT TYPICAL FOR FEED AND NON FEED POINT (WITHOUT J-BOX AND FLEX).
3. SHOULD A CONFLICT OCCUR BETWEEN FIXTURE SUPPORT DETAIL AND HVAC DUCT ROUTING, E.C. SHALL INCLUDE ALL COSTS IN BASE BID TO PROVIDE A UNISTRUT "TRAPEZE" WITH 3/8" DIAMETER THREADED ROD HANGERS AROUND THE HVAC DUCT OR OTHER OBSTRUCTION. TRAPEZE SHALL BE SUBMITTED TO PROJECT STRUCTURAL ENGINEER FOR REVIEW PRIOR TO CONSTRUCTION OR OF ORDERING TRAPEZE MATERIAL.
4. PROVIDE UNISTRUT LENGTH AND ORIENTATION AS REQUIRED FOR COMPLETE-APPROVED FIXTURE INSTALLATION.

IDENTIFICATION STAMP
DIV. OF THE STATE ARCHITECT
APP: 03-122664 INC:
REVIEWED FOR
SS ☑ FLS ☑ ACS ☑
DATE: 05/12/2023

pjhm architects

LICENSED ARCHITECT RAYMOND W. SWART NO. C15585 REN. 02/25 STATE OF CALIFORNIA

tk|sc COLLABORATIVE

11870 Pierce Street, Suite 160
Riverside, California 92505
951.299.4160 www.tk1sc.com

Project Leader - Nikolas Bruno
Electrical Lead - Nikolas Bruno
tk1sc Job #: B2202744.000

REGISTERED PROFESSIONAL ENGINEER RAYMOND W. SWART E15610 ELECTRICAL STATE OF CALIFORNIA

pjhm architects
OC Office: 24461 Ridge Route Drive #100, Laguna Hills, CA 92653 Phone: 949.496.6161
LA Office: 837 Traction Avenue, #410, Los Angeles, CA 90013 Phone: 213.278.0172
SD Office: 804 Pier View Way #103, Oceanside, CA 92054 Phone: 760.730.5557
Web: pjhm.com

HIGHLAND HIGH SCHOOL
50M POOL & AQUATICS CENTER
KERN HIGH SCHOOL DISTRICT

DETAILS
E-8.0

8/2/2022 11:34:37 AM

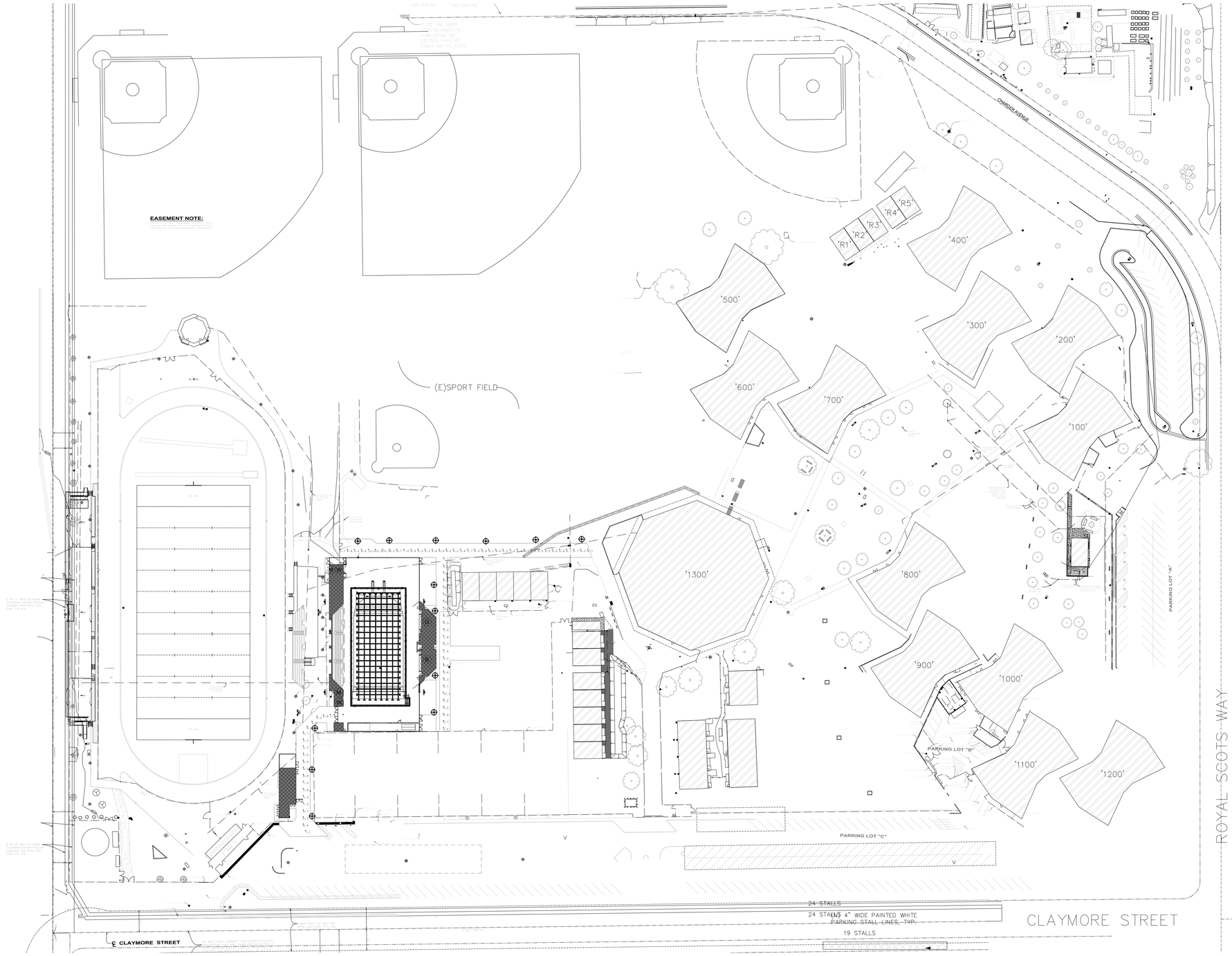

SITE EGRESS PHOTOMETRICS

N 1

1/60" = 1'-0"

Calculation Summary						
Label	CalcType	Units	Avg	Max	Min	Max/Min
Egress East	Illuminance	Fc	8.09	14.7	0.7	21.00
Egress North	Illuminance	Fc	7.79	12.5	3.4	3.68
Egress South	Illuminance	Fc	7.30	9.7	1.7	5.71

NOTE:

THIS LIGHTING CALCULATION REPRESENTS ILLUMINATION LEVELS CALCULATED FROM LABORATORY DATA TAKEN UNDER CONTROLLED CONDITIONS IN ACCORDANCE WITH ILLUMINATING ENGINEERING SOCIETY (IES) APPROVED METHODS.

8/2/2022 11:34:37 AM

IDENTIFICATION STAMP
DIV. OF THE STATE ARCHITECT
APP: 03-122664 INC:
REVIEWED FOR
SS ☑ FLS ☑ ACS ☑
DATE: 05/12/2023

pjhm architects

LICENSED ARCHITECT
RAYMOND W. SWARTZ
No. C15585
REN. 02/25
STATE OF CALIFORNIA

tk|sc COLLABORATIVE

11870 Pierce Street, Suite 160
Riverside, California 92505
951.299.4160 www.tk1sc.com

Project Leader - Nikolas Bruno
Electrical Lead - Nikolas Bruno
tk1sc Job #: B2202744.000

REGISTERED PROFESSIONAL ENGINEER
RAYMOND W. SWARTZ
No. E15610
EXP. 08/31/2024
ELECTRICAL
STATE OF CALIFORNIA

HIGHLAND HIGH SCHOOL
50M POOL & AQUATICS CENTER

KERN HIGH SCHOOL DISTRICT

SITE EGRESS PHOTOMETRICS

E-8.1

OC Office: 24461 Ridge Route Drive #100, Laguna Hills, CA 92653 Phone: 949.496.6159 SD Office: 804 Pier View Way #103, Oceanside, CA 92054 Phone: 760.730.5507 LA Office: 837 Traction Avenue, #410, Los Angeles, CA 90013 Phone: 213.278.0172 Web: pjhm.com

FIRE ALARM GENERAL NOTES

1. WALL MOUNTED, AUDIBLE NOTIFICATION DEVICES SHALL HAVE THEIR TOPS MOUNTED AT 90" MINIMUM AND 100" MAXIMUM ABOVE THE FINISHED FLOOR, AND NO CLOSER THAN 6" TO A HORIZONTAL STRUCTURE. (NFPA 72, SECTION 18.4.8.1). ALL WALL MOUNTED VISUAL APPLIANCES AND COMBINATION AUDIBLE/VISUAL APPLIANCES SHALL HAVE THEIR BOTTOMS MOUNTED AT 80" MINIMUM AND 96" MAXIMUM ABOVE FINISHED FLOOR AS MEASURED TO THE LENS. (NFPA 72, SECTION 18.5.5.1)
2. ALL EQUIPMENT SHALL BE U.L. AND CSFM LISTED.
3. ALL FIRE ALARM WIRING SHALL BE FLP (FIRE POWER LIMITED) OR FPLP (FIRE POWER LIMITED PLENUM) AS REQUIRED FOR APPLICATION. WIRING IN CONDUIT ABOVE GROUND MAY BE THHN OR THWN.
4. PER THE CEC, ALL WIRING IS TO BE PULLED THROUGH EACH JUNCTION BOX AND CONNECTED DIRECTLY TO EACH FIRE DEVICE. DO NOT SPLICE THE WIRE. THERE MUST BE AT LEAST 6' OF LEAD WIRE FROM THE BOX TO THE DEVICE. ALL BOXES TO BE SIZED PER CEC AND SHALL HAVE THEIR COVERS PAINTED RED WHERE APPLICABLE.
5. DO NOT DEVIATE FROM CONDUIT RUNS AS SHOWN ON FLOOR PLANS WITHOUT PRIOR APPROVAL FROM ELECTRICAL ENGINEER. FACTORS SUCH AS EXCESSIVE VOLTAGE DROP, ADDITIONAL PARTS, ENGINEERING, ETC., THAT ARE A RESULT OF CONDUIT RUN DEVIATIONS SHALL BE THE SOLE RESPONSIBILITY OF THE ELECTRICAL CONTRACTOR.
6. ALL FAN SHUTDOWN FUNCTIONS, DAMPER CLOSURES AND ASSOCIATED MECHANICAL SYSTEM FIRE ALARM INTERFACE SHALL BE BY MECHANICAL CONTRACTOR, AND SHALL BE COORDINATED WITH FIRE ALARM SYSTEM.
7. ALL FIRE ALARM DEVICE BACKBOXES, FIRE ALARM TERMINAL CABINETS, GUTTERS, JUNCTION BOXES AND ASSOCIATED CONDUITS SHALL BE FURNISHED AND INSTALLED BY ELECTRICAL CONTRACTOR UNLESS OTHERWISE NOTED. REFER TO FIRE ALARM SYMBOL LIST AND/OR MOUNTING DETAILS FOR ADDITIONAL INFORMATION. SYSTEM SUPPLIER PROVIDED BACKBOXES SHALL BE INSTALLED BY ELECTRICAL CONTRACTOR UNLESS OTHERWISE NOTED.
8. SMOKE DETECTOR TESTING SHALL BE PERFORMED TO ENSURE THAT EACH DETECTOR IS WITHIN ITS LISTED AND MARKED SENSITIVITY RANGE USING THE METHODS RECOMMENDED PER CFC, SECTION 907.8.4 AND NFPA 72, SECTION 14.4.4.3.4.
9. ALL WIRING, INITIATING DEVICES AND ANNUNCIATOR PANEL SHALL BE SUPERVISED TO THE PRINCIPAL POINT OF ANNUNCIATION. THE FIRE ALARM CONTROL PANEL TO SUPERVISE THE ANNUNCIATOR PANEL, ALL INITIATING AND INDICATING DEVICE CIRCUITS.
   A. INITIATING DEVICE CIRCUITS (IDC): CLASS B
   B. SIGNALING LINE CIRCUITS (SLC): CLASS B
   C. NOTIFICATION APPLIANCE CIRCUITS (NAC): CLASS B
10. ALL WIRING SHALL BE CUT FOR IN AND OUT. WIRING SHALL NOT BE LOOPED THROUGH DEVICES.
11. POINT AND COMMON ANNUNCIATION AND T-TAPPING ARE PROHIBITED. (T-TAPPING IS ALLOWABLE ON STYLE 4 SLC LOOPS).
12. PROVIDE 3/4" CONDUIT FROM FIRE ALARM CONTROL PANEL TO TELEPHONE BACKBOARD FOR OWNER PROVIDED CENTRAL STATION MONITORING.
13. CONTRACTOR TO FIELD VERIFY AND PROVIDE DECIBEL METER FOR TESTING OF AMBIENT NOISE LEVELS AUDIBLE DEVICES TO BE AT LEAST 15 DBA ABOVE THE AVERAGE AMBIENT SOUND LEVEL BUT NOT LESS THAN 75 DBA AT 10 FEET OR 5 DBA ABOVE THE MAXIMUM SOUND LEVEL BUT NOT MORE THAN 110 DBA AT THE MINIMUM HEARING DISTANCE. SOUND LEVEL SHALL BE MAINTAINED FOR DURATION OF AT LEAST 60 SECONDS (CFC, SECTION 907.5.2.1.1). THE CONTRACTOR SHALL ADJUST/INSTALL ALL DEVICES TO MAXIMIZE PERFORMANCE AND TO MINIMIZE FALSE ALARMS. PROVIDE UPDATED PLANS AND CALCULATIONS THROUGH THE "CHANGE ORDER" PROCESS WHEN INSTALLING ADDITIONAL DEVICES.
14. VISUAL DEVICES SHOULD NOT EXCEED 2 FLASHES PER SECOND AND SHOULD NOT BE SLOWER THAN 1 FLASH EVERY SECOND. THE DEVICE SHALL HAVE A PULSING LIGHT SOURCE NOT LESS THAN 15-CANDELA. VISUAL DEVICES WITHIN SAME VIEW FROM EACH OTHER SHALL BE SYNCHRONIZED.
15. ALL FIRE ALARM CIRCUITS SHALL BE IN CONDUIT, APPROVED SURFACE RACEWAY OR OPEN RUN ABOVE CEILINGS, UNDER FLOORS AND IN WALLS IN A NEAT AND PROTECTED MANNER AS INDICATED ON THE DESIGN DOCUMENTS. EXPOSED CIRCUITS ARE ONLY PERMITTED WHEN NOTED AS EXPOSED ON DESIGN DOCUMENTS. ALL CONDUITS SHALL BE 3/4" MINIMUM. CONTRACTOR TO VERIFY CONDUIT FILL PRIOR TO INSTALLATION.
16. ALL FLOW SWITCHES SHALL BE 2 WIRE WITH NON-ELECTRONIC RETARD TYPE SIMILAR TO THE SYSTEM SENSOR MODEL "WFD SERIES" ONLY.
17. ALL DEVICES IN THE ALARM SYSTEM SHALL BE COMPATIBLE AND INSTALLED PER MANUFACTURER'S SPECIFICATIONS.
18. SYSTEM SHALL BE FURNISHED AND INSTALLED BY AN AUTHORIZED DISTRIBUTOR.
19. FIRE ALARM SYSTEM INSTALLATION COMPANY SHALL BE UL LISTED (UUJS).
20. FIRE ALARM PANEL, REMOTES, AND COMPONENTS SHALL BE SECURED TO MOUNTING SURFACES PER MANUFACTURER'S SPECIFICATIONS. NO SINGLE DEVICE SHALL EXCEED THE WEIGHT OF 20 LBS. WITHOUT SPECIAL MOUNTING DETAILS.
21. SMOKE DETECTOR SHALL NOT BE ANY CLOSER THAN 1 FOOT FROM FIRE SPRINKLERS OR 3 FEET FROM ANY SUPPLY DIFFUSER. IN THE AREA OF CONSTRUCTION OR WHERE POSSIBLE DAMAGE/CONTAMINIATION COULD OCCUR ON NEWLY INSTALLED FIRE ALARM DEVICES, DEVICES SHALL BE COVERED UNTIL THAT AREA IS READY TO BE TURNED OVER TO THE OWNER. DETECTORS THAT HAVE BEEN INSTALLED PRIOR TO FINAL CLEAN-UP BY ALL TRADES SHALL BE CLEANED OR REPLACED IN ACCORDANCE WITH CFC, SECTION 907. CLEANING OR REPLACEMENT OF DEVICES THAT WERE MOUNTED AT THE REQUEST OF THE CONTRACTOR WILL NOT BE PERFORMED WITHOUT WRITTEN AUTHORIZATION THAT ASSUMES FINANCIAL RESPONSIBILITY FOR COSTS INCURRED. TESTING OF DETECTORS SHALL BE PERFORMED PER NFPA 72, SECTION 14.4.5.3 AND CFC, SECTION 907.8.4.
22. PER CBC, SECTION 11B-309 ACTIVATION OF INITIATING DEVICE SHALL NOT REQUIRE MORE THAN 5 LBS. (22.2N) OF FORCE OR REQUIRE TIGHT GRASPING PINCHING, OR TWISTING OF WRIST.
23. THE SYSTEM SHALL CONFORM TO CALIFORNIA CODE OF REGULATIONS (CCR) TITLES 19 AND 24 AS APPLICABLE TO THIS PROJECT.
24. THE VOICE/ALARM COMMUNICATION SYSTEM VOICE MESSAGE SHALL COMPLY WITH NFPA 72, SECTIONS 18.4 AND 24.4 FOR GENERAL REQUIREMENTS, INTELLIGIBILITY, AUDIBILITY, MESSAGE PRIORITY, TONES, ETC.
25. A DEDICATED 120V BRANCH CIRCUIT SHALL BE PROVIDED FOR FIRE ALARM EQUIPMENT. THIS CIRCUIT SHALL BE ENERGIZED FROM THE COMMON USE AREA PANEL AND SHALL HAVE NO OTHER OUTLETS. PROVIDE A LABEL WITHIN THE FACP AND EACH POWER SUPPPLY WITH THE PANEL NUMBER AND CIRCUIT NUMBER OF THE 120 VOLT POWER SOURCE. THE BREAKER SHALL HAVE A RED LOCKING DEVICE TO BLOCK THE HANDLE IN THE "ON" POSITION AND BE LABELED AS FOLLOWS:
   A. "FIRE ALARM" FOR FIRE ALARM SYSTEMS.
   B. "EMERGENCY COMMUNICATIONS" FOR EMERGENCY COMMUNICATION SYSTEMS, OR
   C. "FIRE ALARM/ECS" FOR COMBINATION FIRE ALARM AND COMMUNICATIONS SYSTEMS.
26. WHERE A DETECTOR IS INSTALLED ABOVE THE CEILING, THE DETECTOR SHALL BE EASILY ACCESSIBLE AND THE LOCATION OF THE DETECTOR SHALL BE CLEARLY MARKED. FOR DUCT SMOKE DETECTORS A REMOTE TEST STATION SHALL BE PROVIDED. ELECTRICAL CONTRACTOR SHALL FURNISH ACCESS PANELS TO AREAS THAT REQUIRE SERVICING, TROUBLE SHOOTING, ETC.
27. THE "END OF LINE RESISTANCE" OF EACH CIRCUIT SHALL BE TESTED IN THE PRESENCE OF THE I.O.R. AND SHALL NOT EXCEED THE LISTED MANUFACTURER'S MINIMUM OPERATING VOLTAGE.
28. UNDERGROUND AND EXTERIOR CONDUITS TO HAVE WATERTIGHT FITTINGS AND WIRE LISTED FOR WET LOCATIONS, IN ACCORDANCE WITH CEC, SECTIONS 110.11, 300.5(B), 300.6, 300.9, 310.10, AND 760.3(D).
29. FIRE ALARM SYSTEM IS A FULLY AUTOMATIC SYSTEM. CONTRACTOR TO UTILIZE AREA COVERAGE SMOKE DETECTORS AND ADDRESSABLE CONTROL RELAYS FOR THE SHUTDOWN AND/OR CLOSURE OF HVAC UNITS AND COMBINATION SMOKE/FIRE DAMPERS. CONTROL RELAYS TO BE LOCATED WITHIN 3FT OF THE CONTROLLED CIRCUIT OR APPLIANCE PER NFPA 72, SECTION 21.2.4.
30. PROVIDE (VIA CHANGE ORDER PROCESS) APPROPRIATE MANUFACTURER PRODUCT DATA SHEETS AND APPLICABLE CSFM LISTINGS FOR ALL SUBSTITUTED MANUFACTURER'S MATERIAL, EQUIPMENT OR APPLIANCES, TO DSA PRIOR TO START OF INSTALLATION.
31. CONTRACTOR SHALL PROVIDE FIRE WATCH FOR ALL OCCUPIED AREAS OF WORK WHERE THE REQUIRED FIRE ALARM SYSTEM IS OUT OF SERVICE FOR THE DURATION OF THE SYSTEM OUTAGE. FIRE WATCH AND SYSTEM/EQUIPMENT SHALL BE PER CFC, SECTION 901.7.
32. EMERGENCY VOICE/ALARM COMMUNICATION SYSTEMS SHALL BE DESIGNED AND INSTALLED IN ACCORDANCE WITH NFPA 72. THE OPERATION OF ANY AUTOMATIC FIRE DETECTOR, SPRINKLER WATERFLOW DEVICE OR MANUAL FIRE ALARM BOX SHALL AUTOMATICALLY SOUND AN ALERT TONE FOLLOWED BY VOICE INSTRUCTIONS GIVING APPROVED INFORMATION AND DIRECTIONS FOR A GENERAL OR STAGED EVACUATION IN ACCORDANCE WITH THE FIRE SAFETY EVACUATION PLANS REQUIRED BY CFC, SECTION 404 PER CBC/CFC, SECTION 907.5.2.2
33. EMERGENCY VOICE/ALARM COMMUNICATION SYSTEMS SHALL HAVE THE CAPABILITY TO BROADCAST LIVE VOICE MESSAGES BY PAGING ZONES ON A SELECTIVE AND ALL-CALL BASIS PER CBC/CFC, SECTION 907.5.2.2.2.
34. EMERGENCY VOICE/ALARM COMMUNICATION SYSTEMS SHALL BE PROVIDED WITH AN APPROVED EMERGENCY POWER SOURCE PER CBC/CFC, SECTION 907.5.2.2.5.
35. ALL MEMBRANE AND THROUGH-PENETRATIONS OF RATED ASSEMBLIES SHALL BE PROTECTED BY AN APPROVED FIRE STOP SYSTEM AS IDENTIFIED IN CBC, CHAPTER 7, UL OR OTHER LAB TESTING CRITERIA. APPROVED TYPES OF MATERIALS SHALL BE IDENTIFIED WITHIN THE FIRE ALARM SECTION OF THE PROJECT SPECIFICATIONS.
36. CONTROL PANELS AND REMOTE ANNUNCIATORS SHALL BE INSTALLED WITH THEIR BOTTOMS MOUNTED AT 48" ABOVE THE FINISHED FLOOR.
37. THE EXISTING CAMPUS FIRE ALARM SYSTEM SHALL BE MAINTAINED AND OPERATIONAL AT ALL TIMES DURING ALTERATIONS AND CONSTRUCTION. WHEN PORTIONS OF THE SYSTEM REQUIRE ALTERATIONS, THE REMAINDER OF THE SYSTEM SHALL BE KEPT IN SERVICE. IF NECESSARY TO SHUT DOWN ENTIRE FIRE ALARM SYSTEM, CONTRACTOR SHALL PROVIDE FIREWATCH FOR ALL OCCUPIED AREAS OF WORK UNTIL THE FIRE ALARM SYSTEM IS RETURNED TO OPERATIONAL SERVICE. FIREWATCH AND SYSTEM/EQUIPMENT IDENTIFICATION SHALL BE PER THE 2019 CFC, CHAPTER 33. LOCAL FIRE AUTHORITY AND OWNER SHALL BE NOTIFIED 48 HOURS IN ADVANCE OF ANY SHUT DOWN.

FIRE ALARM SYSTEM TESTING NOTES

1. INSTALLATION OF THE SYSTEMS SHALL NOT BE STARTED UNTIL DETAILED DESIGN DOCUMENTS AND SPECIFICATIONS, INCLUDING STATE FIRE MARSHAL LISTING NUMBERS FOR EACH COMPONENT OF THE SYSTEM HAS BEEN APPROVED BY DSA.
2. A STAMPED SET OF APPROVED FIRE ALARM DESIGN DOCUMENTS SHALL BE ON THE JOB SITE AND USED FOR INSTALLATION.
3. DISTRICT SHALL PROVIDE A CERTIFIED IMPARTIAL FIRE ALARM INSPECTOR. DSA, ARCHITECT/ ENGINEER AND OWNER SHALL BE NOTIFIED A MINIMUM OF 48 HOURS PRIOR TO THE FINAL INSPECTION AND/OR TESTING.
4. 100% OF THE SYSTEM IN CONTRACT WILL BE TESTED AND INSPECTED WITH THE CONTRACTOR OR CONTRACTOR'S SUB AND DISTRICT'S ETS STAFF MEMBER PRESENT. INSPECTION WILL INCLUDE, BUT NOT BE LIMITED TO, REMOVING STROBES/HORNS TO CHECK FOR "T-TAPS", REMOVING J-BOX COVERS TO CHECK WIRE GAGE AND SPLICES.
5. FOLLOW ALL REQUIREMENTS AND INSTRUCTIONS PROVIDED BY MANUFACTURER UPON INSTALLATION OF MANUFACTURER'S PRODUCTS AND DEVICES.
6. PRIOR TO REQUESTING FINAL APPROVAL OF THE INSTALLATION, THE INSTALLING CONTRACTOR SHALL FURNISH A WRITTEN STATEMENT TO THE FIRE CODE OFFICIAL THAT THE SUBJECT FIRE PROTECTION SYSTEM HAS BEEN INSTALLED IN ACCORDANCE WITH APPROVED PLANS AND HAS BEEN TESTED IN ACCORDANCE WITH THE MANUFACTURER'S SPECIFICATIONS AND THE APPROPRIATE INSTALLATION STANDARD. ANY DISCREPANCIES BETWEEN THE DRAWINGS AND THE CODE OR RECOGNIZED STANDARDS SHALL BE BROUGHT TO THE ATTENTION OF DSA AND THE ARCHITECT/ENGINEER OF THE PROJECT. ANY DEVIATIONS FROM THE DESIGN STANDARDS SHALL BE NOTED AND COPIES OF THE APPROVALS FOR SUCH DEVIATIONS SHALL BE ATTACHED TO THE WRITTEN STATEMENT. (CFC, SECTION 901.2.1)
7. UPON COMPLETION OF SYSTEM INSTALLATION, THE SYSTEM SHALL BE TESTED IN THE PRESENCE OF AND IN A MANNER ACCEPTABLE TO DSA/I.O.R. CONTRACTOR SHALL SUPPLY NECESSARY TESTING EQUIPMENT, INCLUDING A "SOUND LEVEL METER" TO CHECK ACCEPTABLE NOISE LEVELS OF AUDIBLE DEVICES. PROVIDE TEST RESULTS PER NFPA 72 TO ARCHITECT, D.S.A., I.O.R. AND TO LOCAL FIRE AUTHORITY, PER CFC, SECTION 907.8.2.
8. INSPECTION, TESTING AND MAINTENANCE SHALL BE IN COMPLIANCE WITH NFPA 72, CHAPTER 14, REACCEPTANCE TESTING SHALL BE IN COMPLIANCE WITH NFPA 72, SECTION 14.4.2.
9. LOCAL FIRE AUTHORITY NOTIFICATION TO BE DOCUMENTED AND RECORDED AS "UNAVAILABLE" OR "CONFIRM WHEN PRESENT".
10. PRIOR TO COMPLETION OF FIRE ALARM SYSTEM THE TWO WAY COMMUNICATION SYSTEM SHALL BE TESTED AND CERTIFIED VIA NFPA 72 EMERGENCY COMMUNICATION SYSTEM SUPPLEMENTARY RECORD OF INSPECTION AND TESTING FORM.
11. THE INSTALLING CONTRACTOR SHALL PROVIDE A COMPLETED RECORD OF COMPLETION PER NFPA 72, FIGURE 7.8.2(A) THROUGH (I) AS APPLICABLE. A COMPLETE RECORD OF THE TESTS AND OPERATIONS OF EACH SYSTEM SHALL BE KEPT UNTIL THE NEXT TEST AND FOR ONE YEAR AFTER PER NFPA 72, SECTION 7.7.1.
12. FIRE ALARM SYSTEM DOCUMENTS SHALL BE HOUSED IN THE DOCUMENT CABINET. THE DOCUMENT CABINET SHALL BE INSTALLED AT THE SYSTEM CONTROL UNIT OR AT ANOTHER APPROVED LOCATION AT THE PROTECTED PREMISES AS REQUIRED BY NFPA 72, SECTION 7.7.2.
13. THE INSTALLING CONTRACTOR SHALL PROVIDE SYSTEM PROGRAMMING FOR SUPERVISORY MONITORING PER CFC, SECTION 907.6.6. SUPERVISORY MONITORING SHALL BE TESTED AND VERIFIED AS SENDING CORRECT SIGNALS IN CONJUNCTION WITH FINAL ACCEPTANCE TEST. OWNER SHALL BE RESPONSIBLE FOR ESTABLISHING AND MAINTAINING A FIRE ALARM SYSTEM MONITORING CONTRACT.
14. THE VOICE/ALARM COMMUNICATION SYSTEM VOICE MESSAGE SHALL COMPLY WITH NFPA 72 SECTIONS 18.4 AND 24.4 FOR GENERAL REQUIREMENTS, INTELLIGIBILITY, AUDIBILITY, MESSAGE PRIORITY, TONES, ETC. REFER TO NFPA 72 ANNEX D, D.1 THROUGH D.6 FOR DETERMINING THE FUNDAMENTALS OF TEST PROTOCOL AND METHOD OF MEASURING INTELLIGIBILITY.

FIRE ALARM SYMBOLS LIST

SYMBOL	DESCRIPTION	MODEL	MANUFACTURER	BACKBOX	MOUNTING HEIGHT	C.S.F.M. NUMBER
FACP	EXISTING FIRE ALARM CONTROL PANEL AMD3-116564	NFS2-640	NOTIFIER	EXISTING	EXISTING	7165-0028:0243
VECP	FIRE/ALARM VOICE EVACUATION SYSTEM CONTROL PANEL WITH NETWORK MODULE	NFS2-3030/ DVC-EM NCA-2 (DISPLAY) HS-NCM (NETWORK)	NOTIFIER	PROVIDED	5'-6" A.F.F. TO TOP	7165-0028:0224
AMP	VOICE EVACUATION AUDIO AMPLIFIER	DAA2 SERIES	NOTIFIER	PROVIDED	5'-6" A.F.F. TO TOP	7165-0028:0224
FAPS	FIRE ALARM POWER SUPPLY	ACPS-610	NOTIFIER	PROVIDED	5'-6" A.F.F. TO TOP	7315-0028:0248
FATC	FIRE ALARM TERMINAL CABINET	N/A	BY ELECTRICIAN	18"SQ. x 6"D U.N.O. (RED)	VERIFY IN FIELD	N/A
MS	MANUAL PULL STATION (ADDRESSABLE)	NBG-12LX	NOTIFIER	4S DEEP BOX W/ SINGLE GANG RING	48" A.F.F. TO TOP OF ACTIVATING HANDLE	7150-0028:0199
SD	AREA SMOKE DETECTOR (ADDRESSABLE PHOTO)	FSP-951 B300-6 (BASE)	NOTIFIER	4S DEEP BOX W/ 3-0 RING	CEILING	7272-0028:0503 7300-1653:0109
MD	MULTI-CRITERIA DETECTOR (ADDRESS PHOTO/HEAT/IR)	FPTI-951 B300-6 (BASE)	NOTIFIER	4S DEEP BOX W/ 3-0 RING	CEILING	7272-0028:0510 7300-1653:0109
HD B	AREA HEAT DETECTOR (ADDRESSABLE FIXED 135°F)	FST-951 B300-6 (BASE)	NOTIFIER	4S DEEP BOX W/ 3-0 RING	CEILING, U.O.N.	7270-0028:0502 7300-1653:0109
HD	AREA HEAT DETECTOR (ADDRESSABLE FIXED 190°F)	FST-951H B300-6 (BASE)	NOTIFIER	4S DEEP BOX W/ 3-0 RING	ABOVE ACCESSIBLE CEILING, U.O.N.	7270-0028:0502 7300-1653:0109
CR	FIRE ALARM RELAY CONTROL MODULE	FRM-1	NOTIFIER	4S DEEP BOX	VERIFY IN FIELD	7300-0028:0219
M	FIRE ALARM MONITOR MODULE	FMM-1	NOTIFIER	4S DEEP BOX	VERIFY IN FIELD	7300-0028:0219
S WP	FIRE ALARM SPEAKER (WEATHERPROOF/WALL)	SPRK (RED)	SYSTEM SENSOR	WP BACKBOX PROVIDED	90" A.F.F. TO TOP	7320-1653:0201
SP cd	FIRE ALARM SPEAKER/STROBE (CEILING)	SPSCWL (WHITE)	SYSTEM SENSOR	4S DEEP BOX W/ 4S EXTENSION	CEILING	7320-1653:0505
F cd	FIRE ALARM STROBE (CEILING)	SCWL (WHITE)	SYSTEM SENSOR	4S DEEP BOX W/ 4S EXTENSION	CEILING	7125-1653:0504
SYNC	AUDIBLE/VISUAL SYNC MODULE	MDL3	SYSTEM SENSOR	5S DEEP BOX W/ 5S EXTENSION	VERIFY IN FIELD	7300-1653:0202
WF	SPRINKLER RISER WATERFLOW DETECTOR	WFDN SERIES	SAFE SIGNAL	VERIFY IN FIELD	VERIFY IN FIELD	7770-0328:0527
TS	SPRINKLER RISER TAMPER SWITCH	OSY2 SERIES	SAFE SIGNAL	VERIFY IN FIELD	VERIFY IN FIELD	7770-0328:0524
B WP	SPRINKLER RISER BELL (WEATHERPROOF) (120VAC)	SSV120-10	SYSTEM SENSOR	WBB WP BACKBOX	90" A.F.F. TO TOP	7135-1653:0100
J	FIRE ALARM JUNCTION BOX	N/A	BY ELECTRICIAN	4S BOX, U.N.O.	VERIFY IN FIELD	N/A

A.F.F.	ABOVE FINISHED FLOOR	N/A	NOT APPLICABLE
E.O.L.	END OF LINE RESISTOR	U.N.O.	UNLESS NOTED OTHERWISE
(E)	EXISTING DEVICE	VL	VERIFY LOCATION IN FIELD
F.B.O.	FURNISHED BY OTHERS	WP	WEATHERPROOF DEVICE
TSP	TWISTED SHIELDED PAIR	cd	INDICATED CANDELA RATING OF STROBE DEVICE

SEQUENCE OF OPERATIONS

ACTION	120 VOLT POWER FAILURE	SYSTEM TROUBLE, WIRING FAULT OR OPEN, GROUND FAULT, LOW BATTERY, CIRCUIT SHORT	MANUAL PULL STATION	AREA SMOKE DETECTOR	AREA OF ATTIC HEAT DETECTOR	SPRINKLER WATER FLOW SWITCH	SPRINKLER VALVE TAMPER SWITCH (SUPERVISORY)
SOUND CONTROL PANEL TROUBLE BUZZER	YES	YES	NO	NO	NO	NO	NO
SOUND CONTROL PANEL SUPERVISORY BUZZER	NO	NO	NO	NO	NO	NO	YES
SOUND CONTROL PANEL ALARM BUZZER	NO	NO	YES	YES	YES	YES	NO
ACTIVATE RELAY FOR CENTRAL STATION MONITORING	YES	YES	YES	YES	YES	YES	YES
ANNUNCIATE AT FIRE ALARM CONTROL PANEL (ALARM)	NO	NO	YES	YES	YES	YES	NO
ANNUNCIATE AT FIRE ALARM CONTROL PANEL (TROUBLE)	YES	YES	NO	NO	NO	NO	NO
ANNUNCIATE AT REMOTE ANNUNCIATOR PANEL (ALARM)	NO	NO	YES	YES	YES	YES	NO
ANNUNCIATE AT REMOTE ANNUNCIATOR PANEL (TROUBLE)	YES	YES	NO	NO	NO	NO	NO
ACTIVATE AUDIBLE NOTIFICATION ALARM SIGNAL THROUGHOUT CAMPUS	NO	NO	YES	YES	YES	YES	NO
ACTIVATE VISUAL NOTIFICATION ALARM SIGNAL THROUGHOUT CAMPUS	NO	NO	YES	YES	YES	YES	NO
ACTIVATE AUDIBLE NOTIFICATION ALARM SIGNAL THROUGHOUT BLDG	NO	NO	YES	YES	YES	YES	NO
ACTIVATE VISUAL NOTIFICATION ALARM SIGNAL THROUGHOUT BLDG	NO	NO	YES	YES	YES	YES	NO
SOUND SPRINKLER BELL ALARM —	NO	NO	NO	NO	NO	YES	NO
SHUT DOWN ASSOCIATED AIR HANDLING (HVAC) THROUGHOUT BUILDING	NO	NO	NO	YES	NO	YES	NO
NOTIFY FIRE DEPARTMENT VIA MONITORING STATION —	NO	NO	YES	YES	YES	YES	NO
RETURN LIGHTING TO 100% OF LUMEN OUTPUT UPON ACTIVATION OF SYSTEM	NO	NO	YES	YES	YES	YES	NO
SHUTDOWN AUTONOMOUS PUBLIC ADDRESS SYSTEM UPON ACTIVATION OF SYSTEM	NO	NO	YES	YES	YES	YES	NO
SOUND AN ALERT TONE FOLLOWED BY VOICE INSTRUCTION	NO	NO	YES	YES	YES	YES	NO

PLAN REVIEW REQUIREMENTS AND APPLICABLE CODES AND STANDARDS

1.0 FIRE ALARM PLAN REVIEW

A. FIRE ALARM PLAN REVIEW

1. AS PART OF THE FIRE ALARM PLAN REVIEW, PLANS AND SPECIFICATIONS FOR THE FIRE ALARM SYSTEM HAVE BEEN INCLUDED FOR REVIEW AND COMMENT BY THE DIVISION OF THE STATE ARCHITECT, FIRE & LIFE SAFETY.
2. THE FLOOR PLANS AND SPECIFICATIONS INCLUDE THE FOLLOWING: LOCATIONS OF ALL ALARM-INITIATING AND SIGNALING DEVICES, CONTROL AND TROUBLE SIGNALING EQUIPMENT (FIRE ALARM CONTROL PANEL, BUILDING ANNUNCIATION (FIRE ALARM ANNUNCIATOR).

B. FIRE ALARM COMPONENTS

1. PROVIDE CALIFORNIA STATE FIRE MARSHAL LISTING SHEETS AND U.L. LISTING NUMBERS FOR EACH COMPONENT.
2. EQUIPMENT POWER CONNECTIONS.
3. RISER DIAGRAM SHOWING EACH COMPONENT.
4. VOLTAGE DROP CALCULATIONS.
5. POWER CONNECTIONS TO APPLICABLE COMPONENTS.
6. WIRE AND/OR CABLING TYPES AND SIZES.
7. PROVIDE CATALOG DATA SHEETS FOR ALL FIRE ALARM SYSTEM COMPONENTS.
8. CONTRACTOR TO FURNISH STATEMENT OF COMPLIANCE BEFORE REQUESTING FINAL APPROVAL OF INSTALLATION IN ACCORDANCE WITH CFC, SECTION 901.2.1.
9. A SATISFACTORY TEST OF THE ENTIRE SYSTEM SHALL BE MADE IN THE PRESENCE OF THE PROJECT INSPECTOR AND, IF APPLICABLE, LOCAL FIRE AUTHORITY.
10. THE INSTALLER SHALL SUPPLY THE OWNER WITH A WRITTEN OPERATING, TESTING AND MAINTENANCE INSTRUCTIONS, POINT-TO-POINT AS BUILT DRAWINGS AND EQUIPMENT SPECIFICATIONS. AS BUILT RECORDS SHALL BE MAINTAINED ON PREMISES FOR A MINIMUM OF THREE YEARS PER CFC, SECTION 901.6.3.

C. SCOPE OF WORK

1. INSTALL A FULLY AUTOMATIC, ADDRESSABLE, FIRE ALARM SYSTEM WITH AN EMERGENCY VOICE/ALARM COMMUNICATION SYSTEM WITHIN ALL BUILDINGS IN SCOPE OF PROJECT AS DEFINED PER CFC, SECTION 907.2.3 AND NFPA 72.
2. FIRE ALARM SYSTEM SHALL TRANSMIT THE ALARM, SUPERVISORY AND TROUBLE SIGNALS TO AN APPROVED SUPERVISING STATION IN ACCORDANCE WITH NFPA 72. THE SUPERVISING STATION SHALL BE U.L. LISTED AS UUFX (CENTRAL STATION) PER CFC, SECTION 907.6.6.3.
3. FIRE SPRINKLER SYSTEM UTILIZED FOR HEAT DETECTION IN ALL ABOVE CEILING, ATTIC SPACES AND CONCEALED COMBUSTIBLE AREAS. PROVIDE HEAT DETECTORS WHERE FIRE SPRINKLERS HAVE BEEN OMITTED PER NFPA 72 AND NFPA 13.

2.0 LIST OF CURRENT CALIFORNIA CODE OF REGULATIONS

APPLICABLE CODES AS OF MARCH 5, 2022

2022 California Administrative Code (CAC), Part 1, Title 24, C.C.R.

2019 California Building Code (CBC), Volumes 1 & 2, Part 2, Title 24, C.C.R. (2018 International Building Code of the International Code Council, with California Amendments.)

2019 California Electrical Code (CEC), Part 3, Title 24, C.C.R. (2017 National Electric Code of the National Fire Protection Assoc., NFPA)

2019 California Mechanical Code (CMC), Part 4, Title 24, C.C.R. (2018 Uniform Mechanical Code of the International Association of Plumbing and Mechanical Officials, IAPMO.)

2019 California Plumbing Code (CPC), Part 5, Title 24, C.C.R. (2018 Uniform Plumbing Code of the International Association of Plumbing and Mechanical Officials, IAPMO.)

2019 California Energy Code, Part 6, Title 24, C.C.R.

2019 California Historical Building Code, Title 24, C.C.R.

2019 California Fire Code (CFC), Part 9, Title 24, C.C.R. (2018 International Fire Code with California Amendments)

2019 California Existing Building Code (CEBC), Part 10, Title 24, C.C.R. (2018 International Existing Building Code of the International Code Council, with amendments)

2019 California Green Building Standards Code (CALGreen), Part 11, Title 24, C.C.R.

2019 California Referenced Standards Code, Part 12, Title 24, C.C.R.

LIST OF FEDERAL CODES AND STANDARDS (if applicable)

Americans with Disabilities Act (ADA), Title II or Title III

For Title II: Uniform Federal Accessibility Standards (UFAS) or ADA Standards for Accessible Design (Appendix A of 28 CFR Part 36.)

For Title III: ADA Standards for Accessible Design (Appendix A of 28 CFR Part 36.)

Americans with Disabilities Act Accessibility Guidelines (ADAAG) (with amendments through September 2002)

PARTIAL LIST OF APPLICABLE NFPA STANDARDS:

NFPA 13-Automatic Sprinkler Systems (CA Amended)	2016 Edition
NFPA 14-Standpipes Systems (CA Amended)	2016 Edition
NFPA 17-Standard for Dry Chemical Extinguishing Systems	2017 Edition
NFPA 17a-Standard for Wet Chemical Systems	2017 Edition
NFPA 20-Installation Stationary Pumps for Fire Protection	2016 Edition
NFPA 22-Water tanks for Private Fire Protection	2013 Edition
NFPA 24-Installation of Private Fire Service Mains (CA Amended)	2016 Edition
NFPA 72-National Fire Alarm and Signaling Code (CA Amended)	2016 Edition
NFPA 80-Fire Door and Other Opening Protectives	2016 Edition
NFPA 92-Standard for Smoke Control Systems	2015 Edition
NFPA 253-Critical Radiant Flux of Floor Covering Systems	2015 Edition
NFPA 720-Carbon Monoxide (CO) Detection and Warning	2015 Edition
NFPA 2001-Clean Agent Fire Extinguishing Systems (CA Amended)	2015 Edition
ICC 300-ICC Standards on Bleachers, Folding and Telescoping Seating and Grandstands	2017 Edition
UL 38-Manual Operating Signal Boxes (with revisions through February 2, 2005 as amended)	1999 Edition
UL 268-Smoke Detectors for Fire Alarm Systems	2009 Edition
UL 268A-Smoke Detectors Duct Applications (with revisions through October 22, 2003 as amended)	2009 Edition
UL 300-Fire Testing of Fire Extinguishing Systems for Protection Of Restaurant Cooking Areas (with revisions through December 2014 as amended)	2005 Edition
UL 464-Audible Signal Appliances (with revisions through October 10, 2003 as amended)	2003 Edition
UL 521-Heat Detectors for Fire Protective Signaling Systems (with revisions through July 20, 2005 as amended)	1999 Edition
UL 864-Control Units for Fire Protective Signaling Systems (with revisions through December 2014)	2003 Edition

Reference code section for NFPA Standards-2019 CBC (SFM) Chapter 35

See Chapter 35 for State of California amendments to NFPA Standards.

FIRE ALARM WIRE LEGEND

WIRE DESIGNATION	WIRE IN CONDUIT	WIRE IN CONDUIT UNDERGROUND/WET LOC.	UNDERGROUND/WET WIRE DESIGNATION
INITIATING CIRCUIT Z	2 CONDUCTOR #18 FPL TWISTED/ UNSHIELDED WITH OVERALL JACKET	2 CONDUCTOR #18 FPL TWISTED/ UNSHIELDED W

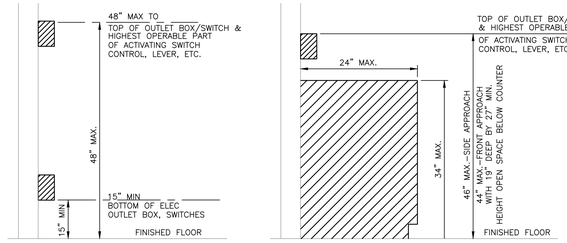

ALL DEVICE HEIGHTS DEPICTED SHALL BE MODIFIED AS REQUIRED BY GOVERNING BUILDING CODES. CONTRACTOR TO VERIFY/RECONCILE APPLICABLE CODE REQUIREMENTS AND ANY DEVICE HEIGHT REQUIREMENTS DEPICTED ON ARCHITECTURAL OR INTERIOR DESIGN PLANS & SPECIFICATIONS PRIOR TO DEVICE ROUGH-IN. CONFLICTS OR LACK OF MOUNTING HEIGHT SPECIFICITY ON THE ARCHITECTURAL OR INTERIOR DESIGN PLANS & SPECIFICATIONS SHALL BE CAUSE FOR THE CONTRACTOR TO ISSUE A FORMAL WRITTEN RFI FOR RESOLUTION. DEVICE MOUNTING HEIGHT CLARIFICATIONS/SPECIFICATIONS SHALL NOT RESULT IN AN ADDITIONAL COST TO THE OWNER – CONTRACTOR SHALL INCLUDE ALL COSTS IN BASE BID.

MOUNTING HEIGHT OVER OBSTRUCTION DETAIL 11

SCALE: NTS

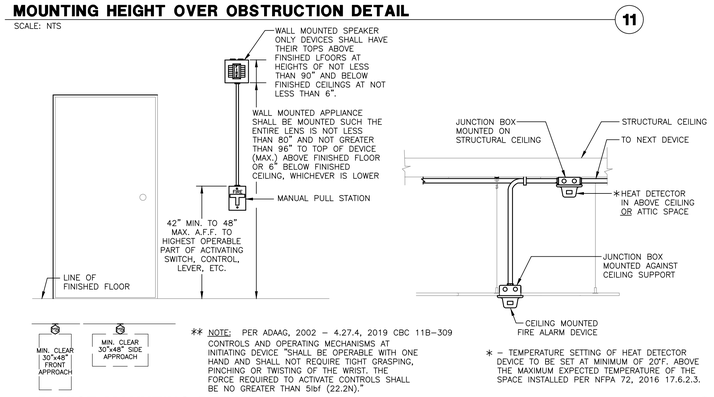

** NOTE: PER ADAAG, 2002 – 4.27.4, 2019 CBC 11B–309 CONTROLS AND OPERATING MECHANISMS AT INITIATING DEVICE "SHALL BE OPERABLE WITH ONE HAND AND SHALL NOT REQUIRE TIGHT GRASPING, PINCHING OR TWISTING OF THE WRIST. THE FORCE REQUIRED TO ACTIVATE CONTROLS SHALL BE NO GREATER THAN 5lbf (22.2N)."

* – TEMPERATURE SETTING OF HEAT DETECTOR DEVICE TO BE SET AT MINIMUM OF 20°F, ABOVE THE MAXIMUM EXPECTED TEMPERATURE OF THE SPACE INSTALLED PER NFPA 72, 2016 17.6.2.3.

DEVICE MOUNTING DETAILS 10

SCALE: N.T.S.

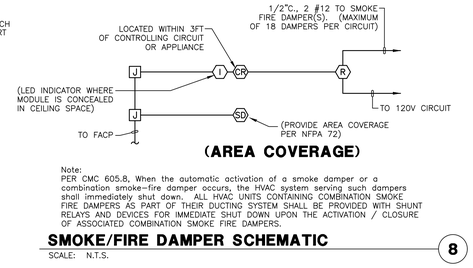

(AREA COVERAGE)

Note:
PER CMC 605.8, When the automatic activation of a smoke damper or a combination smoke-fire damper occurs, the HVAC system serving such dampers shall immediately shut down. ALL HVAC UNITS CONTAINING COMBINATION SMOKE FIRE DAMPERS AS PART OF THEIR DUCTING SYSTEM SHALL BE PROVIDED WITH SHUNT RELAYS AND DEVICES FOR IMMEDIATE SHUT DOWN UPON THE ACTIVATION / CLOSURE OF ASSOCIATED COMBINATION SMOKE FIRE DAMPERS.

SMOKE/FIRE DAMPER SCHEMATIC 8

SCALE: N.T.S.

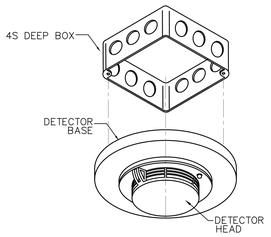

DETECTOR MOUNTING DETAIL 7

SCALE: N.T.S.

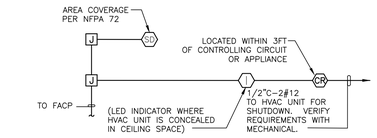

HVAC SHUT DOWN SCHEMATIC (AREA COVERAGE) 4

SCALE: N.T.S.

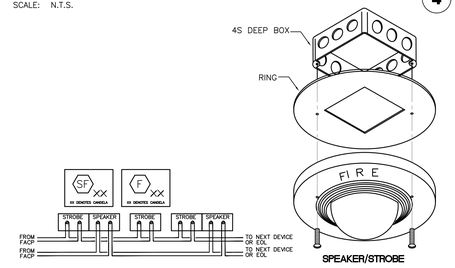

SPEAKER/STROBE

CEILING MTD. AUDIBLE/VISUAL 3

SCALE: N.T.S.

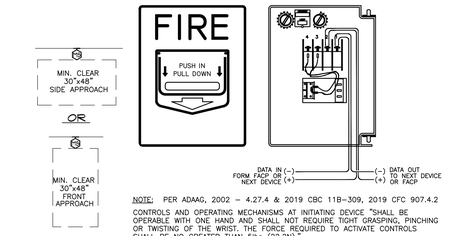

NOTE: PER ADAAG, 2002 – 4.27.4 & 2019 CBC 11B–309, 2019 CFC 907.4.2

CONTROLS AND OPERATING MECHANISMS AT INITIATING DEVICE "SHALL BE OPERABLE WITH ONE HAND AND SHALL NOT REQUIRE TIGHT GRASPING, PINCHING OR TWISTING OF THE WRIST. THE FORCE REQUIRED TO ACTIVATE CONTROLS SHALL BE NO GREATER THAN 5lbs (22.2N)."

PULL STATION DETAIL 2

SCALE: N.T.S.

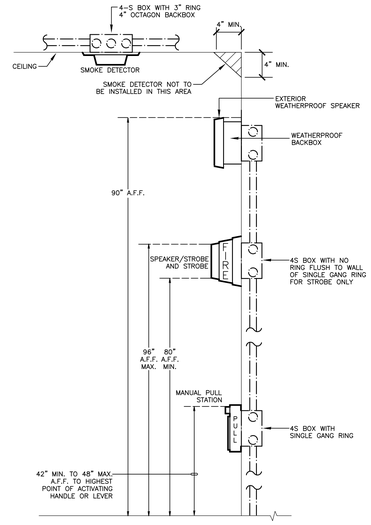

GENERAL NOTES:

1. THE ENTIRE LENS OF STROBE LIGHTS MUST BE BETWEEN 80" AND 96" ABOVE FLOOR FINISH. (2016 NFPA 72 18.5.5)
2. MANUAL FIRE ALARM BOXES SHALL BE INSTALLED IN ACCORDANCE WITH 2019 CFC SECTION 907.4.2.
3. WHEN APPLICABLE, MANUAL FIRE ALARM BOXES SHALL BE LOCATED NOT MORE THAN 5 FEET FROM THE ENTRANCE TO EACH EXIT. ADDITIONAL MANUAL FIRE ALARM BOXES SHALL BE LOCATED SO THAT TRAVEL DISTANCE TO THE NEAREST BOX DOES NOT EXCEED 200 FEET. (2019 CFC 907.4.2.1)

MOUNTING HEIGHT DETAIL 1

SCALE: N.T.S.

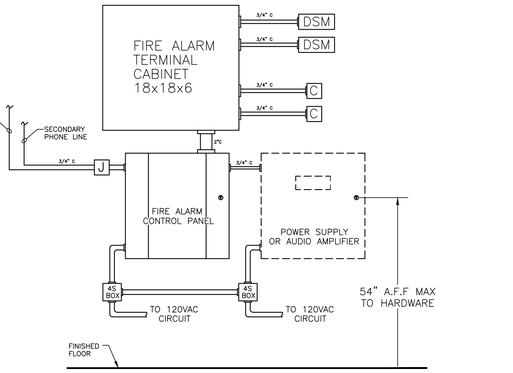

FIRE ALARM PANEL/POWER SUPPLY MOUNTING ELEVATION 6

SCALE: N.T.S.

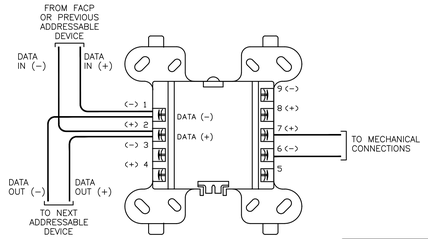

CONTROL MODULE WIRING

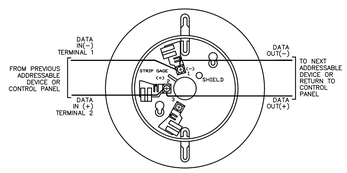

ADDRESSABLE SMOKE/HEAT DETECTOR

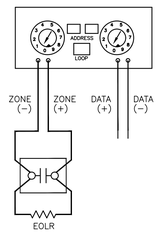

MANUAL PULL STATION

DEVICE WIRING DETAILS 5

SCALE: N.T.S.

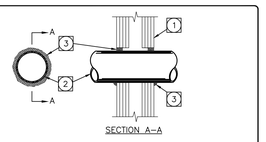

SECTION A–A

PENETRATION THRU GYPSUM BOARD WALL
NO SCALE

System No.W-L-1252
January 22, 2015
F Ratings – 1, 2, 3 and 4 Hr (See Items 1 and 3)
T Ratings – 0 Hr
L Rating At Ambient – less than 1 CFM/sq ft
L Rating At 400 F – less than 1 CFM/sq ft

1. Wall Assembly – The 1, 2, 3 or 4 hr fire-rated gypsum wallboard/stud wall assembly shall be constructed of the materials and in the manner described in the individual U400, V400 or W400 Series Wall or Partition Designs in the UL Fire Resistance Directory and shall include the following construction features:
   A. Studs – Wall framing may consist of steel channel studs. Steel studs to be min 3-1/2 in. (89 mm) wide by 1-3/8 in. (35 mm) deep channels spaced max 24 in. (610 mm) OC.
   B. Gypsum Board* – Nom 1/2 or 5/8 in. (13 or 16 mm) thick, 4 ft. (122 cm) wide with square or tapered edges. The gypsum wallboard type, thickness, number of layers, fastener type and sheet orientation shall be as specified in the individual U300 or U400 Series Design in the UL Fire Resistance Directory. Max diam of opening is 28 in. (680 mm).
   The hourly F and FH Ratings of the firestop system are equal to the hourly fire rating of the wall assembly in which it is installed.
2. Through Penetrant – One metallic pipe, conduit or tube to be installed either concentrically or eccentrically within the firestop system. The annular space between the pipe, conduit or tube and periphery of opening shall be min 0 in. (point contact) to max 7/8 in. (22 mm). Pipe, conduit or tubing may be rigid or flexible on both side of wall assembly.
   A. Steel Pipe – Nom 4 in. (102 mm) diam (or smaller) Schedule 10 (or heavier) steel pipe.
   B. Iron Pipe – Nom 4 in. (102 mm) diam (or smaller) cast or ductile iron pipe.
   C. Conduit – Nom 4 in. (102 mm) diam (or smaller) rigid steel conduit.
   D. Conduit – Nom 4 in. (102 mm) diam (or smaller) steel electrical metallic conduit.
   E. Copper Tubing – Nom 4 in. (102 mm) diam (or smaller) Type L (or heavier) copper tubing.
   F. Copper Pipe – Nom 4 in. (102 mm) diam (or smaller) Regular (or heavier) copper pipe.
3. Fill, Void or Cavity Material* – Sealant – 1. Fill material applied within annulus , flush with both surfaces of wall. Type and thickness of sealant is dependent on F and FH Ratings as indicated in Table below. An additional 1/2 in. (13 mm) diameter bead of sealant applied at penetrant/gypsum board interface at point contact location on both surfaces of wall.
   HILTI CONSTRUCTION CHEMICALS, DIV OF HILTI INC –– FS-ONE Sealant, FS-ONE MAX Intumescent Sealant or CP 606 Sealant

F, FH RATINGS (HR)	SEALANT TYPE	SEALANT THICKNESS, IN. (MM)
1,2	FS–ONE, FS–ONE MAX OR CP 606	5/8 (16)
3	FS–ONE, FS–ONE MAX OR CP 606	1 (25)
4	FS–ONE, FS–ONE MAX	1 (25)

*Bearing the UL Classification Marking

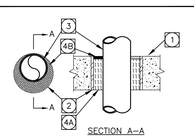

SECTION A–A

PENETRATION THRU CONCRETE WALL OR FLOOR
NO SCALE

System No. C-AJ-1630
DECEMBER 20, 2013
F Ratings – 2, 3, and 4 Hr (See Item 4)
T Rating – 0 Hr
L Rating At Ambient – less than 1 CFM/sq ft
L Rating At 400 F – less than 1 CFM/sq ft
W Rating – Class I (See Item 4)

1. Floor or Wall Assembly – 1. See Configuration A above. Reinforced lightweight or normal weight (100–150 pcf or 1600–2400 kg/cu meter) concrete as specified in the Table in Item 4 below. Wall may also be constructed of any UL Classified Concrete Blocks*. Max diam of sleeved opening is 32 in. (813 mm).
   See Concrete Blocks (CAZT) category in the Fire Resistance Directory for names of manufacturers.
1A. Floor Assembly – See Configuration B above. Min 6 in. (152 mm) thick UL Classified hollow–core Precast Concrete Units*. Max diam of opening is 7 in. (178 mm).
   See Precast Concrete Units (CFTV) category in the Fire Resistance Directory for names of manufacturers.
2. Steel Sleeve (Optional) – Nom 32 in. (813 mm) diam (or smaller) Schedule 10 (or heavier) steel pipe sleeve cast or grouted into floor or wall assembly, flush with both surfaces of floor or wall. As an option, sleeve may extend max 1 in. (25 mm) above top surface of floor or beyond one or both surfaces of wall. Steel sleeve may be used in 2 and 3 hr F Rated systems only.
3. Through Penetrants – One metallic pipe, conduit or tubing to be installed either concentrically or eccentrically within the firestop system. Pipe, conduit or tubing to be rigidly supported on both sides of floor or wall assembly. See Table in Item 4 for sizes of penetrants A, B, D and E that may be used. See Item 3C below for size of conduit that may be used. The annular space shall be as specified in the Table in Item 4 below. The following types and sizes of metallic pipes, conduits or tubing may be used:
   A. Steel Pipe – –– Schedule 10 (or heavier) steel pipe.
   B. Iron Pipe – Cast or ductile iron pipe.
   C. Conduit – Nom 4 in. (102 mm) diam (or smaller) steel electrical metallic tubing or nom 6 in. (152 mm) diam (or smaller) steel conduit.
   D. Copper Tubing – Type L (or heavier) copper tubing.
   E. Copper Pipe – Regular (or heavier) copper pipe.
4. Firestop System – The F Rating of the system is dependent upon the type of concrete, thickness of concrete, annular space, fill and packing material thickness, packing material density and penetrant size as shown in the Table below. W Rating applies to annular spaces of min 0 in. (point contact) to max 1–7/8 in. and to Configuration A detail only.

F RATING HR	MIN THICK CONCRETE IN.	ANNULAR SPACE IN.	MIN THICK PACKING MTL IN.	MIN DENSITY PACKING MTL PCF KG/CU MTR	MIN THICK FILL MTL IN.	PENETRANT SIZE IN. DIAM (OR SMALLER) COPPER	STEEL, IRON
2	5–1/2(140)	0 TO 1–7/8 (0 TO 48)	5 (127)	4 (64)	1/2 (13)	4 (102)	16 (406)
3	4–1/2(114)	0 TO 2–1/8 (0 TO 54)	4–1/4 (108)	4 (64)	1/4 (6)	6 (152)	30 (762)
4	5–1/2(140)	0 TO 1–7/8 (0 TO 48)	5 (127)	4 (64)	1/2 (13)	4 (102)	8 (203)

A. Packing Material –– Min 4–1/4 or 5 in. (108 or 127 mm) thickness of min 4.0 pcf (64 kg/cu meter) mineral wool batt insulation firmly packed into opening as a permanent form as specified in the Table above. Packing material to be recessed from top surface of floor or top and bottom surfaces of wall or ends of sleeve, as required to accommodate the required thickness of fill material. For floor or wall assemblies rated for 3 hr or less, the packing material shall be installed flush with the bottom surface of the floor and the remaining half of the mineral wool packing material installed at the top of the opening and recessed from the top surface of the floor to accommodate the required thickness of the fill material.

B. Fill, Void or Cavity Material* –– Caulk –– Min 1/4 or 1/2 in. (6 or 13 mm) thickness of fill material as specified in the Table above applied within the annulus, flush with top surface of floor or top and bottom surfaces of wall. For floor or wall assemblies rated for 3 hr or less, the annulus between pipe and concrete or sleeve, a min 1/2 in. (13 mm) diam bead of fill material shall be applied. As an option, for hollow–core floors, the packing material (Item 4A) on the bottom surface of the floor may be recessed to accommodate a 1/4 in. (6 mm) depth of fill material installed flush with bottom surface of floor.
HILTI CONSTRUCTION CHEMICALS, DIV OF HILTI INC –– CFS–S SIL GG (floors or walls) and CFS–S SIL SL (floors only)

*Bearing the UL Classification Mark

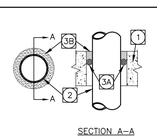

SECTION A–A

PENETRATION THRU CONCRETE FLOOR
NO SCALE

SYSTEM NO. C-AJ-1276
April 20, 2012
F RATING–3 HR
T RATING–0 HR

Floor or Wall Assembly – 1. Floor or Wall Assembly –– Min 4–1/2 in. (114 mm) thick reinforced lightweight or normal weight (100–150 pcf or 1600–2400 kg/m3) concrete. Wall may also be constructed of any UL Classified Concrete Blocks*. Max diam of opening is 9 in. (152 mm).

See Concrete Blocks (CAZT) category in the Fire Resistance Directory for names of manufacturers.

2. Through Penetrants – One metallic pipe, conduit or tubing to be centered within the firestop system. A nom annular space of 3/4 in. (19 mm) is required within the firestop system. Pipe, conduit or tubing to be rigidly supported on both sides of floor or wall assembly. The following types and sizes of metallic pipes, conduits or tubing may be used:

   A. Steel Pipe – Nom 4 in. (102 mm) diam (or smaller) Schedule 10 (or heavier) steel pipe.
   B. Conduit – Nom 4 in. (102 mm) diam (or smaller) steel electrical metallic tubing or steel conduit.

3. Firestop System – The firestop system shall consist of the following:
   A. Packing or Forming Materials –– Optional –– One of the following packing or forming materials may be used:

   A1. Foam Backer Rod –– Foam backer rod tightly packed into the opening as a permanent form. Packing material to be recessed from the top surface of floor or both surfaces of wall as required to accommodate the required thickness of putty.

   A2. Mineral Wool Batt Insulation –– Min 4 pcf (64 kg/m3), tightly packed into the opening as a permanent form. Packing material to be recessed from the top surface of floor or both surfaces of wall as required to accommodate the required thickness of putty.

   A3. Forming Material* –– Forming material to be foamed into the opening as a permanent form. Forming material to be recessed from the top surface of floor or both surfaces of wall as required to accommodate the required thickness of fill material.
   HILTI CONSTRUCTION CHEMICALS, DIV OF HILTI INC –– CP812 or CP-45 CJP Foam Sealant

   B. Fill, Void or Cavity Material* –– Putty –– Min 1 in. (25 mm) thickness of putty applied within the annulus, flush with top surface of floor or with both surfaces of wall as required.
   HILTI CONSTRUCTION CHEMICALS, DIV OF HILTI INC –– CP 618 Firestop Putty Stick

*Bearing the UL Classification Mark

THROUGH RATED WALL OR FLOOR PENETRATIONS (U.L. LISTINGS) 9

SCALE: N.T.S.

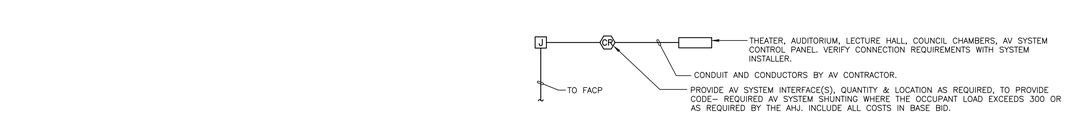

AUDIO VISUAL SYSTEM SHUNT SCHEMATIC 12

SCALE: N.T.S.

IDENTIFICATION STAMP
DIV. OF THE STATE ARCHITECT
APP: 03-122664 INC:
REVIEWED FOR
SS ☑ FLS ☑ ACS ☑
DATE: 05/12/2023

pjhm architects
LICENSED ARCHITECT
RICHARD W. RISHEL
NO. C15585
REN. 02/25
STATE OF CALIFORNIA
tk|sc COLLABORATIVE
11870 Pierce Street, Suite 160
Riverside, California 92505
951.299.4160 www.tk1sc.com
Project Leader - Nikolas Bruno
Electrical Lead - Nikolas Bruno
tk1sc Job #: B2202744.000
REGISTERED PROFESSIONAL ENGINEER
RAYMOND W. SPARKS
No. E15610
Exp. 12/31/2024
ELECTRICAL
STATE OF CALIFORNIA
OC Office: 24461 Ridge Route Drive #100, Laguna Hills, CA 92653 Phone: 949.496.6191 SD Office: 804 Pier View Way #103, Oceanside, CA 92054 Phone: 760.730.5527 LA Office: 837 Traction Avenue, #410, Los Angeles, CA 90013 Phone: 213.278.0172 Web: pjhm.com

HIGHLAND HIGH SCHOOL
50M POOL & AQUATICS CENTER
KERN HIGH SCHOOL DISTRICT

FIRE ALARM DETAILS

EFA–1.0

8/2/2022 11:34:37 AM

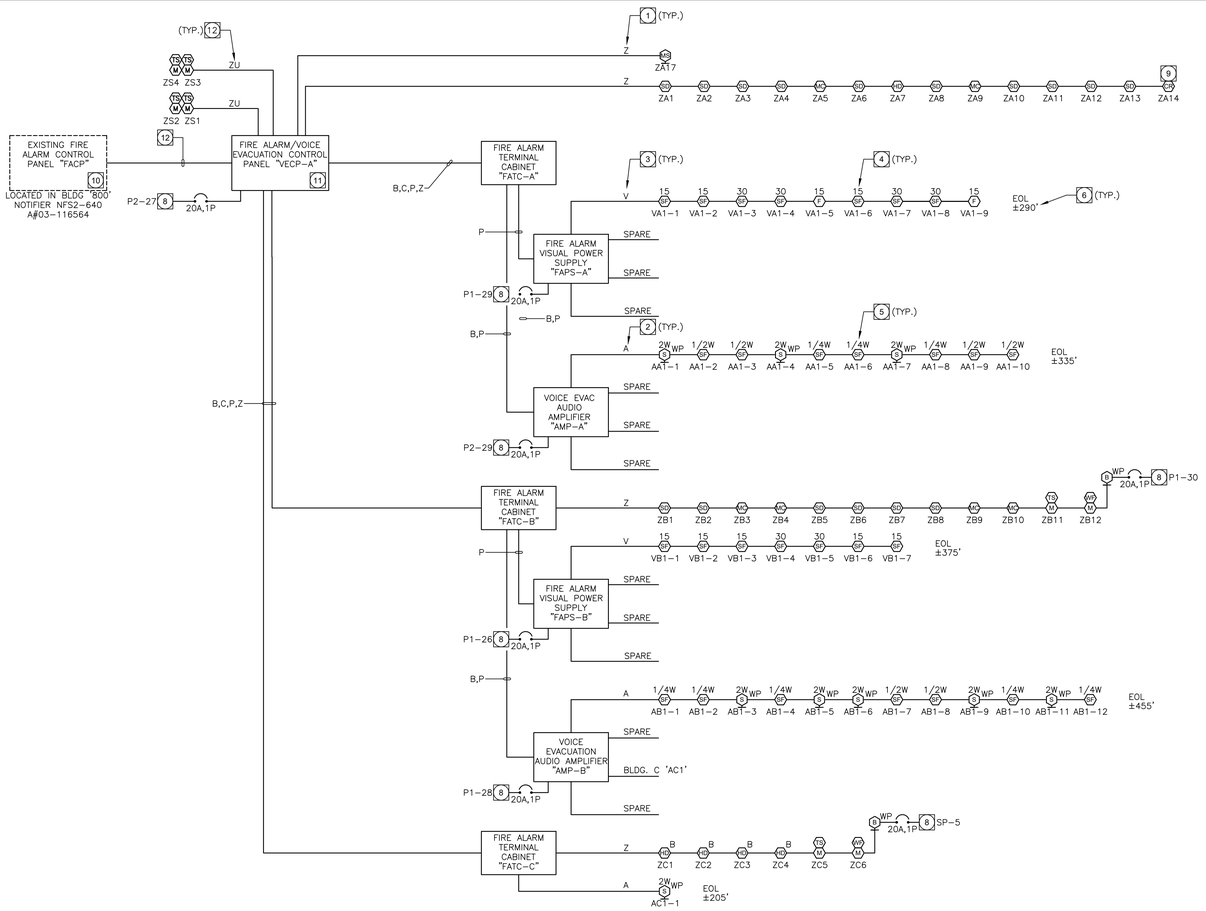

FIRE ALARM RISER DIAGRAM

SCALE: N.T.S.

1

RISER DIAGRAM SPECIFIC NOTES:

1. 'Z' INDICATES ZONABLE/ADDRESSABLE CIRCUIT, PROVIDE 2#16 TWISTED PAIR PER CIRCUIT, TYPICAL. SEE WIRE LEGEND FOR ADDITIONAL INFORMATION.
2. A – AUDIBLE NOTIFICATION CIRCUIT, PROVIDE 2#14 PER CIRCUIT, TYPICAL. SEE WIRE LEGEND FOR ADDITIONAL INFORMATION.
3. V – VISUAL NOTIFICATION CIRCUIT, PROVIDE 2#12 PER CIRCUIT, TYPICAL. SEE WIRE LEGEND FOR ADDITIONAL INFORMATION.
4. CANDELA RATING OF STROBE DEVICE, TYPICAL.
5. TAPPED WATTAGE FOR SPEAKER, TYPICAL.
6. DISTANCE TO END OF LINE (EOL) DEVICE, TYPICAL.
7. PROVIDE 2"C. WITH CABLING PER MANUFACTURERS REQUIREMENTS.
8. PROVIDE 3/4"C. WITH 2#12, 1#12 GRD. TO 120V DEDICATED CIRCUIT FOR POWER. PROVIDE 20AMP, 1–POLE CIRCUIT BREAKER WITH APPROVED LOCK–ON DEVICE, RED INDICATOR AND IDENTIFIED AS "FIRE ALARM CONTROL CIRCUIT" (NFPA 72, 10.5.5.2). CONNECT AS REQUIRED. PROVIDE ALL REQUIRED MOUNTING HARDWARE. MATCH A.I.C. RATING OF DEVICES USED.
9. CONTRACTOR TO PROVIDE RELAY MODULE FOR AUTONOMOUS SOUND SYSTEM. RELAY TO TURN "OFF" AUTONOMOUS SOUND SYSTEM DURING AN ALARM. CONTRACTOR TO VERIFY EXACT LOCATION OF SYSTEM ON SITE. A QUALIFIED PUBLIC ADDRESS CONTRACTOR IS TO BE UTILIZED TO INTERFACE FIRE ALARM SYSTEM WITH SOUND SYSTEM.
10. MODIFY EXISTING FIRE ALARM CONTROL PANEL/EQUIPMENT AS REQUIRED TO SERVE THE NEW CONSTRUCTION. PROVIDE NETWORK MODULE AND ADDITIONAL HARDWARE, CABLING, CONNECTIONS, PROGRAMMING, ETC. AS REQUIRED FOR A COMPLETE AND OPERABLE SYSTEM.
11. PROVIDE NETWORK MODULE AND PROGRAMMING AS REQUIRED FOR CONNECTION TO EXISTING CAMPUS FIRE ALARM SYSTEM.
12. PROVIDE 6–STRAND 50 MICRON OM4 CABLING TO INTERCONNECT NEW FIRE ALARM CONTROL PANEL TO EXISTING FIRE ALARM CONTROL PANEL ON CAMPUS FOR SYSTEM INTERFACE. PROVIDE ALL NECESSARY RELAYS, MODULES, CABINETS, ETC. FOR A COMPLETE AND OPERABLE SYSTEM. PER CFC 907.17, NFPA 10.4.1.2–10.4.1.2.2: "RE–ACCEPTANCE TESTING TO BE PERFORMED ON EXISTING PANEL TO VERIFY COMPLIANCE AND OPERATION.

FIRE ALARM GENERAL NOTES:

1. NOTIFICATION DEVICES IN ROOMS CONTAINING (2) OR MORE AUDIBLE AND/OR (2) OR MORE VISUAL DEVICES SHALL BE SYNCHRONIZED PER NFPA 72. THIS SHALL INCLUDE AUDIBLE AND VISUAL DEVICES LOCATED IN ADJACENT/ADJOINING SPACES.
2. DO NOT DEVIATE FROM CONDUIT RUNS AS SHOWN ON FLOOR PLANS WITHOUT PRIOR APPROVAL FROM SYSTEM SUPPLIER / ENGINEER. FACTORS SUCH AS EXCESSIVE VOLTAGE DROP, ADDITIONAL PARTS, ENGINEERING, ETC. THAT ARE A RESULT OF CONDUIT RUN DEVIATIONS SHALL BE THE SOLE RESPONSIBILITY OF THE CONTRACTOR.
3. DETECTORS SHALL NOT BE LOCATED IN A DIRECT AIR–FLOW, NOR CLOSER THAN 3 FEET (915 mm) FROM ANY AIR SUPPLY DIFFUSER.
4. THE AUDIBLE ALARM NOTIFICATION APPLIANCES SHALL PROVIDE A SOUND PRESSURE LEVEL OF 15 dBA ABOVE THE AVERAGE AMBIENT SOUND LEVEL OR 5 dBA ABOVE THE MAXIMUM SOUND LEVEL HAVING DURATION OF AT LEAST 60 SECONDS, WHICHEVER IS GREATER, IN EVERY OCCUPIED SPACE WITHIN THE BUILDING PER CFC SECTION 907.5.2.1.1. THE MINIMUM SOUND PRESSURE LEVEL SHALL BE 60 dBA PER NFPA 72, TABLE A.18.4.3.
5. THE AUDIBLE ALARM SIGNAL SHALL BE THE STANDARD FIRE ALARM EVACUATION SIGNAL, ANSI S34.1 AUDIBLE EMERGENCY EVACUATION SIGNAL, "THREE PULSE TEMPORAL PATTERN", AS DESCRIBED IN NFPA 72. EXCEPTION: THE USE OF THE EXISTING EVACUATION SIGNALING SCHEME SHALL BE PERMITTED WHERE APPROVED BY THE ENFORCING AGENT. (CFC, SECTION 907.5.2.1.3)
6. THE EXISTING CAMPUS FIRE ALARM SYSTEM SHALL BE MAINTAINED AND OPERATIONAL AT ALL TIMES DURING ALTERATIONS AND CONSTRUCTION. WHEN PORTIONS OF THE SYSTEM REQUIRE ALTERATIONS, THE REMAINDER OF THE SYSTEM SHALL BE KEPT IN SERVICE. IF NECESSARY TO SHUT DOWN ENTIRE FIRE ALARM SYSTEM, CONTRACTOR SHALL PROVIDE FIREWATCH FOR ALL OCCUPIED AREAS OF WORK UNTIL THE FIRE ALARM SYSTEM IS RETURNED TO OPERATIONAL SERVICE. FIREWATCH AND SYSTEM/EQUIPMENT IDENTIFICATION SHALL BE PER THE 2019 CFC, CHAPTER 33. LOCAL FIRE AUTHORITY AND OWNER SHALL BE NOTIFIED 48 HOURS IN ADVANCE OF ANY SHUT DOWN.
7. EMERGENCY VOICE/ALARM COMMUNICATION SYSTEMS SHALL BE DESIGNED AND INSTALLED IN ACCORDANCE WITH NFPA 72. THE OPERATION OF ANY AUTOMATIC FIRE DETECTOR, SPRINKLER WATERFLOW DEVICE OR MANUAL FIRE ALARM BOX SHALL AUTOMATICALLY SOUND AN ALERT TONE FOLLOWED BY VOICE INSTRUCTIONS GIVING APPROVED INFORMATION AND DIRECTIONS FOR A GENERAL OR STAGED EVACUATION IN ACCORDANCE WITH THE FIRE SAFETY EVACUATION PLANS REQUIRED BY SECTION 404 PER CBC/CFC, SECTION 907.5.2.2.
8. EMERGENCY VOICE/ALARM COMMUNICATION SYSTEMS SHALL HAVE THE CAPABILITY TO BROADCAST LIVE VOICE MESSAGES BY PAGING ZONES ON A SELECTIVE AND ALL–CALL BASIS PER CBC/CFC, SECTION 907.5.2.2.2.
9. EMERGENCY VOICE/ALARM COMMUNICATION SYSTEMS SHALL BE PROVIDED WITH AN APPROVED EMERGENCY POWER SOURCE PER CBC/CFC, SECTION 907.5.2.2.5.

BATTERY SIZING CALCULATION

PROJECT NAME: HIGHLANDS HS AQUATICS FACILITY
PANEL LOCATION: BUILDING A
DATE PERFORMED: March 31, 2023

VECP-A

QTY.	DEVICE NAME	STD-BY (AMPS)		ALARM (AMPS)	
1	CONTROL PANEL	0.3400	0.3400	0.3400	0.3400
1	VOICE COMMAND	0.3000	0.3000	0.3000	0.3000
1	MICROPHONE MODULE	0.0200	0.0200	0.0660	0.0660
1	NETWORK DISPLAY	0.4000	0.4000	0.4000	0.4000
1	NETWORK MODULE	0.4000	0.4000	0.4000	0.4000
1	PULL STATION	0.0004	0.0004	0.0050	0.0050
16	SMOKE DETECTOR/BASE	0.0002	0.0032	0.0002	0.0032
6	MULTI-CRITERIA DET/BASE	0.0002	0.0012	0.0002	0.0012
5	HEAT DET (HI-TEMP)/BASE	0.0002	0.0010	0.0002	0.0010
1	CONTROL RELAY MODULE	0.0003	0.0003	0.0003	0.0003
0	MONITOR MODULE	0.0004	0.0000	0.0004	0.0000
8	SPRINKLER MONITORING	0.0004	0.0032	0.0004	0.0032
1	COMMUNICATOR	0.0520	0.0520	0.0870	0.0870
		0.0000	0.0000	0.0000	0.0000
		0.0000	0.0000	0.0000	0.0000
	TOTALS =		1.5213		1.6069

STAND-BY LOAD = 1.5213 ALARM LOAD = 1.6069 AMPS
STAND-BY TIME = 24 ALARM TIME = 15 / 60 HRS
STAND-BY = 36.5112 ALARM = 0.4017 AMP HRS
TOTAL = STAND-BY + ALARM
= 36.51 + 0.40
= 36.91 Ah (AMP HRS)
MULTIPLY BY DERATING FACTOR OF 1.25 = 46.14 Ah (AMP HRS)
MINIMUM BATTERY SIZE = 46.14 AMPERE HOURS
PROVIDE MIN. (2) 55.00 Ah 12VDC BATTERIES AS REQUIRED FOR 24VDC OPERATION

BATTERY SIZING CALCULATION

PROJECT NAME: HIGHLANDS HS AQUATICS FACILITY
PANEL LOCATION: BUILDING A
DATE PERFORMED: March 31, 2023

FAPS-A

QTY.	DEVICE NAME	STD-BY (AMPS)		ALARM (AMPS)	
1	POWER SUPPLY	0.0910	0.0910	0.1450	0.1450
5	15cd STROBE (CEILING)	0.0000	0.0000	0.0410	0.2050
4	30cd STROBE (CEILING)	0.0000	0.0000	0.0630	0.2520
0	75cd STROBE (CEILING)	0.0000	0.0000	0.1100	0.0000
0	95cd STROBE (CEILING)	0.0000	0.0000	0.1340	0.0000
1	SYNC MODULE	0.0000	0.0000	0.0120	0.0120
		0.0000	0.0000	0.0000	0.0000
		0.0000	0.0000	0.0000	0.0000
		0.0000	0.0000	0.0000	0.0000
	TOTALS =		0.0910		0.6140

STAND-BY LOAD = 0.0910 ALARM LOAD = 0.6140 AMPS
STAND-BY TIME = 24 ALARM TIME = 15 / 60 HRS
STAND-BY = 2.1840 ALARM = 0.1535 AMP HRS
TOTAL = STAND-BY + ALARM
= 2.18 + 0.15
= 2.34 Ah (AMP HRS)
MULTIPLY BY DERATING FACTOR OF 1.25 = 2.92 Ah (AMP HRS)
MINIMUM BATTERY SIZE = 2.92 AMPERE HOURS
PROVIDE MIN. (2) 7.00 Ah 12VDC BATTERIES AS REQUIRED FOR 24VDC OPERATION

BATTERY SIZING CALCULATION

PROJECT NAME: HIGHLANDS HS AQUATICS FACILITY
PANEL LOCATION: BUILDING A
DATE PERFORMED: March 31, 2023

AMP-A

QTY.	DEVICE NAME	STD-BY (AMPS)		ALARM (AMPS)	
1	AUDIO AMPLIFIER	0.4000	0.4000	0.5500	0.5500
4	SPEAKER (1/4W)	0.0000	0.0000	0.0035	0.0140
4	SPEAKER (1/2W)	0.0000	0.0000	0.0071	0.0284
0	SPEAKER (1W)	0.0000	0.0000	0.0143	0.0000
3	WP SPEAKER (2W)	0.0000	0.0000	0.0283	0.0849
1	SYNC MODULE	0.0000	0.0000	0.0120	0.0120
		0.0000	0.0000	0.0000	0.0000
		0.0000	0.0000	0.0000	0.0000
		0.0000	0.0000	0.0000	0.0000
	TOTALS =		0.4000		0.6893

STAND-BY LOAD = 0.4000 ALARM LOAD = 0.6893 AMPS
STAND-BY TIME = 24 ALARM TIME = 15 / 60 HRS
STAND-BY = 9.6000 ALARM = 0.1723 AMP HRS
TOTAL = STAND-BY + ALARM
= 9.60 + 0.17
= 9.77 Ah (AMP HRS)
MULTIPLY BY DERATING FACTOR OF 1.25 = 12.22 Ah (AMP HRS)
MINIMUM BATTERY SIZE = 12.22 AMPERE HOURS
PROVIDE MIN. (2) 18.00 Ah 12VDC BATTERIES AS REQUIRED FOR 24VDC OPERATION

BATTERY SIZING CALCULATION

PROJECT NAME: HIGHLANDS HS AQUATICS FACILITY
PANEL LOCATION: BUILDING B
DATE PERFORMED: March 31, 2023

FAPS-B

QTY.	DEVICE NAME	STD-BY (AMPS)		ALARM (AMPS)	
1	POWER SUPPLY	0.0910	0.0910	0.1450	0.1450
5	15cd STROBE (CEILING)	0.0000	0.0000	0.0410	0.2050
2	30cd STROBE (CEILING)	0.0000	0.0000	0.0630	0.1260
0	75cd STROBE (CEILING)	0.0000	0.0000	0.1100	0.0000
0	95cd STROBE (CEILING)	0.0000	0.0000	0.1340	0.0000
1	SYNC MODULE	0.0000	0.0000	0.0120	0.0120
		0.0000	0.0000	0.0000	0.0000
		0.0000	0.0000	0.0000	0.0000
		0.0000	0.0000	0.0000	0.0000
	TOTALS =		0.0910		0.4880

STAND-BY LOAD = 0.0910 ALARM LOAD = 0.4880 AMPS
STAND-BY TIME = 24 ALARM TIME = 15 / 60 HRS
STAND-BY = 2.1840 ALARM = 0.1220 AMP HRS
TOTAL = STAND-BY + ALARM
= 2.18 + 0.12
= 2.31 Ah (AMP HRS)
MULTIPLY BY DERATING FACTOR OF 1.25 = 2.88 Ah (AMP HRS)
MINIMUM BATTERY SIZE = 2.88 AMPERE HOURS
PROVIDE MIN. (2) 7.00 Ah 12VDC BATTERIES AS REQUIRED FOR 24VDC OPERATION

BATTERY SIZING CALCULATION

PROJECT NAME: HIGHLANDS HS AQUATICS FACILITY
PANEL LOCATION: BUILDING B
DATE PERFORMED: March 31, 2023

AMP

QTY.	DEVICE NAME	STD-BY (AMPS)		ALARM (AMPS)	
1	AUDIO AMPLIFIER	0.4000	0.4000	0.5500	0.5500
5	SPEAKER (1/4W)	0.0000	0.0000	0.0035	0.0175
2	SPEAKER (1/2W)	0.0000	0.0000	0.0071	0.0142
0	SPEAKER (1W)	0.0000	0.0000	0.0143	0.0000
6	WP SPEAKER (2W)	0.0000	0.0000	0.0283	0.1698
2	SYNC MODULE	0.0000	0.0000	0.0120	0.0240
		0.0000	0.0000	0.0000	0.0000
		0.0000	0.0000	0.0000	0.0000
		0.0000	0.0000	0.0000	0.0000
	TOTALS =		0.4000		0.7755

STAND-BY LOAD = 0.4000 ALARM LOAD = 0.7755 AMPS
STAND-BY TIME = 24 ALARM TIME = 15 / 60 HRS
STAND-BY = 9.6000 ALARM = 0.1939 AMP HRS
TOTAL = STAND-BY + ALARM
= 9.60 + 0.19
= 9.79 Ah (AMP HRS)
MULTIPLY BY DERATING FACTOR OF 1.25 = 12.24 Ah (AMP HRS)
MINIMUM BATTERY SIZE = 12.24 AMPERE HOURS
PROVIDE MIN. (2) 18.00 Ah 12VDC BATTERIES AS REQUIRED FOR 24VDC OPERATION

BATTERY CALCULATIONS GENERAL NOTE:

1. CONTRACTOR TO PROVIDE BATTERY MANUFACTURER DATE STAMP PER NFPA 72. TYPICAL FOR ALL CONTROL PANELS, POWER SUPPLY PANELS AND AUDIO AMPLIFIER PANELS.

VOLTAGE DROP CALCULATIONS
HIGHLANDS HS AQUATICS FACILITY

DEVICE	UL MAX. CURRENT		VISUAL CIRCUIT		VISUAL CIRCUIT		VISUAL CIRCUIT		VISUAL CIRCUIT		VISUAL CIRCUIT		VISUAL CIRCUIT		VISUAL CIRCUIT	
	AMPS	NO	VA1	NO	SPARE	NO	SPARE	NO	SPARE	NO	VB1	NO	SPARE	NO	SPARE	NO	SPARE
STROBE (CEILING) 15 CD	0.041	5	0.205		0.000		0.000		0.000	5	0.205		0.000		0.000		0.000
STROBE (CEILING) 30 CD	0.063	4	0.252		0.000		0.000		0.000	2	0.126		0.000		0.000		0.000
STROBE (CEILING) 75 CD	0.111		0.000		0.000		0.000		0.000		0.000		0.000		0.000		0.000
STROBE (CEILING) 95 CD	0.134		0.000		0.000		0.000		0.000		0.000		0.000		0.000		0.000
			0.000		0.000		0.000		0.000		0.000		0.000		0.000		0.000
			0.000		0.000		0.000		0.000		0.000		0.000		0.000		0.000
TOTAL CURRENT ON CIRCUIT			0.457 AMPS		0.000 AMPS		0.000 AMPS		0.000 AMPS		0.331 AMPS		0.000 AMPS		0.000 AMPS		0.000 AMPS
TOTAL WIRE LENGTH IN FEET			290								375						
% VOLTAGE DROP			**2.15**		**0.00**		**0.00**		**0.00**		**2.01**		**0.00**		**0.00**		**0.00**
WIRE SIZE			#12		#12		#12		#12		#12		#12		#12		#12
CIRCUIT LOCATION			VECP-A		VECP-A		VECP-A		VECP-A		FAPS-B		FAPS-B		FAPS-B		FAPS-B
VOLTS DROPPED			**0.44**		**0.00**		**0.00**		**0.00**		**0.41**		**0.00**		**0.00**		**0.00**

FIRE ALARM SYSTEM CALCULATIONS

SCALE: N.T.S.

2

VOLTAGE DROP CALCULATIONS
HIGHLANDS HS AQUATICS FACILITY

DEVICE	UL MAX. CURRENT		AUDIBLE CIRCUIT		AUDIBLE CIRCUIT		AUDIBLE CIRCUIT		AUDIBLE CIRCUIT		AUDIBLE CIRCUIT		AUDIBLE CIRCUIT		AUDIBLE CIRCUIT	
	AMPS	NO	AA1	NO	SPARE	NO	SPARE	NO	SPARE	NO	AB1	NO	SPARE	NO	AC1	NO	SPARE
SPEAKER 1/4W	0.004	3	0.011		0.000		0.000		0.000	5	0.018		0.000		0.000		0.000
SPEAKER 1/2W	0.007	4	0.028		0.000		0.000		0.000	2	0.014		0.000		0.000		0.000
SPEAKER 1W	0.014		0.000		0.000		0.000		0.000		0.000		0.000		0.000		0.000
SPEAKER 2W (WEATHERPROOF)	0.028	3	0.085		0.000		0.000		0.000	5	0.141		0.000	1	0.028		0.000
TOTAL CURRENT ON CIRCUIT			0.085 AMPS		0.000 AMPS		0.000 AMPS		0.000 AMPS		0.141 AMPS		0.000 AMPS		0.028 AMPS		0.000 AMPS
TOTAL WIRE LENGTH IN FEET			220								455				205		
% VOLTAGE DROP			**0.77**		**0.00**		**0.00**		**0.00**		**2.64**		**0.00**		**0.24**		**0.00**
WIRE SIZE			#16		#16		#16		#16		#16		#16		#16		#16
CIRCUIT LOCATION			AMP-A		AMP-A		AMP-A		AMP-A		AMP-B		AMP-B		AMP-B		AMP-B
VOLTS DROPPED			**0.16**		**0.00**		**0.00**		**0.00**		**0.64**		**0.00**		**0.06**		**0.00**

VOLTAGE DROP CALCULATIONS GENERAL NOTES:

1. THE LISTED MANUFACTURER OPERATING VOLTAGE RANGE FOR EQUIPMENT AND DEVICES ARE AS FOLLOWS:

   DEVICES = 16 – 33 VDC
   EQUIPMENT = +24VDC FILTERED, REGULATED
   BATTERY = 20.4 VDC END OF USEFUL LIFE PER NFPA 72 HANDBOOK AND UL 864.

2. VOLTAGE DROP PERCENT FORMULA:

$$\frac{\text{WIRE LENGTH} \times \text{TOTAL CURRENT AMPS} \times 21.6}{\text{CIRCULAR MILS}} \times \frac{100}{20.4}$$

   21.6 = CONSTANT (RESISTANCE OF CONDUCTOR)

   CIRCULAR MILS:
   #12AWG = 6530 #16AWG = 2580
   #14AWG = 4110 #18AWG = 1620

IDENTIFICATION STAMP
DIV. OF THE STATE ARCHITECT
APP: 03-122664 INC:
REVIEWED FOR
SS ☑ FLS ☑ ACS ☑
DATE: 05/12/2023

pjhm architects
LICENSED ARCHITECT RICHARD W. RISBECK No. C15585 REN. 02/25 STATE OF CALIFORNIA
tk|sc COLLABORATIVE
11870 Pierce Street, Suite 160
Riverside, California 92505
951.299.4160 www.tk1sc.com
Project Leader - Nikolas Bruno
Electrical Lead - Nikolas Bruno
tk1sc Job #: B2202744.000
REGISTERED PROFESSIONAL ENGINEER RICHARD W. SIMPSON No. E15610 EXP. 12/31/2024 ELECTRICAL STATE OF CALIFORNIA
pjhm architects OC Office: 24461 Ridge Route Drive #100, Laguna Hills, CA 92653 Phone: 760.730.5527 LA Office: 837 Traction Avenue, #410, Los Angeles, CA 90013 Phone: 213.278.0172 Web: pjhm.com

HIGHLAND HIGH SCHOOL
50M POOL & AQUATICS CENTER
KERN HIGH SCHOOL DISTRICT
SD Office: 804 Pier View Way #103, Oceanside, CA 92054 Phone: 949.496.6163

FIRE ALARM RISER DIAGRAM AND CALCULATIONS

EFA–2.0

8/2/2022 11:34:37 AM

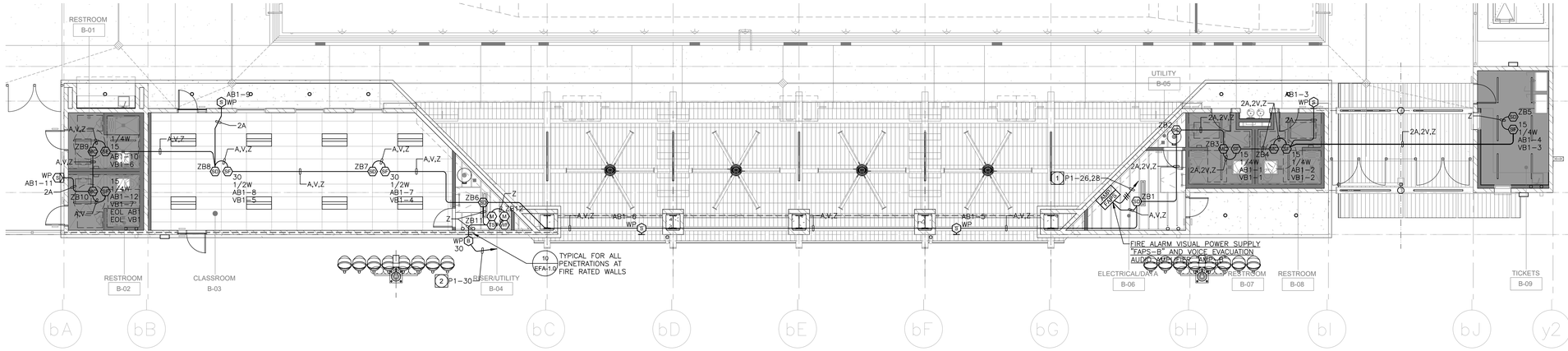

POOL BUILDING B - FIRE ALARM PLAN

1/8" = 1'-0"

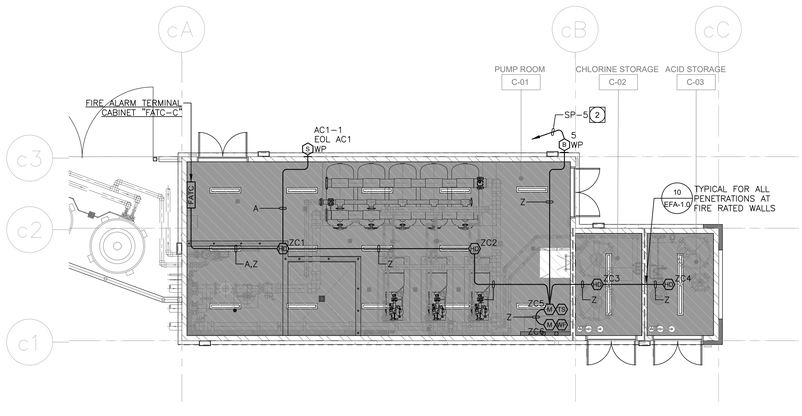

POOL BUILDING C - FIRE ALARM PLAN

1/8" = 1'-0"

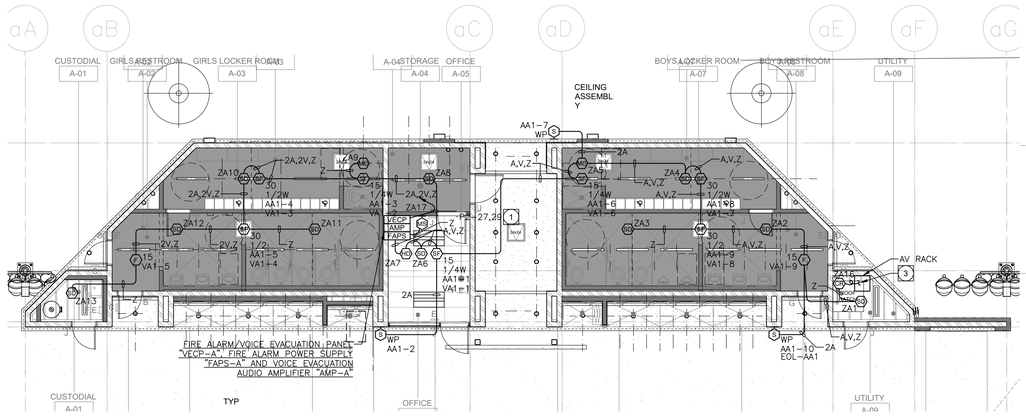

POOL BUILDING A - FIRE ALARM PLAN

1/8" = 1'-0"

VOICE EVACUATION SPEAKER NOTE:
- ALL INTERIOR SPEAKERS SHALL BE TAPPED AT 1 WATT, U.O.N.
- ALL EXTERIOR SPEAKERS SHALL BE TAPPED AT 2 WATTS, U.O.N.

FIRE ALARM PLAN GENERAL NOTES:

1. NOTIFICATION DEVICES IN ROOMS CONTAINING (2) OR MORE AUDIBLE AND/OR (2) OR MORE VISUAL DEVICES SHALL BE SYNCHRONIZED PER NFPA 72. THIS SHALL INCLUDE AUDIBLE AND VISUAL DEVICES LOCATED IN ADJACENT/ADJOINING SPACES.
2. DO NOT DEVIATE FROM CONDUIT RUNS AS SHOWN ON FLOOR PLANS WITHOUT PRIOR APPROVAL FROM SYSTEM SUPPLIER / ENGINEER. FACTORS SUCH AS EXCESSIVE VOLTAGE DROP, ADDITIONAL PARTS, ENGINEERING, ETC. THAT ARE A RESULT OF CONDUIT RUN DEVIATIONS SHALL BE THE SOLE RESPONSIBILITY OF THE CONTRACTOR.
3. DETECTORS SHALL NOT BE LOCATED IN A DIRECT AIR-FLOW, NOR CLOSER THAN 3 FEET (915 mm) FROM ANY AIR SUPPLY DIFFUSER.
4. THE AUDIBLE ALARM NOTIFICATION APPLIANCES SHALL PROVIDE A SOUND PRESSURE LEVEL OF 15 dBA ABOVE THE AVERAGE AMBIENT SOUND LEVEL OR 5 dBA ABOVE THE MAXIMUM SOUND LEVEL HAVING DURATION OF AT LEAST 60 SECONDS, WHICHEVER IS GREATER, IN EVERY OCCUPIED SPACE WITHIN THE BUILDING PER CFC SECTION 907.5.2.1.1. THE MINIMUM SOUND PRESSURE LEVEL SHALL BE 60 dBA PER NFPA 72, TABLE A.18.4.3.
5. THE VOICE/ALARM COMMUNICATION SYSTEM VOICE MESSAGE SHALL COMPLY WITH NFPA 72, SECTIONS 18.4 AND 24.4 FOR GENERAL REQUIREMENTS, INTELLIGIBILITY, AUDIBILITY, MESSAGE PRIORITY, TONES, ETC.
6. REFER TO ARCHITECTURAL EXTERIOR ELEVATIONS FOR PRECISE DEVICE LOCATIONS.
7. REFER TO ARCHITECTURAL REFLECTED CEILING PLAN FOR EXACT LOCATION OF ALL CEILING MOUNTED DEVICES.
8. IF SHIELDED WIRE IS USED, THE FOLLOWING MUST BE OBSERVED.
   A. METALLIC CONTINUITY OF THE SHIELD MUST BE MAINTAINED AND INSULATED THROUGHOUT THE ENTIRE LENGTH OF THE CABLE.
   B. THE ENTIRE LENGTH OF THE CABLE MUST HAVE A RESISTANCE GREATER THAN 1 MEGOHM TO EARTH.
9. ALL PENETRATIONS THROUGH FIRE RATED WALLS SHALL BE PROTECTED FROM THE SPREAD OF FIRE WITH AN APPROVED FIRE STOP SYSTEM EQUAL TO OR GREATER THAN THE FIRE RATING OF THE STRUCTURE / SURFACE BEING PENETRATED AS IDENTIFIED IN CBC CHAPTER 7, UL OR OTHER LAB TESTING CRITERIA. APPROVED TYPES OF MATERIALS SHALL BE IDENTIFIED WITHIN THE FIRE ALARM SECTION OF THE PROJECT SPECIFICATIONS.
10. A SYSTEM GROUND MUST BE PROVIDED FOR EARTH DETECTION AND LIGHTNING PROTECTION DEVICES. THIS CONNECTION SHALL BE MADE TO AN APPROVED DEDICATED EARTH CONNECTION PER CEC, ARTICLE 250.
11. WIRING IN DUCTS, PLENUMS AND OTHER AIR HANDLING SPACES MUST BE INSTALLED IN ACCORDANCE WITH CEC.
12. UNDERGROUND WIRING MUST BE FREE OF ALL WATER.
13. ALL FIRE ALARM SYSTEM CONDUCTORS SHALL BE RUN IN A DEDICATED FIRE ALARM CONDUIT SYSTEM.
14. WHERE A DETECTOR IS INDICATED TO BE INSTALLED ABOVE THE CEILING AND NO ACCESS TO THE CEILING SPACE EXISTS, THE ELECTRICAL CONTRACTOR SHALL FURNISH ACCESS PANELS. THE DETECTOR SHALL BE EASILY ACCESSIBLE AND THE LOCATION OF THE DETECTOR SHALL BE CLEARLY MARKED.
15. COORDINATE ALL FIRE ALARM DEVICES, ESPECIALLY REMOTE LED'S FOR DUCT SMOKE DETECTORS, WITH ARCHITECT PRIOR TO ROUGH-IN.
16. WIRING OTHER THAN THAT CONNECTED TO ELEVATOR CABS MUST NOT BE RUN IN ELEVATOR SHAFTS (REF. CEC, ARTICLE 620).
17. FIRE ALARM SYSTEM UTILIZES A COMPLETE COVERAGE, FULLY AUTOMATIC SYSTEM. PROVIDE RELAY MODULE(S) AT FATC/FACP LOCATIONS FOR CONTROL OF HVAC SHUT DOWN, SMOKE/FIRE DAMPER CLOSURE AND DOOR HOLD RELEASES.
18. WHERE NEW DEVICES (AND ASSOCIATED CONDUIT) CANNOT PHYSICALLY BE MOUNTED CONCEALED IN WALLS, RUN IN PANDUIT SURFACE RACEWAY/WIREWAY (AND DEVICES SHALL BE MOUNTED ON SURFACE OUTLET BOXES). REFER TO SPECIFICATIONS. PROVIDE SIZE OF RACEWAY TO ACCOMMODATE THE REQUIRED CONDUCTORS. WHERE CONDUIT IS INDICATED, PROVIDE SURFACE RACEWAY WITH AN EQUAL CROSS SECTION TO THE DIAMETER OF THE CONDUIT INDICATED.
19. DETECTOR SENSITIVITY SHALL BE TESTED USING MANUFACTURER'S CALIBRATED SENSITIVITY INSTRUMENT OR OTHER CALIBRATED TESTING METHOD. (CFC, SECTIONS 907.8.3 AND 907.8.4)
20. THE VOICE/ALARM COMMUNICATION SYSTEM VOICE MESSAGE SHALL COMPLY WITH NFPA 72 SECTIONS 18.4 AND 24.4 FOR GENERAL REQUIREMENTS, INTELLIGIBILITY, AUDIBILITY, MESSAGE PRIORITY, TONES, ETC. REFER TO NFPA 72 ANNEX D, D.1 THROUGH D.6 FOR DETERMINING THE FUNDAMENTALS OF TEST PROTOCOL AND METHOD OF MEASURING INTELLIGIBILITY.
21. THE EXISTING CAMPUS FIRE ALARM SYSTEM SHALL BE MAINTAINED AND OPERATIONAL AT ALL TIMES DURING ALTERATIONS AND CONSTRUCTION. WHEN PORTIONS OF THE SYSTEM REQUIRE ALTERATIONS, THE REMAINDER OF THE SYSTEM SHALL BE KEPT IN SERVICE. IF NECESSARY TO SHUT DOWN ENTIRE FIRE ALARM SYSTEM, CONTRACTOR SHALL PROVIDE FIREWATCH FOR ALL OCCUPIED AREAS OF WORK UNTIL THE FIRE ALARM SYSTEM IS RETURNED TO OPERATIONAL SERVICE. FIREWATCH AND SYSTEM/EQUIPMENT IDENTIFICATION SHALL BE PER THE 2019 CFC CHAPTER 33. LOCAL FIRE AUTHORITY AND OWNER SHALL BE NOTIFIED 48 HOURS IN ADVANCE OF ANY SHUT DOWN. REFER TO DSA IR F-2 FOR ADDITIONAL REQUIREMENTS.

PLAN NOTES:

1. PROVIDE 3/4"C. WITH 3#12, 1#12 GRD. TO TWO (2) 120V DEDICATED CIRCUITS FOR POWER. PROVIDE TWO (2) 20AMP, 1-POLE CIRCUIT BREAKERS WITH APPROVED LOCK-ON DEVICES. RED INDICATORS AND IDENTIFIED AS "FIRE ALARM CONTROL CIRCUIT" (NFPA 72, 10.6). CONNECT AS REQUIRED. PROVIDE ALL REQUIRED MOUNTING HARDWARE. MATCH A.I.C. RATING OF DEVICES USED.
2. PROVIDE 3/4"C. WITH 2#12, 1#12 GRD. TO 120V DEDICATED CIRCUIT FOR POWER. PROVIDE 20AMP, 1-POLE CIRCUIT BREAKER WITH APPROVED LOCK-ON DEVICE, RED INDICATOR AND IDENTIFIED AS "FIRE ALARM CONTROL CIRCUIT" (NFPA 72, 10.6). CONNECT AS REQUIRED. PROVIDE ALL REQUIRED MOUNTING HARDWARE. MATCH A.I.C. RATING OF DEVICES USED.
3. CONTRACTOR TO PROVIDE RELAY MODULE AT AUTONOMOUS SOUND SYSTEM TO TURN "OFF" AUTONOMOUS SOUND SYSTEM DURING AN ALARM. CONTRACTOR TO VERIFY EXACT LOCATION OF AUTONOMOUS SOUND SYSTEM ON SITE. A QUALIFIED PUBLIC ADDRESS CONTRACTOR IS TO BE UTILIZED TO INTERFACE FIRE ALARM SYSTEM WITH SOUND SYSTEM.

WALL LEGEND

CONCRETE MASONRY UNIT WALL ASSEMBLY, 1-HOUR FIRE RATED

COMPLETE FIRE ALARM SUBMITTAL

AUTOMATIC ADDRESSABLE FIRE ALARM SYSTEM WITH EMERGENCY VOICE/ALARM COMMUNICATION SYSTEM

IDENTIFICATION STAMP
DIV. OF THE STATE ARCHITECT
APP: 03-122664 INC:
REVIEWED FOR
SS ☑ FLS ☑ ACS ☑
DATE: 05/12/2023

pjhm architects
LICENSED ARCHITECT
RICHARD W. SWARTZ
No. C15585
REN. 02/25
STATE OF CALIFORNIA
tk|sc COLLABORATIVE
11870 Pierce Street, Suite 160
Riverside, California 92505
951.299.4160 www.tk1sc.com
Project Leader - Nikolas Bruno
Electrical Lead - Nikolas Bruno
tk1sc Job #: B2202744.000
REGISTERED PROFESSIONAL ENGINEER
RICHARD W. SWARTZ
No. E15610
ELECTRICAL
STATE OF CALIFORNIA

HIGHLAND HIGH SCHOOL
50M POOL & AQUATICS CENTER
KERN HIGH SCHOOL DISTRICT

POOL BUILDING
FIRE ALARM

EFA-3.0

OC Office: 24461 Ridge Route Drive #100, Laguna Hills, CA 92653 Phone: 949.496.6161 SD Office: 804 Pier View Way #103, Oceanside, CA 92054 Phone: 760.730.5527 LA Office: 837 Traction Avenue, #410, Los Angeles, CA 90013 Phone: 213.278.0112 Web: pjhm.com

8/2/2022 11:34:37 AM

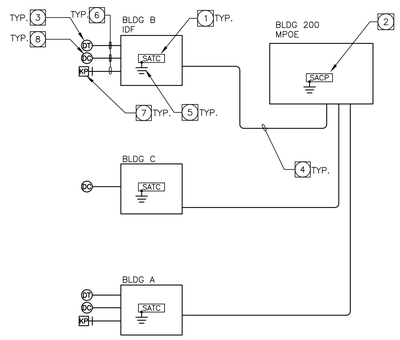

SECURITY SYSTEM SPECIFIC NOTES:

1. PROVIDE NEW DMP SECURITY ALARM TERMINAL CABINET. PROVIDE ZONE EXPANSION MODULES, BUS SPLITTER/REPEATER MODULES, TERMINAL STRIPS, TRANSFORMERS, POWER SUPPLIES, ETC. FOR A COMPLETE AND OPERABLE SYSTEM.
2. EXISTING DMP SACP TO REMAIN AND PROTECTED IN PLACE. PROVIDE ZONE EXPANSION MODULES, BUS SPLITTER/REPEATER MODULES, TERMINAL STRIPS, TRANSFORMERS, POWER SUPPLIES, ETC. FOR A COMPLETE AND OPERABLE SYSTEM.
3. PROVIDE MOTION DETECTOR PER SPECIFICATIONS. QUANTITY PER PLAN DRAWINGS.
4. PROVIDE NEW SECURITY SYSTEM BACKBONE CABLING PER MANUFACTURER'S SPECIFICATIONS.
5. PROVIDE GROUNDING AT EACH SECURITY SYSTEM TERMINAL CABINET PER SPECIFICATIONS.
6. PROVIDE NEW SECURITY SYSTEM DEVICE CABLING PER MANUFACTURER'S RECOMMENDATIONS AND SPECIFICATIONS.
7. PROVIDE NEW KEYPAD PER SPECIFICATIONS. QUANTITY PER PLAN DRAWINGS.
8. PROVIDE NEW DOOR CONTACTS PER SPECIFICATIONS. QUANTITY PER PLAN DRAWINGS.

SECURITY SYSTEM GENERAL NOTES:

1. ALL NEW CABLE TO BE COMPLETE WITH ALL TERMINATIONS AND TESTING FOR COMPLETE AND OPERABLE SYSTEM.
2. LOCATE EQUIPMENT IN LOCKABLE ENCLOSURE INSIDE EXISTING BUILDING.
3. ALL DEVICES ARE TO BE WIRED INDEPENDENTLY, NO LOOPS FOR DATA, DEVICE OR POWER.
4. LABEL ALL CABLES WITH SCHOOL'S DESIGNATED ZONE NUMBER / LOCATION ON PLASTIC COATED CABLE MARKERS WRAPPED AROUND CABLE AT EACH END AND IN EACH TERMINAL CABINET AND JUNCTION BOX. DISTRICT M&O DEPT. TO SUPPLY CONTRACTOR WITH ZONE NUMBERS.
5. PROVIDE "CADDY" HANGERS FOR ALL CABLE TO BE RUN ABOVE ACCESSIBLE CEILING. SUPPORT CABLES SEPERATE FROM CEILING SYSTEM AND OTHER SUB-SYSTEM CABLING. PROVIDE CONDUIT FOR ALL CABLES ABOVE NON-ACCESSIBLE CEILING SPACE.
6. PROVIDE "CADDY" HANGERS FOR ALL CABLE TO BE RUN ABOVE ACCESSIBLE CEILING. SUPPORT CABLES SEPERATE FROM CEILING SYSTEM AND OTHER SUB-SYSTEM CABLING. PROVIDE CONDUIT FOR ALL CABLES ABOVE NON-ACCESSIBLE CEILING SPACE.
7. SECURITY SYSTEM SHALL NOT IN ANY WAY LIMIT OR COMPROMISE EXITING THROUGH ALL REQUIRED EXIT ACCESS AND EXIT DISCHARGE SYSTEMS.
8. ANY SECURITY SYSTEM PENETRATION THROUGH RATED ASSEMBLIES SHALL BE PROPERLY PROTECTED WITH A UL LISTED FIRE-STOP INSTALLATION MATCHING THE RATING OF THE ASSEMBLY.

SECURITY ALARM SYSTEM BLOCK DIAGRAM

SCALE: N.T.S.

2

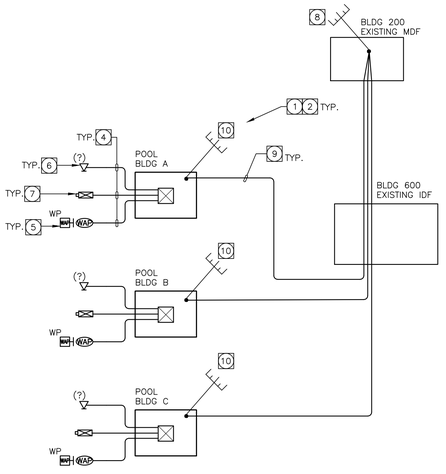

BLOCK DIAGRAM DETAIL NOTES:

1. PROVIDE IDF RACK. COMPLETE WITH ALL PATCH PANELS, CAT-6 PATCH CORDS, GROUNDING, ETC. FOR A COMPLETE AND OPERABLE SYSTEM. SEE E-SHEETS FOR EXACT LOCATIONS. SEE DISTRICT SPECIFICATIONS FOR MORE INFORMATION. TERMINATE ALL CAT-6 CABLES IN RACK-MOUNTED CAT-6 PATCH PANELS. NETWORK ELECTRONICS ARE PROVIDED/INSTALLED BY OTHERS.
2. ROUTE AND TERMINATE ALL CAT-6 DATA CABLES IN IDF RACK. LABEL ALL CABLES AND PATCH PANELS.
3. BACKBONE CABLE FROM MDF TO IDF, TYPICAL. SEE FIBER OPTIC CABLE BACKBONE BLOCK DIAGRAM DETAIL 1 THIS SHEET FOR MORE INFORMATION.
4. PROVIDE CATEGORY-6 UTP 4-PAIR DATA CABLE(S) PER SPECIFICATIONS. CABLE QUANTITIES AT EACH DEVICE PER PLAN DRAWINGS AND FACEPLATE DETAILS. TERMINATE IN FACEPLATE(S) AT DEVICE LOCATION AND ON CATEGORY-6 RACK-MOUNTED PATCH PANEL(S) IN IDF RACK/CABINETS UNLESS OTHERWISE NOTED. SEE PLAN DRAWINGS FOR LOCATIONS AND QUANTITIES.
5. PROVIDE WIRELESS ACCESS POINT CAT-6 DATA OUTLET AND CABLING. SEE FACEPLATE DETAILS FOR MORE INFORMATION. QUANTITY AND LOCATIONS PER PLAN DRAWINGS. ACCESS POINT (RUCKUS T710) IS OWNER FURNISHED CONTRACTOR INSTALLED.
6. PROVIDE CAT-6 DATA OUTLET WALL MOUNTED. NUMBER IN PARENTHESES (?) INDICATES REQUIRED QUANTITY OF CABLES AND OUTLETS. SEE FACEPLATE DETAILS FOR MORE INFORMATION. QUANTITY AND LOCATIONS PER PLAN DRAWINGS.
7. PROVIDE CAT-6 DATA OUTLET AND OWNER FURNISHED CONTRACTOR INSTALLED CCTV SECURITY CAMERA (SAMSUNG SNO-L6083R). PROVIDE 1"C. TO IDF RACK. QUANTITY AND LOCATIONS PER PLAN DRAWINGS.
8. RACK-MOUNTED FIBER ENCLOSURE IN MDF RACK. TERMINATE ALL FIBER OPTIC BACKBONE CABLES IN RACK-MOUNTED FIBER ENCLOSURE(S). PROVIDE ALL FIBER ENCLOSURES, FAN OUT KITS, SPLICE TRAYS, PANELS, ADAPTERS, CONNECTORS, FIBER PATCH CORDS, LABELING, ETC. AS REQUIRED TO TERMINATE ALL STRANDS FOR A COMPLETE SYSTEM PER DISTRICT'S SPECIFICATIONS. SEE DISTRICT SPECIFICATIONS FOR MDF RACK AND FIBER PATCH CORD REQUIREMENTS. COORDINATE FIBER ENCLOSURE LOCATIONS WITH DISTRICT PRIOR TO CABLE ROUGH-IN.
9. 12-STRAND SINGLEMODE, TIGHT BUFFERED INDOOR/OUTDOOR RATED FIBER OPTIC CABLE, UNLESS OTHERWISE NOTED IN DISTRICT SPECIFICATIONS. PROVIDE PLENUM RATED CABLING IN PLENUM RATED SPACES.
10. RACK-MOUNTED FIBER CONNECTOR HOUSING IN IDF RACK. PROVIDE ALL FIBER ENCLOSURES, FAN OUT KITS, SPLICE TRAYS, PANELS, ADAPTERS, CONNECTORS, FIBER PATCH CORDS, LABELING, ETC. AS REQUIRED TO TERMINATE ALL STRANDS FOR A COMPLETE SYSTEM PER DISTRICT'S SPECIFICATIONS. SEE DISTRICT SPECIFICATIONS FOR IDF RACK AND FIBER PATCH CORD REQUIREMENTS.

LAN/VOIP SYSTEMS BLOCK DIAGRAM

SCALE: NTS

3

HORIZONTAL CATEGORY-6 CABLING SYSTEM NOTES:

1. IT IS THE INTENT OF THE DRAWINGS AND SPECIFICATIONS, WHICH ARE PRESENTED IN A "DESIGN-BUILD" FORMAT, FOR THE CONTRACTOR TO DESIGN, PROVIDE AND INSTALL A COMPLETE, FULLY OPERATIONAL AND TESTED STRUCTURED CABLING SYSTEM, INCLUDING ALL FINAL DESIGN, MATERIAL, EQUIPMENT, LABOR, SUPPLIES, TESTING AND ACCESSORIES REQUIRED TO FURNISH AND INSTALL A COMPLETE CONNECTION TO ALL LOCATIONS AS INDICATED ON THE DRAWINGS AND SPECIFICATIONS.
2. CONTRACTOR TO PROVIDE ALL CABLES, JACKS, FACE PLATES, PATCH PANELS, WIRE MANAGERS, CABLE SUPPORTS, PATCH CORDS, RACKS, CABINETS, LADDER TRAY, GROUNDING, AND ANY ADDITIONAL HARDWARE AND COMPONENTS FOR A COMPLETE AND OPERABLE SYSTEM.
3. CONTRACTOR TO INSTALL CAT-6 UTP 4-PAIR CABLE FROM DEVICE TO PATCH PANEL IN IDF/MDF ROOMS IN THE QUANTITIES AND LOCATIONS SHOWN ON THE PLAN DRAWINGS AND SPECIFICATIONS.
4. TERMINATE ALL CAT-6 CABLES ON CATEGORY-6 PATCH PANELS(S) IN IDF RACK/CABINET(S). PROVIDE SUFFICIENT PATCH PANELS TO TERMINATE ALL CABLES.
5. CONTRACTOR TO PROVIDE AND INSTALL ALL CONDUIT SLEEVES AND FIRESTOP SYSTEMS AS NEEDED AND AS REQUIRED BY CODE AND DISTRICT STANDARDS.
6. PROVIDE ALL NECESSARY CABLE SUPPORTS, HANGER WIRE/ROD, SLEEVES, RACKS, LADDER TRAY, D-RINGS, WIRE MANAGERS, RACK AND LADDER GROUNDING, LABELS, AND ANY ADDITIONAL EQUIPMENT AND HARDWARE FOR A COMPLETE AND OPERABLE SYSTEM.
7. CONTRACTOR TO ROUTE AND SUPPORT CABLE RUNS VIA J-HOOKS LOCATED ABOVE ACCESSIBLE CEILING SPACES. J-HOOKS SHALL NOT BE SPACED FURTHER THAN 48" FROM EACH OTHER. INSTALL CABLES IN CONDUIT WHEN TRAVELING ACROSS INACCESSIBLE CEILINGS, HARD LID CEILINGS, AND OPEN CEILINGS. PAINT CONDUIT TO MATCH SURROUNDING SURFACES WHEN INSTALLED IN OPEN CEILINGS AND EXPOSED AREAS.
8. VERIFY ALL QUANTITIES AND LOCATIONS WITH PLAN DRAWINGS AND DISTRICT SPECIFICATIONS PRIOR TO ROUGH-IN.
9. PROVIDE ALL NECESSARY CAT-6 PATCH CORDS, LABELS AND ANY ADDITIONAL HARDWARE AND EQUIPMENT FOR A COMPLETE AND OPERABLE SYSTEM.
10. TEST CABLES WITH THE APPROPRIATE PERMANENT LINK TEST UTILIZING A LEVEL III CABLE ANALYZER (FLUKE DTX OR EQUAL) PRIOR TO SYSTEM ACTIVATION, OR AS DIRECTED IN DISTRICT SPECIFICATIONS.
11. PROVIDE ALL PATCH CORDS IN THE COLORS, LENGTHS AND QUANTITIES AS INDICATED IN DISTRICT SPECIFICATIONS.
12. WIRELESS ACCESS POINT ELECTRONICS OWNER PROVIDED AND INSTALLED BY THE CONTRACTOR
13. CONTRACTOR SHALL LABEL ALL PATCH PANELS, TERMINAL BLOCKS, FACEPLATES AND BOTH ENDS OF EVERY CABLE WITH MACHINE GENERATED PLASTIC LABELS. HAND WRITTEN LABELS ARE PROHIBITED. REFER TO DISTRICT SPECIFICATIONS FOR PROPER LABELING SCHEME. PROVIDE LABEL SAMPLES FOR DISTRICT REVIEW AND APPROVAL PRIOR TO INSTALLATION.
14. CONTRACTOR SHALL COORDINATE SYSTEM CUT OVER AND TESTING WITH DISTRICT'S PROJECT MANAGER.
15. PROVIDE MANUFACTURER'S EXTENDED CABLE WARRANTY ACCORDING TO DISTRICT SPECIFICATIONS.
16. CONTRACTOR SHALL EXERCISE EXTREME CAUTION TO NOT DISRUPT OTHER SYSTEMS DURING INSTALLATION.
17. REFERENCE SPECIFICATIONS FOR ADDITIONAL INFORMATION AND REQUIREMENTS.
18. DRAWINGS AND LAYOUTS ARE PRIMARILY DIAGRAMMATIC, CONTRACTOR IS RESPONSIBLE FOR FINAL FOOTAGES AND EXACT LOCATIONS.
19. DISTRICT TO CONFIGURE CAMERAS AND PROCURE APPROPRIATE LICENSES TO INTEGRATE INTO EXISTING ONSSI OCULARIS VMS.
20. PROVIDE ALL NEW FIBER OPTIC CABLING TO PROVIDE DATA CONNECTIVITY TO THE NEW IDF(S).
21. CONTRACTOR TO PROVIDE ALL FIBER PATCH PANELS, BREAKOUT KITS, PIGTAILS, PANELS, CONNECTORS, COUPLERS, ADAPTERS, SPLICE TRAYS, FIBER PATCH CORDS, GROUNDING CONNECTIONS, LABELING, AND ALL OTHER COMPONENTS NECESSARY FOR A COMPLETE AND OPERABLE SYSTEM.
22. ALL FIBER SHALL BE 9-MICRON SINGLEMODE INDOOR OUTDOOR RATED TIGHT BUFFERED CABLE, IN STRAND COUNTS AS INDICATED.
23. ALL FIBER SHALL BE INSTALLED INSIDE 1" MINIMUM DIAMETER INNERDUCT, MAXIMUM 40 PERCENT FILL RATIO, WHEN NOT INSTALLED IN METALLIC OR PVC CONDUIT. ONLY USE PLENUM RATED INNERDUCT IN PLENUM RATED SPACES.
24. ALL ACTIVE ELECTRONICS (DATA SWITCHES, GBIC MODULES, HUBS, ROUTERS, ETC) SHALL BE PROVIDED BY OTHERS.
25. PROVIDE ALL FIBER OPTIC PATCH CORDS IN QUANTITIES AND LENGTHS PER DISTRICT SPECIFICATIONS. CONTRACTOR RESPONSIBLE TO NEATLY INSTALL ALL FIBER PATCH CORDS TO THE OWNER'S SATISFACTION.
26. FIBER OPTIC CABLES SHALL NOT BE INSTALLED IN ELECTRICAL CONDUIT BODIES OR CONDULETS NOT SPECIFICALLY MANUFACTURED FOR FIBER OPTIC CABLES AND PRE-APPROVED BY ARCHITECT.
27. PROVIDE TWENTY (20) FEET OF NEATLY COILED FIBER BACKBONE SLACK LOOPS AND SECURED AT EACH MDF AND IDF LOCATION. CONFIRM MOUNTING LOCATIONS WITH DISTRICT'S ENGINEER PRIOR TO INSTALLATION.
28. CONTRACTOR SHALL COORDINATE SYSTEM CUT OVER AND TESTING WITH DISTRICT'S PROJECT MANAGER AND WITH DISTRICT'S SCHEDULE.
29. ATTACH METALLIC CABLE SHIELD(S) TO FIBER ENCLOSURE GROUND LUG ACCORDING TO MANUFACTURERS INSTRUCTIONS. INSTALL #6 AWG GREEN GROUND CONDUCTOR FROM ENCLOSURE GROUND LUG TO NEAREST TELECOM GROUND BUSBAR, EFFECTIVELY GROUNDED BUILDING STEEL, OR NEAREST ELECTRICAL PANEL GROUND POINT. INSIDE THE FIBER ENCLOSURE, INSTALL GROUND TAG ATTACHED TO GROUND CONDUCTOR INDICATING LOCATION OF THE GROUND POINT.
30. PROVIDE WEATHERPROOF PLASTIC FIBER OPTIC WARNING LABELS ON EACH CABLE IDENTIFYING LOCATION OF BOTH ENDS, STRAND COUNT AND FIBER TYPE, (E.G.: BLDG-B IDF-1 TO BLDG-A MDF, 12MM), AT EVERY VAULT, PULLBOX, HANDHOLE, AND AT TEN (10) FOOT INTERVALS WHERE CABLE IS VISIBLE AND ACCESSIBLE. HAND WRITTEN LABELS ARE PROHIBITED.
31. ALL FIBER OPTIC CABLES SHALL BE CONTINUOUS. SPLICING OF FIBER OPTIC CABLE IS PROHIBITED, UNLESS OTHERWISE NOTED IN DISTRICT STANDARDS AND SPECIFICATIONS.
32. DRAWINGS AND LAYOUTS ARE PRIMARILY DIAGRAMMATIC, CONTRACTOR IS RESPONSIBLE FOR FINAL FOOTAGES AND EXACT LOCATIONS.

GENERAL NOTES

1. IT IS THE INTENT OF THESE DRAWINGS WHICH ARE PRESENTED IN A DESIGN-BUILD FORMAT, FOR THE CONTRACTOR TO DESIGN, PROVIDE AND INSTALL A COMPLETE, FULLY OPERATIONAL AND TESTED SYSTEMS.
2. INSTALLATION OF EQUIPMENT AND WIRING MUST MEET ALL APPLICABLE CODES AND STANDARDS INCLUDING BUT NOT LIMITED TO CEC, NFPA, ANSI/EIA/TIA AND ISO 9001.
3. EQUIPMENT AND MATERIALS MUST COMPLY WITH UL LISTING AND EACH ITEM STAMPED OR LABELED AS SUCH.
4. COMPLIANCE WITH ANSI/TIA/EIA 569-C. COMMERCIAL BUILDING STANDARDS FOR TELECOMMUNICATIONS PATHWAYS AND SPACES.
5. COMPLIANCE WITH ANSI/TIA/EIA 568-D. COMMERCIAL BUILDING TELECOMMUNICATIONS CABLING STANDARDS.
6. DRAWINGS AND LAYOUTS ARE PRIMARILY DIAGRAMMATIC, CONTRACTOR IS RESPONSIBLE FOR FINAL FOOTAGES AND EXACT LOCATIONS.
7. CONTRACTOR SHALL NOTE IN WRITING, ANY DISCREPANCIES BETWEEN DRAWINGS AND SPECIFICATIONS. AS SUCH DISCREPANCIES ARISE, THE MORE STRINGENT SHALL TAKE PRECEDENCE.
8. COMMUNICATIONS CABLES (ANY TYPE) ROUTED THRU FURNITURE SYSTEMS SHALLBE ROUTED VIA DEDICATED COMMUNICATIONS PATHWAY, WHEN AVAILABLE. WHEN DEDICATED COMMUNICATIONS PATHWAY IS UNAVAILABLE, THE ABOVE-MENTIONED CABLES SHALL BE ROUTED IN A BARRIERED SYSTEMS FURNITURE RACEWAY SEPARATE FROM POWER CONDUCTORS PER EIA/TIA STANDARDS AND NEC REQUIREMENTS.
9. CONTRACTOR SHALL VERIFY SYSTEMS FURNITURE TYPE AND CABLE ROUTING/FACEPLATE LOCATION WITHIN SYSTEMS FURNITURE PRIOR TO BID. INCLUDE ALL COSTS IN BASE BID.
10. REFERENCE ALL ELECTRICAL DRAWINGS.
11. REFERENCE ALL TECHNOLOGY DRAWINGS.
12. REFERENCE ALL ARCHITECTURAL DRAWINGS.
13. REFERENCE ALL ELECTRICAL AND STRUCTURED CABLING SYSTEM SPECIFICATIONS.
14. CONTRACTOR SHALL UTILIZE CONDUIT(S)/SLEEVE(S) SEQUENTIALLY, MAXIMIZING THE CABLE FILL IN EACH BEFORE UTILIZING THE NEXT CONDUIT(S)/SLEEVE(S). MAXIMUM ALLOWABLE CONDUIT FILL SHALL BE BASED ON NEC TABLES FOR CONDUIT FILL.
15. CONTRACTOR IS RESPONSIBLE TO FIELD VERIFY ALL EXISTING CONDITIONS PRIOR TO BID. FAILURE TO DO SO WILL NOT RESULT IN ADDITIONAL PAYMENTS TO CONTRACTOR. CONTRACTOR IS RESPONSIBLE FOR FINAL FOOTAGES AND EXACT LOCATIONS.
16. CONTRACTOR IS RESPONSIBLE TO VERIFY ALL PATHWAY ROUTES, DISTANCES AND CONDITIONS PRIOR TO ORDERING AND INSTALLING MATERIALS. CONTRACTOR IS REQUIRED TO MANDREL, SWAB AND MULE TAPE MEASURE EACH CONDUIT PATHWAY PRIOR TO USE.
17. INSTALLATION, RELOCATION AND TESTING OF ALL EQUIPMENT SHALL BE INCLUDED IN BID. IT IS THE CONTRACTOR'S RESPONSIBILITY TO PROVIDE ALL NECESSARY LABOR AND MATERIALS FOR COMPLETE AND FULLY OPERATIONAL SYSTEMS AT NO ADDITIONAL COST TO THE DISTRICT.

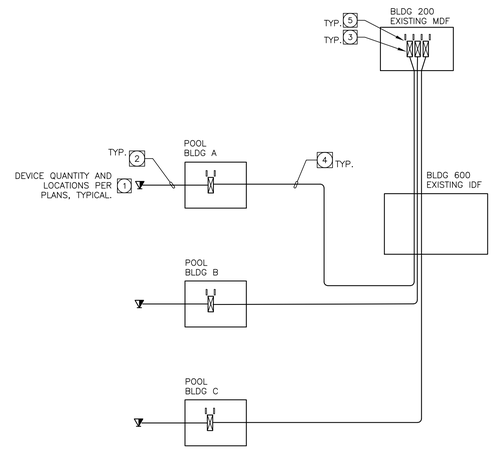

TELEPHONE SYSTEM BLOCK DIAGRAM

SCALE: N.T.S.

2

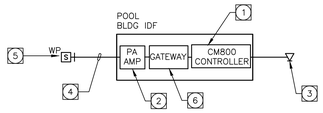

BLOCK DIAGRAM DETAIL NOTES:

1. PROVIDE FRONTROW NETWORK CONTROLLER (FRONTROW CM800). COMPLETE WITH ALL TERMINATION PUNCHBLOCKS, GROUNDING, AMPLIFIERS ETC. FOR A COMPLETE AND OPERABLE SYSTEM. SEE FLOOR PLANS FOR EXACT LOCATIONS. CONFIGURE ALL SPEAKERS INTO THE CAMPUSWIDE FRONTROW CONDUCTOR SYSTEM.
2. PROVIDE PAGING AMPLIFIER
3. PROVIDE CAT-6 DATA OUTLET FOR FRONTROW NETWORK CONTROLLER.
4. PROVIDE PAGING SPEAKER CABLING PER MANUFACTURERS REQUIREMENTS. ALL SPEAKERS TO RECEIVE INDIVIDUAL CABLES TO TERMINATION LOCATION. CABLE QUANTITIES AT EACH DEVICE PER PLAN DRAWINGS AND FACEPLATE DETAILS. SEE PLAN DRAWINGS FOR LOCATIONS AND QUANTITIES.
5. PROVIDE WEATHER PROOF PUBLIC ADDRESS SYSTEM SPEAKER. PROVIDE 1"C. TO ACCESSIBLE CEILING SPACE OR PAGING AMP WITH CONDUCTORS. SEE FACEPLATE DETAILS FOR MORE INFORMATION. QUANTITY AND LOCATIONS PER PLAN DRAWINGS.
6. PROVIDE COPPER TO IP GATEWAY.

SYSTEM BLOCK DIAGRAM KEY NOTES:

1. COMBINATION TELEPHONE/DATA DEVICE. SEE FACEPLATE DETAILS FOR MORE INFORMATION.
2. **CATEGORY-6** UTP 4-PAIR CABLE PER SPECIFICATIONS. TERMINATE AT DEVICE AND AT 66M BLOCKS.
3. PROVIDE WALL MOUNT CROSS CONNECTION 66M SPLIT BLOCKS WITH 89B STAND-OFF BRACKETS, QUANTITY AS REQUIRED FOR TERMINATION OF ALL CABLES. TERMINATE CABLES IN NUMERICAL SEQUENCE. TERMINATE UNDERGROUND BACKBONE CABLE ON LEFT SIDE OF BLOCK, AND ALL STATION CABLES OR RIGHT SIDE OF BLOCK. PROVIDE MACHINE GENERATED LABELS WITH CIRCUIT NUMBERS AND A PLASTIC COVER FOR EACH 66M BLOCK. PROVIDE WALL MOUNTED D-RINGS AND JUMPER WIRE TO CROSS CONNECT INCOMING DIAL TONE TO THE STATION CABLES.
4. **25-PAIR CATEGORY-5E** OSP-RATED COPPER BACKBONE CABLE. TERMINATE ALL PAIRS AT BOTH ENDS. BOND CABLE SHIELD TO TELECOM BUSBAR IN IDF/MDF ROOM. SEE SPECIFICATIONS FOR ADDITIONAL INFORMATION. INSTALL IN UNDERGROUND CONDUIT. LABEL ALL CABLES WITH LOCATION OF BOTH ENDS.
5. WALL MOUNTED METAL D-RINGS ON EACH SIDE OF EVERY 66M PUNCH BLOCK FOR ROUTING OF JUMPER WIRES.

ANALOG TELEPHONE SYSTEM GENERAL NOTES:

1. CONTRACTOR'S WORK INCLUDES ALL MATERIAL, LABOR, EQUIPMENT, SUPPLIES, TESTING AND ACCESSORIES REQUIRED TO PROVIDE NEW MULTIPAIR COPPER CABLES AND ALL OTHER COMPONENTS NECESSARY TO ESTABLISH CONNECTION FROM THE PBX SYSTEM HEADEND LOCATION TO THE IDF ROOM(S) IN EACH CAMPUS BUILDING.
2. DRAWINGS AND LAYOUTS ARE PRIMARILY DIAGRAMMATIC IN NATURE. CONTRACTOR IS RESPONSIBLE FOR FINAL FOOTAGES AND EXACT LOCATIONS.
3. SEE LAN/WAN CABLING BLOCK DIAGRAM FOR HORIZONTAL CABLING AND DEVICE REQUIREMENTS.
4. ALL CABLES SHALL BE RATED FOR THE ENVIRONMENT IN WHICH THEY ARE INSTALLED, PER CODE.
5. PROVIDE ASP SHEATH, SOLID COPPER CONDUCTOR UNDERGROUND OSP CABLE CONTAINING "FLEXGEL III" FILLING COMPOUND, 24 AWG, IN PAIR COUNTS AND QUANTITIES AS INDICATED ON DRAWINGS. SEE SPECIFICATIONS FOR MORE INFORMATION.
6. GROUNDING AND BONDING OF ALL RISER AND BACKBONE CABLE SHIELD(S) IS REQUIRED. FOR CABLES SMALLER THAN 1 INCH IN DIAMETER, CONTRACTOR SHALL USE "STUD-COIN" TYPE BONDING CONNECTORS ON THE CABLES AND THE APPROPRIATE CONNECTOR AT THE GROUND POINT. FOR CABLES LARGER THAN 1.4 INCHES IN DIAMETER, CONTRACTOR SHALL USE (2) "BULLET BOND" CONNECTORS ON OPPOSING SIDES OF THE SHEATH. USE OF "PAIR SAVERS" IS REQUIRED ON ALL CABLES UNDER THE BONDING CLIP.
7. CONTRACTOR SHALL CROSS CONNECT ALL CABLE PAIRS FROM TELEPHONE HEAD-END TO TELEPHONE HANDSETS AS REQUIRED BY OWNER. SEE OWNER FOR CROSS CONNECT PLAN.
8. CONTRACTOR SHALL TEST ALL PAIRS OF ALL CABLES. CONTRACTOR SHALL RECORD ALL TESTS AND PROVIDE WRITTEN TEST RESULTS PER SPECIFICATIONS TO OWNER FOR REVIEW PRIOR TO COMPLETION OF PROJECT.
9. UNLESS OTHERWISE NOTED, PROVIDE TEN (10) FEET SLACK LOOP OF COPPER BACKBONE CABLE NEATLY COILED AND SECURED TO IDF BACKBOARDS AND TWENTY (20) FEET SLACK COIL OF COPPER BACKBONE CABLE NEATLY COILED AND SECURED ON HEAD-END BACKBOARD. VERIFY EXACT LOCATION OF SLACK COILS WITH PROJECT ENGINEER PRIOR TO FINAL INSTALLATION.
10. PROVIDE WEATHERPROOF PLASTIC LABELS ON EACH CABLE IDENTIFYING LOCATION OF BOTH ENDS AND PAIR COUNT, (I.E. IDF-1 TO MDF, 25-PR). PROVIDE WEATHERPROOF PLASTIC LABELS ON EACH CABLE AT EVERY VAULT, PULLBOX, HANDHOLE, AND AT TWENTY (20) FOOT INTERVALS WHERE CABLE IS VISIBLE AND ACCESSIBLE.
11. LABEL ALL CABLES, PROTECTORS, CROSS CONNECT BLOCKS, ETC. WITH MACHINE GENERATED LABELS PER SPECIFICATIONS. HAND WRITTEN LABELS ARE PROHIBITED. PROVIDE SAMPLE OF ALL LABELS FOR OWNER'S REVIEW PRIOR TO INSTALLATION.
12. THIS PROJECT WILL BE PERFORMED IN A PHASED CONSTRUCTION FORMAT, INCLUDING DEMOLITION PORTIONS. EACH PHASE OF CONSTRUCTION WILL BE COMPLETELY INSTALLED, LABELED AND TESTED, TO THE GREATEST EXTENT PHYSICALLY POSSIBLE, BEFORE MOVING TO THE NEXT PHASE.
13. CONTRACTOR SHALL EXERCISE EXTREME CAUTION TO NOT DISRUPT OTHER EXISTING SYSTEMS DURING INSTALLATION.
14. REFERENCE SPECIFICATIONS FOR ADDITIONAL INFORMATION AND REQUIREMENTS.

PAGING/PUBLIC ADDRESS SYSTEM NOTES:

1. IT IS THE INTENT OF THE DRAWINGS AND SPECIFICATIONS, WHICH ARE PRESENTED IN A "DESIGN-BUILD" FORMAT, FOR THE CONTRACTOR TO DESIGN, PROVIDE AND INSTALL A COMPLETE, FULLY OPERATIONAL AND TESTED STRUCTURED CABLING SYSTEM, INCLUDING ALL FINAL DESIGN, MATERIAL, EQUIPMENT, LABOR, SUPPLIES, TESTING AND ACCESSORIES REQUIRED TO FURNISH AND INSTALL A COMPLETE CONNECTION TO ALL LOCATIONS AS INDICATED ON THE DRAWINGS AND SPECIFICATIONS.
2. CONTRACTOR TO PROVIDE ALL CABLES, PUNCHBLOCKS, CABLE SUPPORTS, CABLE JUMPERS, CABINETS, GROUNDING, AND ANY ADDITIONAL HARDWARE AND COMPONENTS FOR A COMPLETE AND OPERABLE SYSTEM.
3. CONTRACTOR TO PROVIDE AND INSTALL ALL CONDUIT SLEEVES AND FIRESTOP SYSTEMS AS NEEDED AND AS REQUIRED BY CODE AND DISTRICT STANDARDS.
4. PROVIDE ALL NECESSARY CABLE SUPPORTS, HANGER WIRE/ROD, SLEEVES, RACKS, LADDER TRAY, D-RINGS, WIRE MANAGERS, RACK AND LADDER GROUNDING, LABELS, AND ANY ADDITIONAL EQUIPMENT AND HARDWARE FOR A COMPLETE AND OPERABLE SYSTEM.
5. CONTRACTOR TO ROUTE AND SUPPORT CABLE RUNS VIA J-HOOKS LOCATED ABOVE ACCESSIBLE CEILING SPACES. J-HOOKS SHALL NOT BE SPACED FURTHER THAN 48" FROM EACH OTHER. INSTALL CABLES IN CONDUIT WHEN TRAVELING ACROSS INACCESSIBLE CEILINGS, HARD LID CEILINGS, AND OPEN CEILINGS. PAINT CONDUIT TO MATCH SURROUNDING SURFACES WHEN INSTALLED IN OPEN CEILINGS AND EXPOSED AREAS.
6. VERIFY ALL QUANTITIES AND LOCATIONS WITH PLAN DRAWINGS AND DISTRICT SPECIFICATIONS PRIOR TO ROUGH-IN.
7. DRAWINGS AND LAYOUTS ARE PRIMARILY DIAGRAMMATIC, CONTRACTOR IS RESPONSIBLE FOR FINAL FOOTAGES AND EXACT LOCATIONS.

PUBLIC ADDRESS SYSTEMS BLOCK DIAGRAM

SCALE: NTS

1

IDENTIFICATION STAMP
DIV. OF THE STATE ARCHITECT
APP: 03-122664 INC:
REVIEWED FOR
SS ☑ FLS ☑ ACS ☑
DATE: 05/12/2023

pjhm architects
LICENSED ARCHITECT
RICHARD W. SIMPSON
NO. C15585
REN. 02/25
STATE OF CALIFORNIA
tk|sc COLLABORATIVE
11870 Pierce Street, Suite 160
Riverside, California 92505
951.299.4160 www.tk1sc.com
Project Leader - Nikolas Bruno
Electrical Lead - Nikolas Bruno
tk1sc Job #: B2202744.000
REGISTERED PROFESSIONAL ENGINEER
RICHARD W. SIMPSON
No. E15610
ELECTRICAL
STATE OF CALIFORNIA
OC Office: 24461 Ridge Route Drive #100, Laguna Hills, CA 92653 Phone: 949.496.6100 SD Office: 804 Pier View Way #103, Oceanside, CA 92054 Phone: 760.730.5557 LA Office: 837 Traction Avenue, #410, Los Angeles, CA 90013 Phone: 213.278.0172 Web: pjhm.com

HIGHLAND HIGH SCHOOL
50M POOL & AQUATICS CENTER
KERN HIGH SCHOOL DISTRICT

TECHNOLOGY
RISER
DIAGRAMS

T-1.0

8/2/2022 11:34:37 AM

WHERE THE FOLLOWING SYMBOLS ARE INDICATED ON THE ELECTRICAL DRAWINGS ARCHITECTURAL DRAWINGS AND/OR STRUCTURED CABLING SYSTEM DRAWINGS:

THE FOLLOWING SHALL BE PROVIDED, AS DEPICTED IN THE FOLLOWING DIAGRAMMATIC CONNECTIVITY DETAIL.

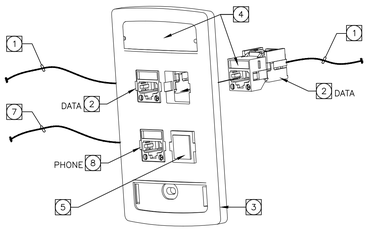

COMBINATION TELEPHONE AND DATA DEVICE 3

SCALE: N.T.S.

WHERE THE FOLLOWING SYMBOLS ARE INDICATED ON THE ELECTRICAL DRAWINGS ARCHITECTURAL DRAWINGS AND/OR STRUCTURED CABLING SYSTEM DRAWINGS:

WAP

THE FOLLOWING SHALL BE PROVIDED, AS DEPICTED IN THE FOLLOWING DIAGRAMMATIC CONNECTIVITY DETAIL.

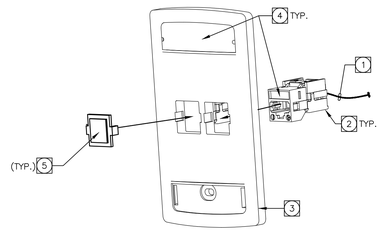

WIRELESS ACCESS POINT DUAL DATA DEVICE 2

SCALE: N.T.S.

WHERE THE FOLLOWING SYMBOLS ARE INDICATED ON THE ELECTRICAL DRAWINGS ARCHITECTURAL DRAWINGS AND/OR STRUCTURED CABLING SYSTEM DRAWINGS:

THE FOLLOWING SHALL BE PROVIDED, AS DEPICTED IN THE FOLLOWING DIAGRAMMATIC CONNECTIVITY DETAIL.

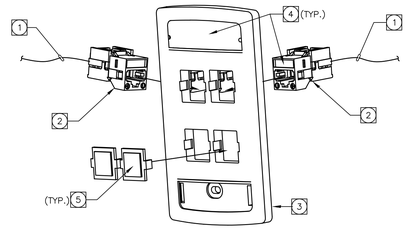

DUAL DATA DEVICE 1

SCALE: N.T.S.

WHERE THE FOLLOWING SYMBOLS ARE INDICATED ON THE ELECTRICAL DRAWINGS ARCHITECTURAL DRAWINGS AND/OR STRUCTURED CABLING SYSTEM DRAWINGS:

WP

THE FOLLOWING SHALL BE PROVIDED, AS DEPICTED IN THE FOLLOWING DIAGRAMMATIC CONNECTIVITY DETAIL.

CONDUIT AND CABLES PER PLANS

CONDUIT BY E.C., SHOWN FOR REFERENCE ONLY

FLUSH-MOUNT SPEAKER BACK BOX

WALL

WEATHER PROOF SPEAKER PER SPECS

BAFFLE PER SPECS

NOTES:

1. SEE ARCHITECTURAL PLANS FOR ADDITIONAL DETAILS.
2. MOUNT SPEAKER BAFFLE FLUSH TO WALL. PROVIDE WEATHERPROOF SEAL.
3. CONTRACTOR SHALL PAINT BAFFLE TO MATCH SURROUNDING SURFACES.
4. PROVIDE CABLING PER SYSTEM SPECIFICATIONS.
5. VERIFY FINAL MOUNTING HEIGHT WITH OWNER IN FIELD PRIOR TO ROUGH-IN.
6. MAX. INSTALLED WEIGHT 6.5 POUNDS.

PUBLIC ADDRESS SPEAKER - FLUSH MOUNT DETAIL 5

SCALE: NTS

WHERE THE FOLLOWING SYMBOLS ARE INDICATED ON THE ELECTRICAL DRAWINGS ARCHITECTURAL DRAWINGS AND/OR STRUCTURED CABLING SYSTEM DRAWINGS:

WP

THE FOLLOWING SHALL BE PROVIDED, AS DEPICTED IN THE FOLLOWING DIAGRAMMATIC CONNECTIVITY DETAIL.

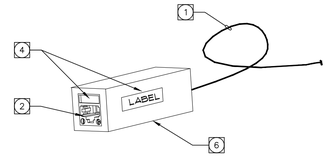

SINGLE VOICE OR DATA DEVICE 4

SCALE: N.T.S.

FACEPLATE NOTES:

1. PROVIDE (1) CAT-6, 4-PAIR UTP CABLE(S) TO RESPECTIVE IDF RACK. TERMINATE STATION END(S) IN STATION CONNECTOR(S) PER SPECIFICATIONS. TERMINATE RACK END(S) ON CAT-6 PATCH PANEL(S) PER SPECIFICATIONS. COLOR OF CABLE(S) PER DISTRICT STANDARDS.
2. PROVIDE CAT-6 4-PAIR STATION CONNECTOR PER SPECIFICATIONS. COLOR PER DISTRICT STANDARDS.
3. PROVIDE FACEPLATE PER SPECIFICATIONS. FACEPLATE MATERIAL AND FINISH SHALL MATCH ADJACENT/NEARBY POWER FACEPLATES, U.O.N. IN SPECIFICATIONS. PROVIDE FLOOR BOX, POWER POLE AND MODULAR FURNITURE DEVICE BRACKETS/CUSTOM ADAPTERS AS REQUIRED FOR A COMPLETE INSTALLATION. INCLUDE ALL COSTS IN BASE BID.
4. PROVIDE FACEPLATE LABELING PER SPECIFICATIONS. SEE SPECIFICATIONS FOR ALL OTHER LABELING REQUIREMENTS.
5. BLANK INSERT. ALL UNUSED OPENINGS SHALL BE COVERED WITH A BLANK INSERT MATCHING THE COLOR OF THE FACEPLATE.
6. PROVIDE (1) SURFACE MOUNT, ONE-PORT HOUSING PER SPECIFICATION.
7. PROVIDE (1) CAT 6, 4 PAIR UTP CABLE(S) FOR ANALOG TELEPHONE. TERMINATE STATION END(S) IN STATION CONNECTOR(S) PER SPECIFICATIONS. TERMINATE RACK END(S) ON PATCH PANEL(S).
8. PROVIDE (1) CAT 6, 4-PAIR 8P8C STATION CONNECTOR FOR ANALOG TELEPHONE. COLOR PER DISTRICT STANDARDS

GENERAL NOTES:

1. INSTALLATION OF EQUIPMENT AND WIRING MUST MEET ALL APPLICABLE CODES AND STANDARDS INCLUDING BUT NOT LIMITED TO CEC, NFPA, ANSI/EIA/TIA AND ISO 9001.
2. EQUIPMENT AND MATERIALS MUST COMPLY WITH UL LISTING AND EACH ITEM STAMPED OR LABELED AS SUCH.
3. COMPLIANCE WITH ANSI/TIA/EIA 569-C. COMMERCIAL BUILDING STANDARDS FOR TELECOMMUNICATIONS PATHWAYS AND SPACES.
4. COMPLIANCE WITH ANSI/TIA/EIA 568-D. COMMERCIAL BUILDING TELECOMMUNICATIONS CABLING STANDARDS.
5. DRAWINGS AND LAYOUTS ARE PRIMARILY DIAGRAMMATIC. CONTRACTOR IS RESPONSIBLE FOR FINAL FOOTAGES AND EXACT LOCATIONS.
6. CONTRACTOR SHALL NOTE IN WRITING, ANY DISCREPANCIES BETWEEN DRAWINGS AND SPECIFICATIONS. AS SUCH DISCREPANCIES ARISE, THE MORE STRINGENT SHALL TAKE PRECEDENCE.
7. COMMUNICATIONS CABLES (ANY TYPE) ROUTED THRU FURNITURE SYSTEMS SHALLBE ROUTED VIA DEDICATED COMMUNICATIONS PATHWAY, WHEN AVAILABLE. WHEN DEDICATED COMMUNICATIONS PATHWAY IS UNAVAILABLE, THE ABOVE-MENTIONED CABLES SHALL BE ROUTED IN A BARRIERED SYSTEMS FURNITURE RACEWAY SEPARATE FROM POWER CONDUCTORS PER EIA/TIA STANDARDS AND NEC REQUIREMENTS.
8. CONTRACTOR SHALL VERIFY SYSTEMS FURNITURE TYPE AND CABLE ROUTING/FACEPLATE LOCATION WITHIN SYSTEMS FURNITURE PRIOR TO BID. INCLUDE ALL COSTS IN BASE BID.
9. REFERENCE ALL ELECTRICAL DRAWINGS.
10. REFERENCE ALL STRUCTURED CABLING SYSTEM DRAWINGS.
11. REFERENCE ALL ARCHITECTURAL DRAWINGS.
12. REFERENCE ALL ELECTRICAL AND STRUCTURED CABLING SYSTEM SPECIFICATIONS.
13. CONTRACTOR SHALL UTILIZE CONDUIT(S)/SLEEVE(S) SEQUENTIALLY, MAXIMIZING THE CABLE FILL IN EACH BEFORE UTILIZING THE NEXT CONDUIT(S)/SLEEVE(S). MAXIMUM ALLOWABLE CONDUIT FILL SHALL BE BASED ON NEC TABLES FOR CONDUIT FILL.
14. IT IS THE INTENT OF THESE DRAWINGS WHICH ARE PRESENTED IN A DESIGN-BUILD FORMAT, FOR THE CONTRACTOR TO DESIGN, PROVIDE AND INSTALL A COMPLETE, FULLY OPERATIONAL AND TESTED SYSTEMS.
15. CONTRACTOR IS RESPONSIBLE TO FIELD VERIFY ALL EXISTING CONDITIONS PRIOR TO BID. FAILURE TO DO SO WILL NOT RESULT IN ADDITIONAL PAYMENTS TO CONTRACTOR. CONTRACTOR IS RESPONSIBLE FOR FINAL FOOTAGES AND EXACT LOCATIONS.
16. CONTRACTOR IS RESPONSIBLE TO VERIFY ALL PATHWAY ROUTES, DISTANCES AND CONDITIONS PRIOR TO ORDERING AND INSTALLING MATERIALS. CONTRACTOR IS REQUIRED TO MANDREL, SWAB AND MULE TAPE MEASURE EACH CONDUIT PATHWAY PRIOR TO USE.
17. INSTALLATION, RELOCATION AND TESTING OF ALL EQUIPMENT SHALL BE INCLUDED IN BID. IT IS THE CONTRACTOR'S RESPONSIBILITY TO PROVIDE ALL NECESSARY LABOR AND MATERIALS FOR COMPLETE AND FULLY OPERATIONAL SYSTEMS AT NO ADDITIONAL COST TO THE DISTRICT.

IDENTIFICATION STAMP
DIV. OF THE STATE ARCHITECT
APP: 03-122664 INC:
REVIEWED FOR
SS ☑ FLS ☑ ACS ☑
DATE: 05/12/2023

pjhm architects
Web: pjhm.com
OC Office: 24461 Ridge Route Drive #100, Laguna Hills, CA • 92653 Phone: 949.496.6155
SD Office: 804 Pier View Way #103, Oceanside, CA • 92054 Phone: 760.730.5527
LA Office: 837 Traction Avenue, #410, Los Angeles, CA • 90013 Phone: 213.278.0172

LICENSED ARCHITECT
RICHARD W. SIMPSON
NO. C15585
REN. 02/25
STATE OF CALIFORNIA

tk|sc COLLABORATIVE
11870 Pierce Street, Suite 160
Riverside, California 92505
951.299.4160 www.tk1sc.com
Project Leader - Nikolas Bruno
Electrical Lead - Nikolas Bruno
tk1sc Job #: B2202744.000

REGISTERED PROFESSIONAL ENGINEER
RICHARD W. SIMPSON
NO. E15610
REV 2024
ELECTRICAL
STATE OF CALIFORNIA

HIGHLAND HIGH SCHOOL
50M POOL & AQUATICS CENTER
KERN HIGH SCHOOL DISTRICT

TECHNOLOGY
FACEPLATE DETAILS

T-3.0

8/2/2022 11:34:37 AM

RECEPTACLE MOUNTING KEY NOTES:

1. 4S DEEP NEMA JUNCTION BOX WITH RECEPTACLES PER PLAN ATTACHED SECURELY TO LADDER RUNWAY. VERIFY CORRECT SIDE OF LADDER RUNWAY/EXACT MOUNTING LOCATION ON LADDER RUNWAY WITH OWNER AND SCS CONTRACTOR PRIOR TO ROUGH-IN. E.C. TO INSTALL JUNCTION BOX ON SIDE OF LADDER RUNWAY ONLY WITH RECEPTACLE PERPENDICULAR TO FLOOR. JUNCTION BOX SHALL NOT BE INSTALLED ON TOP OR BOTTOM OF LADDER RUNWAY.
2. PERMANENT LABELS INDICATING PANEL ID, CIRCUIT NUMBER(S) AND NEMA/IEC RECEPTACLE TYPE. PROVIDE LABELS ON FACE OF BOX.
3. CONDUIT AND BRANCH CIRCUIT PER PLAN. ROUTE CONDUITS TO PANEL(S) ABOVE ACCESSIBLE CEILING—IF PROVIDED ON PROJECT. IN NO CASE, SHALL CONDUITS BE ROUTED THROUGH/WITHIN LADDER RUNWAY VERTICAL WIRE MANAGERS OR OTHERWISE OBSTRUCT USE OF RACKS BY COMMUNICATIONS EQUIPMENT OR CABLING.
4. LADDER RUNWAY SYSTEM SHOWN HERE FOR REFERENCE ONLY. SEE LADDER RUNWAY SYSTEM DETAIL ON THIS SHEET FOR LADDER RUNWAY REQUIREMENTS.
5. EQUIPMENT RACK AND VERTICAL WIRE MANAGER BY SCS CONTRACTOR. SHOWN FOR REFERENCE ONLY. EXACT EQUIPMENT CONFIGURATION MAY VARY.
6. JUNCTION BOX SHALL NOT OBSTRUCT VERTICAL WIRE MANAGERS OR EQUIPMENT RACK MOUNTING PLATES.

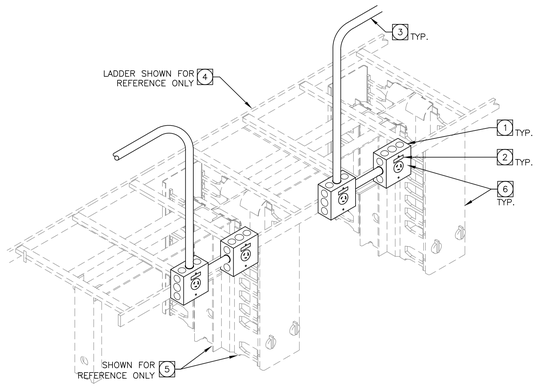

MDF/IDF ROOM LADDER TRAY RECEPTACLE MOUNTING DETAIL 3

SCALE: NTS

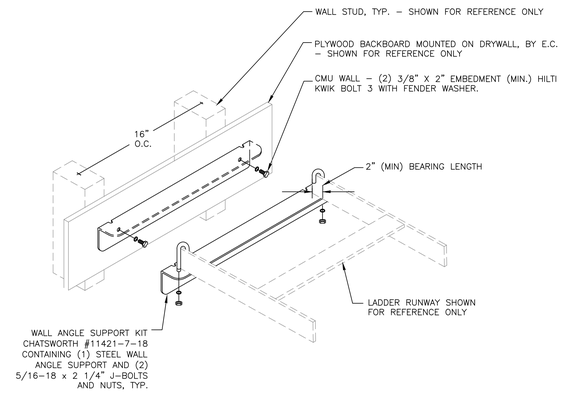

LADDER TRAY WALL ANGLE SUPPORT 2

SCALE: N.T.S.

BACKBOARD AND GROUNDING DETAIL NOTES:

A. WHITE ENAMEL PAINTED A/C GRADE FIRE RATED PLYWOOD TELECOM BACKBOARD, (8' HIGH x 3/4" THICK x WIDTH PER PLANS) BY E.C. LEAVE ONE FIRE MARSHAL STAMP UNPAINTED ON EACH SHEET. MOUNT 6" ABOVE FINISHED FLOOR.

– ANCHOR TO CMU WALL WITH 1/4" x 1-5/8" EMBED HILTI KWIK HUS EZ SCREW ANCHOR (ICC ESR 3056) AT 16" ON CENTER.
– RECESS ALL SCREWS/BOLTS.

B. U.L. LISTED TELECOMMUNICATIONS GROUND BUS BAR (TMGB AND TGB). IN IDF AND MDF ROOMS PROVIDE TGB, CHATSWORTH #40153-012. IN MPOE ROOMS PROVIDE TMGB CHATSWORTH #40153-020, U.O.N. ON PLANS.

C. REFER TO TELECOM RISER AND GROUNDING DIAGRAM FOR CONNECTION OF TMGB TO MAIN ELECTRICAL SERVICE GROUND. CONNECT TGB'S TO ELECTRICAL PANEL GROUND BUS WITH 3/4"C. AND #6AWG GROUND CONDUCTOR. ALL CONNECTIONS SHALL BE WITH 2-HOLE COMPRESSION LUGS.

D. INDIVIDUAL #6AWG GROUND CONDUCTORS TO EACH CABINET, RACK, LADDER TRAY, CONDUIT, ETC. BY SCS CONTRACTOR. CONNECT TO EQUIPMENT AND TO GROUND BUS BAR VIA 2-HOLE COMPRESSION LUGS ONLY. DAISY-CHAINING OF GROUND CONDUCTOR TO MORE THAN ONE PIECE OF EQUIPMENT IS PROHIBITED.

E. INCOMING FEED CONDUITS AND INNER-BUILDING CONDUITS. QUANTITY AND SIZE PER PLANS.

F. INNER-BUILDING CONDUITS AND SLEEVES. QUANTITY AND SIZE PER PLANS.

G. TELECOM BONDING BACKBONE CONDUCTOR BETWEEN TMGB AND ALL TGB'S. REFER TO SITE AND FLOOR PLANS FOR MORE INFORMATION.

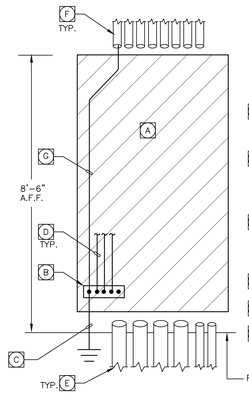

TELECOM BACKBOARD AND GROUND BUS BAR 1

SCALE: NTS

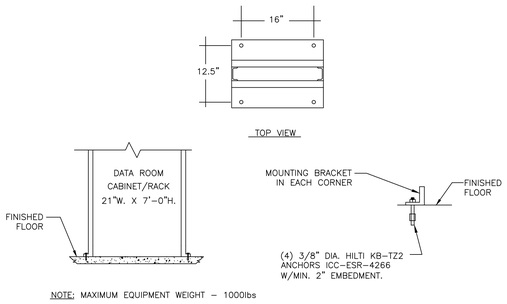

NOTE: MAXIMUM EQUIPMENT WEIGHT – 1000lbs

DATA CABINET/RACK FLOOR-MOUNTING DETAIL 6

SCALE: N.T.S.

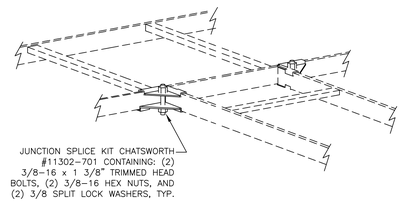

JUNCTION SPLICE DETAIL 5

SCALE: N.T.S.

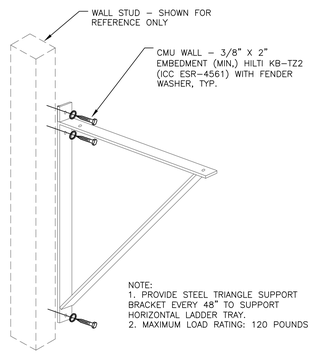

TRIANGLE SUPPORT BRACKET DETAIL 7

SCALE: N.T.S.

LADDER TRAY SCHEDULE

CABLE TRAY STYLE	TRAY WIDTH	SIDE RAIL HEIGHT	RUNG SPACING	LOAD DEPTH	RADIUSED FITTINGS INSIDE BEND RADIUS	SYSTEM LOAD	TRAY COLOR	REMARKS
LADDER	12"	1-1/2"	9"	NA	NA	30 LBS/LF	BLACK	LENGTH PER PLANS

LADDER TRAY SPECIFICATIONS:

1. CABLE TRAY DESIGN
   U.L. LISTED LADDER TRAY SYSTEM SHALL BE MADE OF STRAIGHT SECTIONS, FITTINGS, AND ALL ACCESSORIES. STANDARD LADDER TRAYS SHALL BE U.L. CLASSIFIED AS EQUIPMENT GROUNDING CONDUCTORS.
2. CABLE TRAY MATERIALS
   STRAIGHT SECTIONS SHALL BE CONSTRUCTED OF 3/8" X 1-1/2" X .065 WALL RECTANGULAR STEEL TUBING. CROSS MEMBERS SHALL BE CONSTRUCTED OF 1/2" X 1" X .065" RECTANGULAR STEEL TUBING AND WELDED AT 9" INTERVALS.
3. CABLE TRAY SEISMIC BRACING REQUIREMENTS
   LADDER TRAY SYSTEM LOCATED IN SEISMIC DESIGN CATEGORY C, D, E OR F AS DEFINED BY THE CALIFORNIA BUILDING CODE SHALL BE SUPPORTED AND BRACED IN ACCORDANCE WITH THE CALIFORNIA BUILDING CODE AND.
4. LADDER TRAY FITTINGS AND ACCESSORIES
   ALL FITTINGS ACCESSORIES SHALL BE FURNISHED AS REQUIRED TO PROTECT, SUPPORT AND INSTALL A COMPLETE LADDER TRAY SYSTEM.
5. LADDER TRAY ROUTING REQUIREMENTS
   LADDER TRAY SHALL BE ROUTED AROUND OBSTRUCTIONS AS REQUIRED, BUT IN NO CASE SHALL TRAY PREVENT REMOVAL OF CEILING TILES OR PANELS, NOR BLOCK ACCESS TO ELECTRICAL, PLUMBING OR MECHANICAL EQUIPMENT.
6. LADDER TRAY SEPARATION REQUIREMENTS
   TRAY USED FOR SUPPORTING COMMUNICATION CABLING SHALL BE SEPARATED FROM ANY ELECTRICAL BRANCH CIRCUIT BY 3" AND ANY ELECTRICAL FEEDER BY 18".
7. THIS DETAIL IS GENERIC IN NATURE AND IS INTENDED TO DEPICT A VARIETY OF LADDER TRAY INSTALLATION SCENARIOS – NOT ALL OF WHICH APPLY TO A GIVEN PROJECT. IT IS THE CONTRACTOR'S RESPONSIBILITY TO EXAMINE ALL PROJECT PLANS AND PROVIDE A LADDER TRAY INSTALLATION APPROPRIATE TO THE SITUATION, UTILIZING PORTIONS OF THIS DETAIL AS APPLICABLE, THAT RESULT IN NEAT WORKMANSHIP AND COMPLY WITH ANSI/EIA/TIA STANDARDS.
8. FIRE STOPPING REQUIREMENTS
   FIRE STOPPING OF THRU PENETRATIONS WHERE THE TRAY OR ITS CONTENTS PENETRATE A FIRE RATED WALL, FLOOR, ETC., SHALL BE ACCOMPLISHED BY THE E.C. UTILIZING U.L. LISTED FIRE STOPPING METHODS. E.C. SHALL VERIFY TYPES/QUANTITIES OF CABLES TO BE UTILIZED BY THE OWNER AT EACH THRU PENETRATION CONDITION AND PROVIDE A SUITABLE REENTERABLE FIRESTOP SYSTEM LISTED FOR EACH FIRESTOP CONDITION.
9. RADIUS CABLE DROPS
   PROVIDE RADIUS CABLE DROPOUT(S) MEETING EIA/TIA CABLE BENDING CRITERIA AT TRAY STOPPING POINT WITHIN A TELECOMMUNICATIONS CLOSET OR ANY DISCONTINUITY IN TRAY PATH.
10. LADDER TRAY COORDINATION REQUIREMENTS
    CONTRACTOR SHALL COORDINATE TRAY SYSTEM INSTALLATION WITH ALL TRADES PRIOR TO ORDERING AND AGAIN PRIOR TO INSTALLING TRAY SYSTEM.
11. LADDER TRAY LOADING CAPACITIES
    INSTALLED LADDER TRAY SHALL SUPPORT SYSTEM LOAD AS DEFINED IN LADDER TRAY SCHEDULE.
12. LADDER TRAY MANUFACTURERS
    MANUFACTURED BY CHATSWORTH OR EQUAL BY COOPER B-LINE, CABLOFIL, AND MONSYSTEMS.

LADDER TRAY INSTALLATION REQUIREMENTS:

1. THE CONTRACTOR SHALL BE RESPONSIBLE FOR THE FURNISHING OF ALL MATERIAL, LABOR, EQUIPMENT, AND SERVICES, IN CONNECTION WITH THE INSTALLATION OF A COMPLETE AND FULLY FUNCTIONING AND CODE COMPLIANT INSTALLATION.
2. IT IS THE INTENT OF THE CONTRACT DOCUMENTS, WHICH ARE PRESENTED IN A DIAGRAMMATIC FORMAT, TO PROVIDE CONTRACTOR INFORMATION THAT SUPPLEMENTS AND ENHANCES THE GENERALLY ACCEPTED CONSTRUCTION MEANS, METHODS, TECHNIQUES, SEQUENCES AND PROCEDURES EMPLOYED IN CONNECTION WITH INSTALLATION OF THIS TYPE OF PRODUCT / SYSTEM.
3. THE CONTRACTOR SHALL ALSO INCORPORATE THE REQUIREMENTS OF THE MANUFACTURER'S INSTALLATION INSTRUCTIONS / WARRANTY REQUIREMENTS AS PART OF THE REQUIREMENTS OF THE CONSTRUCTION DOCUMENTS. IN THE EVENT OF A CONFLICT BETWEEN THE CONTRACT DOCUMENT REQUIREMENTS AND THE MANUFACTURER'S INSTALLATION REQUIREMENTS, THE MORE STRINGENT REQUIREMENTS SHALL APPLY – UNLESS THE MORE STRINGENT REQUIREMENT VOIDS APPLICABLE WARRANTIES OR VIOLATES THE REQUIREMENTS OF THE LOCAL AUTHORITY HAVING JURISDICTION. ANY SUCH CONFLICT SHALL IMMEDIATELY BE BROUGHT TO THE ATTENTION OF THE ENGINEER IN WRITING THROUGH THE FORMAL RFI PROCESS.
4. REFER TO THE ASSOCIATED SCHEDULES, SCHEMATICS, DRAWINGS, AND SPECIFICATIONS FOR DETAILED INFORMATION / REQUIREMENTS ON THIS PRODUCT / SYSTEM.

LADDER TRAY NOTES:

1. END CLOSING KIT. LADDER TRAY TERMINATIONS NOT ADJACENT TO A WALL OR JUNCTION SHALL BE COVERED BY AN END CLOSING KIT OR PROTECTIVE GROMMETS.
2. TRIANGULAR SUPPORT BRACKET. (CHATSWORTH #11312-712) WITH (2) 3/8" X 2" EMBEDMENT (MIN.) HILTI KWIK BOLT 3 WITH FENDER WASHER INTO CMU WALL. REQUIRED IN EVERY TRIANGLE SUPPORT BRACKET. PROVIDE TRIANGLE SUPPORT BRACKET AT 48" INTERVALS. MAX WEIGHT PER BRACKET IS 120 LBS.
3. CABLE DROPOUTS SHALL BE USED WHEREVER CABLES LEAVE LADDER TRAY.
4. LADDER TRAY. SIZE AND LENGTH PER PLANS.
5. FIREWALL PENETRATION SLEEVE(S) WITH BUSHINGS BY E.C. SIZE AND QUANTITY PER PLANS. SCS CONTRACTOR TO FIRESEAL INSIDE OF SLEEVE AFTER CABLE INSTALLATION.
6. CABLE SPILLWAY/WATERFALL. TYPICAL AT ALL CONDUITS, INCOMING CABLE TRAY, OR FIREWALL PENETRATIONS.
7. PLYWOOD BACKBOARD OR WALL.
8. BUTT SPLICE.
9. JUNCTION SPLICE.
10. WALL ANGLE SUPPORT KIT. (CHATSWORTH #11421-712).
11. SPLICE/JUNCTION GROUNDING KIT SHALL BE USED TO BOND SECTIONS OF TRAY TOGETHER FOR GROUNDING PURPOSES.
12. LADDER TRAY SHALL BE GROUNDED TO BUSBAR WITH #6 AWG SOLID WIRE WITH GREEN INSULATION AND (2) HOLE GROUNDING LUG.

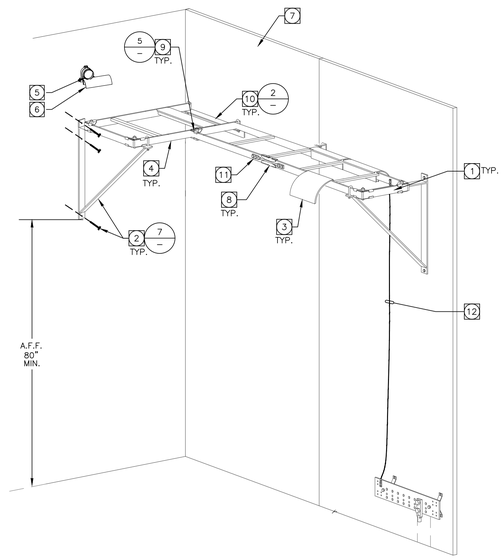

LADDER RUNWAY SYSTEM DETAIL 4

SCALE: NTS

IDENTIFICATION STAMP
DIV. OF THE STATE ARCHITECT
APP: 03-122664 INC:
REVIEWED FOR
SS ☑ FLS ☑ ACS ☑
DATE: 05/12/2023

pjhm architects
Web: pjhm.com
Phone: 213.278.0112
837 Traction Avenue, #410, Los Angeles, CA 90013
LA Office: 760.730.5527
804 Pier View Way #103, Oceanside, CA 92054
SD Office: 949.496.6133
24461 Ridge Route Drive #100, Laguna Hills, CA 92653
OC Office: 760.730.5527

LICENSED ARCHITECT
RICHARD W. SIMPSON
No. C15585
REN. 02/25
STATE OF CALIFORNIA

tk|sc COLLABORATIVE
11870 Pierce Street, Suite 160
Riverside, California 92505
951.299.4160 www.tk1sc.com
Project Leader - Nikolas Bruno
Electrical Lead - Nikolas Bruno
tk1sc Job #: B2202744.000

REGISTERED PROFESSIONAL ENGINEER
RICHARD W. SIMPSON
No. E15610
REV 2 02/24
ELECTRICAL
STATE OF CALIFORNIA

HIGHLAND HIGH SCHOOL
50M POOL & AQUATICS CENTER
KERN HIGH SCHOOL DISTRICT

TECHNOLOGY DETAILS

T-3.1

8/2/2022 11:34:37 AM

CAMERA MOUNTING DETAILS GENERAL NOTES:

1. THE MOUNTING DETAILS ON THIS PAGE ARE DIAGRAMMATIC AND ARE ONLY INTENDED TO CONVEY THE GENERAL SCOPE INVOLVED IN MOUNTING A CAMERA.
2. CONTRACTOR SHALL BE RESPONSIBLE TO CREATE AND FULLY DESIGN ALL MOUNTING DETAILS REQUIRED ON THIS PROJECT INCLUDING ALL COSTS TO COMPLETE THE INSTALLATION.
3. CONTRACTOR SHALL BE RESPONSIBLE TO PROVIDE AND INSTALL ALL FASTENERS, BRACKETS, ATTACHMENTS, ETC. PER MANUFACTURER'S REQUIREMENTS.
4. CONDUIT SHALL BE CONCEALED IN BUILDING STRUCTURE ELEMENTS. ALL POTENTIALLY EXPOSED CONDUIT SHALL BE APPROVED BY THE OWNER PRIOR TO ROUGH-IN, AND PAINTED TO MATCH SURROUNDING SURFACE COLOR.
5. CUTTING OF STRUCTURAL MEMBERS SHALL NOT BE DONE WITHOUT NOTIFYING AND OBTAINING PRIOR WRITTEN APPROVAL FROM THE STRUCTURAL ENGINEER.
6. ALL METALLIC CONDUIT (EMT), SUPPORTS, BOLTS, STRAPS, AND FASTENERS INSTALLED ON EXTERIOR OF ANY STRUCTURE SHALL BE CORROSION-RESISTANT. CONNECTORS AND COUPLERS SHALL BE RAIN-TIGHT COMPRESSION FITTINGS.
7. CONTRACTOR SHALL PROVIDE 30-YEAR WEATHERPROOF SEALANT (CLEAR) BETWEEN ALL CAMERA ENCLOSURES AND BUILDING STRUCTURES, AND AT CONDUIT PENETRATIONS THROUGH STRUCTURE EXTERIORS. PROVIDE A CONTINUOUS BEAD OF SEALANT COMPLETELY AROUND THE EDGE OF THE CAMERA ENCLOSURE AND THE STRUCTURE.

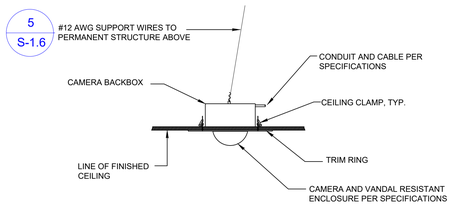

NOTE:
1. CONTRACTOR SHALL INSTALL ACCORDING TO MANUFACTURER'S INSTRUCTIONS.
2. CAMERA AND ENCLOSURE TOTAL WEIGHT 15 POUNDS MAXIMUM.

INTERIOR CAMERA DETAIL - CEILING MOUNTED 5

SCALE: N.T.S

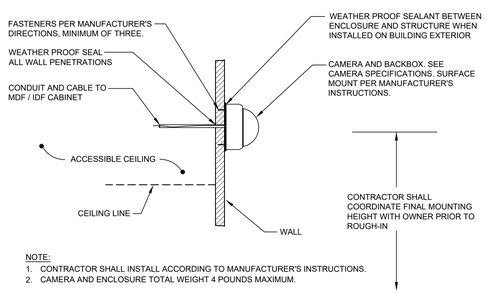

NOTE:
1. CONTRACTOR SHALL INSTALL ACCORDING TO MANUFACTURER'S INSTRUCTIONS.
2. CAMERA AND ENCLOSURE TOTAL WEIGHT 4 POUNDS MAXIMUM.

CAMERA - WALL MOUNT 6

SCALE: N.T.S

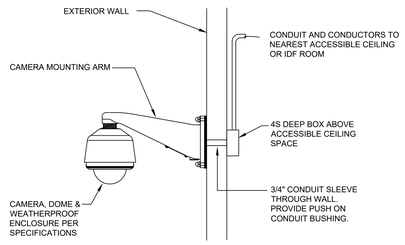

NOTE:
1. CONTRACTOR SHALL INSTALL ACCORDING TO MANUFACTURER'S INSTRUCTIONS.
2. CAMERA AND ENCLOSURE TOTAL WEIGHT 15 POUNDS MAXIMUM.

PENDANT CAMERA - WALL MOUNT 7

SCALE: N.T.S

EQUIPMENT LIST:
2 – DOOR CONTACTS

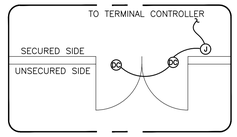

PLAN VIEW

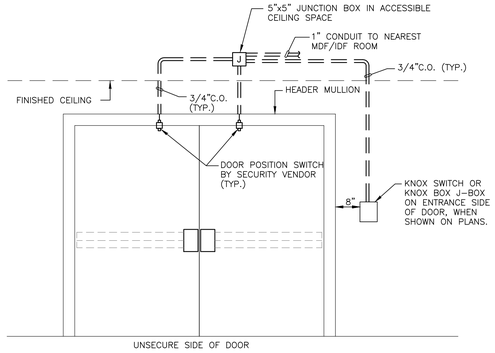

ELEVATION VIEW

DOUBLE DOOR WITH CONTACTS 3

SCALE: N.T.S

EQUIPMENT LIST:
1 – DOOR CONTACT

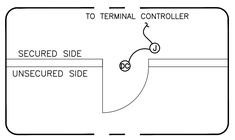

PLAN VIEW

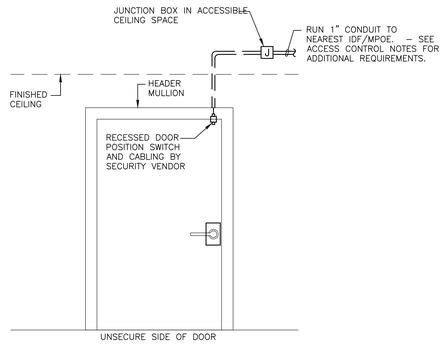

ELEVATION VIEW

SINGLE DOOR WITH CONTACT 4

SCALE: N.T.S

ACCESS CONTROL PORTAL SEQUENCE OF OPERATIONS

1. DOOR IS LOCKED ON THE NON-SECURE SIDE.
2. TO OPEN DOOR FROM NON-SECURE SIDE, A VALID CARD MUST BE PRESENTED AT THE CARD READER TO SHUNT THE ALARM AND UNLOCK THE DOOR.
3. DOOR IS UNLOCKED ON THE SECURE SIDE AT ALL TIMES.
4. ON THE SECURED SIDE, REQUEST TO EXIT MOTION DETECTOR BYPASSES ALARM UPON EXIT AND A FORCE NOT MORE THAN 15 POUNDS APPLIED TO PANIC DEVICE OPENS THE DOOR AT ALL TIMES.

CODE NOTE:

1. ALL REQUIRED EGRESS DOORS SHALL BE OPENABLE WITHOUT USE OF ANY KEY OR SPECIAL KNOWLEDGE, TYPICAL WHERE APPLICABLE CBC 1010.1.9.

COORDINATION NOTE:

1. COORDINATE WITH ARCHITECT AND DOOR HARDWARE VENDOR PRIOR TO ROUGH-IN AND INSTALLATION.
2. REFER TO ARCHITECT DOOR SCHEDULE AND DIV 8 SPEC FOR DOOR HARDWARE INFORMATION.

EMERGENCY OPERATION NOTE:

1. DOOR MUST REMAIN UNLOCKED ON THE SECURE SIDE AT ALL TIMES.
2. PANIC HARDWARE SHALL STAY OPERATIONAL IN THE EVENT OF A LOCKDOWN.

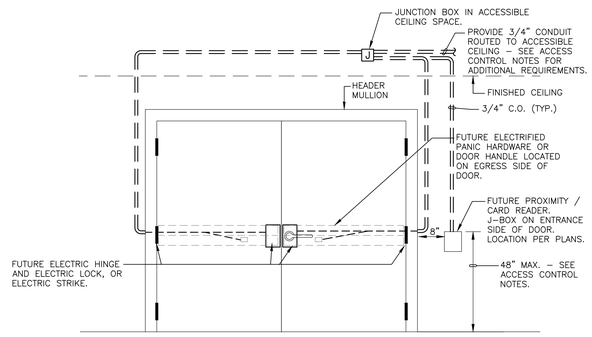

DOUBLE DOOR WITH CARD READER & ELECTRIC LOCK 2

SCALE: N.T.S

ACCESS CONTROL PORTAL SEQUENCE OF OPERATIONS

1. DOOR IS LOCKED ON THE NON-SECURE SIDE.
2. TO OPEN DOOR FROM NON-SECURE SIDE, A VALID CARD MUST BE PRESENTED AT THE CARD READER TO SHUNT THE ALARM AND UNLOCK THE DOOR.
3. DOOR IS UNLOCKED ON THE SECURE SIDE AT ALL TIMES.
4. ON THE SECURED SIDE, REQUEST TO EXIT MOTION DETECTOR BYPASSES ALARM UPON EXIT AND A FORCE NOT MORE THAN 15 POUNDS APPLIED TO PANIC DEVICE OPENS THE DOOR AT ALL TIMES.

CODE NOTE:

1. ALL REQUIRED EGRESS DOORS SHALL BE OPENABLE WITHOUT USE OF ANY KEY OR SPECIAL KNOWLEDGE, TYPICAL WHERE APPLICABLE CBC 1010.1.9.

COORDINATION NOTE:

1. COORDINATE WITH ARCHITECT AND DOOR HARDWARE VENDOR PRIOR TO ROUGH-IN AND INSTALLATION.
2. REFER TO ARCHITECT DOOR SCHEDULE AND DIV 8 SPEC FOR DOOR HARDWARE INFORMATION.

EMERGENCY OPERATION NOTE:

1. DOOR MUST REMAIN UNLOCKED ON THE SECURE SIDE AT ALL TIMES.
2. PANIC HARDWARE SHALL STAY OPERATIONAL IN THE EVENT OF A LOCKDOWN.

DOUBLE DOOR WITH CARD READER & ELECTRIC LOCK 2

SCALE: N.T.S

IDENTIFICATION STAMP
DIV. OF THE STATE ARCHITECT
APP: 03-122664 INC:
REVIEWED FOR
SS ☑ FLS ☑ ACS ☑
DATE: 05/12/2023

pjhm architects
LICENSED ARCHITECT RAYMOND W. SIMPSON JR. No. C15585 REN. 02/25 STATE OF CALIFORNIA
tk|sc COLLABORATIVE
11870 Pierce Street, Suite 160
Riverside, California 92505
951.299.4160 www.tklsc.com
Project Leader - Nikolas Bruno
Electrical Lead - Nikolas Bruno
tk1sc Job #: B2202744.000
REGISTERED PROFESSIONAL ENGINEER RAYMOND W. SIMPSON JR. No. E15610 ELECTRICAL STATE OF CALIFORNIA
OC Office: 24461 Ridge Route Drive #100, Laguna Hills, CA 92653 Phone: 949.496.6161 SD Office: 804 Pier View Way #103, Oceanside, CA 92054 Phone: 760.730.5507 LA Office: 837 Traction Avenue, #410, Los Angeles, CA 90013 Phone: 213.278.0172 Web: pjhm.com

HIGHLAND HIGH SCHOOL
50M POOL & AQUATICS CENTER
KERN HIGH SCHOOL DISTRICT

TECHNOLOGY DETAILS
T–3.2

8/2/2022 11:34:37 AM

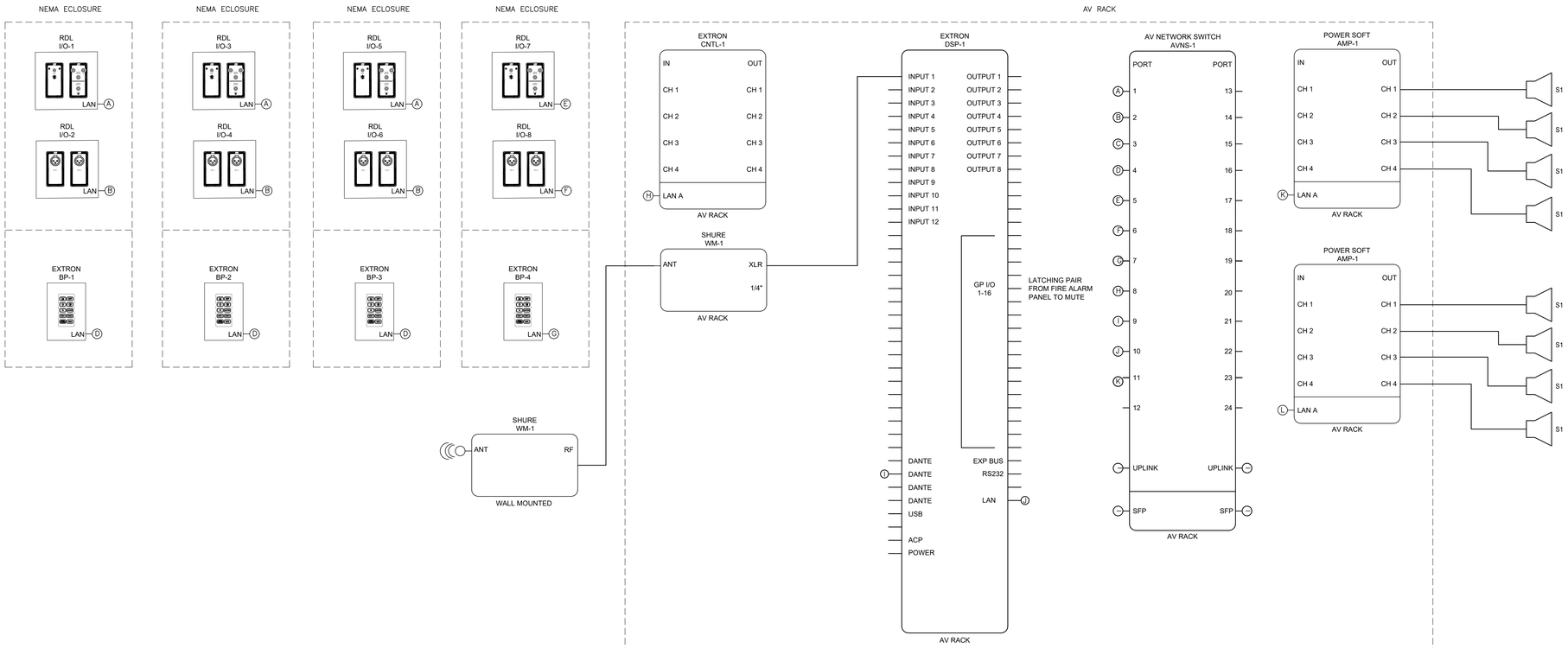

AV SINGLE LINE - POOL AREA

SCALE: N.T.S.

1

IDENTIFICATION STAMP
DIV. OF THE STATE ARCHITECT
APP: 03-122664 INC:
REVIEWED FOR
SS ☑ FLS ☑ ACS ☑
DATE: 05/12/2023

pjhm architects

LICENSED ARCHITECT
THOMAS W. KRUSE
NO. C15585
REN. 02/25
STATE OF CALIFORNIA

tk1sc COLLABORATIVE
11870 Pierce Street, Suite 160
Riverside, California 92505
951.299.4160 www.tk1sc.com
Project Leader - Nikolas Bruno
Electrical Lead - Nikolas Bruno
tk1sc Job #: B2202744.000

REGISTERED PROFESSIONAL ENGINEER
RAYMOND W. SWARTZ
No. E15610
Ex. 12/31/2023
ELECTRICAL
STATE OF CALIFORNIA

HIGHLAND HIGH SCHOOL
50M POOL & AQUATICS CENTER

KERN HIGH SCHOOL DISTRICT

AV SINGLE LINE
AND DETAILS

T-4.0

OC Office: 24461 Ridge Route Drive #100, Laguna Hills, CA 92653 Phone: 949.496.6191 SD Office: 804 Pier View Way #103, Oceanside, CA 92054 Phone: 760.730.5527 LA Office: 837 Traction Avenue, #410, Los Angeles, CA 90013 Phone: 213.278.0172 Web: pjhm.com

8/2/2022 11:34:37 AM

SWIMMING POOL DATA

SURFACE AREA	=	12,369 SQ. FT.
PERIMETER	=	488 FT.
DEPTH	=	3-6" TO 12'-3"
VOLUME	=	691,976 GAL.
6 HR TURNOVER	=	1,922 GPM

NOTE:
A PORTABLE VACUUM CLEANING SYSTEM HAS BEEN PROVIDED FOR THE POOL. REFER TO SPECIFICATION SECTION 13 11 06, 2.2, A,B,C,D, AND H.

LEGEND

EJ	=	EXPANSION JOINT (5A SP.12, 5C SP.12)
CJ	=	CONTROL JOINT (5B SP.12)
TSD	=	TOP OF SLOT DRAIN (4 SP.12)
TCO	=	TOP OF CLEAN-OUT (4 SP.12)
AL	=	ACCESSIBLE LIFT (1 SP.8)
HB	=	HOSE BIBB (6 SP.12)
SCA	=	SURGE CHAMBER ACCESS COVER (2 SP.7)
TAD	=	TOP OF AREA DRAIN (8 SP.10)
CW	=	COLD WATER
SL	=	SLOPE DIRECTION
WL	=	WATERLEVEL
TAD	=	TOP OF AREA DRAIN
TFF	=	TOP OF FINISHED FLOOR
FS	=	FINISHED SURFACE
TD	=	TOP OF DECK
I.E.	=	INVERT ELEVATION
P.O.C.	=	POINT OF CONNECTION
SD	=	STORM DRAIN
(E)	=	EXISTING

NOTES:

1. COORDINATE SIGNAGE PLACEMENT AND COLOR SCHEME WITH OWNER PRIOR TO INSTALLATION. (7 SP.12)
2. DECKS SHALL HAVE 1% MIN. SLOPE AND 1.8% MAX. SLOPE TO DRAINS.
3. ALL POOL DECKING SHALL BE NON-SLIP AND NON-ABRASIVE MEDIUM BROOM FINISH WITH NATURAL GRAY CONCRETE UNLESS OTHERWISE NOTED.
4. REFER TO ARCHITECTURAL PLANS FOR LOCATIONS AND QUANTITY OF REQUIRED EXITS, DRINKING FOUNTAINS, AND SANITARY FIXTURES.
5. THE POOL CANNOT BE WITHOUT AN APPROVED POOL ENCLOSURE AT ANY TIME, INCLUDING DURING CONSTRUCTION AND INSTALLATION OF THE NEW POOL ENCLOSURE.
6. SEE SHEET A-0.2 WITH ALL REQUIRED EXIT SIGNS, ROOM SIGNS, ETC.

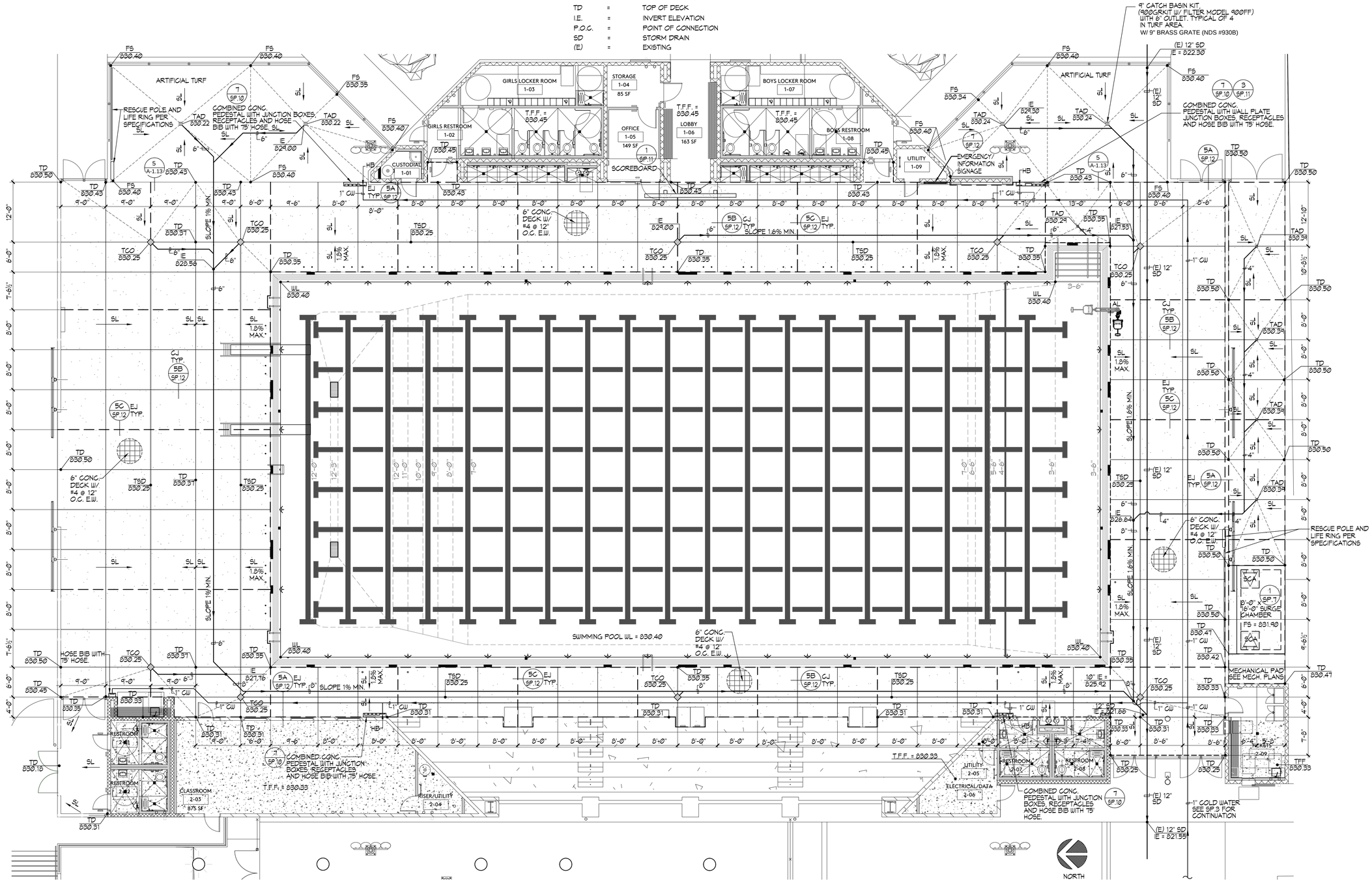

1 SWIMMING POOL DECK PLAN 1/8"=1'-0"

IDENTIFICATION STAMP
DIV. OF THE STATE ARCHITECT
APP: 03-122664 INC:
REVIEWED FOR
SS ☑ FLS ☑ ACS ☑
DATE: 05/12/2023

pjhm architects

LICENSED ARCHITECT THOMAS W. KRUSE NO. C15585 REN. 02/25 STATE OF CALIFORNIA

AQUATIC DESIGN GROUP
2226 Faraday Ave. Carlsbad, CA 92008
AquaticDesignGroup.com
760.438.8400

LICENSED ARCHITECT GEORY S. FERRELL C-35802 REN. 07/31/23 STATE OF CALIFORNIA

HIGHLAND HIGH SCHOOL
50M POOL & AQUATICS CENTER

KERN HIGH SCHOOL DISTRICT

SWIMMING POOL DECK PLAN

DP.1

OC Office: 24461 Ridge Route Drive #100, Laguna Hills, CA 92653 • OC Phone: 949.496.6191 • SD Office: 804 Pier View Way #103, Oceanside, CA 92054 • SD Phone: 760.730.5527 • LA Office: 837 Traction Avenue, #410, Los Angeles, CA 90013 • LA Phone: 213.278.0172 • Web: pjhm.com

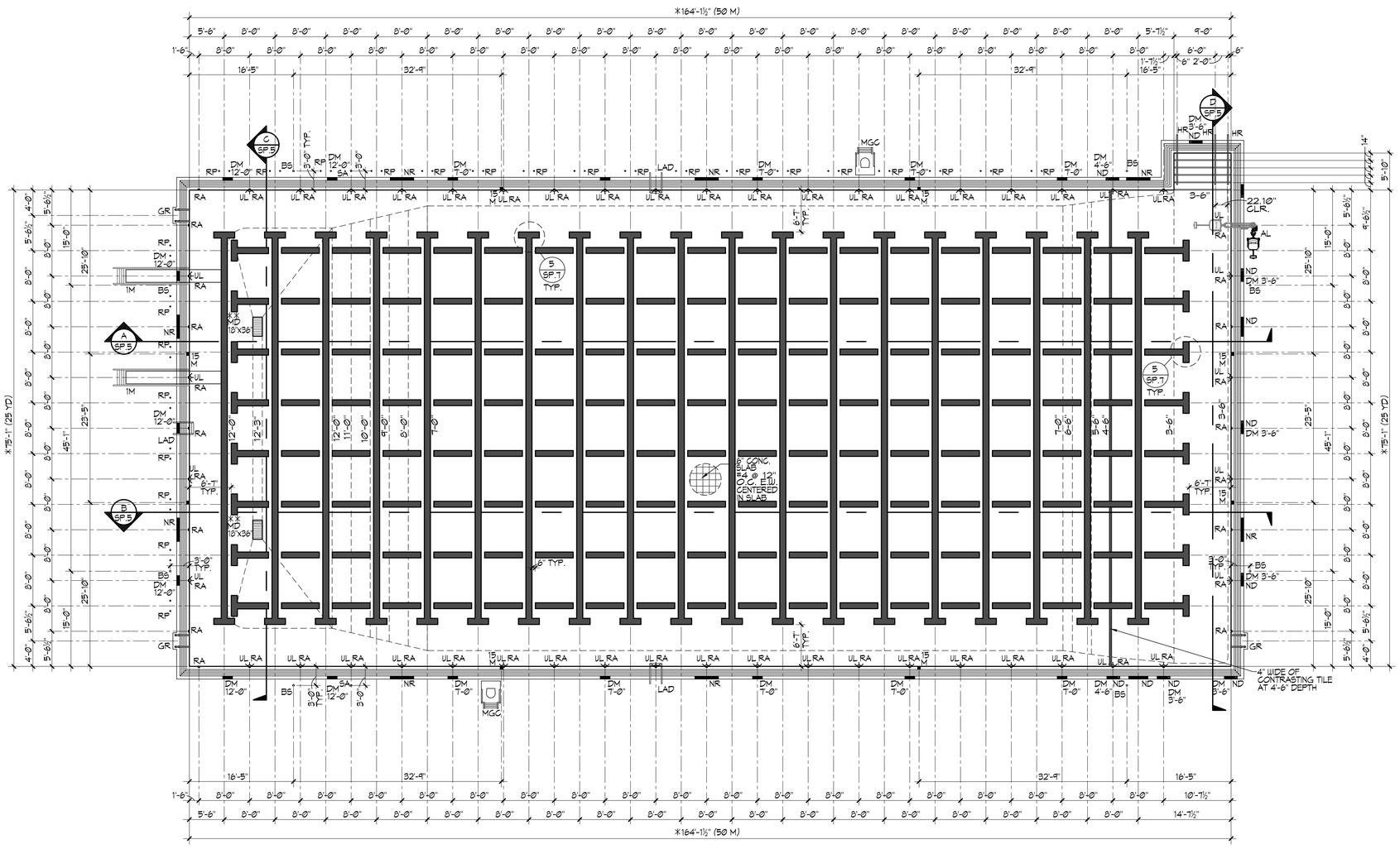

SWIMMING POOL DATA

SURFACE AREA	=	12,369 SQ. FT.
PERIMETER	=	488 FT.
DEPTH	=	3'-6" TO 12'-3"
VOLUME	=	691,976 GALLONS
6 HR TURNOVER	=	1,922 GPM

LEGEND

** MD	=	MAIN DRAIN	6 SP.9
GR	=	GRABRAIL	1 SP.9
DM	=	DEPTH MARKER	6 SP.7
NR	=	'NO RUNNING'	7 SP.7
ND	=	'NO DIVING'	7,8 SP.7
RA	=	ROPE ANCHOR	3 SP.9
RP	=	RACING PLATFORM	7 SP.8
BS	=	BACKSTROKE STANCHION	3 SP.8
MGC	=	MOVEABLE GUARD CHAIR	5 SP.8
UL	=	UNDERWATER LIGHT	2 SP.11
AL	=	ACCESSIBLE LIFT	1 SP.8
HR	=	HANDRAIL	4 SP.8
15M	=	15 METER MARKER	7 SP.6
1M	=	ONE METER DIVE STAND	2 SP.9
LAD	=	LADDER	4 SP.9
SA	=	STANCHION ANCHOR	3 SP.8

CERTIFICATION REQUIREMENTS

* THE CONTRACTOR SHALL RETAIN AN INDEPENDENT LICENSED SURVEYOR TO PROVIDE PROOF OF COMPLIANCE FOR REQUIRED POOL LENGTHS AS FOLLOWS: (RECOMMEND PATRELL ENG. GROUP (626) 395-4362)

LONG COURSE-50M: (ALLOWS FOR TOUCH PADS AT BOTH ENDS) 164'-1⅛" MIN.; 164'-11⅛" MAX.

SHORT COURSE-25YDS: (ALLOWS FOR TOUCH PADS AT ONE END) 75'-0 3/16" MIN.; 75'-1 3/16" MAX.

TOLERANCE AGAINST LENGTH SHALL EXTEND IN A VERTICAL PLANE @ 3M (12') ABOVE AND @ 0.6M. (2'-7½") BELOW THE SURFACE OF THE WATER AT ALL POINTS OF BOTH END WALLS TYP. OF ALL COURSES.

THE INDEPENDENT LICENSED SURVEYOR SHALL FILL OUT, NOTARIZE AND FILE OFFICIAL CERTIFICATION FORM(S) WITH USA SWIMMING.

** CONTRACTOR SHALL RETAIN A LICENSED ENGINEER TO CERTIFY THE FIELD BUILT MAIN DRAIN SYSTEMS AS V.G.B. COMPLIANT.

POOL DESIGN CRITERIA

POOL DESIGN CODES

CALIFORNIA BUILDING CODE 2019
ASCE 7-16

POOL DESIGN CRITERIA

PER GEOTECHNICAL REPORT BY: SOILS ENGINEERING, INC., DATED AUGUST 5, 2022 SEI FILE 22-18353

UNDRAINED CONDITIONS:

ACTIVE PRESSURE:	50 pcf	DRAINED CONDITION
AT-REST PRESSURE:	60 pcf	DRAINED CONDITION
APPROX. SOIL UNIT WT.:	110 pcf	
BEARING PRESSURE:	2500 psf	
PASSIVE PRESSURE:	300 pcf	(FOR PIER FOOTINGS: 150 pcf + 1/3 INCREASE FOR WIND/SEISMIC)
COEFF. OF FRICTION:	0.30	
SEISMIC PRESSURE:	13 H² @ 0.6H NPER SEI EMAIL RESPONSE	

SURCHARGE AT DECK

1) ASSUME 50% OF VERTICALLY APPLIED SURCHARGE TO ACT AS HORIZONTAL UNIFORM LOAD ON POOL WALL.
2) DL = WEIGHT OF 8" MAX. CONCRETE DECK SLAB ABOVE.
3) LL DESIGN CASE = POOL EMPTY DURING CONSTRUCTION OR FOR SHORT TERM MAINTENANCE. NO 100 psf LL FOR FULL CROWD OPERATING CONDITION WHEN EMPTY.

CONCRETE DESIGN

f'c = 4,000 psi MIN.
fy = 60 ksi

NOTE:

1. HYDROSTATIC PRESSURE RELIEF VALVES ARE PROVIDED IN POOL FLOOR SLABS TO ESTABLISH A "DRAINED CONDITION" (WHEN THE POOL IS EMPTY) IN THE PRESENCE OF A GROUND WATER TABLE, A PERCHED GROUND WATER CONDITION, OR POOR SITE DRAINAGE.

1 **SWIMMING POOL LAYOUT PLAN (SWIMMING)** ⅛"=1'-0"

IDENTIFICATION STAMP
DIV. OF THE STATE ARCHITECT
APP: 03-122664 INC:
REVIEWED FOR
SS ☑ FLS ☑ ACS ☑
DATE: 05/12/2023

pjhm architects
LICENSED ARCHITECT RICHARD W. RIMMER No. C35385 REN. 02/25 STATE OF CALIFORNIA
AQUATIC DESIGN GROUP
2226 Faraday Ave, Carlsbad, CA 92008
AquaticDesignGroup.com
760.438.8400
LICENSED ARCHITECT GREGORY S. [illegible] C35802 REN. 07/31/23 STATE OF CALIFORNIA
OC Office: 24461 Ridge Route Drive #100, Laguna Hills, CA 92653 • OC Phone: 949.496.6191 • SD Office: 804 Pier View Way #103, Oceanside, CA 92054 • SD Phone: 760.730.5527 • LA Office: 837 Traction Avenue, #410, Los Angeles, CA 90013 • LA Phone: 213.278.0172 • Web: pjhm.com

HIGHLAND HIGH SCHOOL
50M POOL & AQUATICS CENTER
KERN HIGH SCHOOL DISTRICT

SWIMMING POOL LAYOUT PLAN (SWIMMING)

SP.1

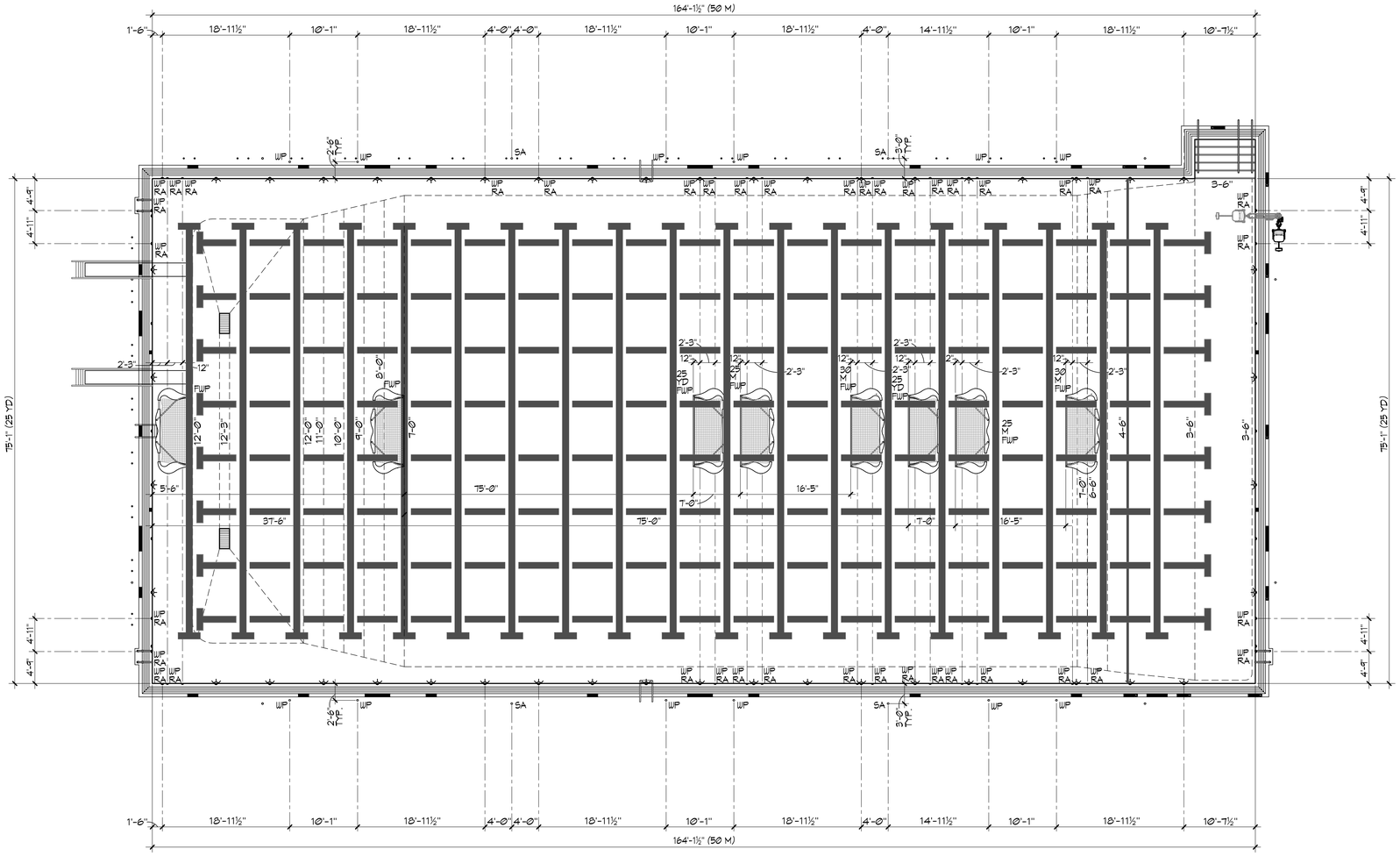

SWIMMING POOL DATA

SURFACE AREA	=	12,369 SQ. FT.
PERIMETER	=	488 FT.
DEPTH	=	3'-6" TO 12'-3"
VOLUME	=	691,976 GALLONS
6 HR TURNOVER	=	1,922 GPM

LEGEND

SA	=	STANCHION ANCHOR	3 / SP.8
FWP	=	FLOATING WATERPOLO	6 / SP.8
WP	=	WATERPOLO (STATIONARY)	2 / SP.8
RA	=	ROPE ANCHOR	3 / SP.9

NORTH

1 **SWIMMING POOL LAYOUT PLAN (WATERPOLO)** 1/8"=1'-0"

IDENTIFICATION STAMP
DIV. OF THE STATE ARCHITECT
APP: 03-122664 INC:
REVIEWED FOR
SS ☑ FLS ☑ ACS ☑
DATE: 05/12/2023

pjhm architects

LICENSED ARCHITECT
RICHARD W. RIDDELL
No. C35385
REN. 02/25
STATE OF CALIFORNIA

AQUATIC DESIGN GROUP
2226 Faraday Ave, Carlsbad, CA 92008
AquaticDesignGroup.com
760.438.8400

LICENSED ARCHITECT
JEREMY S. [illegible]
C35802
REN. 07/31/23
STATE OF CALIFORNIA

HIGHLAND HIGH SCHOOL
50M POOL & AQUATICS CENTER

KERN HIGH SCHOOL DISTRICT

SWIMMING POOL LAYOUT PLAN (WATERPOLO)

SP.2

OC Office: 24461 Ridge Route Drive #100, Laguna Hills, CA 92653 • OC Phone: 949.496.6191 • SD Office: 804 Pier View Way #103, Oceanside, CA 92054 • SD Phone: 760.730.5527 • LA Office: 837 Traction Avenue, #410, Los Angeles, CA 90013 • LA Phone: 213.278.0172 • Web: pjhm.com

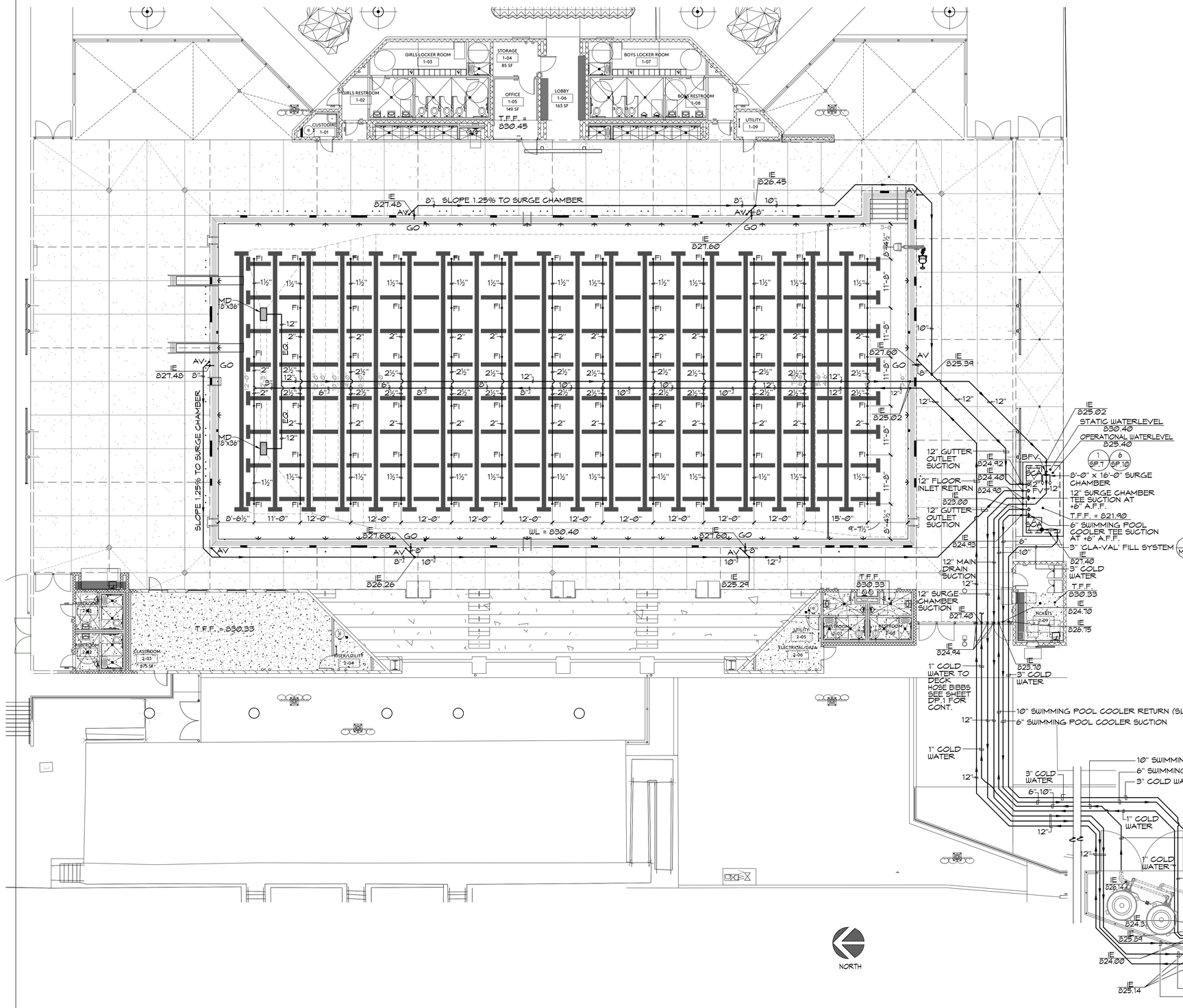

1 **SWIMMING POOL PIPING PLAN** 1"=10'-0"

SWIMMING POOL DATA

SURFACE AREA	=	12,369 SQ. FT.
PERIMETER	=	488 FT.
DEPTH	=	3'-6" TO 12'-3"
VOLUME	=	691,976 GALLONS
6 HR TURNOVER	=	1,922 GPM

SWIMMING POOL SURGE DATA

REQUIRED SURGE CAPACITY	=	12,369 GAL.
SURGE IN PERIMETER GUTTER	=	5,482 GAL.
SURGE IN GUTTER PIPING	=	1,842 GAL.
8' X 16' SURGE IN SURGE CHAMBER	=	5,272 GAL.
TOTAL SUPPLIED SURGE	=	12,596 GAL.

∴ 12,597 GAL. >12,369 GAL. + 2% OK

LEGEND

MD	=	MAIN DRAIN — 6 / SP.9
FI	=	FLOOR INLET — 2 / SP.10
GO	=	GUTTER OUTLET — 1 / SP.10
AV	=	AIR VENT — 5 / SP.9
SCA	=	SURGE CHAMBER ACCESS — 2 / SP.7
BFV	=	BUTTERFLY VALVE — 4 / SP.10
FV	=	FLOAT VALVE
A.F.F.	=	ABOVE FINISH FLOOR
WL	=	WATERLEVEL
T.F.F.	=	TOP OF FINISHED FLOOR
IE	=	INVERT ELEVATION

5 / SP.10

NOTES:

1. PIPING ROUTES ARE SCHEMATIC IN NATURE AND SHOWN ON PLANS FOR CLARITY. CONTRACTOR SHALL ROUTE PIPING ACCORDINGLY TO MEET NOTED INVERT ELEVATIONS. REFER TO REFERENCED DETAIL FOR PIPE SPACING REQUIREMENTS.
2. ALL BELOW GRADE POOL PIPING SHALL BE SCHEDULE 40 PVC AND ALL ABOVE GRADE POOL PIPING SHALL BE SCHEDULE 80 PVC.
3. COORDINATE ALL PIPING WITH SITE AND BUILDING UTILITIES INCLUDING PIPING, CONDUITS / STRUCTURES AND THE LIKE. COORDINATE ROUTING OF PIPING THROUGH STRUCTURAL SLAB. ALL PIPING SHALL HAVE UNIFORM SLOPE IN ONE DIRECTION.
4. SURGE CHAMBER TEE SUCTION SHALL BE SET AT +6" A.F.F. MAINTAIN MAXIMUM SEPARATION BETWEEN SUCTION AND INFLUENT PIPING WITHIN THE SURGE CHAMBER.
5. EACH MAIN DRAIN SHALL BE EQUIPPED WITH HYDROSTATIC RELIEF VALVE PER RECOMMENDATIONS OF GEOTECHNICAL REPORT

IDENTIFICATION STAMP
DIV. OF THE STATE ARCHITECT
APP: 03-122664 INC:
REVIEWED FOR
SS ☑ FLS ☑ ACS ☑
DATE: 05/12/2023

pjhm architects
LA Phone: 213.278.0172 • Web: pjhm.com
LICENSED ARCHITECT RICHARD W. RANDALL No. C35585 REN. 02/25 STATE OF CALIFORNIA
AQUATIC DESIGN GROUP
2226 Faraday Ave, Carlsbad, CA 92008
AquaticDesignGroup.com
760.438.8400
LICENSED ARCHITECT JEFFERY S. [illegible] C35802 REN. 07/31/23 STATE OF CALIFORNIA
LA Office: 837 Traction Avenue, #410, Los Angeles, CA 90013 • SD Phone: 760.730.5527
OC Office: 24461 Ridge Route Drive #100, Laguna Hills, CA 92653 • OC Phone: 949.496.6191 • SD Office: 804 Pier View Way #103, Oceanside, CA 92054

HIGHLAND HIGH SCHOOL
50M POOL & AQUATICS CENTER

KERN HIGH SCHOOL DISTRICT

SWIMMING POOL PIPING PLAN

SP.3

LEGEND

UL	=	UNDERWATER LIGHT
JB	=	JUNCTION BOX
RP	=	RACING PLATFORM
WP	=	WALL PLATE
DP	=	DECK PLATE

KEY NOTES

		QUANTITY	UNIT
⧗	ETHERNET DROP-BY OTHERS	4	COUNT
F4	WALL PLATE FIBER CONNECTION	1	COUNT
5	WALL PLATE SCOREBOARD NODE	4	COUNT
6	WALL PLATE TIMER NODE	5	COUNT
D	TIMING DECK NODE (4'x4'x6" PVC BOX)	25	COUNT
2	START DECK NODE (4'x4'x6" PVC BOX)	3	COUNT
5	SCOREBOARD DECK NODE (4'x4'x6" PVC BOX)	3	COUNT
6	TITANIUM TIMER CONNECT DECK PLATE (4'x4'x6" PVC BOX)	5	COUNT
F	TIMING SYSTEM WALL INTERFACE W/PI W/ 12"x12"x6" PVC BOX	3	COUNT
4	CABLE HARNESS CONNECTION NODE	1	COUNT

TIMING SYSTEM NOTES/EQUIPMENT

NOTE: THE CONTRACTOR SHALL SUPPLY AND INSTALL DECK PLATE BOXES, WALL PLATE BOXES, WALL PLATE JUNCTION BOXES, CONDUIT, WIRING, SCOREBOARD AND ALL TIMING EQUIPMENT AS SHOWN FOR THE 'COLORADO' TIME SYSTEM OR EQUAL.

TIMING SYSTEM

QTY	MODEL	DESCRIPTION
1	GENT-TMR	INTUITIVE SOFTWARE INTERFACE WITH MODERN WINDOWS USER INTERFACE AND TOUCHSCREEN FRIENDLY. FLEXIBLE USER INTERFACE OPTIONS WITH ETHERNET CONNECTIVITY TO THE TIMER. ADVANCED DIAGNOSTICS, INTELLIGENT BUS SYSTEM, ROBUST SAFEGUARDS. TIMER WILL CONTINUE TO RUN AND FINISH RACE WITHOUT USER INTERFACE. WET-PLUGGABLE TITANIUM CONNECTIONS. INTEGRATED 2.4 GHz WIRELESS TO SCOREBOARDS, FACILITY NETWORK CONNECTIVITY.
1	R-600-302	GENT LAPTOP

START SYSTEM

QTY	MODEL	DESCRIPTION
2	SS	CHAMPION SERIES START SYSTEM WITH WIRED MICROPHONE, VOLUME CONTROL ON EACH MICROPHONE INPUT, EXTERNAL CONNECTIONS FOR ADDITIONAL STROBE LIGHTS, LED BATTERY INDICATION LIGHT, AC/DC POWER CAPABILITIES AND AN EXTERNAL 360° STROBE. TRIPOD OR TABLE TOP OPTIONS.
2	START-FPM-2	FLAG POLE MOUNTING KIT FOR STARTER
17	SP-6/45	6 WATT INDIVIDUAL BLOCK SPEAKER

TOUCHPADS

QTY	MODEL	DESCRIPTION
18	TP-RDG	AQUAGRIP GUTTERHUNG TOUCHPADS (90° x 22") US PATENT 5,702,799
2	CAD-TP96	TOUCHPAD CADDY FOR GUTTERHUNG TOUCHPADS. HOLDS UP TO TEN TOUCHPADS. SOME ASSEMBLY REQUIRED.
18	4000-0040	SPECIAL SIZE TOUCHPAD BRACKETS

GENT TOUCHPAD SYSTEM

QTY	MODEL	DESCRIPTION
1	TP-GENT-10	TEN-LANE TOUCHPAD SYSTEM FOR THE GEN 2 TIMING SYSTEM (SERIAL) INCLUDES AN TEN-LANE CABLE HARNESS, ONE PUSHBUTTON PER LANE+ ONE SPARE, VACUUM PUMP, AND TOUCHPAD METER.

GENT CABLE

QTY	MODEL	DESCRIPTION
1	R-015-100-S	SCOREBOARD CABLE, 8 METER
1	R-015-115-S	TIMER CABLE, 8 METER
1	R-015-106-S	STARTER CABLE, 8 METER
1	R-015-115-15	TIMER CABLE, 15 METER

GENT IN DECK

QTY	MODEL	DESCRIPTION
D 25	TDPI-D	TITANIUM DOMED DECK PLATE-INTELLIGENT TITANIUM DECK PLATES REQUIRE A 4" SQUARE OR 4.125" DIAMETER CIRCULAR OPENING AT A MINIMUM. WRITTEN VERIFICATION AND SIGN OFF REQUIRED FROM CUSTOMER. NOTE: INCLUDES 5 YEAR WARRANTY. GTS IS THE ONLY MANUFACTURER OF TITANIUM DECK PLATE.
2 2	TDPI-S2	START DECK NODE
5 3	TDPI-SCS	SCOREBOARD DECK NODE
F 3	R-1004-054R	GENT WALL PLATE (15X15)
1	TDPI-K1	KIT-SCOREBOARD BUS HEAD & TAIL NODE INSTALLATION
1	TDPI-K1	KIT-TIMING BUS HEAD & TAIL NODE INSTALLATION
1	WPI-F4	WP-YDS FIBER & LEGACY CONNECT
6 5	TDPI-T1	TIMER DECK NODE

GENT CABLE

QTY	MODEL	DESCRIPTION
1200'	R-015-TST	TIMING BUS CABLE- 7 CONDUCTOR
1200'	R-015-126	SCOREBOARD BUS CABLE- 4 CONDUCTOR

PACE CLOCK

QTY	MODEL	DESCRIPTION
1	PC-PRO-R	PACE CLOCK - PRO/WATER POLO SHOT CLOCK
1	DC-1500	SPECIFICATIONS: • 4 DIGIT PACE CLOCK • 10" RED DIGITS - VIEWABLE UP TO 400 FEET • HIGH INTENSITY LED - INDOOR/OUTDOOR • "SPLASH-PROOF" PROTECTIVE LENS • INTERNAL RECHARGEABLE BATTERY • INTERNAL HORN • FEET AND HANDLE
1 PC-PRO AND 1 DC 1500 DECK CLOCKS PER OWNER APPROVAL		FUNCTIONS: • SIMPLE PACE CLOCK • CUMULATIVE SPLIT DISPLAY • LAP SPLIT DISPLAY • LAP COUNTER • LAP SPLIT DISPLAY WITH TURN SPEED • RELAY EXCHANGES DISPLAY • START REACTION DISPLAY • HAND TURN SPEED • BREAK OUT SPEED DISPLAY • BREAK OUT SPEED DISPLAY WITH START REACTION • TIME DISPLAY FOR REPETITIVE SETS • SINGLE LANE TIMER • MID-RACE TIMING DISPLAY • WATERPOLO SHOT CLOCK • WATERPOLO GAME CLOCK

NOTE: MOST FUNCTIONS REQUIRE ADDITIONAL INPUT DEVICES, I.E. TOUCHPAD, RELAY JUDGING PLATFORM, START SYSTEM, PUSHBUTTON

CONTROLLER

QTY	MODEL	DESCRIPTION
1	WTTC-2	WIRELESS TABLE TOP CONTROLLER
1	CASE-WTTC	CASE FOR THE WIRELESS TABLE TOP CONTROLLER
1	WHC-1	WIRELESS HANDHELD CONTROLLER

ADAPTER

QTY	MODEL	DESCRIPTION
1	WA-3	WIRELESS ADAPTER, 2.4 GHz

RELAY JUDGING PLATFORM

QTY	MODEL	DESCRIPTION
16	RJPL-24X32	CTS RELAY JUDGING PLATFORM 24'X32' W/ BUILT-N LED LIGHT FOR START
1	CAD-RJPL-2	CADDY- 24' WIDTH RELAY JUDGING PLATFORMS (HOLDS 16)

FULL COLOR VIDEO DISPLAY

QTY	MODEL	DESCRIPTION
4 1	SCOREBOARD	(A) PROVIDE LED MATRIX DISPLAY SCOREBOARD INCLUDING ALL POWER REQUIREMENTS, BONDING AND STRUCTURAL SUPPORTS. THE SCOREBOARD SHALL HAVE FULL COLOR AND VIDEO CAPABILITIES. Y3C 12mm 256H x 448W SMD, FA, OD 2PM DISPLAY ACTIVE AREA: 120.4(H) x 211.7(W)

(5) PROVIDE TEN (10) DEDICATED 20 AMP CIRCUIT TO BE TERMINATED INTO SCOREBOARD LOAD CENTER

(6) MASTER ON/OFF SCOREBOARD SWITCH WITH PILOT LIGHT W/ LOCKABLE ENCLOSURE.

(7) SCOREBOARD DATA CONNECTION BOX CONNECT TO TIMING/WALL BOX LOCATION W/ 1" PVC CONDUIT.

NON-ILLUMINATED FACILITY IDENTIFICATION PANEL WITH ARTWORK.

ID PANEL

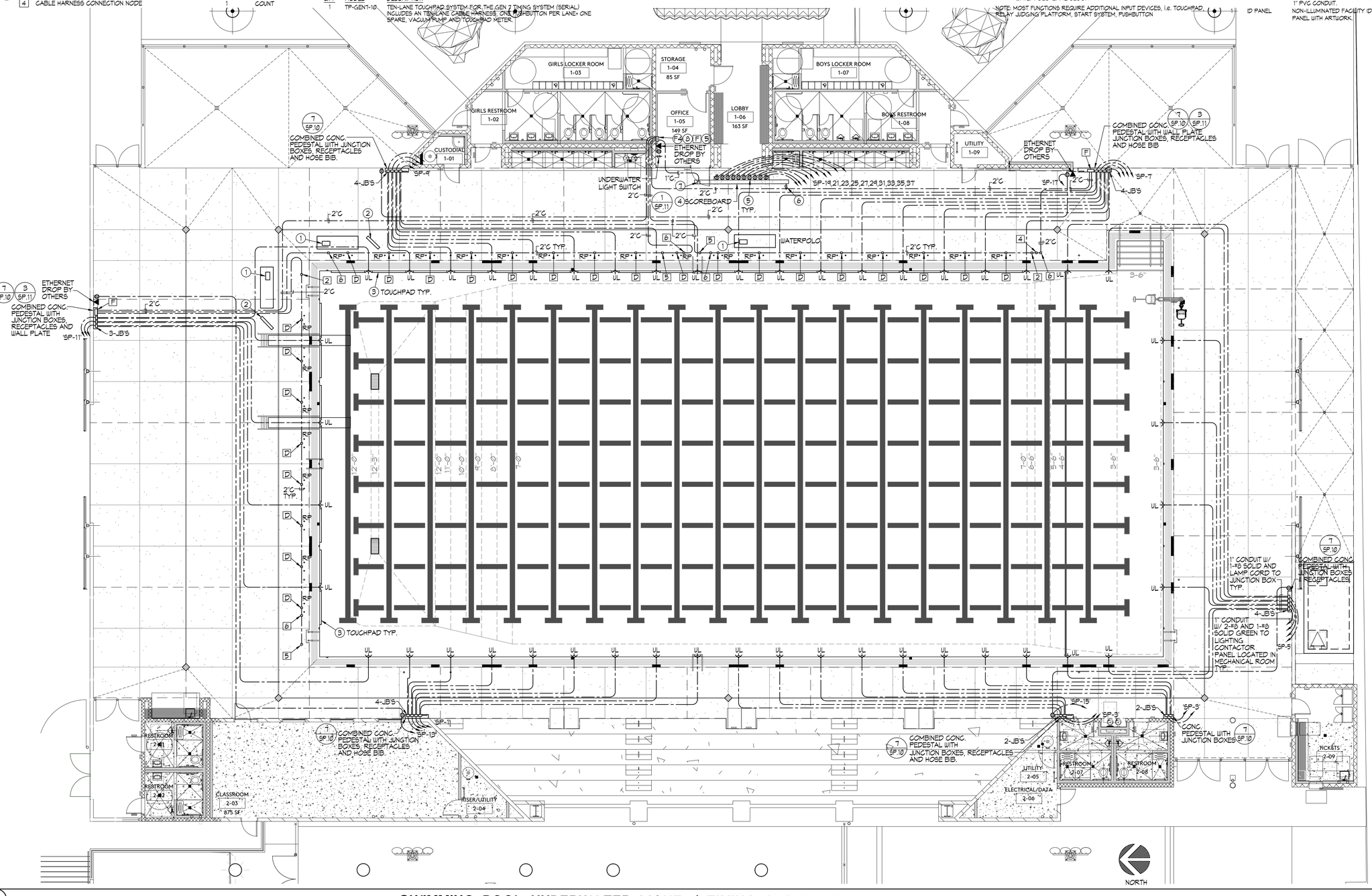

1 SWIMMING POOL UNDERWATER LIGHT / TIMING SYSTEM PLAN 1/8"=1'-0"

IDENTIFICATION STAMP
DIV. OF THE STATE ARCHITECT
APP: 03-122664 INC:
REVIEWED FOR
SS ☑ FLS ☑ ACS ☑
DATE: 05/12/2023

pjhm architects

LICENSED ARCHITECT RICHARD W. RANSOM No. C35585 REN. 02/25 STATE OF CALIFORNIA

AQUATIC DESIGN GROUP
2226 Faraday Ave, Carlsbad, CA 92008
AquaticDesignGroup.com
760.438.8400

LICENSED ARCHITECT JERRY S. CASSIDY C35802 REN. 07/31/23 STATE OF CALIFORNIA

pjhm architects
LA Office: 837 Traction Avenue, #410, Los Angeles, CA 90013 • LA Phone: 213.278.0172 • Web: pjhm.com
SD Office: 804 Pier View Way #103, Oceanside, CA 92054 • SD Phone: 760.730.5527
OC Office: 24461 Ridge Route Drive #100, Laguna Hills, CA 92653 • OC Phone: 949.496.6191

HIGHLAND HIGH SCHOOL
50M POOL & AQUATICS CENTER

KERN HIGH SCHOOL DISTRICT

SWIMMING POOL UNDERWATER LIGHT / TIMING SYSTEM PLAN

SP.4

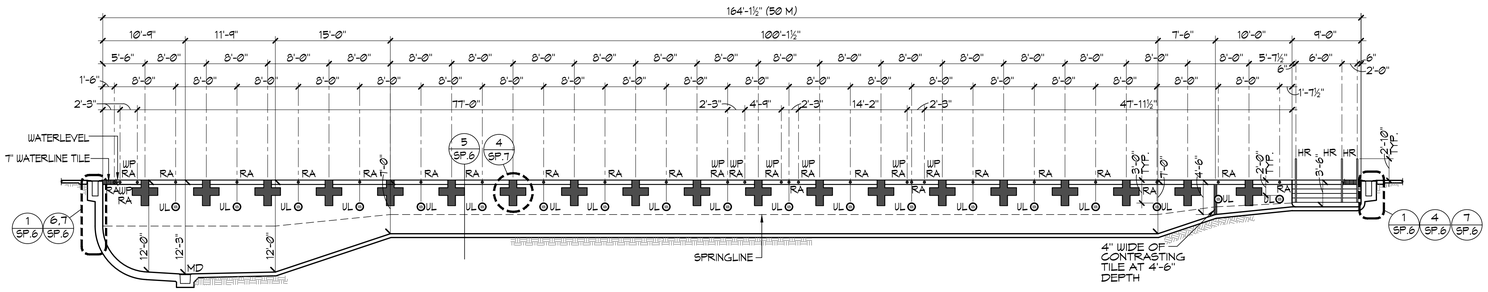

A SWIMMING POOL SECTION ⅛"=1'-0"

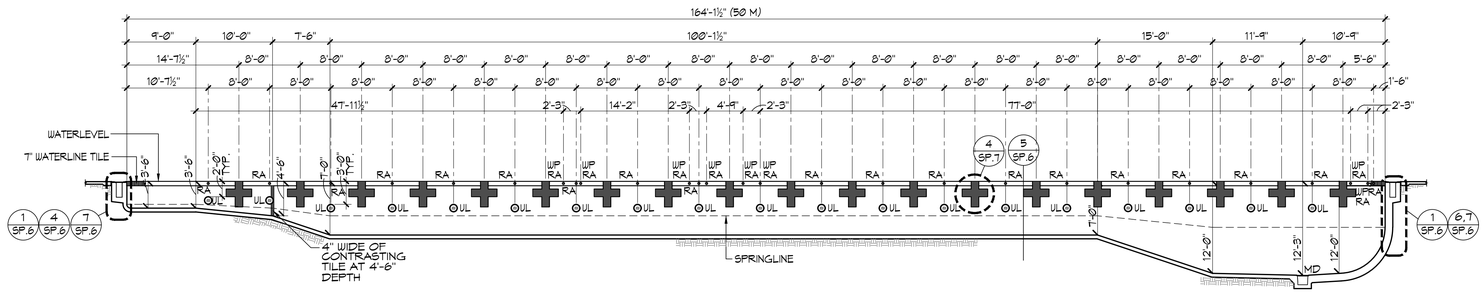

B SWIMMING POOL SECTION ⅛"=1'-0"

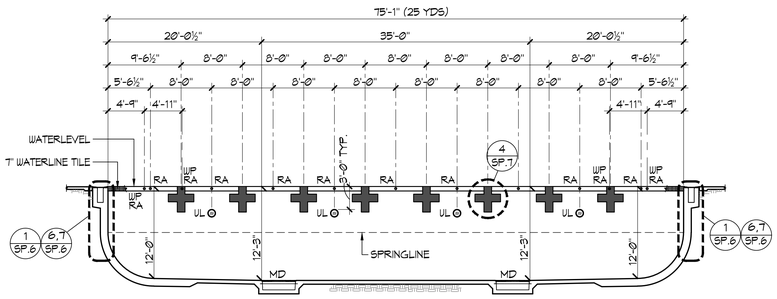

C SWIMMING POOL SECTION ⅛"=1'-0"

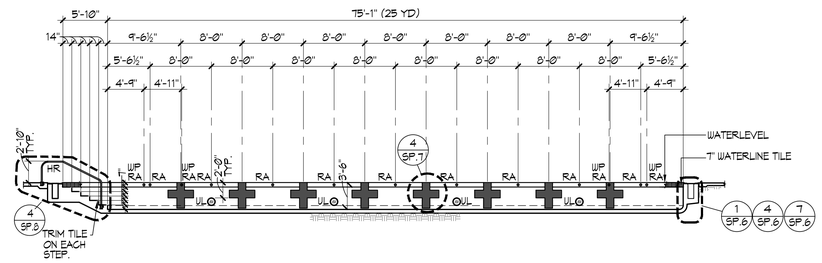

D SWIMMING POOL SECTION ⅛"=1'-0"

IDENTIFICATION STAMP
DIV. OF THE STATE ARCHITECT
APP: 03-122664 INC:
REVIEWED FOR
SS ☑ FLS ☑ ACS ☑
DATE: 05/12/2023

pjhm architects

LICENSED ARCHITECT
THOMAS W. KRUSE
NO. C15585
REN. 02/25
STATE OF CALIFORNIA

AQUATIC DESIGN GROUP
2226 Faraday Ave. Carlsbad, CA 92008
AquaticDesignGroup.com
760.438.8400

LICENSED ARCHITECT
GEORGY S. FERRELL
C-35802
REN. 07/31/23
STATE OF CALIFORNIA

HIGHLAND HIGH SCHOOL
50M POOL & AQUATICS CENTER

KERN HIGH SCHOOL DISTRICT

SWIMMING POOL SECTIONS

SP.5

OC Office: 24461 Ridge Route Drive #100, Laguna Hills, CA 92653 • OC Phone: 949.496.6191 • SD Office: 804 Pier View Way #103, Oceanside, CA 92054 • SD Phone: 760.730.5527 • LA Office: 837 Traction Avenue, #410, Los Angeles, CA 90013 • LA Phone: 213.278.0172 • Web: pjhm.com

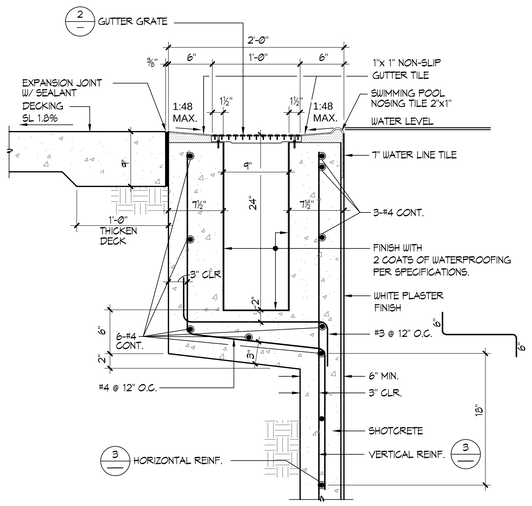

1 **RIM FLOW GUTTER** 1½"=1'-0"

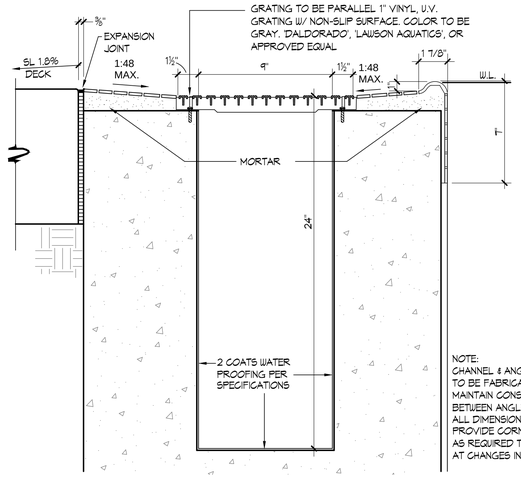

2 **RIM FLOW GUTTER/GRATE** 3"=1'-0"

REINFORCEMENT TABLE

WATER DEPTH	"t"	"ds"	RADIUS	VERTICAL REINF.	HORIZONTAL REINF.	TRANSITION TO FLOOR REINF. BEYOND END RADIUS
3'-6"	6"	3"	6"	#4 @ 12" O.C.	#4 @ 12" O.C.	24"
3'-7" TO 5'-0"	7"	4"	6" TO 18"	#4 @ 12" O.C.	#4 @ 12" O.C.	24"
5'-1" TO 7'-0"	8"	5"	18" TO 2'-6"	#4 @ 6" O.C.	#4 @ 12" O.C.	24"
7'-1" TO 10'-0"	11"	8"	2'-6" TO 5'-0"	#5 @ 6" O.C.	#4 @ 8" O.C.	24"
10'-1" TO 12'-3"	13"	10"	5'-0" TO 6'-0"	#5 @ 4" O.C. REAR FACE #4 @ 12" O.C. FRONT FACE	#4 @ 12" O.C. REAR FACE #4 @ 12" O.C. FRONT FACE	24"

CONCRETE NOTES:

1. THE MINIMUM ULTIMATE COMPRESSIVE STRENGTH AT 28 DAYS WITH A Ø.40-0.45 MAX. WATER/CEMENT RATIO
   POOL FLOOR = 4000 PSI
   SLAB-ON-GRADE = 4000 PSI (POOL DECKS)
2. CONTINUOUS INSPECTION BY AN APPROVED INSPECTOR IS REQUIRED OF ALL CONCRETE PLACEMENT.
3. ALL CEMENT USED SHALL CONFORM TO A.S.T.M. C-150 TYPE II
4. FINE AND COARSE AGGREGATE SHALL CONFORM TO A.S.T.M. C-33. MAXIMUM SIZE OF AGGREGATE TO BE 1".
5. CONCRETE MIX DESIGNS SHALL BE BASED UPON ACI-318 SECTIONS 19.3.2 AND 26.4.2.
6. CONCRETE SHALL BE TESTED AND INSPECTED PER SECTION CBC 1705A.3 AND 1905A.1.15.
7. REMOVAL OF FORMS SHALL COMPLY WITH ACI-318 SECTION 26.11.2.
8. ALL REINFORCING SHALL BE ASTM A-615, GRADE 60, UNLESS OTHERWISE NOTED. LAPS SHALL BE 64 BAR DIA.

SHOTCRETE NOTES:

1. SHOTCRETE SHALL HAVE A MINIMUM COMPRESSIVE STRENGTH OF 4,000 PSI AT 28 DAYS. SHOTCRETE MATERIAL SHALL HAVE A WATER/CEMENT RATIO OF Ø.40-Ø.45 PER ACI 506R, PART 2, PRODUCTS, SECTION 2.5.3.3, WET-MIX PROCESS.
2. CONTINUOUS INSPECTION BY AN D.S.A. APPROVED INSPECTOR IS REQUIRED OF ALL SHOTCRETE PLACEMENT.
3. ALL CEMENT USED SHALL CONFORM TO A.S.T.M. C-150 TYPE II
4. FINE AND COARSE AGGREGATE SHALL CONFORM TO A.S.T.M. C-33, AND SHALL CONFORM TO COARSE AGGREGATE GRADING NO. 2 PER ACI 506R TABLE 1.1.1. MAXIMUM SIZE OF AGGREGATE TO BE ⅜".
5. SHOTCRETE MIX DESIGNS SHALL BE PER CBC SECTION 1908A.2.
6. SHOTCRETE SHALL BE TESTED AND INSPECTED PER CBC SECTION 1908A.10 AND 1705A.3.
7. ANCHOR BOLTS, ANCHORS, DOUELS, INSERTS, ETC. SHALL BE SECURELY TIED IN PLACE PRIOR TO PLACING OF SHOTCRETE.
8. ALL REINFORCEMENT WITHIN SHOTCRETE SHALL MAINTAIN MINIMUM 2" CLEAR NON-CONTACT SPLICES.
9. THE FILM OF LAITANCE WHICH FORMS ON THE SURFACE OF THE SHOTCRETE SHALL BE REMOVED WITHIN APPROXIMATELY TWO HOURS AFTER APPLICATION BY BRUSHING WITH A STIFF BROOM. IF THIS IS NOT REMOVED WITHIN TWO HOURS, IT SHALL BE REMOVED BY THOROUGH WIRE BRUSHING OR SAND BLASTING. CONSTRUCTION JOINTS OVER EIGHT HOURS OLD SHALL BE THOROUGHLY CLEANED WITH AIR AND WATER PRIOR TO RECEIVING SHOTCRETE.
10. ALL REINFORCING SHALL BE ASTM A-615, GRADE 60, UNLESS OTHERWISE NOTED. LAPS SHALL BE 64 BAR DIA.

3 **REINFORCEMENT TABLE**

4 **POOL WALL 3'-6" TO 5'-0"** ¾" = 1'-0"

5 **POOL WALL 5'-1" TO 10'-0"** ¾"=1'-0"

6 **POOL WALL 10'-1" TO 12'-3"** ½" = 1'-0"

7 **TYPICAL RIM FLOW GUTTER PERSPECTIVE** NO SCALE

IDENTIFICATION STAMP
DIV. OF THE STATE ARCHITECT
APP: 03-122664 INC:
REVIEWED FOR
SS ☑ FLS ☑ ACS ☑
DATE: 05/12/2023

pjhm architects

LICENSED ARCHITECT
JAMES W. ARUNE
No. C15585
REN. 02/25
STATE OF CALIFORNIA

AQUATIC DESIGN GROUP
2226 Faraday Ave. Carlsbad, CA 92008
AquaticDesignGroup.com
760.438.8400

LICENSED ARCHITECT
JEFFREY S. [illegible]
C-35802
REN. 07/31/23
STATE OF CALIFORNIA

HIGHLAND HIGH SCHOOL
50M POOL & AQUATICS CENTER

KERN HIGH SCHOOL DISTRICT

DETAILS

SP.6

pjhm.com • Web:
LA Phone: 213.278.0172 • LA Office: 837 Traction Avenue, #410, Los Angeles, CA 90013 • SD Phone: 760.730.5527 • SD Office: 804 Pier View Way #103, Oceanside, CA 92054 • OC Phone: 949.496.6191 • OC Office: 24461 Ridge Route Drive #100, Laguna Hills, CA 92653

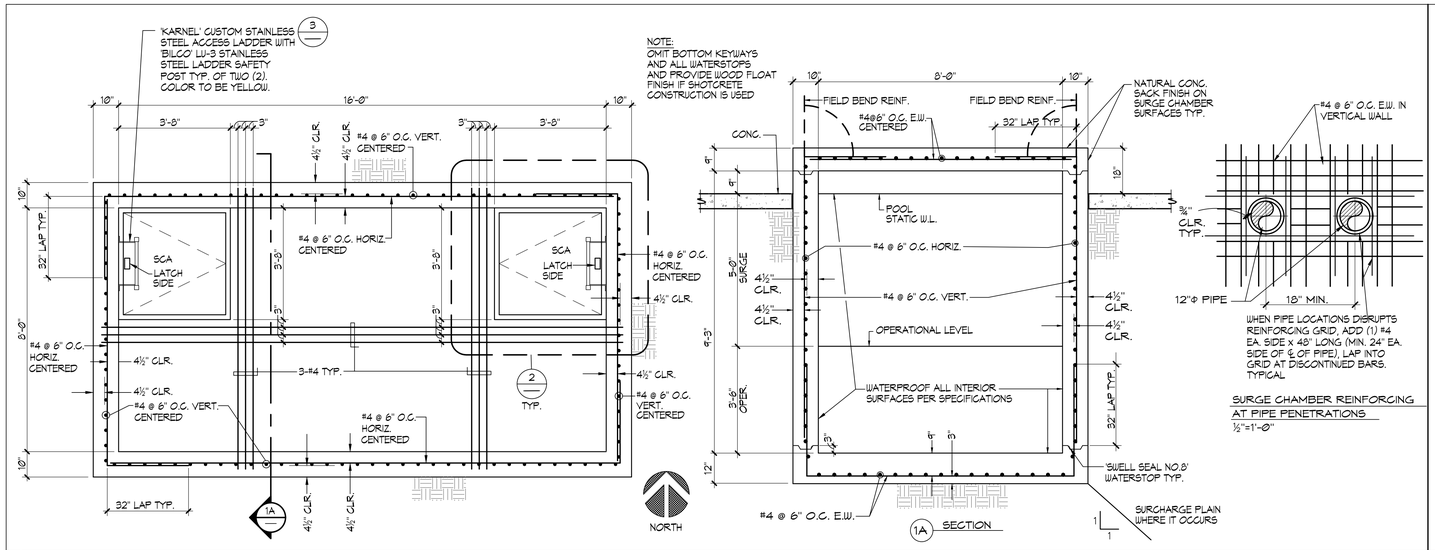

1 SURGE CHAMBER ½"=1'-0"

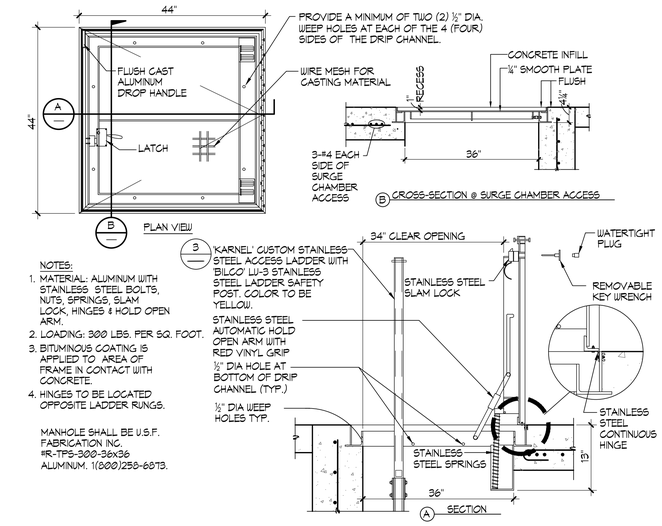

2 SURGE CHAMBER ACCESS COVER ¾"=1'-0"

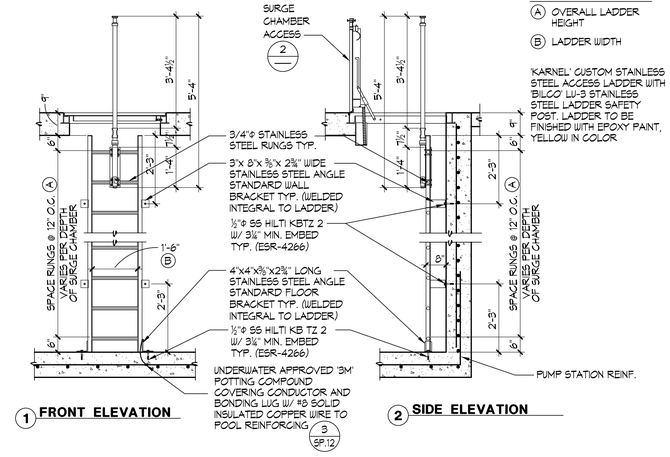

3 SURGE CHAMBER ACCESS LADDER ½" = 1'-0"

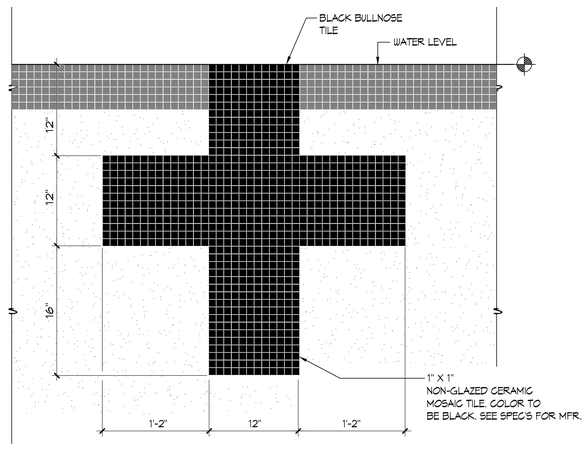

4 END WALL TARGETS 1½" = 1'-0"

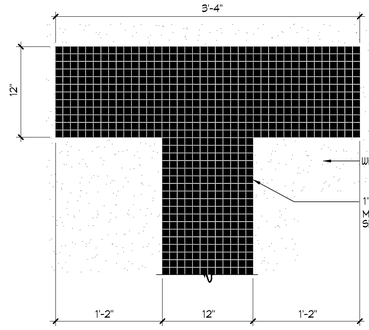

PLAN VIEW

5 RACING LANE LINE 1½"=1'-0"

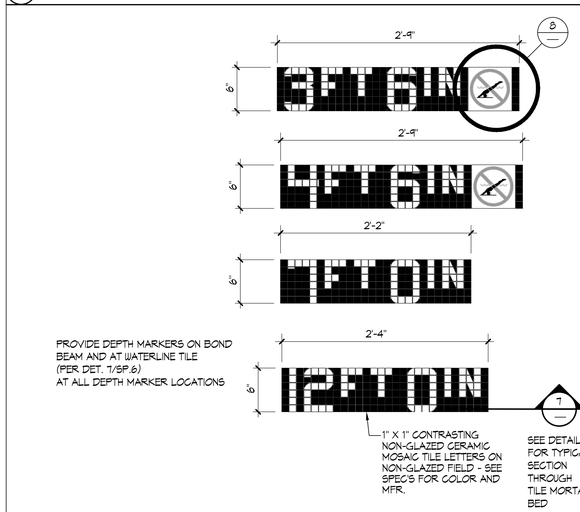

6 DEPTH MARKERS 1½" = 1'-0"

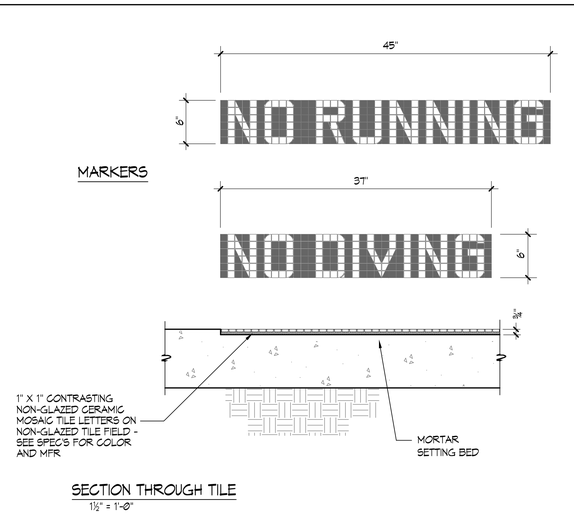

7 "NO RUNNING" / "NO DIVING" MARKERS 1½" = 1'-0"

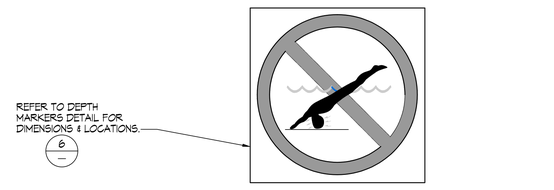

8 INTERNATIONAL "NO DIVING" MARKER 3" = 1'-0"

IDENTIFICATION STAMP
DIV. OF THE STATE ARCHITECT
APP: 03-122664 INC:
REVIEWED FOR
SS ☑ FLS ☑ ACS ☑
DATE: 05/12/2023

pjhm architects
LICENSED ARCHITECT RICHARD W. KRIEG No. C15585 REN. 02/25 STATE OF CALIFORNIA
AQUATIC DESIGN GROUP
2226 Faraday Ave, Carlsbad, CA 92008
AquaticDesignGroup.com
760.438.8400
LICENSED ARCHITECT GREGORY S. ROSE C-25802 REN. 07/31/23 STATE OF CALIFORNIA
OC Office: 24461 Ridge Route Drive #100, Laguna Hills, CA 92653 • OC Phone: 949.496.6191 • SD Office: 804 Pier View Way #103, Oceanside, CA 92054 • SD Phone: 760.730.5527 • LA Office: 837 Traction Avenue, #410, Los Angeles, CA 90013 • LA Phone: 213.278.0172 • Web: pjhm.com

HIGHLAND HIGH SCHOOL
50M POOL & AQUATICS CENTER
KERN HIGH SCHOOL DISTRICT

DETAILS

SP.7

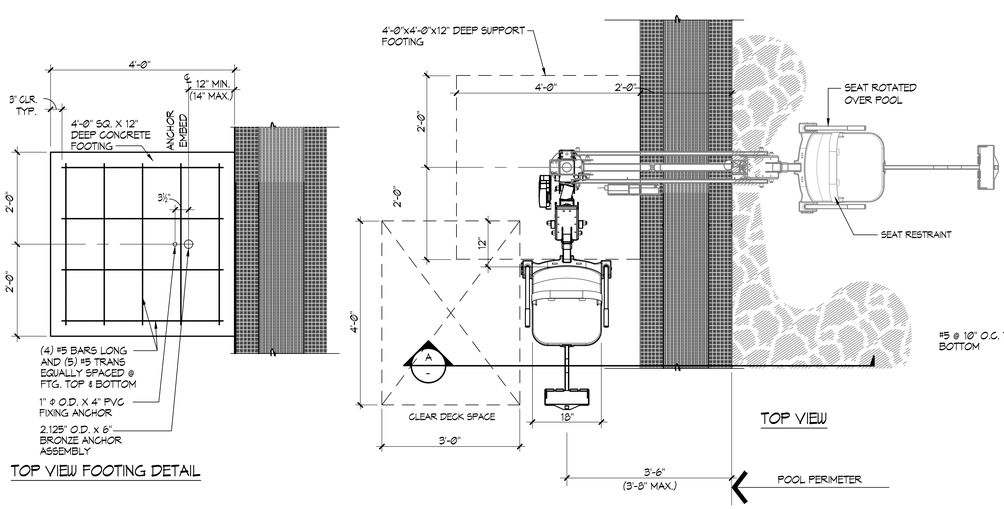

NOTES:

1. "AQUA CREEK" MIGHTY 400 F-MTY-400 (350 lbs. MIN. LIVE LOAD AND 400 lbs. MAX. LIFTING CAPACITY)
2. GUSSET COVER PLATE TO BE ATTACHED REQUIRING A TOOL FOR REMOVAL.
3. CONTRACTOR SHALL PROVIDE COVER FOR LIFT 'SPECTRUM' #21365; EXTRA BATTERY PACK 'SPECTRUM' #13257; AND TRANSPORTER CART 'SPECTRUM' #26060.
4. UTILIZE OUTLET IN POOL IDF ROOM FOR POOL LIFT BATTERY CHARGE STATION.
5. POOL LIFT SHALL BE LOCATED WHERE THE WATER LEVEL IS AT LEAST 36" AND DOES NOT EXCEED 48" DEEP , UNLESS ENTIRE POOL IS GREATER THAT 48" DEEP. (CBC SECTION 11B-1009.2.1)
6. ON THE RAISED POSITION, THE CENTERLINE OF THE SEAT SHALL BE LOCATED OVER THE DECK AND 16" MINIMUM FROM THE EDGE OF THE POOL. THE DECK SURFACE BETWEEN THE CENTERLINE OF THE SEAT AND THE POOL EDGE SHALL HAVE A 2% MAX. SLOPE. (CBC SECTION 11B-1009.2.2)
7. CLEAR DECK SPACE SHALL BE PROVIDED ON SIDE OF SEAT OPPOSITE THE WATER PARALLEL TO THE WATER 36" WIDE X 48" MINIMUM FROM A LINE LOCATED 12" BEHIND THE REAR EDGE OF THE SEAT. THE CLEAR SPACE SHALL HAVE A 2% MAX. SLOPE. (CBC SECTION 11B-1009.2.3)
8. THE HEIGHT OF THE LIFT SEAT SHALL BE DESIGNED TO ALLOW A STOP AT 17" MIN. TO 19" MAX. MEASURED FROM THE DECK TO THE TOP OF THE SEAT SURFACE WHEN IN THE RAISED POSITION. (CBC SECTION 11B-1009.2.4)
9. THE SEAT SHALL BE RIGID AND 17" MIN. TO 19" MAX. WIDE. THE LIFT SEAT SHALL HAVE A BACK SUPPORT 12" MIN. TALL. (CBC SECTION 11B-1009.2.4)
10. FOOTRESTS SHALL BE PROVIDED, EXCEPT FOR SPA LIFTS, AND SHALL MOVE WITH THE SEAT. LIFT SHALL HAVE TWO ARMRESTS. THE ARMREST POSITIONED OPPOSITE THE WATER SHALL BE REMOVABLE OR SHALL FOLD CLEAR OF THE SEAT WHEN THE SEAT IS IN THE RAISED POSITION. (CBC SECTION 11B-1009.2.6)
11. THE LIFT SHALL BE CAPABLE OF UNASSISTED OPERATION FROM BOTH THE DECK AND WATER LEVELS. CONTROLS AND OPERATING MECHANISMS SHALL BE OPERABLE WITH ONE HAND AND SHALL BE UNOBSTRUCTED WHEN THE LIFT IS IN USE (CBC SECTION 11B-309.4). LIFT MUST BE STABLE AND NOT PERMIT UNINTENDED MOVEMENT WHEN A PERSON IS GETTING INTO OR OUT OF THE SEAT. (CBC SECTION 11B-1009.2.7)
12. THE LIFT SHALL BE DESIGNED SO THAT THE SEAT WILL SUBMERGE TO A WATER DEPTH OF 18" MIN. BELOW THE STATIONARY WATER LEVEL. (CBC SECTION 11B-1009.2.8)
13. LIFT SEAT MUST HAVE AN OCCUPANT RESTRAINT FOR USE BY THE OCCUPANT OF THE SEAT AND THE RESTRAINT MUST MEET THE STANDARDS FOR OPERABLE CONTROLS IN COMPLIANCE WITH CBC SECTION 11B-1009.2.4 AND SECTION 11B-309.

1 ACCESSIBLE LIFT

¾" = 1'-Ø"

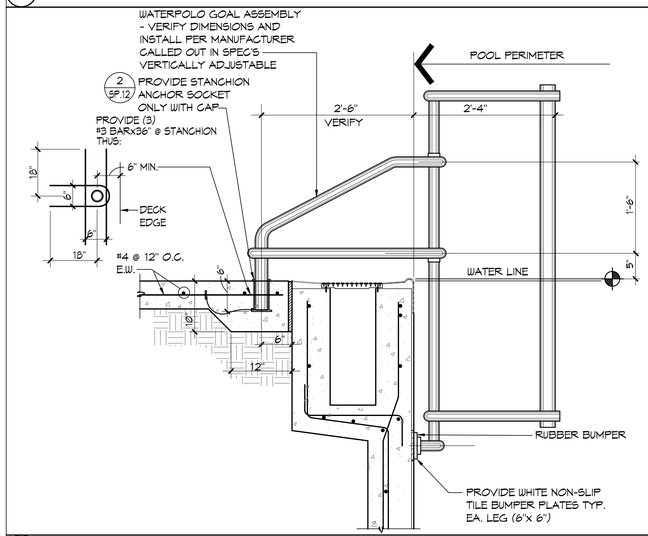

2 WATERPOLO GOAL

1"=1'-Ø"

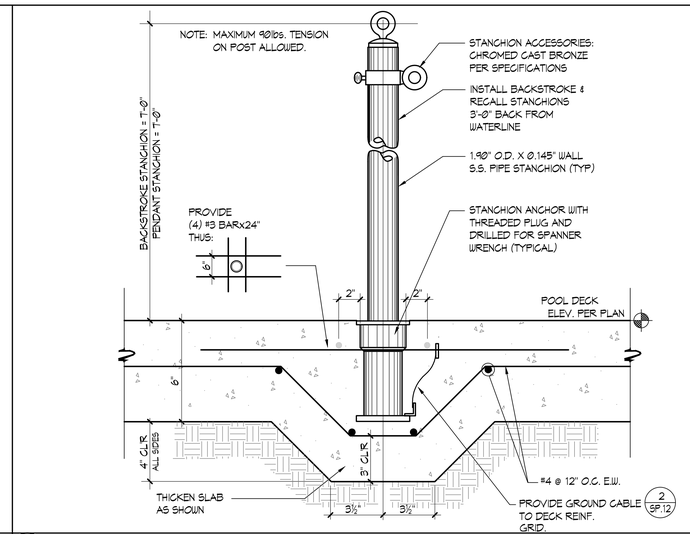

3 STANCHION POST/ANCHOR

3"=1'-Ø"

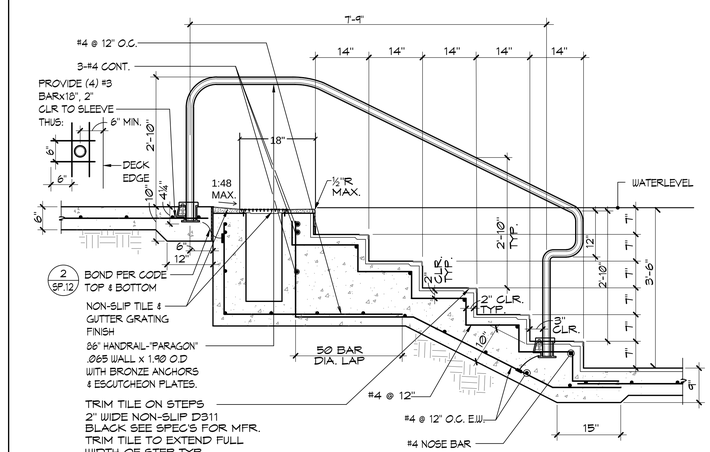

4 HANDRAIL DETAIL

¾"=1'-Ø"

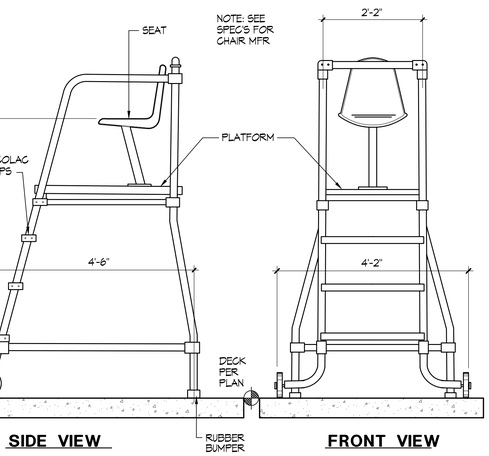

5 MOVEABLE LIFEGUARD CHAIR

¾"=1'-Ø"

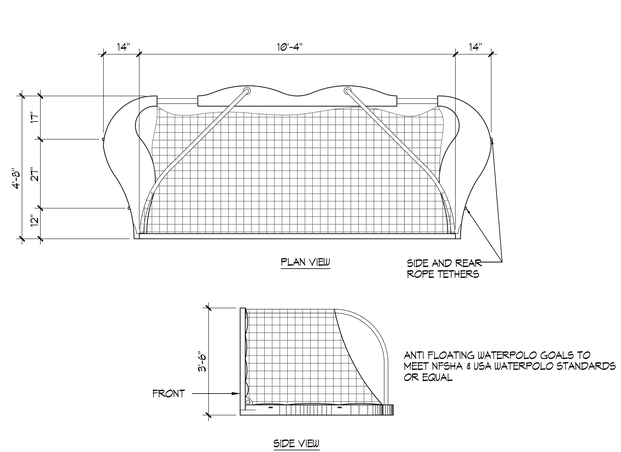

6 FLOATING WATER POLO GOALS

½"=1'-Ø"

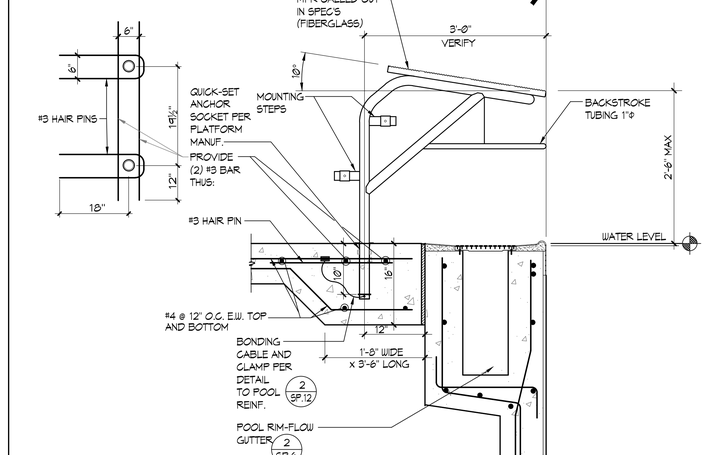

7 RACING PLATFORM

1"=1'-Ø"

IDENTIFICATION STAMP
DIV. OF THE STATE ARCHITECT
APP: 03-122664 INC:
REVIEWED FOR
SS ☑ FLS ☑ ACS ☑
DATE: 05/12/2023

pjhm architects
LA Phone: 213.278.0172 • Web: pjhm.com
LICENSED ARCHITECT GEORG W. KRUG No. C15585 REN. 02/25 STATE OF CALIFORNIA
AQUATIC DESIGN GROUP
2226 Faraday Ave. Carlsbad, CA 92008
AquaticDesignGroup.com
760.438.8400
LICENSED ARCHITECT GREGORY S. ATKINS C-25802 REN. 07/31/25 STATE OF CALIFORNIA
LA Office: 837 Traction Avenue, #410, Los Angeles, CA 90013 • SD Phone: 760.730.5527
OC Office: 24461 Ridge Route Drive #100, Laguna Hills, CA 92653 • OC Phone: 949.496.6191 • SD Office: 804 Pier View Way #103, Oceanside, CA 92054

HIGHLAND HIGH SCHOOL
50M POOL & AQUATICS CENTER

KERN HIGH SCHOOL DISTRICT

DETAILS

SP.8

5/24/2023 7:57:55 AM

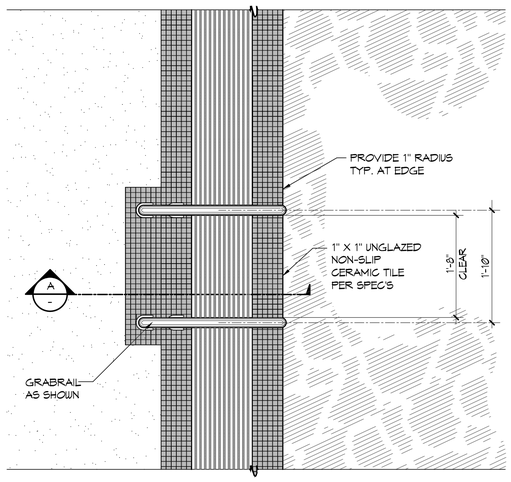

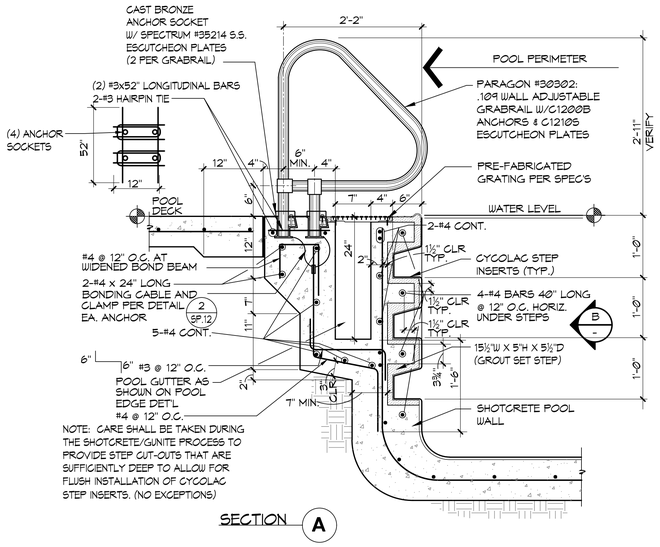

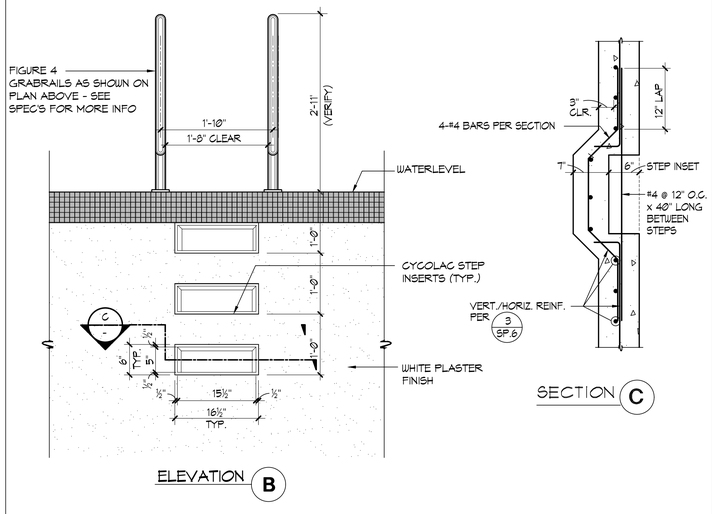

1 **GRABRAIL WITH STEPS** 1"=1'-0"

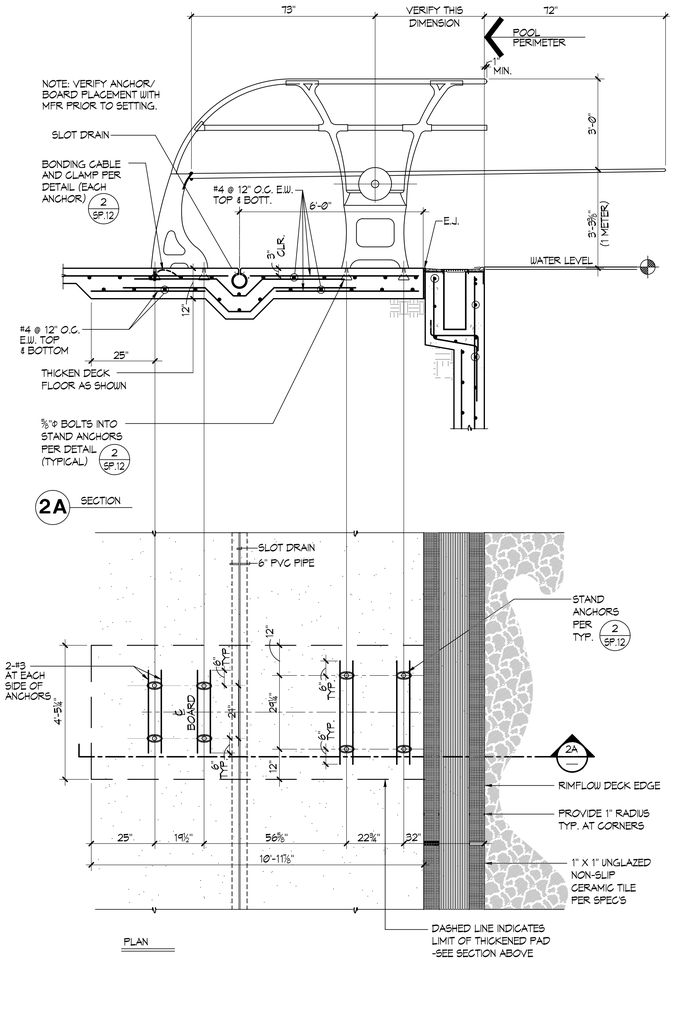

2 **ONE METER DIVE STAND** ½"=1'-0"

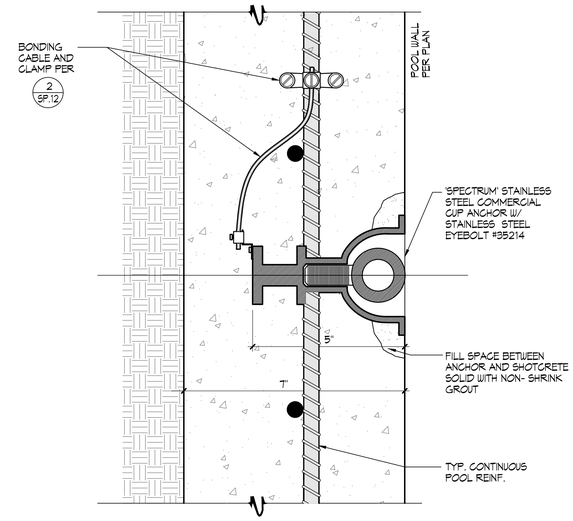

3 **ROPE ANCHOR** ½" = 1"

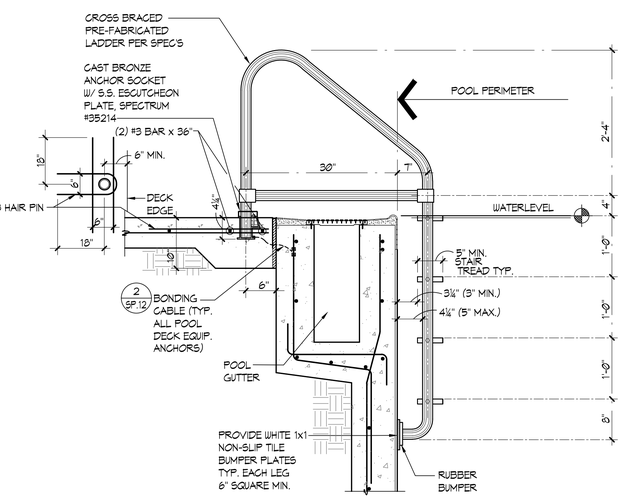

4 **POOL LADDER** 1"=1'-0"

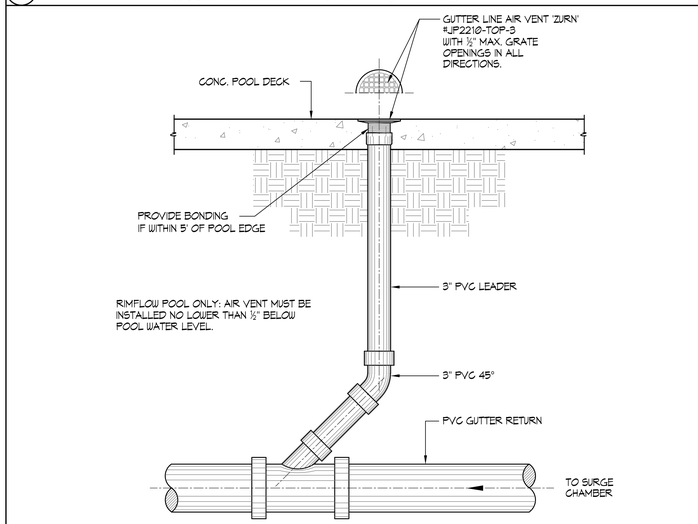

5 **AIR VENT** 1"=1'-0"

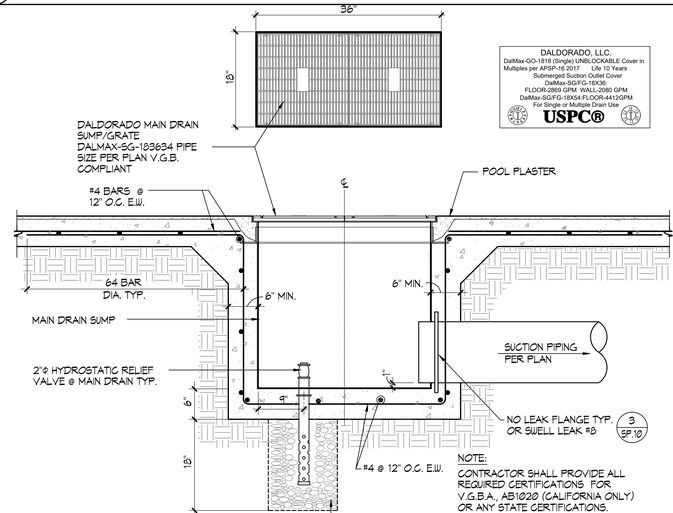

6 **MAIN DRAIN** 1" = 1'-0"

IDENTIFICATION STAMP
DIV. OF THE STATE ARCHITECT
APP: 03-122664 INC:
REVIEWED FOR
SS ☑ FLS ☑ ACS ☑
DATE: 05/12/2023

pjhm architects

LICENSED ARCHITECT RICHARD W. RISING No. C15585 REN. 02/25 STATE OF CALIFORNIA

AQUATIC DESIGN GROUP
2226 Faraday Ave. Carlsbad, CA 92008
AquaticDesignGroup.com
760.438.8400

LICENSED ARCHITECT GREGORY S. PETERSEN No. C-35802 REN. 07/31/23 STATE OF CALIFORNIA

HIGHLAND HIGH SCHOOL
50M POOL & AQUATICS CENTER

KERN HIGH SCHOOL DISTRICT

DETAILS

SP.9

OC Office: 24461 Ridge Route Drive #100, Laguna Hills, CA 92653 • SD Phone: 760.750.5527 • OC Phone: 949.496.6191 • SD Office: 804 Pier View Way #103, Oceanside, CA 92054 • LA Office: 837 Traction Avenue, #410, Los Angeles, CA 90013 • LA Phone: 213.278.0172 • Web: pjhm.com

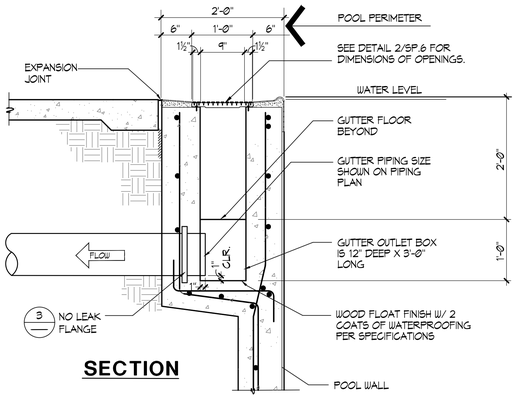

SECTION

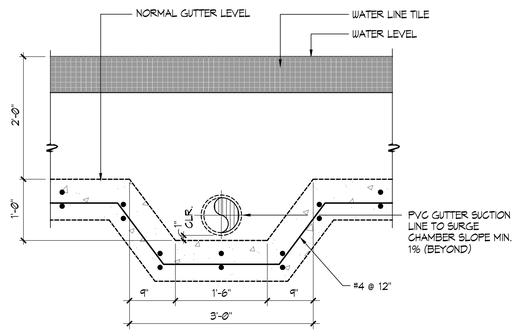

ELEVATION

1 GUTTER OUTLET 1"=1'-0"

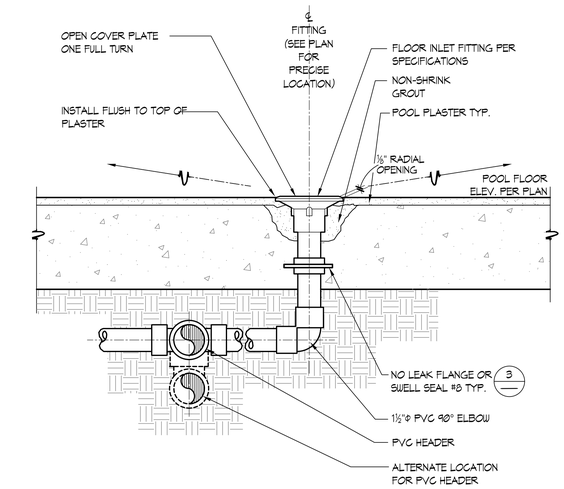

2 FLOOR INLET 3"=1'-0"

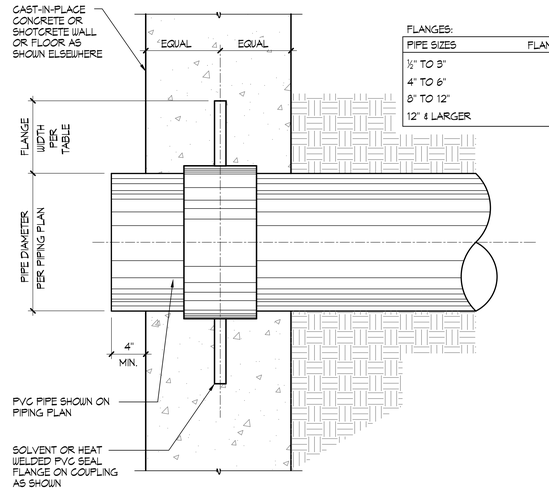

3 WATER STOP DETAIL NO SCALE

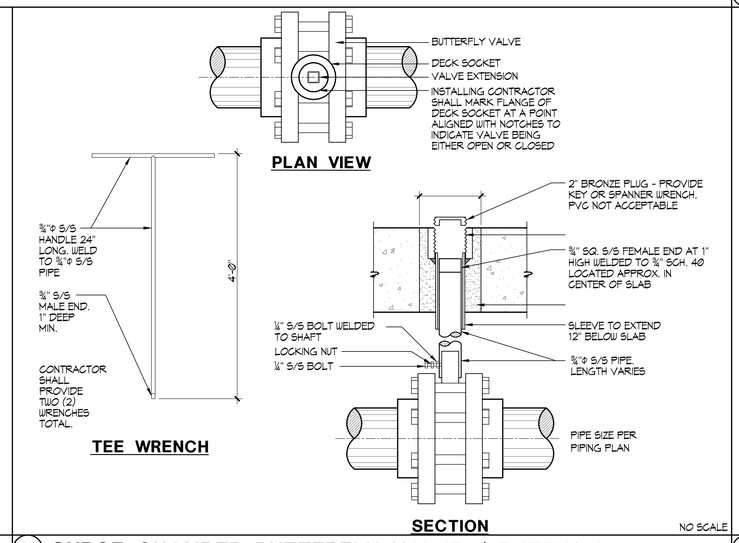

PLAN VIEW

TEE WRENCH

SECTION

4 SURGE CHAMBER BUTTERFLY VALVE / EXTENSION DETAIL NO SCALE

NOTE:
COORDINATE ALL PIPING WITH SITE UTILITIES INCLUDING PIPING, CONDUITS/STRUCTURES AND THE LIKE. COORDINATE ALL PIPING ELEVATIONS WITH ALL SITE UTILITIES.

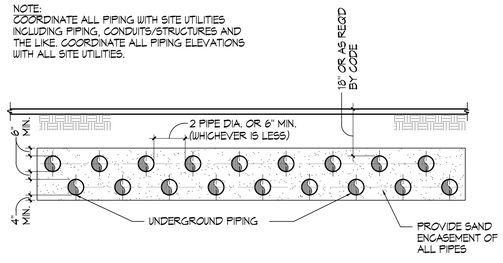

5 STACKED UNDERGROUND PIPING NO SCALE

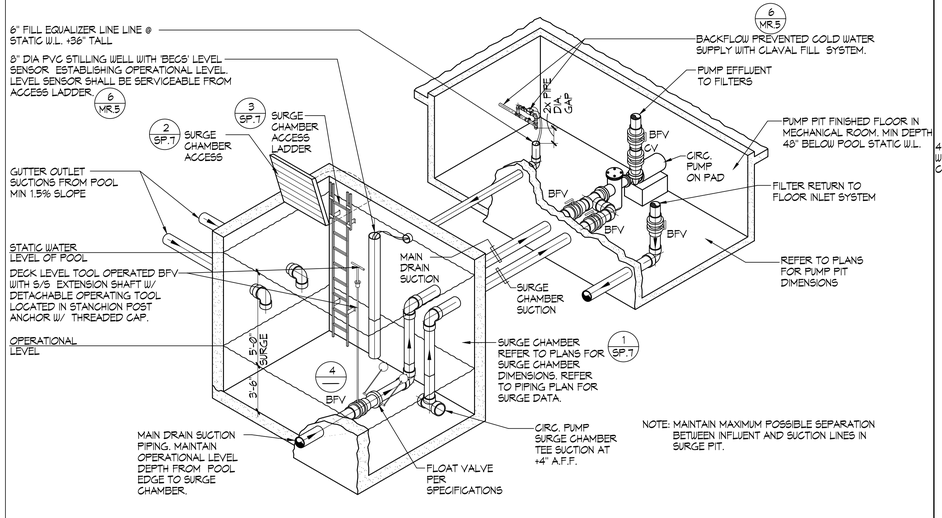

6 SURGE CHAMBER PIPING SCHEMATIC NO SCALE

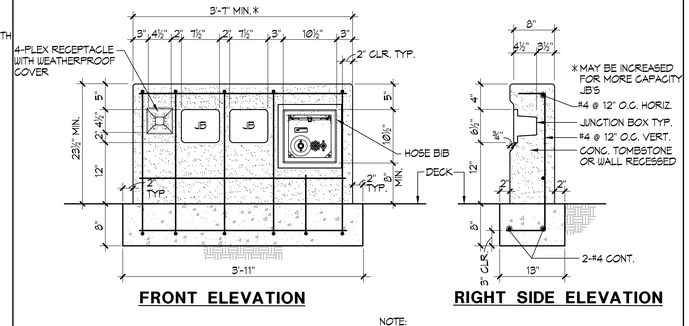

FRONT ELEVATION

RIGHT SIDE ELEVATION

NOTE:
PROVIDE ½" RADIUS ON ALL CONCRETE CORNERS.

7 UNDERWATER LIGHT JUNCTION BOX / HOSE BIB CONCRETE SURROUND DETAIL 1"=1'-0"

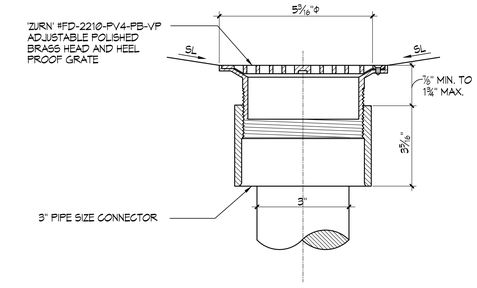

8 DECK AREA DRAIN ½"=1"

IDENTIFICATION STAMP
DIV. OF THE STATE ARCHITECT
APP: 03-122664 INC:
REVIEWED FOR
SS ☑ FLS ☑ ACS ☑
DATE: 05/12/2023

pjhm architects
LICENSED ARCHITECT GEORGE W. ARMS No. C15585 REN. 02/25 STATE OF CALIFORNIA
AQUATIC DESIGN GROUP
2226 Faraday Ave, Carlsbad, CA 92008
AquaticDesignGroup.com
760.438.8400
LICENSED ARCHITECT GREGORY S. ATKINS C-25802 REN. 07/31/23 STATE OF CALIFORNIA
OC Office: 24461 Ridge Route Drive #100, Laguna Hills, CA 92653 • OC Phone: 949.496.6191 • SD Office: 804 Pier View Way #103, Oceanside, CA 92054 • SD Phone: 760.730.5527 • LA Office: 837 Traction Avenue, #410, Los Angeles, CA 90013 • LA Phone: 213.278.0172 • Web: pjhm.com

HIGHLAND HIGH SCHOOL
50M POOL & AQUATICS CENTER

KERN HIGH SCHOOL DISTRICT

DETAILS

SP.10

8/30/2022 11:07:55 AM

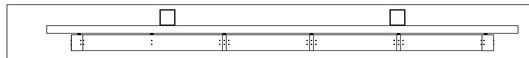

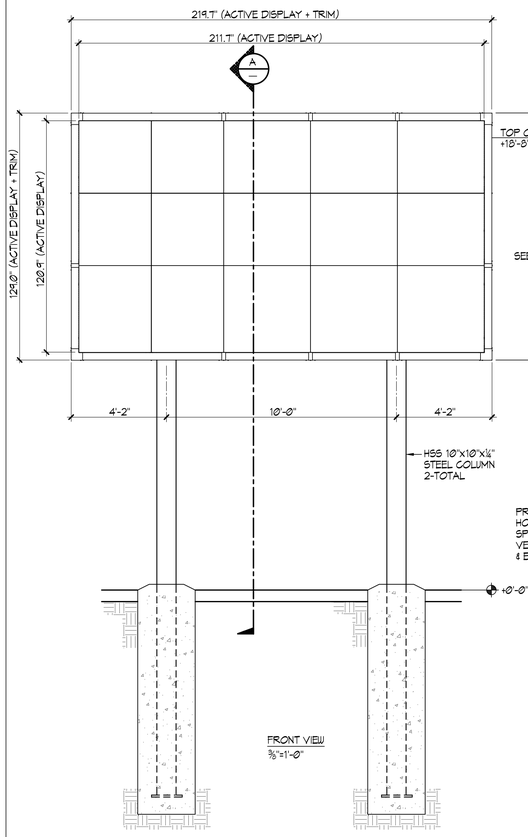

FRONT VIEW
⅜"=1'-0"

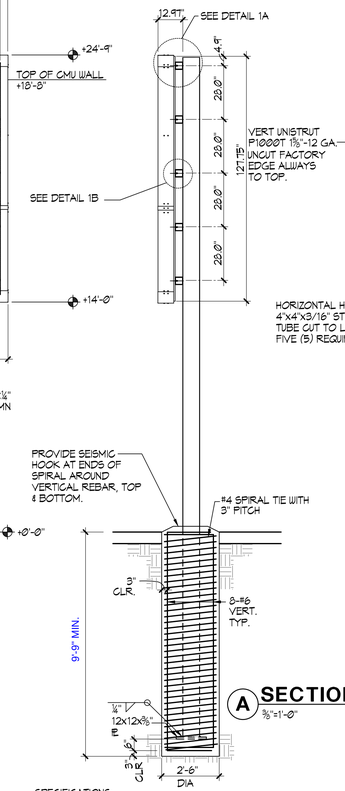

A SECTION
⅜"=1'-0"

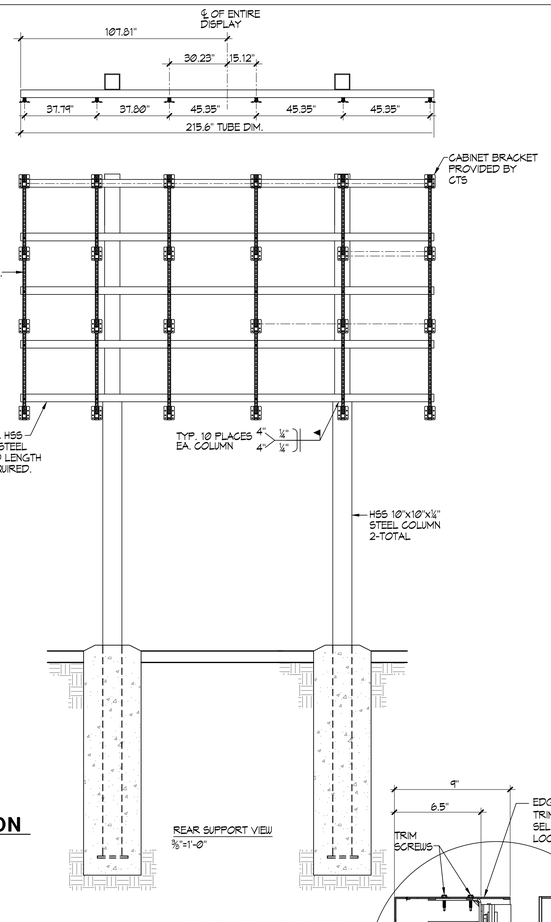

REAR SUPPORT VIEW
⅜"=1'-0"

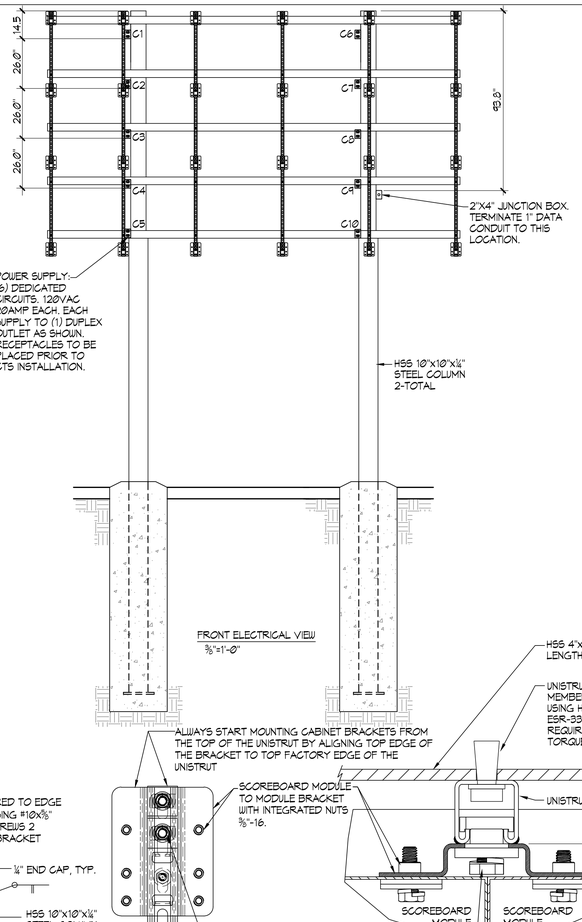

FRONT ELECTRICAL VIEW
⅜"=1'-0"

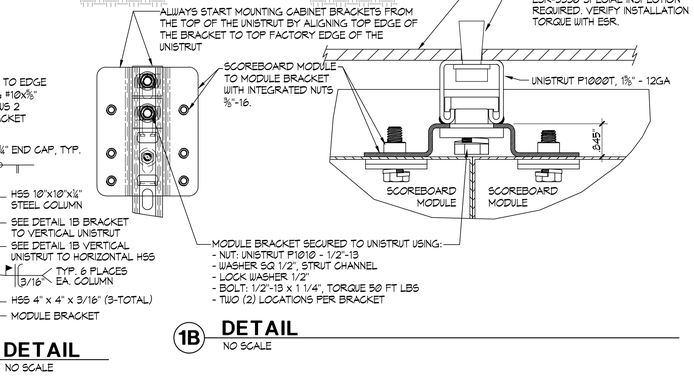

1A **DETAIL**
NO SCALE

1B **DETAIL**
NO SCALE

- EACH 2-PLEX RECEPTACLE SHALL BE 120V MIN. 20 AMP
- RECEPTACLES TO BE PLACED BEFORE CTS INSTALLATION.

- SINGLE GANG WALL BOX WITH BLANK PLATE FOR DATA CABLE. ONE PER DISPLAY.

- EACH CIRCUIT SHALL BE DEDICATED 120V, MIN. 20 AMPS. CALIFORNIA ELECTRIC CODE REQUIRES A MEANS OF DISCONNECTING SIGNS AT THE LOCATION OF THE SIGN. SCOREBOARD SHALL BE WIRED IN ACCORDANCE WITH NATIONAL ELECTRIC CODE ART. 600-6.

- IT IS EXTREMELY IMPORTANT THAT THE CIRCUITS USED TO POWER THE SCOREBOARD NOT BE SHARED WITH OTHER DEVICES. THE SCOREBOARD IS SENSITIVE TO 'NOISE' ON AC POWER LINES.

- DISPLAY SHALL BE EARTH GROUNDED. NUMBER AND LENGTHS OF RODS SHALL MEET CALIFORNIA ELECTRIC CODE.

- DISPLAY MAXIMUM POWER CONSUMPTION: 12,400 WATTS

SPECIFICATIONS:

GENERAL:

- ALL STEEL CONSTRUCTION
- FINISH TO BE BLACK POWDER COAT / ENAMEL PAINT
- DIMENSIONS ARE SUBJECT TO CHANGE DUE TO DETAILED DESIGN CONSIDERATIONS. ONLY APPROVED SHOP DRAWINGS SHALL BE USED FOR CONSTRUCTION.
- DISPLAY MUST BE EARTH GROUNDED. NUMBER AND LENGTHS OF RODS SHALL MEET CALIFORNIA ELECTRIC CODE.
- DESIGN AND CONSTRUCTION OF FRAME MOUNTING STRUCTURE IS TO BE DONE BY OTHERS AND MUST MEET ALL STATE BUILDING CODES.

SYSTEM WEIGHTS:

- DISPLAY - APPROXIMATELY 2,420 LBS.
- FRAME AND EDGE TRIM - APPROXIMATELY 260 LBS.
- DISPLAY MOUNTING CHANNELS SHALL BE ALIGNED USING TEMPLATE.

1 **SCOREBOARD DETAILS** ⅜"=1'-0"

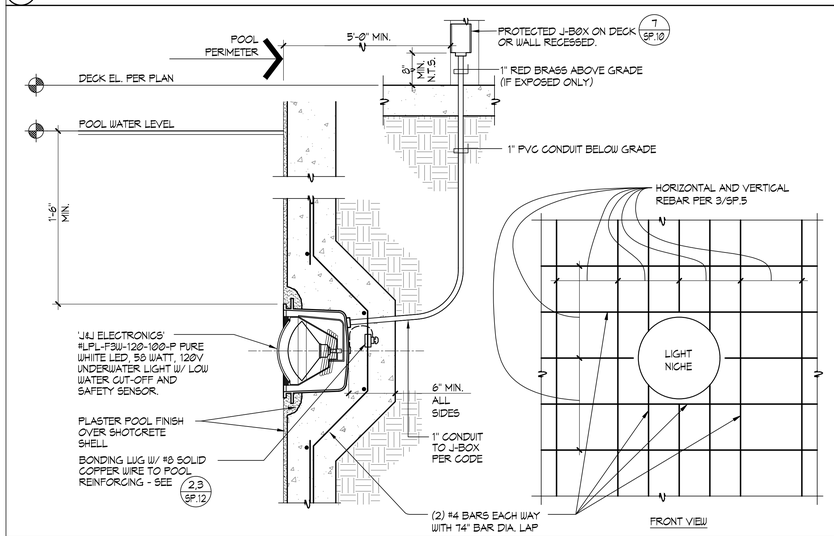

UNDERWATER LIGHT NOTES:

1. ALL CONDUITS IN POOL LIGHTING SYSTEM TO BE A MINIMUM OF 1".
2. (3 SP.12) CONDUCTORS TO POOL J-BOXES SHALL BE MINIMUM 2-#8 & 1#8 (SEE UNDERWATER LIGHT PLAN) SOLID UNBROKEN TO MAIN PANEL ISOLATED GROUND BUSS. THIS BUSS IS TO BE CONNECTED WITH SOLID INSULATED #8 COPPER WIRE TO UFER & COLDWATER GROUNDING LUG ON GROUNDING BUSS. UPSIZE CONDUCTORS AS REQUIRED FOR HOMERUNS EXCEEDING 100'.
3. (7 SP.10) ALL BRASS POOL J-BOXES SHALL BE FLUSH MOUNTED IN WALLS. IF FLUSH MOUNTING IS NOT POSSIBLE THEN MOUNTING SHALL BE SURFACE MOUNTED AND CONCRETE ENGASED.
4. CONDUITS WHERE ALLOWED BY CODE SHALL BE P.V.C. (POLYVINYL CHLORIDE) FROM WET NICHES TO BRASS J-BOXES TO LIGHTING PANEL. ALL CONDUITS IN FREE AIR SPACE AND ALL RISERS SHALL BE RED BRASS TYPICAL. PVC CONDUITS SHALL BE SOLVENT WELDED WITH PURPLE PRIMER AND GRAY HEAVY BODIED GLUE.
5. LIGHTING CONTACTORS SHALL BE "ALLEN-BRADLEY" #500 L, OR EQUAL MOUNTED IN A NEMA 12 HINGED COVER - LOCKABLE ENCLOSURE. CONTACTORS TO BE SWITCHED BY MOMENTARY SWITCH EQUAL TO "HUBBELL" #1551 MOUNTED IN J-BOX IN MECHANICAL EQUIPMENT ROOM. REFER TO ELECTRICAL PLANS FOR LOCATION OF OWNER COORDINATED REMOTE UNDERWATER LIGHT SWITCH.
6. BRASS POOL J-BOXES SHALL BE "HYDREL" #1719 ; W/ 1" HUBS OR EQUAL. (NO DIE CAST BOXES).
7. STRINGS SHALL BE PULLED IN ALL CONDUITS PRIOR TO PLACEMENT OF CONCRETE.
8. STATE CODES SHALL BE ADHERED TO, SPECIFICATIONS TO BE IN ACCORDANCE WITH SECTION 680 OF 2019 C.E.C. BOOK.
9. PROVIDE PULL BOXES AS MAY BE REQUIRED FOR RUNS EXCEEDING 150 FT. OR DUE TO CHANGES IN GRADE OR DIRECTION.
10. CONTRACTOR SHALL TEST UNDERWATER POOL LIGHT GFIC CIRCUITS AND PROVIDE LETTER TO OWNER/DSA UPON SUCCESSFUL TEST.
11. SEAL CONDUIT OPENING IN LIGHT NICHE WITH SILICON CAULKING AFTER LIGHT IS INSTALLED.
12. PRIOR TO LIGHT INSTALLATION, PROVIDE MINIMUM 10 PSI PRESSURE TEST ON ALL POOL LIGHT CONDUITS FOR FOUR (4) HOURS OBSERVED BY INSPECTOR OF RECORD. MAINTAIN PRESSURE UNTIL ALL DECKS ARE POURED.

2 **UNDERWATER LED LIGHT** 1½"=1'-0"

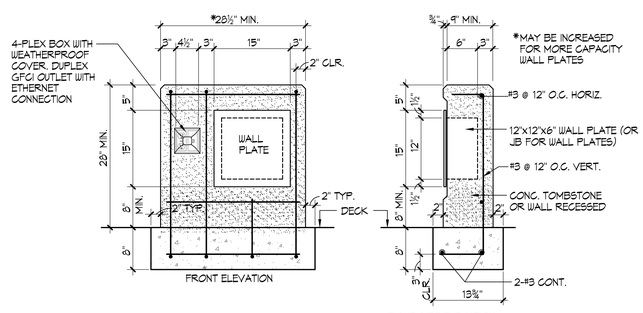

NOTE:
PROVIDE ¾" CHAMFER ON ALL CONCRETE CORNERS.

3 **TIMING SYSTEM WALL PLATE CONCRETE SURROUND DETAIL** 1"=1'-0"

IDENTIFICATION STAMP
DIV. OF THE STATE ARCHITECT
APP: 03-122664 INC:
REVIEWED FOR
SS ☑ FLS ☑ ACS ☑
DATE: 05/12/2023

pjhm architects

LICENSED ARCHITECT
RICHARD W. KRIEG
No. C15585
REN. 02/25
STATE OF CALIFORNIA

AQUATIC DESIGN GROUP
2226 Faraday Ave. Carlsbad, CA 92008
AquaticDesignGroup.com
760.438.8400

LICENSED ARCHITECT
GREGORY S. AXELL
C-35802
REN. 07/31/25
STATE OF CALIFORNIA

pjhm.com • Web:
LA Phone: 213.278.0172 • LA Office: 837 Traction Avenue, #410, Los Angeles, CA 90013
SD Phone: 760.730.5527 • SD Office: 804 Pier View Way #103, Oceanside, CA 92054
OC Office: 24461 Ridge Route Drive #100, Laguna Hills, CA 92653 • OC Phone: 949.496.6191

HIGHLAND HIGH SCHOOL
50M POOL & AQUATICS CENTER

KERN HIGH SCHOOL DISTRICT

DETAILS

SP.11

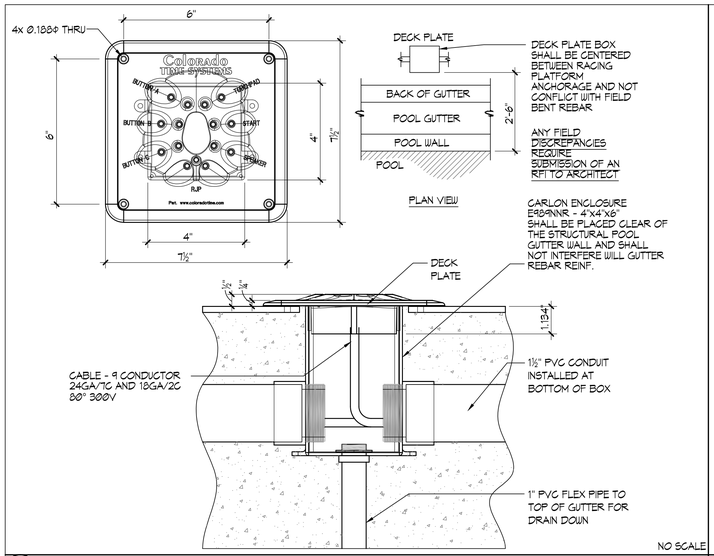

NO SCALE

1 TITANIUM DECK PLATE DETAIL (LOCATED UNDER RACING PLATFORM)

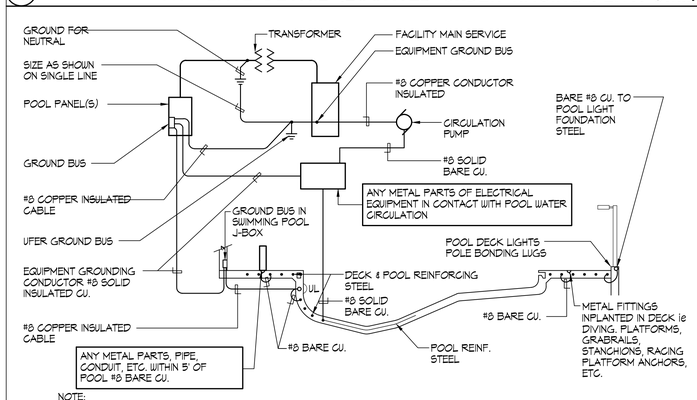

NOTE:

1. STRUCTURAL STEEL IN POOL DECK AND POOL SHALL BE BONDED TOGETHER (TIGHTLY MADE STEEL TIE-WIRES ARE APPROVED FOR BONDING STRUCTURAL ELEMENTS).
2. BONDING CONNECTOR TO COMMON GRID. (POOL STEEL MAY BE USED FOR THAT PURPOSE) SHALL BE MADE BY PRESSURE CONNECTORS OR CLAMPS OF BRASS, COPPER, OR COPPER ALLOY.
3. ALL GROUND BUSES SHALL BE SIZED FOR CONNECTION TO AWG SIZE 8 WIRE PROVIDING ONE SPARE TERMINAL.
4. GROUND AND BOND IN ACCORDANCE WITH ARTICLE 680 OF THE CALIFORNIA ELECTRICAL CODE. Ie. LADDERS, FENCING, POLE LIGHTS, DIVING & STARTING STANCHIONS, DISABLED LIFT ETC.
5. PROVIDE BONDING OF AUTOMATIC POOL COVER MOTORS REGARDLESS OF PROXIMITY TO POOL.

3 TYPICAL POOL BONDING AND GROUND DETAIL

NO SCALE

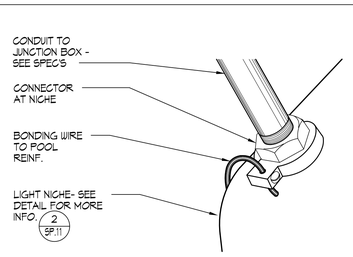

NICHE CONNECTOR

NO SCALE

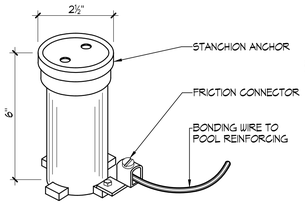

STANCHION ANCHOR

NO SCALE

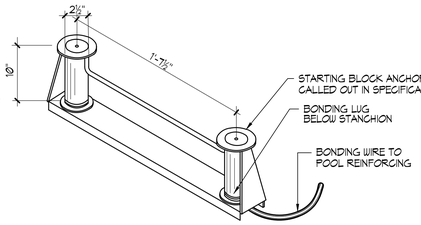

STARTING BLOCK ANCHOR

NO SCALE

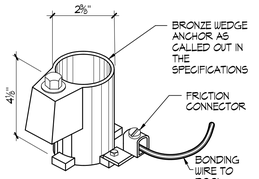

WEDGE ANCHOR

NO SCALE

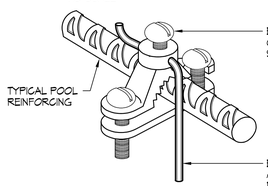

BONDING CLAMP

NO SCALE

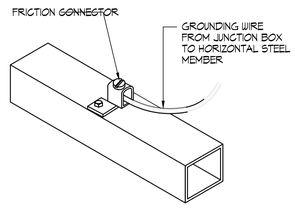

SCOREBOARD ELEC. GROUNDING

NO SCALE

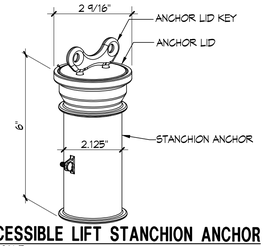

ACCESSIBLE LIFT STANCHION ANCHOR

NO SCALE

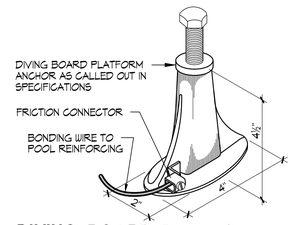

DIVING BOARD PLATFORM ANCHOR

NO SCALE

2 BONDING DETAILS

NO SCALE

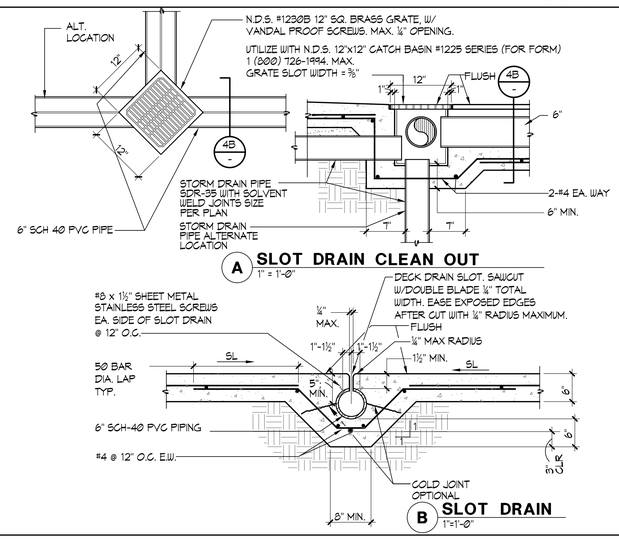

4 SLOT DRAIN

1"=1'-0"

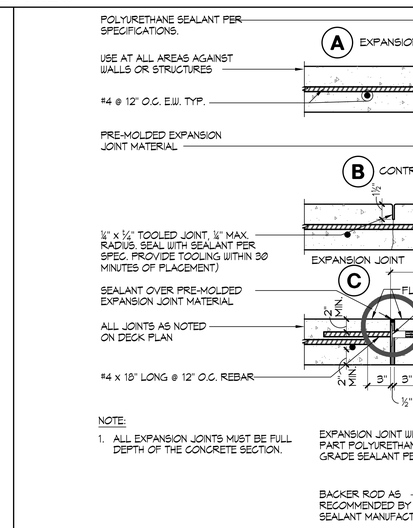

NOTE:

1. ALL EXPANSION JOINTS MUST BE FULL DEPTH OF THE CONCRETE SECTION.

5 CONCRETE DECK JOINT DETAILS

1½"=1'-0"

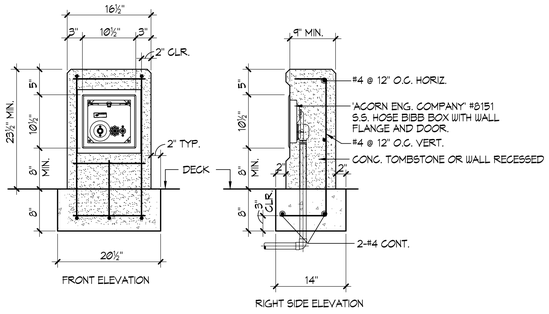

NOTE:
PROVIDE ¾" CHAMFER ON ALL CONCRETE CORNERS, SACK & PATCH ALL EXPOSED SURFACES.

6 HOSE BIBB

1"=1'-0"

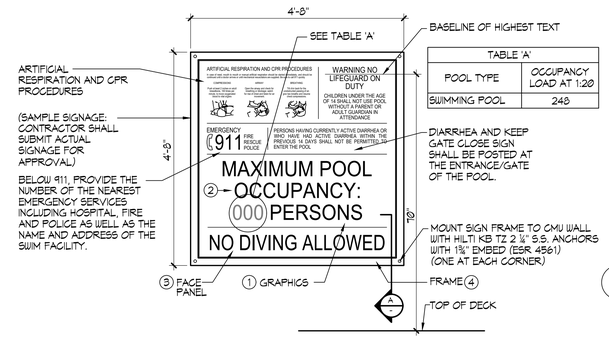

NOTES:

1. COORDINATE SIGNAGE PLACEMENT AND COLOR SCHEME WITH ARCHITECT/OWNER PRIOR TO INSTALLATION.
2. CONTRACTOR TO PROVIDE SHOP DRAWINGS OF PROPOSED SIGNAGE FOR REVIEW.
3. CHARACTER FONT STYLE SHALL BE CONVENTIONAL AND NOT UNUSUAL AND SHALL BE EASY TO READ.
4. MINIMUM CHARACTER HEIGHT = ⅝"

SIGNAGE NOTES AND SPECIFICATIONS:

1. ⅛" THICK PAINTED ALUMINUM BACKER PANEL.
2. SILKSCREENED COPY/GRAPHICS WITH NON GLARE FINISH.
3. ¼" THICK PAINTED ALUMINUM FACE PANEL WITH SILKSCREENED COPY/GRAPHICS. ATTACH TO ⅛" THICK PAINTED ALUMINUM BACKER PANEL USING 'VHB' TAPE AND SILICONE ADHESIVE.
4. 2" WIDE x ½" THICK PAINTED ALUMINUM SIGN FRAME ADHERED TO ⅛" THICK PAINTED ALUMINUM BACKER USING 'LORDS' ADHESIVE AS REQUIRED. VERTICAL SECTIONS OF FRAME TO BE RECTANGULAR TUBE. FILL AND SAND SEAM ALONG EDGE AND FACE PRIOR TO PAINTING.

REQUIRED SIGNAGE:

1. ALL SIGNS SHALL HAVE CLEARLY LEGIBLE LETTERS OR NUMBERS NOT LESS THAN 4 INCHES HIGH, UNLESS OTHERWISE NOTED, AFFIXED TO A WALL, POLE, GATE, OR SIMILAR PERMANENT STRUCTURE IN A LOCATION VISIBLE TO ALL POOL USERS.
   - A. POOL USER CAPACITY SIGN; A SIGN SHALL INDICATE THE MAXIMUM NUMBER OF POOL USERS PERMITTED FOR EACH POOL. SEE TABLE 'A'.
   - B. NO DIVING SIGN; SIGNS SHALL BE POSTED IN CONSPICUOUS PLACES AND SHALL STATE 'NO DIVING' AT POOLS WITH A MAXIMUM WATER DEPTH OF 6 FEET OR LESS.
   - C. NO LIFEGUARD SIGN; WHERE NO LIFEGUARD SERVICE IS PROVIDED, A WARNING SIGN SHALL BE POSTED STATING, 'NO LIFEGUARD ON DUTY.' THE SIGN ALSO SHALL STATE IN LETTERS AT LEAST 1 INCH HIGH, "CHILDREN SHOULD NOT USE POOL WITHOUT ADULT SUPERVISION."
   - D. ARTIFICIAL RESPIRATION AND CPR SIGN; AN ILLUSTRATED DIAGRAM WITH TEXT AT LEAST ⅛ INCH HIGH OF ARTIFICIAL RESPIRATION AND CPR PROCEDURES SHALL BE POSTED.
   - E. EMERGENCY SIGN; THE EMERGENCY TELEPHONE NUMBER 911. WITH NUMBERS NOT LESS THAN 4", THE NUMBER OF THE NEAREST EMERGENCY SERVICES AND THE NAME AND STREET ADDRESS OF THE POOL FACILITY SHALL BE POSTED.
   - F. NO USE AFTER DARK; WHERE POOLS WERE CONSTRUCTED FOR WHICH LIGHTING WAS NOT REQUIRED A SIGN SHALL BE POSTED AT EACH POOL ENTRANCE ON THE OUTSIDE OF THE GATE(S) STATING, "NO USE OF POOL ALLOWED AFTER DARK."
   - G. KEEP CLOSED; A SIGN SHALL BE POSTED ON THE EXTERIOR SIDE OF GATES AND DOORS LEADING INTO THE POOL ENCLOSURE AREA STATING, "KEEP GATE CLOSED" OR "KEEP DOOR CLOSED".
   - H. DIARRHEA; A SIGN IN LETTERS AT LEAST 1"INCH HIGH AND IN A LANGUAGE OR DIAGRAM THAT IS CLEARLY STATED SHALL BE POSTED AT THE ENTRANCE AREA OF A PUBLIC POOL WHICH STATES THAT PERSONS HAVING CURRENTLY ACTIVE DIARRHEA OR WHO HAVE HAD ACTIVE DIARRHEA WITHIN THE PREVIOUS 14 DAYS SHALL NOT BE ALLOWED TO ENTER THE POOL WATER.
2. DIRECTION OF FLOW SIGNAGE AND LABELS.
   - A. THE DIRECTION OF FLOW FOR THE RECIRCULATION EQUIPMENT SHALL BE LABELED CLEARLY WITH DIRECTIONAL SYMBOLS SUCH AS ARROWS ON ALL PIPING IN THE EQUIPMENT AREA.
   - B. WHERE THE RECIRCULATION EQUIPMENT FOR MORE THAN ONE POOL IS LOCATED ON SITE, THE EQUIPMENT SHALL BE MARKED AS TO WHICH POOL THE SYSTEM SERVES.
   - C. VALVES AND PLUMBING LINES SHALL BE LABELED CLEARLY WITH THE SOURCE OR DESTINATION DESCRIPTIONS.

7 POOL SIGNAGE DETAIL

¾"=1'-0"

IDENTIFICATION STAMP
DIV. OF THE STATE ARCHITECT
APP: 03-122664 INC:
REVIEWED FOR
SS ☑ FLS ☑ ACS ☑
DATE: 05/12/2023

pjhm architects
LICENSED ARCHITECT GREGORY S. KRAUS No. C15585 REN. 02/25 STATE OF CALIFORNIA
AQUATIC DESIGN GROUP
2226 Faraday Ave. Carlsbad, CA 92008
AquaticDesignGroup.com
760.438.8400
LICENSED ARCHITECT GREGORY S. KRAUS C-15802 REN. 07/31/23 STATE OF CALIFORNIA
SD Phone: 760.730.5527 • LA Office: 837 Traction Avenue, #410, Los Angeles, CA 90013 • LA Phone: 213.278.0172 • Web: pjhm.com
OC Office: 24461 Ridge Route Drive #100, Laguna Hills, CA 92653 • OC Phone: 949.496.6191 • SD Office: 804 Pier View Way #103, Oceanside, CA 92054 • SD Phone: 760.730.5527

HIGHLAND HIGH SCHOOL
50M POOL & AQUATICS CENTER

KERN HIGH SCHOOL DISTRICT

DETAILS

SP.12

9/21/2023 11:51:33 AM

EQUIPMENT LIST

(1) SWIMMING POOL STRAINER: 'MER-MADE' F.O. SERIES FRP REDUCING BASKET STRAINER: ONE (1) 12"x10" STANDARD, WITH ACRYLIC LID AND TWO (2) STAINLESS STEEL STRAINERS EA. (150lbs.)

(2) SWIMMING POOL CIRCULATION PUMP: 'PACO' #3015-3; 8"x10"x15" TYPE 'KPV' END SUCTION CENTRIFUGAL PUMP; 1150 RPM 460V, 3PH; 50HP; RATED AT 1,975 GPM @ 60 FT. TDH; 90% EFFICIENT; PREMIMUM EFFICIENCY TEFC MOTOR; EPOXY COAT ALL WET SURFACES. 'PACO', 'AURORA' OR EQUAL. (2,300 lbs.) PROVIDE SPCS EKO-FLEX PUMP CONTROL SYSTEM. VARIABLE SPEED DRIVE MODEL SPCS2532EF4 SYSTEM 21"x41"x11" DEEP. COORDINATE MOUNTING LOCATION TO MAINTAIN DESIRED CLEARANCES, 460V 3PH. (1171 lbs.)

(3) SWIMMING POOL FILTERS: 'EKO' SYSTEMS GEN 2' #EKO-42260-1206-T-S AUTOMATIC FILTER CONTROL (AFC) FULLY AUTOMATIC HI-RATE PERMANENT MEDIA FILTER WITH 130 SQ. FT. OF FILTER AREA RATED AT 2,080 GPM AT 16 GPM/SQ. FT. COMPLETE WITH 12" FACE PIPING, 6" BACKWASH, SEISMIC ANCHORAGE. PROVIDE ALL UTILITIES, PIPING, VALVING ETC. (8,660 lbs EACH TANK) 'EKO' SYSTEMS GEN 2' OR EQUAL. PROVIDE SIGNET P51530-PX FLOSENSOR WITH DIGITAL READ-OUT. ONE (1) SYSTEM TOTAL.

(4) SWIMMING POOL HEATER(S): INDIRECT FIRED POOL HEATING PACKAGE SYSTEM; 'AQUA5' CREST WITH SMARTTOUCH CONTROL CONDENSING MODULATING BOILER, TITANIUM PLATE AND FRAME HEAT EXCHANGER WITH CPVC CONNECTIONS, FACTORY ASSEMBLED SKID MOUNTED PACKAGE, CALIFORNIA CODE CONTROLS, 1½" NATURAL GAS CONNECTION 3" WATER CONNECTIONS, 8" DIAMETER VENT SIZE, 8" AIR INLET, PVC VENTED; 1,500,000 BTU PER HOUR INPUT, 97% EFFICIENT, PROVIDE ¾" COLD WATER TO EACH UNIT WITH ADJACENT FLOOR SINK FOR CONDENSATE. 'LOCHINVAR AP01500N', WEIGHT = 3,091 lbs. EA. THREE (3) TOTAL.

(5) CHLORINE STORAGE/FEED SYSTEM: PROVIDE 'CHEM-TAINER' 500 GALLON #TC5911DC; DUAL STORAGE/CONTAINMENT TANK WITH LID SEISMICALLY RESTRAINED; OPERATING WEIGHT = (4,165lbs). TWO (2) TOTAL. COMPLIES WITH FED. REG #40CFR-264-193. FEED PUMP(S) SHALL BE 'LMI' #SD43-88P-KSI; 288 GPD @ 55 PSI WITH FRP SHELF BRACKETS. TWO (2) TOTAL. HARD PIPE TO POINT OF INJECTION.

(6) ACID STORAGE/FEED SYSTEM: PROVIDE 'CHEM-TAINER' 350 GALLON #TC5256DC; DUAL STORAGE/CONTAINMENT TANK WITH LID SEISMICALLY RESTRAINED; OPERATING WEIGHT = (2,915 lbs.). COMPLIES WITH FED. REG #40CFR-264-193. PROVIDE 60 GALLON ACID VAPOR RECOVERY SYSTEM. ONE (1) TOTAL.

(7) CARBON DIOXIDE STORAGE FEED SYSTEM: PROVIDE ONE (1) 'NOVO-750', 750 lb. CRYOGENIC LIQUID CO2 STORAGE TANK WITH REMOTE FILL PORT. 594 LIQUID lbs., (5,195 CUBIC FEET OF GASEOUS CO2 AT NTP) ONE (1) TOTAL. PROVIDE EKO3PH-MTS CO2 HIGH EFFICIENCY FEED SYSTEM WITH ALKALINITY CONTROL, @ TO 160 SCFH FEED CAPACITY BOOSTER PUMP, PIPING INJECTOR, FLOWMETER, RELAYS AND ACID FEED ALKALINITY CONTROL. ONE (1) SYSTEM TOTAL (92lbs. EA.) PROVIDE HARD WIRED 'ANALOX' #API KIT CO2 DETECTOR WITH AUDIBLE AND VISUAL ALARMS IN EACH CHEMICAL ROOM, UL 1471 STANDARD LISTED, ONE (1) TOTAL.

(8) WATER CHEMISTRY CONTROLLER: PROVIDE ETHERNET CONNECTION TO 'BECSYS' CS-BECSYS1-BP-E WATER CHEMISTRY CONTROLLER. PROVIDE COMPLETE SYSTEM CONTROL PACKAGE. 'BECSYS SYSTEM 7', 'IMPACT', 'WALLACE & TIERNAN' OR APPROVED EQUAL.

(9) ELECTRICAL: PROVIDE ALL ELECTRICAL WIRING, CONDUIT, PANEL(S), STARTER/DISCONNECT INTERCONNECT(S) ETC. AS REQUIRED FOR PROPER EQUIPMENT INSTALLATION PER MANUFACTURERS RECOMMENDATIONS AND SHOP DRAWINGS. COORDINATE ALL WORK WITH OTHER TRADES AS REQUIRED. REFER TO ELEC. PLANS FOR ALL ADDITIONAL INFO.

(10) PUMP PIT: 11'-8"X12'-6"X4'-0" DEEP. PROVIDE 2"Ø GALV. STANDARD STEEL PIPE GUARDRAIL. PROVIDE FLOOR DRAIN TO WASTE. PROVIDE WATERPROOFING PER SPECIFICATIONS. ACCESS LADDER TO BE 'KARNEL' CUSTOM STAINLESS STEEL OR EQUAL.

(11) BACKWASH PIT: 8'-8" X 8'-10" X 4'-0" DEEP WITH 6"Ø P-TRAP OUTLET TO SEWER. PROVIDE 2"Ø GALV. STANDARD PIPE GUARDRAIL AND 'KARNEL' CUSTOM STAINLESS STEEL LADDER. PROVIDE WATERPROOFING PER SPECIFICATIONS. COORDINATE WITH STRUCTURAL AND PLUMBING PLANS.

(12) FILL SYSTEM: 3" 'CLA-VAL' FILL SYSTEM TO INCLUDE 3" 'CLA-VAL' SOLENOID CONTROL VALVE #136-01BY, 3" DUCTIRON, EPOXY COATED BODY WITH CAST IRON DISC RETAINER AND DIAPHRAGM WASHER, BRONZE TRIM, FLANGED GLOBE PATTERN, 120V AT 60HZ. SOLENOID WIRING SHALL BE WIRED TO WATER CHEMISTRY CONTROLLER. PROVIDE 6" AIR GAP AT FILL POINT.

(13) EYEWASH/SHOWER: HAWS MODEL #8300-8304CRP BARRIER FREE COMBINATION SHOWER AND EYE/FACE WASH WITH CORROSION RESISTANT PROTECTION. SEE MEP SHEETS FOR SUPPLY PIPING. TWO (2) TOTAL.

(14) LIGHTING CONTACTOR PANEL: 'ALLEN BRADLEY #500L', OR APPROVED EQUAL. PANEL SHALL BE MOUNTED IN A NEMA 12 HINGED COVER - LOCKABLE ENCLOSURE. CONTACTORS TO BE SWITCHED BY MOMENTARY SWITCH EQUAL TO 'HUBBELL' #1851 MOUNTED IN L-BOX IN MECHANICAL EQUIPMENT ROOM. REFER TO ELECTRICAL PLANS FOR LOCATION OF OWNER COORDINATED REMOTE UNDERWATER LIGHT SWITCH.

(15) POOL OPERATOR WORKSTATION DESK: 'DIVERSIFIED WOODCRAFTS, INC.' MODEL #1214K-L-ADA LAB INSTRUCTORS WITH PHENOLIC TOP AND SINK. SEE MEP PLANS FOR WATER SUPPLY PIPING.

(16) SWIMMING POOL COOLER: 'GLACIER POOL COOLER' MODEL GPC-280 TWO (2) TOTAL. 237 GPM @ 6.6 FT TDH., 2HP FANS WITH 4" INFLUENT/EFFLUENT PIPING, ½HP SUMP PUMP TO SURGE CHAMBER AND 1" DRAIN DOWN. 86" DIA. x 99" TALL, 1,588 lbs. OPERATION WEIGHT.

(17) SWIMMING POOL COOLER BOOSTER PUMP: 'PENTAIR' EQ SERIES; EQUK-500; 208-230/460V; 5 HP; #340029, 6" x 4"; NSF LISTED, 574 GPM @ 27 FT TDH. ONE (1) TOTAL.

HEATER/GAS PIPING INSTALLATION NOTE

GAS FIRED POOL HEATER(S) INSTALLED ON A GAS SUPPLY SYSTEM UTILIZING A 2 PSI OR 5 PSI SUPPLY. GAS PRESSURE SHALL REQUIRE A REGULATOR TO REDUCE THE SUPPLY PRESSURE. A PROPERLY SIZED AND INSTALLED LOCK-UP-TYPE HIGH GAS PRESSURE REGULATOR (HGPR) SHALL BE USED TO REDUCE THE GAS PRESSURE AT THE UNIT INLET TO A MINIMUM OF 4" TO A MAXIMUM OF 11" WATER COLUMN.

'LOCHINVAR' RECOMMENDS THAT ANY REQUIRED LINE LOCK-UP-TYPE HIGH GAS PRESSURE REGULATOR BE INSTALLED WITH A MINIMUM OF 5 FEET TO 10 FEET OF PIPE FROM ITS DISCHARGE TO THE UNIT'S GAS INLET. IF A STRAIGHT DISTANCE OF GAS PIPE IS NOT AVAILABLE THE ADDITION OF A VERTICAL 'U' IN THE GAS PIPING DOWN STREAM FROM THE 'HGPR' CAN BE USED TO ACHIEVE THE 5 FEET TO 10 FEET OF DISTANCE.

CONTRACTOR IS RESPONSIBLE FOR HEATER VENTING, EXHAUST DUCTING, FLUE TERMINUS AND PENETRATION(S) THROUGH BUILDING STRUCTURE.

LEGEND

BV = BALL VALVE
BFV = BUTTERFLY VALVE
CV = CHECK VALVE
FM = FLOWMETER
BW = BACKWASH
FS = FLOOR SINK
AI = ACID INJECTION
CI = CHLORINE INJECTION
PH / PS = PIPE HANGER / PIPE SUPPORT (3,4 MR.8; 6 S-1.5)
PG/VG = VACUUM / PRESSURE GAUGE (3 MR.5; 5 MR.6)
FD = FLOOR DRAIN
RPBFP = REDUCED PRESSURE BACKFLOW PREVENTOR

GENERAL NOTES

1. THE PIPING SYSTEM SHALL HAVE DIRECTION OF FLOW ARROWS INDICATED ON THE PIPES.
2. PUBLIC POOLS SHALL HAVE A FLOW DIAGRAM OF THE POOL'S PIPING SYSTEM WITH OPERATION INSTRUCTIONS.
3. THE FLOW DIAGRAM AND INSTRUCTIONS SHALL BE AVAILABLE ON THE PREMISES AT ALL TIME.
4. ALL MECHANICAL ROOM FLOORS SHALL BE SLOPED A MIN ¼" PER FOOT TO A DRAIN PER CBC 3122B. SEE ARCHITECTURAL SHEETS FOR SPOT ELEVATIONS AND SLOPES.
5. ALL ELECTRICAL CONDUITS WITHIN MECHANICAL ROOM AND CHEMICAL ROOMS SHALL BE RIDGID NEMA 3R SUITABLE FOR CORROSIVE ATMOSPHERE.

THREE PHASE MOTOR LOADS AT 460V

SWIMMING POOL CIRCULATION PUMP: 50 HP @ 460V = 65 AMPS
SWIMMING POOL COOLER BOOSTER PUMP: 5 HP @ 460V = 7.6 AMPS
SWIMMING POOL COOLER FAN MOTORS TWO (2) @ 2 HP @ 460V = 7.0 AMPS

MEP COMPONENT ANCHORAGE NOTE

ALL MECHANICAL, PLUMBING, AND ELECTRICAL COMPONENTS SHALL BE ANCHORED AND INSTALLED PER THE DETAILS ON THE DSA - APPROVED CONSTRUCTION DOCUMENTS. THE FOLLOWING COMPONENTS SHALL BE ANCHORED OR BRACED TO MEET THE FORCE AND DISPLACEMENT REQUIREMENTS PRESCRIBED IN THE 2019 CBC SECTIONS 1617A.1.18 THROUGH 1617A.1.26 AND ASCE 7-16 CHAPTERS 13, 26 AND 30.

1. ALL PERMANENT EQUIPMENT AND COMPONENTS.
2. TEMPORARY, MOVABLE OR MOBILE EQUIPMENT THAT IS PERMANENTLY ATTACHED (E.G. HARD WIRED) TO THE BUILDING UTILITY SERVICES SUCH AS ELECTRICITY, GAS OR WATER. "PERMANENTLY ATTACHED" SHALL INCLUDE ALL ELECTRICAL CONNECTIONS EXCEPT PLUGS FOR 110/220 VOLT RECEPTACLES HAVING A FLEXIBLE CABLE.
3. TEMPORARY, MOVABLE OR MOBILE EQUIPMENT WHICH IS HEAVIER THAN 400 POUNDS OR HAS A CENTER OF MASS LOCATED 4 FEET OR MORE ABOVE THE ADJACENT FLOOR OR ROOF LEVEL THAT DIRECTLY SUPPORT THE COMPONENT IS REQUIRED TO BE RESTRAINED IN A MANNER APPROVED BY DSA.

THE FOLLOWING MECHANICAL AND ELECTRICAL COMPONENTS SHALL BE POSITIVELY ATTACHED TO THE STRUCTURE, BUT NEED NOT DEMONSTRATE DESIGN COMPLIANCE WITH THE REFERENCES NOTED ABOVE. THESE COMPONENTS SHALL HAVE FLEXIBLE CONNECTIONS PROVIDED BETWEEN THE COMPONENT AND ASSOCIATED DUCTWORK, PIPING, AND CONDUIT. FLEXIBLE CONNECTIONS MUST ALLOW MOVEMENT IN BOTH TRANSVERSE AND LONGITUDINAL DIRECTIONS:

A. COMPONENTS WEIGHING LESS THAN 400 POUNDS AND HAVING A CENTER OF MASS LOCATED 4 FEET OR LESS ABOVE THE ADJACENT FLOOR OR ROOF LEVEL THAT DIRECTLY SUPPORT THE COMPONENT.
B. COMPONENTS WEIGHING LESS THAN 20 POUNDS, OR IN THE CASE OF DISTRIBUTED SYSTEMS, LESS THAN 5 POUNDS PER FOOT, WHICH ARE SUSPENDED FROM A ROOF OR FLOOR OR HUNG FROM A WALL.

THE ANCHORAGE OF ALL MECHANICAL, ELECTRICAL AND PLUMBING COMPONENTS SHALL BE SUBJECT TO THE APPROVAL OF DESIGN PROFESSIONAL IN GENERAL RESPONSIBLE CHARGE OR STRUCTURAL ENGINEER DELEGATED RESPONSIBILITY AND ACCEPTANCE BY DSA. THE PROJECT INSPECTOR WILL VERIFY THAT ALL COMPONENTS AND EQUIPMENT HAVE BEEN ANCHORED IN ACCORDANCE WITH ABOVE REQUIREMENTS.

PIPING, DUCTWORK, AND ELECTRICAL DISTRIBUTION SYSTEM BRACING NOTE

PIPING, DUCTWORK, AND ELECTRICAL DISTRIBUTION SYSTEMS SHALL BE BRACED TO COMPLY WITH THE FORCES AND DISPLACEMENTS PRESCRIBED IN ASCE 7-16 SECTION 13.3 AS DEFINED IN ASCE 7-16 SECTION 13.6.5, 13.6.6, 13.6.7, 13.6.8; AND 2019 CBC, SECTIONS 1617A.1.24, 1617A.1.25, 1617A.1.26.

THE METHOD OF SHOWING BRACING AND ATTACHMENTS TO THE STRUCTURE FOR THE IDENTIFIED DISTRIBUTION SYSTEM ARE AS NOTED BELOW. WHEN BRACING AND ATTACHMENTS ARE BASED ON A PREAPPROVED INSTALLATION GUIDE (E.G., OSHPD OPM FOR 2019 CBC OR LATER) COPIES OF THE BRACING SYSTEM INSTALLATION GUIDE OR MANUAL SHALL BE AVAILABLE IN THE JOBSITE PRIOR TO THE START OF AND DURING THE HANGING AND BRACING OF THE DISTRIBUTION SYSTEMS. THE STRUCTURAL ENGINEER OF RECORD SHALL VERIFY THE ADEQUACY OF THE STRUCTURE TO SUPPORT THE HANGER AND BRACE LOADS.

MECHANICAL PIPING (MP), MECHANICAL DUCTS (MD), PLUMBING PIPING (PP), ELECTRICAL DISTRIBUTION SYSTEMS (E):
MP ☒ MD☐ PP☒ E☐ 1. SHALL COMPLY WITH THE APPLICABLE OSHPD PRE-APPROVAL (OPM #) OPM #0043-13

MECHANICAL ANCHORAGE

1. EXPANSION OR WEDGE ANCHORS INTO CONCRETE: HILTI KB TZ 2 (ICC ESR-4266) TO BE INSTALLED IN ACCORDANCE WITH ICC REPORT AND MANUFACTURER'S RECOMMENDATIONS.
2. EXPANSION OR WEDGE ANCHORS INTO MASONRY: HILTI KB TZ 2 (ICC ESR-4561) TO BE INSTALLED IN ACCORDANCE WITH ICC REPORT AND MANUFACTURER'S RECOMMENDATIONS.
3. FASTENERS SHALL BE STAINLESS STEEL FOR EXTERIOR USE OR WHEN EXPOSED TO WEATHER. PROVIDE GALVANIZED CARBON STEEL ANCHORS AT OTHER LOCATIONS, UNLESS OTHERWISE NOTED.
4. IF REINFORCEMENT IS ENCOUNTERED DURING DRILLING, ABANDON AND SHIFT THE HOLE LOCATION TO AVOID THE REINFORCEMENT. PROVIDE A MINIMUM OF 2 ANCHOR DIAMETERS OR 1 INCH, WHICHEVER IS LARGER, OF SOUND CONCRETE BETWEEN THE DOWEL AND THE ABANDONED HOLE. FILL THE ABANDONED HOLE WITH NON-SHRINK GROUT WITH CONCRETE STRENGTH EQUAL TO OR GREATER THAN BASE MATERIAL. IF THE ANCHOR OR DOWEL MAY NOT BE SHIFTED AS NOTED ABOVE, THE STRUCTURAL ENGINEER WILL DETERMINE A NEW LOCATION.
5. LOCATE REINFORCEMENT AND CONFIRM FINAL ANCHOR LOCATIONS PRIOR TO FABRICATING PLATES, MEMBERS, OR OTHER STEEL ASSEMBLIES ATTACHED WITH MECHANICAL ANCHORS.
6. ANCHORS SHALL BE PROOF-TESTED BY OWNER'S TESTING AND INSPECTION AGENCY.
7. TEST ANCHORS NO SOONER THAN 24 HOURS AFTER INSTALLATION.
8. APPLY TEST LOAD BY ANY METHOD THAT WILL EFFECTIVELY MEASURE THE TENSION OF THE ANCHOR SUCH AS DIRECT PULL WITH A HYDRAULIC JACK, TORQUE WRENCH, OR CALIBRATED SPRING LOADING DEVICES, ETC.
9. REACTION LOADS FROM TEST FIXTURES MAY BE APPLIED CLOSE TO THE ANCHOR BEING TESTED, PROVIDED THE ANCHOR IS NOT RESTRAINED FROM WITHDRAWING BY A BASE PLATE OR OTHER FIXTURE. IF RESTRAINT IS FOUND, LOOSEN AND SHIM OR REMOVE THE FIXTURE PRIOR TO TESTING.
10. UNLESS OTHERWISE NOTED, PROVIDE MINIMUM EMBEDMENT OF ANCHORS AS SHOWN IN TABLES BELOW.
11. TEST 50% OF ANCHORS PER ONE OF THE FOLLOWING METHODS AND IN ACCORDANCE WITH THE VALUES SHOWN IN THE TABLE:
    A. HYDRAULIC RAM METHOD: APPLY PROOF TEST LOAD WITHOUT REMOVING THE NUT. IF IT IS NOT POSSIBLE TO TEST WITH THE NUT INSTALLED, REPLACE THE NUT WITH A THREADED COUPLER TO THE LOAD. ANCHOR IS ACCEPTABLE IF NO MOVEMENT IS OBSERVED AT THE TEST LOAD. MOVEMENT MAY BE DETERMINED WHEN THE WASHER UNDER THE NUT BECOMES LOOSE.
    B. TORQUE WRENCH METHOD: TEST ANCHORS TO THE TORQUE LOAD INDICATED IN THE TABLE WITH ONE-HALF TURN OF THE NUT.
12. IF ANY ANCHOR FAILS TESTING, REPLACE ANCHOR AND TEST ADDITIONAL ANCHORS OF THE SAME CATEGORY NOT PREVIOUSLY TESTED UNTIL TWENTY (20) CONSECUTIVE TESTS PASS, THEN RESUME INITIAL TESTING FREQUENCY. CCD WILL BE REQUIRED.

WEDGE, EXPANSION OR ADHESIVE ANCHOR EMBEDMENT DEPTH AND TEST LOAD

SIZE	MIN. EMBED	HILTI KB TZ 2 (SS) ANCHORS IN CONCRETE		KB TZ 2 (SS) ANCHORS IN CMU			HILTI HIT-HY 200 ADHESIVE ANCHORS IN CONCRETE		
		TENSION LOAD (LBS)	TORQUE LOAD (FT-LBS)	MIN. EMBED	TENSION LOAD (LBS)	TORQUE LOAD (FT-LBS)	MIN. EMBED	PULL TEST LOAD (LBS)	TORQUE LOAD (FT-LBS)
¼" DIA.	1½"	800	10	1¾"	145	6	-	-	-
⅜" DIA.	2½"	1,500	25	3"	540	15	3"	2,910	15
½" DIA.	3¼"	3,000	40	3¾"	640	25	4"	5,165	30
⅝" DIA.	3¼"	4,900	60	4½"	940	35	5"	8,245	60
¾" DIA.	3¾"	6,300	110	5½"	1,385	50	6"	10,150	100

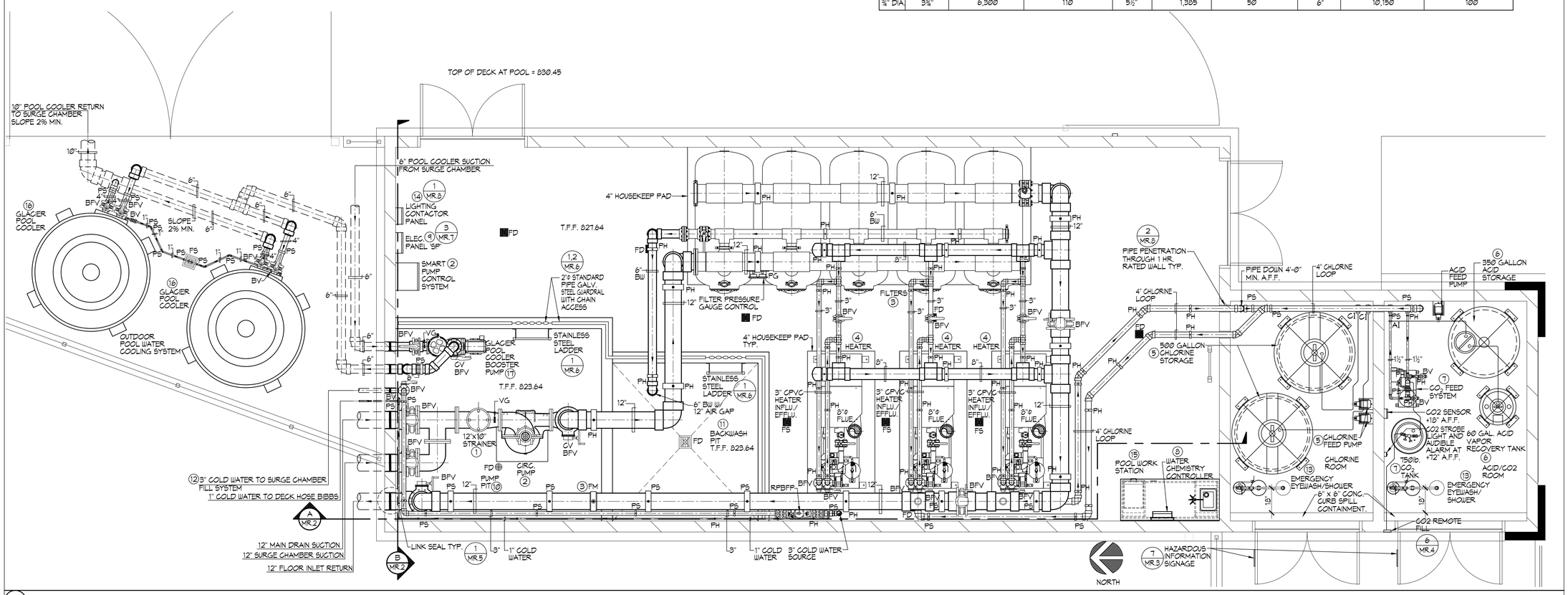

1 **MECHANICAL ROOM LAYOUT PLAN** ⅜"=1'-0"

IDENTIFICATION STAMP
DIV. OF THE STATE ARCHITECT
APP: 03-122664 INC:
REVIEWED FOR
SS ☑ FLS ☑ ACS ☑
DATE: 05/12/2023

pjhm architects

LICENSED ARCHITECT RICHARD W. RIVERA No. C-25185 REN. 02/28 STATE OF CALIFORNIA

AQUATIC DESIGN GROUP
2226 Faraday Ave, Carlsbad, CA 92008
AquaticDesignGroup.com
760.438.8400

LICENSED ARCHITECT GARY S. ROBERTS C-33802 REN. 07/31/23 STATE OF CALIFORNIA

LA Phone: 213.278.0172 • Web: pjhm.com
LA Office: 837 Traction Avenue, #410, Los Angeles, CA 90013
SD Phone: 760.730.5527 • OC Phone: 949.496.6191 • SD Office: 804 Pier View Way #103, Oceanside, CA 92054
OC Office: 24461 Ridge Route Drive #100, Laguna Hills, CA 92653

HIGHLAND HIGH SCHOOL
50M POOL & AQUATICS CENTER

KERN HIGH SCHOOL DISTRICT

MECHANICAL ROOM LAYOUT PLAN

MR.1

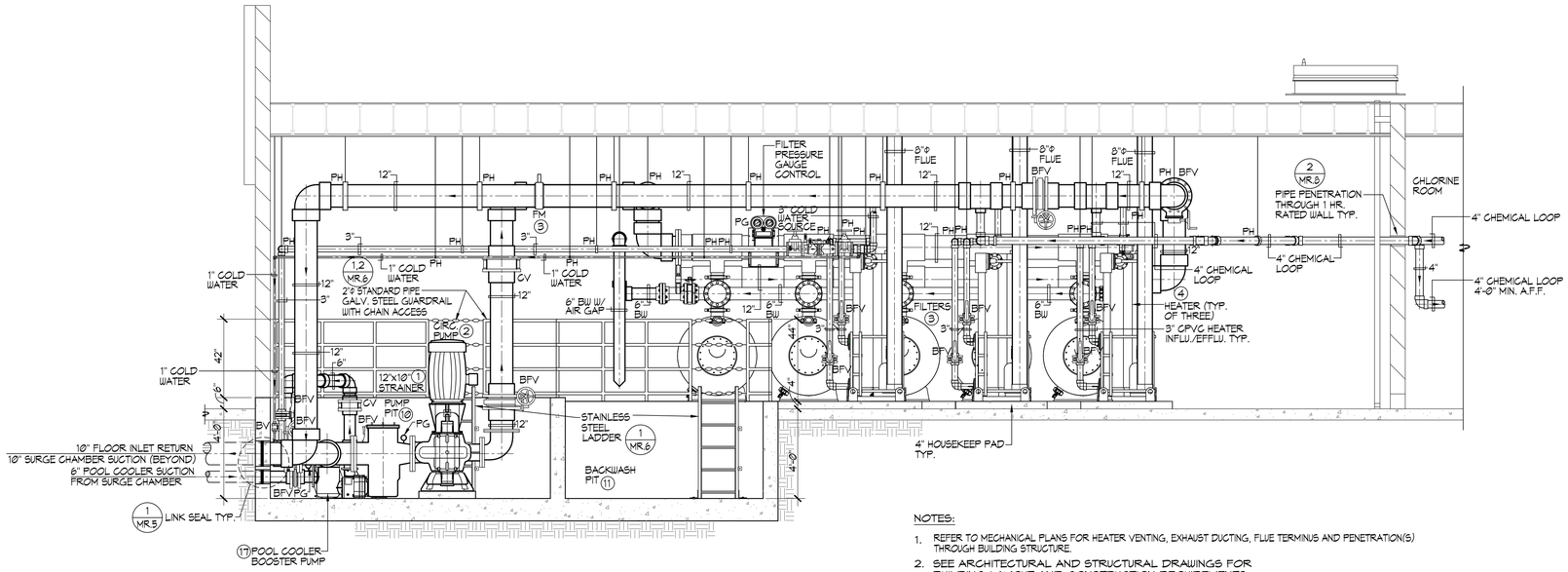

NOTES:

1. REFER TO MECHANICAL PLANS FOR HEATER VENTING, EXHAUST DUCTING, FLUE TERMINUS AND PENETRATION(S) THROUGH BUILDING STRUCTURE.
2. SEE ARCHITECTURAL AND STRUCTURAL DRAWINGS FOR BUILDING LAYOUT AND CONSTRUCTION REQUIREMENTS.
3. SEE SHEET MR.1 FOR EQUIPMENT LIST.

A **MECHANICAL ROOM SECTION** 3/8"=1'-0"

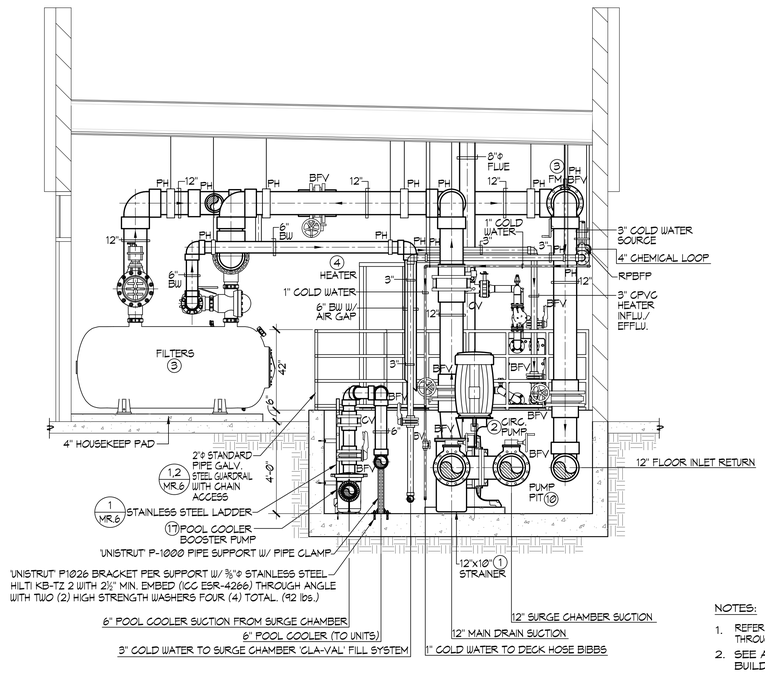

NOTES:

1. REFER TO MECHANICAL PLANS FOR HEATER VENTING, EXHAUST DUCTING, FLUE TERMINUS AND PENETRATION(S) THROUGH BUILDING STRUCTURE.
2. SEE ARCHITECTURAL AND STRUCTURAL DRAWINGS FOR BUILDING LAYOUT AND CONSTRUCTION REQUIREMENTS.
3. SEE SHEET MR.1 FOR EQUIPMENT LIST.

B **MECHANICAL ROOM SECTION** 3/8"=1'-0"

IDENTIFICATION STAMP
DIV. OF THE STATE ARCHITECT
APP: 03-122664 INC:
REVIEWED FOR
SS ☑ FLS ☑ ACS ☑
DATE: 05/12/2023

pjhm architects

LICENSED ARCHITECT THOMAS W. KRUSE NO. C15585 REN. 02/25 STATE OF CALIFORNIA

AQUATIC DESIGN GROUP
2226 Faraday Ave. Carlsbad, CA 92008
AquaticDesignGroup.com
760.438.8400

LICENSED ARCHITECT GEORGY S. FERRELL C-35802 REN. 07/31/23 STATE OF CALIFORNIA

HIGHLAND HIGH SCHOOL
50M POOL & AQUATICS CENTER

KERN HIGH SCHOOL DISTRICT

MECHANICAL ROOM SECTIONS

MR.2

OC Office: 24461 Ridge Route Drive #100, Laguna Hills, CA 92653 • OC Phone: 949.496.6191 • SD Office: 804 Pier View Way #103, Oceanside, CA 92054 • SD Phone: 760.730.5527 • LA Office: 837 Traction Avenue, #410, Los Angeles, CA 90013 • LA Phone: 213.278.0172 • Web: pjhm.com

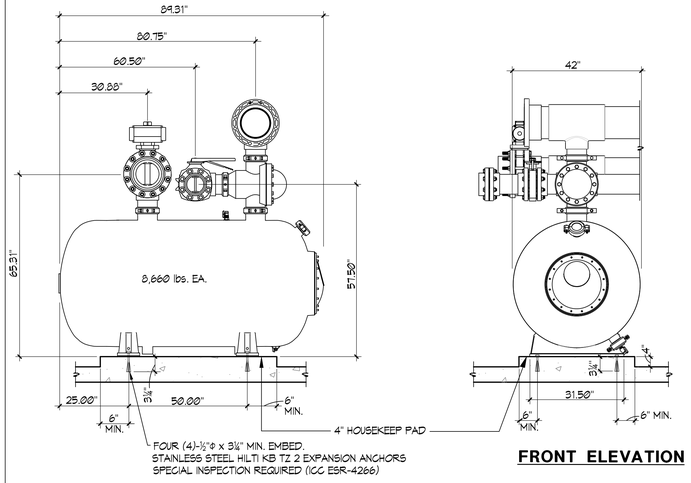

SIDE ELEVATION **FRONT ELEVATION**

1 FILTER ANCHORAGE NO SCALE

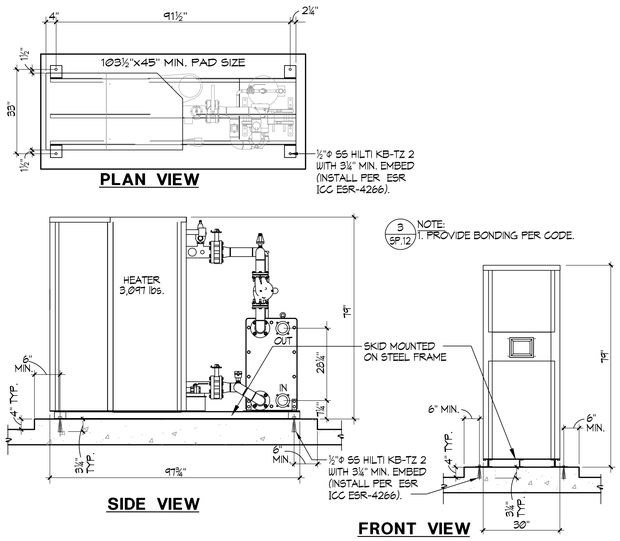

PLAN VIEW **SIDE VIEW** **FRONT VIEW**

2 HEATER ANCHORAGE NO SCALE

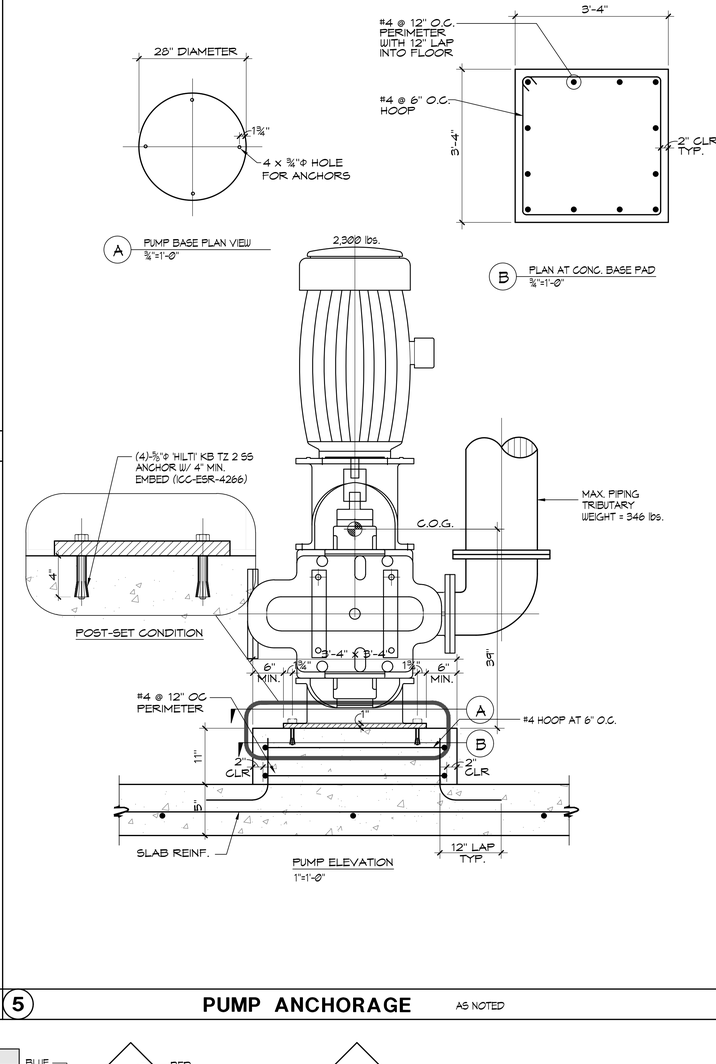

5 PUMP ANCHORAGE AS NOTED

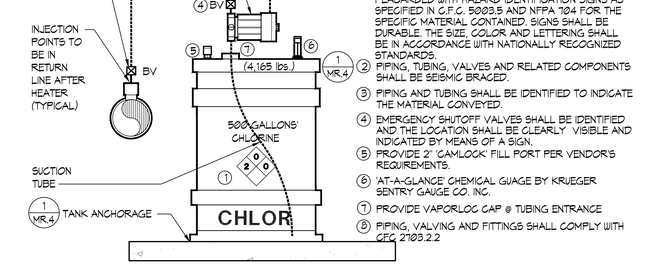

3 SODIUM HYPOCHLORITE FEED SCHEMATIC NO SCALE

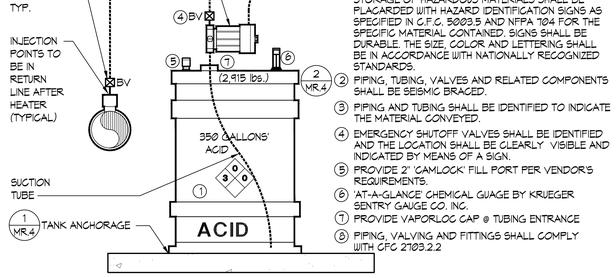

4 MURIATIC ACID FEED SCHEMATIC NO SCALE

NOTES:
1. SEAL NON-VENTED MANWAY AND PERMANENTLY CLOSE.
2. PROVIDE CAMLOCK FITTING FOR FILL HOSE.
3. PROVIDE 2" BULKHEAD FITTING.
4. PROVIDE 2" BALL CHECK VALVE.
5. PROVIDE DOUBLE WALLED DUAL CONTAINMENT TANK.
6. PROVIDE ¾"x100' HOSE W/ NON-CORROSIVE ENDS.
7. PROVIDE 2" BULKHEAD FITTING WITH 'VAPORLOC' SYSTEM FOR FEED PUMP SUCTION LINES(5).
8. PROVIDE 'AT-A-GLANCE CHEMICAL GAUGE' BY KRUEGER SENTRY GAUGE CO. INC.

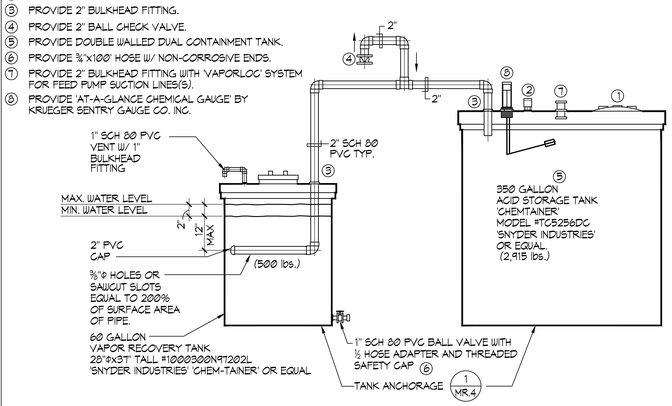

6 VAPOR RECOVERY TANK NO SCALE

CHEMICAL CLASSIFICATION TABLE

COMMON NAME	CHEMICAL NAME	% COMP.	CAS #	FORM	QUANT STORED (NOT USED)	QUANT. IN USE (USE-CLOSED)	MAXIMUM ALLOWABLE QUANTITY	LOCATION (STORAGE & USE)	HAZ. CLASSES	JUSTIFICATION
SODIUM HYPOCHLORITE	SODIUM HYPOCHLORITE	12.5%	7681-52-9	LIQUID	0 GAL.	500 GAL.	500 GAL.	CHEM. ROOM	CORROSIVE LIQUID	MSDS
MURIATIC ACID	HYDROCHLORIC ACID	25%	7647-01-0	LIQUID	0 GAL.	350 GAL.	500 GAL.	CHEM. ROOM	CORROSIVE LIQUID	MSDS
CARBON DIOXIDE	CARBON DIOXIDE	100%	124-39-9	LIQUID	0 lbs.	600 lbs.	686 lbs.	CHEM. ROOM	CRYOGENIC	MSDS

QUANTITIES OF CHEMICALS DO NOT EXCEED THE QUANTITIES LISTED IN CBC TABLES 307.1 (1) AND 307.1 (2).
FOR CARBON DIOXIDE GAS SEE TABLE 1.12.8(b) OF THE NFPA-1, 6,000 FT^3 ALLOWABLE OR 686 lbs. STORAGE PER CONTAINED AREA
PROVIDE HARD WIRED CO_2 DETECTOR 'ANALOX SENSOR TECHNOLOGY' MODEL #AP1 KIT SENSOR AND STROBE UNITS 120V HARD WIRED W/ STROBE LIGHT AND AUDIBLE ALARM. SENSOR MOUNTED 18 INCHES A.F.F. AND ALARM LEVEL BETWEEN 70-76 INCHES AND WITHIN VISIBLE EYESIGHT OF DOOR. TO BE SET TO DETECT CO2 GAS IN LEVELS IN EXCESS OF THE PEL. PROVIDE IN EACH ROOM CONTAINING CO_2.

RATING EXPLANATION GUIDE

RATING	HEALTH HAZARD	FLAMMABILITY HAZARD	REACTIVITY HAZARD	SPECIFIC HAZARD	
4	CAN BE LETHAL	EXTREMELY FLAMMABLE. IGNITES AT BELOW 73° F.	MAY EXPLODE AT NORMAL TEMPERATURES AND PRESSURES	OXIDIZER:	OX
				ACID:	ACID
3	CAN CAUSE SERIOUS OR PERMANENT INJURY	IGNITES AT ABOVE 73° F, BELOW 100° F.	MAY EXPLODE AT HIGH TEMPERATURES OR SHOCK	CORROSIVE:	COR
2	CAN CAUSE TEMPORARY INCAPACITATION OR RESIDUAL INJURY	IGNITES AT ABOVE 100° F, BELOW 200° F.	VIOLENT CHEMICAL CHANGE AT HIGH TEMPERATURES OR PRESSURES	ALKALI:	ALK
				USE NO WATER:	W
1	CAN CAUSE SIGNIFICANT IRRITATION	IGNITES AT ABOVE 200° F.	NORMALLY STABLE. HIGH TEMPERATURES MAKE UNSTABLE	RADIATION HAZARDS:	☢
				POLYMERIZES:	P
0	NO HAZARD	WILL NOT BURN	STABLE		

NOTES:
1. CONFIRM SIGNAGE WITH LOCAL FIRE MARSHAL AND/OR BUILDING CODES PRIOR TO INSTALLATION. SIGNS SHALL CONFORM TO NFPA 704.
2. SIGNS SHALL BE SIZES AND COLORS PER CODE MOUNTED AT +60" A.F.F. ON DOORS AT CHEMICAL ROOMS.

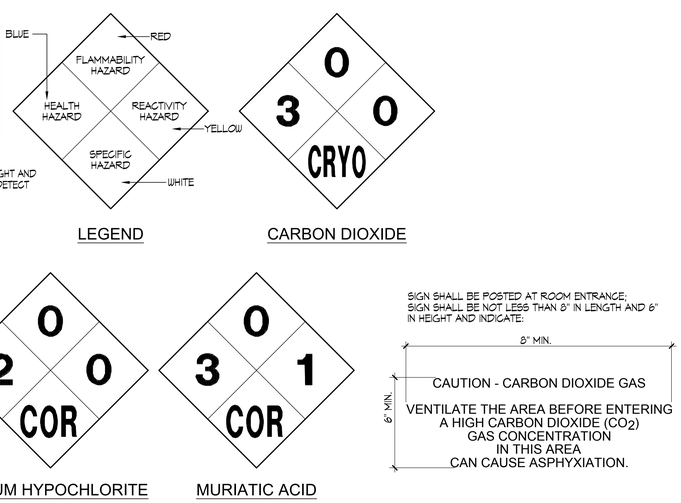

7 HAZARDOUS INFORMATION SIGNAGE NO SCALE

IDENTIFICATION STAMP
DIV. OF THE STATE ARCHITECT
APP: 03-122664 INC:
REVIEWED FOR
SS ☑ FLS ☑ ACS ☑
DATE: 05/12/2023

pjhm architects
LA Phone: 213.278.0172 • Web: pjhm.com
LICENSED ARCHITECT THOMAS W. KRUSE No. C15585 REN. 02/25 STATE OF CALIFORNIA
AQUATIC DESIGN GROUP
2226 Faraday Ave. Carlsbad, CA 92008
AquaticDesignGroup.com
760.438.8400
LICENSED ARCHITECT GREGORY S. ATKINS C-25802 REN. 07/31/25 STATE OF CALIFORNIA
LA Office: 837 Traction Avenue, #410, Los Angeles, CA 90013 • SD Office: 804 Pier View Way #103, Oceanside, CA 92054 • SD Phone: 760.730.5527
OC Office: 24461 Ridge Route Drive #100, Laguna Hills, CA 92653 • OC Phone: 949.496.6191

HIGHLAND HIGH SCHOOL
50M POOL & AQUATICS CENTER
KERN HIGH SCHOOL DISTRICT

DETAILS

MR.3

8/29/2023 7:57:55 AM

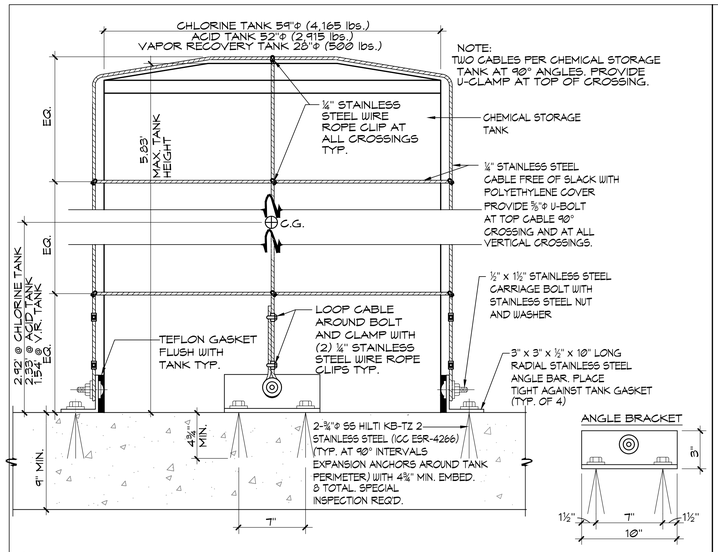

1 CHEMICAL TANK ANCHOR (TYP. 3 TANKS) NO SCALE

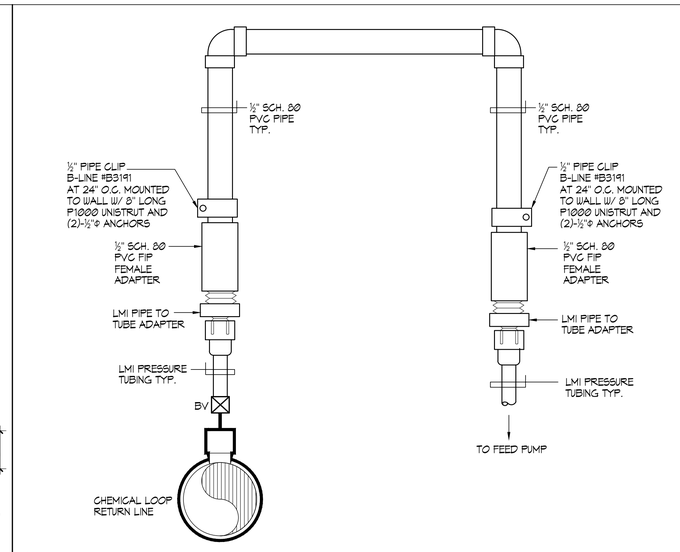

2 CHEMICAL FEED PIPING DETAIL NO SCALE

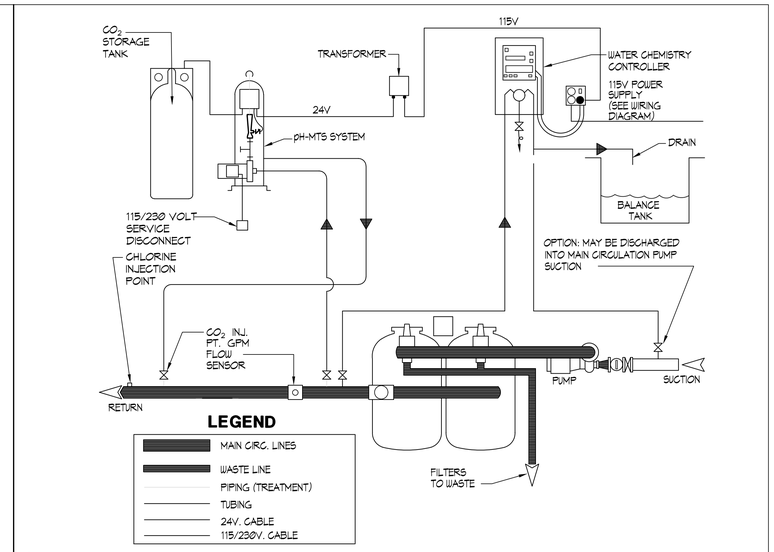

3 TYPICAL CARBON DIOXIDE pH-MTS INSTALLATION NO SCALE

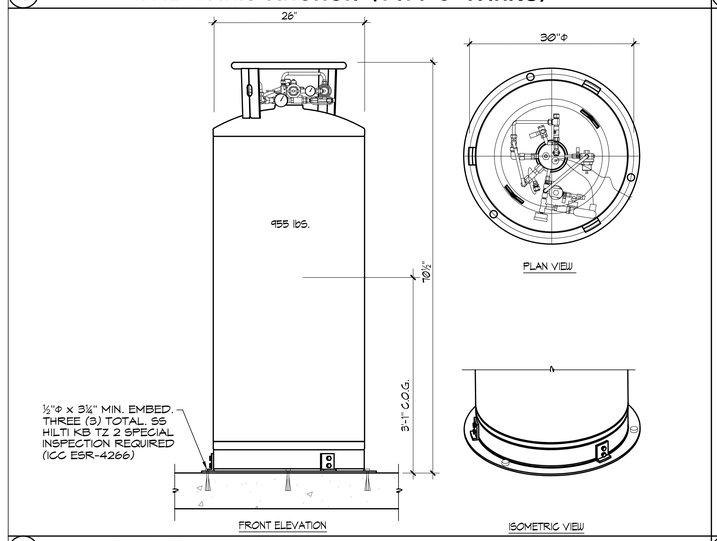

4 CO2 TANK ANCHORAGE DETAIL NO SCALE

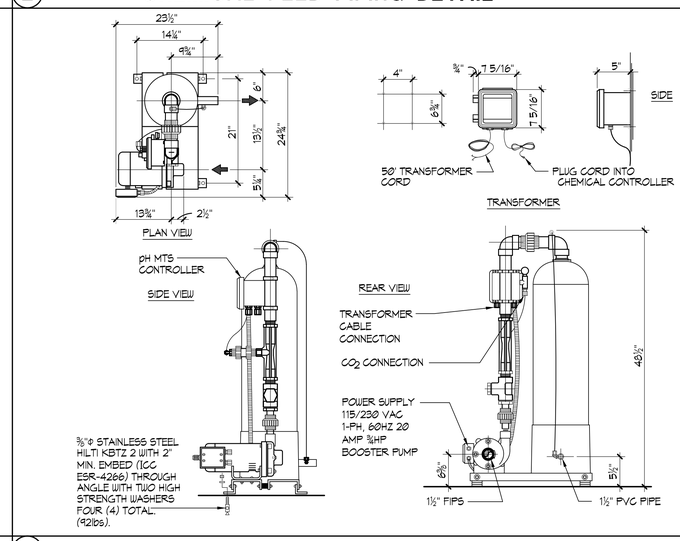

5 CARBON DIOXIDE pH MTS CONTROLLER NO SCALE

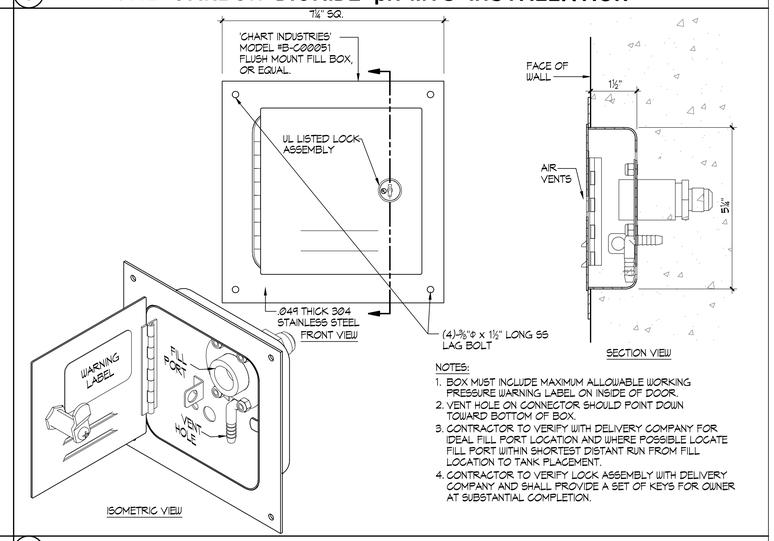

6 C02 FLUSH MOUNT FILL BOX ½"=1"

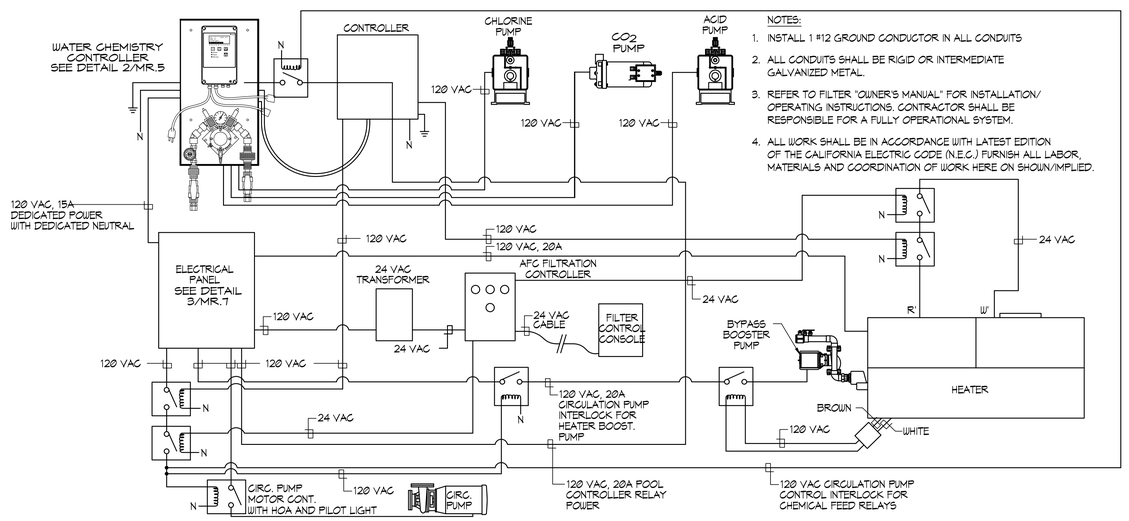

7 POOL MECHANICAL ELECTRICAL INTERCONNECTION DIAGRAM NO SCALE

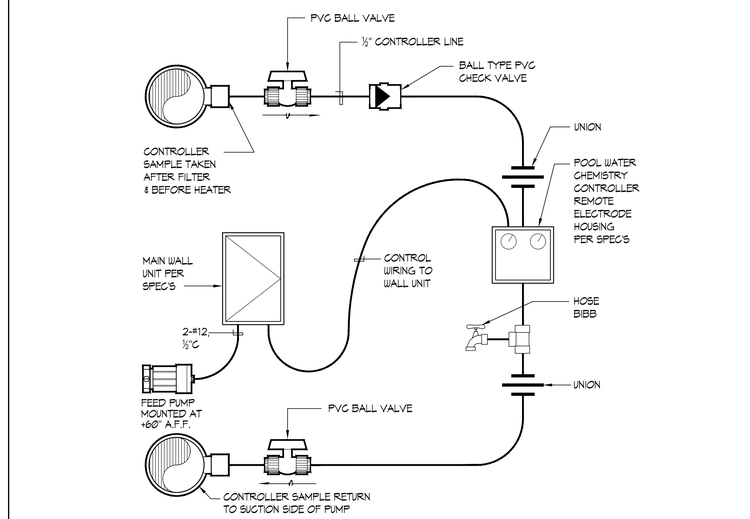

8 WATER CHEMISTRY CONTROLLER SCHEMATIC NO SCALE

IDENTIFICATION STAMP
DIV. OF THE STATE ARCHITECT
APP: 03-122664 INC:
REVIEWED FOR
SS ☑ FLS ☑ ACS ☑
DATE: 05/12/2023

pjhm architects

LICENSED ARCHITECT
THOMAS W. KRUSE
No. C15585
REN. 02/25
STATE OF CALIFORNIA

AQUATIC DESIGN GROUP
2226 Faraday Ave. Carlsbad, CA 92008
AquaticDesignGroup.com
760.438.8400

LICENSED ARCHITECT
GREGORY S. ATKINS
C-25802
REN. 07/31/25
STATE OF CALIFORNIA

HIGHLAND HIGH SCHOOL
50M POOL & AQUATICS CENTER
KERN HIGH SCHOOL DISTRICT

DETAILS

MR.4

OC Office: 24461 Ridge Route Drive #100, Laguna Hills, CA 92653 • OC Phone: 949.496.6191 • SD Office: 804 Pier View Way #103, Oceanside, CA 92054 • SD Phone: 760.730.5527 • LA Office: 837 Traction Avenue, #410, Los Angeles, CA 90013 • LA Phone: 213.278.0172 • Web: pjhm.com

MR.MP.01.01.01 7/7/2021 10:30:16 AM

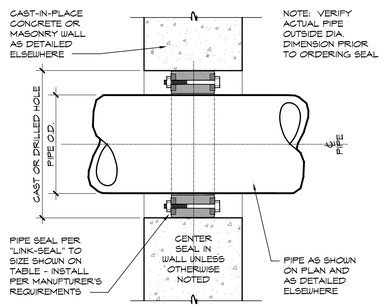

PIPE SIZE (NOMINAL)	OUTSIDE DIAMETER (PIPE O.D.)	CAST OR DRILLED CONCRETE HOLE DIA. (I.D.)	LINK SEAL SIZE NO.	NO. OF LINKS PER SEAL
½"	0.840	2.0	LS-200	4
¾"	1.050	2.5	LS-275	5
1"	1.315	3.0	LS-300	4
1¼"	1.660	3.0	LS-275	7
1½"	1.900	3.5	LS-300	5
2"	2.375	4.0	LS-300	6
2½"	2.875	4.0	LS-200	9
3"	3.50	5.0	LS-300	8
3½"	4.00	6.0	LS-325	5
4"	4.50	6.0	LS-300	10
5"	5.563	8.0	LS-425	6
6"	6.625	10.0	LS-475	10
8"	8.625	12.0	LS-475	12
10"	10.75	14.0	LS-400	10
12"	12.75	16.0	LS-400	12
14"	14.00	16.0	LS-325	15
16"	16.00	18.0	LS-325	17
18"	18.00	20.0	LS-500	16
20"	20.00	25.0	LS-500	13
22"	22.00	27.0	LS-500	19
24"	24.00	29.0	LS-500	21
26"	26.00	31.0	LS-500	23
28"	28.00	33.0	LS-500	24
30"	30.00	35.0	LS-500	26
32"	32.00	37.0	LS-500	28
34"	34.00	39.0	LS-500	29
36"	36.00	41.0	LS-500	30

1 PIPE SEAL TO WALL / FLOOR

NO SCALE

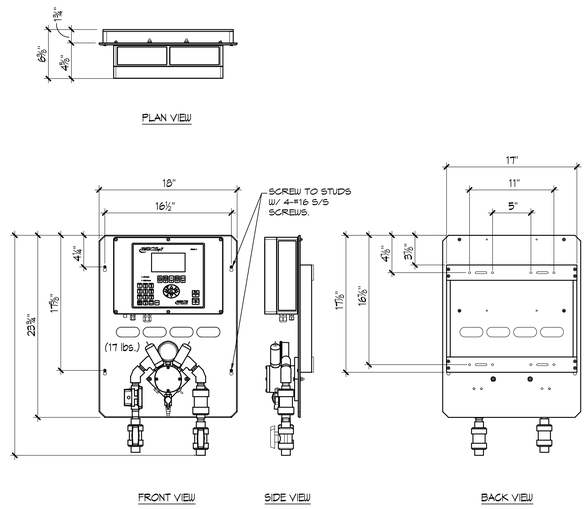

2 BECSYS 7 WATER CHEMISTRY CONTROLLER

1½"=1'-0"

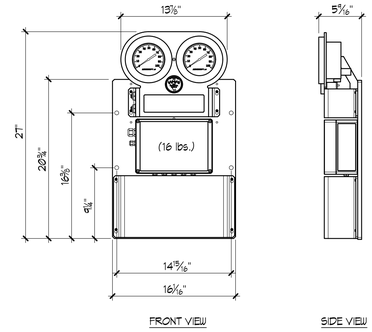

3 BECSYS FILTER INTERFACE SYSTEM

1½"=1'-0"

RELAY LEGEND
RELAY 1 = pH FEED
RELAY 2 = CHLORINE FEED
RELAY 3 = ALARM OUTPUT
RELAY 4 = HEATER
RELAY 5 = SENSOR WASH
RELAY 6 = FILTER BACKWASH OUTPUT
RELAY 7 = RECIRC PUMP

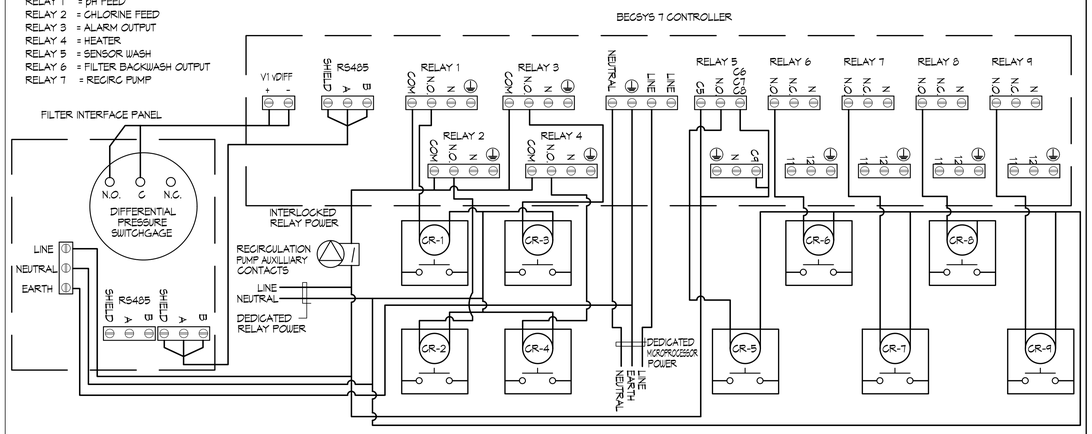

4 BECSYS 7 CONTROLLER

NO SCALE

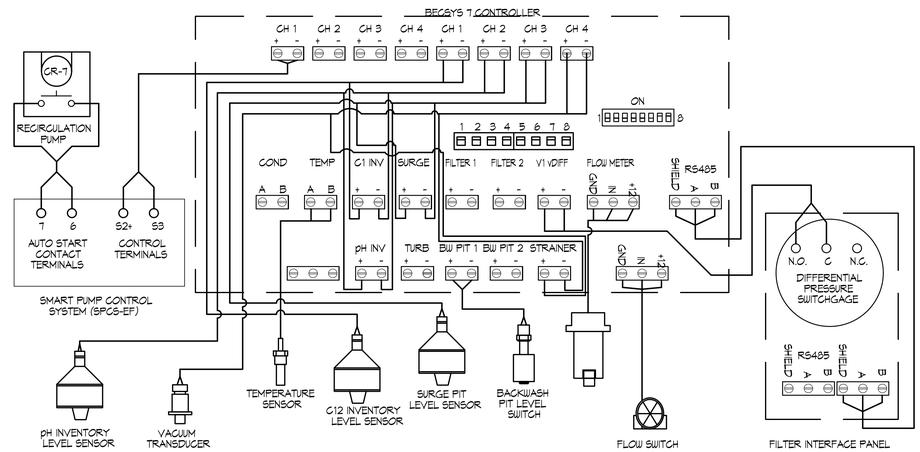

5 BECSYS 7 CONTROLLER

NO SCALE

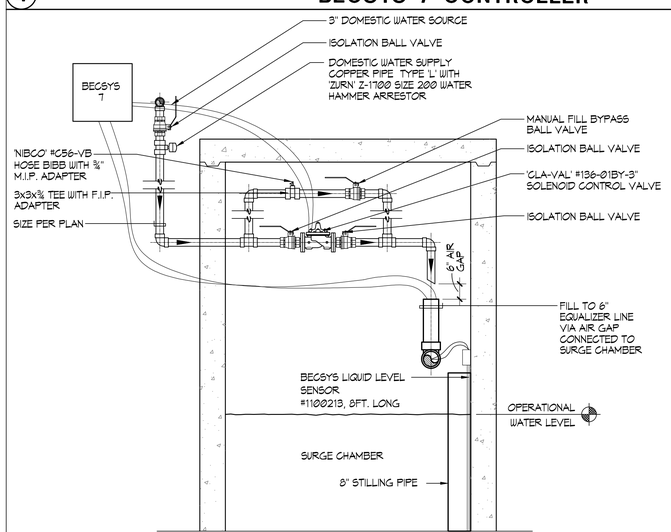

6 AUTOMATIC/MANUAL WATER MAKE-UP SCHEMATIC

NO SCALE

DESIGNATION: 'SP'
VOLTAGE: 120/208V 3PH 4W
200AMP ☒MAIN BREAKER ☐MAIN LUG
☐RECESSED ☒SURFACE
LOCATION: MECHANICAL EQUIP. RM.
MINIMUM DEVICE ☒10,000 ☐14,000
A.I.C. RATING
PANELBOARD KEY NOTES ① ○ ○ ○

DESCRIPTION:	C/B	CIR NO.	φ A	φ B	φ C	CIR NO.	C/B	DESCRIPTION:
SP UNDERWATER LIGHTS	① 20/2	1	696 1200			2	20/1	SP FILTER AFC
		3		696 1200		4		SP FILTER PRESS. AMP.
		5			696 1200	6		SP WATER CHEM. CONTROL
		7	696 360			8		SP WATER CHEM. RELAY
		9		696 360		10		SP CIRC. PUMP INTERCON.
		11			522 360	12		SP CIRC. PUMP MTR. CONT.
SP TIMING SYS. DECK RECEPT.		13	720 1440			14		SP HEATER
		15		720 1440		16		SP HEATER
		17			720 1440	18		SP HEATER
SP TIMING SYS. SCOREBOARD		19	720 720			20		SP FILTER PRIORITY VALVE
		21		720 960		22		SP CHLORINE FEED
		23			720 960	24		
		25	720 1056			26	20/2	SP CO2 FEED
		27		720 1056		28		
		29			720 720	30	20/1	SPARE ①
		31	720			32		SPACE
		33		720		34		
		35			720	36		
		37	720			38		
POOL COOLER SUMP		39		720		40		
POOL COOLER SUMP		41			720	42		
TOTAL PER PHASE			9,768	10,008	9,498			11,556 ÷ 120V = 97 AMPS
+ 25% L.C.L.			1,728	1,548	1,684			
TOTAL			11,496	11,556	11,182			

① GFI CIRCUIT SP = SWIMMING POOL

7 PANEL SCHEDULE

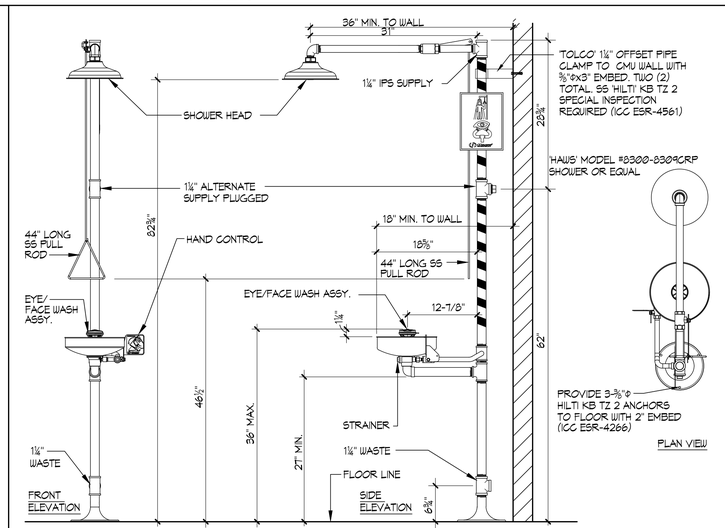

8 TYPICAL EYEWASH/SHOWER DETAIL

NO SCALE

IDENTIFICATION STAMP
DIV. OF THE STATE ARCHITECT
APP: 03-122664 INC:
REVIEWED FOR
SS ☑ FLS ☑ ACS ☑
DATE: 05/12/2023

pjhm architects
LICENSED ARCHITECT GEORG W. KRUSE No. C15585 REN. 02/25 STATE OF CALIFORNIA
AQUATIC DESIGN GROUP
2226 Faraday Ave. Carlsbad, CA 92008
AquaticDesignGroup.com
760.438.8400
LICENSED ARCHITECT GREGORY S. ATKIN C-25802 REN. 07/31/25 STATE OF CALIFORNIA
LA Office: 837 Traction Avenue, #410, Los Angeles, CA 90013 • LA Phone: 213.278.0172 • Web: pjhm.com
SD Office: 804 Pier View Way #103, Oceanside, CA 92054 • SD Phone: 949.496.6191 • OC Phone: 760.730.5527
OC Office: 24461 Ridge Route Drive #100, Laguna Hills, CA 92653

HIGHLAND HIGH SCHOOL
50M POOL & AQUATICS CENTER
KERN HIGH SCHOOL DISTRICT

DETAILS

MR.5

10/31/2023 7:10:25 AM

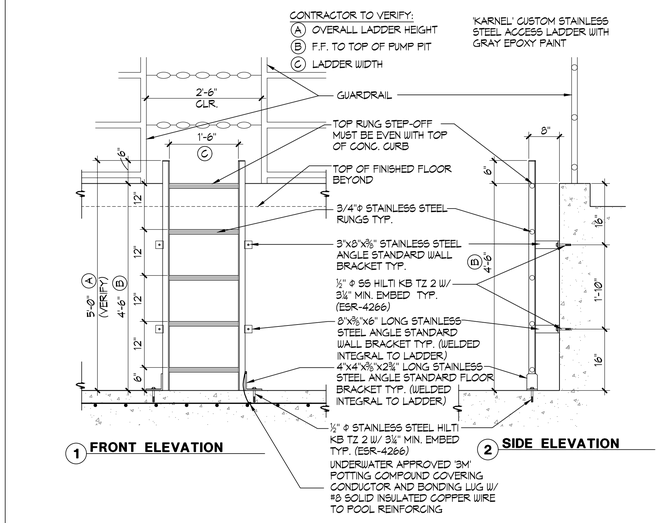

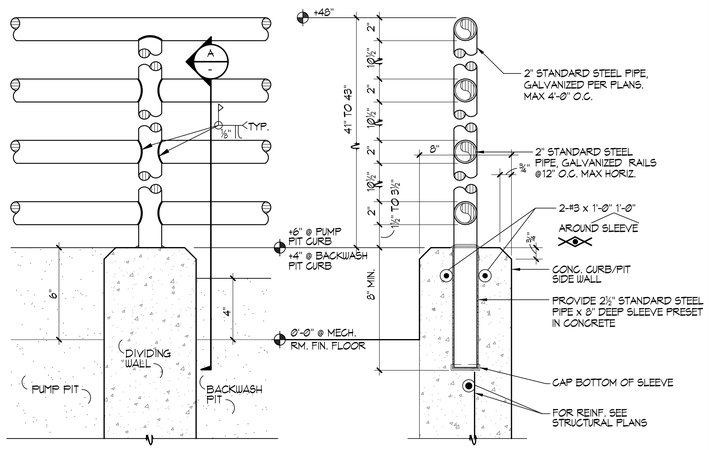

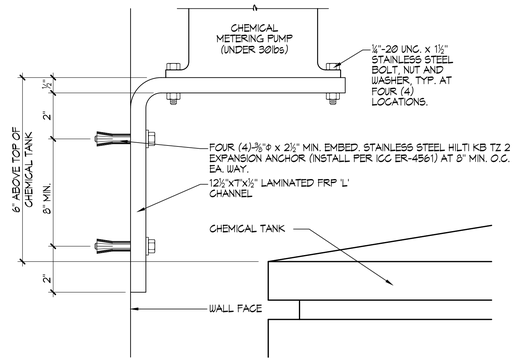

1 PUMP PIT ACCESS LADDER ¾"=1'-Ø"

2 PIT GUARD RAIL 3"=1'-Ø"

3 CHEMICAL PUMP SHELF 6"=1'-Ø"

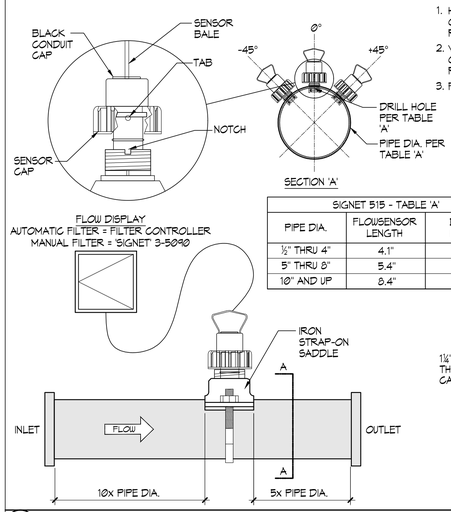

SIGNET 515 - TABLE 'A'		
PIPE DIA.	FLOWSENSOR LENGTH	DRILL HOLE
½" THRU 4"	4.1"	1 7/16"
5" THRU 8"	5.4"	2¼"
10" AND UP	8.4"	2¼"

NOTES:
1. HORIZONTAL PIPE RUNS: MOUNT SENSOR IN -45°, Ø°, OR +45° POSITION PER MANUFACTURER'S RECOMMENDATIONS.
2. VERTICAL PIPE RUNS: MOUNT SENSOR IN ANY ORIENTATION PER MANUFACTURER'S RECOMMENDATIONS.
3. FLOW SENSOR LOCATION PER PLAN

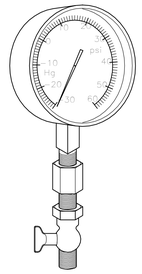

4½" S/S CASED LIQUID FILLED PRESSURE GAUGES SHALL HAVE A DIAL RANGE PRESSURE OF 60psi AND VACUUM RANGE OF 30" Hg THE MINOR GRADUATIONS SHALL HAVE A PRESSURE OF 2psi AND VACUUM OF 2" Hg, ¼" NPT PER SPECIFICATIONS.

SNUBBER

'PETCOCK' MODEL #A10, BRASS

NOTES:
1. PRESSURE GAUGES SHALL BE INSTALLED BY MEANS OF DRILLING AND TAPPING PIPE TO BE MONITORED. THE GAUGE SHALL THEN BE THREADED INTO THE PIPE. PROVIDE WITH SNUBBER AND PET COCK.
2. GAUGE MAY BE USED WHEREVER CRUCIAL VACUUM OR PRESSURE READINGS ARE ESSENTIAL.

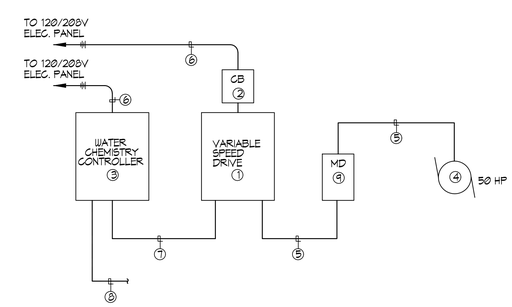

NOTES:
1. VARIABLE SPEED DRIVE MOTOR CONTROL CABINET, SEE PLANS AND SPECIFICATIONS.
2. ENCLOSED CIRCUIT BREAKER, SEE SINGLE LINE DIAGRAM.
3. WATER CHEMISTRY/FILTER CONTROL UNIT, SEE PLANS.
4. CONNECT TO CIRCULATION PUMP MOTOR, SEE PLANS.
5. MOTOR FEEDERS, SEESINGLE LINE DIAGRAM.
6. 120 VOLT BRANCH CIRCUITS, SEE PLANS.
7. ¾"C, (4) #12, (1) #12 GND. (120 VOLT CONTROL WIRING)
8. 24 VOLT SIGNAL AND SENSOR CABLING, SEE SPECIFICATIONS AND INSTALLATION INSTRUCTIONS FOR ADDITIONAL REQUIREMENTS.
9. MOTOR DISCONNECT, SEE PLANS.

4 SIGNET FLOWMETER NO SCALE

5 PRESSURE/VACUUM GAUGE 6"=1'-0"

6 TYPICAL WIRING SCHEMATIC AT SPCS UNIT NO SCALE

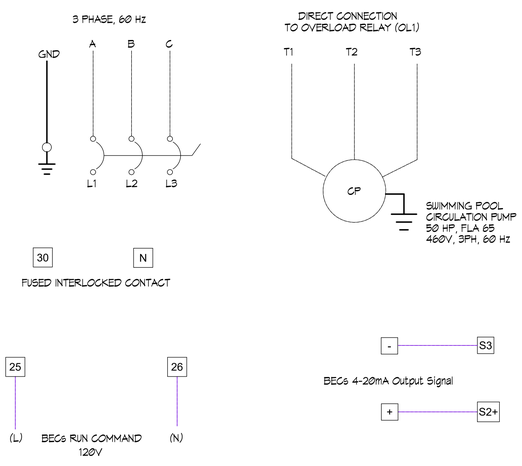

7 'SPCS' EKO-FLEX FIELD CONNECTION DIAGRAM NO SCALE

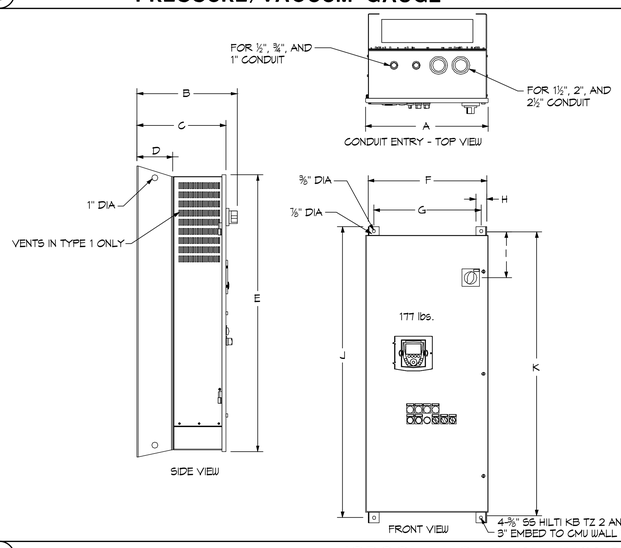

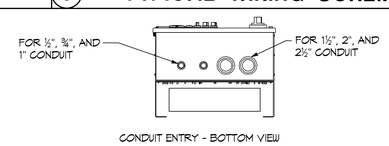

NOTE:
PROVIDE AT LEAST 3" OF MOUNTING CLEARANCE ON EACH SIDE OF THE DRIVE CONTROLLER.
PROVIDE AT LEAST 6" OF MOUNTING CLEARANCE ON EACH TOP AND BOTTOM OF THE DRIVE CONTROLLER

'SPCS' EKO-FLEX SIZING TABLE												
HP	HP	WEIGHT	DIMENSIONS									
460V	208/230V	LBS	A	B	C	D	E	F	G	H	I	J	K
30 TO 50	15 TO 25	177	20.65"	16.83"	14.83"	6.00"	46.64"	20.00"	18.04"	1.86"	7.75"	49.02"	47.83"

8 'SPCS' EKO-FLEX ENCLOSURE DIMENSIONS NO SCALE

IDENTIFICATION STAMP
DIV. OF THE STATE ARCHITECT
APP: 03-122664 INC:
REVIEWED FOR
SS ☑ FLS ☑ ACS ☑
DATE: 05/12/2023

pjhm architects
LICENSED ARCHITECT GEORG W. KRUG No. C15585 REN. 02/25 STATE OF CALIFORNIA
AQUATIC DESIGN GROUP
2226 Faraday Ave. Carlsbad, CA 92008
AquaticDesignGroup.com
760.438.8400
LICENSED ARCHITECT JEREMY S. ANDERSON C-35802 REN. 07/31/25 STATE OF CALIFORNIA
OC Office: 24461 Ridge Route Drive #100, Laguna Hills, CA 92653 • OC Phone: 949.496.6191 • SD Office: 804 Pier View Way #103, Oceanside, CA 92054 • SD Phone: 760.730.5527 • LA Office: 837 Traction Avenue, #410, Los Angeles, CA 90013 • LA Phone: 213.278.0172 • Web: pjhm.com

HIGHLAND HIGH SCHOOL
50M POOL & AQUATICS CENTER
KERN HIGH SCHOOL DISTRICT

DETAILS

MR.6

8/9/2023 7:17:17 AM

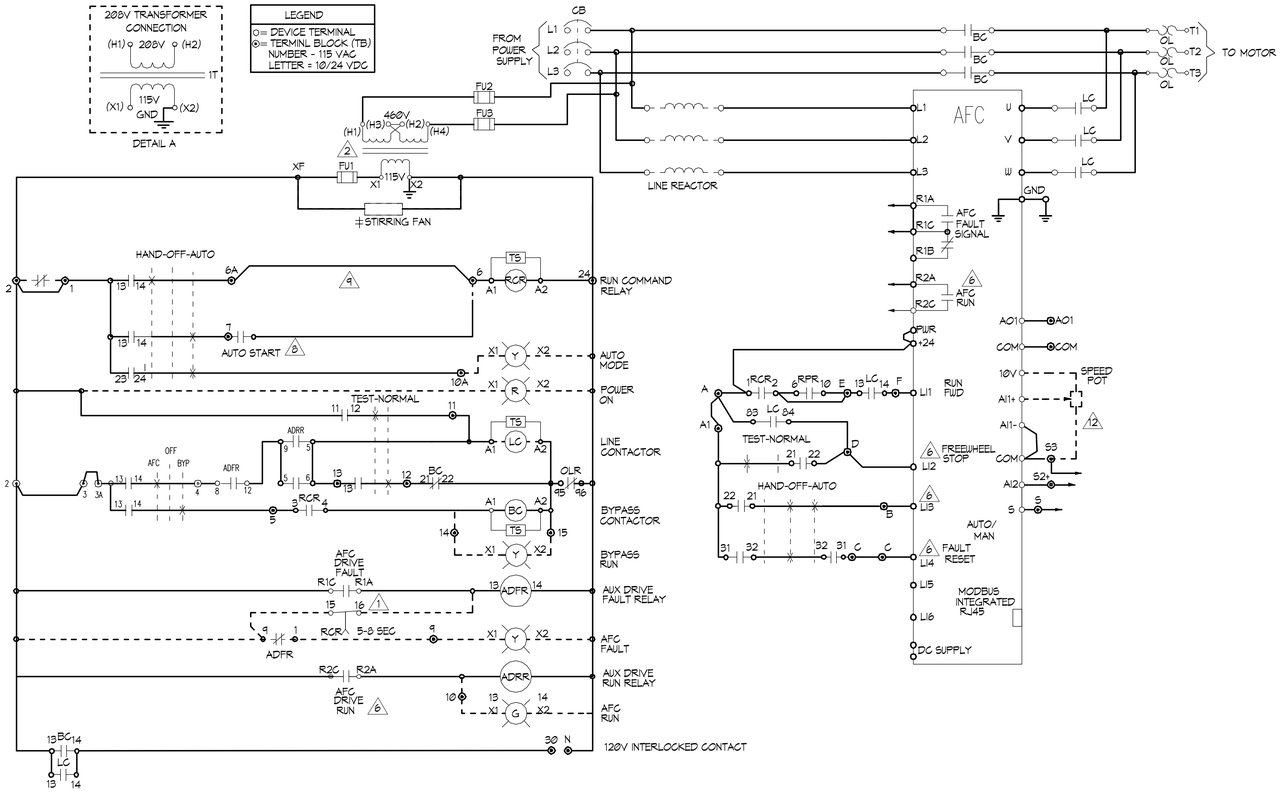

EKO-FLEX ATV61 FACTORY CONFIGURATION					
MENU	No	SUB-MENU	DESCRIPTION	CODE	ADJ.
SIM	1.1	----	2/3 WIRE CONTROL	tCC	2C
SIM	1.1	----	PUMPS FANS	CFG	PnF
SIM	1.1	----	STANDARD MOT. FREQ (HZ)	bFr	60
SIM	1.1	----	ACCELERATION (SEC)	ACC	10
SIM	1.1	----	DECELERATION (SEC)	dEC	10
SIM	1.1	----	LOW SPEED (HZ)	LSP	3
SIM	1.3	----	SWITCHING FREQ. (HZ)	SCr	8
I - O	1.5	----	2 WIRE TYPE	tCt	LEL
I - O	1.5	AI2 CONFIG.	AI2 MIN. VALUE (mA)	CrI2	4
I - O	1.5	R2 CONFIG.	R2 ASSIGN - DRIVE RUNNING	r2C	rUn
CtL	1.6	----	REF. 1 CHAN	FR1	HMI
CtL	1.6	----		FR1	AI1
CtL	1.6	----	PROFILE	CHCF	SEP
FUn	1.7	STOP CONFIG.	FREEWHEEL STOP ASSIGN	nST	LI2
FUn	1.7	REFERENCE SWITCH	REF. 1B SWITCHING	rCb	LI3
FUn	1.7	REFERENCE SWITCH	REF. 1B CHAN	Frlb	AI2
FLt	1.8	FAULT RESET	FAULT RESET	rSF	LI4
FLt	1.8	CATCH ON THE FLY	CATCH ON THE FLY	FLR	YES
FLt	1.8	OUTPUT PHASE LOSS	OUTPHASE LOSS	PDL	NO
COM	1.9	FORCED LOCAL	FORCED LOCAL ASSIGN.	FLt	LI4

DESCRIPTION	TYPE 1	TYPE 12K	TYPE 3R
⧺ STIRRING FANS	10-100 HP 460V, 7.5-50HP 208/230V	10-100 HP 460V, 7.5-50HP 208/230V	NA
⧺ VENTILIATION FAN	NA	NA	ALL HP
⧺ SPACE HEATER	NA	NA	ALL HP

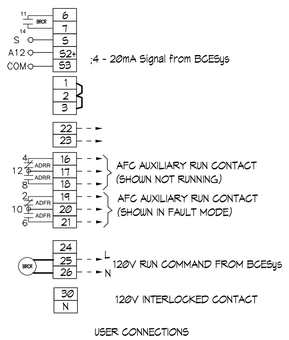

NOTES:

1. RCR TIMED CONTACT USED ONLY IF LINE CONTACTOR IS SUPPLIED
2. CONTROL TRANSFORMER SHOWN FOR 460V PRIMARY. FOR 230V PRIMARY, JUMPER H2-H3 IS
6. PROGRAMMED I/O SEE CONTROLLER FUNCTION CONFIGURATION TABLE.
8. BECs RUN COMMAND RELAY (BRCR)
9. JUMPER USED WHEN START-STOP PUSH BUTTONS NOT USED.

1 'SPCS' EKO-FLEX VARIABLE FREQUENCY DRIVE SYSTEM SCHEMATIC NO SCALE

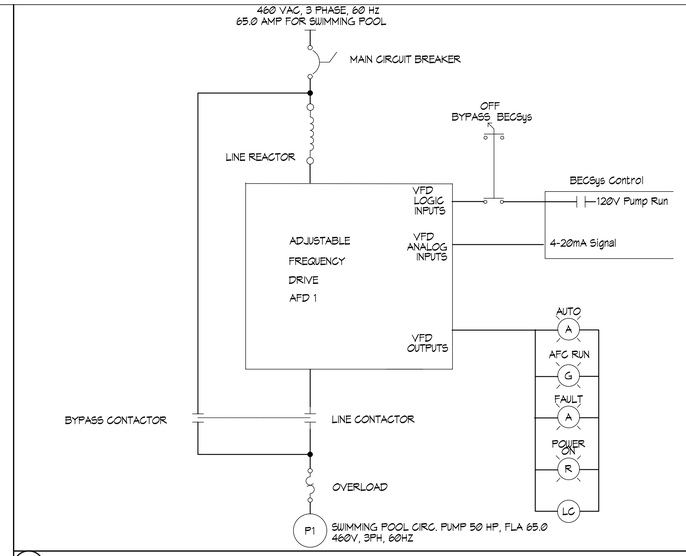

2 'SPCS' EKO-FLEX SINGLE LINE DIAGRAM NO SCALE

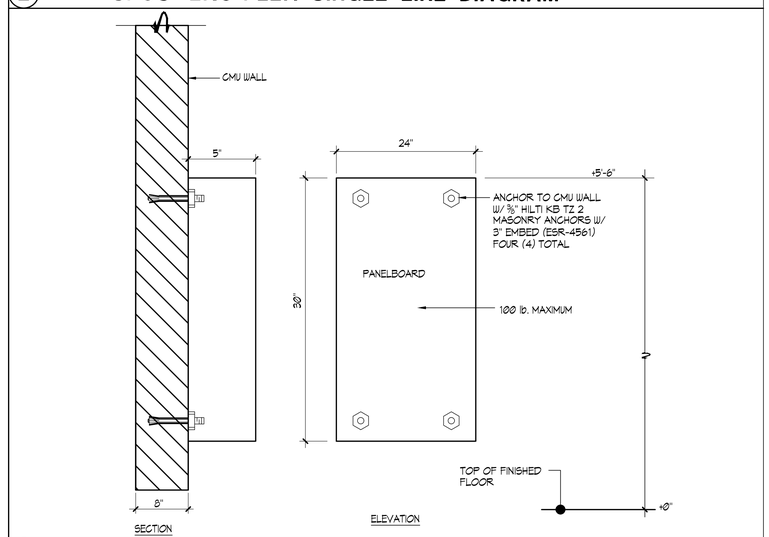

3 PANELBOARD MOUNTING DETAIL NO SCALE

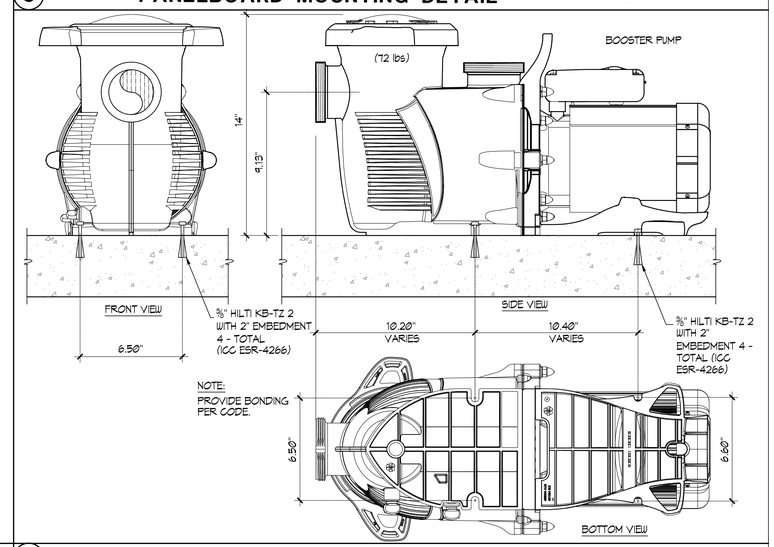

4 POOL COOLER BOOSTER PUMP ANCHORAGE 3" = 1'-0"

IDENTIFICATION STAMP
DIV. OF THE STATE ARCHITECT
APP: 03-122664 INC:
REVIEWED FOR
SS ☑ FLS ☑ ACS ☑
DATE: 05/12/2023

pjhm architects
LICENSED ARCHITECT GEORG W. KRUSE No. C15585 REN. 02/25 STATE OF CALIFORNIA
AQUATIC DESIGN GROUP
2226 Faraday Ave. Carlsbad, CA 92008
AquaticDesignGroup.com
760.438.8400
LICENSED ARCHITECT GREGORY S. ATKINS C-25802 REN. 07/31/25 STATE OF CALIFORNIA
OC Office: 24461 Ridge Route Drive #100, Laguna Hills, CA 92653 • OC Phone: 949.496.6191 • SD Office: 804 Pier View Way #103, Oceanside, CA 92054 • SD Phone: 760.730.5527 • LA Office: 837 Traction Avenue, #410, Los Angeles, CA 90013 • LA Phone: 213.278.0172 • Web: pjhm.com

HIGHLAND HIGH SCHOOL
50M POOL & AQUATICS CENTER

KERN HIGH SCHOOL DISTRICT

DETAILS

MR.7

MAY 02, 2023 7:17:07 PM

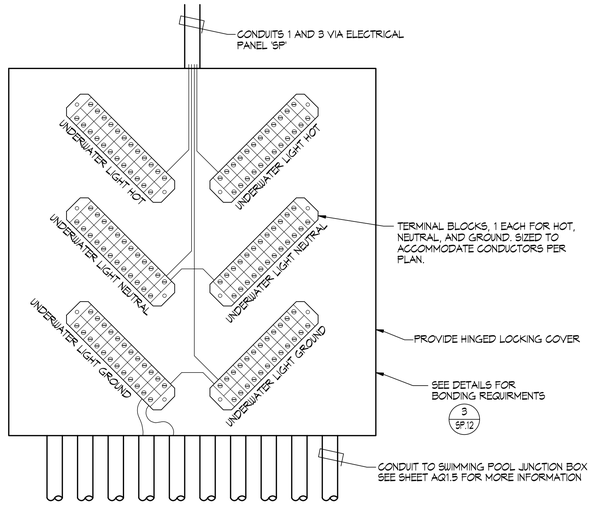

1 UNDERWATER LIGHT CONTACTOR PANEL

NO SCALE

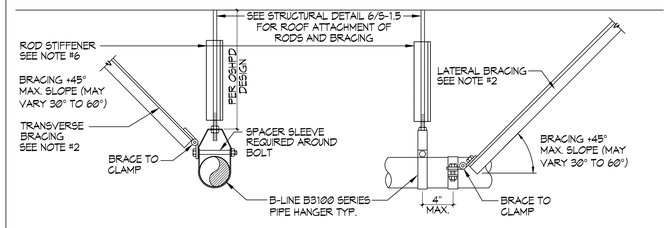

HANGER/BRACE PERPENDICULAR

HANGER/BRACE LONGITUDINAL

HANGER ROD SIZES/TABLE

⅜"ø AT 3" PIPING MAX. ROD LENGTH = 158" MAX PER OPM PG. C1.22
⅝"ø AT 4" PIPING MAX. ROD LENGTH = 158" MAX PER OPM PG. C1.34
¾"ø AT 6" PIPING MAX. ROD LENGTH = 158" MAX PER OPM PG. C1.44
¾"ø AT 8" PIPING MAX. ROD LENGTH = 158" MAX PER OPM PG. C1.44
¾"ø AT 12" PIPING MAX. ROD LENGTH = 158" MAX PER OPM PG. C1.44

MAX. PIPE HANGER SPACING

4" PIPING OR SMALLER = 6'-0" O.C.
6" PIPING = 6'-0" O.C.
8" PIPING = 6'-0" O.C.
10" PIPING = 6'-0" O.C.

NOTES:

1. REFER TO OSHPD (OPM #0043-13) FOR PIPE HANGER HARDWARE & INSTALLATION. INSTALLATION SHALL SATISFY ANCHORAGE REQUIREMENTS OF ACI 318 CHAPTER 17.
2. PROVIDE BRACING FOR EACH PIPE HANGER IN TWO DIRECTIONS AT THE FOLLOWING CONDITIONS.
   - AT EACH CHANGE IN PIPE RUN DIRECTION
   - MID LENGTH OF PIPE RUN
   - SPACING NOT TO EXCEED 12'-0" O.C.

   1⅝"x1⅝"x12GA SINGLE STRUT (5'-0" LENGTH MAX)
   1⅝"x1⅝"x12GA DOUBLE STRUT (14'-6" LENGTH MAX)
3. ALL HARDWARE SHALL BE STAINLESS STEEL OR GALVANIZED SEE SPECIFICATION FOR ADDITIONAL INFORMATION.
4. FOR COPPER TUBING USE COPPER PLATED OR PAINTED B3104GT, FELT LINED B3100F, OR PLASTIC COATED B3100C.
5. REFER TO MR.1 FOR PIPE HANGER LOCATIONS.
6. PROVIDE ROD STIFFENER WHEN TRANSVERSE OR LONGITUDINAL BRACING IS USED AND ROD LENGTHS EXCEEDS 3'T, SEE OPM DESIGN

3 'UNISTRUT' PIPING HANGER / SUPPORT DETAILS

NO SCALE

SYSTEM NO. C-AJ-2109

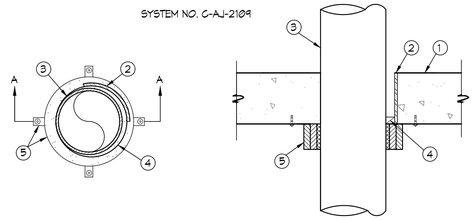

PVC PIPE	NOM. PIPE DIAM. IN	F RATING HR
PVC, CPVC	GREATER THAN 6	2
PVC, CPVC, ABS, FRPP	6 OR SMALLER	3
PVC PIPE	NOM. PIPE DIAM. IN	T RATING HR
PVC, CPVC, ABS, FRPP	1½, 2, 3,	2
PVC, CPVC, ABS, FRPP	4	3
PVC, CPVC, ABS+, FRPP	6	3
PVC, CPVC	GREATER THAN 6	0
ABS ++	6	0

+ INDICATES SOLID CORE ABS ONLY
++ INDICATES CELLULAR CORE ABS ONLY

1. FLOOR OR WALL ASSEMBLY - MIN. 4½" THICK REINFORCED LIGHTWEIGHT OR NORMAL WEIGHT (100-150 pcf) CONCRETE. WALL MAY ALSO BE CONSTRUCTED OF ANY UL CLASSIFIED CONCRETE BLOCKS. MAX. DIAM. OF OPENING IS 12" SEE CONCRETE BLOCKS (CAZT) CATEGORY IN THE FIRE RESISTANCE DIRECTORY FOR NAMES OF MANUFACTURES.
2. STEELE SLEEVE - (OPTIONAL) - NOM. 12" DIAM SCHEDULE 40 (OR HEAVIER) STEEL PIPE CAST OR GROUTED INTO FLOOR OR WALL ASSEMBLY, FLUSH WITH FLOOR OR WALL SURFACES A MAX. OF 3" ABOVE THE FLOOR. IF THE STEEL SLEEVE EXTENDS ABOVE THE FLOOR, THE T RATING OF THE FIRESTOP SYSTEM IS Ø HR AND A MIN ½" ANNULAR SPACE IS REQUIRED BETWEEN THE THROUGH PENETRANT (ITEM 3) AND THE PERIPHERY OF THE OPENING. THE W RATING DOES NOT APPLY WHEN THE STEEL SLEEVE IS USED.
3. THROUGH PENETRANTS - ONE NONMETALLIC PIPE TO BE INSTALLED EITHER CONCENTRICALLY OR ECCENTRICALLY WITHIN THE FIRESTOP SYSTEM. FOR MAX. 6" DIAM. PIPES, THE ANNULAR SPACE BETWEEN THE PIPE AND THE PERIPHERY OF OPENING SHALL BE MIN. 0" TO MAX. ½". FOR NOM. 8" AND 10" DIAM. PIPES THE ANNULAR SPACE BETWEEN THE PIPE AND THE PERIPHERY OF OPENING SHALL BE MIN. 0" TO MAX. 1⅛". IF THE STEEL SLEEVE EXTENDS ABOVE THE FLOOR (ITEM 2), A MIN. ½" ANNULAR SPACE IS REQUIRED BETWEEN THE THROUGH PENETRANT (ITEM 3) AND THE PERIPHERY OF THE OPENING. PIPE TO BE RIGIDLY SUPPORTED ON BOTH SIDES OF FLOOR OR WALL ASSEMBLY. FOR SYSTEMS WITH A W RATING, THE MAX. ANNULAR SPACE IS ½". THE T RATINGS ARE DEPENDENT ON THE SIZE AND/OR TYPE OF PIPE AS SHOWN IN THE TABLE BELOW. THE FOLLOWING TYPES AND SIZES OF NONMETALLIC PIPES MAY BE USED.
   A. POLYVINYL CHLORIDE PIPE (PVC) - NOM. 10" DIAM. (OR SMALLER) SCHEDULE 40 SOLID CORE OR CELLULAR CORE PVC PIPE FOR USE IN CLOSED (PROCESS OR SUPPLY) OR VENTED (DRAIN, WASTE OR VENT) PIPING SYSTEMS. FOR SYSTEMS WITH A W RATING, THE NOM. DIAM. OF PIPE SHALL NOT EXCEED 6".
   B. CHLORINATED POLYVINYL CHLORIDE (CPVC) PIPE - NOM. 10" DIAM. (OR SMALLER) SDR13.5 CPVC PIPE FOR USE IN CLOSED (PROCESS OR SUPPLY) PIPING SYSTEMS. FOR SYSTEMS WITH A W RATING, THE NOM. DIAM. OF PIPE SHALL NOT EXCEED 6".
   C. ACRYLONITRATE BUTADIENE STYRENE (ABS) PIPE - NOM. 6" DIAM. (OR SMALLER) SCHEDULE 40 SOLID-CORE OR CELLULAR CORE ABS PIPE FOR USE IN CLOSED (PROCESS OR SUPPLY) OR VENTED (DRAIN, WASTE OR VENT) PIPING SYSTEM.
   D. FLAME RESISTANT POLYPROPYLENE (FRPP) PIPE - NOM. 6" DIAM. (OR SMALLER) SCHEDULE 40 FRPP PIPE FOR USE IN CLOSED (PROCESS OR SUPPLY) OR VENTED (DRAIN, WASTE OR VENT) PIPING SYSTEMS.
4. FILL, VOID OR CAVITY MATERIAL* - SEALANT - MIN. ¼" THICKNESS OF FILL MATERIAL APPLIED WITHIN THE ANNULUS, FLUSH WITH TOP OR BOTTOM SURFACE OF FLOOR OR BOTH SURFACES OF WALL. SEALANT IS OPTIONAL FOR PIPES HAVING A MAX. DIAM. OF 6" IN UNSLEEVED OPENINGS. FOR SYSTEMS WITH W RATING AND/OR L RATING MIN. ½" THICKNESS OF CP 601S, CFS-S SIL SL (FLOORS ONLY) SEALANT SHALL BE APPLIED WITHIN THE ANNULUS, FLUSH WITH TOP OR BOTTOM SURFACE OF FLOOR. HILTI CONSTRUCTION CHEMICALS, DIV. OF HILTI INC. - FS-ONE MAX INTUMESCENT SEALANT, CP 601S SEALANT, CFS-S SIL GG, CFS-S SIL SL (FLOORS ONLY) SEALANT.

4A. PACKING MATERIAL - (NOT SHOWN) - MIN. ¼" THICKNESS OF 4 pcf MINERAL WOOL BATT INSULATION FIRMLY PACKED INTO ANNULAR SPACE AND RECESSED FROM THE TOP SURFACE OF FLOOR TO ACCOMODATE THE REQUIRED THICKNESS OF FILL MATERIAL. REQUIRED ONLY WHEN CP 604 SEALANT IS USED.

5. FIRESTOP DEVICE - FIRESTOP COLLAR - FIRESTOP COLLAR SHALL BE INSTALLED IN ACCORDANCE WITH THE ACCOMPANYING INSTRUCTIONS. COLLAR TO BE INSTALLED AND LATCHED AROUND THE PIPE AND SECURED TO UNDERSIDE OF FLOOR OR BOTH SIDES OF WALL USING THE ANCHOR HOOKS PROVIDED WITH THE COLLAR. MINIMUM TWO ANCHOR HOOKS FOR NOM. 1½" AND 2" DIAM. PIPES. MINIMUM THREE ANCHOR HOOKS REQUIRED FOR NOM. 3" AND 4" DIAM. PIPES. MINIMUM FOUR ANCHOR HOOKS REQUIRED FOR NOM. 6" DIAM. PIPES. MINIMUM 10 ANCHOR HOOKS REQUIRED FOR NOM. 8" DIAM. PIPES. MINIMUM TWELVE ANCHOR HOOKS REQUIRED FOR NOM. 10" DIAM. PIPES. THE ANCHOR HOOKS ARE TO BE SECURED WITH MIN. ¼" DIAM. BY MIN. 1⅛" LONG STEEL EXPANSION BOLTS OR MIN. Ø.145" DIAM. BY 1¼" LONG POWDER ACTUATED FASTENERS UTILIZING A 1 7/16" DIAM. BY 1/16" THICK STEEL WASHER. AS ALTERNATES TO THE ANCHORS SPECIFIED ABOVE, HILTI ¼" DIAM. BY 1¼" LONG KWIK-CON II + CONCRETE SCREW ANCHOR, HILTI ¼" DIAM. BY 1⅜" LONG KWIK-BOLT 3 STEEL EXPANSION ANCHOR OR HILTI X-DNI 21 P8 S15 POWDER ACTUATED FLOOR PIN WITH INTEGRAL NOM. 9/16" DIAM. WASHER MAY BE USED.
HILTI CONSTRUCTION CHEMICALS, DIV. OF HILTI INC. - CP 643N 50/1.5", CP 643N 63/2", CP 643N 90/3", CP 643N 110/4", CP 643 160/6", CP 644-200/8" OR US OR CP 644-250/10" US FIRESTOP COLLAR.

* INDICATES SUCH PRODUCTS SHALL BEAR THE UL CERTIFICATION MARK FOR JURISDICTIONS EMPLOYING THE UL.

2 PIPE PENETRATION THRU 1-HR OR 2-HR WALL DETAIL

NO SCALE

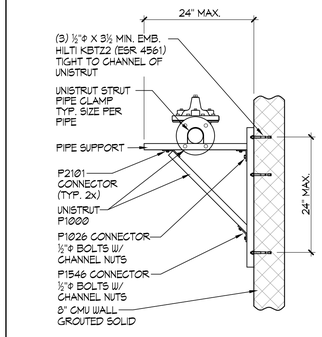

EXTENDED WALL MOUNTED PIPE SUPPORT

MAX. PIPE HANGER SPACING

4" PIPING OR SMALLER = 6'-0" O.C.
6" PIPING = 6'-0" O.C.
8" PIPING = 6'-0" O.C.
12" PIPING = 4'-0" O.C.
14" PIPING = 4'-0" O.C.

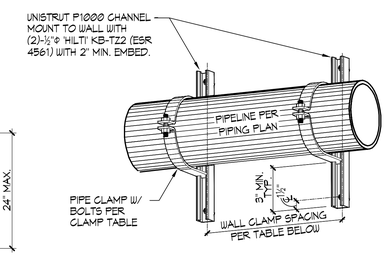

WALL MOUNTED PIPE SUPPORT

CLAMP SIZES		
PIPE SIZE	MAX. SPACG	CLAMP MODEL
1½"	4'-0"	P1115
2"	4'-0"	P1117
2½"	4'-0"	P1118
3"	4'-0"	P1119
4"	6'-0"	P1121
6"	8'-0"	P1124
8"	8'-0"	P1126

4 WALL MOUNTED PIPE SUPPORT

NO SCALE

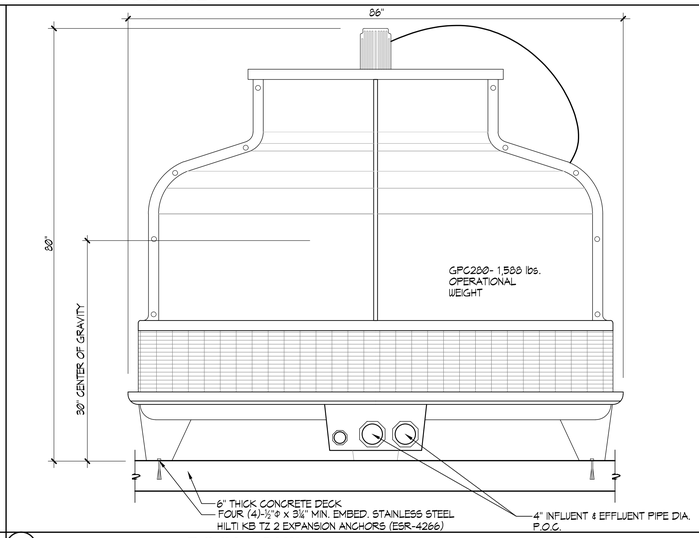

5 POOL CHILLER DETAIL

NO SCALE

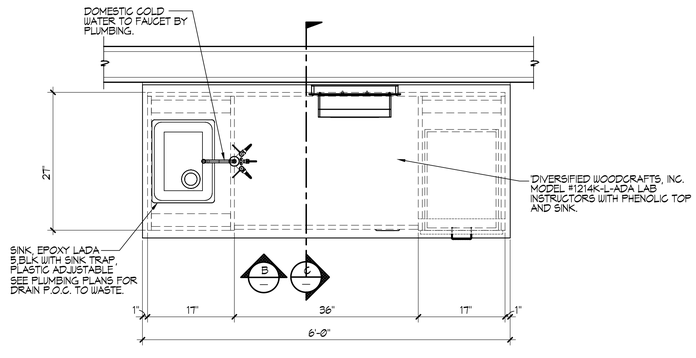

A PLAN VIEW

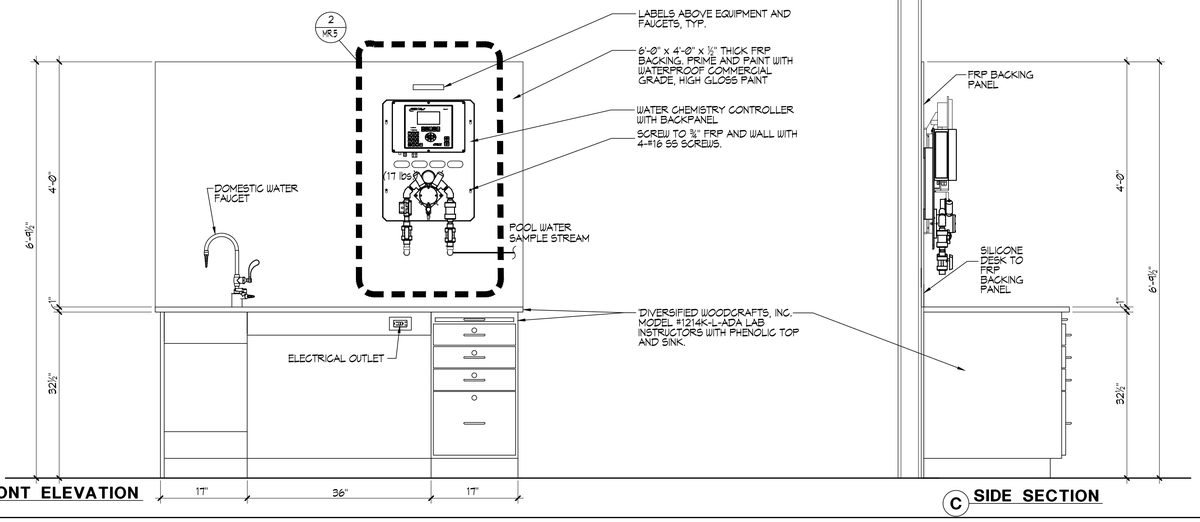

B FRONT ELEVATION

C SIDE SECTION

6 POOL OPERATOR WORKSTATION DESK DETAIL

1"=1'-0"

IDENTIFICATION STAMP
DIV. OF THE STATE ARCHITECT
APP: 03-122664 INC:
REVIEWED FOR
SS ☑ FLS ☑ ACS ☑
DATE: 05/12/2023

pjhm architects
LICENSED ARCHITECT GREGORY W. KRAUS No. C15585 REN. 02/25 STATE OF CALIFORNIA
AQUATIC DESIGN GROUP
2226 Faraday Ave, Carlsbad, CA 92008
AquaticDesignGroup.com
760.438.8400
LICENSED ARCHITECT GREGORY S. ATTEE C-25802 REN. 07/31/25 STATE OF CALIFORNIA
LA Office: 837 Traction Avenue, #410, Los Angeles, CA 90013 • LA Phone: 213.278.0172 • Web: pjhm.com
SD Office: 804 Pier View Way #103, Oceanside, CA 92054 • SD Phone: 760.730.5527
OC Office: 24461 Ridge Route Drive #100, Laguna Hills, CA 92653 • OC Phone: 949.496.6191

HIGHLAND HIGH SCHOOL
50M POOL & AQUATICS CENTER

KERN HIGH SCHOOL DISTRICT

DETAILS

MR.8

10/30/2023 11:11:20 AM

NOTE:

THERMOSTAT PROBE GOES INTO A DRYWELL, THEN IS PLACED DIRECTLY INTO INLINE PIPING OR PVC FITTING BEFORE CHILLER INLET. T-STAT ELEC. WIRING GOES TO CONTACTOR TO THE SINGLE POLE PORT. FAN WIRING IS CONNECTED TO THE 3-POLE PORT. THE T-STAT CONTROLS THE POWER TO THE FAN (ONLY) FOR COOLING. THE T-STAT REQUIRES 115 LEG FROM 1 PH BREAKER. REFER TO CHILLER TECHNICAL SPECIFICATION FOR ADDITIONAL INFORMATION.

ELECTRICAL WITHOUT SUMP PUMP SYSTEM

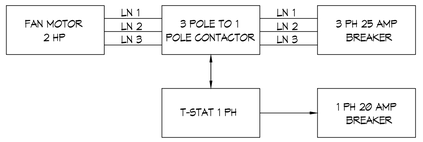

1 POOL COOLER ELECTRICAL DIAGRAM

NO SCALE

IDENTIFICATION STAMP
DIV. OF THE STATE ARCHITECT
APP: 03-122664 INC:
REVIEWED FOR
SS ☑ FLS ☑ ACS ☑
DATE: 05/12/2023

pjhm architects

LICENSED ARCHITECT
THOMAS W. KRUSE
No. C35585
REN. 02/25
STATE OF CALIFORNIA

AQUATIC DESIGN GROUP
2226 Faraday Ave. Carlsbad, CA 92008
AquaticDesignGroup.com
760.438.8400

LICENSED ARCHITECT
GREGORY S. ROSE
C-35802
REN. 07/31/25
STATE OF CALIFORNIA

HIGHLAND HIGH SCHOOL
50M POOL & AQUATICS CENTER

KERN HIGH SCHOOL DISTRICT

DETAILS

MR.9

OC Office: 24461 Ridge Route Drive #100, Laguna Hills, CA 92653 • OC Phone: 949.496.6191 • SD Office: 804 Pier View Way #103, Oceanside, CA 92054 • SD Phone: 760.730.5527 • LA Office: 837 Traction Avenue, #410, Los Angeles, CA 90013 • LA Phone: 213.278.0172 • Web: pjhm.com

8/29/2023 11:11:55 AM

GENERAL NOTES:

APPLICABLE BUILDING CODE

All construction and workmanship shall conform to the 2019 California Building Code, California Code of Regulations – Title 24, Parts 1 & 2.

This pole and foundation standard has been designed for lateral loads on the completed structure as follows:

Wind Design Data:
- Vult = 94 MPH (Exposure C); Vasd = 73 MPH (Exposure C)
- Risk Category = II
- See Pole Foundation Schedule for maximum pole wind forces.

Seismic Design Data:
- Ie = 1.0
- Risk Category = II (Self Supporting Poles)
- Ss = 0.916
- S1 = 0.329
- Site Class = D
- Sms = 0.693
- Sm1 = 0.432
- Seismic Design Category = D
- Basic Seismic-Force-Resisting System = Non-Building Structure, not similar to buildings
- Cs = 0.330 (STRENGTH LEVEL)
- R = 1.5
- Ω = 1.5
- Analysis Procedure = Equivalent Lateral Force Procedure
- See Pole Foundation Schedule for maximum pole seismic forces.

GENERAL CONSTRUCTION

These notes shall be used in conjunction with the plans and any discrepancies shall be brought to the attention of the Registered Design Professional (RDP) in Responsible Charge.

Contractor must check all dimensions, clearances and job conditions before starting work. The RDP in Responsible Charge shall be notified immediately of any discrepancies or possible deficiencies.

The drawings and specifications represent the finished structure. All bracing, temporary supports, shoring, etc., is the sole responsibility of the Contractor. Observation visits to the job site by the RDP in Responsible Charge do not include inspection of construction procedures. The Contractor is solely responsible for all construction methods and for safety conditions at the worksite. These visits by RDP in Responsible Charge shall not be construed as continuous and detailed inspections.

Design, material, equipment, and products other than those described below or indicated on the drawings may be considered for use, provided prior approval is obtained from the School District, the RDP in Responsible Charge, and DSA.

All changes to the approved plans after a contract for construction has been awarded, affecting structural, access or life-safety portions of the project, shall be made by means of construction change documents (CCD) approved by DSA, as required by Section 4-338, Part 1, Title 24, CCR. All CCD shall be prepared and signed by the RDP in general Responsible Charge.

Substitutions shall be considered as a CCD and shall be approved by DSA prior to fabrication or use.

A Class 1 or Class 2 Project Inspector employed by the School District (Owner) and approved by DSA shall provide continuous inspection of the work, the duties of the Inspector are defined in Section 4-342, Part 1, Title 24, CCR.

All Tests And Inspections shall be performed by an Independent lab employed by the School District and approved by DSA.

Reference pole location on the Architectural, Structural, and/or Electrical drawings for actual pole placement and site location. Pole shall be located 5'-0" min. from adjacent structures below 50'-0" A.G.L., unless noted otherwise.

LIGHT POLE FOUNDATIONS

Reference geotechnical report prepared by Soils Engineering, Inc., Dated August 5, 2022; Project no. 22-18353.

Allowable Vertical soil Capacity – 3,000 PSF (End Bearing), 300 PSF (Skin Friction), neglect top 1 FT of soil.

Allowable Lateral Bearing capacity: 150 PSF/FT to maximum 2,250 PSF. Values may be doubled for piers not affected by half-inch motions at the ground.

A representative of Soils Engineering, Inc. should be available at the time of the foundation installation to verify the soil design parameters and to provide assistance if any problems arise in foundation installation.

The Contractor must familiarize himself with the complete geotechnical report, and borings and contact the above firm to understand the soil conditions and the possibility of ground water pumping and excavation stabilization or bracing during the foundation installation and placement of concrete.

Soil formations that will require special design considerations or excavation procedures may exist. Pole foundations may need to be reanalyzed according to the soil conditions that exist.

If any discrepancies or inconsistencies arise, notify the RDP in Responsible Charge of such discrepancies.

All piers and concrete must bear on and against firm undisturbed soil as determined by the Geotechnical Engineer.

Place plywood collar around perimeter at the top of foundation excavation to prevent soil from entering pier.

All excavations must be free of loose soil, and debris prior to foundation installation and placement of concrete. Casing or drilling slurry may be required if caving occurs. Review and approval of the Geotechnical Engineer and DSA is required.

All excavations must be free of water or concrete shall be placed by the Tremie Method in accordance with ACI standard 336. Concrete placed by the Tremie Method shall have a minimum ultimate strength of 1,000 PSI greater than required under "Concrete Cast-in-Place' and a maximum slump of 8".

CONCRETE (CAST-IN-PLACE)

Concrete pier foundations with steel reinforcement shall attain a minimum ultimate compressive strength at 28 day test of 3,000 psi. Batch plant inspection not required.

All concrete shall attain a minimum strength of 2,500 psi prior to steel pole erection.

Use Type II/V Portland cement or as directed by the Geotechnical Engineer.

Portland Cement ASTM C-150.

Aggregate ASTM C-33. 1" maximum aggregate size. ⅜" max agg. size not permitted.

Mix in conformance with ASTM C-94, ACI 318 SECTIONS 19.2 and 26.4.

Place concrete immediately after completion of excavation and inspection by the Geotechnical Engineer and the DSA Inspector. Under no circumstances shall piers be allowed to remain open for more than 12 hours without the approval of the Geotechnical Engineer. Excavations shall be covered and protected until filled with concrete.

Concrete shall be placed in one continuous operation (no construction joint) with special equipment to assure a maximum freefall of 5 ft and to prevent concrete from striking the sides of the excavation. Freefall of concrete is unacceptable through water or drilling slurry.

Vibrate concrete full depth, except for concrete with slump greater than 6", then vibrate only upper 10'-0". Concrete placed under water shall have a slump of 6"-8".

STEEL POLE

Steel pole sections conform to the California Code of Regulations T.24, Part 2, Chapter 22A.

All steel conforms to referenced ASTM specifications. (See Pole Data Table for each pole type).

All weldment conforms with AWS D1.1-15 specification for GMAW fillet utilizing E70S-X filler metal or SAW fillet utilizing F7XX-EXXX or F8XX-EXXX filler metal.
GMAW procedure conforms to AWS A5.18.
SAW procedure conforms to AWS A5.23.

Longitudinal seam welds for pole sections shall have 60% minimum penetration; Except longitudinal seam welds on the female section of telescopic field splices shall be full penetration groove welds for a length equal to the minimum splice length plus 6 inches. See drawing number MD1 for seam weld details.

Pole sections hot dipped galvanized to ASTM A123 latest standards.

All miscellaneous structural steel items conform to AISC 360-16.

Steel pole sections shall be assembled in the field by attaching two 1.5 ton "come alongs" to jacking ears, using full effort on each simultaneously, to ensure minimum overlaps as indicated on the "MS" sheet(s) and detail G/MD1.

PRECAST BASE

The precast concrete base conforms to California Code of Regulations, T.24, part 2, Chapter 19A and to Building Code Requirements for Reinforced Concrete, ACI 318-14.

See detail "A" on "MS" sheet(s) for material strengths and specifications.

TESTING AND INSPECTION

Testing and inspection in accordance with Title 24, Part 1 & Part 2 & project DSA 103 form.

EXCAVATIONS & FOUNDATIONS:
Inspection of cast-in-place deep foundations – 1705A.8 & Table 1705A.8

CONCRETE MATERIALS: 1903A.1
Portland cement – 1910A.1
Concrete aggregates – 1903A.5
Reinforcing bars – 1910A.2 & DSA IR 17-10
Prestressing steel and anchorages – 1910A.3

CONCRETE QUALITY:
Proportions of concrete – Reference ACI 318 Section 26.4.3.1 Through 26.4.4.1.
Strength tests of concrete – 1905A.1.15 and ACI 318 Section 26.12 & 26.5.3.2.

CONCRETE INSPECTION: 1705A.3 & Table 1705A.3
Job site – Reference ACI 318 Section 26.5.1,26.5.2.1(a) & (b),26.6.1.2(d), 26.11.1.1(a).
Batch Plant Inspection Not Required – 1705A.3.3.2
Prestressed concrete – 1704A.2.5, 1705A.3.4

STEEL MATERIALS:
Structural steel – 2202A.1 & 2205A.1
Cold formed steel – 2210A.1
Identification – 2202A.1

STEEL QUALITY:
Tests of structural steel & cold formed steel – 2202A.1

STRUCTURAL STEEL INSPECTIONS: Table 1705A.2.1
Shop fabrication inspection – 1704A2.5
Welding – 1705A.2.5, DSA IR 17-3 and AWS D1.1.
(NOTE: ALL WELDING SHALL BE CONTINUOUSLY INSPECTED BY AN AWS CWI CERTIFIED INSPECTOR APPROVED BY DSA)

These plans are for construction approval. An application number and approval of these drawings by the Division of The State Architect of California must be secured to build from these plans.

INDEX OF SHEETS

MT1	NOTES, FOUNDATION DETAIL
MS1	50B POLE DETAILS
MD1	ATTACHMENT DETAILS
MD2	ATTACHMENT DETAILS
MD3	ATTACHMENT DETAILS

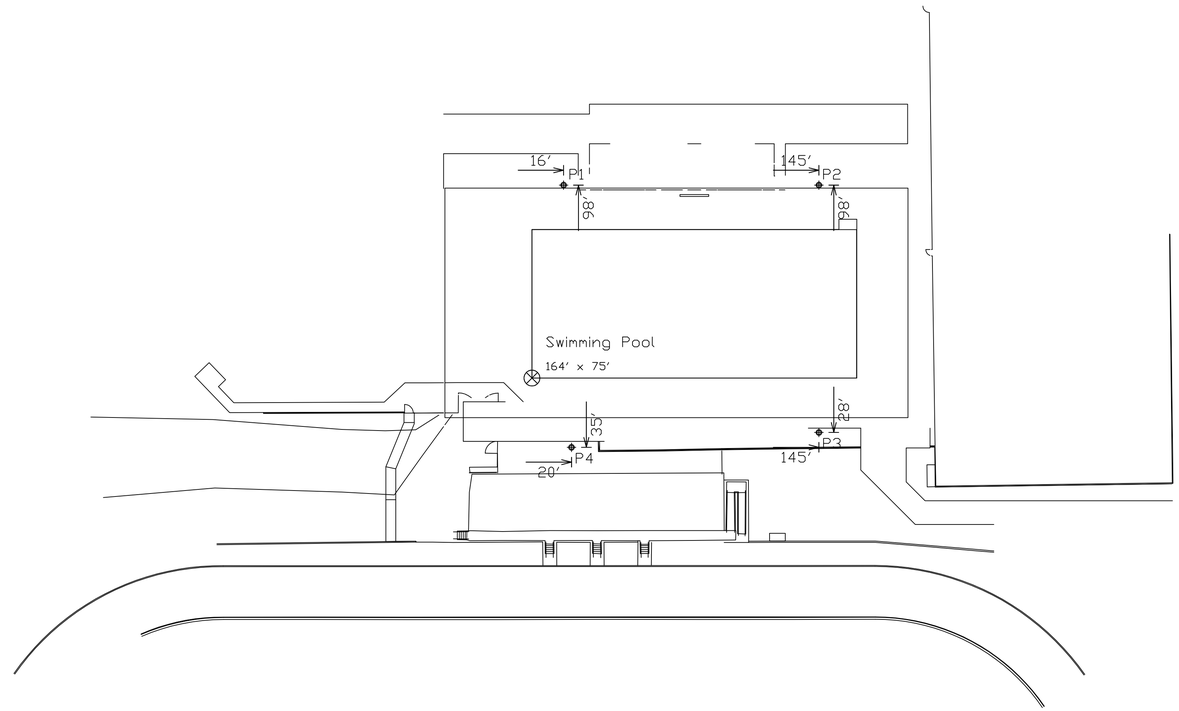

POLE ORIENTATION PLAN
N.T.S.

NOTE: THIS PLAN IS A PICTORAL REPRESENTATION OF THE SITE LAYOUT. REFERENCE APPROPRIATE ARCHITECTURAL SITE PLAN FOR ALL NECESSARY INFORMATION.

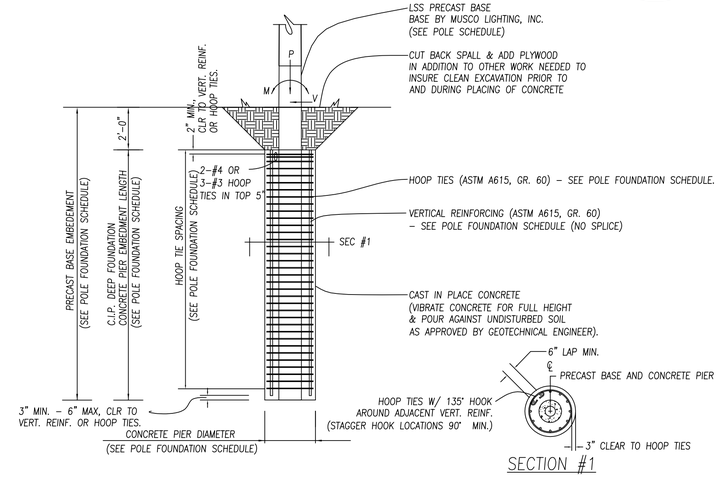

A REINFORCED FOUNDATION DETAIL
N.T.S. DSA-A2-CASFND_A

POLE FOUNDATION SCHEDULE

POLE TYPE-# OF FIXTURES (MAX) (LSS=LIGHT STRUCTURE)	MARK (SEE POLE ORIENTATION PLAN)	WIND OR SEISMIC (SEISMIC FORCE INCLUDES OVERSTRENGTH FACTOR=1.5)	ASD LEVEL FORCES (MAX)			C.I.P. DEEP FOUNDATION				PRECAST BASE
			MOMENT (M) FT-LBS*	SHEAR (V) LBS	VERTICAL (P) LBS**	DIAMETER INCHES	EMBEDMENT FEET (SEE NOTE BELOW)	VERTICAL REINFORCING (ASTM A615, GR 60)	HOOP TIE SIZE & SPACING (ASTM A615, GR 60)	EMBEDMENT FEET
LSS50B-4	P1-P4	SEISMIC	21,600	669	1,930	36"	8'-0"	8-#8	#4 @ 6" O.C.	10'-0"
		WIND	27,300	822	1,153					

*Moment (M) computed below grade at Shear (V) = 0.
**Vertical (P) load includes steel pole, light fixtures, and attachments. Vertical (P) load for wind is the dressed pole weight for erection purposes. Vertical (P) load for seismic also includes weight of precast base above groundline. Reference Detail "A" on MS Sheet(s) for precast base weight.
Note:
Final Embedment to be determined in the field by the Geotechnical Engineer of Record

Information contained herein is the confidential property of Musco Sports Lighting, LLC and/or its parent companies, affiliates, successors and assigns. Reproduction, distribution, or use of the information other than its limited, intended purpose without express written permission is prohibited.
Musco products referenced or shown are protected by one or more of the following patents. U.S. Patents: 4947303; 4994718; 5075828; 5134557; 5161883; 5211473; 5229681; 5377611; 5398478; 5423281; 5426577; 5600537; 5794387; 5856721; 6036338; 6203176; 6250596; 6340790; 6398392; 6681110; 6833675; 6929385; 6969034; 6988697; 7059572; D337168; D353797; D353911; D411096. Other patents pending.

DSA-TITLE1_E

IDENTIFICATION STAMP
DIV. OF THE STATE ARCHITECT
APP: 03-122664 INC:
REVIEWED FOR
SS ☑ FLS ☑ ACS ☑
DATE: 05/12/2023

Highland HS Pool
FIELD LIGHTING
Bakersfield, CA

LICENSED ARCHITECT
THOMAS W. KRAUS
No. C15585
REN. 02/25
STATE OF CALIFORNIA

REGISTERED PROFESSIONAL ENGINEER
No. 4506
Exp. 6-30-23
STRUCTURAL
STATE OF CALIFORNIA

CONSULTANT
KNA STRUCTURAL ENGINEERS
9931 Irvine Center Drive, Irvine, CA 92618
TEL (949) 460-0200 FAX (949) 460-0201
www.KNAstructural.com
KNA JOB NO.: 463.116

MUSCO Lighting
CORPORATE OFFICE:
P.O. Box 808
100 1st Avenue West
Oskaloosa, Iowa 52577
800/825-6020

DRAWING TITLE: NOTES, FOUNDATION DETAIL
SCALE: SEE PLAN
REVISIONS:
REFERENCE:

PROJECT NO. 221419

DATE: 10/18/2022

DRAWN BY: C.Hensley

DRAWING NO. MT1
1 OF 5

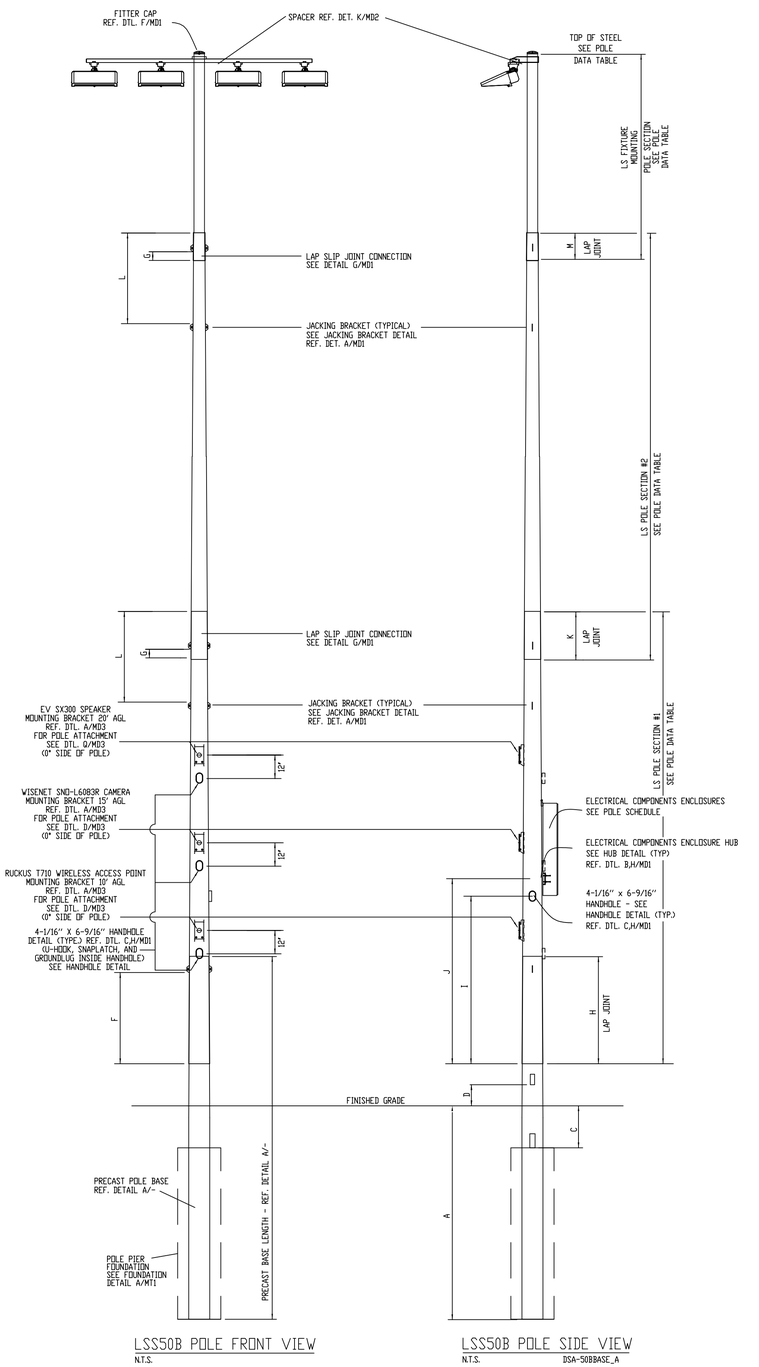

LSS50B POLE FRONT VIEW
N.T.S.

LSS50B POLE SIDE VIEW
N.T.S. DSA-50BBASE_A

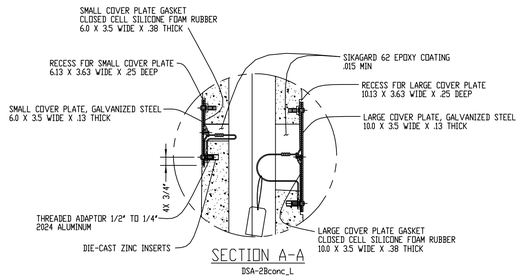

SECTION A-A
DSA-2Bconc_L

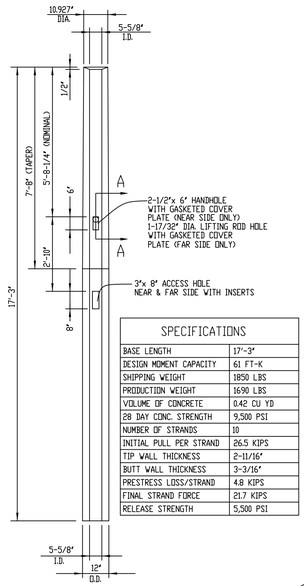

SPECIFICATIONS	
BASE LENGTH	17'-3"
DESIGN MOMENT CAPACITY	61 FT-K
SHIPPING WEIGHT	1850 LBS
PRODUCTION WEIGHT	1690 LBS
VOLUME OF CONCRETE	0.42 CU YD
28 DAY CONC. STRENGTH	9,500 PSI
NUMBER OF STRANDS	10
INITIAL PULL PER STRAND	26.5 KIPS
TIP WALL THICKNESS	2-11/16"
BUTT WALL THICKNESS	3-3/16"
PRESTRESS LOSS/STRAND	4.8 KIPS
FINAL STRAND FORCE	21.7 KIPS
RELEASE STRENGTH	5,500 PSI

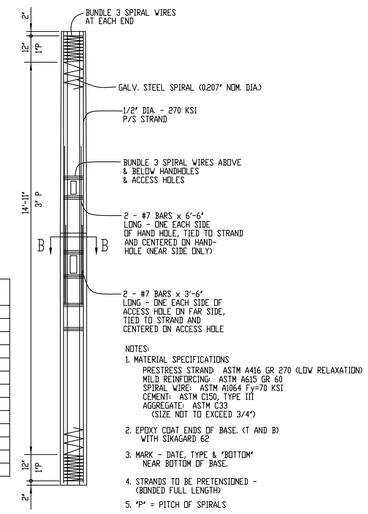

NOTES:
1. MATERIAL SPECIFICATIONS
   PRESTRESS STRAND: ASTM A416 GR 270 (LOW RELAXATION)
   MILD REINFORCING: ASTM A615 GR 60
   SPIRAL WIRE: ASTM A1064 Fy=70 KSI
   CEMENT: ASTM C150, TYPE III
   AGGREGATE: ASTM C33
   (SIZE NOT TO EXCEED 3/4")
2. EPOXY COAT ENDS OF BASE. (T AND B)
   WITH SIKAGARD 62
3. MARK - DATE, TYPE & "BOTTOM"
   NEAR BOTTOM OF BASE.
4. STRANDS TO BE PRETENSIONED -
   (BONDED FULL LENGTH)
5. "P" = PITCH OF SPIRALS
6. EPOXY COAT INSIDE SURFACES AT EACH HOLE
   WITH SIKAGARD 62 .015 MIN.

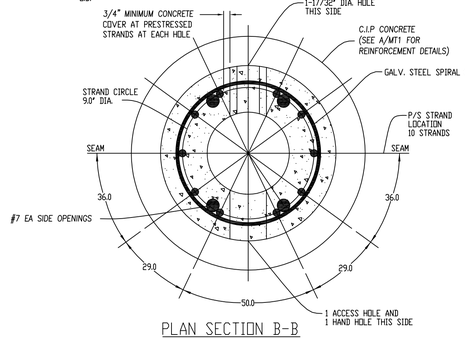

PLAN SECTION B-B

A TYPE 2B PRECAST BASE DETAIL
N.T.S. DSA-2Bconc_L

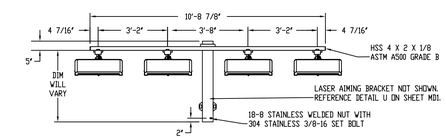

B 4 FIXTURE CONFIGURATION
N.T.S. DSA-4C-WEDGE4_A

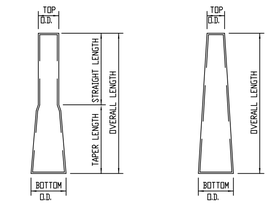

FIXTURE MOUNTING POLE SECTION

TOP/MIDDLE/BOTTOM POLE SECTION

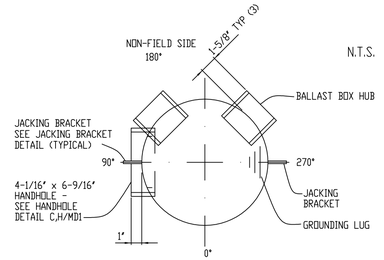

POLE ORIENTATION
N.T.S.

NOTATION	DIMENSION LSS50B
A	10'-0"
C	2'-0" NOM.
D	1'-0" NOM.
F	4'-4" NOM.
G	1'-6"
H	5'-1 1/4" NOM. 4'-7 3/8" MIN.
I	7'-7 1/2" NOM.
J	8'-9 1/2" NOM.
K	3'-7 1/4" NOM. 1'-10 1/4" MIN.
L	4'-7" NOM.
M	1'-10" NOM. 1'-3" MIN.

1. CONTAINS COMBINED EPA OF LIGHT FIXTURES, CROSS ARM AND MISCELLANEOUS FIXTURE MOUNTING APPARATUS.

FIXTURE WEIGHT 528 LBS. THIS INCLUDES THE WEIGHT OF FIXTURE, CROSS ARM & MISC. MOUNTING APPARATUS. ELECTRICAL BALLAST BOX WEIGHT 20 LBS PER FIXTURE SERVICED

POLE SCHEDULE

SITE LOCATION	POLE MARK	REFERENCE LOCATION	POLE TYPE	FIXTURE CONFIGURATION	TOTAL EPA[1]	BALLAST BOX REQUIREMENTS
SEE SITE PLAN (BY OTHERS)	P1-P4	SEE POLE ORIENTATION PLAN	LSS50B	4 - SEE DETAIL B/MS1	10.74	SEE DETAIL D,D,/MD1

DSA-POLESCHE_C

POLE DATA TABLE

POLE TYPE	PIECE MARK	MAX NUMBER of X-Arms	POLE SECTION	TOP O.D. (INCHES)	BTM. O.D. (INCHES)	OVERALL LENGTH	STRAIGHT LENGTH	TAPER LENGTH	THICKNESS (INCHES)	TOP OF STEEL NOMINAL	ASTM REFERENCE
LSS50B	LS-2009	1	FIXTURE MOUNTING	6.000"	6.505"	5'-3"	3'-5"	1'-10"	.120	50'-0 7/8"	A513 (Fy=38ksi)
	MP-1TTDSA-2		#2	5.980"	9.630"	26'-0 7/8"	-----	26'-0 7/8"	.120	-----	A595A (Fy=55 ksi) or A572, Gr 55 or 65
	MP-1BT-D		#1	8.886"	12.000"	22'-2 7/8"	-----	22'-2 7/8"	.179	-----	A595A (Fy=55 ksi) or A572, Gr 55 or 65
	MP-2BDSA		PRECAST BASE				FOR PRECAST MEMBER PROPERTIES SEE PRECAST BASE DETAIL A/-				

DSA-50BDT_H

DSA-50_A

IDENTIFICATION STAMP
DIV. OF THE STATE ARCHITECT
APP: 03-122664 INC:
REVIEWED FOR
SS ☑ FLS ☑ ACS ☑
DATE: 05/12/2023

Highland HS Pool
FIELD LIGHTING
Bakersfield,CA

REGISTERED PROFESSIONAL ENGINEER
No. 4506
Exp. 6-30-23
STRUCTURAL
STATE OF CALIFORNIA

CONSULTANT
KNA STRUCTURAL ENGINEERS
9921 Mariposa Road, Suite 210
Hesperia, CA 92344
Tel (949) 462-2200 • Fax (949) 463-3201
www.knastructural.com
KNA JOB NO.: 463.116

musco Lighting
CORPORATE OFFICE:
P.O. Box 808
100 1st Avenue West
Oskaloosa, Iowa 52577
800/825-6020

LICENSED ARCHITECT
THOMAS W. KRUSE
No. 61585
REN. 02/25
STATE OF CALIFORNIA

DRAWING TITLE: POLE DETAIL
SCALE: SEE PLAN
REVISIONS:
REFERENCE:

PROJECT NO. 221419

DATE: 10/18/2022

DRAWN BY: C.Hensley

DRAWING NO. MS1
2 OF 5

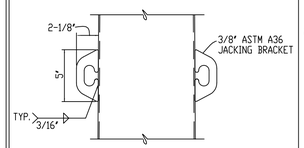

A JACKING BRACKET DETAIL
N.T.S. DSA-3RDSHEET_T

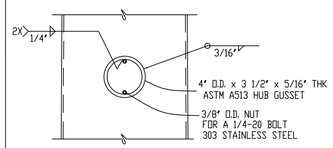

B HUB DETAIL
N.T.S. DSA-3RDSHEET_T

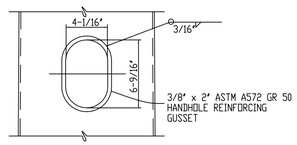

C HANDHOLE SLEEVE DETAIL
N.T.S. DSA-3RDSHEET_T

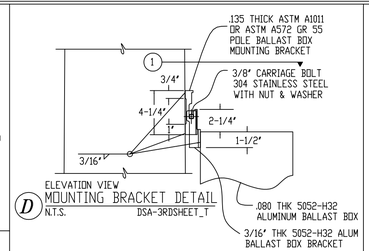

ELEVATION VIEW
D MOUNTING BRACKET DETAIL
N.T.S. DSA-3RDSHEET_T

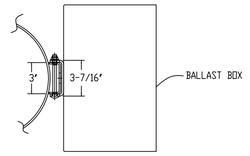

PLAN VIEW 1

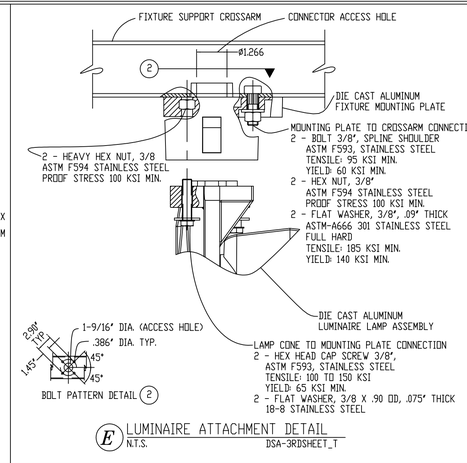

E LUMINAIRE ATTACHMENT DETAIL
N.T.S. DSA-3RDSHEET_T

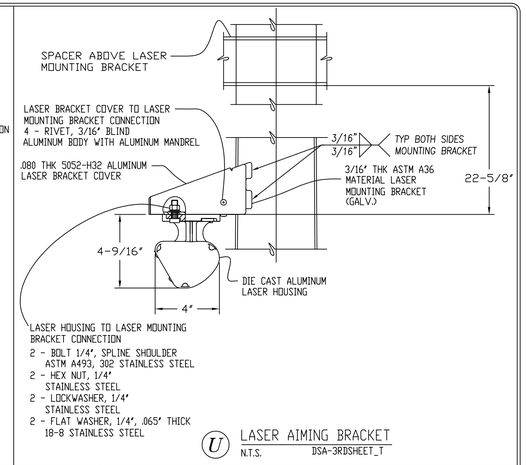

U LASER AIMING BRACKET
N.T.S. DSA-3RDSHEET_T

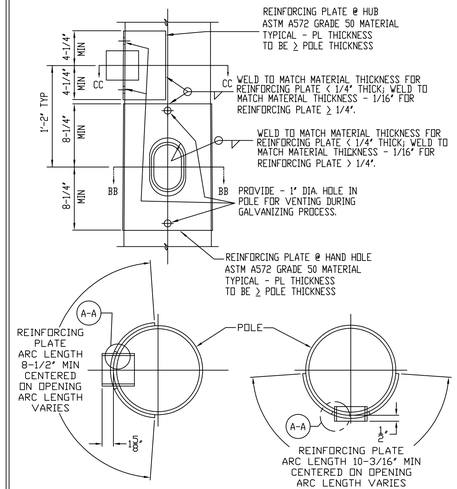

H HANDHOLE/HUB REINFORCING GUSSET
N.T.S.

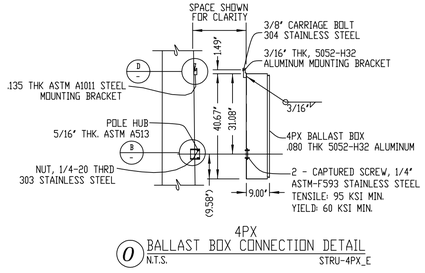

4PX
O BALLAST BOX CONNECTION DETAIL
N.T.S. STRU-4PX_E

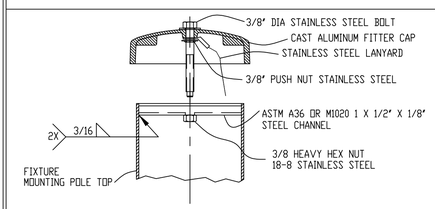

F FITTER CAP DETAIL
N.T.S. DSA-3RDSHEET_T

Information contained herein is the confidential property of Musco Sports Lighting, LLC and/or its parent companies, affiliates, successors and assigns. Reproduction, distribution, or use of the information other than its limited, intended purpose without express written permission is prohibited. Musco products referenced or shown are protected by one or more of the following patents. U.S. Patents: 4947303; 4994718; 5075828; 5134557; 5161883; 5211473; 5229681; 5377611; 5398478; 5423281; 5426577; 5600537; 5794387; 5856721; 6036338; 6203176; 6250596; 6340790; 6398392; 6681110; 6833675; 6929385; 6969034; 6988697; 7059572; D337168; D353797; D353911; D411096. Other patents pending.

IDENTIFICATION STAMP
DIV. OF THE STATE ARCHITECT
APP: 03-122664 INC:
REVIEWED FOR
SS ☑ FLS ☑ ACS ☑
DATE: 05/12/2023

Highland HS Pool
FIELD LIGHTING
Bakersfield,CA

LICENSED ARCHITECT
THOMAS W. KRUSE
NO. C15585
REN. 02/25
STATE OF CALIFORNIA

REGISTERED ENGINEER
CIVIL
No. 45061
Exp. 6-30-23
STRUCTURAL
STATE OF CALIFORNIA

CONSULTANT
KNA STRUCTURAL ENGINEERS
9931 Mulhall Boulevard, Irvine, CA 92618
Tel (949) 453-2200 Fax (949) 453-2201
www.knastructural.com
KNA JOB NO.: 453.116

musco Lighting
CORPORATE OFFICE:
P.O. Box 808
100 1st Avenue West
Oskaloosa, Iowa 52577
800/825-6020

DRAWING TITLE: ATTACHMENT DETAILS
SCALE: SEE PLAN
REVISIONS:
REFERENCE:

PROJECT NO. 221419

DATE: 10/18/2022

DRAWN BY: C.Hensley

DRAWING NO. MD1
3 OF 5

STRU-MDS

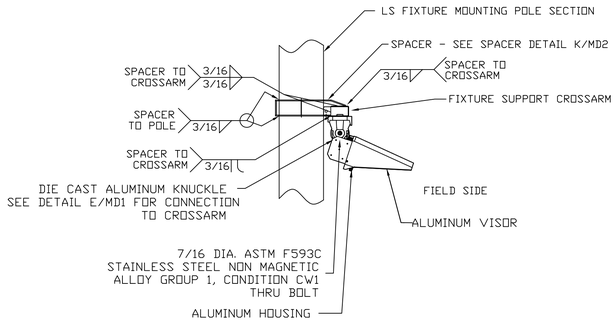

J LIGHT FIXTURE (TYPICAL)
N.T.S. DSA-WEDGE4-WELDON_A

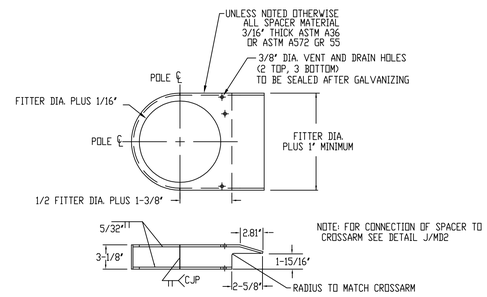

K SPACER DETAIL
N.T.S. DSA-SPACERWELDON_K



Information contained herein is the confidential property of Musco Sports Lighting, LLC and/or its parent companies, affiliates, successors and assigns. Reproduction, distribution, or use of the information other than its limited, intended purpose without express written permission is prohibited. Musco products referenced or shown are protected by one or more of the following patents. U.S. Patents: 4947303; 4994718; 5075828; 5134557; 5161883; 5211473; 5229681; 5377611; 5398478; 5423281; 5426577; 5600537; 5794387; 5856721; 6036338; 6203176; 6250596; 6340790; 6398392; 6681110; 6833675; 6929385; 6969034; 6988697; 7059572; D337168; D353797; D353911; D411096. Other patents pending.

IDENTIFICATION STAMP
DIV. OF THE STATE ARCHITECT
APP: 03-122664 INC:
REVIEWED FOR
SS ☑ FLS ☑ ACS ☑
DATE: 05/12/2023

Highland HS Pool
FIELD LIGHTING
Bakersfield,CA

REGISTERED PROFESSIONAL ENGINEER
STRUCTURAL
No. 4506
Exp. 6-30-23
STATE OF CALIFORNIA

CONSULTANT
KNA STRUCTURAL ENGINEERS
9931 Muirlands Boulevard, Irvine, CA 92618
Tel (949) 462-3200 • Fax (949) 462-3201
www.knastructural.com
KNA JOB NO.: 463.116

musco Lighting
CORPORATE OFFICE:
P.O. Box 808
100 1st Avenue West
Oskaloosa, Iowa 52577
800/825-6020

DRAWING TITLE: ATTACHMENT DETAILS
SCALE: SEE PLAN
REVISIONS:
REFERENCE:

PROJECT NO. 221419
DATE: 10/18/2022
DRAWN BY: C.Hensley
DRAWING NO. MD2
4 OF 5
STRU-MD2

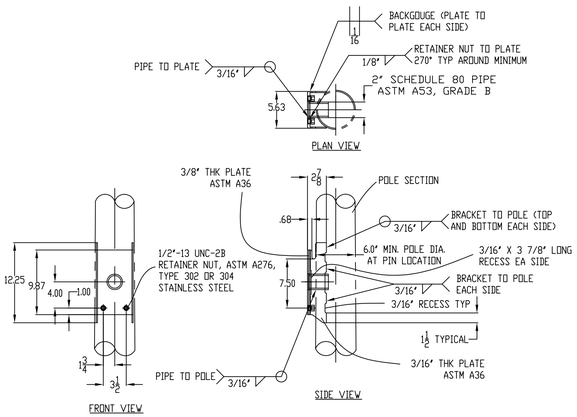

A BRACKET DETAIL
N.T.S. DSA-Brk-Dtl-L_A

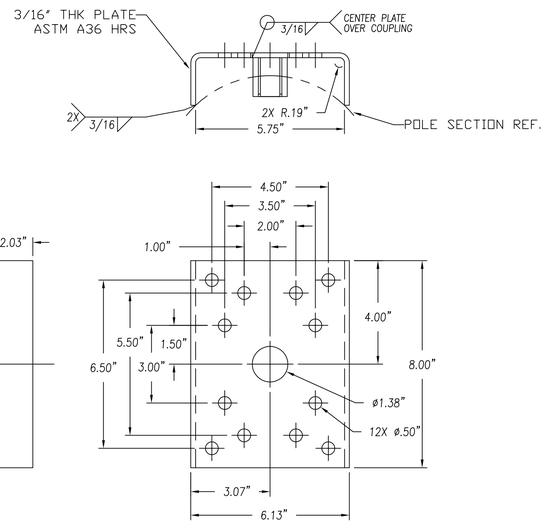

D 1P CAMERA CHANNEL
N.T.S.

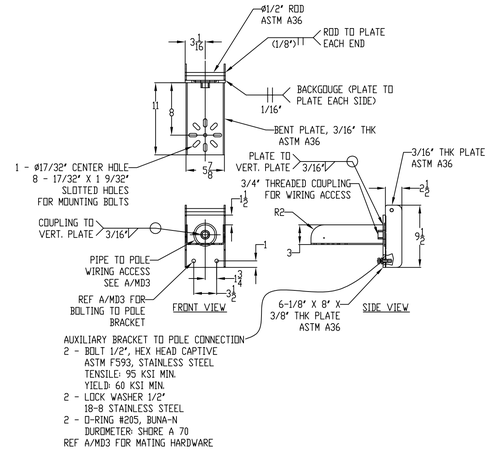

Q 1P INVERTED TRUNNION MOUNT
N.T.S. DSA-1P INV TRUNNION_A

Information contained herein is the confidential property of Musco Sports Lighting, LLC and/or its parent companies, affiliates, successors and assigns. Reproduction, distribution, or use of the information other than its limited, intended purpose without express written permission is prohibited. Musco products referenced or shown are protected by one or more of the following patents. U.S. Patents: 4947303; 4994718; 5075828; 5134557; 5161883; 5211473; 5229681; 5377611; 5398478; 5423281; 5426577; 5600537; 5794387; 5856721; 6036338; 6203176; 6250596; 6340790; 6398392; 6681110; 6833675; 6929385; 6969034; 6988697; 7059572; D337168; D353797; D353911; D411096. Other patents pending.

IDENTIFICATION STAMP
DIV. OF THE STATE ARCHITECT
APP: 03-122664 INC:
REVIEWED FOR
SS ☑ FLS ☑ ACS ☑
DATE: 05/12/2023

Highland HS Pool
FIELD LIGHTING
Bakersfield,CA

LICENSED STRUCTURAL ENGINEER
NO. 4506
Exp. 6-30-23
STATE OF CALIFORNIA

CONSULTANT
KNA STRUCTURAL ENGINEERS
9931 Muirlands Boulevard, Irvine, CA 92618
Tel (949) 461-3200 Fax (949) 461-3201
www.knastructural.com
KNA JOB NO.: 463.116

LICENSED ARCHITECT
THOMAS W. KRUSE
NO. C15585
REN. 02/25
STATE OF CALIFORNIA

musco Lighting
CORPORATE OFFICE:
P.O. Box 808
100 1st Avenue West
Oskaloosa, Iowa 52577
800/825-6020

DRAWING TITLE: ATTACHMENT DETAILS
SCALE: SEE PLAN
REVISIONS:
REFERENCE:

PROJECT NO. 221419
DATE: 10/18/2022
DRAWN BY: C.Hensley
DRAWING NO. MD3
5 OF 5

STRU-MD1

DSA 103-19: LISTING OF STRUCTURAL TESTS & SPECIAL INSPECTIONS, 2019 CBC

Application Number:	**School Name:**	**School District:**
03-122664	Highland High Shcool	Kern High School District
DSA File Number:	**Increment Number:**	**Date Created:**
15-H3		2023-04-07 16:47:18

2019 CBC

IMPORTANT: This form is only a summary list of structural tests and some of the special inspections required for the project. Generally, the structural tests and special inspections noted on this form are those that will be performed by the Geotechnical Engineer of Record, Laboratory of Record, or Special Inspector. The actual complete test and inspection program must be performed as detailed on the DSA approved documents. The appendix at the bottom of this form identifies work NOT subject to DSA requirements for special inspection or structural testing. The project inspector is responsible for providing inspection of all facets of construction, including but not limited to, special inspections not listed on this form such as structural wood framing, high-load wood diaphragms, cold-formed steel framing, anchorage of non-structural components, etc., per Title 24, Part 2, Chapter 17A (2019 CBC).

****NOTE:** Undefined section and table references found in this document are from the CBC, or California Building Code.

KEY TO COLUMNS

1. TYPE	2. PERFORMED BY
Continuous – Indicates that a continuous special inspection is required **Periodic** – Indicates that a periodic special inspection is required **Test** – Indicates that a test is required	**GE** – Indicates that the special inspection shall be performed by a registered geotechnical engineer or his or her authorized representative. **LOR** – Indicates that the test or special inspection shall be performed by a testing laboratory accepted in the DSA Laboratory Evaluation and Acceptance (LEA) Program. See CAC Section 4-335. **PI –** Indicates that the special inspection may be performed by a project inspector when specifically approved by DSA. **SI** – Indicates that the special inspection shall be performed by an appropriately qualified/approved special inspector.

DSA 103-19: LISTING OF STRUCTURAL TESTS & SPECIAL INSPECTIONS (SOILS), 2019 CBC

Table 1705A.6, Table 1705A.7, Table 1705A.8

Application Number:	**School Name:**	**School District:**
03-122664	Highland High Shcool	Kern High School District
DSA File Number:	**Increment Number:**	**Date Created:**
15-H3		2023-04-07 16:47:18

Geotechnical Reports: Project has a geotechnical report, or CDs indicate soils special inspection is required by GE

	S1. GENERAL:			
	Test or Special Inspection	**Type**	**Performed By**	**Code References and Notes**
☑	**a.** Verify that: • Site has been prepared properly prior to placement of controlled fill and/or excavations for foundations. • Foundation excavations are extended to proper depth and have reached proper material. • Materials below footings are adequate to achieve the design bearing capacity.	**Periodic**	**GE***	* By geotechnical engineer or his or her qualified representative. (See Appendix for exemptions.)

	S2. SOIL COMPACTION AND FILL:			
	Test or Special Inspection	**Type**	**Performed By**	**Code References and Notes**
☑	**a.** Perform classification and testing of fill materials.	**Test**	**LOR***	* Under the supervision of the geotechnical engineer.
☑	**b.** Verify use of proper materials, densities and inspect lift thicknesses, placement and compaction during placement of fill.	**Continuous**	**GE***	* By geotechnical engineer or his or her qualified representative. (Refer to specific items identified in the Appendix for exemptions where soils SI and testing may be conducted under the supervision of a geotechnical engineer or LOR's engineering manager. In such cases, the LOR's form DSA 291 shall satisfy the soil SI and test reporting requirements for the exempt items.)
☑	**c.** Compaction testing.	**Test**	**LOR***	* Under the supervision of the geotechnical engineer. (Refer to specific items identified in the Appendix for exemptions where soils testing may be conducted under the supervision of a geotechnical engineer or LOR's engineering manager. In such cases, the LOR's form DSA 291 shall satisfy the soil test reporting requirements for the exempt items.)

DSA 103-19: LISTING OF STRUCTURAL TESTS & SPECIAL INSPECTIONS (SOILS), 2019 CBC

Table 1705A.6, Table 1705A.7, Table 1705A.8

Application Number:	**School Name:**	**School District:**
03-122664	Highland High Shcool	Kern High School District
DSA File Number:	**Increment Number:**	**Date Created:**
15-H3		2023-04-07 16:47:18

	S3. DRIVEN DEEP FOUNDATIONS (PILES):			
	Test or Special Inspection	**Type**	**Performed By**	**Code References and Notes**
☐	**a.** Verify pile materials, sizes and lengths comply with the requirements.	**Continuous**	**GE***	* By geotechnical engineer or his or her qualified representative.
☐	**b.** Determine capacities of test piles and conduct additional load tests as required.	**Test**	**LOR***	* Under the supervision of the geotechnical engineer.
☐	**c.** Inspect driving operations and maintain complete and accurate records for each pile.	**Continuous**	**GE***	* By geotechnical engineer or his or her qualified representative.
☐	**d.** Verify locations of piles and their plumbness, confirm type and size of hammer, record number of blows per foot of penetration, determine required penetrations to achieve design capacity, record tip and butt elevations and record any pile damage.	**Continuous**	**GE***	* By geotechnical engineer or his or her qualified representative.
☐	**e.** Steel piles.	Provide tests and inspections per STEEL section below.		
☐	**f.** Concrete piles and concrete filled piles.	Provide tests and inspections per CONCRETE section below.		
☐	**g.** For specialty piles, perform additional inspections as determined by the registered design professional in responsible charge.	*	*	* As defined on drawings or specifications.

	S4. CAST-IN-PLACE DEEP FOUNDATIONS (PIERS):			
	Test or Special Inspection	**Type**	**Performed By**	**Code References and Note**
☑	**a.** Inspect drilling operations and maintain complete and accurate records for each pier.	**Continuous**	**GE***	* By geotechnical engineer or his or her qualified representative. (See Appendix for exemptions.)

DSA 103-19: LISTING OF STRUCTURAL TESTS & SPECIAL INSPECTIONS (SOILS), 2019 CBC

Table 1705A.6, Table 1705A.7, Table 1705A.8

Application Number:	**School Name:**	**School District:**
03-122664	Highland High Shcool	Kern High School District
DSA File Number:	**Increment Number:**	**Date Created:**
15-H3		2023-04-07 16:47:18

	Test or Special Inspection	**Type**	**Performed By**	**Code References and Note**
☑	**b.** Verify pier locations, diameters, plumbness, bell diameters (if applicable), lengths and embedment into bedrock (if applicable); record concrete or grout volumes.	**Continuous**	**GE***	* By geotechnical engineer or his or her qualified representative. (See Appendix for exemptions.)
☑	**c.** Confirm adequate end strata bearing capacity.	**Continuous**	**GE***	* By geotechnical engineer or his or her qualified representative. (See Appendix for exemptions.)
☑	**d.** Concrete piers.	Provide tests and inspections per CONCRETE section below.		

	S5. RETAINING WALLS:			
	Test or Special Inspection	**Type**	**Performed By**	**Code References and Notes**
☑	**a.** Placement, compaction and inspection of backfill.	**Continuous**	**GE***	**1705A.6.1.** * By geotechnical engineer or his or her qualified representative. (See S2 above).
☑	**b.** Placement of soil reinforcement and/or drainage devices.	**Continuous**	**GE***	* By geotechnical engineer or his or her qualified representative.
☐	**c.** Segmental retaining walls; inspect placement of units, dowels, connectors, etc.	**Continuous**	**GE***	* By geotechnical engineer or his or her qualified representative. See DSA IR 16-3.
☑	**d.** Concrete retaining walls.	Provide tests and inspections per CONCRETE section below.		
☑	**e.** Masonry retaining walls.	Provide tests and inspections per MASONRY section below.		

DSA 103-19: LISTING OF STRUCTURAL TESTS & SPECIAL INSPECTIONS (SOILS), 2019 CBC

Table 1705A.6, Table 1705A.7, Table 1705A.8

Application Number:	**School Name:**	**School District:**
03-122664	Highland High Shcool	Kern High School District
DSA File Number:	**Increment Number:**	**Date Created:**
15-H3		2023-04-07 16:47:18

	S6. OTHER SOILS:			
	Test or Special Inspection	**Type**	**Performed By**	**Code References and Notes**
☐	**a.** Soil Improvements	**Test**	**GE***	Submit a comprehensive report documenting final soil improvements constructed, construction observation and the results of the confirmation testing and analysis to CGS for final acceptance. * By geotechnical engineer or his or her qualified representative.
☐	**b.** Inspection of Soil Improvements	**Continuous**	**GE***	* By geotechnical engineer or his or her qualified representative.
☐	**c.**			

DSA 103-19: LISTING OF STRUCTURAL TESTS & SPECIAL INSPECTIONS (CONCRETE), 2019 CBC

Table 1705A.3; ACI 318-14 Sections 26.12 & 26.13

Application Number:	**School Name:**	**School District:**
03-122664	Highland High Shcool	Kern High School District
DSA File Number:	**Increment Number:**	**Date Created:**
15-H3		2023-04-07 16:47:18

	C1. CAST-IN-PLACE CONCRETE			
	Test or Special Inspection	**Type**	**Performed By**	**Code References and Notes**
☑	**a.** Verify use of required design mix.	**Periodic**	**SI**	**Table 1705A.3 Item 5, 1910A.1.**
☑	**b.** Identifiy, sample, and test reinforcing steel.	**Test**	**LOR**	**1910A.2;** ACI 318-14 Section 26.6.1.2; DSA IR 17-10. (See Appendix for exemptions.)
☑	**c.** During concrete placement, fabricate specimens for strength tests, perform slump and air content tests, and determine the temperature of the concrete.	**Test**	**LOR**	**Table 1705A.3 Item 6**; ACI 318-14 Sections 26.5 & 26.12.
☑	**d.** Test concrete (f'_c).	**Test**	**LOR**	**1905A.1.15;** ACI 318-14 Section 26.12.
☑	**e.** Batch plant inspection: **Continuous**	**See Notes**	**SI**	Default of **'Continuous'** per **1705A.3.3**. If approved by DSA, batch plant inspection may be reduced to **'Periodic'** subject to requirements in Section **1705A.3.3.1,** or eliminated per **1705A.3.3.2.** See IR 17-13. (See Appendix for exemptions.)
☑	**f.** Welding of reinforcing steel.	Provide special inspection per STEEL, Category S/A4(d) & (e) and/or S/A5(g) & (h) below.		

	C2. PRESTRESSED / POST-TENSIONED CONCRETE (IN ADDITION TO SECTION C1):			
	Test or Special Inspection	**Type**	**Performed By**	**Code References and Notes**
☑	**a.** Sample and test prestressing tendons and anchorages.	**Test**	**LOR**	**1705A.3.4, 1910A.3**
☑	**b.** Inspect placement of prestressing tendons.	**Periodic**	**SI**	**1705A.3.4, Table 1705A.3 Items 1 & 9.**

	Test or Special Inspection	Type	Performed By	Code References and Notes
☐	**c.** Verify in-situ concrete strength prior to stressing of post-tensioning tendons.	**Periodic**	**SI**	**Table 1705A.3 Item 11.** Special inspector to verify specified concrete strength test prior to stressing.
☑	**d.** Inspect application of post-tensioning or prestressing forces and grouting of bonded prestressing tendons.	**Continuous**	**SI**	**1705A.3.4, Table 1705A.3 Item 9;** ACI 318-14 Section 26.13

	C3. PRECAST CONCRETE (IN ADDITION TO SECTION C1):			
	Test or Special Inspection	**Type**	**Performed By**	**Code References and Notes**
☐	**a.** Inspect fabrication of precast concrete members.	**Continuous**	**SI**	ACI 318-14 Section 26.13.
☐	**b.** Inspect erection of precast concrete members.	**Periodic**	**SI***	**Table 1705A.3 Item 10.** * May be performed by PI when specifically approved by DSA.

	C4. SHOTCRETE (IN ADDITION TO SECTION C1):			
	Test or Special Inspection	**Type**	**Performed By**	**Code References and Notes**
☑	**a.** Inspect shotcrete placement for proper application techniques.	**Continuous**	**SI**	**1705A.19, Table 1705A.3 Item 7, 1908A.6, 1908A.7, 1908A.8, 1908A.9, 1908A.11, 1908A.12.** See ACI 506.2-13 Section 3.4, ACI 506R-16.
☑	**b.** Sample and test shotcrete (f'_c).	**Test**	**LOR**	**1908A.5, 1908A.10.**

DSA 103-19: LISTING OF STRUCTURAL TESTS & SPECIAL INSPECTIONS (CONCRETE), 2019 CBC

Table 1705A.3; ACI 318-14 Sections 26.12 & 26.13

Application Number:	**School Name:**	**School District:**
03-122664	Highland High Shcool	Kern High School District
DSA File Number:	**Increment Number:**	**Date Created:**
15-H3		2023-04-07 16:47:18

	C5. POST-INSTALLED ANCHORS:			
	Test or Special Inspection	**Type**	**Performed By**	**Code References and Notes**
☑	**a.** Inspect installation of post-installed anchors	**See Notes**	**SI***	**1617A.1.19, Table 1705A.3 Item 4a (Continuous) & 4b (Periodic), 1705A.3.8** (See Appendix for exemptions). ACI 318-14 Sections 17.8 & 26.13. * May be performed by the project inspector when specifically approved by DSA.
☑	**b.** Test post-installed anchors.	**Test**	**LOR**	**1910A.5.** (See Appendix for exemptions.)

	C6. OTHER CONCRETE:			
	Test or Special Inspection	**Type**	**Performed By**	**Code References and Notes**
☐	**a.**			

DSA 103-19: LISTING OF STRUCTURAL TESTS & SPECIAL INSPECTIONS (MASONRY), 2019 CBC

1705A.4; TMS 602-16, Tables 3 and 4.

Application Number:	**School Name:**	**School District:**
03-122664	Highland High Shcool	Kern High School District
DSA File Number:	**Increment Number:**	**Date Created:**
15-H3		2023-04-07 16:47:18

	M1. STRUCTURAL MASONRY: **(f'm = 2500 psi)**			
	Test or Special Inspection	**Type**	**Performed By**	**Code References and Notes**
☑	**a.** Mill certificate indicates compliance with requirements for reinforcement, anchors, ties, fasteners and metal accessories. See item C1(b) for identification, sampling and testing of reinforcing steel.	**Periodic**	**SI***	**2103A.4**; TMS 602-13 Article 1.5B.2 & 2.4. * To be performed by qualified LOR representative. Applicable testing by LOR. See IR 17-10.16 for unidentified reinforcing steel.
☑	**b.** Producer's certificate of compliance for masonry units, mortar and grout materials.	**Test**	**LOR**	**1705A.4, 2103A.2.1, 2103A.3, 2103A.5;** TMS 602-16 Articles 1.5B.2 2.1, 2.2, 2.6A and 2.6B, and Table 6 footnote 3.
☑	**c.** Test masonry (f'_m).	**Test**	**LOR**	**1705A.4. For Unit Strength: 2105A.3** (2114.6.1+); TMS 602-16 Articles 1.4B.2 ,1.5B.1 & 1.5B.2. **For Prism (required when f'_m > 2000 psi):2105A.2;** TMS 602-16 Articles 1.4B.3, 1.4B.4, 1.5B.1 & 1.5B.2.
☑	**d.** Verify proportions or properties of site-prepared, premixed or preblended mortar.	**Periodic**	**SI**	TMS 602-16, Table 3 Item 5, Table 4 Item 1a. DSA PR 20-01.
☑	**e.** Verify proportions or properties of site-prepared, premixed or preblended grout.	**Periodic**	**SI**	TMS 602-16, Table 3 Item 5, Table 4 Item 2d.
☑	**f.** Batch plant inspection: **Continuous**	**See Notes**	**SI**	Default of **'Continuous'** per **1705A.3.3**. If approved by DSA, batch plant inspection may be reduced to **'Periodic'** subject to requirements in Section **1705A.3.3.1,** or eliminated per **1705A.3.3.2.** See IR 17-13. (See Appendix for exemptions.)
☑	**g.** Test core-drilled samples.	**Test**	**LOR**	**2105A.4**. (See Appendix for exemptions.)
☑	**h.** Inspect preparation of prisms.	**Continuous**	**SI**	TMS 602-16 Articles 1.4.B.3 & 1.4.B.4 & Table 4 Item 4.
☑	**i.** Verify size, location and condition of all dowels, construction supporting masonry, etc.	**Periodic**	**SI**	
☑	**j.** Verify size, grade and type of reinforcement, connectors, and anchor bolts. Verify size and location of structural members.	**Periodic**	**SI**	TMS 602-16 Table 4, Items 1c & 3c.

DSA 103-19: LISTING OF STRUCTURAL TESTS & SPECIAL INSPECTIONS (MASONRY), 2019 CBC

1705A.4; TMS 602-16, Tables 3 and 4.

Application Number:	**School Name:**	**School District:**
03-122664	Highland High Shcool	Kern High School District
DSA File Number:	**Increment Number:**	**Date Created:**
15-H3		2023-04-07 16:47:18

	Test or Special Inspection	**Type**	**Performed By**	**Code References and Notes**
☑	**k.** Inspect placement of reinforcement, anchor bolts, and connectors.	**Continuous**	**SI**	TMS 602-16 Table 4 Item 2c.
☑	l. Placement, consolidation, and reconsolidation of grout.	**Continuous**	**SI**	TMS 602-16 Table 4 Item 3h.
☑	**m.** Inspect placement of masonry units and construction of mortar joints.	**Periodic**	**SI**	TMS 602-16 Table 4 Item 3b.
☑	**n.** Verify preparation, construction and protection of masonry during cold weather (temperature below 40° F) or hot weather (temperature above 90° F).	**Periodic**	**SI***	TMS 602-16 Table 4 Item 3f. * May be performed by the project inspector when specifically approved by DSA.
☑	**o.** Inspect type, size and location of anchors and all other items to be embedded in masonry including other details of anchorage of masonry to structural members, frames and other construction.	**Continuous**	**SI**	TMS 602-16 Table 4 Item 3d.
☑	**p.** Inspect grout space, including mortar protrusions, prior to placement of grout.	**Continuous**	**SI**	TMS 602-16 Table 4 Item 2a.
☐	**q.** Welding of reinforcing steel.	TMS 602-16 Table 4 Item 3e. Provide special inspection per STEEL, Category S/A4(d) & (e) and/or S/A5(g) & (h) below.		

DSA 103-19: LISTING OF STRUCTURAL TESTS & SPECIAL INSPECTIONS (MASONRY), 2019 CBC

1705A.4; TMS 602-16, Tables 3 and 4.

Application Number:	**School Name:**	**School District:**
03-122664	Highland High Shcool	Kern High School District
DSA File Number:	**Increment Number:**	**Date Created:**
15-H3		2023-04-07 16:47:18

	Test or Special Inspection	**Type**	**Performed By**	**Code References and Notes**
	M2. VENEER OR GLASS BLOCK PARTITIONS:			
	Test or Special Inspection	**Type**	**Performed By**	**Code References and Notes**
☐	**a.** Verify proportions of siteprepared mortar and grout and/or verify certification of premixed mortar.	**Periodic**	**SI**	TMS 602-16 Table 3 Item 5 and Table 4 Items 1a & 2d.
☐	**b.** Inspect placement of units and construction of mortar joints.	**Periodic**	**SI**	TMS 602-16 Table 4 Item 3b.
☐	**c.** Inspect placement of wire, connectors and anchors	**Periodic**	**SI**	TMS 602-16 Table 4 Item 2c.
☐	**d.** Inspect type, size and location of anchors and all other items to be embedded in masonry veneer including details of anchorage of masonry to veneer backing, frames and other construction.	**Periodic**	**SI**	TMS 602-16 Table 4 Item 3d.
☐	**e.** Verify preparation, construction and protection of masonry during cold weather (temperature below 40° F) or hot weather (above 90° F).	**Periodic**	**SI***	TMS 602-16 Table 4 Item 3f. * May be performed by the project inspector when specifically approved by DSA.
☐	**f.** Test adhered veneer bond strength.	**Test**	**LOR**	**1410.2.1**; TMS 402 Article 12.3.2.4. **(Field constructed mock-up laboratory tested in accordance with ASTM C482).**

	M3. POST-INSTALLED ANCHORS IN MASONRY:			
	Test or Special Inspection	**Type**	**Performed By**	**Code References and Notes**
☑	**a.** Inspect installation of postinstalled anchors	**See Notes**	**SI***	**1617A.1.19, 1705A.4, Table 1705A.3 Item 4a (Continuous) & 4b (Periodic);** ACI 318-14 Sections 17.8 & 26.13. * May be performed by the project inspector when specifically approved by DSA. (See Appendix for exemptions.)

DSA 103-19: LISTING OF STRUCTURAL TESTS & SPECIAL INSPECTIONS (MASONRY), 2019 CBC

1705A.4; TMS 602-16, Tables 3 and 4.

Application Number:	**School Name:**	**School District:**
03-122664	Highland High Shcool	Kern High School District
DSA File Number:	**Increment Number:**	**Date Created:**
15-H3		2023-04-07 16:47:18

	Test or Special Inspection	**Type**	**Performed By**	**Code References and Notes**
☑	**b.** Test post-installed anchors.	**Test**	**LOR**	**1705A.4, 1910A.5.** (See Appendix for exemptions.)

	M4. OTHER MASONRY:			
	Test or Special Inspection	**Type**	**Performed By**	**Code References and Notes**
☐	**a.**			

DSA 103-19: LISTING OF STRUCTURAL TESTS & SPECIAL INSPECTIONS (STEEL AND ALUMNINUM), 2019 CBC

1705A.2.1, Table 1705A.2.1; AISC 303-16, AISC 341-16, AISC 358-16, AISC 360-16; AISI S100-16; RCSC 2014; AWS D1.1, AWS D1.2, AWS D1.3, AWS D1.4, AWS D1.8

Application Number:	**School Name:**	**School District:**
03-122664	Highland High Shcool	Kern High School District
DSA File Number:	**Increment Number:**	**Date Created:**
15-H3		2023-04-07 16:47:18

	S/A1. STRUCTURAL STEEL, COLD-FORMED STEEL AND ALUMINUM USED FOR STRUCTURAL PURPOSES			
	Test or Special Inspection	**Type**	**Performed By**	**Code References and Notes**
☑	**a.** Verify identification of all materials and: • Mill certificates indicate material properties that comply with requirements. • Material sizes, types and grades comply with requirements.	**Periodic**	*	**Table 1705A.2.1 Item 3a–3c.** 2202A.1**;** AISI S100-16 Section A3.1 & A3.2, AISI S240-15 Section A3 & A5, AISI S220-15 Sections A4 & A6. * By special inspector or qualified technician when performed off-site.
☑	**b.** Test unidentified materials	**Test**	**LOR**	**2202A.1.**
☑	**c.** Examine seam welds of HSS shapes	**Periodic**	**SI**	DSA IR 17-3.
☑	**d.** Verify and document steel fabrication per DSA-approved construction documents.	**Periodic**	**SI**	Not applicable to cold-formed steel light-frame construction, except for trusses (**1705A.2.4**).
☐	**e.** Buckling restrained braces.	**Test**	**LOR**	Testing and special inspections in accordance with IR 22-4.

	S/A2. HIGH-STRENGTH BOLTS:			
	Test or Special Inspection	**Type**	**Performed By**	**Code References and Notes**
☐	**a.** Verify identification markings and manufacturer's certificates of compliance conform to ASTM standards specified in the DSA-approved documents.	**Periodic**	**SI**	**Table 1705A.2.1 Items 1a & 1b, 2202A.1;** AISC 360-16 Section A3.3, J3.1, and N3.2; RCSC 2014 Section 1.5 & 2.1; DSA IR 17-8 & DSA IR 17-9.
☐	**b.** Test high-strength bolts, nuts and washers.	**Test**	**LOR**	**Table 1705A.2.1 Item 1c, 2213A.1**; RCSC 2014 Section 7.2; DSA IR 17-8.
☐	**c.** Bearing-type ("snug tight") connections.	**Periodic**	**SI**	**Table 1705A.2.1 Item 2a, 1705A.2.6, 2204A.2**; AISC 360-16 J3.1, J3.2, M2.5 & N5.6; RCSC 2014 Section 9.1; DSA IR 17-9.
☐	**d.** Pretensioned and slip-critical connections.	*	**SI**	**Table 1705A.2.1 Items 2b & 2c, 1705A.2.6, 2204A.2;** AISC 360-16 J3.1, J3.2, M2.5 & N5.6; RCSC 2014 Sections 9.2 & 9.3; DSA IR 17-9. * "Continuous" or "Periodic" depends on the tightening method used.

	S/A3. WELDING:			
	Test or Special Inspection	**Type**	**Performed By**	**Code References and Notes**
☑	**a.** Verify weld filler material identification markings per AWS designation listed on the DSA-approved documents and the WPS.	**Periodic**	**SI**	**1705A.2.5, Table 1705A.2.1 Items 4 & 5**; AWS D1.1 and AWS D1.8 for structural steel; AWS D1.2 for Aluminum; AWS D1.3 for cold-formed steel; AWS D1.4 for reinforcing steel; DSA IR 17-3.
☑	**b.** Verify weld filler material manufacturer's certificate of compliance.	**Periodic**	**SI**	DSA IR 17-3.
☑	**c.** Verify WPS, welder qualifications and equipment.	**Periodic**	**SI**	DSA IR 17-3.

	S/A4. SHOP WELDING (IN ADDITION TO SECTION S/A3):			
	Test or Special Inspection	**Type**	**Performed By**	**Code References and Notes**
☑	**a.** Inspect groove welds, multi-pass fillet welds, single pass fillet welds > 5/16", plug and slot welds.	**Continuous**	**SI**	**Table 1705A.2.1 Items 5a.1–4;** AISC 360-16 (and AISC 341-16 as applicable); DSA IR 17-3.
☑	**b.** Inspect single-pass fillet welds ≤ 5/16", floor and roof deck welds.	**Periodic**	**SI**	**1705A.2.2, Table 1705A.2.1 Items 5a.5 & 5a.6;** AISC 360-16 (and AISC 341-16 as applicable); DSA IR 17-3.
☐	**c.** Inspect welding of stairs and railing systems.	**Periodic**	**SI**	**1705A.2.1**; AISC 360-16 (and AISC 341-16 as applicable); AWS D1.1 & D1.3; DSA IR 17-3.
☑	**d.** Verification of reinforcing steel weldability other than ASTM A706.	**Periodic**	**SI**	**1705A.3.1**; AWS D1.4; DSA IR 17-3. Verify carbon equivalent reported on mill certificates.
☑	**e.** Inspect welding of reinforcing steel.	**Continuous**	**SI**	**Table 1705A.2.1 Item 5b, 1705A.3.1, Table 1705A.3 Item 2, 1903A.8;** AWS D1.4; DSA IR 17-3.

DSA 103-19: LISTING OF STRUCTURAL TESTS & SPECIAL INSPECTIONS (STEEL AND ALUMNINUM), 2019 CBC

1705A.2.1, Table 1705A.2.1; AISC 303-16, AISC 341-16, AISC 358-16, AISC 360-16; AISI S100-16; RCSC 2014; AWS D1.1, AWS D1.2, AWS D1.3, AWS D1.4, AWS D1.8

Application Number:	**School Name:**	**School District:**
03-122664	Highland High Shcool	Kern High School District
DSA File Number:	**Increment Number:**	**Date Created:**
15-H3		2023-04-07 16:47:18

	Test or Special Inspection	Type	Performed By	Code References and Notes
	S/A5. FIELD WELDING (IN ADDITION TO SECTION S/A3):			
	Test or Special Inspection	**Type**	**Performed By**	**Code References and Notes**
☑	**a.** Inspect groove welds, multi-pass fillet welds, single pass fillet welds > 5/16", plug and slot welds.	**Continuous**	**SI**	**Table 1705A.2.1 Items 5a.1–4;** AISC 360-16 (AISC 341-16 as applicable); DSA IR 17-3.
☑	**b.** Inspect single-pass fillet welds ≤ 5/16”.	**Periodic**	**SI**	**Table 1705A.2.1 Item 5a.5;** AISC 360-16 (AISC 341-16 as applicable); DSA IR 17-3.
☐	**c.** Inspect end-welded studs (ASTM A-108) installation (including bend test).	**Periodic**	**SI**	**2213A.2**; AISC 360-16 (AISC 341-16 as applicable); AWS D1.1; DSA IR 17-3.
☐	**d.** Inspect floor and roof deck welds.	**Periodic**	**SI**	**1705A.2.2, Table 1705A.2.1 Item 5a.6;** AISC 360-16 (AISC 341-16 as applicable); AWS D1.3; DSA IR 17-3.
☐	**e.** Inspect welding of structural cold-formed steel.	**Periodic**	**SI***	**1705A.2.5; AWS D1.3; DSA IR 17-3.** The quality control provisions of AISI S240-15 Chapter D shall also apply. * May be performed by the project inspector when specifically approved by DSA.
☐	**f.** Inspect welding of stairs and railing systems.	**Periodic**	**SI***	**1705A.2.1;** AISC 360-16 (AISC 341-16 as applicable); AWS D1.1 & D1.3; DSA IR 17-3. * May be performed by the project inspector when specifically approved by DSA.
☑	**g.** Verification of reinforcing steel weldability.	**Periodic**	**SI**	**1705A.3.1**; AWS D1.4; DSA IR 17-3. Verify carbon equivalent reported on mill certificates.
☑	**h.** Inspect welding of reinforcing steel.	**Continuous**	**SI**	**Table 1705A.2.1 Item 5b, 1705A.3.1, Table 1705A.3 Item 2, 1903A.8;** AWS D1.4; DSA IR 17-3.

	Test or Special Inspection	Type	Performed By	Code References and Notes
	S/A6. NONDESTRUCTIVE TESTING:			
	Test or Special Inspection	**Type**	**Performed By**	**Code References and Notes**
☐	**a.** Ultrasonic	**Test**	**LOR**	**1705A.2.1, 1705A.2.5;** AISC 341-16 J6.2, AISC 360-16 N5.5; ANSI/ASNT CP-189, SNT-TC-1A; AWS D1.1, AWS D1.8; DSA IR 17-2.
☐	**b.** Magnetic Particle	**Test**	**LOR**	**1705A.2.1, 1705A.2.5;** AISC 341-16 J6.2, AISC 360-16 N5.5; ANSI/ASNT CP-189, SNT-TC-1A; AWS D1.1, AWS D1.8; DSA IR 17-2.
☐	**c.**	**Test**	**LOR**	

	S/A7. STEEL JOISTS AND TRUSSES:			
	Test or Special Inspection	**Type**	**Performed By**	**Code References and Notes**
☐	**a.** Verify size, type and grade for all chord and web members as well as connectors and weld filler material; verify joist profile, dimensions and camber (if applicable); verify all weld locations, lengths and profiles; mark or tag each joist.	**Continuous**	**SI**	**1705A.2.3, Table 1705A.2.3;** AWS D1.1; DSA IR 22-3 for steel joists only. **1705A.2.4;** AWS D1.3 for cold-formed steel trusses.

Application Number:	**School Name:**	**School District:**
03-122664	Highland High Shcool	Kern High School District
DSA File Number:	**Increment Number:**	**Date Created:**
15-H3		2023-04-07 16:47:18

	Test or Special Inspection	**Type**	**Performed By**	**Code References and Notes**
	S/A8. SPRAY APPLIED FIRE-PROOFING:			
	Test or Special Inspection	**Type**	**Performed By**	**Code References and Notes**
☐	**a.** Examine structural steel surface conditions, inspect application, take samples, measure thickness and verify compliance of all aspects of application with DSA-approved documents.	**Periodic**	**SI**	**1705A.14.**
☐	**b.** Test bond strength.	**Test**	**LOR**	**1705A.14.6.**
☐	**c.** Test density.	**Test**	**LOR**	**1705A.14.5.**

	S/A9. ANCHOR BOLTS AND ANCHOR RODS:			
	Test or Special Inspection	**Type**	**Performed By**	**Code References and Notes**
☐	**a.** Anchor Bolts and Anchor Rods	**Test**	**LOR**	Sample and test anchor bolts and anchor rods not readily identifiable per procedures noted in DSA IR 17-11.
☐	**b.** Threaded rod not used for foundation anchorage.	**Test**	**LOR**	Sample and test threaded rods not readily identifiable per procedures noted in DSA IR 17-11.

	S/A10. Other Steel			
	Test or Special Inspection	**Type**	**Performed By**	**Code References and Notes**
☐	**a.**			

DSA 103-19: LISTING OF STRUCTURAL TESTS & SPECIAL INSPECTIONS (OTHER), 2019 CBC

Application Number:
03-122664
School Name:
Highland High Shcool
School District:
Kern High School District
DSA File Number:
15-H3
Increment Number:
Date Created:
2023-04-07 16:47:18

	X1. OTHER:			
	Test or Special Inspection	**Type**	**Performed By**	**Code References and Notes**
☐	**a.** Load test for identified product(s):	**Test**	**LOR**	**1709A.2, 1709A.3**. Testing is not required for: 1) a product with a valid evaluation service report per DSA IR A-5, or 2) a product that can be justified by structural calculation.
☐	**b.** Installation torque for non-HS bolts	**Continuous**	**SI***	Applicable to communication towers identified as Essential Service Facility Projects (ESFP). Calibrated wrench use required, verified by SI during installation. DSA Policy PL 18-01: Communication Towers, Poles and Buildings Utilized by State Agencies for Essential Services Communications.*EXCEPTION: Non-ESFP may use PI without need for notification to DSA.
☑	**c.** Overlap Jacking Splices		**PI**	Overlap splices of pole sections during jacking operations

Appendix: Work Exempt from DSA Requirements for Structural Tests / Special Inspections

Application Number:	School Name:	School District:
03-122664	Highland High Shcool	Kern High School District
DSA File Number:	**Increment Number:**	**Date Created:**
15-H3		2023-04-07 16:47:18

Exempt items given in DSA IR A-22 or the 2019 CBC (including DSA amendments) and those items identified below with a check mark by the design professional are NOT subject to DSA requirements for the structural tests **/** special inspections noted. **Items marked as exempt shall be identified on the approved construction documents**. The project inspector shall verify all construction complies with the approved construction documents.

	SOILS:
☐	1. Deep foundations acting as a cantilever footing designed based on minimum allowable pressures per CBC Table 1806A.2 and having no geotechnical report for the following cases: A) free standing sign or scoreboard, B) cell or antenna towers and poles less than 35'-0" tall (e.g., lighting poles, flag poles, poles supporting open mesh fences, etc.), C) single-story structure with dead load less than 5 psf (e.g., open fabric shade structure), or D) covered walkway structure with an apex height less than 10'-0" above adjacent grade.
☐	2. Shallow foundations, etc. are exempt from special inspections and testing by a Geotechnical Engineer for the following cases: A) buildings without a geotechnical report and meeting the exception item #1 criteria in CBC Section 1803A.2 supported by native soil (any excavation depth) or fill soil (not exceeding 12" depth per CBC Section 1804A.6), B) soil scarification/recompaction not exceeding 12" depth, C) native or fill soil supporting exterior non-structural flatwork (e.g., sidewalks, site concrete ramps, site stairs, parking lots, driveways, etc.), D) unpaved landscaping and playground areas, or E) utility trench backfill.

	CONCRETE/MASONRY:
☐	1. Post-installed anchors for the following: A) exempt non-structural components (e.g., mechanical, electrical, plumbing equipment - see item 7 for "Welding" in the Appendix below) given in CBC Section 1617A.1.18 (which replaces ASCE 7-16, Section 13.1.4) or B) interior nonstructural wall partitions meeting criteria listed in exempt item 3 for "Welding."
☐	2. Concrete batch plant inspection is not required for items given in CBC Section 1705A.3.3.2 subject to the requirements and limitations in that section.
☐	3. Non-bearing non-shear masonry walls may be exempt from certain DSA masonry testing and special inspection items as allowed per DSA IR 21-1.16. Refer to construction documents for specific exemptions accordingly for each applicable wall condition.
☐	4. Epoxy shear dowels in site flatwork and/or other non-structural concrete.

Appendix: Work Exempt from DSA Requirements for Structural Tests / Special Inspections

Application Number:	School Name:	School District:
03-122664	Highland High Shcool	Kern High School District
DSA File Number:	**Increment Number:**	**Date Created:**
15-H3		2023-04-07 16:47:18

	CONCRETE/MASONRY:
☐	5. Testing of reinforcing bars is not required for items given in CBC Section 1910A.2 subject to the requirements and limitations in that section.

	WELDING:
☐	1. Solid-clad and open-mesh fences, gates with maximum leaf span of 10', and gates with a maximum rolling section of 10' all having an apex height less than 8'-0" above lowest adjacent grade. When located above circulation or occupied space below, these gates/fences are not located within 1.5x gate/fence height (max 8'-0") to the edge of floor or roof.
☐	2. Handrails, guardrails, and modular or relocatable ramps associated with walking surfaces less than 30" above adjacent grade (excluding post base connections per the 'Exception' language in Section 1705A.2.1); fillet welds shall not be ground flush.
☐	3. Non-structural interior cold-formed steel framing spanning less than 15'-0", such as in interior partitions, interior soffits, etc. supporting only self weight and light-weight finishes or adhered tile, masonry, stone, or terra cotta veneer no more than 5/8" thickness and apex less than 20'-0" in height and not over an exit way. Maximum tributary load to a member shall not exceed the equivalent of that occurring from a 10'x10' opening in a 15' tall wall for a header or king stud.
☐	4. Manufactured support frames and curbs using hot rolled or cold-formed steel (i.e., light gauge) for mechanical, electrical, or plumbing equipment weighing less than 2000# (equipment only) (connections of such frames to superstructure elements using welding will require special inspection as noted in selected item(s) for Sections S/A3, S/A4 and/or S/A5 of listing above).
☐	5. Manufactured components (e.g., Tolco, B-Line, Afcon, etc.) for mechanical, electrical, or plumbing hanger support and bracing (connections of such components to superstructure elements using welding will require special inspection as noted in selected item(s) for Sections S/A3, S/A4 and/or S/A5 of listing above).
☐	6. TV Brackets, projector mounts with a valid listing (see DSA IR A-5) and recreational equipment (e.g., playground structures, basketball backstops, etc.) (connections of such elements to superstructure elements using welding will require special inspection as noted in selected item(s) for sections S/A3, S/A4 and/or S/A5 located in the Steel/Aluminum category).
☐	7. Any support for exempt non-structural components given in CBC Section 1617A.1.18 (which replaces ASCE 7-16, Section 13.1.4) meeting the following: A) when supported on a floor/roof, <400# and resulting composite center of mass (including component's center of mass) ≤4' above supporting floor/roof, B) when hung from a wall or roof/floor, <20# for discrete units or <5 plf for distributed systems.

DSA 103-19: LISTING OF STRUCTURAL TESTS & SPECIAL INSPECTIONS(SIGNATURE), 2019 CBC

Application Number: 03-122664	**School Name:** Highland High Shcool	**School District:** Kern High School District
DSA File Number: 15-H3	**Increment Number:**	**Date Created:** 2023-04-07 16:47:18

Name of Architect or Engineer in general responsible charge:

Name of Structural Engineer (When structural design has been delegated):

YOUNG NAM

Signature of Architect or Structural Engineer:

Date: 4/7/2023

Note: To facilitate DSA electronic mark-ups and identification stamp application, DSA recommends against using secured electronic or digital signatures.

DSA STAMP

IDENTIFICATION STAMP
DIV. OF THE STATE ARCHITECT
APP: 03-122664 INC:
REVIEWED FOR
SS ☑ FLS ☑ ACS ☑
DATE: 05/12/2023

DSA 103-19: LIST OF REQUIRED VERIFIED REPORTS, CBC 2019

Application Number:	School Name:	School District:
03-122664	Highland High Shcool	Kern High School District
DSA File Number:	**Increment Number:**	**Date Created:**
15-H3		2023-04-07 16:47:18

1. Soils Testing and Inspection: Geotechnical Verified Report Form DSA 293
2. Structural Testing and Inspection: Laboratory Verified Report Form DSA 291
3. Concrete Batch Plant Inspection: Laboratory Verified Report Form DSA 291
4. Prestressed / Post-Tensioned Concrete Inspection: Laboratory Verified Report Form DSA 291, or, for independently contracting SI, Special Inspection Verified Report Form DSA 292
5. Shotcrete Inspection: Laboratory Verified Report Form DSA 291, or, for independently contracting SI, Special Inspection Verified Report Form DSA 292
6. Post-installed Anchors: Laboratory Verified Report Form DSA 291, or, for independently contracting SI, Special Inspection Verified Report Form DSA 292
7. Masonry Inspection: Laboratory Verified Report Form DSA 291, or, for independently contracting SI, Special Inspection Verified Report Form DSA 292
8. Shop Welding Inspection: Laboratory Verified Report Form DSA 291, or, for independently contracting SI, Special Inspection Verified Report Form DSA 292
9. Field Welding Inspection: Laboratory Verified Report Form DSA 291, or, for independently contracting SI, Special Inspection Verified Report Form DSA 292

Soils Engineering Inc.

October 10, 2022 SEI File No. 22-18353

Jenny Hannah Brown
Director of Facilities
Kern High School District
801 South Mount Vernon Avenue
Bakersfield, CA 93307

Subject: **Response to CGS Comments**
Engineering Geology and Seismology Review for
Highland High School – Swimming Pool and Aquatics Facility
2900 Royal Scots Way, Bakersfield, CA 93306
CGS Application No. 03-CGS5552

References: (1) **Soils Engineering, Inc.; Geotechnical Investigation for New Highland High School Swimming Pool, 2900 Royal Scots Way, Bakersfield, Kern County, CA:** File No. 22-18353, dated August 5, 2022

The following is a response to the California Geological Survey (CGS) Engineering Geology and Seismology Review for the Highland High School – Swimming Pool and Aquatics Facility dated October 5, 2022. It includes CGS Comments and SEI's Responses to each comment.

CGS Comments in Need of a Response:

Project Location

1. Site Location Map, Street Address, County Name: **Additional information is requested. Please provide a site location map that illustrates the setting of the subject property and the proposed project within the property.**

❖ **SEI Response:**
SEI has prepared a complete Geological Hazard Study dated October 10, 2022, that now includes a Site Location Map (Plate 1) and a Plot Plan (Plate 2) showing site features and the project area.

Engineering Geology/Site Characterization

4. Regional Geology and Regional Fault Maps: **Additional information is requested.** The consultants provide a regional fault map but not a regional geology map. **Please provide a map that illustrates the regional geology and the location of the subject property.**

❖ **SEI Response:**
SEI has prepared a complete Geological Hazard Study dated October 10, 2022, that includes a Regional Geology Map and the location of the project area. See Plate 2A in the attached Geological Hazard Study.

Seismology & Calculation of Earthquake Ground Motion

12. Evaluation of Historic Seismicity: **Additional information is requested. Please provide a discussion of the regional historic seismicity, and any historic ground failures in the site vicinity.**

❖ **SEI Response:**
SEI has prepared a complete Geological Hazard Study dated October 10, 2022, that includes a discussion of the regional historic seismicity and any historic ground failures near the project area. See Sections 3.1, 3.2, 3.5 and 3.6 in the attached Geological Hazard Study.

Fault Rupture Hazard Evaluation

18. Active Faulting & Coseismic Deformation Across Site: **Additional information is requested.** The consultants note that the site is not in an Alquist-Priolo (earthquake fault) Special Study Zone, and they present of a list of active faults in the region based on distance from the site. However, **they do not evaluate specifically the potential for active faulting and potential surface rupture on the site itself**. A Certified Engineering Geologist should provide an evaluation of the potential for active faulting to impact the site.

❖ **SEI Response:**
SEI has prepared a complete Geological Hazard Study dated October 10, 2022, that includes a discussion of the potential for active faulting and the potential for surface rupture at the project area. See Section 3.6 in the attached Geological Hazard Study.

Slope Stability Analysis

23. Geologic Setting for Occurrence of Landslides: **Additional information is requested. Please evaluate the potential impact to the site posed by landslides.**

❖ **SEI Response:**
SEI has prepared a complete Geological Hazard Study dated October 10, 2022, that includes a discussion of the potential for landslides at the project area. See Section 3.9 in the attached Geological Hazard Study.

Other Geologic Hazards or Adverse Site Conditions

31. Conditional Geologic Assessment: **Additional information is requested. Please review**

the list of potential concerns that are presented under this item in CGS Note 48. As appropriate, discuss and evaluate specific listed concerns, such as C. Flooding.

❖ **SEI Response:**

SEI has prepared a complete Geological Hazard Study dated October 10, 2022, that includes a discussion of the potential for flooding and other potential concerns at the project area. See Section 3.7 in the attached Geological Hazard Study.

Report Documentation

33. Certified Engineering Geologist: **Additional information is requested. No CEG has signed the reviewed report. A CEG should provide any updates considered necessary as required by 2019 CBC, Section 1803A.6.**

❖ **SEI Response:**

SEI has prepared a complete Geological Hazard Study dated October 10, 2022, that includes a review, updates and a signature from a CEG. See the attached Geological Hazard Study.

We hope this provides the information you require. Please contact us if you need further clarification or have any additional questions.

Respectfully submitted,
Soils Engineering, Inc.

L Thomas Bayne
CE 26106 GE 125

Robert J. Becker
PG 5076, CEG 2238





Attachments: Geological Hazard Study for Highland High School

GEOLOGICAL HAZARD STUDY

For:

NEW SWIMMING POOL & AQUATICS CENTER
Highland High School
2900 Royal Scots Way
in
Bakersfield, CA

Prepared For:

Kern High School District
801 S. Mt. Vernon Ave.
Bakersfield, CA 93307
Attn: Ms. Jenny Hannah

Prepared By:

Soils Engineering, Inc.
4400 Yeager Way
Bakersfield, CA 93313

File No. 22-18353

October 2022

4400 YEAGER WAY
Bakersfield, CA 93313-2019
Phone: 661-831-5100
Fax: 661-831-2111
info@soilsengineering.com
www.soilsengineering.com

Soils Engineering Inc.

October 10, 2022 File No. 22-18353

Jenny Hannah Brown
Director of Facilities
Kern High School District
801 South Mount Vernon Avenue
Bakersfield, CA 93307

Subject: Geological Hazard Study
New Swimming Pool & Aquatics Center
Highland High School
2900 Royal Scots Way
Bakersfield, California

Ms. Brown:

In accordance with your request and authorization, Soils Engineering, Inc. (SEI) has performed a Geological Hazards Study for the above described subject property in Bakersfield, California (site). This study was conducted in compliance with the California Code of Regulations, Title 24, Chapters 16, 18 and 33 of the 2019 California Building Code and the California Department of Education.

Our Geological Hazards Assessment indicates that there is a low to moderate probability for liquefaction to occur during a major earthquake at the site and that the maximum peak ground acceleration at the site would be 0.293g for a 6.3 magnitude earthquake on the Kern Front Fault approximately 10.2 kilometers away. The computer-modeling program Eqsearchwin estimated that a ground motion of 0.304g occurred at the site from a 6.1 magnitude earthquake (aftershock) on the White Wolf Fault on July 23, 1952. The proposed structures should be built to withstand this magnitude of an earthquake and ground motions.

The site-specific design acceleration values to be utilized for the proposed improvements should be 0.692g for short periods (S_{Ds}) and 0.432g for the 1 second period (S_{D1}). The seismic design category is a D for both short and 1-second periods per the 2019 CBC.

In the event of a major earthquake, there is a very low potential for rock falls or landslides to impact the site. The site is located outside of the potential flood zone of an upstream disaster (dam failure). The estimated amount of total dynamic settlement that would occur at this site during a major earthquake is approximately 0.13” and the differential settlement is 0.064” utilizing a conservative depth to groundwater of 100’. These estimated settlements appear to be appropriate for a school site with no mitigation required.

4400 YEAGER WAY
Bakersfield, CA 93313-2019
Phone: 661-831-5100
Fax: 661-831-2111
info@soilsengineering.com
www.soilsengineering.com

No high-pressure natural gas pipelines or active high-pressure petroleum pipelines appear to be present within 1500' of the site that would be a threat to the site.

The nearest oil wells (dry holes) ever drilled are far enough away from the site that it is not likely that any significant subsurface oilfield related gases (hydrogen sulfide, methane etc.) are present beneath the site.

No further geological assessment or mitigation is recommended.

The accompanying report is an instrument of service of ***Soils Engineering, Inc.*** The report summarizes our findings and relates our opinions with respect to the potential for geological hazards to affect the site. Note that our findings and opinions are based on information that we obtained on given dates, through records review, site review, and related activities. It is possible that other information exists or subsequently has become known, just as it is possible for conditions we observed to have changed after our observation.

Soils Engineering, Inc. will be pleased to provide more information in this regard. Please call us for assistance at (661) 831-5100.

Sincerely,
SOILS ENGINEERING, INC.

CERTIFIED ENGINEERING GEOLOGIST
ROBERT J. BECKER
No. 2238
Exp. Date 2/28/23
STATE OF CALIFORNIA

REGISTERED PROFESSIONAL ENGINEER
LOUIS THOMAS BAYNE
No. 000125
GEOTECHNICAL
STATE OF CALIFORNIA

Robert J. Becker, P.G. 5076, C.E.G. 2238
Expires 2/28/23

L. Thomas Bayne, GE 000125

Table of Contents

Geological Hazards Study

Introduction..... 1

Geology & Hydrology.....1
- Geologic Setting.....1
- Surface Lithology.....2
- Hydrology.....2

Seismic & Fault Hazards.....2
- Seismic History.....2
- Seismic Evaluation.....3
- Seismic Design Values.....4
- Seismology & Calculation of Earthquake Ground Motion.....5
- Possible Earthquake Effects.....5
- Potential For Ground Rupture, Ground Shaking, Ground Failure.....6
- Potential For Earthquake Induced Flooding.....6
- Liquefaction Potential.....6
- Slope Stability.....7
- Settlement.....7
- Expansive Soil & Hydrocollapse Potential.....7

High-Pressure Pipelines & Hazardous Materials.....7
- High-Pressure Pipeline.....7
- Hazardous Materials.....8

Conclusions & Recommendations.....8

Attachments.....8

References.....9

ATTACHMENTS

I. LIST OF ILLUSTRATIONS

Plate 1 - Site Location
Plate 2 - Plot Plan
Plate 2A- Geologic Map & Boring Locations
Plate 2B - Geologic Cross-Section A to A'
Plate 3 - Seismic Atlas Map – Oil Center Quad
Plate 3A- Earthquake Epicenter Map
Plate 4 - Depth To Water Map
Plate 5 - California Fault Map
Plate 5A- Regional Faults From 2010 Fault Activity Map of California
Plate 6- CalGEM Oil Well Map
Plate 7- Regional Land Subsidence Map

Attachment A: Deterministic Site Parameters - EQFAULTWIN data, EQSEARCHWIN data, USGS Seismic Design Report SEAOC/OSHPD. USGS Uniform Hazard Tool results.

Attachment B - Boring Logs, Lake Isabella Flood Inundation Map, Flood Insurance Rate Map, Historical Depth to Water Map, LiquefyPro Plots and Calculation Sheets for Liquefaction and Settlement. Pipeline Survey Letter, and Lab Results Table

GEOLOGICAL HAZARD STUDY
For
Kern High School District
Highland High School

New Highland High School Swimming Pool
2900 Royal Scots Way
in

Bakersfield, California
October 2022

1.0 Introduction

Soils Engineering, Inc. (SEI) has conducted a Geological Hazards Study for Highland High School, located at 2900 Royal Scots Way (site) in Bakersfield, California (see Location Map, Plate 1). The site location coordinates are approximately 35.400316º north, latitude, and -118.935099º west, longitude. The following is an Executive Summary of the investigation conducted in October 2022.

A site reconnaissance, which consisted of walking the property and evaluating the surrounding geological features, was conducted by SEI personnel in August 2022. The proposed New Highland High School Swimming Pool project sits within the school campus. Currently, the school site consists of multiple school buildings, paved parking areas with solar panels, multiple sport fields with bleachers, multiple sport courts, asphalt and concrete surfaces, and landscaped areas. Site borders include residential properties to the north and south, apartment complexes to the east, commercial properties to the southeast, and Chipman Junior High School and Henry Eissler Elementary School to the west.

2.0 Geology and Hydrology

2.1 Geologic Setting

The site has generally flat relief with a slight slope to the southwest. The project site rests on Pliocene-Pleistocene nonmarine sedimentary rocks (QPc) within the southern portion of the San Joaquin Valley. See the attached Geologic Map (Plate 2A), as interpreted from on-site soil borings and the Bakersfield Sheet of the Geologic Map of California (Smith, Department of Conservation Division of Mines and Geology (CDMG), 1964) and the 2010 Geologic Map of California (CDMG). Active faults within 50 miles include the Kern Front Fault, approximately 10.2 kilometers to the northwest; the White Wolf Fault, approximately 26.9 kilometers to the southeast; the Pleito Thrust Fault, approximately 45.0 kilometers to the south, southwest; the Garlock (west) Fault, approximately 57.6 kilometers to the south, southeast; the San Andreas Fault (Whole M-1a, Carrizo M-1c-2, 1857 Rupture M-2a, Cho-Moj M-1b-1), approximately 63.6 kilometers to the west; the Big Pine Fault, approximately 64.8 kilometers to the southwest; and the San Gabriel, approximately 76.6 kilometers to the

southeast. The site is not located within an Alquist-Priolo Special Study Zone (Earthquake Fault Zone), and the Seismic Hazard Atlas map of the Oil Center Quadrangle show the local faults near the site (Plate 3). Nearby active faults are shown on the 2010 Fault Activity Map of California (CDMG, 2010) within the general area of the site (Plate 5A) and on the EQFault California Fault Map (Plate 5).

Near surface soils within the zone of influence of future developments consist of interbedded clayey sands, sandy clay, and poorly graded sand layers overlying bedrock, which is located several thousand feet below the surface. These sediments were derived in the Sierra Nevada Mountains to the east of the site and deposited by local drainage and the meandering Kern River.

2.2 Surface Lithology

Earth materials identified in the ten (10) onsite soil borings (B-1 to B-10) conducted between March 30, 2022 through April 11, 2022, consisted generally of a yellow brown to reddish brown, damp, low plasticity Sandy Clay in the top 8' to 20'. A yellowish brown, dry, fine grained Poorly Graded Sand or a Clayey Sand was encountered below the Sandy Clay with some gravel and cobbles present. Rock and cobbles were encountered as shallow as 4' in some of the borings with refusal occurring in some of the borings as shallow as 14'. These soils are classified as CL, SP, and SC, respectively in the unified Soil Classification System (USCS). See attached boring logs included in Appendix B for more detail along with Plate 2B showing a cross-section A to A' between B-1, B-3, and B-10 borings.

2.3 Hydrology

Unconfined Aquifer - The depth to the unconfined aquifer as shown on maps prepared by the Department of Water Resources (DWR) and presented on the SGMA Data Viewer and dated Spring 2021 and Spring 2020, is approximately 221' and 202' respectively below the ground surface. Historical depth to water data indicates that the shallowest depth to water within a mile is approximately 120' in the Spring of 2019 as shown in the data SGMA data viewer within one mile of the site borders. See Plate 4 for a depth to water map utilizing SGMA data and Appendix B for a DWR Historic Depth To Water Map.

Perched Water, Ground Water or Seepage – No shallow ground water nearby the site is shown on historical Kern County Water Agency groundwater maps going back to 1982. The nearest shallow water is over 1-mile to the south. No shallow groundwater is shown on the Seismic Hazard Atlas Map within 1 mile of the site area.

3.0 Seismic and Fault Hazards

3.1 Seismic History

There have been a number of historic earthquakes that may have affected the Bakersfield area. The following is a short summary of the major known events:

- 1/9/1857 - Fort Tejon Earthquake - San Andreas Fault, Estimated Magnitude 8.0+,

© 2022 SOILS ENGINEERING, INC.

30 feet of slippage over a 200 mile area, widespread damage.

- 7/21/1952 - Arvin/Tehachapi - White Wolf Fault, Magnitude 7.7, extensive damage to buildings and highways.

- 8/22/1952 - Bakersfield Quake (Aftershock of Arvin/Tehachapi) - 8 miles ESE of Bakersfield, Magnitude 5.8. Closest aftershock to Bakersfield causing extensive damage to already weakened buildings. Multiple surface fissures were created from the 1952 earthquakes.

SEI utilized the software program EQSEARCHWIN version 3.0 (Thomas F. Blake) to evaluate historical earthquakes in the area of the site over the last 200 years. The Earthquake Epicenter Map (Plate 3A) shows earthquake magnitudes and the epicentral distance from the site. The majority of the seismic activity in the area of the site has been along the White Wolf Fault and the San Andreas Fault. The closest earthquake of at least 5.0 magnitude to the site was 7.7 kilometers away, at a magnitude of 5.8 in August 1952. The largest magnitude earthquake within 100 miles was 7.9 on the San Andreas Fault in 1857. The largest estimated site acceleration is 0.304 g from a 6.1 magnitude earthquake (likely aftershock) on the White Wolf Fault in 1952. The EQSEARCHWIN estimation of Peak Acceleration from California Earthquake Catalogs Table, Earthquake Recurrence Curve, Earthquake Epicenter Map and a graph of the Number of Earthquakes (N) above Magnitude (M) are presented in Appendix A.

3.2 Seismic Evaluation

The site is located within the Oil Center Quadrangle in the southeastern 1/4 of Section 14, Township 29 South, Range 28 East and is not located in an Alquist-Priolo special studies zone (California Fault Zone). Local faults and general geology are shown on the Lamont Quadrangle, Seismic Hazard Atlas Maps prepared for the Kern County Council of Governments (Plate 3).

The nearest active fault, as indicated by the computer-modeling program EQFault version 3.0, is the Kern Front Fault, which is approximately 10.2 km to the northwest. The White Wolf Fault is approximately 26.9 kilometers to the south, southeast of the site. The Pleito Thrust is located approximately 45.0 kilometers south, southwest of the site. The Garlock Fault (west) is approximately 57.6 kilometers south, southeast of the site, and the San Andreas Fault (Whole M-la, Carrizo M-1c-2, 1857 Rupture M-2a, and Cho-Moj) is approximately 63.6 kilometers to the west. The Big Pine Fault is approximately 64.8 kilometers to the southwest and the San Gabriel Fault is approximately 76.6 kilometers to the southeast. Regional faults in relation to the site location are presented on Plate 5A and are from the 2010 Fault Activity Map of California (CDMG, 2010). The 2010 Fault Activity Map of California does show two (2) Quaternary age faults near the site area of unknown age as shown on Plate 5A.

© 2022 SOILS ENGINEERING, INC.

3.3 Seismic Design

The seismic design values are presented in the table below based on the new 2019 California Building Code (CBC). The Site Class for the proposed improvements located at 2900 Royal Scots Way in Bakersfield, Kern County, CA, were determined using standard penetration test data obtained at the site and are provided in the attached Boring Logs.

SEISMIC DESIGN CRITERIA		VALUE	SOURCE
Risk Category		III	2019 CBC Table 1604.5 or 1604*A*.5
Site Class		D	2019 CBC § 1613.2.2 or 1613*A*.2.2; ASCE 7-16 Table. 20.3-1; Site Specific Soils Report
Mapped MCE_R Spectral Response Acceleration, short period	S_S	0.916g	SEAOC-OSHPD software; 2019 CBC Figure 1613.2.1(1)
Mapped MCE_R Spectral Response Acceleration, at 1-sec. Period	S_1	0.329g	SEAOC-OSHPD software; 2019 CBC Figure 1613.2.1(2)
Site Coefficient	F_a	1.133	SEAOC- OSHPD software; 2019 CBC Table 1613.2.3(1) or 1613*A*.2.3(1)
Site Coefficient	F_v*	1.97*	2019 CBC Table 1613.2.3(2) or 1613*A*.2.3(2)
Adjusted MCE_R Spectral Response Acceleration, short period, $F_a * S_s$	S_{MS}	1.039g	SEAOC- OSHPD software; 2019 CBC § 1613.2.3 or 1613*A*.2.3
Adjusted MCE_R Spectral Response Acceleration, 1-sec. period, $F_v * S_1$	S_{M1}*	0.648*	2019 CBC § 1613.2.3 or 1613*A*.2.3
Design Spectral Response Acceleration, short period, 2/3 * S_{MS}	S_{DS}	0.692g	SEAOC- OSHPD software; 2019 CBC § 1613.2.4 or 1613*A*.2.4
Design Spectral Response Acceleration, 1-sec. period, 2/3 * S_{MI}	S_{D1}*	0.432*	2019 CBC § 1613.2.4 or 1613*A*.2.4
Peak Ground Acceleration for Max. Considered Earthquake (MCE_G)	PGA	0.396g	SEAOC- OSHPD software; ASCE 7-16 Fig 22-9
Site Coefficient, F_{PGA} = 1.204, F_{PGA}* PGA	PGA_M	0.477g	SEAOC- OSHPD software; ASCE 7-16 § 11.8.3.2
Mapped Risk Coefficient at 0.2 second Spectral Response Period	C_{RS}	0.925	SEAOC- OSHPD software; ASCE 7-16 Figure 22-18A
Mapped Risk Coefficient at 1 second Spectral Response Period	C_{R1}	0.922	SEAOC- OSHPD software; ASCE 7-16 Figure 22-19A
Seismic Design Category, short period		D	2019 CBC § 1613.2.5
Seismic Design Category, 1second period *		D*	2019 CBC § 1613.2.5

** The project Structural Engineer shall confirm that a ground motion hazard analysis is not required in accordance with ASCE 7-16 § 11.4.8-Exception 2. The values tabulated above for S_{M1}, S_{D1}, and the Seismic Design Category/1-second period are based on the site coefficient, F_v, interpolated from 2019 CBC Table 1613.2.3(2) or 1613A.2.3(2). The use of that table is predicated on the above referenced Exception 2 being applicable for the site and the structure(s). The project Structural Engineer or designer shall confirm that the above referenced Exception 2 is applicable. Where the above referenced Exception 2 does not apply, the values for F_v, S_{M1}, S_{D1}, and for the Seismic Design Category/1-second period may not be applicable for the site and structure(s).*

MCE_R = Maximum Considered Earthquake (risk targeted)
MCE_G = Maximum Considered Earthquake (geometric mean)

© 2022 SOILS ENGINEERING, INC.

See attached SEAOC/OSHPD seismic design data in Appendix A.

3.4 Seismology & Calculation of Earthquake Ground Motion

The site is not located within or directly adjacent to a mapped Alquist-Priolo (AP) Earthquake Zone and is not a Seismic Design Category E or F. The site qualifies for the Site-Specific Ground Motion Hazard Analysis exemption under Section 11.4.8 of ASCE 7-16. The above seismic design information in Section 3.3 will be utilized for this project.

3.5 Possible Earthquake Effects

A number of active faults are located within a 50-mile radius of the subject site. To evaluate the affect a major earthquake might have on the site, the computer modeling programs EQFaultwin vers. 3.0 (Thomas Blake) were utilized. Site-specific parameters were inputted and the programs computed the maximum peak site ground accelerations resulting from an earthquake. Because ground accelerations are based largely on fault distance and magnitude, we have focused our analysis on those faults which are close to the site, or that have large maximum credible magnitudes, or a combination of the two. The result of this analysis is presented below in Table A.

TABLE A

FAULT	Approximate Distance (Km)	Maximum Earthquake Magnitude (Mw)	Maximum Peak Ground Acceleration	Estimated Site Intensity (MM)
Kern Front	**10.2**	6.3	**0.293**	**IX**
White Wolf	26.9	7.3	0.254	**IX**
Pleito Thrust	45.0	7.0	0.147	VIII
Garlock (West)	57.6	7.3	0.117	VII
San Andreas (1857 Rupture, Whole M-1a, Carrizo) M-1c-2, Cho-Moj M-1b-1	63.6	7.3 to **8.0**	0.114 to 0.157	VII to VIII
Big Pine	64.8	6.9	0.086	VII
San Gabriel	76.6	7.2	0.089	VII

This analysis estimates that a maximum peak ground acceleration of 0.293g would be felt at

© 2022 SOILS ENGINEERING, INC.

the site as a result of a maximum earthquake of magnitude 6.3 on the Kern Front Fault approximately 10.2 kilometers away. See attached Deterministic Site Parameters for a full listing of computed values for faults within a 100-mile radius of the site in Appendix A. Also attached is a California Fault Map showing nearby faults in relationship to the site (Plate 5).

Utilizing the USGS Deaggregation program the Probabilistic Seismic Hazard Deaggregation for the Site was calculated to be 0.5165g for a 2% chance every 50 years of exceedance. See Appendix A for this calculation results page.

3.6 Potential For Ground Rupture, Ground Shaking, Ground Failure

Ground rupture may occur along a fault trace in a major earthquake. It is unlikely that ground rupture could occur at this site since it is not located within 500 feet of a suspected active fault. Some ground shaking is likely at this site in the event of a major earthquake on one of the nearby faults. Based on the predicted maximum horizontal accelerations at the site and the soil types identified in this investigation ground failure is highly unlikely at this site.

3.7 Potential for Earthquake-Induced Flooding and Flood Zone

The potential for earthquake-induced flooding at the site appears to be low since groundwater has been historically over 120' below the ground surface. The site is located within flood Zone X with minimal potential flooding according to the Flood Insurance Rate Map covering the site area (see Appendix B for map). The Lake Isabella Dam Flood Plain & Dam Inundation Area Map for the Bakersfield Area indicates the site is outside of the flood area (see Appendix B for map).

Repair and improvement to the Lake Isabella Dam by the Army Corps of Engineers is under construction that started in 2018 to further lessen the potential for a major dam release. The amount of water that is stored in the lake is also restricted until these repairs are complete. Based on the Dam Inundation Maps, the site is outside of the potential flood area. See attached Dam Inundation Maps in Attachment B.

3.8 Liquefaction Potential

Groundwater was not encountered in any of the geotechnical soil borings to the a total depth explored of 51.5' bgs. Historical depth to water data by the DWR and presented on the SGMA data viewer in the Spring of 2019 was 145' within a mile radius of the site borders. In addition, no perched or shallow ground water has been indicated near this area from 1982 to 2012. The lithology encountered in the subsurface include mostly of Sandy Clay, Clayey Sand and Poorly Graded Sands. SPT blowcounts in the deep SEI soil boring ranged from 8 to 64 blowcounts per foot to a depth of 51.5'. A liquefaction analysis was performed on the deep boring B-10 utilizing the program LiquefyPro (version 5.9b). Site-specific information was used in this analysis including; SPT blowcounts per foot, grain-size analysis, dry weight densities, the moment magnitude earthquake and the PGA for the MCEg earthquake motion (0.477g) and a conservative depth to water of 100'. The overall liquefaction potential at this

© 2022 SOILS ENGINEERING, INC.

site appears to be minimal at boring B-10. See attached LiquefyPro data in Appendix B and boring logs for more detail.

3.9 *Slope Stability*

The site is located in an area with <0.5 percent slopes across the site. No bedrock outcrops are present within 1/2 mile of the site. No evidence of historic landslides or creep was observed in this area. There is a very low potential for rockfalls or landslides to impact the site in the event of a major earthquake. Overall the site appears to be stable

3.10 *Settlement*

The estimated amount of dynamic settlement that would occur at this site during a major earthquake is approximately 0.13" based on the lithology encountered, the SPT blowcounts recorded during sampling and the settlement analysis conducted on boring B-10 utilizing the program LiquefyPro. The estimated amount of differential settlement is 0.64" according to the program LiquefyPro. See attached Liquefaction Analysis Calculation Sheets and graphs in Appendix B for more detail.

3.11 Expansive Soil and Hydrocollapse Potential

Based on the lithology encountered in the top 10 feet in the soil borings it appears unlikely that highly expansive surface soils will be present at this site. An Expansive Index test on sample B-1 @ 0-5' was 17 which indicates a low expansion potential. A consolidation test on sample B1 @ 6' at the site had a low result of -0.2%. See Lab Result Table in Appendix B for more detail.

The City of Bakersfield Safety Element includes a discussion on land subsidence potential in the Bakersfield area. The main causes of land subsidence are Tectonic Subsidence, Oil & Gas Fluid Extraction, Groundwater Withdrawal and Hydrocompaction of Moisture Deficient Alluvial Deposits. Figure 15 in the Safety Element shows the areas of significant subsidence within the Bakersfield area. The site is located within the area where the lowest amount of historic land subsidence has occurred and outside of the area of hydrocompaction as shown on attached Plate 7. In addition, agricultural use is decreasing, and no public water wells are present nearby, so groundwater withdrawal appears to be limited. The site does not reside in or adjacent to an oil field, so oil field activities (oil withdrawal) will have no to minimal impact on the site. Based on this information it appears that regional subsidence should not be an issue at this site requiring any special mitigation or requirements.

4.0 High-Pressure Pipelines & Hazardous Materials

4.1 High-Pressure Pipelines

According to field observations and representatives of Pacific Gas & Electric, The Gas Company and the State Fire Marshal's Office, there are no high-pressure natural gas pipelines within 1500' of the site. See attached Pipeline Certification in Attachment B.

© 2022 SOILS ENGINEERING, INC.

4.2 Hazardous Materials

The site is not within an active oil or gas field. The closest oil wells ever drilled near the site appear to be approximately greater than 0.31 miles in all major directions. It is unlikely that the oilfield activities have impacted the subsurface soil or soil gas beneath subject site with chemical of concern (methane, H2S, etc.). See Plate 6 for the site location in reference to the nearest oil and gas wells.

5.0 Conclusions & Recommendations

Our Geological Hazards Assessment indicates that there is a low to moderate probability for liquefaction to occur during a major earthquake at the site and that the maximum peak ground acceleration at the site would be 0.293g for a 6.3 magnitude earthquake on the Kern Front Fault approximately 10.2 kilometers away. The computer-modeling program Eqsearchwin estimated that a ground motion of 0.304g occurred at the site from a 6.1 magnitude earthquake (aftershock) on the White Wolf Fault on July 23, 1952. The proposed structures should be built to withstand this magnitude of an earthquake and ground motions.

The site-specific design acceleration values to be utilized for the proposed improvements should be 0.692g for short periods (S_{Ds}) and 0.432g for the 1 second period (S_{D1}). The seismic design category is a D for both short and 1-second periods per the 2019 CBC.

In the event of a major earthquake, there is a very low potential for rock falls or landslides to impact the site. The site is located outside of the potential flood zone of an upstream disaster (dam failure). The estimated amount of total dynamic settlement that would occur at this site during a major earthquake is approximately 0.13” and the differential settlement is 0.064” utilizing a conservative depth to groundwater of 100’. These estimated settlements appear to be appropriate for a school site with no mitigation required beyond the Geotechnical Engineers recommendations stated in the Geotechnical Investigation.

No high-pressure natural gas pipelines or active high-pressure petroleum pipelines appear to be present within 1500’ of the site that would be a threat to the site.

The nearest oil wells (dry holes) ever drilled are far enough away from the site that it is not likely that any significant subsurface oilfield related gases (hydrogen sulfide, methane etc.) are present beneath the site.

No further geological assessment or mitigation is recommended.

5.0 Attachments

5.1 Location Map- Plate 1, "Location Map" shows the location of the site with relationship to roads and land features**.**

5.2 Plot Plan - Plate 2, "PLOT PLAN" shows the location and lot configuration of the

© 2022 SOILS ENGINEERING, INC.

property.

5.2.1 Plate 2A, Geologic Map shows the site geology related to local topography, streets and nearby surficial features.

5.2.2 Plate 2B, Geologic Cross-Section A to A', shows the subsurface lithology encountered in some of the soil borings at the site.

5.3 Seismic Hazard Atlas Map- Plate 3A, Shows local geology and faults within the Oil Center Quadrangle near the site.

5.3.1 Earthquake Epicenter Map - Plate 3, Shows the site location on an earthquake epicenter map of historical earthquakes with magnitudes >5.0, from the Eqsearchwin computer modeling program.

5.4 Depth To Groundwater Map - Plate 4, Shows the site location in relation to a Depth To Water Map of the regional area presented on the SGMA Data viewer.

5.5 Fault Location Map- Plate 5, Shows the site in relation to the nearest active faults within 100 miles based on the EQFault program.

5.5.1 Plate 5A shows the Regional Faults based on the Fault Activity Map of California 2010.

5.6 CalGEM Oil Well Map - Plate 6, Shows the site in relation to the nearest oil wells drilled near the site.

5.7 Plate 7, Regional Land Subsidence Map – Shows the site location on a Map that presents the areas of known regional subsidence and hydrocompaction in the Bakersfield area.

5.8 Appendix A - Deterministic Site Parameters - EQFAULTWIN data determined for the site for faults within 100 miles. EQSEARCHWIN data concerning the distance and magnitude of earthquakes within 100 miles of the site is attached. PSH Deaggregation plot is attached.

5.9 Appendix B - Presents the Boring Logs, the Flood Inundation Map for Lake Isabella, the Flood Insurance Rate Map, DWR Historic Depth To Water Map, LiquefyPro plots and calculation sheets for liquefaction and settlement. Pipeline Survey Letter and Lab Result Table.

6.0 References

- Water Supply Reports, Kern County Water Agency, Bakersfield, California, 1983 to 2017.
- USGS Quadrangle Map, Oil Center
- Smith, Arthur, California Division of Mines and Geology - Geologic Map of California- Bakersfield Sheet, 1964, Olaf P. Jennings Edition.
- Jennings, Charles and Bryant, William, Fault Activity Map of California, CDMG, 2010.
- U.S. Dept. of Agricultural Soil Surveys, 1942, 1945, 1946.
- EQFaultwin, ver. 3.0, Thomas F. Blake; FRISKSPWIN, ver. 4.0, Thomas F. Blake;
- USGS, Design Maps, http://geohazards.usgs.gov/designmaps/us
- EQSEARCHWIN, ver. 3.0, Thomas F. Blake
- LiquefyPro (version 5.9b), CivilTech Software.
- CalGEM, Online Mapping System.
- Blake, Thomas, Empirical Prediction of Earthquake Induced Liquefaction Potential.
- Seismic Hazard Atlas Map, Oil Center Quadrangles, Kern County

© 2022 SOILS ENGINEERING, INC.

- California Fault Parameters, 1996 Draft, California Department of Conservation, Division of Mines and Geology**.**
- N. Bolton Seed, Kotiji Tokimatsu, A.M., A.S.C.E, Evaluation of Settlement in Sands Due to Earthquake Shaking; Journal of Geotechnical Engineering A.S.C.E. Vol. 113, No. 8, August, 1987.
- URS, California Department of Education (CDE), Guidance Protocol for School Site Pipeline Risk Analysis, Volumes 1 & 2, February 2007.
- Department of Water Resources, Groundwater Data Module, web page: http://wdl.water.ca.gov/gw/admin/main_menu_gw.asp
- Department of Water Resources, SGMA Data Viewer Groundwater Levels Map

© 2022 SOILS ENGINEERING, INC.

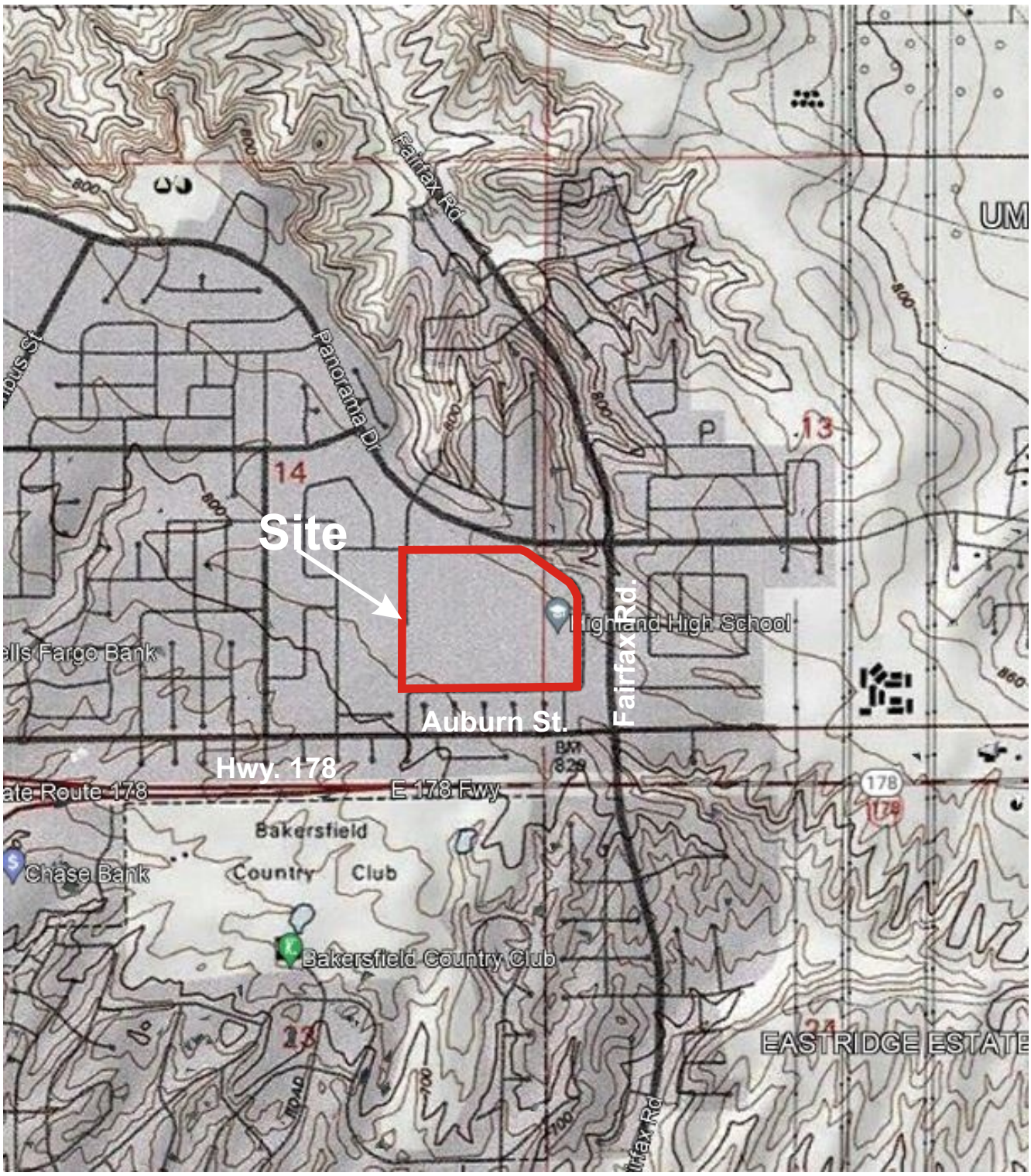

SOILS ENGINEERING, INC. **4400 Yeager Way** **Bakersfield, CA 93313** **(661) 831 - 5100** DATE: 10/22 PROJECT: #18353	**New Highland High School Swimming Pool** **2900 Royal Scots Way** **Bakersfield, CA** Location Map	**PLATE** 1



SOILS ENGINEERING, INC. **4400 Yeager Way** **Bakersfield, CA 93313** **(661) 831 - 5100** DATE: 10/22 PROJECT: #18353	**New Highland High School Swimming Pool** **2900 Royal Scots Way** **Bakersfield, CA** **Plot Plan**	**PLATE** **2**



Soil Boring Location

Cross-Section Line A- A' (see Plate 2B)

0 ft 225 ft 450 ft

Approximate Scale

QPc = Pliocene-Pleistocene Alluvium: Sandy Clay, Poorly Graded Sands, Clayey Sand

SOILS ENGINEERING, INC.
4400 Yeager Way
Bakersfield, CA 93313
(661) 831-5100

DATE: 10/22
PROJECT: #18353

New Highland High School Swimming Pool
2900 Royal Scots Way
Bakersfield, CA

BORING LOCATION/GEOLOGIC MAP

PLATE
2A

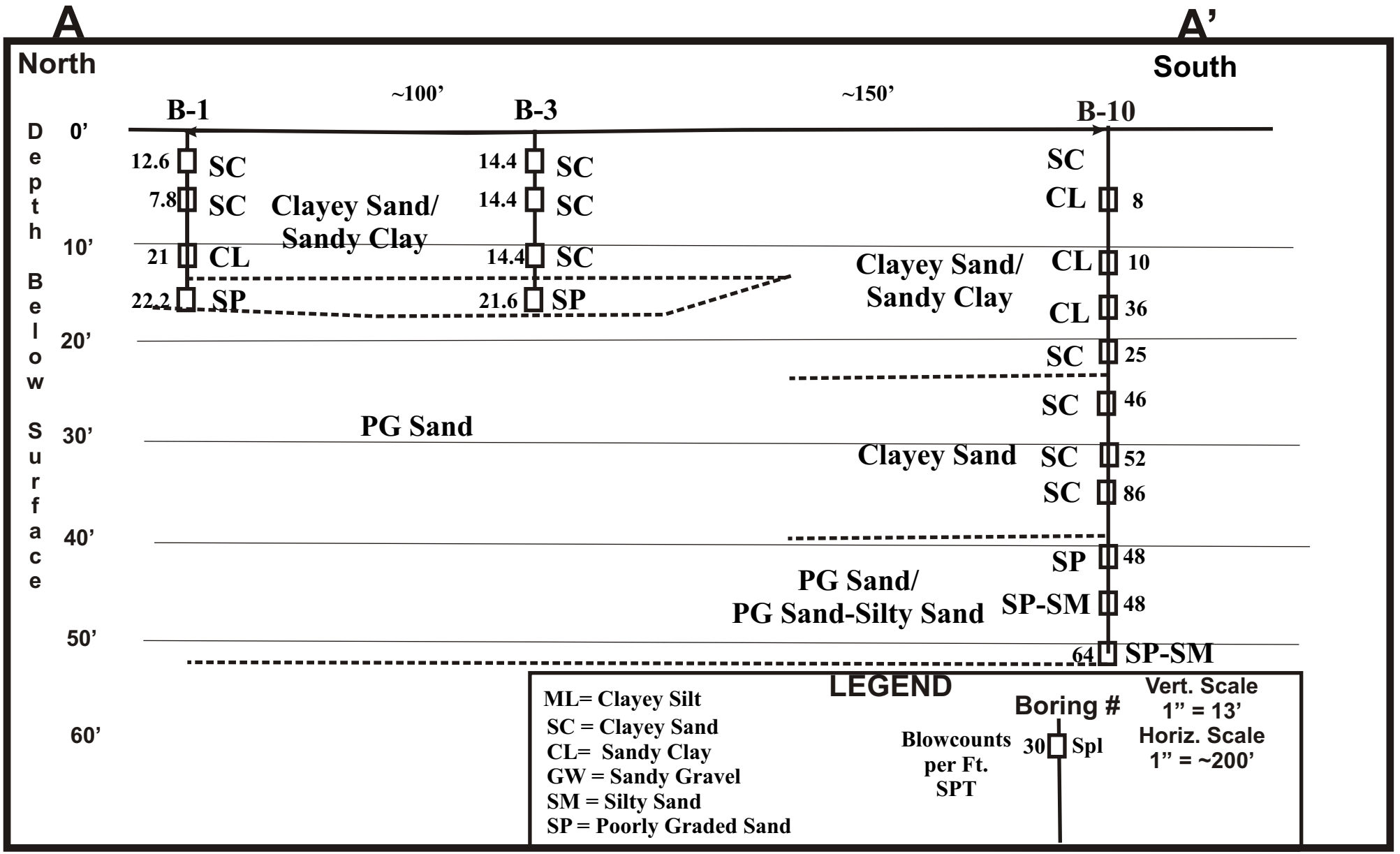

SOILS ENGINEERING, INC.
4400 Yeager Way
Bakersfield, CA 93313
(661) 831-5100

DATE: 10/22
PROJECT: #18353

New Highland High School Swimming Pool
2900 Royal Scots Way
Bakersfield, CA

Geologic Cross-section A' to A

PLATE
2B

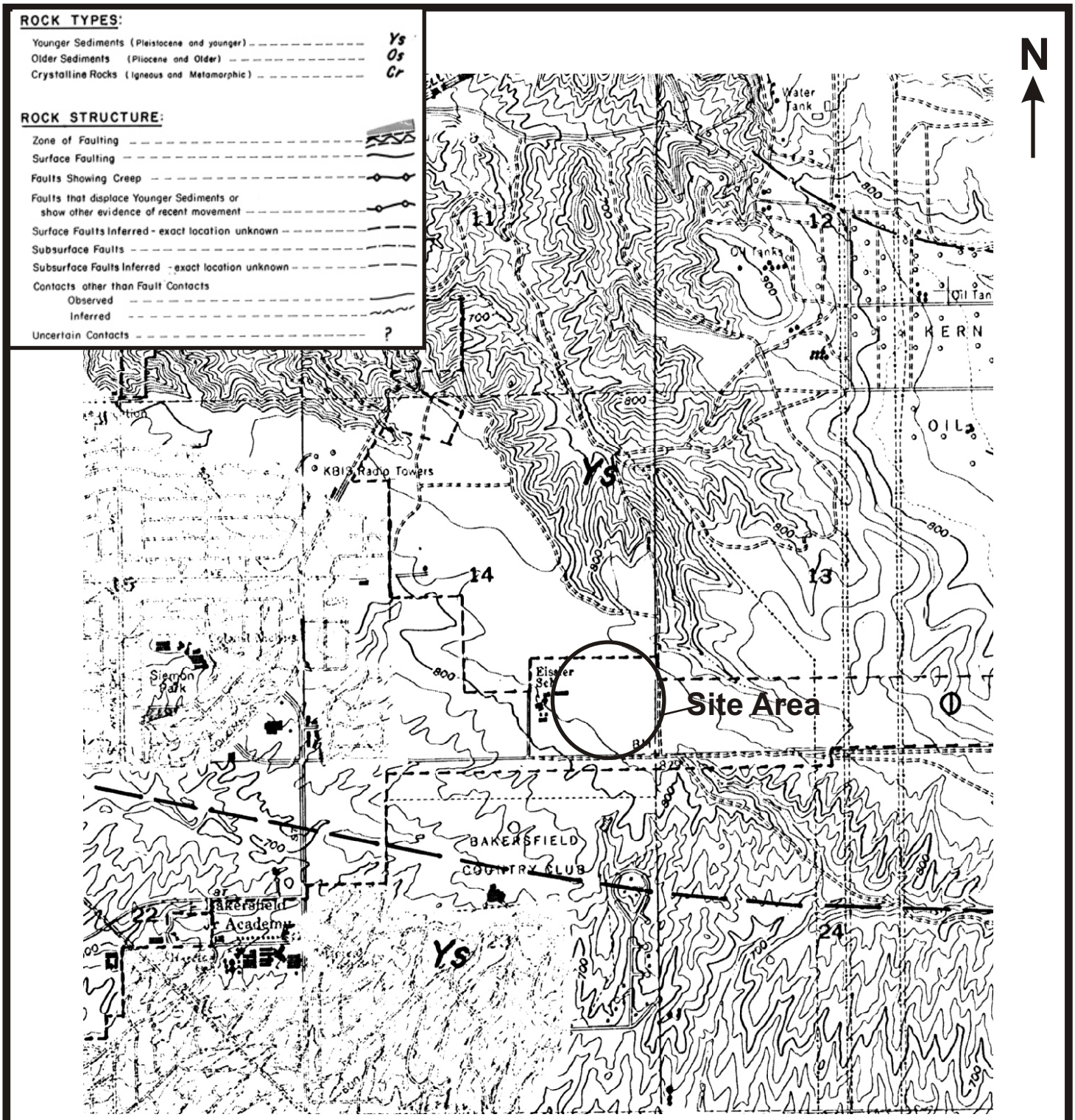

Source: Oil Cener Quadrangle, Seismic Hazard Atlas Map, Kern County Council of Govt

SOILS ENGINEERING, INC. **4400 Yeager Way** **Bakersfield, CA 93313** **(661) 831-5100** DATE: 10/22 PROJECT: #18353	**New Highland High School Swimming Pool** **2900 Royal Scots Way** **Bakersfield, CA** Seismic Hazard Zone Atlas Map	PLATE 3

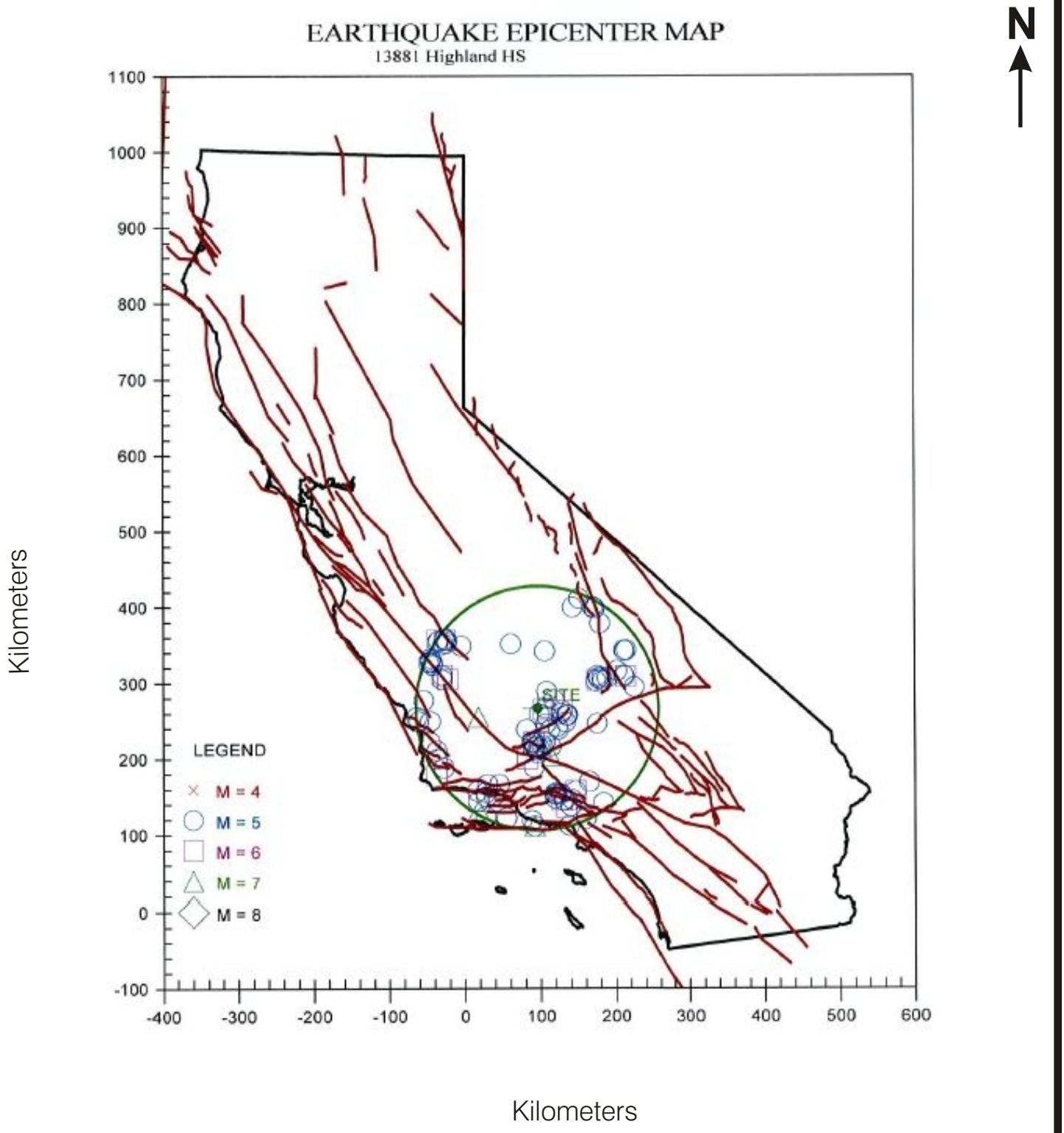

SOILS ENGINEERING, INC. **4400 Yeager Way** **Bakersfield, CA 93313** **(661) 831-5100** DATE: 10/22 PROJECT: #18353	**New Highland High School Swimming Pool** **2900 Royal Scots Way** **Bakersfield, CA** Earthquake Epicenter Map	**PLATE** **3A**

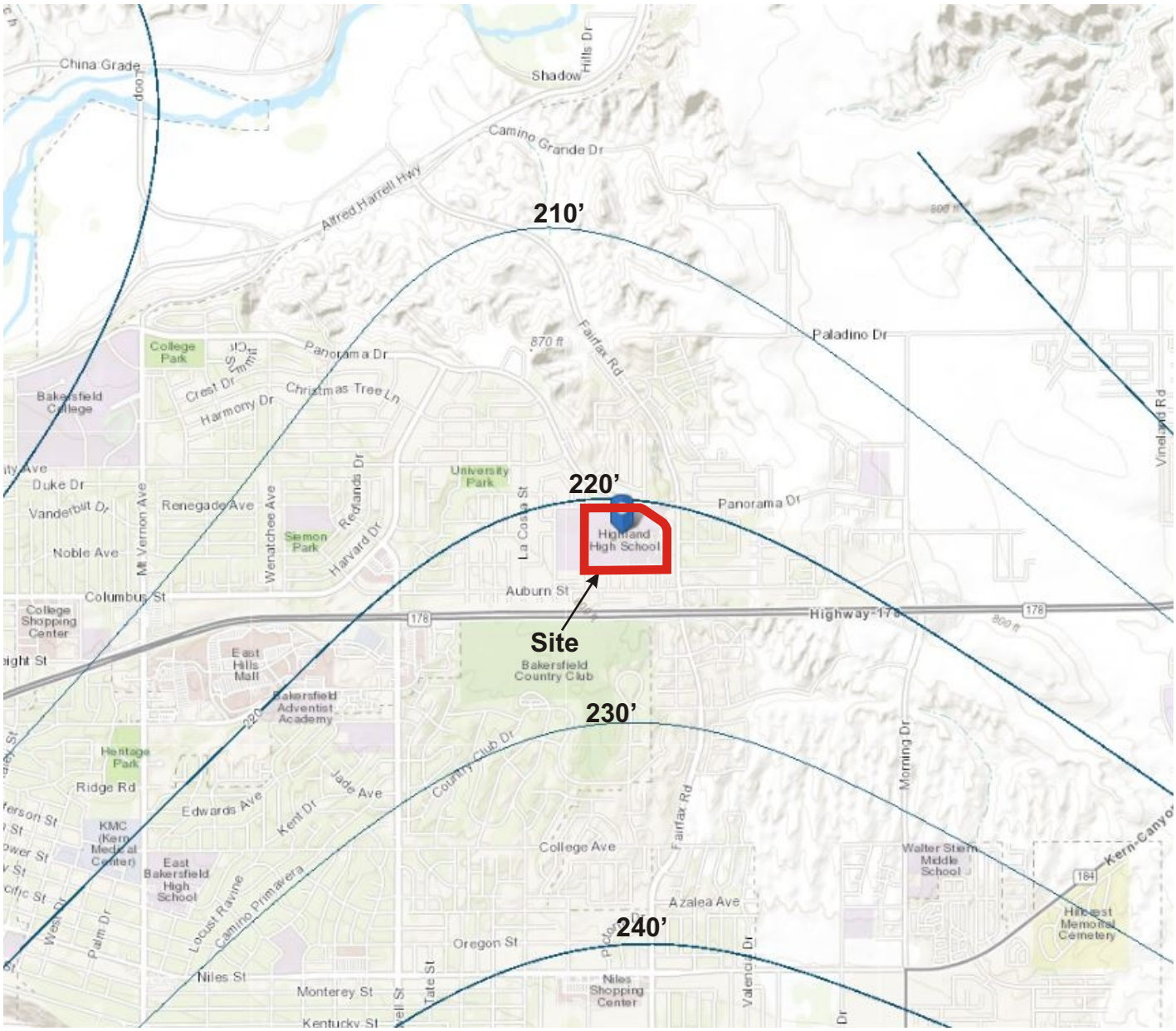

DWR, SGMA Data Viewer, Depth To Water Map,Spring 2021

SOILS ENGINEERING, INC. **4400 Yeager Way** **Bakersfield, CA 93313** **(661) 831-5100** DATE: 10/22 PROJECT: #18353	**New Highland High School Swimming Pool** **2900 Royal Scots Way** **Bakersfield, CA** Depth To Water Map	**PLATE** **4**

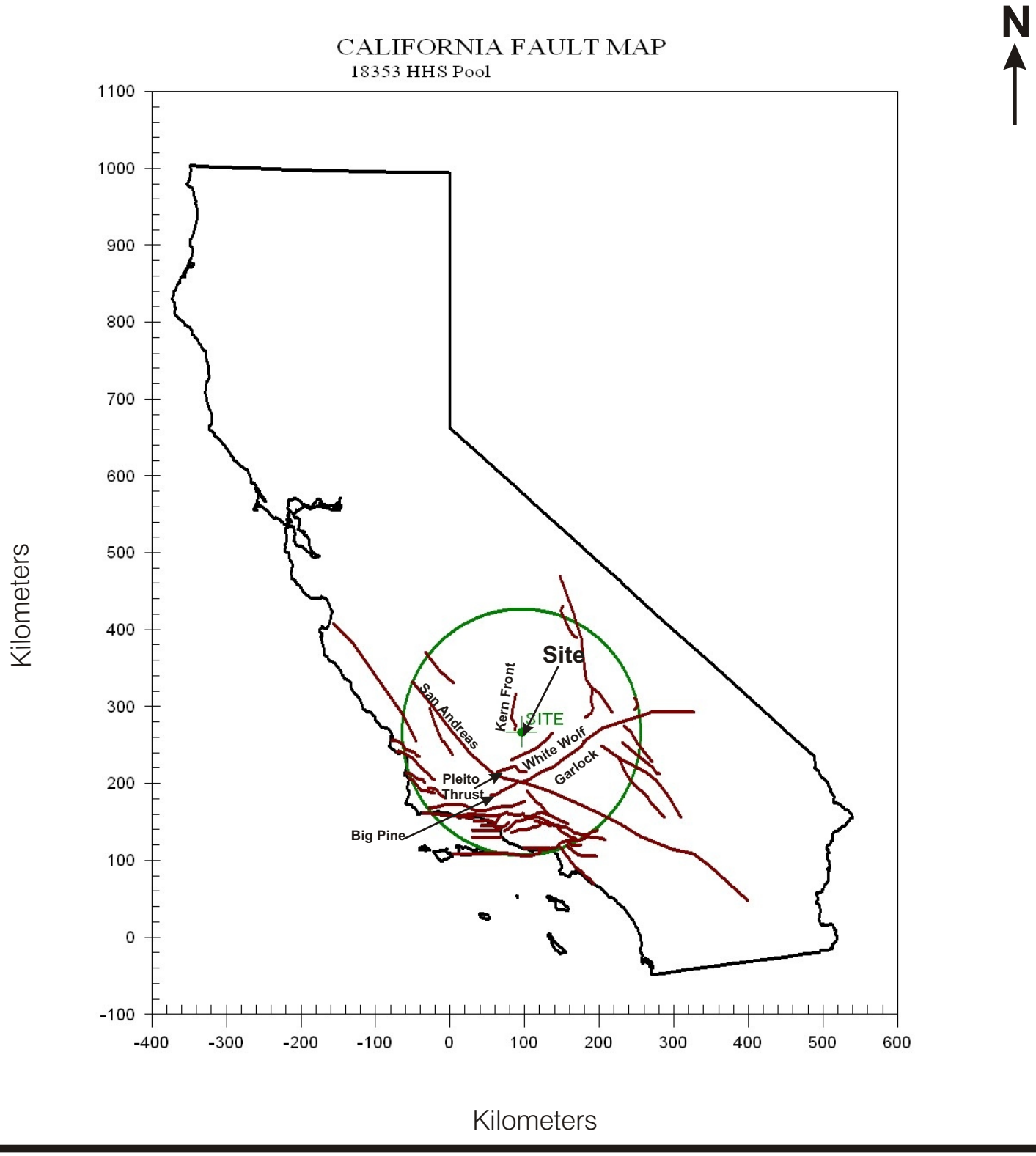

SOILS ENGINEERING, INC. **4400 Yeager Way** **Bakersfield, CA 93313** **(661) 831-5100** DATE: 10/22 PROJECT: #18353	**New Highland High School Swimming Pool** **2900 Royal Scots Way** **Bakersfield, CA** Fault Location Map	PLATE 5

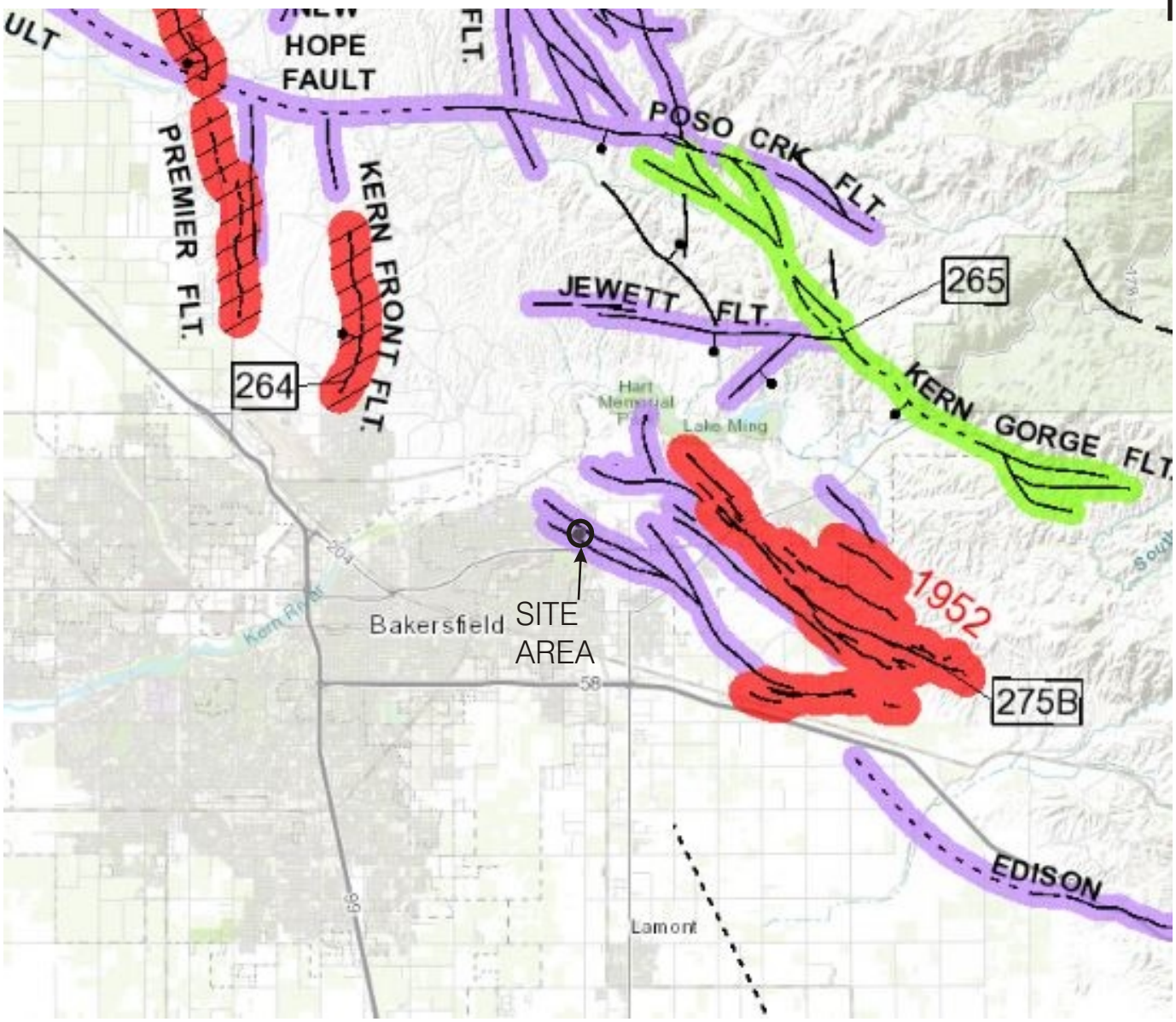

Fault with Historic Displacement (last 200 years)

Fault with Holocene Displacement (during last 11,700 years)

Fault with Late Quaternary Displacement (during last 700,000 years)

Quaternary Fault (age undetermined)

SOURCE: 2010 Fault Activity Map of California, CDMG

SOILS ENGINEERING, INC. **4400 Yeager Way** **Bakersfield, CA 93313** **(661) 831-5100** DATE: 10/22 PROJECT: #18353	**New Highland High School Swimming Pool** **2900 Royal Scots Way** **Bakersfield, CA** **REGIONAL FAULT MAP**	PLATE 5A

Basic Well Symbols	
Well Status or Type	**Symbol**
Active	
New	
Idle	
Plugged	
Unknown	
Canceled	
Oil, Gas	
Dry Gas	
Injector	
Cyclic Steam	
Gas Storage	
Observation	O
Water Source	W
Multi	M
Unknown	?

Plugged/Abandoned Oil Well

N

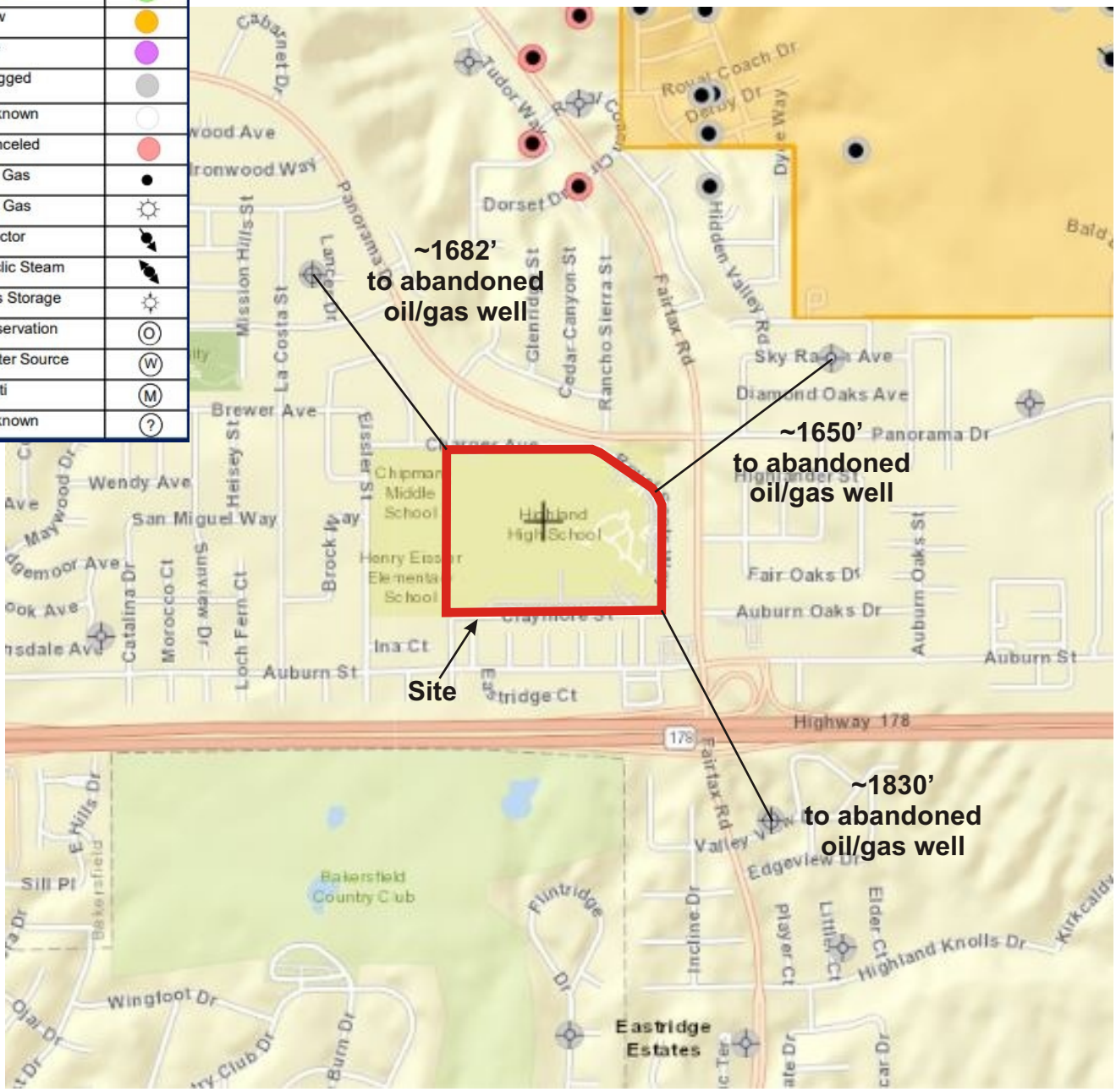

SOILS ENGINEERING, INC. **4400 Yeager Way** **Bakersfield, CA 93313** **(661) 831 - 5100** DATE: 10/22 PROJECT: #18353	**New Highland High School Swimming Pool** **2900 Royal Scots Way** **Bakersfield, CA** **CalGEM Oil Well Map**	**PLATE** **6**

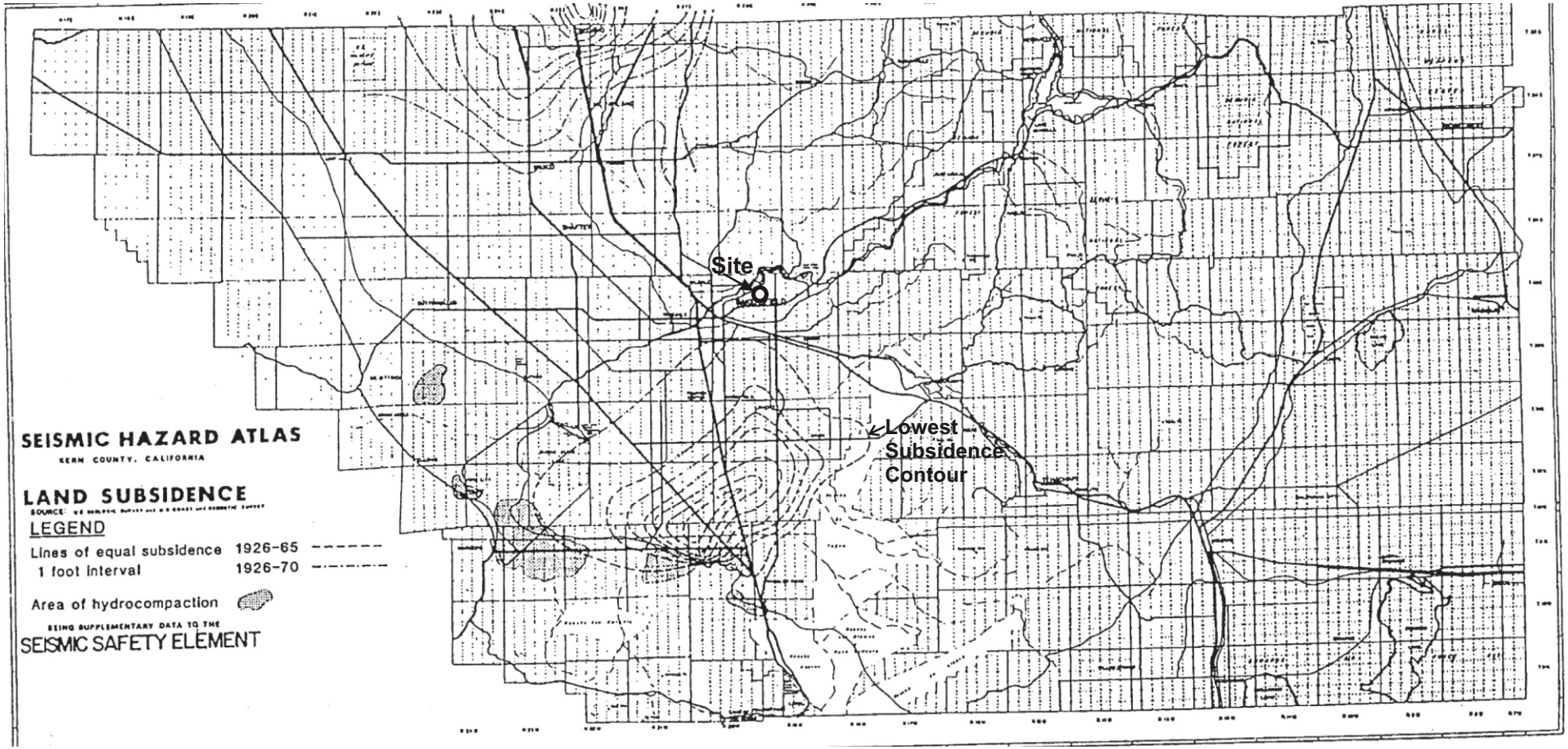

Regional Land Subsidence Map

From City of Bakersfield Safety Element (Figure 15)

Plate 7

Appendix A

EQFAULTWIN data, EQSEARCHWIN data, USGS Seismic Design Maps SEAOC/OSHPD, and USGS Uniform Hazard Tool Results.

```
**********************
*                    *
*    E Q F A U L T   *
*                    *
*    Version 3.00    *
*                    *
**********************
```

DETERMINISTIC ESTIMATION OF
PEAK ACCELERATION FROM DIGITIZED FAULTS

JOB NUMBER: 18353

DATE: 04-05-2022

JOB NAME: 18353 HHS Pool

CALCULATION NAME: Test Run Analysis

FAULT-DATA-FILE NAME: CGSFLTE.DAT

SITE COORDINATES:
SITE LATITUDE: 35.4010
SITE LONGITUDE: 118.9341

SEARCH RADIUS: 100 mi

ATTENUATION RELATION: 3) Boore et al. (1997) Horiz. - NEHRP D (250)
UNCERTAINTY (M=Median, S=Sigma): M Number of Sigmas: 0.0
DISTANCE MEASURE: cd_2drp
SCOND: 0
Basement Depth: 5.00 km Campbell SSR: Campbell SHR:
COMPUTE PEAK HORIZONTAL ACCELERATION

FAULT-DATA FILE USED: CGSFLTE.DAT

MINIMUM DEPTH VALUE (km): 0.0

EQFAULT SUMMARY

DETERMINISTIC SITE PARAMETERS

Page 1

ABBREVIATED FAULT NAME	APPROXIMATE DISTANCE mi (km)	ESTIMATED MAX. EARTHQUAKE EVENT MAXIMUM EARTHQUAKE MAG.(Mw)	PEAK SITE ACCEL. g	EST. SITE INTENSITY MOD.MERC.
Kern Front	6.3(10.2)	6.3	0.293	IX
WHITE WOLF	16.7(26.9)	7.3	0.254	IX
PLEITO THRUST	28.0(45.0)	7.0	0.147	VIII
GARLOCK (West)	35.8(57.6)	7.3	0.117	VII
SAN ANDREAS - Whole M-1a	39.5(63.6)	8.0	0.157	VIII
SAN ANDREAS - Carrizo M-1c-2	39.5(63.6)	7.4	0.114	VII
SAN ANDREAS - 1857 Rupture M-2a	39.5(63.6)	7.8	0.141	VIII
SAN ANDREAS - Cho-Moj M-1b-1	39.5(63.6)	7.8	0.141	VIII
BIG PINE	40.3(64.8)	6.9	0.086	VII
SAN GABRIEL	47.6(76.6)	7.2	0.089	VII
GARLOCK (East)	51.9(83.5)	7.5	0.097	VII
SAN ANDREAS - Cholame M-1c-1	52.8(85.0)	7.3	0.086	VII
SAN ANDREAS - Mojave M-1c-3	54.1(87.1)	7.4	0.089	VII
So. SIERRA NEVADA	54.2(87.2)	7.3	0.103	VII
SANTA YNEZ (East)	56.2(90.5)	7.1	0.074	VII
SAN JUAN	60.4(97.2)	7.1	0.070	VI
SAN CAYETANO	60.9(98.0)	7.0	0.080	VII
M.RIDGE-ARROYO PARIDA-SANTA ANA	62.4(100.5)	7.2	0.088	VII
SANTA SUSANA	67.2(108.2)	6.7	0.064	VI

LENWOOD-LOCKHART-OLD WOMAN SPRGS	67.2(108.2)	7.5	0.080	VII
HOLSER	67.3(108.3)	6.5	0.057	VI
LITTLE LAKE	69.0(111.0)	6.9	0.057	VI
NORTH CHANNEL SLOPE	69.0(111.1)	7.4	0.090	VII
OAK RIDGE (Onshore)	69.7(112.1)	7.0	0.072	VII
NORTHRIDGE (E. Oak Ridge)	70.0(112.6)	7.0	0.072	VII
RED MOUNTAIN	70.2(113.0)	7.0	0.072	VI
GREAT VALLEY 14	70.6(113.6)	6.4	0.052	VI
SIMI-SANTA ROSA	72.1(116.1)	7.0	0.071	VI
SIERRA MADRE (San Fernando)	72.5(116.6)	6.7	0.060	VI
VENTURA - PITAS POINT	72.5(116.6)	6.9	0.067	VI
SANTA YNEZ (West)	72.5(116.7)	7.1	0.061	VI
OWENS VALLEY	76.4(123.0)	7.6	0.076	VII
OAK RIDGE MID-CHANNEL STRUCTURE	76.6(123.2)	6.6	0.055	VI
SAN LUIS RANGE (S. Margin)	77.5(124.8)	7.2	0.074	VII
VERDUGO	79.6(128.1)	6.9	0.062	VI
CHANNEL IS. THRUST (Eastern)	80.3(129.3)	7.5	0.084	VII
SAN ANDREAS - Parkfield	80.7(129.8)	6.5	0.041	V
SIERRA MADRE	82.4(132.6)	7.2	0.071	VI
LOS ALAMOS-W. BASELINE	83.0(133.5)	6.9	0.060	VI
GRAVEL HILLS - HARPER LAKE	83.9(135.1)	7.1	0.054	VI

DETERMINISTIC SITE PARAMETERS

ABBREVIATED FAULT NAME	APPROXIMATE DISTANCE mi (km)	ESTIMATED MAX. EARTHQUAKE EVENT: MAXIMUM EARTHQUAKE MAG.(Mw)	ESTIMATED MAX. EARTHQUAKE EVENT: PEAK SITE ACCEL. g	ESTIMATED MAX. EARTHQUAKE EVENT: EST. SITE INTENSITY MOD.MERC.
HELENDALE - S. LOCKHARDT	84.1(135.3)	7.3	0.060	VI
GREAT VALLEY 13	85.4(137.5)	6.5	0.048	VI
BLACKWATER	85.7(138.0)	7.1	0.053	VI
ANACAPA-DUME	86.1(138.6)	7.5	0.080	VII
OAK RIDGE(Blind Thrust Offshore)	86.7(139.6)	7.1	0.064	VI
LIONS HEAD	86.7(139.6)	6.6	0.050	VI
LOS OSOS	87.9(141.5)	7.0	0.060	VI
RINCONADA	89.0(143.2)	7.5	0.064	VI
INDEPENDENCE	89.6(144.2)	7.1	0.063	VI
CASMALIA (Orcutt Frontal Fault)	90.2(145.2)	6.5	0.046	VI
MALIBU COAST	91.1(146.6)	6.7	0.050	VI
CLAMSHELL-SAWPIT	91.4(147.1)	6.5	0.045	VI
HOLLYWOOD	92.4(148.7)	6.4	0.042	VI
TANK CANYON	93.0(149.7)	6.4	0.042	VI

UPPER ELYSIAN PARK BLIND THRUST	93.8(150.9)	6.4	0.042	VI
PUENTE HILLS BLIND THRUST	94.7(152.4)	7.1	0.060	VI
SANTA MONICA	94.7(152.4)	6.6	0.046	VI
RAYMOND	95.1(153.1)	6.5	0.044	VI
NEWPORT-INGLEWOOD (L.A.Basin)	98.7(158.8)	7.1	0.048	VI

****

-END OF SEARCH- 59 FAULTS FOUND WITHIN THE SPECIFIED SEARCH RADIUS.

THE Kern Front FAULT IS CLOSEST TO THE SITE.
IT IS ABOUT 6.3 MILES (10.2 km) AWAY.

LARGEST MAXIMUM-EARTHQUAKE SITE ACCELERATION: 0.2926 g

CALIFORNIA FAULT MAP

18353 HHS Pool

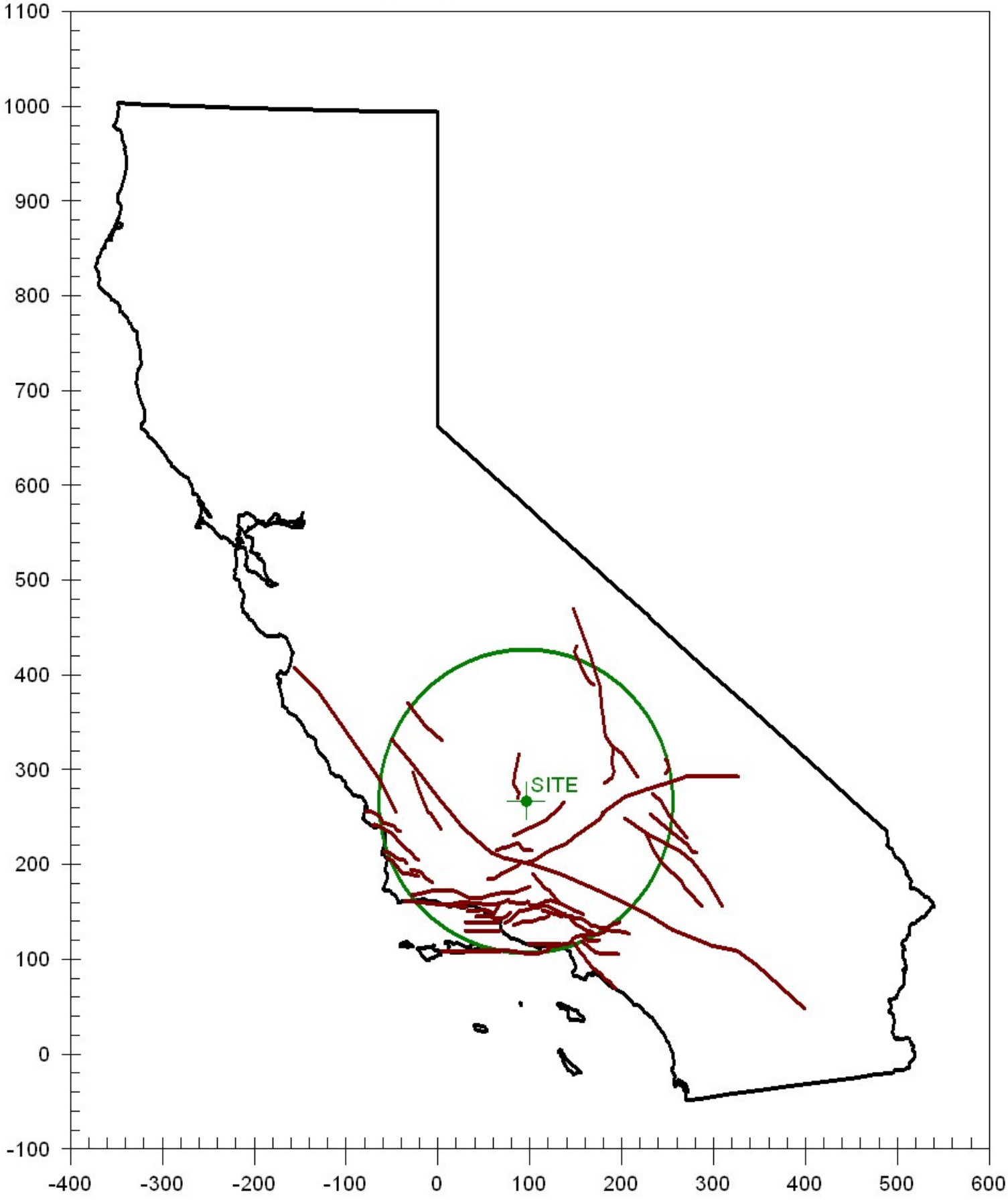

```
*************************
*                       *
*    E Q S E A R C H    *
*                       *
*     Version 3.00      *
*                       *
*************************

      ESTIMATION OF
  PEAK ACCELERATION FROM
CALIFORNIA EARTHQUAKE CATALOGS


JOB NUMBER: 18353
                                                DATE: 10-10-2022

JOB NAME: 18353 HHS

EARTHQUAKE-CATALOG-FILE NAME: ALLQUAKE.DAT

SITE COORDINATES:
   SITE LATITUDE:  35.4010
   SITE LONGITUDE:  118.9341

SEARCH DATES:
           START DATE:   1800
           END DATE:   2010

SEARCH RADIUS:
           100.0 mi
           160.9 km

ATTENUATION RELATION:   3) Boore et al. (1997) Horiz. - NEHRP D (250)
   UNCERTAINTY (M=Median, S=Sigma): M       Number of Sigmas:  0.0
   ASSUMED SOURCE TYPE:  DS [SS=Strike-slip, DS=Reverse-slip, BT=Blind-
thrust]
   SCOND:   0  Depth Source:  A
   Basement Depth:  5.00 km     Campbell SSR:        Campbell SHR:
   COMPUTE PEAK HORIZONTAL ACCELERATION

MINIMUM DEPTH VALUE (km):  0.0
```

EARTHQUAKE SEARCH RESULTS

Page 1

FILE CODE	LAT. NORTH	LONG. WEST	DATE	TIME (UTC) H M Sec	DEPTH (km)	QUAKE MAG.	SITE ACC. g	SITE MM INT.	APPROX. DISTANCE mi [km]
DMG	35.3330	118.9170	08/22/1952	224124.0	0.0	5.80	0.263	IX	4.8(7.7)
DMG	35.3830	118.8500	07/29/1952	7 347.0	0.0	6.10	0.304	IX	4.9(7.9)
DMG	35.4000	118.8170	07/29/1952	8 146.0	0.0	5.10	0.152	VIII	6.6(10.6)
DMG	35.3000	118.8000	12/23/1905	2223 0.0	0.0	5.00	0.107	VII	10.3(16.5)
DMG	35.2170	118.8170	07/23/1952	1317 5.0	0.0	5.70	0.123	VII	14.3(23.0)
DMG	35.5000	118.7000	01/06/1905	1430 0.0	0.0	5.00	0.083	VII	14.8(23.9)
DMG	35.6000	118.8000	06/30/1926	1331 0.0	0.0	5.00	0.079	VII	15.7(25.2)
DMG	35.3330	118.6000	07/31/1952	12 9 9.0	0.0	5.80	0.103	VII	19.4(31.2)
GSP	35.1490	119.1040	05/28/1993	044740.6	21.0	5.20	0.074	VII	19.9(32.0)
DMG	35.3670	118.5830	07/23/1952	31923.0	0.0	5.00	0.066	VI	19.9(32.0)
DMG	35.3670	118.5830	07/23/1952	03832.0	0.0	6.10	0.118	VII	19.9(32.0)
DMG	35.1330	118.7670	07/21/1952	194122.0	0.0	5.50	0.084	VII	20.8(33.4)
DMG	35.1830	118.6500	07/21/1952	151358.0	0.0	5.10	0.065	VI	22.0(35.4)
DMG	35.1500	118.6330	01/27/1954	141948.0	0.0	5.00	0.057	VI	24.3(39.0)
DMG	35.3150	118.5160	07/25/1952	194323.7	11.2	5.70	0.082	VII	24.3(39.1)
DMG	35.3110	118.4990	07/25/1952	1313 8.2	2.8	5.00	0.055	VI	25.3(40.7)
DMG	35.2330	118.5330	07/21/1952	174244.0	0.0	5.10	0.058	VI	25.4(40.9)
DMG	35.3170	118.4940	07/25/1952	19 944.6	5.5	5.70	0.079	VII	25.4(41.0)
DMG	35.0000	119.0000	07/21/1952	12 531.0	0.0	6.40	0.107	VII	27.9(44.9)
DMG	35.0000	119.0000	02/16/1919	1557 0.0	0.0	5.00	0.051	VI	27.9(44.9)
DMG	35.0000	119.0170	07/21/1952	115214.0	0.0	7.70	0.211	VIII	28.1(45.2)
DMG	35.0000	119.0170	01/12/1954	233349.0	0.0	5.90	0.082	VII	28.1(45.2)
DMG	35.0000	119.0330	07/21/1952	12 2 0.0	0.0	5.60	0.070	VI	28.2(45.4)
DMG	35.0000	118.8330	07/23/1952	75319.0	0.0	5.40	0.063	VI	28.3(45.5)
DMG	35.0000	118.8330	07/23/1952	181351.0	0.0	5.20	0.056	VI	28.3(45.5)
DMG	34.9830	118.9830	05/23/1954	235243.0	0.0	5.10	0.052	VI	29.0(46.6)
DMG	34.9500	118.8670	07/21/1952	121936.0	0.0	5.30	0.055	VI	31.4(50.5)
DMG	34.9410	118.9870	11/15/1961	53855.5	10.7	5.00	0.046	VI	31.9(51.3)
DMG	34.9320	118.9760	03/01/1963	02557.9	13.9	5.00	0.046	VI	32.5(52.2)
T-A	34.9200	118.9200	05/23/1857	0 0 0.0	0.0	5.00	0.045	VI	33.2(53.5)
T-A	34.9200	118.9200	01/20/1857	0 0 0.0	0.0	5.00	0.045	VI	33.2(53.5)
PAS	34.9430	118.7430	06/10/1988	23 643.0	6.8	5.40	0.055	VI	33.4(53.8)
DMG	34.9000	118.9500	08/01/1952	13 430.0	0.0	5.10	0.046	VI	34.6(55.7)
DMG	34.9000	118.9000	10/23/1916	244 0.0	0.0	6.00	0.073	VII	34.6(55.7)
DMG	34.8670	118.9330	09/21/1941	1953 7.2	0.0	5.20	0.046	VI	36.9(59.3)
T-A	34.8300	118.7500	11/27/1852	0 0 0.0	0.0	7.00	0.110	VII	40.8(65.6)
DMG	34.8000	119.1000	09/05/1883	1230 0.0	0.0	6.00	0.063	VI	42.5(68.5)
DMG	36.0800	118.8200	05/29/1915	646 0.0	0.0	5.00	0.034	V	47.3(76.1)
DMG	34.7000	119.0000	10/23/1916	254 0.0	0.0	5.50	0.043	VI	48.5(78.1)
DMG	35.3000	119.8000	01/09/1857	16 0 0.0	0.0	7.90	0.152	VIII	49.3(79.3)
GSP	35.2100	118.0660	07/11/1992	181416.2	10.0	5.70	0.047	VI	50.7(81.5)
DMG	35.7150	118.0740	03/15/1946	14 035.4	0.0	5.30	0.037	V	52.9(85.2)
DMG	35.7250	118.0550	03/15/1946	134935.9	22.0	6.30	0.061	VI	54.2(87.2)
DMG	35.7450	118.0390	03/16/1946	94617.9	0.0	5.10	0.032	V	55.6(89.5)
DMG	35.7780	118.0490	01/28/1961	81246.2	5.5	5.30	0.035	V	56.1(90.3)
DMG	35.7510	118.0290	03/15/1946	215433.4	0.0	5.20	0.033	V	56.3(90.6)
T-A	36.1700	119.3200	07/25/1868	230 0.0	0.0	5.00	0.029	V	57.3(92.2)
DMG	35.7140	117.9770	03/15/1946	191853.6	0.0	5.40	0.036	V	57.9(93.2)
DMG	35.7530	117.9860	03/15/1946	1321 0.9	0.0	5.20	0.032	V	58.5(94.2)
DMG	35.7470	117.9080	03/18/1946	155042.6	4.4	5.30	0.032	V	62.4(100.4)
DMG	34.5000	119.5000	06/29/1926	2321 0.0	0.0	5.50	0.033	V	70.0(112.6)
DMG	34.5000	119.5000	08/05/1930	1125 0.0	0.0	5.00	0.025	V	70.0(112.6)
GSP	34.3940	118.6690	06/26/1995	084028.9	13.0	5.00	0.025	V	71.1(114.

EARTHQUAKE SEARCH RESULTS

FILE CODE	LAT. NORTH	LONG. WEST	DATE	TIME (UTC) H M Sec	DEPTH (km)	QUAKE MAG.	SITE ACC. g	SITE MM INT.	APPROX. DISTANCE mi [km]
GSB	34.3790	118.7110	01/19/1994	210928.6	14.0	5.50	0.032	V	71.7(115.4)
GSP	34.3770	118.6980	01/18/1994	004308.9	11.0	5.20	0.027	V	72.0(115.8)
DMG	35.8310	117.7610	10/19/1961	5 943.9	-2.0	5.20	0.027	V	72.2(116.2)
GSP	34.3690	118.6720	04/26/1997	103730.7	16.0	5.10	0.026	V	72.8(117.1)
GSP	34.3780	118.6180	01/19/1994	211144.9	11.0	5.10	0.026	V	72.9(117.3)
DMG	34.5190	118.1980	08/23/1952	10 9 7.1	13.1	5.00	0.024	V	73.8(118.7)
DMG	34.4110	118.4010	02/09/1971	14 041.8	8.4	6.40	0.050	VI	74.7(120.2)
DMG	34.4110	118.4010	02/09/1971	14 244.0	8.0	5.80	0.036	V	74.7(120.2)
DMG	34.4110	118.4010	02/09/1971	141028.0	8.0	5.30	0.028	V	74.7(120.2)
DMG	34.4110	118.4010	02/09/1971	14 1 8.0	8.0	5.80	0.036	V	74.7(120.2)
T-A	34.5000	119.6700	06/01/1893	12 0 0.0	0.0	5.00	0.024	IV	74.9(120.5)
GSP	34.3260	118.6980	01/17/1994	233330.7	9.0	5.60	0.033	V	75.4(121.4)
GSP	35.7760	117.6620	08/17/1995	223959.0	5.0	5.40	0.029	V	76.0(122.3)
GSP	35.7660	117.6490	01/07/1996	143253.1	5.0	5.20	0.026	V	76.4(123.0)
GSB	35.7610	117.6390	09/20/1995	232736.3	5.0	6.10	0.042	VI	76.9(123.7)
DMG	35.7500	120.2500	03/10/1922	112120.0	0.0	6.50	0.051	VI	77.7(125.1)
GSP	34.3050	118.5790	01/29/1994	112036.0	1.0	5.10	0.024	V	78.3(126.0)
DMG	34.3000	118.6000	04/04/1893	1940 0.0	0.0	6.00	0.039	V	78.3(126.1)
GSB	34.3010	118.5650	01/17/1994	204602.4	9.0	5.20	0.026	V	78.8(126.8)
DMG	34.3080	118.4540	02/09/1971	144346.7	6.2	5.20	0.025	V	80.2(129.1)
DMG	34.3670	119.5830	07/01/1941	75054.8	0.0	5.90	0.036	V	80.3(129.2)
PAS	36.1510	120.0490	08/04/1985	12 156.0	6.0	5.80	0.034	V	81.1(130.6)
DMG	35.6310	117.5130	09/17/1938	1423 4.1	-2.0	5.00	0.022	IV	81.4(131.0)
MGI	34.4000	119.7000	03/25/1806	8 0 0.0	0.0	5.00	0.022	IV	81.6(131.3)
DMG	35.7500	120.3300	08/18/1922	512 0.0	0.0	5.00	0.022	IV	82.0(132.0)
DMG	35.8000	120.3300	06/08/1934	447 0.0	0.0	6.00	0.037	V	83.1(133.7)
DMG	35.8000	120.3300	12/28/1939	121538.0	0.0	5.00	0.022	IV	83.1(133.7)
DMG	35.8000	120.3300	06/08/1934	430 0.0	0.0	5.00	0.022	IV	83.1(133.7)
DMG	35.8000	120.3300	06/05/1934	2148 0.0	0.0	5.00	0.022	IV	83.1(133.7)
T-A	34.4200	119.8200	00/00/1862	0 0 0.0	0.0	5.70	0.032	V	84.3(135.6)
PAS	34.3470	119.6960	08/13/1978	225453.4	12.8	5.10	0.023	IV	84.6(136.2)
GSP	34.2310	118.4750	03/20/1994	212012.3	13.0	5.30	0.025	V	84.9(136.6)
GSP	34.2130	118.5370	01/17/1994	123055.4	18.0	6.70	0.053	VI	85.1(136.9)
GSP	36.0750	117.6500	11/27/1996	201724.1	1.0	5.30	0.025	V	85.7(137.9)
GSP	36.0670	117.6380	03/06/1998	054740.3	1.0	5.20	0.024	IV	86.0(138.3)
DMG	36.4000	118.0000	07/05/1871	21 6 0.0	0.0	5.20	0.024	IV	86.5(139.2)
GSP	36.0760	117.6180	03/07/1998	003646.8	1.0	5.00	0.021	IV	87.2(140.4)
MGI	36.6000	118.4000	09/04/1868	0 0 0.0	0.0	5.00	0.021	IV	88.0(141.6)
MGI	35.2500	120.5000	07/10/1917	045 0.0	0.0	5.30	0.024	V	88.8(142.9)
MGI	35.2500	120.5000	07/09/1917	2238 0.0	0.0	5.30	0.024	V	88.8(142.9)
MGI	35.2500	120.5000	07/10/1917	043 0.0	0.0	5.30	0.024	V	88.8(142.9)
MGI	35.2500	120.5000	07/09/1917	2222 0.0	0.0	5.00	0.021	IV	88.8(142.9)
MGI	34.9000	120.4000	03/29/1928	625 0.0	0.0	5.30	0.024	V	89.7(144.3)
DMG	34.3000	119.8000	06/29/1925	144216.0	0.0	6.25	0.040	V	90.5(145.6)
MGI	34.3000	119.8000	07/03/1925	1821 0.0	0.0	5.30	0.024	V	90.5(145.6)
MGI	34.3000	119.8000	07/03/1925	1638 0.0	0.0	5.30	0.024	V	90.5(145.6)
DMG	34.7000	120.3000	01/12/1915	431 0.0	0.0	5.50	0.027	V	91.1(146.6)
DMG	34.7000	120.3000	07/31/1902	920 0.0	0.0	5.50	0.027	V	91.1(146.6)
PAS	36.1820	120.2680	02/14/1987	72650.8	6.0	5.10	0.021	IV	92.1(148.3)
DMG	34.0650	119.0350	02/21/1973	144557.3	8.0	5.90	0.033	V	92.4(148.7)
MGI	35.0000	120.5000	11/19/1927	332 0.0	0.0	5.00	0.020	IV	92.6(149.0)
MGI	34.8000	120.4000	12/12/1902	0 0 0.0	0.0	5.70	0.029	V	92.6(149.0)
GSB	35.9170	120.4650	12/20/1994	102747.2	8.0	5.00	0.020	IV	93.0(149.

EARTHQUAKE SEARCH RESULTS

FILE CODE	LAT. NORTH	LONG. WEST	DATE	TIME (UTC) H M Sec	DEPTH (km)	QUAKE MAG.	SITE ACC. g	SITE MM INT.	APPROX. DISTANCE mi [km]
BRK	36.2200	120.2600	09/09/1983	91614.0	0.0	5.40	0.025	V	93.3(150.2)
DMG	34.1000	119.4000	05/19/1893	035 0.0	0.0	5.50	0.026	V	93.6(150.7)
MGI	35.5000	120.6000	01/01/1830	0 0 0.0	0.0	5.00	0.020	IV	93.9(151.2)
DMG	36.1700	120.3200	12/27/1926	919 0.0	0.0	5.00	0.020	IV	94.0(151.3)
DMG	35.9300	120.4800	12/24/1934	1626 0.0	0.0	5.00	0.020	IV	94.1(151.4)
DMG	35.9500	120.4700	11/16/1956	323 9.0	0.0	5.00	0.020	IV	94.1(151.5)
MGI	36.5800	118.0800	07/06/1917	11 1 0.0	0.0	5.70	0.029	V	94.4(151.8)
T-A	36.5800	118.0700	08/13/1882	0 0 0.0	0.0	5.00	0.020	IV	94.6(152.3)
T-A	36.5800	118.0700	04/18/1872	0 0 0.0	0.0	5.00	0.020	IV	94.6(152.3)
BRK	36.2200	120.2900	05/02/1983	234239.0	0.0	6.70	0.049	VI	94.7(152.3)
BRK	36.2200	120.2900	05/02/1983	2346 6.0	0.0	5.60	0.027	V	94.7(152.3)
GSP	34.2620	118.0020	06/28/1991	144354.5	11.0	5.40	0.025	V	94.7(152.5)
MGI	36.6000	118.1000	05/17/1872	21 0 0.0	0.0	5.00	0.020	IV	95.0(152.9)
BRK	36.2400	120.2900	05/09/1983	24912.0	0.0	5.20	0.022	IV	95.5(153.7)
DMG	35.9500	120.5000	06/28/1966	42613.4	0.0	5.50	0.026	V	95.7(153.9)
DMG	35.9700	120.5000	06/28/1966	4 856.2	0.0	5.10	0.021	IV	96.2(154.8)
DMG	34.2000	119.8000	12/21/1812	19 0 0.0	0.0	7.00	0.056	VI	96.4(155.1)
DMG	36.7000	118.3000	08/17/1896	1130 0.0	0.0	5.90	0.032	V	96.4(155.2)
MGI	34.0000	119.0000	12/14/1912	0 0 0.0	0.0	5.70	0.028	V	96.8(155.8)
DMG	34.0000	119.0000	09/24/1827	4 0 0.0	0.0	7.00	0.056	VI	96.8(155.8)
DMG	36.0000	120.5000	02/02/1881	011 0.0	0.0	5.60	0.027	V	97.0(156.2)
DMG	36.0000	120.5000	03/03/1901	745 0.0	0.0	5.50	0.025	V	97.0(156.2)
DMG	35.9500	120.5300	06/29/1966	195325.9	0.0	5.00	0.020	IV	97.2(156.4)
T-A	35.2500	120.6700	12/17/1852	0 0 0.0	0.0	5.70	0.028	V	98.3(158.3)
T-A	35.2500	120.6700	00/00/1830	0 0 0.0	0.0	5.70	0.028	V	98.3(158.3)
BRK	36.2100	120.3800	07/25/1983	223140.0	0.0	5.10	0.020	IV	98.4(158.3)
DMG	34.1180	119.7020	07/05/1968	04517.2	5.9	5.20	0.021	IV	98.7(158.9)
MGI	34.0800	118.2600	07/16/1920	18 8 0.0	0.0	5.00	0.019	IV	98.9(159.2)
BRK	36.2000	120.4000	07/22/1983	343 2.0	0.0	5.00	0.019	IV	98.9(159.2)
MGI	34.6000	120.4000	07/28/1902	657 0.0	0.0	6.30	0.038	V	99.7(160.4)
MGI	34.6000	120.4000	08/01/1902	330 0.0	0.0	6.30	0.038	V	99.7(160.4)
BRK	36.2200	120.4000	07/22/1983	23955.0	0.0	6.00	0.032	V	99.7(160.4)
MGI	35.3000	120.7000	12/07/1906	640 0.0	0.0	5.90	0.031	V	99.7(160.4)
DMG	34.0000	118.5000	08/04/1927	1224 0.0	0.0	5.00	0.019	IV	99.8(160.6)
MGI	34.0000	118.5000	11/19/1918	2018 0.0	0.0	5.00	0.019	IV	99.8(160.6)

****

-END OF SEARCH- 141 EARTHQUAKES FOUND WITHIN THE SPECIFIED SEARCH AREA.

TIME PERIOD OF SEARCH: 1800 TO 2010

LENGTH OF SEARCH TIME: 211 years

THE EARTHQUAKE CLOSEST TO THE SITE IS ABOUT 4.8 MILES (7.7 km) AWAY.

LARGEST EARTHQUAKE MAGNITUDE FOUND IN THE SEARCH RADIUS: 7.9

LARGEST EARTHQUAKE SITE ACCELERATION FROM THIS SEARCH: 0.304 g

COEFFICIENTS FOR GUTENBERG & RICHTER RECURRENCE RELATION:
a-value= 1.604
b-value= 0.404
beta-value= 0.931

TABLE OF MAGNITUDES AND EXCEEDANCES:

Earthquake Magnitude	Number of Times Exceeded	Cumulative No. / Year
4.0	141	0.67143
4.5	141	0.67143
5.0	141	0.67143
5.5	55	0.26190
6.0	22	0.10476
6.5	8	0.03810
7.0	5	0.02381
7.5	2	0.00952

EARTHQUAKE EPICENTER MAP

18353 HHS

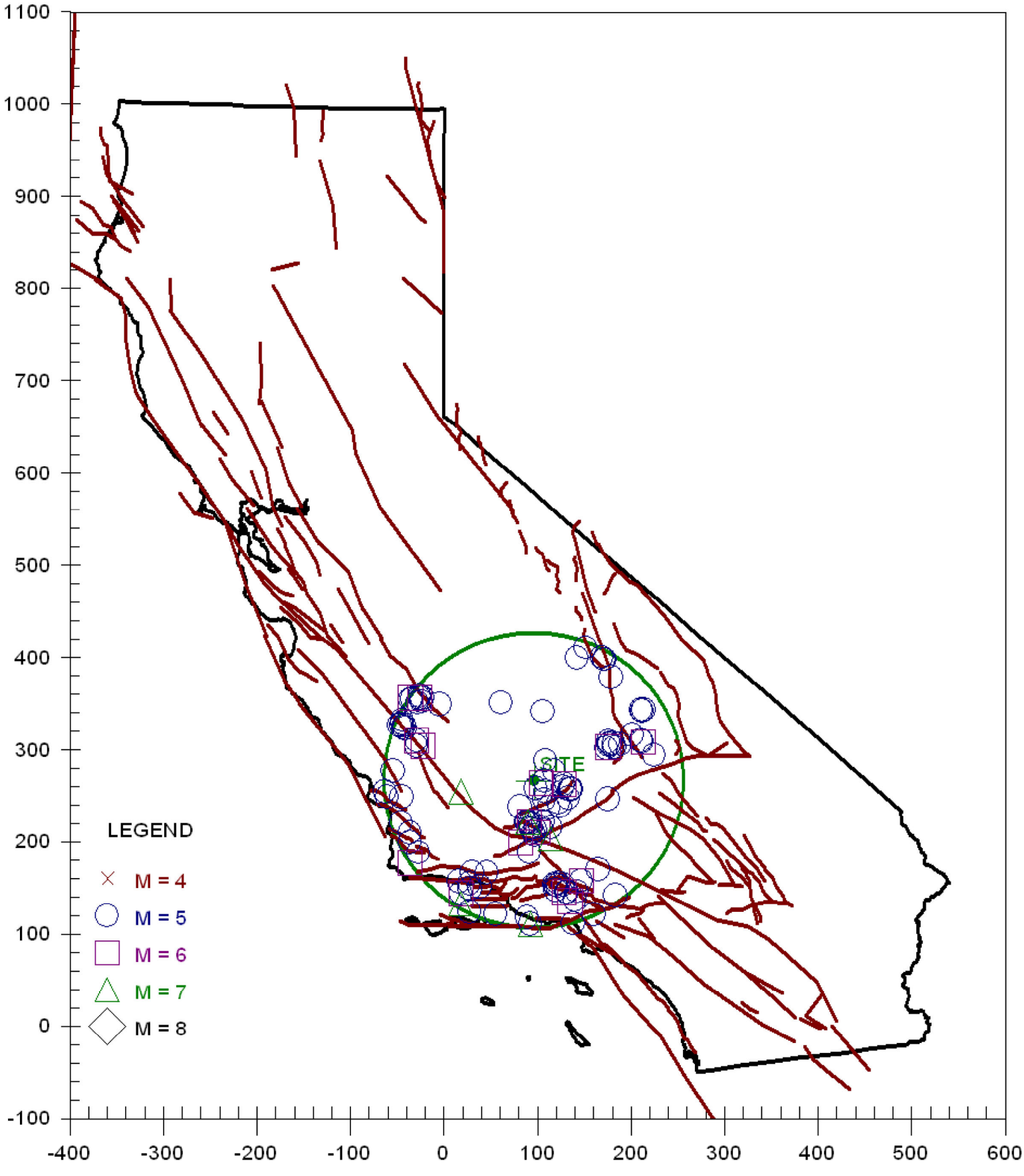

Number of Earthquakes (N) Above Magnitude (M)

18353 HHS

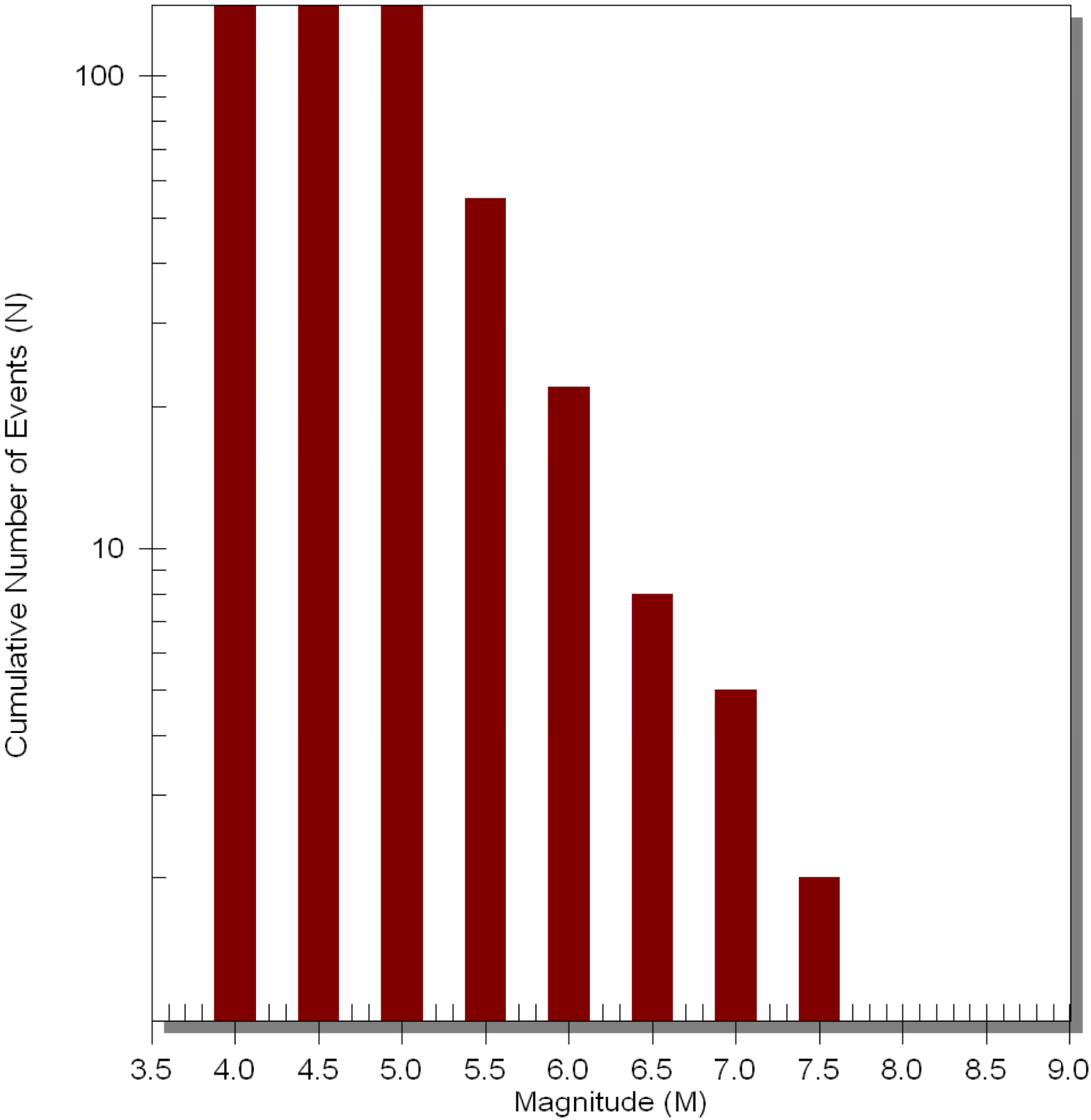

EARTHQUAKE RECURRENCE CURVE

18353 HHS

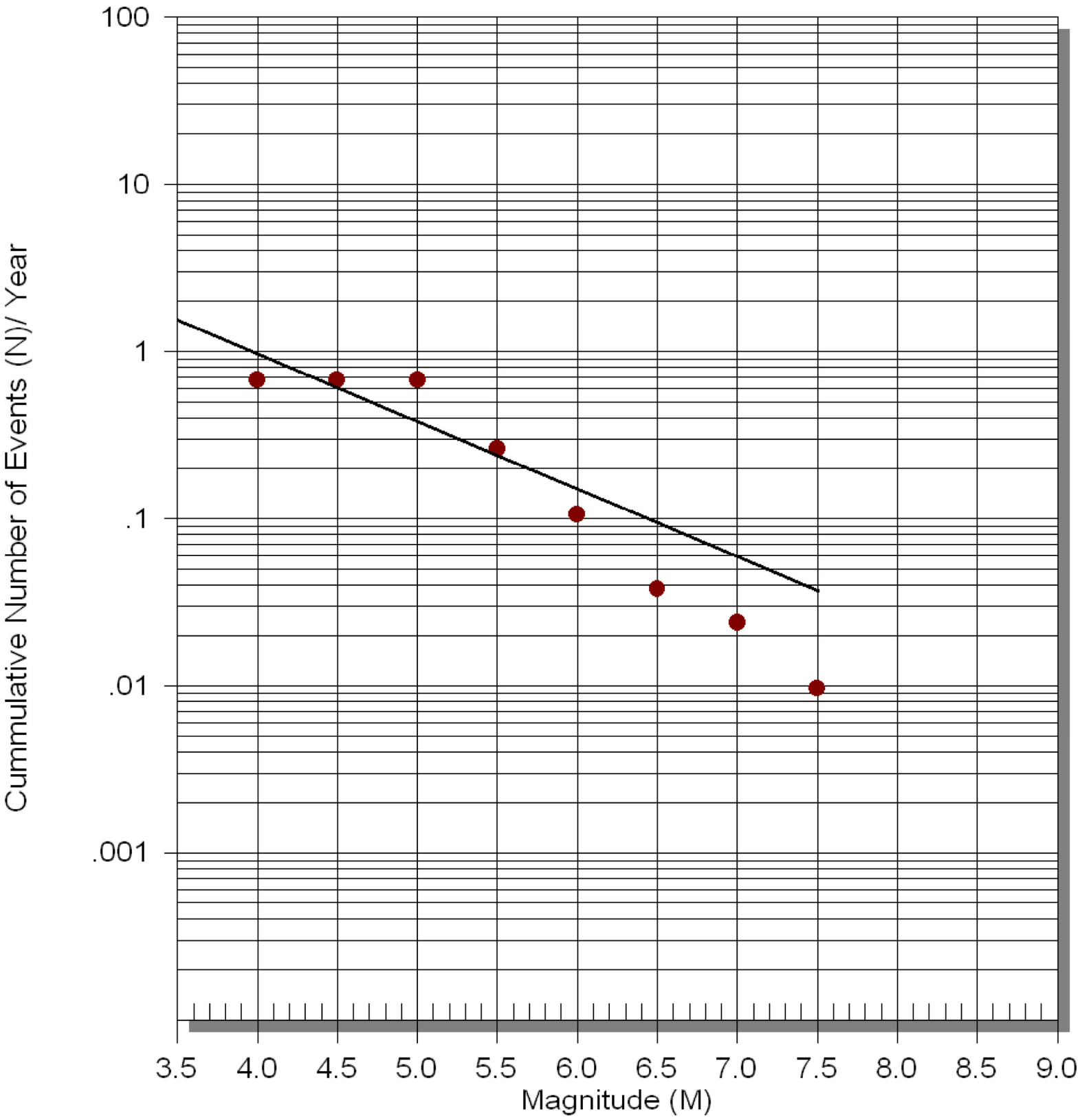

18353 New Highland High School Swimming Pool

Latitude, Longitude: 35.4010, -118.9341



Date	4/5/2022, 3:29:18 PM
Design Code Reference Document	ASCE7-16
Risk Category	II
Site Class	D - Stiff Soil

Type	Value	Description
S_S	0.916	MCE_R ground motion. (for 0.2 second period)
S_1	0.329	MCE_R ground motion. (for 1.0s period)
S_{MS}	1.039	Site-modified spectral acceleration value
S_{M1}	null -See Section 11.4.8	Site-modified spectral acceleration value
S_{DS}	0.692	Numeric seismic design value at 0.2 second SA
S_{D1}	null -See Section 11.4.8	Numeric seismic design value at 1.0 second SA

Type	Value	Description
SDC	null -See Section 11.4.8	Seismic design category
F_a	1.133	Site amplification factor at 0.2 second
F_v	null -See Section 11.4.8	Site amplification factor at 1.0 second
PGA	0.396	MCE_G peak ground acceleration
F_{PGA}	1.204	Site amplification factor at PGA
PGA_M	0.477	Site modified peak ground acceleration
T_L	12	Long-period transition period in seconds
SsRT	0.916	Probabilistic risk-targeted ground motion. (0.2 second)
SsUH	0.991	Factored uniform-hazard (2% probability of exceedance in 50 years) spectral acceleration
SsD	1.5	Factored deterministic acceleration value. (0.2 second)
S1RT	0.329	Probabilistic risk-targeted ground motion. (1.0 second)
S1UH	0.356	Factored uniform-hazard (2% probability of exceedance in 50 years) spectral acceleration.
S1D	0.6	Factored deterministic acceleration value. (1.0 second)
PGAd	0.5	Factored deterministic acceleration value. (Peak Ground Acceleration)
C_{RS}	0.925	Mapped value of the risk coefficient at short periods
C_{R1}	0.922	Mapped value of the risk coefficient at a period of 1 s

DISCLAIMER

While the information presented on this website is believed to be correct, SEAOC /OSHPD and its sponsors and contributors assume no responsibility or liability for its accuracy. The material presented in this web application should not be used or relied upon for any specific application without competent examination and verification of its accuracy, suitability and applicability by engineers or other licensed professionals. SEAOC / OSHPD do not intend that the use of this information replace the sound judgment of such competent professionals, having experience and knowledge in the field of practice, nor to substitute for the standard of care required of such professionals in interpreting and applying the results of the seismic data provided by this website. Users of the information from this website assume all liability arising from such use. Use of the output of this website does not imply approval by the governing building code bodies responsible for building code approval and interpretation for the building site described by latitude/longitude location in the search results of this website.

U.S. Geological Survey - Earthquake Hazards Program

Unified Hazard Tool

Please do not use this tool to obtain ground motion parameter values for the design code reference documents covered by the U.S. Seismic Design Maps web tools (e.g., the International Building Code and the ASCE 7 or 41 Standard). The values returned by the two applications are not identical.

Input

Edition

Dynamic: Conterminous U.S. 2014 (u…

Spectral Period

Peak Ground Acceleration

Latitude

Decimal degrees

35.4007

Time Horizon

Return period in years

2475

Longitude

Decimal degrees, negative values for western longitudes

-118.93395

Site Class

259 m/s (Site class D)

Hazard Curve

Hazard Curves

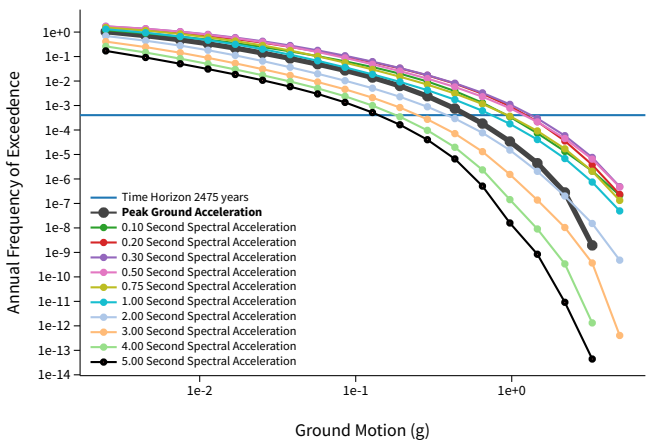

Uniform Hazard Response Spectrum

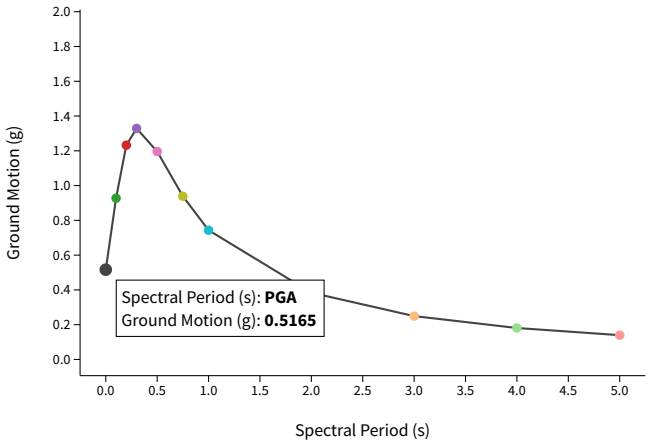

Component Curves for Peak Ground Acceleration

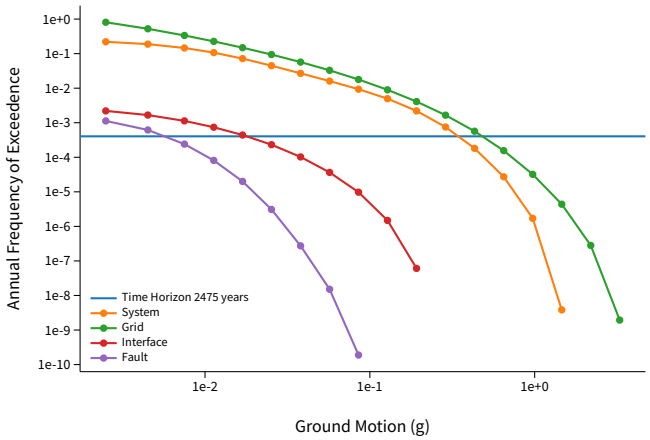

View Raw Data

Deaggregation

Component

Total

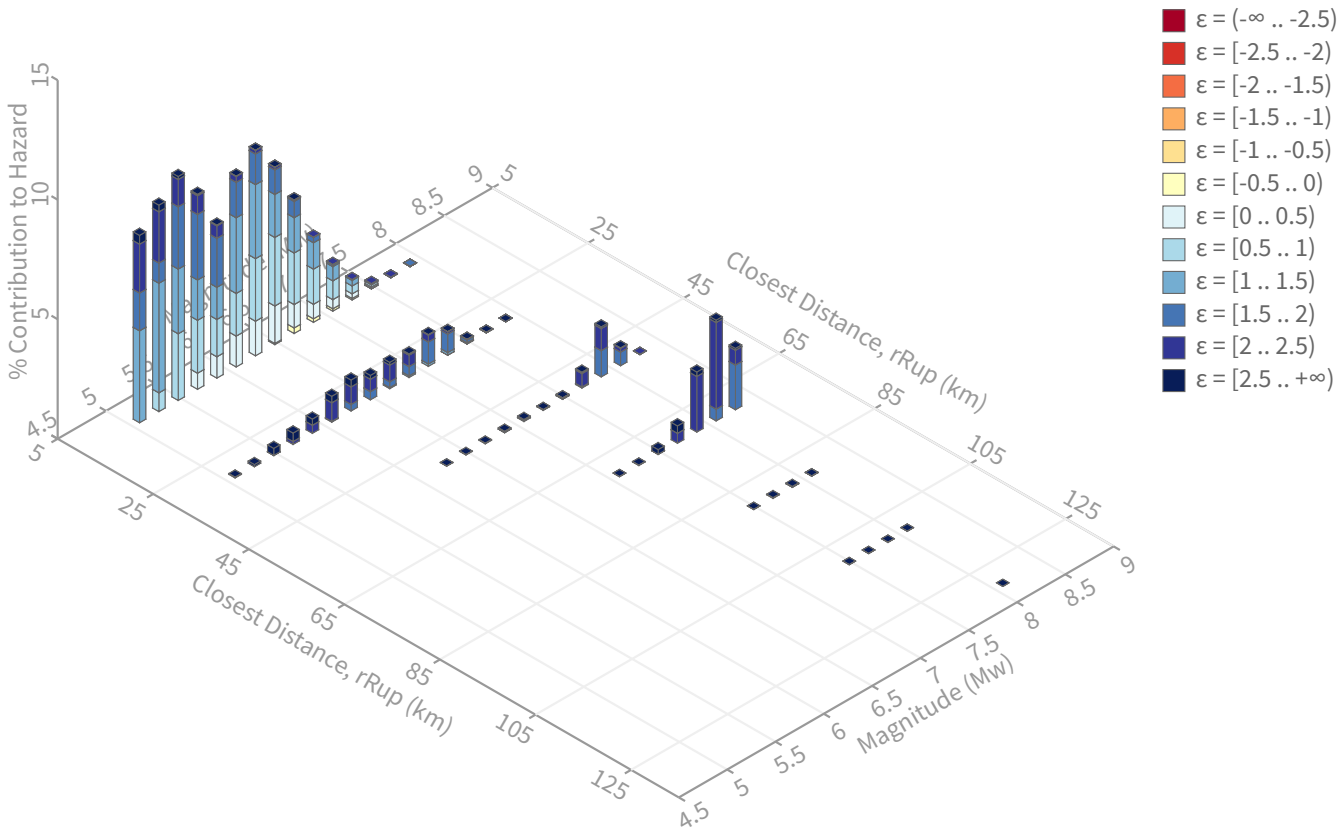

Summary statistics for, Deaggregation: Total

Deaggregation targets

Return period: 2475 yrs
Exceedance rate: 0.0004040404 yr^{-1}
PGA ground motion: 0.51645176 g

Recovered targets

Return period: 2813.946 yrs
Exceedance rate: 0.00035537285 yr^{-1}

Totals

Binned: 100 %
Residual: 0 %
Trace: 0.1 %

Mean (over all sources)

m: 6.3
r: 18.46 km
ε_0: 1.43 σ

Mode (largest m-r bin)

m: 5.5
r: 9.64 km
ε_0: 1.36 σ
Contribution: 9.36 %

Mode (largest m-r-ε_0 bin)

m: 5.29
r: 6.83 km
ε_0: 1.24 σ
Contribution: 4.58 %

Discretization

r: min = 0.0, max = 1000.0, Δ = 20.0 km
m: min = 4.4, max = 9.4, Δ = 0.2
ε: min = -3.0, max = 3.0, Δ = 0.5 σ

Epsilon keys

ε0: [-∞ .. -2.5)
ε1: [-2.5 .. -2.0)
ε2: [-2.0 .. -1.5)
ε3: [-1.5 .. -1.0)
ε4: [-1.0 .. -0.5)
ε5: [-0.5 .. 0.0)
ε6: [0.0 .. 0.5)
ε7: [0.5 .. 1.0)
ε8: [1.0 .. 1.5)
ε9: [1.5 .. 2.0)
ε10: [2.0 .. 2.5)
ε11: [2.5 .. +∞]

Deaggregation Contributors

Source Set ↳ Source	Type	r	m	ε_0	lon	lat	az	%
UC33brAvg_FM31 (opt)	Grid							41.84
PointSourceFinite: -118.934, 35.432		6.05	5.73	0.84	118.934°W	35.432°N	0.00	5.47
PointSourceFinite: -118.934, 35.432		6.05	5.73	0.84	118.934°W	35.432°N	0.00	5.44
PointSourceFinite: -118.934, 35.450		7.17	5.79	0.99	118.934°W	35.450°N	0.00	3.85
PointSourceFinite: -118.934, 35.450		7.17	5.79	0.99	118.934°W	35.450°N	0.00	3.85
PointSourceFinite: -118.934, 35.513		11.75	6.05	1.44	118.934°W	35.513°N	0.00	3.49
PointSourceFinite: -118.934, 35.513		11.75	6.05	1.44	118.934°W	35.513°N	0.00	3.47
PointSourceFinite: -118.934, 35.504		11.06	6.01	1.38	118.934°W	35.504°N	0.00	2.83
PointSourceFinite: -118.934, 35.504		11.06	6.01	1.38	118.934°W	35.504°N	0.00	2.82
PointSourceFinite: -118.934, 35.549		14.63	6.18	1.64	118.934°W	35.549°N	0.00	1.15
PointSourceFinite: -118.934, 35.549		14.63	6.18	1.64	118.934°W	35.549°N	0.00	1.14
UC33brAvg_FM32 (opt)	Grid							41.78
PointSourceFinite: -118.934, 35.432		6.05	5.73	0.84	118.934°W	35.432°N	0.00	5.46
PointSourceFinite: -118.934, 35.432		6.05	5.73	0.84	118.934°W	35.432°N	0.00	5.44
PointSourceFinite: -118.934, 35.450		7.17	5.79	0.99	118.934°W	35.450°N	0.00	3.85
PointSourceFinite: -118.934, 35.450		7.17	5.79	0.99	118.934°W	35.450°N	0.00	3.84
PointSourceFinite: -118.934, 35.513		11.75	6.05	1.44	118.934°W	35.513°N	0.00	3.48
PointSourceFinite: -118.934, 35.513		11.75	6.05	1.44	118.934°W	35.513°N	0.00	3.47
PointSourceFinite: -118.934, 35.504		11.06	6.01	1.38	118.934°W	35.504°N	0.00	2.82
PointSourceFinite: -118.934, 35.504		11.06	6.01	1.38	118.934°W	35.504°N	0.00	2.81
PointSourceFinite: -118.934, 35.549		14.63	6.18	1.64	118.934°W	35.549°N	0.00	1.15
PointSourceFinite: -118.934, 35.549		14.63	6.18	1.64	118.934°W	35.549°N	0.00	1.14
UC33brAvg_FM31	System							8.22
San Andreas (Big Bend) [4]		63.87	8.07	2.15	119.100°W	34.843°N	193.72	4.83
UC33brAvg_FM32	System							8.16
San Andreas (Big Bend) [4]		63.87	8.08	2.15	119.100°W	34.843°N	193.72	4.81

Appendix B

Boring Logs, Lake Isabella Flood Inundation Map, Flood Insurance Rate Map, Historical Depth To Water Map, LiquefyPro Plots and Calculation Sheets for Liquefaction and Settlement, Pipeline Survey Letter and Lab Results Table.

LOG OF TEST BORING
BORING B-1

PROJECT: *New Highland High School Swimming Pool*
BORING DATE: *3/30/22*
BORING LOCATION: *See Boring Location Map, Figure 1*
DRILL METHOD: *4.25" I.D. Hollow-Stem Auger*
DESCRIPTION: *Geotechnical Engineering Services*
DEPTH TO WATER - ▼ **:** *N/A* **CAVING -** ▰ **:** *N/A*

FILE NO: *18353*
ELEV.: *Approx 826'*
START: *3/30/22*
FINISH: *3/30/22*
LOGGER: *M.Watts*

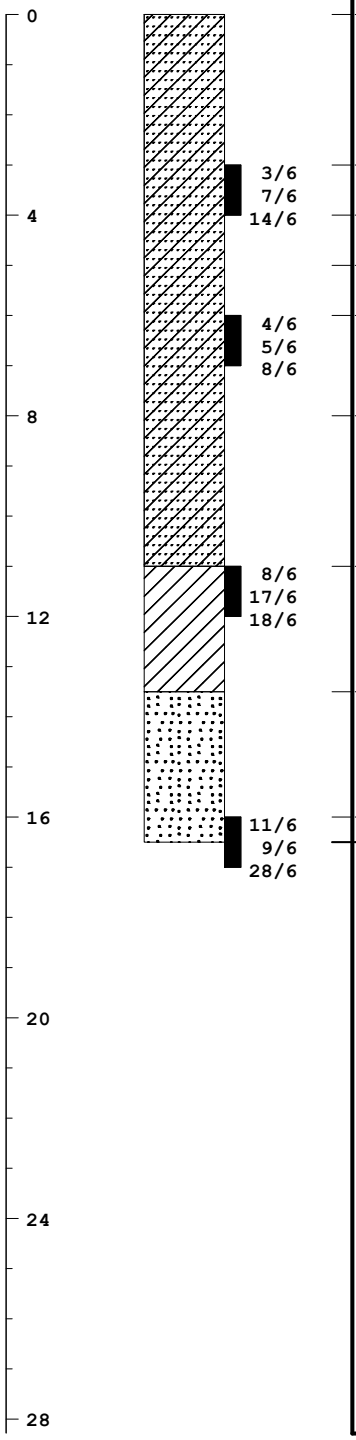

ELEVATION/ DEPTH (feet)	USCS	Description	Remarks	Density pcf	Moisture %
	SC	CLAYEY SAND: brown, damp, low to medium plasticity.			
		Medium dense.		122.3	12.4
4		Cobbles at 4'.			
		Dry to damp.			
		traces of gravel.		99.1	15.6
8		Cobbles at 8'.			
	CL	SANDY CLAY: red brown, damp to wet, hard, low plasticity, gravel.		99.6	12.7
12	SP	POORLY GRADED SAND: yellowish brown, dry, fine, cobbles/ gravel.	slow drilling due to cobbles.		
16		Dense.		101.9	6.4
		BOTTOM.			

Figure Number 2

LOG OF TEST BORING
BORING B-2

PROJECT: *New Highland High School Swimming Pool*
BORING DATE: *3/30/22*
BORING LOCATION: *See Boring Location Map, Figure 1*
DRILL METHOD: *4.25" I.D. Hollow-Stem Auger*
DESCRIPTION: *Geotechnical Engineering Services*
DEPTH TO WATER - ▼ : *N/A* **CAVING - ⬟ :** *N/A*

FILE NO: *18353*
ELEV.: *Approx 826'*
START: *3/30/22*
FINISH: *3/30/22*
LOGGER: *M.Watts*

ELEVATION/ DEPTH (feet)	SOIL SYMBOLS SAMPLER SYMBOLS AND FIELD TEST DATA	USCS	Description	Remarks	Density pcf	Moisture %
0		SC	CLAYEY SAND: brown, dry to damp, low plasticity, rock/ gravel, tree roots.			
4						
8			Damp, low to medium plasticity.			
			Cobbles at 9'.			
			Dry, light brown.			
12			Slow hard drilling due to cobbles.			
		SP	POORLY GRADED SAND: yellowish brown, dry, fine, cobbles/ gravel.			
16			BOTTOM.			
20						
24						
28						

Figure Number 3

LOG OF TEST BORING
BORING B-3

PROJECT: *New Highland High School Swimming Pool*
BORING DATE: *3/30/22*
BORING LOCATION: *See Boring Location Map, Figure 1*
DRILL METHOD: *4.25" I.D. Hollow-Stem Auger*
DESCRIPTION: *Geotechnical Engineering Services*
DEPTH TO WATER - ▼ **:** *N/A* **CAVING -** ▰ **:** *N/A*

FILE NO: *18353*
ELEV.: *Approx 826'*
START: *3/30/22*
FINISH: *3/30/22*
LOGGER: *M.Watts*

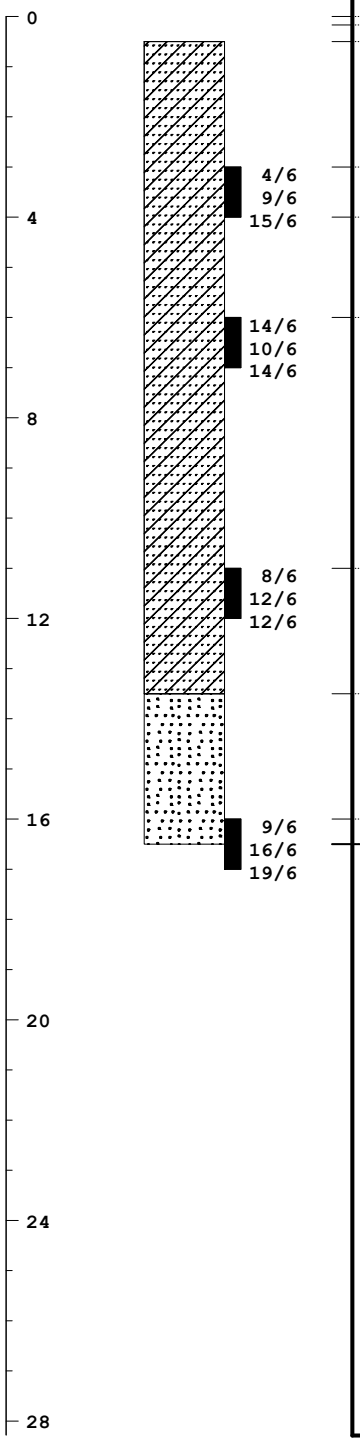

ELEVATION/ DEPTH (feet)	USCS	Description	Remarks	Density pcf	Moisture %
0		2" Asphaltic Concrete.			
	SC	4" aggregate base			
		CLAYEY SAND: red brown, damp, low to medium plasticity, gravel.		114.7	10.3
4		Very stiff, gravel. Cobbles at 4'.			
		Very stiff, medium plasticity.		119.5	13.8
8					
		SANDY CLAY: red brown, damp to wet, low plasticity.		109.9	14.7
12	SP	POORLY GRADED SAND: yellowish brown, dry, fine to medium, gravel/cobbles.			
16		Dense, gravel, cobbles.	gravel and cobbles at 14'.	112.7	1.7
		BOTTOM.			
20					
24					
28					

Figure Number 4

LOG OF TEST BORING
BORING B-4

PROJECT: *New Highland High School Swimming Pool*
BORING DATE: *3/30/22*
BORING LOCATION: *See Boring Location Map, Figure 1*
DRILL METHOD: *4.25" I.D. Hollow-Stem Auger*
DESCRIPTION: *Geotechnical Engineering Services*
DEPTH TO WATER - ▼ : *N/A* **CAVING - ▰ :** *N/A*

FILE NO: *18353*
ELEV.: *Approx 826'*
START: *3/30/22*
FINISH: *3/30/22*
LOGGER: *M.Watts*

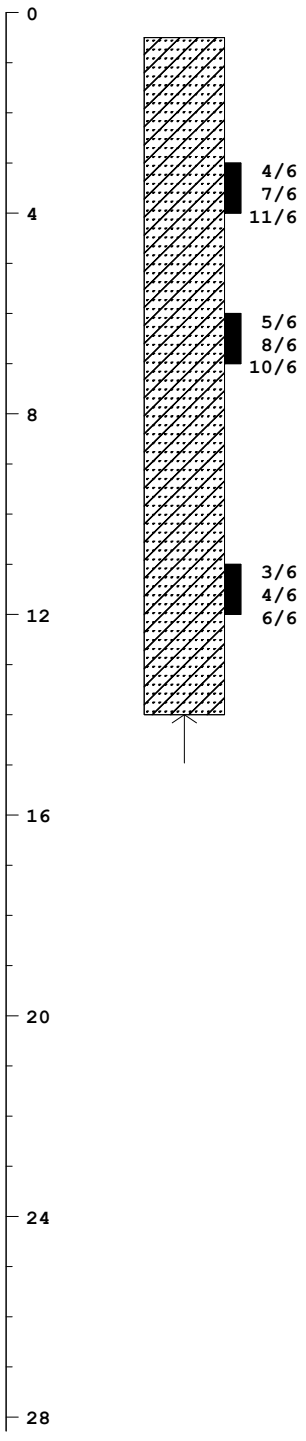

ELEVATION/ DEPTH (feet)	SOIL SYMBOLS SAMPLER SYMBOLS AND FIELD TEST DATA	USCS	Description	Remarks	Density pcf	Moisture %
			2" of Asphaltic Concrete.			
		SC	4" of Aggregate Base.			
			CLAYEY SAND: brown, damp, low to medium plasticity, gravel.			
			Very stiff, gravel.		108.2	13.2
					116.5	13.8
			SILTY SANDY CLAY: light reddish brown. dry, stiff, low plasticity.		100.1	13.6
			Tight drilling, refusal at 14'.			
			BOTTOM.			

Figure Number 5

LOG OF TEST BORING
BORING B-5

PROJECT: *New Highland High School Swimming Pool*
BORING DATE: *4/11/22*
BORING LOCATION: *See Boring Location Map, Figure 1*
DRILL METHOD: *4.25" I.D. Hollow-Stem Auger*
DESCRIPTION: *Geotechnical Engineering Services*
DEPTH TO WATER - ▼ **:** *N/A* **CAVING -** ▰ **:** *N/A*

FILE NO: *18353*
ELEV.: *Approx 826'*
START: *4/11/22*
FINISH: *4/11/22*
LOGGER: *M.Watts*

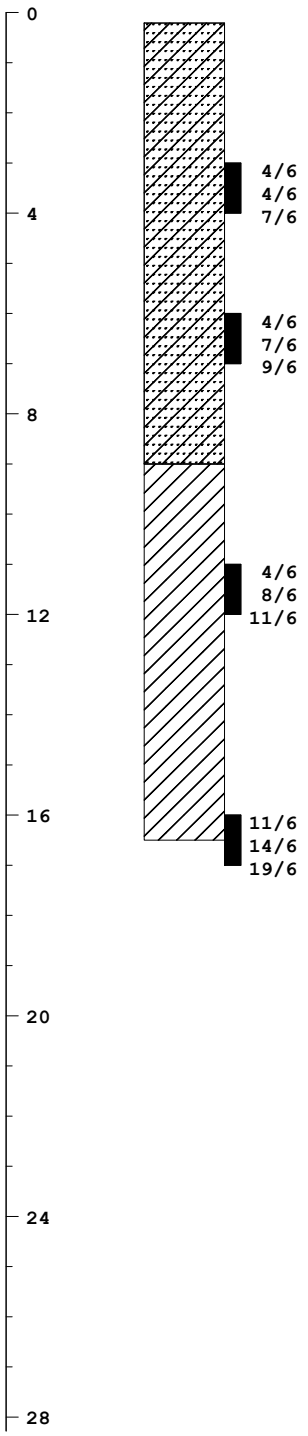

ELEVATION/ DEPTH (feet)	USCS	Description	Remarks	Density pcf	Moisture %
0	SC	2.5" of Asphaltic Concrete. CLAYEY SAND: red brown, moist, fine grained sand.			
4		Stiff.		109.7	17.9
8		Very stiff.		108.4	21.9
	CL	SANDY CLAY: red brown, medium dense, moist, cohesive.			
12		Very stiff, traces of fine grained sand with gravel.		106.4	13.9
16		Hard.		122.5	10.4
		BOTTOM.			

Figure Number 6

LOG OF TEST BORING
BORING B-6

PROJECT: *New Highland High School Swimming Pool*
BORING DATE: *4/4/22*
BORING LOCATION: *See Boring Location Map, Figure 1*
DRILL METHOD: *4.25" I.D. Hollow-Stem Auger*
DESCRIPTION: *Geotechnical Engineering Services*
DEPTH TO WATER - ▽ **:** *N/A* **CAVING -** ▰ **:** *N/A*

FILE NO: *18353*
ELEV.: *Approx 826'*
START: *4/4/22*
FINISH: *4/4/22*
LOGGER: *M.Watts*

ELEVATION/ DEPTH (feet)	SOIL SYMBOLS SAMPLER SYMBOLS AND FIELD TEST DATA	USCS	Description	Remarks	Density pcf	Moisture %
0		GM	2" of Asphaltic Concrete.			
		SC	4" of Aggregate Base.			
	3/6 5/6 6/6		CLAYEY SAND: red brown, medium to high plasticity, gravel.		120.5	14.5
4			Medium dense.			
	6/6 10/6 12/6				107.7	18.4
			Light red brown.			
8			BOTTOM	Refusal at 8'.		
12						
16						
20						
24						
28						

Figure Number 7

LOG OF TEST BORING
BORING B-7

PROJECT: *New Highland High School Swimming Pool*
BORING DATE: *4/4/22*
BORING LOCATION: *See Boring Location Map, Figure 1*
DRILL METHOD: *4.25" I.D. Hollow-Stem Auger*
DESCRIPTION: *Geotechnical Engineering Services*
DEPTH TO WATER - ▼ **:** *N/A* **CAVING -** ▰ **:** *N/A*

FILE NO: *18353*
ELEV.: *Approx 826'*
START: *4/4/22*
FINISH: *4/4/22*
LOGGER: *M.Watts*

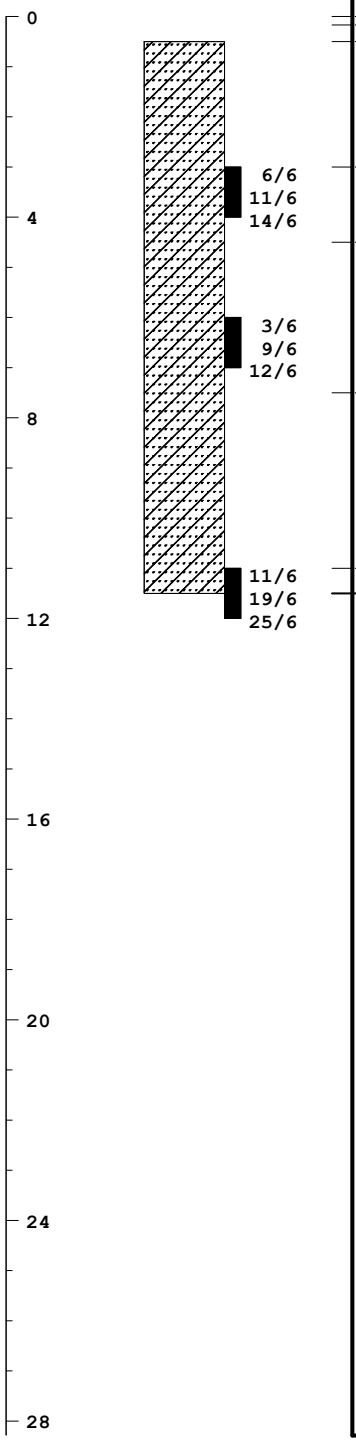

ELEVATION/ DEPTH (feet)	USCS	Description	Remarks	Density pcf	Moisture %
0		2" of Asphaltic Concrete.			
	SC	4" of Aggregate Base.			
		CLAYEY SAND: light reddish brown, dry to damp, low plasticity, gravel.		120.0	13.4
4		Very stiff. red brown, damp, low to medium plasticity.		121.5	12.4
8		Tight drilling.			
12		Hard.		117.7	14.0
		BOTTOM. Refusal due to tight drilling at 11'.			

Figure Number 8

LOG OF TEST BORING
BORING B-8

PROJECT: *New Highland High School Swimming Pool*
BORING DATE: *4/4/22*
BORING LOCATION: *See Boring Location Map, Figure 1*
DRILL METHOD: *4.25" I.D. Hollow-Stem Auger*
DESCRIPTION: *Geotechnical Engineering Services*
DEPTH TO WATER - : *N/A*
CAVING - : *N/A*

FILE NO: *18353*
ELEV.: *Approx 826'*
START: *4/4/22*
FINISH: *4/4/22*
LOGGER: *M.Watts*

ELEVATION/ DEPTH (feet)	SOIL SYMBOLS SAMPLER SYMBOLS AND FIELD TEST DATA	USCS	Description	Remarks	Density pcf	Moisture %
0			2" of Asphaltic Concrete.			
		SC	4" of Aggregate Base.			
			CLAYEY SAND: light red brown, low plasticity, traces of gravel.			
4			Clay, red brown, damp, low to medium plasticity.			
8						
		SC	CLAYEY SAND: red brown, dry to damp, fine, traces of gravel.			
12			POORLY GRADED SAND: light red brown, dry, fine to medium, gravel.	Hard drilling gravel at 11'.		
			BOTTOM.			
16						
20						
24						
28						

Figure Number 9

LOG OF TEST BORING
BORING B-9

PROJECT: *New Highland High School Swimming Pool*
BORING DATE: *4/4/22*
BORING LOCATION: *See Boring Location Map, Figure 1*
DRILL METHOD: *4.25" I.D. Hollow-Stem Auger*
DESCRIPTION: *Geotechnical Engineering Services*
DEPTH TO WATER - ▼ **:** *N/A* **CAVING -** ▰ **:** *N/A*

FILE NO: *18353*
ELEV.: *Approx 826'*
START: *4/4/22*
FINISH: *4/4/22*
LOGGER: *M.Watts*

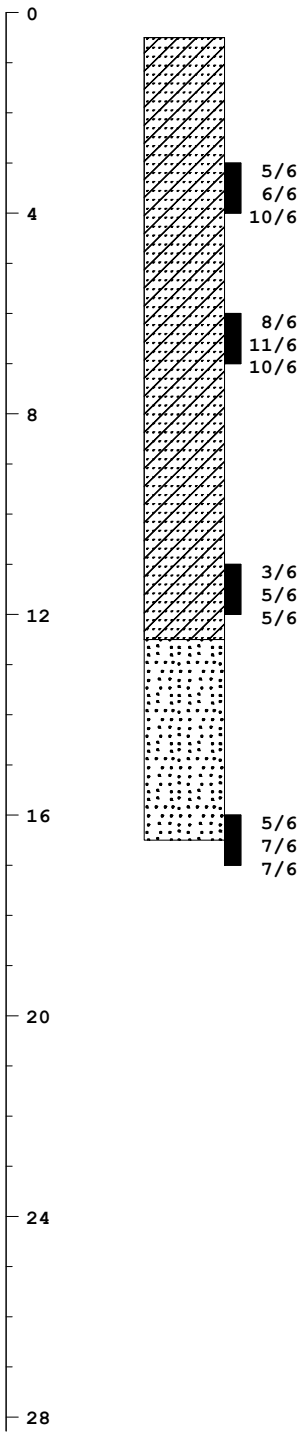

ELEVATION/ DEPTH (feet)	USCS	Description	Remarks	Density pcf	Moisture %
		2" of Asphaltic Concrete.			
	SC	4" of Aggregate Base.			
		CLAYEY SAND: red brown, dry to damp, low to medium plasticity.		109.5	14.2
		Stiff.			
		Very stiff gravel.		119.4	12.0
	SC	CLAYEY SAND: red brown, dry to damp, fine, gravel.		119.4	12.0
		Loose.			
	SP	POORLY GRADED SAND: light reddish brown, dry, fine to medium, gravel. Slow drilling, gravel.			
		Medium dense.		107.7	3.1
		BOTTOM.			

Figure Number 10

LOG OF TEST BORING
BORING B-10

PROJECT: *New Highland High School Swimming Pool*
BORING DATE: *4/11/22*
BORING LOCATION: *See Boring Location Map, Figure 1*
DRILL METHOD: *4.25" I.D. Hollow-Stem Auger*
DESCRIPTION: *Geotechnical Engineering Services*
DEPTH TO WATER - ▽ **:** *N/A* **CAVING -** ▰ **:** *N/A*

FILE NO: *18353*
ELEV.: *Approx 826'*
START: *411/22*
FINISH: *4/11/22*
LOGGER: *L.Winder*

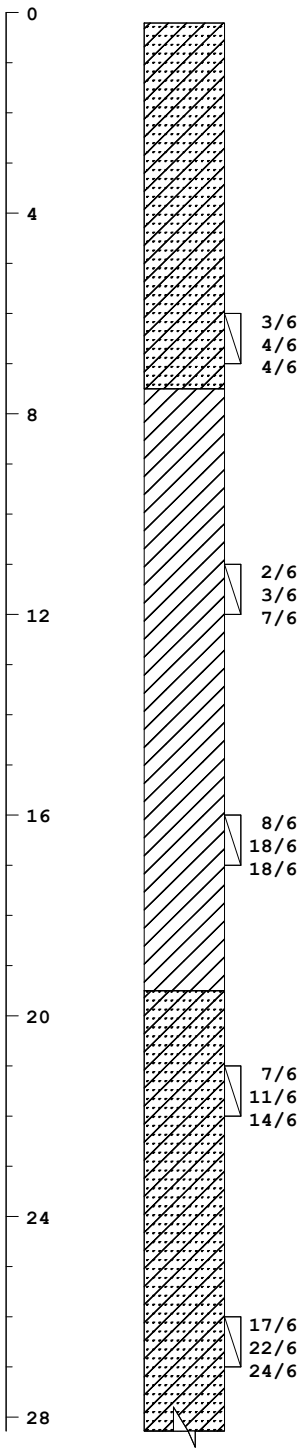

ELEVATION/ DEPTH (feet)	USCS	Description	Remarks	Density pcf	Moisture %
0	SC	2.5" of Asphaltic Concrete (blacktop).			
		CLAYEY SAND: damp, medium plasticity, reddish brown, traces of fine grained sand.			
4					
					14.3
8	CL	SANDY CLAY: reddish brown, moist, cohesive.			
		Stiff.			12.5
12					
16		Hard.			7.5
	CL	SANDY CLAY: light reddish brown, dry to damp, low plasticity, cohesive.			
20	SC	CLAYEY SAND: light reddish brown, low plasticity, damp,			
	SC	cohesive.			9.2
		Medium dense.			
		Gravel starting at 22'.			
24	SC	CLAYEY SAND: light yellowish brown, dry, fine, cohesive, traces of silt.			
		Dense.	Cobbles starting at 25'.		3.5
28					

Figure Number 11

LOG OF TEST BORING
BORING B-10

PROJECT: *New Highland High School Swimming Pool*
BORING DATE: *4/11/22*
BORING LOCATION: *See Boring Location Map, Figure 1*
DRILL METHOD: *4.25" I.D. Hollow-Stem Auger*
DESCRIPTION: *Geotechnical Engineering Services*
DEPTH TO WATER - ▽ : *N/A* **CAVING - ▰ :** *N/A*

FILE NO: *18353*
ELEV.: *Approx 826'*
START: *411/22*
FINISH: *4/11/22*
LOGGER: *L.Winder*

ELEVATION/ DEPTH (feet)	SOIL SYMBOLS SAMPLER SYMBOLS AND FIELD TEST DATA	USCS	Description	Remarks	Density pcf	Moisture %
32	20/6 28/6 24/6					3.4
36	36/6 50/2		Sampler advanced 2" on 50 blows due to cobbles.			2.7
40		SP	POORLY GRADED SAND WITH CLAY: light yellowish brown, fine grained, gravel, damp, traces of silt.			
	10/6 16/6 32/6	SP-SM	Dense.			3.3
44						
	12/6 27/6 21/6					3.8
48						
	14/6 50/4		Sampler advanced 4" on 50 blows due to cobbles.			3.6
52			BOTTOM.			
56						

Figure Number 11

KEY TO SYMBOLS

Symbol	Description
Strata symbols	
	Clayey sand
	Low plasticity clay
	Poorly graded sand
	Paving
	Silty gravel
Misc. Symbols	
	Drill rejection
	Boring continues
Soil Samplers	
	California sampler
	No recovery

Notes:

1. Ten (10) exploratory borings were drilled between 03/30/2022 and 04/11/2022 using an 8-inch outside diameter hollow-stem auger.

2. No free groundwater was encountered to the maximum depth drilled of 51'.

3. Boring locations are shown on the Boring Location Map, Figure 1.

4. These logs are subject to the limitations, conclusions, and recommendations in this report.

5. Results of tests conducted on samples recovered are reported on the logs.

N

National Flood Hazard Layer FIRMette



Legend

SEE FIS REPORT FOR DETAILED LEGEND AND INDEX MAP FOR FIRM PANEL LAYOUT

- SPECIAL FLOOD HAZARD AREAS
  - Without Base Flood Elevation (BFE) Zone A, V, A99
  - With BFE or Depth Zone AE, AO, AH, VE, AR
  - Regulatory Floodway
- OTHER AREAS OF FLOOD HAZARD
  - 0.2% Annual Chance Flood Hazard, Areas of 1% annual chance flood with average depth less than one foot or with drainage areas of less than one square mile Zone X
  - Future Conditions 1% Annual Chance Flood Hazard Zone X
  - Area with Reduced Flood Risk due to Levee. See Notes. Zone X
  - Area with Flood Risk due to Levee Zone D
- OTHER AREAS
  - NO SCREEN Area of Minimal Flood Hazard Zone X
  - Effective LOMRs
  - Area of Undetermined Flood Hazard Zone D
- GENERAL STRUCTURES
  - Channel, Culvert, or Storm Sewer
  - Levee, Dike, or Floodwall
- OTHER FEATURES
  - 20.2 Cross Sections with 1% Annual Chance
  - 17.5 Water Surface Elevation
  - Coastal Transect
  - Base Flood Elevation Line (BFE)
  - Limit of Study
  - Jurisdiction Boundary
  - Coastal Transect Baseline
  - Profile Baseline
  - Hydrographic Feature
- MAP PANELS
  - Digital Data Available
  - No Digital Data Available
  - Unmapped

The pin displayed on the map is an approximate point selected by the user and does not represent an authoritative property location.

This map complies with FEMA's standards for the use of digital flood maps if it is not void as described below. The basemap shown complies with FEMA's basemap accuracy standards

The flood hazard information is derived directly from the authoritative NFHL web services provided by FEMA. This map was exported on 10/7/2022 at 2:02 PM and does not reflect changes or amendments subsequent to this date and time. The NFHL and effective information may change or become superseded by new data over time.

This map image is void if the one or more of the following map elements do not appear: basemap imagery, flood zone labels, legend, scale bar, map creation date, community identifiers, FIRM panel number, and FIRM effective date. Map images for unmapped and unmodernized areas cannot be used for regulatory purposes.

SOILS ENGINEERING, INC.
4400 Yeager Way
Bakersfield, CA 93313
(661) 831 - 5100

DATE: 10/22
PROJECT: #18353

New Highland High School Swimming Pool
2900 Royal Scots Way
Bakersfield, CA

FEMA Flood Insurance Rate Map

PLATE

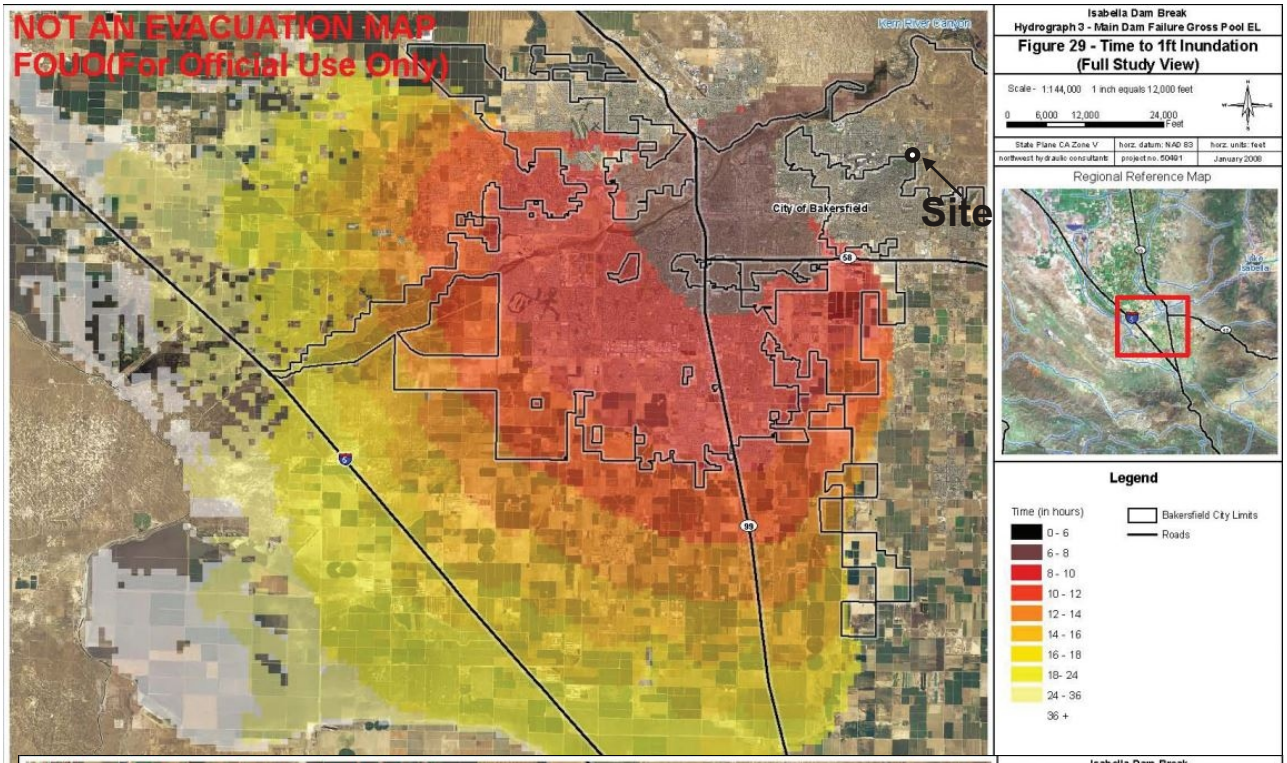

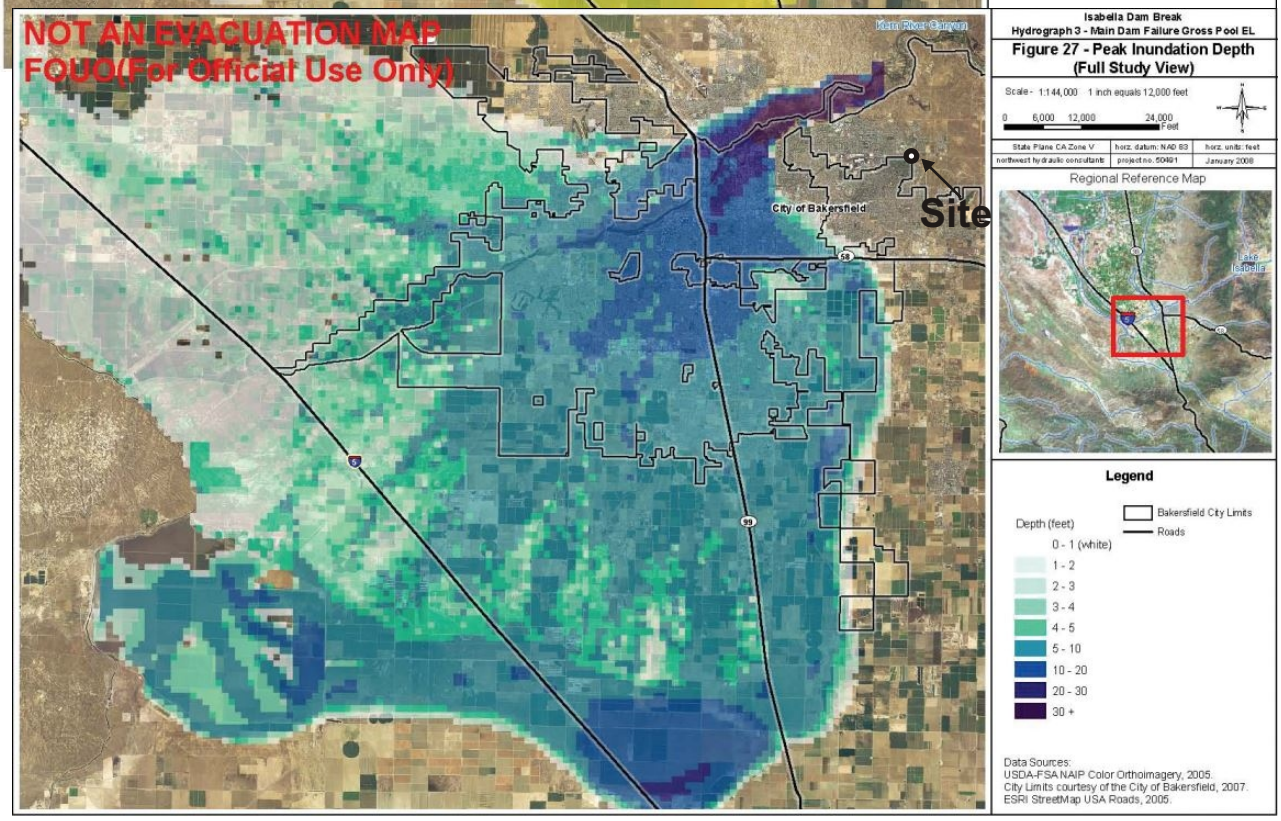

Source: Kern County Map Info System, US Army Corps of Engineers Preliminary Flood Results

SOILS ENGINEERING, INC. **4400 Yeager Way** **Bakersfield, CA 93313** **(661) 831 - 5100** DATE: 10/22 PROJECT: #18353	**New Highland High School Swimming Pool** **2900 Royal Scots Way** **Bakersfield, CA** **Lake Isabella Dam Inundation Maps**	**PLATE**

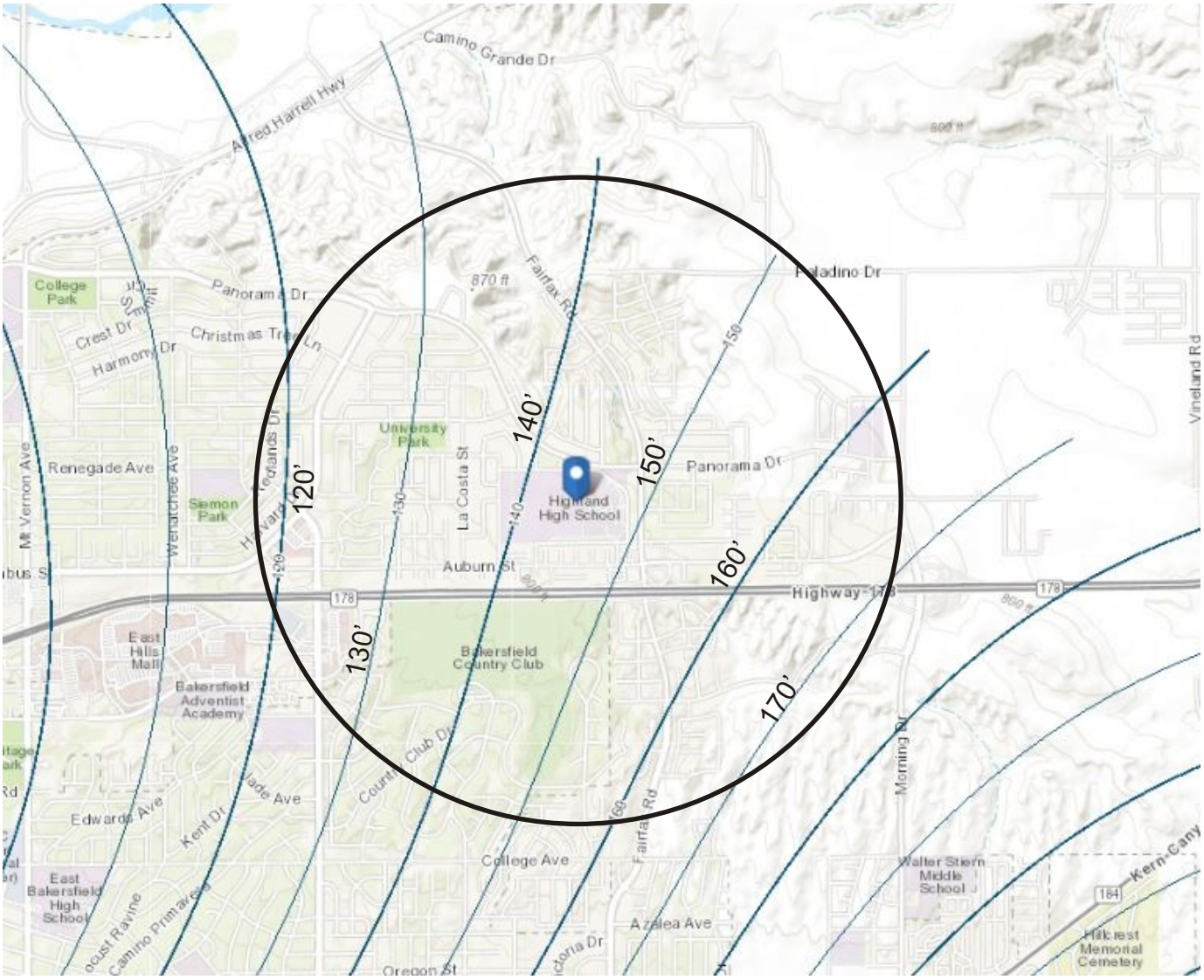

Date: Spring 2019

0 **Approx. Scale** **1.0 mile**

DWR, SGMA Data Viewer: Shallowest Depth to Water Available

SOILS ENGINEERING, INC. **4400 Yeager Way** **Bakersfield, CA 93313** **(661) 831-5100** DATE: 8/22 PROJECT: #18503	**FSD Proposed School Site #5** **SW of S. Oswell St. and Zephyr Lane** **Bakersfield, CA** **Historical Depth To Water Map**	**PLATE**

LIQUEFACTION ANALYSIS

Highland HS Swimming Pool

Hole No.=B-10 Water Depth=100 ft

Magnitude=6.3
Acceleration=0.477g

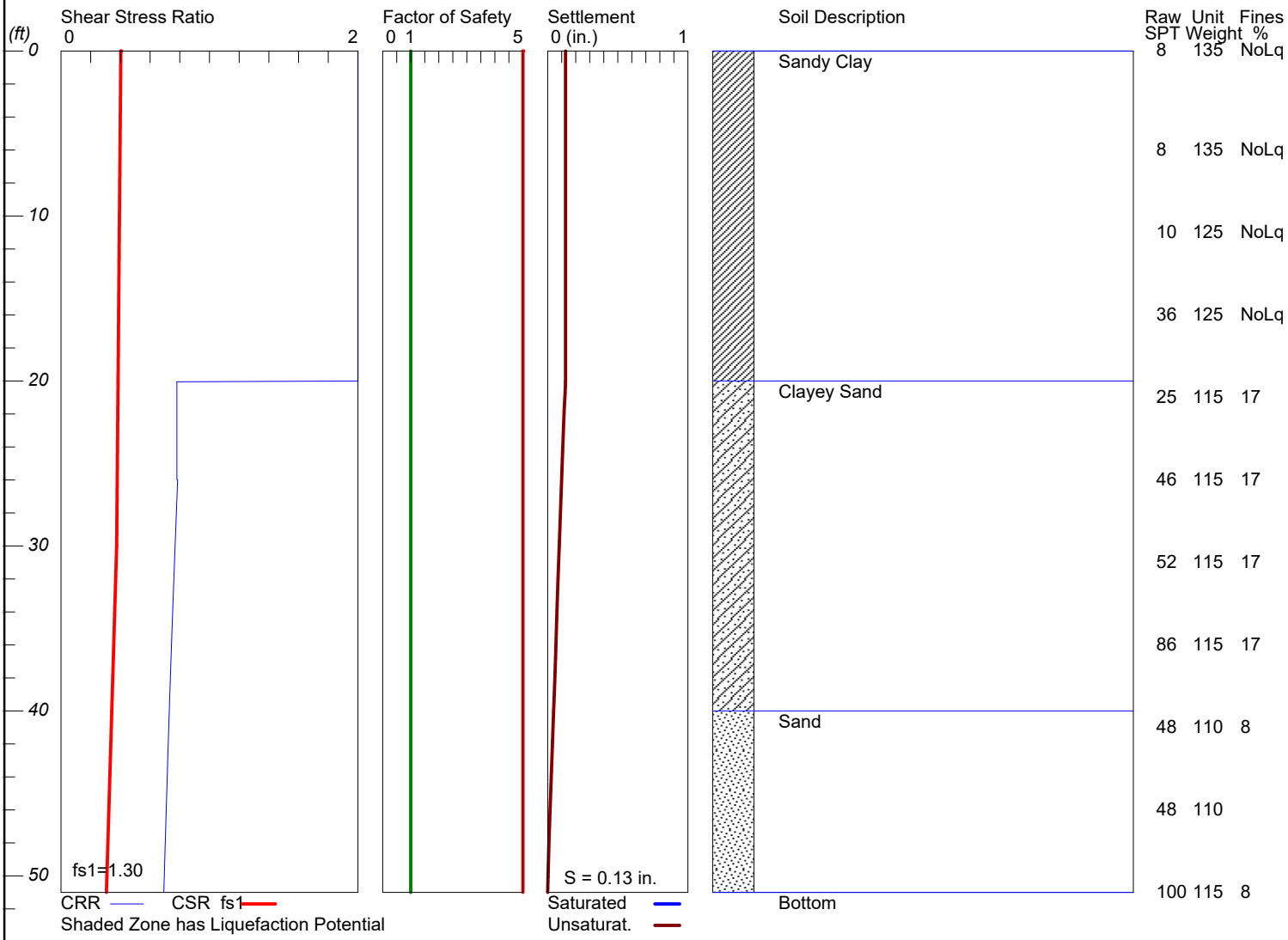

LiquefyPro CivilTech Software USA www.civiltech.com

****
****
LIQUEFACTION ANALYSIS SUMMARY
Copyright by CivilTech Software
www.civiltech.com
****
****

Font: Courier New, Regular, Size 8 is recommended for this report.
Licensed to , 4/19/2022 2:31:25 PM

Input File Name: O:\b. PROJECT FILES (ACTIVE)\18300-18399\18353 KHSD, Highland HS Swimming Pool GEOTECH\OFFICE REPORTS\Seismic\LiquefyPro Files\18353 LiquefyPro B-10.liq
Title: Highland HS Swimming Pool
Subtitle: 18353

Surface Elev.=
Hole No.=B-10
Depth of Hole= 51.00 ft
Water Table during Earthquake= 100.00 ft
Water Table during In-Situ Testing= 100.00 ft
Max. Acceleration= 0.48 g
Earthquake Magnitude= 6.30

Input Data:
Surface Elev.=
Hole No.=B-10
Depth of Hole=51.00 ft
Water Table during Earthquake= 100.00 ft
Water Table during In-Situ Testing= 100.00 ft
Max. Acceleration=0.48 g
Earthquake Magnitude=6.30
No-Liquefiable Soils: CL, OL are Non-Liq. Soil

1. SPT or BPT Calculation.
2. Settlement Analysis Method: Tokimatsu, M-correction
3. Fines Correction for Liquefaction: Modify Stark/Olson
4. Fine Correction for Settlement: During Liquefaction*
5. Settlement Calculation in: All zones*
6. Hammer Energy Ratio, Ce = 1.25
7. Borehole Diameter, Cb= 1
8. Sampling Method, Cs= 1.2
9. User request factor of safety (apply to CSR) , User= 1.3
   Plot one CSR curve (fs1=User)
10. Use Curve Smoothing: Yes*
* Re

commended Options

In-Situ Test Data:

Depth ft	SPT	gamma pcf	Fines %
0.00	8.00	135.00	NoLiq
6.00	8.00	135.00	NoLiq
11.00	10.00	125.00	NoLiq
16.00	36.00	125.00	NoLiq
21.00	25.00	115.00	17.00
26.00	46.00	115.00	17.00
31.00	52.00	115.00	17.00
36.00	86.00	115.00	17.00
41.00	48.00	110.00	8.00
46.00	48.00	110.00	8.00
51.00	100.0	115.00	8.00

Output Results:

Settlement of Saturated Sands=0.00 in.
Settlement of Unsaturated Sands=0.13 in.
Total Settlement of Saturated and Unsaturated Sands=0.13 in.
Differential Settlement=0.064 to 0.084 in.

Depth ft	CRRm	CSRfs	F.S.	S_sat. in.	S_dry in.	S_all in.
0.00	2.00	0.40	5.00	0.00	0.13	0.13
0.05	2.00	0.40	5.00	0.00	0.13	0.13
0.10	2.00	0.40	5.00	0.00	0.13	0.13
0.15	2.00	0.40	5.00	0.00	0.13	0.13
0.20	2.00	0.40	5.00	0.00	0.13	0.13
0.25	2.00	0.40	5.00	0.00	0.13	0.13
0.30	2.00	0.40	5.00	0.00	0.13	0.13
0.35	2.00	0.40	5.00	0.00	0.13	0.13
0.40	2.00	0.40	5.00	0.00	0.13	0.13
0.45	2.00	0.40	5.00	0.00	0.13	0.13
0.50	2.00	0.40	5.00	0.00	0.13	0.13
0.55	2.00	0.40	5.00	0.00	0.13	0.13
0.60	2.00	0.40	5.00	0.00	0.13	0.13
0.65	2.00	0.40	5.00	0.00	0.13	0.13
0.70	2.00	0.40	5.00	0.00	0.13	0.13
0.75	2.00	0.40	5.00	0.00	0.13	0.13
0.80	2.00	0.40	5.00	0.00	0.13	0.13
0.85	2.00	0.40	5.00	0.00	0.13	0.13
0.90	2.00	0.40	5.00	0.00	0.13	0.13
0.95	2.00	0.40	5.00	0.00	0.13	0.13
1.00	2.00	0.40	5.00	0.00	0.13	0.13
1.05	2.00	0.40	5.00	0.00	0.13	0.13
1.10	2.00	0.40	5.00	0.00	0.13	0.13
1.15	2.00	0.40	5.00	0.00	0.13	0.13
1.20	2.00	0.40	5.00	0.00	0.13	0.13
1.25	2.00	0.40	5.00	0.00	0.13	0.13

1.30	2.00	0.40	5.00	0.00	0.13	0.13
1.35	2.00	0.40	5.00	0.00	0.13	0.13
1.40	2.00	0.40	5.00	0.00	0.13	0.13
1.45	2.00	0.40	5.00	0.00	0.13	0.13
1.50	2.00	0.40	5.00	0.00	0.13	0.13
1.55	2.00	0.40	5.00	0.00	0.13	0.13
1.60	2.00	0.40	5.00	0.00	0.13	0.13
1.65	2.00	0.40	5.00	0.00	0.13	0.13
1.70	2.00	0.40	5.00	0.00	0.13	0.13
1.75	2.00	0.40	5.00	0.00	0.13	0.13
1.80	2.00	0.40	5.00	0.00	0.13	0.13
1.85	2.00	0.40	5.00	0.00	0.13	0.13
1.90	2.00	0.40	5.00	0.00	0.13	0.13
1.95	2.00	0.40	5.00	0.00	0.13	0.13
2.00	2.00	0.40	5.00	0.00	0.13	0.13
2.05	2.00	0.40	5.00	0.00	0.13	0.13
2.10	2.00	0.40	5.00	0.00	0.13	0.13
2.15	2.00	0.40	5.00	0.00	0.13	0.13
2.20	2.00	0.40	5.00	0.00	0.13	0.13
2.25	2.00	0.40	5.00	0.00	0.13	0.13
2.30	2.00	0.40	5.00	0.00	0.13	0.13
2.35	2.00	0.40	5.00	0.00	0.13	0.13
2.40	2.00	0.40	5.00	0.00	0.13	0.13
2.45	2.00	0.40	5.00	0.00	0.13	0.13
2.50	2.00	0.40	5.00	0.00	0.13	0.13
2.55	2.00	0.40	5.00	0.00	0.13	0.13
2.60	2.00	0.40	5.00	0.00	0.13	0.13
2.65	2.00	0.40	5.00	0.00	0.13	0.13
2.70	2.00	0.40	5.00	0.00	0.13	0.13
2.75	2.00	0.40	5.00	0.00	0.13	0.13
2.80	2.00	0.40	5.00	0.00	0.13	0.13
2.85	2.00	0.40	5.00	0.00	0.13	0.13
2.90	2.00	0.40	5.00	0.00	0.13	0.13
2.95	2.00	0.40	5.00	0.00	0.13	0.13
3.00	2.00	0.40	5.00	0.00	0.13	0.13
3.05	2.00	0.40	5.00	0.00	0.13	0.13
3.10	2.00	0.40	5.00	0.00	0.13	0.13
3.15	2.00	0.40	5.00	0.00	0.13	0.13
3.20	2.00	0.40	5.00	0.00	0.13	0.13
3.25	2.00	0.40	5.00	0.00	0.13	0.13
3.30	2.00	0.40	5.00	0.00	0.13	0.13
3.35	2.00	0.40	5.00	0.00	0.13	0.13
3.40	2.00	0.40	5.00	0.00	0.13	0.13
3.45	2.00	0.40	5.00	0.00	0.13	0.13
3.50	2.00	0.40	5.00	0.00	0.13	0.13
3.55	2.00	0.40	5.00	0.00	0.13	0.13
3.60	2.00	0.40	5.00	0.00	0.13	0.13
3.65	2.00	0.40	5.00	0.00	0.13	0.13
3.70	2.00	0.40	5.00	0.00	0.13	0.13
3.75	2.00	0.40	5.00	0.00	0.13	0.13
3.80	2.00	0.40	5.00	0.00	0.13	0.13
3.85	2.00	0.40	5.00	0.00	0.13	0.13
3.90	2.00	0.40	5.00	0.00	0.13	0.13
3.95	2.00	0.40	5.00	0.00	0.13	0.13

4.00	2.00	0.40	5.00	0.00	0.13	0.13
4.05	2.00	0.40	5.00	0.00	0.13	0.13
4.10	2.00	0.40	5.00	0.00	0.13	0.13
4.15	2.00	0.40	5.00	0.00	0.13	0.13
4.20	2.00	0.40	5.00	0.00	0.13	0.13
4.25	2.00	0.40	5.00	0.00	0.13	0.13
4.30	2.00	0.40	5.00	0.00	0.13	0.13
4.35	2.00	0.40	5.00	0.00	0.13	0.13
4.40	2.00	0.40	5.00	0.00	0.13	0.13
4.45	2.00	0.40	5.00	0.00	0.13	0.13
4.50	2.00	0.40	5.00	0.00	0.13	0.13
4.55	2.00	0.40	5.00	0.00	0.13	0.13
4.60	2.00	0.40	5.00	0.00	0.13	0.13
4.65	2.00	0.40	5.00	0.00	0.13	0.13
4.70	2.00	0.40	5.00	0.00	0.13	0.13
4.75	2.00	0.40	5.00	0.00	0.13	0.13
4.80	2.00	0.40	5.00	0.00	0.13	0.13
4.85	2.00	0.40	5.00	0.00	0.13	0.13
4.90	2.00	0.40	5.00	0.00	0.13	0.13
4.95	2.00	0.40	5.00	0.00	0.13	0.13
5.00	2.00	0.40	5.00	0.00	0.13	0.13
5.05	2.00	0.40	5.00	0.00	0.13	0.13
5.10	2.00	0.40	5.00	0.00	0.13	0.13
5.15	2.00	0.40	5.00	0.00	0.13	0.13
5.20	2.00	0.40	5.00	0.00	0.13	0.13
5.25	2.00	0.40	5.00	0.00	0.13	0.13
5.30	2.00	0.40	5.00	0.00	0.13	0.13
5.35	2.00	0.40	5.00	0.00	0.13	0.13
5.40	2.00	0.40	5.00	0.00	0.13	0.13
5.45	2.00	0.40	5.00	0.00	0.13	0.13
5.50	2.00	0.40	5.00	0.00	0.13	0.13
5.55	2.00	0.40	5.00	0.00	0.13	0.13
5.60	2.00	0.40	5.00	0.00	0.13	0.13
5.65	2.00	0.40	5.00	0.00	0.13	0.13
5.70	2.00	0.40	5.00	0.00	0.13	0.13
5.75	2.00	0.40	5.00	0.00	0.13	0.13
5.80	2.00	0.40	5.00	0.00	0.13	0.13
5.85	2.00	0.40	5.00	0.00	0.13	0.13
5.90	2.00	0.40	5.00	0.00	0.13	0.13
5.95	2.00	0.40	5.00	0.00	0.13	0.13
6.00	2.00	0.40	5.00	0.00	0.13	0.13
6.05	2.00	0.40	5.00	0.00	0.13	0.13
6.10	2.00	0.40	5.00	0.00	0.13	0.13
6.15	2.00	0.40	5.00	0.00	0.13	0.13
6.20	2.00	0.40	5.00	0.00	0.13	0.13
6.25	2.00	0.40	5.00	0.00	0.13	0.13
6.30	2.00	0.40	5.00	0.00	0.13	0.13
6.35	2.00	0.40	5.00	0.00	0.13	0.13
6.40	2.00	0.40	5.00	0.00	0.13	0.13
6.45	2.00	0.40	5.00	0.00	0.13	0.13
6.50	2.00	0.40	5.00	0.00	0.13	0.13
6.55	2.00	0.40	5.00	0.00	0.13	0.13
6.60	2.00	0.40	5.00	0.00	0.13	0.13
6.65	2.00	0.40	5.00	0.00	0.13	0.13

6.70	2.00	0.40	5.00	0.00	0.13	0.13
6.75	2.00	0.40	5.00	0.00	0.13	0.13
6.80	2.00	0.40	5.00	0.00	0.13	0.13
6.85	2.00	0.40	5.00	0.00	0.13	0.13
6.90	2.00	0.40	5.00	0.00	0.13	0.13
6.95	2.00	0.40	5.00	0.00	0.13	0.13
7.00	2.00	0.40	5.00	0.00	0.13	0.13
7.05	2.00	0.40	5.00	0.00	0.13	0.13
7.10	2.00	0.40	5.00	0.00	0.13	0.13
7.15	2.00	0.40	5.00	0.00	0.13	0.13
7.20	2.00	0.40	5.00	0.00	0.13	0.13
7.25	2.00	0.40	5.00	0.00	0.13	0.13
7.30	2.00	0.40	5.00	0.00	0.13	0.13
7.35	2.00	0.40	5.00	0.00	0.13	0.13
7.40	2.00	0.40	5.00	0.00	0.13	0.13
7.45	2.00	0.40	5.00	0.00	0.13	0.13
7.50	2.00	0.40	5.00	0.00	0.13	0.13
7.55	2.00	0.40	5.00	0.00	0.13	0.13
7.60	2.00	0.40	5.00	0.00	0.13	0.13
7.65	2.00	0.40	5.00	0.00	0.13	0.13
7.70	2.00	0.40	5.00	0.00	0.13	0.13
7.75	2.00	0.40	5.00	0.00	0.13	0.13
7.80	2.00	0.40	5.00	0.00	0.13	0.13
7.85	2.00	0.40	5.00	0.00	0.13	0.13
7.90	2.00	0.40	5.00	0.00	0.13	0.13
7.95	2.00	0.40	5.00	0.00	0.13	0.13
8.00	2.00	0.40	5.00	0.00	0.13	0.13
8.05	2.00	0.40	5.00	0.00	0.13	0.13
8.10	2.00	0.40	5.00	0.00	0.13	0.13
8.15	2.00	0.40	5.00	0.00	0.13	0.13
8.20	2.00	0.40	5.00	0.00	0.13	0.13
8.25	2.00	0.40	5.00	0.00	0.13	0.13
8.30	2.00	0.40	5.00	0.00	0.13	0.13
8.35	2.00	0.40	5.00	0.00	0.13	0.13
8.40	2.00	0.40	5.00	0.00	0.13	0.13
8.45	2.00	0.40	5.00	0.00	0.13	0.13
8.50	2.00	0.40	5.00	0.00	0.13	0.13
8.55	2.00	0.40	5.00	0.00	0.13	0.13
8.60	2.00	0.39	5.00	0.00	0.13	0.13
8.65	2.00	0.39	5.00	0.00	0.13	0.13
8.70	2.00	0.39	5.00	0.00	0.13	0.13
8.75	2.00	0.39	5.00	0.00	0.13	0.13
8.80	2.00	0.39	5.00	0.00	0.13	0.13
8.85	2.00	0.39	5.00	0.00	0.13	0.13
8.90	2.00	0.39	5.00	0.00	0.13	0.13
8.95	2.00	0.39	5.00	0.00	0.13	0.13
9.00	2.00	0.39	5.00	0.00	0.13	0.13
9.05	2.00	0.39	5.00	0.00	0.13	0.13
9.10	2.00	0.39	5.00	0.00	0.13	0.13
9.15	2.00	0.39	5.00	0.00	0.13	0.13
9.20	2.00	0.39	5.00	0.00	0.13	0.13
9.25	2.00	0.39	5.00	0.00	0.13	0.13
9.30	2.00	0.39	5.00	0.00	0.13	0.13
9.35	2.00	0.39	5.00	0.00	0.13	0.13

9.40	2.00	0.39	5.00	0.00	0.13	0.13
9.45	2.00	0.39	5.00	0.00	0.13	0.13
9.50	2.00	0.39	5.00	0.00	0.13	0.13
9.55	2.00	0.39	5.00	0.00	0.13	0.13
9.60	2.00	0.39	5.00	0.00	0.13	0.13
9.65	2.00	0.39	5.00	0.00	0.13	0.13
9.70	2.00	0.39	5.00	0.00	0.13	0.13
9.75	2.00	0.39	5.00	0.00	0.13	0.13
9.80	2.00	0.39	5.00	0.00	0.13	0.13
9.85	2.00	0.39	5.00	0.00	0.13	0.13
9.90	2.00	0.39	5.00	0.00	0.13	0.13
9.95	2.00	0.39	5.00	0.00	0.13	0.13
10.00	2.00	0.39	5.00	0.00	0.13	0.13
10.05	2.00	0.39	5.00	0.00	0.13	0.13
10.10	2.00	0.39	5.00	0.00	0.13	0.13
10.15	2.00	0.39	5.00	0.00	0.13	0.13
10.20	2.00	0.39	5.00	0.00	0.13	0.13
10.25	2.00	0.39	5.00	0.00	0.13	0.13
10.30	2.00	0.39	5.00	0.00	0.13	0.13
10.35	2.00	0.39	5.00	0.00	0.13	0.13
10.40	2.00	0.39	5.00	0.00	0.13	0.13
10.45	2.00	0.39	5.00	0.00	0.13	0.13
10.50	2.00	0.39	5.00	0.00	0.13	0.13
10.55	2.00	0.39	5.00	0.00	0.13	0.13
10.60	2.00	0.39	5.00	0.00	0.13	0.13
10.65	2.00	0.39	5.00	0.00	0.13	0.13
10.70	2.00	0.39	5.00	0.00	0.13	0.13
10.75	2.00	0.39	5.00	0.00	0.13	0.13
10.80	2.00	0.39	5.00	0.00	0.13	0.13
10.85	2.00	0.39	5.00	0.00	0.13	0.13
10.90	2.00	0.39	5.00	0.00	0.13	0.13
10.95	2.00	0.39	5.00	0.00	0.13	0.13
11.00	2.00	0.39	5.00	0.00	0.13	0.13
11.05	2.00	0.39	5.00	0.00	0.13	0.13
11.10	2.00	0.39	5.00	0.00	0.13	0.13
11.15	2.00	0.39	5.00	0.00	0.13	0.13
11.20	2.00	0.39	5.00	0.00	0.13	0.13
11.25	2.00	0.39	5.00	0.00	0.13	0.13
11.30	2.00	0.39	5.00	0.00	0.13	0.13
11.35	2.00	0.39	5.00	0.00	0.13	0.13
11.40	2.00	0.39	5.00	0.00	0.13	0.13
11.45	2.00	0.39	5.00	0.00	0.13	0.13
11.50	2.00	0.39	5.00	0.00	0.13	0.13
11.55	2.00	0.39	5.00	0.00	0.13	0.13
11.60	2.00	0.39	5.00	0.00	0.13	0.13
11.65	2.00	0.39	5.00	0.00	0.13	0.13
11.70	2.00	0.39	5.00	0.00	0.13	0.13
11.75	2.00	0.39	5.00	0.00	0.13	0.13
11.80	2.00	0.39	5.00	0.00	0.13	0.13
11.85	2.00	0.39	5.00	0.00	0.13	0.13
11.90	2.00	0.39	5.00	0.00	0.13	0.13
11.95	2.00	0.39	5.00	0.00	0.13	0.13
12.00	2.00	0.39	5.00	0.00	0.13	0.13
12.05	2.00	0.39	5.00	0.00	0.13	0.13

12.10	2.00	0.39	5.00	0.00	0.13	0.13
12.15	2.00	0.39	5.00	0.00	0.13	0.13
12.20	2.00	0.39	5.00	0.00	0.13	0.13
12.25	2.00	0.39	5.00	0.00	0.13	0.13
12.30	2.00	0.39	5.00	0.00	0.13	0.13
12.35	2.00	0.39	5.00	0.00	0.13	0.13
12.40	2.00	0.39	5.00	0.00	0.13	0.13
12.45	2.00	0.39	5.00	0.00	0.13	0.13
12.50	2.00	0.39	5.00	0.00	0.13	0.13
12.55	2.00	0.39	5.00	0.00	0.13	0.13
12.60	2.00	0.39	5.00	0.00	0.13	0.13
12.65	2.00	0.39	5.00	0.00	0.13	0.13
12.70	2.00	0.39	5.00	0.00	0.13	0.13
12.75	2.00	0.39	5.00	0.00	0.13	0.13
12.80	2.00	0.39	5.00	0.00	0.13	0.13
12.85	2.00	0.39	5.00	0.00	0.13	0.13
12.90	2.00	0.39	5.00	0.00	0.13	0.13
12.95	2.00	0.39	5.00	0.00	0.13	0.13
13.00	2.00	0.39	5.00	0.00	0.13	0.13
13.05	2.00	0.39	5.00	0.00	0.13	0.13
13.10	2.00	0.39	5.00	0.00	0.13	0.13
13.15	2.00	0.39	5.00	0.00	0.13	0.13
13.20	2.00	0.39	5.00	0.00	0.13	0.13
13.25	2.00	0.39	5.00	0.00	0.13	0.13
13.30	2.00	0.39	5.00	0.00	0.13	0.13
13.35	2.00	0.39	5.00	0.00	0.13	0.13
13.40	2.00	0.39	5.00	0.00	0.13	0.13
13.45	2.00	0.39	5.00	0.00	0.13	0.13
13.50	2.00	0.39	5.00	0.00	0.13	0.13
13.55	2.00	0.39	5.00	0.00	0.13	0.13
13.60	2.00	0.39	5.00	0.00	0.13	0.13
13.65	2.00	0.39	5.00	0.00	0.13	0.13
13.70	2.00	0.39	5.00	0.00	0.13	0.13
13.75	2.00	0.39	5.00	0.00	0.13	0.13
13.80	2.00	0.39	5.00	0.00	0.13	0.13
13.85	2.00	0.39	5.00	0.00	0.13	0.13
13.90	2.00	0.39	5.00	0.00	0.13	0.13
13.95	2.00	0.39	5.00	0.00	0.13	0.13
14.00	2.00	0.39	5.00	0.00	0.13	0.13
14.05	2.00	0.39	5.00	0.00	0.13	0.13
14.10	2.00	0.39	5.00	0.00	0.13	0.13
14.15	2.00	0.39	5.00	0.00	0.13	0.13
14.20	2.00	0.39	5.00	0.00	0.13	0.13
14.25	2.00	0.39	5.00	0.00	0.13	0.13
14.30	2.00	0.39	5.00	0.00	0.13	0.13
14.35	2.00	0.39	5.00	0.00	0.13	0.13
14.40	2.00	0.39	5.00	0.00	0.13	0.13
14.45	2.00	0.39	5.00	0.00	0.13	0.13
14.50	2.00	0.39	5.00	0.00	0.13	0.13
14.55	2.00	0.39	5.00	0.00	0.13	0.13
14.60	2.00	0.39	5.00	0.00	0.13	0.13
14.65	2.00	0.39	5.00	0.00	0.13	0.13
14.70	2.00	0.39	5.00	0.00	0.13	0.13
14.75	2.00	0.39	5.00	0.00	0.13	0.13

14.80	2.00	0.39	5.00	0.00	0.13	0.13
14.85	2.00	0.39	5.00	0.00	0.13	0.13
14.90	2.00	0.39	5.00	0.00	0.13	0.13
14.95	2.00	0.39	5.00	0.00	0.13	0.13
15.00	2.00	0.39	5.00	0.00	0.13	0.13
15.05	2.00	0.39	5.00	0.00	0.13	0.13
15.10	2.00	0.39	5.00	0.00	0.13	0.13
15.15	2.00	0.39	5.00	0.00	0.13	0.13
15.20	2.00	0.39	5.00	0.00	0.13	0.13
15.25	2.00	0.39	5.00	0.00	0.13	0.13
15.30	2.00	0.39	5.00	0.00	0.13	0.13
15.35	2.00	0.39	5.00	0.00	0.13	0.13
15.40	2.00	0.39	5.00	0.00	0.13	0.13
15.45	2.00	0.39	5.00	0.00	0.13	0.13
15.50	2.00	0.39	5.00	0.00	0.13	0.13
15.55	2.00	0.39	5.00	0.00	0.13	0.13
15.60	2.00	0.39	5.00	0.00	0.13	0.13
15.65	2.00	0.39	5.00	0.00	0.13	0.13
15.70	2.00	0.39	5.00	0.00	0.13	0.13
15.75	2.00	0.39	5.00	0.00	0.13	0.13
15.80	2.00	0.39	5.00	0.00	0.13	0.13
15.85	2.00	0.39	5.00	0.00	0.13	0.13
15.90	2.00	0.39	5.00	0.00	0.13	0.13
15.95	2.00	0.39	5.00	0.00	0.13	0.13
16.00	2.00	0.39	5.00	0.00	0.13	0.13
16.05	2.00	0.39	5.00	0.00	0.13	0.13
16.10	2.00	0.39	5.00	0.00	0.13	0.13
16.15	2.00	0.39	5.00	0.00	0.13	0.13
16.20	2.00	0.39	5.00	0.00	0.13	0.13
16.25	2.00	0.39	5.00	0.00	0.13	0.13
16.30	2.00	0.39	5.00	0.00	0.13	0.13
16.35	2.00	0.39	5.00	0.00	0.13	0.13
16.40	2.00	0.39	5.00	0.00	0.13	0.13
16.45	2.00	0.39	5.00	0.00	0.13	0.13
16.50	2.00	0.39	5.00	0.00	0.13	0.13
16.55	2.00	0.39	5.00	0.00	0.13	0.13
16.60	2.00	0.39	5.00	0.00	0.13	0.13
16.65	2.00	0.39	5.00	0.00	0.13	0.13
16.70	2.00	0.39	5.00	0.00	0.13	0.13
16.75	2.00	0.39	5.00	0.00	0.13	0.13
16.80	2.00	0.39	5.00	0.00	0.13	0.13
16.85	2.00	0.39	5.00	0.00	0.13	0.13
16.90	2.00	0.39	5.00	0.00	0.13	0.13
16.95	2.00	0.39	5.00	0.00	0.13	0.13
17.00	2.00	0.39	5.00	0.00	0.13	0.13
17.05	2.00	0.39	5.00	0.00	0.13	0.13
17.10	2.00	0.39	5.00	0.00	0.13	0.13
17.15	2.00	0.39	5.00	0.00	0.13	0.13
17.20	2.00	0.39	5.00	0.00	0.13	0.13
17.25	2.00	0.39	5.00	0.00	0.13	0.13
17.30	2.00	0.39	5.00	0.00	0.13	0.13
17.35	2.00	0.39	5.00	0.00	0.13	0.13
17.40	2.00	0.39	5.00	0.00	0.13	0.13
17.45	2.00	0.39	5.00	0.00	0.13	0.13

17.50	2.00	0.39	5.00	0.00	0.13	0.13
17.55	2.00	0.39	5.00	0.00	0.13	0.13
17.60	2.00	0.39	5.00	0.00	0.13	0.13
17.65	2.00	0.39	5.00	0.00	0.13	0.13
17.70	2.00	0.39	5.00	0.00	0.13	0.13
17.75	2.00	0.39	5.00	0.00	0.13	0.13
17.80	2.00	0.39	5.00	0.00	0.13	0.13
17.85	2.00	0.39	5.00	0.00	0.13	0.13
17.90	2.00	0.39	5.00	0.00	0.13	0.13
17.95	2.00	0.39	5.00	0.00	0.13	0.13
18.00	2.00	0.39	5.00	0.00	0.13	0.13
18.05	2.00	0.39	5.00	0.00	0.13	0.13
18.10	2.00	0.39	5.00	0.00	0.13	0.13
18.15	2.00	0.39	5.00	0.00	0.13	0.13
18.20	2.00	0.39	5.00	0.00	0.13	0.13
18.25	2.00	0.39	5.00	0.00	0.13	0.13
18.30	2.00	0.39	5.00	0.00	0.13	0.13
18.35	2.00	0.39	5.00	0.00	0.13	0.13
18.40	2.00	0.39	5.00	0.00	0.13	0.13
18.45	2.00	0.39	5.00	0.00	0.13	0.13
18.50	2.00	0.39	5.00	0.00	0.13	0.13
18.55	2.00	0.39	5.00	0.00	0.13	0.13
18.60	2.00	0.39	5.00	0.00	0.13	0.13
18.65	2.00	0.39	5.00	0.00	0.13	0.13
18.70	2.00	0.39	5.00	0.00	0.13	0.13
18.75	2.00	0.39	5.00	0.00	0.13	0.13
18.80	2.00	0.39	5.00	0.00	0.13	0.13
18.85	2.00	0.39	5.00	0.00	0.13	0.13
18.90	2.00	0.39	5.00	0.00	0.13	0.13
18.95	2.00	0.39	5.00	0.00	0.13	0.13
19.00	2.00	0.39	5.00	0.00	0.13	0.13
19.05	2.00	0.39	5.00	0.00	0.13	0.13
19.10	2.00	0.39	5.00	0.00	0.13	0.13
19.15	2.00	0.39	5.00	0.00	0.13	0.13
19.20	2.00	0.39	5.00	0.00	0.13	0.13
19.25	2.00	0.38	5.00	0.00	0.13	0.13
19.30	2.00	0.38	5.00	0.00	0.13	0.13
19.35	2.00	0.38	5.00	0.00	0.13	0.13
19.40	2.00	0.38	5.00	0.00	0.13	0.13
19.45	2.00	0.38	5.00	0.00	0.13	0.13
19.50	2.00	0.38	5.00	0.00	0.13	0.13
19.55	2.00	0.38	5.00	0.00	0.13	0.13
19.60	2.00	0.38	5.00	0.00	0.13	0.13
19.65	2.00	0.38	5.00	0.00	0.13	0.13
19.70	2.00	0.38	5.00	0.00	0.13	0.13
19.75	2.00	0.38	5.00	0.00	0.13	0.13
19.80	2.00	0.38	5.00	0.00	0.13	0.13
19.85	2.00	0.38	5.00	0.00	0.13	0.13
19.90	2.00	0.38	5.00	0.00	0.13	0.13
19.95	2.00	0.38	5.00	0.00	0.13	0.13
20.00	2.00	0.38	5.00	0.00	0.13	0.13
20.05	0.78	0.38	5.00	0.00	0.13	0.13
20.10	0.78	0.38	5.00	0.00	0.13	0.13
20.15	0.78	0.38	5.00	0.00	0.13	0.13

20.20	0.78	0.38	5.00	0.00	0.13	0.13
20.25	0.78	0.38	5.00	0.00	0.13	0.13
20.30	0.78	0.38	5.00	0.00	0.13	0.13
20.35	0.78	0.38	5.00	0.00	0.13	0.13
20.40	0.78	0.38	5.00	0.00	0.13	0.13
20.45	0.78	0.38	5.00	0.00	0.13	0.13
20.50	0.78	0.38	5.00	0.00	0.13	0.13
20.55	0.78	0.38	5.00	0.00	0.13	0.13
20.60	0.78	0.38	5.00	0.00	0.12	0.12
20.65	0.78	0.38	5.00	0.00	0.12	0.12
20.70	0.78	0.38	5.00	0.00	0.12	0.12
20.75	0.78	0.38	5.00	0.00	0.12	0.12
20.80	0.78	0.38	5.00	0.00	0.12	0.12
20.85	0.78	0.38	5.00	0.00	0.12	0.12
20.90	0.78	0.38	5.00	0.00	0.12	0.12
20.95	0.78	0.38	5.00	0.00	0.12	0.12
21.00	0.78	0.38	5.00	0.00	0.12	0.12
21.05	0.78	0.38	5.00	0.00	0.12	0.12
21.10	0.78	0.38	5.00	0.00	0.12	0.12
21.15	0.78	0.38	5.00	0.00	0.12	0.12
21.20	0.78	0.38	5.00	0.00	0.12	0.12
21.25	0.78	0.38	5.00	0.00	0.12	0.12
21.30	0.78	0.38	5.00	0.00	0.12	0.12
21.35	0.78	0.38	5.00	0.00	0.12	0.12
21.40	0.78	0.38	5.00	0.00	0.12	0.12
21.45	0.78	0.38	5.00	0.00	0.12	0.12
21.50	0.78	0.38	5.00	0.00	0.12	0.12
21.55	0.78	0.38	5.00	0.00	0.12	0.12
21.60	0.78	0.38	5.00	0.00	0.12	0.12
21.65	0.78	0.38	5.00	0.00	0.12	0.12
21.70	0.78	0.38	5.00	0.00	0.12	0.12
21.75	0.78	0.38	5.00	0.00	0.12	0.12
21.80	0.78	0.38	5.00	0.00	0.12	0.12
21.85	0.78	0.38	5.00	0.00	0.12	0.12
21.90	0.78	0.38	5.00	0.00	0.12	0.12
21.95	0.78	0.38	5.00	0.00	0.12	0.12
22.00	0.78	0.38	5.00	0.00	0.12	0.12
22.05	0.78	0.38	5.00	0.00	0.12	0.12
22.10	0.78	0.38	5.00	0.00	0.12	0.12
22.15	0.78	0.38	5.00	0.00	0.12	0.12
22.20	0.78	0.38	5.00	0.00	0.12	0.12
22.25	0.78	0.38	5.00	0.00	0.12	0.12
22.30	0.78	0.38	5.00	0.00	0.12	0.12
22.35	0.78	0.38	5.00	0.00	0.11	0.11
22.40	0.78	0.38	5.00	0.00	0.11	0.11
22.45	0.78	0.38	5.00	0.00	0.11	0.11
22.50	0.78	0.38	5.00	0.00	0.11	0.11
22.55	0.78	0.38	5.00	0.00	0.11	0.11
22.60	0.78	0.38	5.00	0.00	0.11	0.11
22.65	0.78	0.38	5.00	0.00	0.11	0.11
22.70	0.78	0.38	5.00	0.00	0.11	0.11
22.75	0.78	0.38	5.00	0.00	0.11	0.11
22.80	0.78	0.38	5.00	0.00	0.11	0.11
22.85	0.78	0.38	5.00	0.00	0.11	0.11

22.90	0.78	0.38	5.00	0.00	0.11	0.11
22.95	0.78	0.38	5.00	0.00	0.11	0.11
23.00	0.78	0.38	5.00	0.00	0.11	0.11
23.05	0.78	0.38	5.00	0.00	0.11	0.11
23.10	0.78	0.38	5.00	0.00	0.11	0.11
23.15	0.78	0.38	5.00	0.00	0.11	0.11
23.20	0.78	0.38	5.00	0.00	0.11	0.11
23.25	0.78	0.38	5.00	0.00	0.11	0.11
23.30	0.78	0.38	5.00	0.00	0.11	0.11
23.35	0.78	0.38	5.00	0.00	0.11	0.11
23.40	0.78	0.38	5.00	0.00	0.11	0.11
23.45	0.78	0.38	5.00	0.00	0.11	0.11
23.50	0.78	0.38	5.00	0.00	0.11	0.11
23.55	0.78	0.38	5.00	0.00	0.11	0.11
23.60	0.78	0.38	5.00	0.00	0.11	0.11
23.65	0.78	0.38	5.00	0.00	0.11	0.11
23.70	0.78	0.38	5.00	0.00	0.11	0.11
23.75	0.78	0.38	5.00	0.00	0.11	0.11
23.80	0.78	0.38	5.00	0.00	0.11	0.11
23.85	0.78	0.38	5.00	0.00	0.11	0.11
23.90	0.78	0.38	5.00	0.00	0.11	0.11
23.95	0.78	0.38	5.00	0.00	0.11	0.11
24.00	0.78	0.38	5.00	0.00	0.11	0.11
24.05	0.78	0.38	5.00	0.00	0.11	0.11
24.10	0.78	0.38	5.00	0.00	0.11	0.11
24.15	0.78	0.38	5.00	0.00	0.11	0.11
24.20	0.78	0.38	5.00	0.00	0.11	0.11
24.25	0.78	0.38	5.00	0.00	0.11	0.11
24.30	0.78	0.38	5.00	0.00	0.11	0.11
24.35	0.78	0.38	5.00	0.00	0.11	0.11
24.40	0.78	0.38	5.00	0.00	0.11	0.11
24.45	0.78	0.38	5.00	0.00	0.11	0.11
24.50	0.78	0.38	5.00	0.00	0.11	0.11
24.55	0.78	0.38	5.00	0.00	0.11	0.11
24.60	0.78	0.38	5.00	0.00	0.11	0.11
24.65	0.78	0.38	5.00	0.00	0.10	0.10
24.70	0.78	0.38	5.00	0.00	0.10	0.10
24.75	0.78	0.38	5.00	0.00	0.10	0.10
24.80	0.78	0.38	5.00	0.00	0.10	0.10
24.85	0.78	0.38	5.00	0.00	0.10	0.10
24.90	0.78	0.38	5.00	0.00	0.10	0.10
24.95	0.78	0.38	5.00	0.00	0.10	0.10
25.00	0.78	0.38	5.00	0.00	0.10	0.10
25.05	0.78	0.38	5.00	0.00	0.10	0.10
25.10	0.78	0.38	5.00	0.00	0.10	0.10
25.15	0.78	0.38	5.00	0.00	0.10	0.10
25.20	0.78	0.38	5.00	0.00	0.10	0.10
25.25	0.78	0.38	5.00	0.00	0.10	0.10
25.30	0.78	0.38	5.00	0.00	0.10	0.10
25.35	0.78	0.38	5.00	0.00	0.10	0.10
25.40	0.78	0.38	5.00	0.00	0.10	0.10
25.45	0.78	0.38	5.00	0.00	0.10	0.10
25.50	0.78	0.38	5.00	0.00	0.10	0.10
25.55	0.78	0.38	5.00	0.00	0.10	0.10

25.60	0.78	0.38	5.00	0.00	0.10	0.10
25.65	0.78	0.38	5.00	0.00	0.10	0.10
25.70	0.78	0.38	5.00	0.00	0.10	0.10
25.75	0.78	0.38	5.00	0.00	0.10	0.10
25.80	0.78	0.38	5.00	0.00	0.10	0.10
25.85	0.78	0.38	5.00	0.00	0.10	0.10
25.90	0.78	0.38	5.00	0.00	0.10	0.10
25.95	0.78	0.38	5.00	0.00	0.10	0.10
26.00	0.79	0.38	5.00	0.00	0.10	0.10
26.05	0.79	0.38	5.00	0.00	0.10	0.10
26.10	0.79	0.38	5.00	0.00	0.10	0.10
26.15	0.79	0.38	5.00	0.00	0.10	0.10
26.20	0.78	0.38	5.00	0.00	0.10	0.10
26.25	0.78	0.38	5.00	0.00	0.10	0.10
26.30	0.78	0.38	5.00	0.00	0.10	0.10
26.35	0.78	0.38	5.00	0.00	0.10	0.10
26.40	0.78	0.38	5.00	0.00	0.10	0.10
26.45	0.78	0.38	5.00	0.00	0.10	0.10
26.50	0.78	0.38	5.00	0.00	0.10	0.10
26.55	0.78	0.38	5.00	0.00	0.10	0.10
26.60	0.78	0.38	5.00	0.00	0.10	0.10
26.65	0.78	0.38	5.00	0.00	0.10	0.10
26.70	0.78	0.38	5.00	0.00	0.10	0.10
26.75	0.78	0.38	5.00	0.00	0.10	0.10
26.80	0.78	0.38	5.00	0.00	0.10	0.10
26.85	0.78	0.38	5.00	0.00	0.10	0.10
26.90	0.78	0.38	5.00	0.00	0.10	0.10
26.95	0.78	0.38	5.00	0.00	0.10	0.10
27.00	0.78	0.38	5.00	0.00	0.10	0.10
27.05	0.78	0.38	5.00	0.00	0.10	0.10
27.10	0.78	0.38	5.00	0.00	0.09	0.09
27.15	0.78	0.38	5.00	0.00	0.09	0.09
27.20	0.78	0.38	5.00	0.00	0.09	0.09
27.25	0.78	0.38	5.00	0.00	0.09	0.09
27.30	0.78	0.38	5.00	0.00	0.09	0.09
27.35	0.78	0.38	5.00	0.00	0.09	0.09
27.40	0.78	0.38	5.00	0.00	0.09	0.09
27.45	0.78	0.38	5.00	0.00	0.09	0.09
27.50	0.78	0.38	5.00	0.00	0.09	0.09
27.55	0.78	0.38	5.00	0.00	0.09	0.09
27.60	0.78	0.38	5.00	0.00	0.09	0.09
27.65	0.78	0.38	5.00	0.00	0.09	0.09
27.70	0.78	0.38	5.00	0.00	0.09	0.09
27.75	0.78	0.38	5.00	0.00	0.09	0.09
27.80	0.78	0.38	5.00	0.00	0.09	0.09
27.85	0.78	0.38	5.00	0.00	0.09	0.09
27.90	0.78	0.38	5.00	0.00	0.09	0.09
27.95	0.78	0.38	5.00	0.00	0.09	0.09
28.00	0.78	0.38	5.00	0.00	0.09	0.09
28.05	0.78	0.38	5.00	0.00	0.09	0.09
28.10	0.78	0.38	5.00	0.00	0.09	0.09
28.15	0.78	0.38	5.00	0.00	0.09	0.09
28.20	0.78	0.38	5.00	0.00	0.09	0.09
28.25	0.78	0.38	5.00	0.00	0.09	0.09

28.30	0.78	0.38	5.00	0.00	0.09	0.09
28.35	0.78	0.38	5.00	0.00	0.09	0.09
28.40	0.78	0.38	5.00	0.00	0.09	0.09
28.45	0.78	0.38	5.00	0.00	0.09	0.09
28.50	0.77	0.38	5.00	0.00	0.09	0.09
28.55	0.77	0.38	5.00	0.00	0.09	0.09
28.60	0.77	0.38	5.00	0.00	0.09	0.09
28.65	0.77	0.38	5.00	0.00	0.09	0.09
28.70	0.77	0.38	5.00	0.00	0.09	0.09
28.75	0.77	0.38	5.00	0.00	0.09	0.09
28.80	0.77	0.38	5.00	0.00	0.09	0.09
28.85	0.77	0.38	5.00	0.00	0.09	0.09
28.90	0.77	0.38	5.00	0.00	0.09	0.09
28.95	0.77	0.38	5.00	0.00	0.09	0.09
29.00	0.77	0.38	5.00	0.00	0.09	0.09
29.05	0.77	0.38	5.00	0.00	0.09	0.09
29.10	0.77	0.38	5.00	0.00	0.09	0.09
29.15	0.77	0.38	5.00	0.00	0.09	0.09
29.20	0.77	0.38	5.00	0.00	0.09	0.09
29.25	0.77	0.38	5.00	0.00	0.09	0.09
29.30	0.77	0.38	5.00	0.00	0.09	0.09
29.35	0.77	0.38	5.00	0.00	0.09	0.09
29.40	0.77	0.38	5.00	0.00	0.09	0.09
29.45	0.77	0.38	5.00	0.00	0.08	0.08
29.50	0.77	0.38	5.00	0.00	0.08	0.08
29.55	0.77	0.38	5.00	0.00	0.08	0.08
29.60	0.77	0.38	5.00	0.00	0.08	0.08
29.65	0.77	0.38	5.00	0.00	0.08	0.08
29.70	0.77	0.38	5.00	0.00	0.08	0.08
29.75	0.77	0.38	5.00	0.00	0.08	0.08
29.80	0.77	0.38	5.00	0.00	0.08	0.08
29.85	0.77	0.38	5.00	0.00	0.08	0.08
29.90	0.77	0.37	5.00	0.00	0.08	0.08
29.95	0.77	0.37	5.00	0.00	0.08	0.08
30.00	0.77	0.37	5.00	0.00	0.08	0.08
30.05	0.77	0.37	5.00	0.00	0.08	0.08
30.10	0.77	0.37	5.00	0.00	0.08	0.08
30.15	0.77	0.37	5.00	0.00	0.08	0.08
30.20	0.77	0.37	5.00	0.00	0.08	0.08
30.25	0.77	0.37	5.00	0.00	0.08	0.08
30.30	0.77	0.37	5.00	0.00	0.08	0.08
30.35	0.77	0.37	5.00	0.00	0.08	0.08
30.40	0.77	0.37	5.00	0.00	0.08	0.08
30.45	0.77	0.37	5.00	0.00	0.08	0.08
30.50	0.77	0.37	5.00	0.00	0.08	0.08
30.55	0.77	0.37	5.00	0.00	0.08	0.08
30.60	0.77	0.37	5.00	0.00	0.08	0.08
30.65	0.77	0.37	5.00	0.00	0.08	0.08
30.70	0.77	0.37	5.00	0.00	0.08	0.08
30.75	0.77	0.37	5.00	0.00	0.08	0.08
30.80	0.77	0.37	5.00	0.00	0.08	0.08
30.85	0.76	0.37	5.00	0.00	0.08	0.08
30.90	0.76	0.37	5.00	0.00	0.08	0.08
30.95	0.76	0.37	5.00	0.00	0.08	0.08

31.00	0.76	0.37	5.00	0.00	0.08	0.08
31.05	0.76	0.37	5.00	0.00	0.08	0.08
31.10	0.76	0.37	5.00	0.00	0.08	0.08
31.15	0.76	0.37	5.00	0.00	0.08	0.08
31.20	0.76	0.37	5.00	0.00	0.08	0.08
31.25	0.76	0.37	5.00	0.00	0.08	0.08
31.30	0.76	0.37	5.00	0.00	0.08	0.08
31.35	0.76	0.37	5.00	0.00	0.08	0.08
31.40	0.76	0.37	5.00	0.00	0.08	0.08
31.45	0.76	0.37	5.00	0.00	0.08	0.08
31.50	0.76	0.37	5.00	0.00	0.08	0.08
31.55	0.76	0.37	5.00	0.00	0.08	0.08
31.60	0.76	0.37	5.00	0.00	0.08	0.08
31.65	0.76	0.37	5.00	0.00	0.08	0.08
31.70	0.76	0.37	5.00	0.00	0.08	0.08
31.75	0.76	0.37	5.00	0.00	0.07	0.07
31.80	0.76	0.37	5.00	0.00	0.07	0.07
31.85	0.76	0.37	5.00	0.00	0.07	0.07
31.90	0.76	0.37	5.00	0.00	0.07	0.07
31.95	0.76	0.37	5.00	0.00	0.07	0.07
32.00	0.76	0.37	5.00	0.00	0.07	0.07
32.05	0.76	0.37	5.00	0.00	0.07	0.07
32.10	0.76	0.37	5.00	0.00	0.07	0.07
32.15	0.76	0.37	5.00	0.00	0.07	0.07
32.20	0.76	0.37	5.00	0.00	0.07	0.07
32.25	0.76	0.37	5.00	0.00	0.07	0.07
32.30	0.76	0.37	5.00	0.00	0.07	0.07
32.35	0.76	0.37	5.00	0.00	0.07	0.07
32.40	0.76	0.37	5.00	0.00	0.07	0.07
32.45	0.76	0.37	5.00	0.00	0.07	0.07
32.50	0.76	0.37	5.00	0.00	0.07	0.07
32.55	0.76	0.37	5.00	0.00	0.07	0.07
32.60	0.76	0.37	5.00	0.00	0.07	0.07
32.65	0.76	0.37	5.00	0.00	0.07	0.07
32.70	0.76	0.37	5.00	0.00	0.07	0.07
32.75	0.76	0.37	5.00	0.00	0.07	0.07
32.80	0.76	0.37	5.00	0.00	0.07	0.07
32.85	0.76	0.37	5.00	0.00	0.07	0.07
32.90	0.76	0.37	5.00	0.00	0.07	0.07
32.95	0.76	0.37	5.00	0.00	0.07	0.07
33.00	0.76	0.36	5.00	0.00	0.07	0.07
33.05	0.76	0.36	5.00	0.00	0.07	0.07
33.10	0.76	0.36	5.00	0.00	0.07	0.07
33.15	0.76	0.36	5.00	0.00	0.07	0.07
33.20	0.76	0.36	5.00	0.00	0.07	0.07
33.25	0.76	0.36	5.00	0.00	0.07	0.07
33.30	0.75	0.36	5.00	0.00	0.07	0.07
33.35	0.75	0.36	5.00	0.00	0.07	0.07
33.40	0.75	0.36	5.00	0.00	0.07	0.07
33.45	0.75	0.36	5.00	0.00	0.07	0.07
33.50	0.75	0.36	5.00	0.00	0.07	0.07
33.55	0.75	0.36	5.00	0.00	0.07	0.07
33.60	0.75	0.36	5.00	0.00	0.07	0.07
33.65	0.75	0.36	5.00	0.00	0.07	0.07

33.70	0.75	0.36	5.00	0.00	0.07	0.07
33.75	0.75	0.36	5.00	0.00	0.07	0.07
33.80	0.75	0.36	5.00	0.00	0.07	0.07
33.85	0.75	0.36	5.00	0.00	0.07	0.07
33.90	0.75	0.36	5.00	0.00	0.07	0.07
33.95	0.75	0.36	5.00	0.00	0.07	0.07
34.00	0.75	0.36	5.00	0.00	0.07	0.07
34.05	0.75	0.36	5.00	0.00	0.07	0.07
34.10	0.75	0.36	5.00	0.00	0.07	0.07
34.15	0.75	0.36	5.00	0.00	0.07	0.07
34.20	0.75	0.36	5.00	0.00	0.07	0.07
34.25	0.75	0.36	5.00	0.00	0.07	0.07
34.30	0.75	0.36	5.00	0.00	0.06	0.06
34.35	0.75	0.36	5.00	0.00	0.06	0.06
34.40	0.75	0.36	5.00	0.00	0.06	0.06
34.45	0.75	0.36	5.00	0.00	0.06	0.06
34.50	0.75	0.36	5.00	0.00	0.06	0.06
34.55	0.75	0.36	5.00	0.00	0.06	0.06
34.60	0.75	0.36	5.00	0.00	0.06	0.06
34.65	0.75	0.36	5.00	0.00	0.06	0.06
34.70	0.75	0.36	5.00	0.00	0.06	0.06
34.75	0.75	0.36	5.00	0.00	0.06	0.06
34.80	0.75	0.36	5.00	0.00	0.06	0.06
34.85	0.75	0.36	5.00	0.00	0.06	0.06
34.90	0.75	0.36	5.00	0.00	0.06	0.06
34.95	0.75	0.36	5.00	0.00	0.06	0.06
35.00	0.75	0.36	5.00	0.00	0.06	0.06
35.05	0.75	0.36	5.00	0.00	0.06	0.06
35.10	0.75	0.36	5.00	0.00	0.06	0.06
35.15	0.75	0.36	5.00	0.00	0.06	0.06
35.20	0.75	0.36	5.00	0.00	0.06	0.06
35.25	0.75	0.36	5.00	0.00	0.06	0.06
35.30	0.75	0.36	5.00	0.00	0.06	0.06
35.35	0.75	0.36	5.00	0.00	0.06	0.06
35.40	0.75	0.36	5.00	0.00	0.06	0.06
35.45	0.75	0.36	5.00	0.00	0.06	0.06
35.50	0.75	0.36	5.00	0.00	0.06	0.06
35.55	0.75	0.36	5.00	0.00	0.06	0.06
35.60	0.75	0.36	5.00	0.00	0.06	0.06
35.65	0.75	0.36	5.00	0.00	0.06	0.06
35.70	0.75	0.36	5.00	0.00	0.06	0.06
35.75	0.75	0.36	5.00	0.00	0.06	0.06
35.80	0.74	0.36	5.00	0.00	0.06	0.06
35.85	0.74	0.36	5.00	0.00	0.06	0.06
35.90	0.74	0.36	5.00	0.00	0.06	0.06
35.95	0.74	0.36	5.00	0.00	0.06	0.06
36.00	0.74	0.36	5.00	0.00	0.06	0.06
36.05	0.74	0.35	5.00	0.00	0.06	0.06
36.10	0.74	0.35	5.00	0.00	0.06	0.06
36.15	0.74	0.35	5.00	0.00	0.06	0.06
36.20	0.74	0.35	5.00	0.00	0.06	0.06
36.25	0.74	0.35	5.00	0.00	0.06	0.06
36.30	0.74	0.35	5.00	0.00	0.06	0.06
36.35	0.74	0.35	5.00	0.00	0.06	0.06

36.40	0.74	0.35	5.00	0.00	0.06	0.06
36.45	0.74	0.35	5.00	0.00	0.06	0.06
36.50	0.74	0.35	5.00	0.00	0.06	0.06
36.55	0.74	0.35	5.00	0.00	0.06	0.06
36.60	0.74	0.35	5.00	0.00	0.06	0.06
36.65	0.74	0.35	5.00	0.00	0.06	0.06
36.70	0.74	0.35	5.00	0.00	0.06	0.06
36.75	0.74	0.35	5.00	0.00	0.06	0.06
36.80	0.74	0.35	5.00	0.00	0.06	0.06
36.85	0.74	0.35	5.00	0.00	0.06	0.06
36.90	0.74	0.35	5.00	0.00	0.06	0.06
36.95	0.74	0.35	5.00	0.00	0.06	0.06
37.00	0.74	0.35	5.00	0.00	0.06	0.06
37.05	0.74	0.35	5.00	0.00	0.06	0.06
37.10	0.74	0.35	5.00	0.00	0.05	0.05
37.15	0.74	0.35	5.00	0.00	0.05	0.05
37.20	0.74	0.35	5.00	0.00	0.05	0.05
37.25	0.74	0.35	5.00	0.00	0.05	0.05
37.30	0.74	0.35	5.00	0.00	0.05	0.05
37.35	0.74	0.35	5.00	0.00	0.05	0.05
37.40	0.74	0.35	5.00	0.00	0.05	0.05
37.45	0.74	0.35	5.00	0.00	0.05	0.05
37.50	0.74	0.35	5.00	0.00	0.05	0.05
37.55	0.74	0.35	5.00	0.00	0.05	0.05
37.60	0.74	0.35	5.00	0.00	0.05	0.05
37.65	0.74	0.35	5.00	0.00	0.05	0.05
37.70	0.74	0.35	5.00	0.00	0.05	0.05
37.75	0.74	0.35	5.00	0.00	0.05	0.05
37.80	0.74	0.35	5.00	0.00	0.05	0.05
37.85	0.74	0.35	5.00	0.00	0.05	0.05
37.90	0.74	0.35	5.00	0.00	0.05	0.05
37.95	0.74	0.35	5.00	0.00	0.05	0.05
38.00	0.74	0.35	5.00	0.00	0.05	0.05
38.05	0.74	0.35	5.00	0.00	0.05	0.05
38.10	0.74	0.35	5.00	0.00	0.05	0.05
38.15	0.74	0.35	5.00	0.00	0.05	0.05
38.20	0.74	0.35	5.00	0.00	0.05	0.05
38.25	0.74	0.35	5.00	0.00	0.05	0.05
38.30	0.74	0.35	5.00	0.00	0.05	0.05
38.35	0.74	0.35	5.00	0.00	0.05	0.05
38.40	0.74	0.35	5.00	0.00	0.05	0.05
38.45	0.73	0.35	5.00	0.00	0.05	0.05
38.50	0.73	0.35	5.00	0.00	0.05	0.05
38.55	0.73	0.35	5.00	0.00	0.05	0.05
38.60	0.73	0.35	5.00	0.00	0.05	0.05
38.65	0.73	0.35	5.00	0.00	0.05	0.05
38.70	0.73	0.35	5.00	0.00	0.05	0.05
38.75	0.73	0.35	5.00	0.00	0.05	0.05
38.80	0.73	0.35	5.00	0.00	0.05	0.05
38.85	0.73	0.35	5.00	0.00	0.05	0.05
38.90	0.73	0.35	5.00	0.00	0.05	0.05
38.95	0.73	0.35	5.00	0.00	0.05	0.05
39.00	0.73	0.35	5.00	0.00	0.05	0.05
39.05	0.73	0.35	5.00	0.00	0.05	0.05

39.10	0.73	0.34	5.00	0.00	0.05	0.05
39.15	0.73	0.34	5.00	0.00	0.05	0.05
39.20	0.73	0.34	5.00	0.00	0.05	0.05
39.25	0.73	0.34	5.00	0.00	0.05	0.05
39.30	0.73	0.34	5.00	0.00	0.05	0.05
39.35	0.73	0.34	5.00	0.00	0.05	0.05
39.40	0.73	0.34	5.00	0.00	0.05	0.05
39.45	0.73	0.34	5.00	0.00	0.05	0.05
39.50	0.73	0.34	5.00	0.00	0.04	0.04
39.55	0.73	0.34	5.00	0.00	0.04	0.04
39.60	0.73	0.34	5.00	0.00	0.04	0.04
39.65	0.73	0.34	5.00	0.00	0.04	0.04
39.70	0.73	0.34	5.00	0.00	0.04	0.04
39.75	0.73	0.34	5.00	0.00	0.04	0.04
39.80	0.73	0.34	5.00	0.00	0.04	0.04
39.85	0.73	0.34	5.00	0.00	0.04	0.04
39.90	0.73	0.34	5.00	0.00	0.04	0.04
39.95	0.73	0.34	5.00	0.00	0.04	0.04
40.00	0.73	0.34	5.00	0.00	0.04	0.04
40.05	0.73	0.34	5.00	0.00	0.04	0.04
40.10	0.73	0.34	5.00	0.00	0.04	0.04
40.15	0.73	0.34	5.00	0.00	0.04	0.04
40.20	0.73	0.34	5.00	0.00	0.04	0.04
40.25	0.73	0.34	5.00	0.00	0.04	0.04
40.30	0.73	0.34	5.00	0.00	0.04	0.04
40.35	0.73	0.34	5.00	0.00	0.04	0.04
40.40	0.73	0.34	5.00	0.00	0.04	0.04
40.45	0.73	0.34	5.00	0.00	0.04	0.04
40.50	0.73	0.34	5.00	0.00	0.04	0.04
40.55	0.73	0.34	5.00	0.00	0.04	0.04
40.60	0.73	0.34	5.00	0.00	0.04	0.04
40.65	0.73	0.34	5.00	0.00	0.04	0.04
40.70	0.73	0.34	5.00	0.00	0.04	0.04
40.75	0.73	0.34	5.00	0.00	0.04	0.04
40.80	0.73	0.34	5.00	0.00	0.04	0.04
40.85	0.73	0.34	5.00	0.00	0.04	0.04
40.90	0.73	0.34	5.00	0.00	0.04	0.04
40.95	0.73	0.34	5.00	0.00	0.04	0.04
41.00	0.73	0.34	5.00	0.00	0.04	0.04
41.05	0.73	0.34	5.00	0.00	0.04	0.04
41.10	0.73	0.34	5.00	0.00	0.04	0.04
41.15	0.73	0.34	5.00	0.00	0.04	0.04
41.20	0.72	0.34	5.00	0.00	0.04	0.04
41.25	0.72	0.34	5.00	0.00	0.04	0.04
41.30	0.72	0.34	5.00	0.00	0.04	0.04
41.35	0.72	0.34	5.00	0.00	0.04	0.04
41.40	0.72	0.34	5.00	0.00	0.04	0.04
41.45	0.72	0.34	5.00	0.00	0.04	0.04
41.50	0.72	0.34	5.00	0.00	0.04	0.04
41.55	0.72	0.34	5.00	0.00	0.04	0.04
41.60	0.72	0.34	5.00	0.00	0.04	0.04
41.65	0.72	0.34	5.00	0.00	0.04	0.04
41.70	0.72	0.34	5.00	0.00	0.04	0.04
41.75	0.72	0.34	5.00	0.00	0.03	0.03

41.80	0.72	0.34	5.00	0.00	0.03	0.03
41.85	0.72	0.34	5.00	0.00	0.03	0.03
41.90	0.72	0.34	5.00	0.00	0.03	0.03
41.95	0.72	0.34	5.00	0.00	0.03	0.03
42.00	0.72	0.34	5.00	0.00	0.03	0.03
42.05	0.72	0.34	5.00	0.00	0.03	0.03
42.10	0.72	0.34	5.00	0.00	0.03	0.03
42.15	0.72	0.33	5.00	0.00	0.03	0.03
42.20	0.72	0.33	5.00	0.00	0.03	0.03
42.25	0.72	0.33	5.00	0.00	0.03	0.03
42.30	0.72	0.33	5.00	0.00	0.03	0.03
42.35	0.72	0.33	5.00	0.00	0.03	0.03
42.40	0.72	0.33	5.00	0.00	0.03	0.03
42.45	0.72	0.33	5.00	0.00	0.03	0.03
42.50	0.72	0.33	5.00	0.00	0.03	0.03
42.55	0.72	0.33	5.00	0.00	0.03	0.03
42.60	0.72	0.33	5.00	0.00	0.03	0.03
42.65	0.72	0.33	5.00	0.00	0.03	0.03
42.70	0.72	0.33	5.00	0.00	0.03	0.03
42.75	0.72	0.33	5.00	0.00	0.03	0.03
42.80	0.72	0.33	5.00	0.00	0.03	0.03
42.85	0.72	0.33	5.00	0.00	0.03	0.03
42.90	0.72	0.33	5.00	0.00	0.03	0.03
42.95	0.72	0.33	5.00	0.00	0.03	0.03
43.00	0.72	0.33	5.00	0.00	0.03	0.03
43.05	0.72	0.33	5.00	0.00	0.03	0.03
43.10	0.72	0.33	5.00	0.00	0.03	0.03
43.15	0.72	0.33	5.00	0.00	0.03	0.03
43.20	0.72	0.33	5.00	0.00	0.03	0.03
43.25	0.72	0.33	5.00	0.00	0.03	0.03
43.30	0.72	0.33	5.00	0.00	0.03	0.03
43.35	0.72	0.33	5.00	0.00	0.03	0.03
43.40	0.72	0.33	5.00	0.00	0.03	0.03
43.45	0.72	0.33	5.00	0.00	0.03	0.03
43.50	0.72	0.33	5.00	0.00	0.03	0.03
43.55	0.72	0.33	5.00	0.00	0.03	0.03
43.60	0.72	0.33	5.00	0.00	0.03	0.03
43.65	0.72	0.33	5.00	0.00	0.03	0.03
43.70	0.72	0.33	5.00	0.00	0.03	0.03
43.75	0.72	0.33	5.00	0.00	0.03	0.03
43.80	0.72	0.33	5.00	0.00	0.03	0.03
43.85	0.72	0.33	5.00	0.00	0.03	0.03
43.90	0.72	0.33	5.00	0.00	0.03	0.03
43.95	0.72	0.33	5.00	0.00	0.03	0.03
44.00	0.72	0.33	5.00	0.00	0.03	0.03
44.05	0.72	0.33	5.00	0.00	0.03	0.03
44.10	0.72	0.33	5.00	0.00	0.03	0.03
44.15	0.71	0.33	5.00	0.00	0.02	0.02
44.20	0.71	0.33	5.00	0.00	0.02	0.02
44.25	0.71	0.33	5.00	0.00	0.02	0.02
44.30	0.71	0.33	5.00	0.00	0.02	0.02
44.35	0.71	0.33	5.00	0.00	0.02	0.02
44.40	0.71	0.33	5.00	0.00	0.02	0.02
44.45	0.71	0.33	5.00	0.00	0.02	0.02

44.50	0.71	0.33	5.00	0.00	0.02	0.02
44.55	0.71	0.33	5.00	0.00	0.02	0.02
44.60	0.71	0.33	5.00	0.00	0.02	0.02
44.65	0.71	0.33	5.00	0.00	0.02	0.02
44.70	0.71	0.33	5.00	0.00	0.02	0.02
44.75	0.71	0.33	5.00	0.00	0.02	0.02
44.80	0.71	0.33	5.00	0.00	0.02	0.02
44.85	0.71	0.33	5.00	0.00	0.02	0.02
44.90	0.71	0.33	5.00	0.00	0.02	0.02
44.95	0.71	0.33	5.00	0.00	0.02	0.02
45.00	0.71	0.33	5.00	0.00	0.02	0.02
45.05	0.71	0.33	5.00	0.00	0.02	0.02
45.10	0.71	0.33	5.00	0.00	0.02	0.02
45.15	0.71	0.33	5.00	0.00	0.02	0.02
45.20	0.71	0.32	5.00	0.00	0.02	0.02
45.25	0.71	0.32	5.00	0.00	0.02	0.02
45.30	0.71	0.32	5.00	0.00	0.02	0.02
45.35	0.71	0.32	5.00	0.00	0.02	0.02
45.40	0.71	0.32	5.00	0.00	0.02	0.02
45.45	0.71	0.32	5.00	0.00	0.02	0.02
45.50	0.71	0.32	5.00	0.00	0.02	0.02
45.55	0.71	0.32	5.00	0.00	0.02	0.02
45.60	0.71	0.32	5.00	0.00	0.02	0.02
45.65	0.71	0.32	5.00	0.00	0.02	0.02
45.70	0.71	0.32	5.00	0.00	0.02	0.02
45.75	0.71	0.32	5.00	0.00	0.02	0.02
45.80	0.71	0.32	5.00	0.00	0.02	0.02
45.85	0.71	0.32	5.00	0.00	0.02	0.02
45.90	0.71	0.32	5.00	0.00	0.02	0.02
45.95	0.71	0.32	5.00	0.00	0.02	0.02
46.00	0.71	0.32	5.00	0.00	0.02	0.02
46.05	0.71	0.32	5.00	0.00	0.02	0.02
46.10	0.71	0.32	5.00	0.00	0.02	0.02
46.15	0.71	0.32	5.00	0.00	0.02	0.02
46.20	0.71	0.32	5.00	0.00	0.02	0.02
46.25	0.71	0.32	5.00	0.00	0.02	0.02
46.30	0.71	0.32	5.00	0.00	0.02	0.02
46.35	0.71	0.32	5.00	0.00	0.02	0.02
46.40	0.71	0.32	5.00	0.00	0.02	0.02
46.45	0.71	0.32	5.00	0.00	0.02	0.02
46.50	0.71	0.32	5.00	0.00	0.01	0.01
46.55	0.71	0.32	5.00	0.00	0.01	0.01
46.60	0.71	0.32	5.00	0.00	0.01	0.01
46.65	0.71	0.32	5.00	0.00	0.01	0.01
46.70	0.71	0.32	5.00	0.00	0.01	0.01
46.75	0.71	0.32	5.00	0.00	0.01	0.01
46.80	0.71	0.32	5.00	0.00	0.01	0.01
46.85	0.71	0.32	5.00	0.00	0.01	0.01
46.90	0.71	0.32	5.00	0.00	0.01	0.01
46.95	0.71	0.32	5.00	0.00	0.01	0.01
47.00	0.71	0.32	5.00	0.00	0.01	0.01
47.05	0.71	0.32	5.00	0.00	0.01	0.01
47.10	0.71	0.32	5.00	0.00	0.01	0.01
47.15	0.70	0.32	5.00	0.00	0.01	0.01

47.20	0.70	0.32	5.00	0.00	0.01	0.01
47.25	0.70	0.32	5.00	0.00	0.01	0.01
47.30	0.70	0.32	5.00	0.00	0.01	0.01
47.35	0.70	0.32	5.00	0.00	0.01	0.01
47.40	0.70	0.32	5.00	0.00	0.01	0.01
47.45	0.70	0.32	5.00	0.00	0.01	0.01
47.50	0.70	0.32	5.00	0.00	0.01	0.01
47.55	0.70	0.32	5.00	0.00	0.01	0.01
47.60	0.70	0.32	5.00	0.00	0.01	0.01
47.65	0.70	0.32	5.00	0.00	0.01	0.01
47.70	0.70	0.32	5.00	0.00	0.01	0.01
47.75	0.70	0.32	5.00	0.00	0.01	0.01
47.80	0.70	0.32	5.00	0.00	0.01	0.01
47.85	0.70	0.32	5.00	0.00	0.01	0.01
47.90	0.70	0.32	5.00	0.00	0.01	0.01
47.95	0.70	0.32	5.00	0.00	0.01	0.01
48.00	0.70	0.32	5.00	0.00	0.01	0.01
48.05	0.70	0.32	5.00	0.00	0.01	0.01
48.10	0.70	0.32	5.00	0.00	0.01	0.01
48.15	0.70	0.32	5.00	0.00	0.01	0.01
48.20	0.70	0.32	5.00	0.00	0.01	0.01
48.25	0.70	0.31	5.00	0.00	0.01	0.01
48.30	0.70	0.31	5.00	0.00	0.01	0.01
48.35	0.70	0.31	5.00	0.00	0.01	0.01
48.40	0.70	0.31	5.00	0.00	0.01	0.01
48.45	0.70	0.31	5.00	0.00	0.01	0.01
48.50	0.70	0.31	5.00	0.00	0.01	0.01
48.55	0.70	0.31	5.00	0.00	0.01	0.01
48.60	0.70	0.31	5.00	0.00	0.01	0.01
48.65	0.70	0.31	5.00	0.00	0.01	0.01
48.70	0.70	0.31	5.00	0.00	0.01	0.01
48.75	0.70	0.31	5.00	0.00	0.01	0.01
48.80	0.70	0.31	5.00	0.00	0.01	0.01
48.85	0.70	0.31	5.00	0.00	0.01	0.01
48.90	0.70	0.31	5.00	0.00	0.01	0.01
48.95	0.70	0.31	5.00	0.00	0.01	0.01
49.00	0.70	0.31	5.00	0.00	0.01	0.01
49.05	0.70	0.31	5.00	0.00	0.01	0.01
49.10	0.70	0.31	5.00	0.00	0.01	0.01
49.15	0.70	0.31	5.00	0.00	0.01	0.01
49.20	0.70	0.31	5.00	0.00	0.01	0.01
49.25	0.70	0.31	5.00	0.00	0.01	0.01
49.30	0.70	0.31	5.00	0.00	0.01	0.01
49.35	0.70	0.31	5.00	0.00	0.00	0.00
49.40	0.70	0.31	5.00	0.00	0.00	0.00
49.45	0.70	0.31	5.00	0.00	0.00	0.00
49.50	0.70	0.31	5.00	0.00	0.00	0.00
49.55	0.70	0.31	5.00	0.00	0.00	0.00
49.60	0.70	0.31	5.00	0.00	0.00	0.00
49.65	0.70	0.31	5.00	0.00	0.00	0.00
49.70	0.70	0.31	5.00	0.00	0.00	0.00
49.75	0.70	0.31	5.00	0.00	0.00	0.00
49.80	0.70	0.31	5.00	0.00	0.00	0.00
49.85	0.70	0.31	5.00	0.00	0.00	0.00

49.90	0.70	0.31	5.00	0.00	0.00	0.00
49.95	0.70	0.31	5.00	0.00	0.00	0.00
50.00	0.70	0.31	5.00	0.00	0.00	0.00
50.05	0.70	0.31	5.00	0.00	0.00	0.00
50.10	0.70	0.31	5.00	0.00	0.00	0.00
50.15	0.70	0.31	5.00	0.00	0.00	0.00
50.20	0.70	0.31	5.00	0.00	0.00	0.00
50.25	0.69	0.31	5.00	0.00	0.00	0.00
50.30	0.69	0.31	5.00	0.00	0.00	0.00
50.35	0.69	0.31	5.00	0.00	0.00	0.00
50.40	0.69	0.31	5.00	0.00	0.00	0.00
50.45	0.69	0.31	5.00	0.00	0.00	0.00
50.50	0.69	0.31	5.00	0.00	0.00	0.00
50.55	0.69	0.31	5.00	0.00	0.00	0.00
50.60	0.69	0.31	5.00	0.00	0.00	0.00
50.65	0.69	0.31	5.00	0.00	0.00	0.00
50.70	0.69	0.31	5.00	0.00	0.00	0.00
50.75	0.69	0.31	5.00	0.00	0.00	0.00
50.80	0.69	0.31	5.00	0.00	0.00	0.00
50.85	0.69	0.31	5.00	0.00	0.00	0.00
50.90	0.69	0.31	5.00	0.00	0.00	0.00
50.95	0.69	0.31	5.00	0.00	0.00	0.00
51.00	0.69	0.31	5.00	0.00	0.00	0.00

* F.S.<1, Liquefaction Potential Zone
(F.S. is limited to 5, CRR is limited to 2, CSR is limited to 2)

Units: Unit: qc, fs, Stress or Pressure = atm (1.0581tsf); Unit Weight = pcf; Depth = ft; Settlement = in.

atm (atmosphere) = 1 tsf (ton/ft2)

CRRm	Cyclic resistance ratio from soils
CSRsf	Cyclic stress ratio induced by a given earthquake (with user request factor of safety)
F.S.	Factor of Safety against liquefaction, F.S.=CRRm/CSRsf
S_sat	Settlement from saturated sands
S_dry	Settlement from Unsaturated Sands
S_all	Total Settlement from Saturated and Unsaturated Sands
NoLiq	No-Liquefy Soils

CALIFORNIA DEPARTMENT OF EDUCATION
SCHOOL FACILITIES PLANNING DIVISION

HAZARDOUS PIPELINE SURVEY (Rev.Og/04)

Submit only if pipeline survey information is not contained in a Geological Hazards Report or other environmental hazards report as required for California Department of Education (CDE) school site approval.

Project Tracking Number

County Kern

Local Educational Agency Kern High School District

Proposed School Site: Highland High School

Proposed School Site Location

Address and Cross Streets 2900 Royal Scots Way, Bakersfield, CA

Parcel Numbers 146-020-03 and 438-010-03

Legal Description Occupying approx. 47.83 acres. Dimensions of the property are approximately 1265' north-south by 1625' east-west.

Investigation

Describe what professional investigation has been conducted to allow completion of this survey, including but not limited to, field surveys, written, electronic, and documented verbal contacts with utility companies, railroads, cities, counties, special districts, or regulatory agencies. If any maps or other documentation previously completed by others is utilized, please cite. Attach additional sheets if necessary.

Site area survey within 1-mile of the site border. Visual inspection around local streets within ½-mile of the site area. Looked at topographic maps and a Bakersfield Pipeline Map of the area and contacted PG&E and The Gas Company for information concerning high-pressure pipelines within 1500' of the site. No pipelines were identified within 1500' of the site.

Certification

I certify that, to the best of my *knowledge based upon the above-described investigation, and not receiving credible information to the contrary, no portion* of *the proposed school site listed above is within 1500 feet* of *the easement* of *an aboveground or underground pipeline, including natural gas, petroleum, fuels, or other hazardous substances (other than a natural gas or water distribution line which serves the site or surrounding neighborhood with a maximum pressure of less than 80 psi).* *

Robert J. Becker, CEG, PG
Print Name

Environmental & Geologic Manager
Title

Signature

10-10-22
Date

PROFESSIONAL GEOLOGIST ROBERT J. BECKER No. 5076 REN 2/28/23 STATE OF CALIFORNIA

Professional Qualifications (e.g., registered engineer, geologist, etc.) CEG, PG

Soils Engineering, Inc., 4400 Yeager Way, Bakersfield, CA 93313
Company Address
661-831-5100 bob@soilsengineering.com
Telephone Number E-mail Address

* If an easement containing a pipeline with a maximum allowable operating pressure at or above 80 psi is within 1500 feet of the proposed school site, an acceptable pipeline risk analysis must be prepared by a competent professional according to the *California Code of Regulations,* Title 5, and CDE protocols in order to be considered for approval.

Kern High School District

Geotechnical Engineering Services
New Highland High School Swimming Pool
2900 Royal Scots Way, Bakersfield, CA

SEI File No. 22-18353
April 21, 2022

TABLE 1

TEST LOCATION	USCS	% < # 200	CONSOLIDATION				DIRECT SHEAR		UNCONFINED COMPRESSION		E.I.	ATTERBERG LIMITS			R-VALUE @ 300 psi	MAXIMUM DENSITY	
			C_C	C_S	S.P. (psf)	HV %	C, (ksf)	F.A.	Q_U, (psi)	C, (ksf)		LL	PL	PI	R.V.	E.P. (psi)	MDD (pcf)	O.M.
B-1 @ 0-5'	SC	38									17							
B-1 @ 3'	SC						0.22	37										
B-1 @ 6'	SC		0.06	0.01	0	-0.2												
B-6 @ 0-5'	SC	47									15							
B-6 @ 3'	SC						0.74	33.1										
B-6 @ 6'	SC		0.07	0.02	0	-0.1												
B-10 @ 6'	CL	58																
B-10 @ 21'	SC	17																
B-10 @ 41'	SP-SM	8.0																

CONSOLIDATION
Cc - Compression Index
Cs - Swell Index
S.P. (psf) - Swell Pressure
HV % - Heave Precentage / Collapase

UNCONFINED COMPRESSION
Q_U (psi) - Unconfined Compression Strength
C, (ksf) - Cohesion

DIRECT SHEAR
C (ksf) - Cohesion
F.A. - Friction Angle

E.I. - EXPANSION INDEX
ATTERBERG LIMITS
LL - Liquid Limit
PL - Plastic Limit
PI - Plasticity Index

(R)ESISTANCE VALUE
RV - R-Value @ 300 psi
EP - Expansion Press @ 300 psi

MAXIMUM DENSITY
MDD (pcf) - Max Dry Density
O.M. - Optimum Moisture

© 2022 SOILS ENGINEERING, INC.

Jenny Hannah Brown
Director of Facilities
Kern High School District
801 South Mount Vernon Avenue
Bakersfield, CA 93307

October 24, 2022

Subject: **Second Engineering Geology and Seismology Review for Highland High School – Swimming Pool and Aquatics Facility 2900 Royal Scots Way, Bakersfield, CA 93306 CGS Application No. 03-CGS5552**

Dear Ms. Brown:

In accordance with your request and transmittal of additional documents received on October 11, 2022, the California Geological Survey (CGS) has reviewed the engineering geology and seismology aspects of the consulting reports prepared for the subject project at Highland High School in Bakersfield, California. We understand that this project involves construction of a competition swimming pool and an associated aquatics building. This review was performed in accordance with Title 24, California Code of Regulations, 2019 California Building Code (CBC) and followed CGS Note 48 guidelines. We reviewed the following letter and report for this additional review of the project:

> **Response to CGS Comments, Engineering Geology and Seismology Review for Highland High School – Swimming Pool and Aquatics Facility, 2900 Royal Scots Way, Bakersfield, CA 93306:** Soils Engineering, Inc., 4400 Yeager Way, Bakersfield, California 93313; company Project No. 22-18353, letter dated October 10, 2022, 3 pages, 1 attachment.
>
> **Geological Hazard Study for New Swimming Pool and Aquatics Center, Highland High School, 2900 Royal Scots Way, Bakersfield, CA:** Soils Engineering, Inc., 4400 Yeager Way, Bakersfield, California 93313; company Project No. 22-18353, report dated October 10, 2022, 9 pages, 7 figures, 2 attachments.

In addition, we previously reviewed the following report:

> **Geotechnical Investigation for New Highland High School Swimming Pool, 2900 Royal Scots Way, Bakersfield, Kern County, CA:** Soils Engineering, Inc., 4400 Yeager Way, Bakersfield, California 93313; company Project No. 22-18353, report dated August 5, 2022, 16 pages, 4 appendices.

CGS previously submitted our findings regarding this project in a review letter dated October 5, 2022, in which the consultants were requested that a Certified Engineer Geologist (CEG) assist in the evaluation of the project and that the site is evaluated for historic seismicity, fault rupture hazard, landslide risk, and potential geological and related concerns as listed in Item 31 of the

CGS Note 48 Checklist for the Review of Engineering Geology and Seismology Reports for California Public Schools, Hospitals, and Essential Services Buildings (Note 48-Item 31). Additionally, the consultants were requested to provide a site location map that illustrates the setting of the subject property and the proposed project within the property, and to provide a regional geologic map.

Discussion of Provided Site Plan and Regional Geologic Map.

In the referenced Geological Hazard Study dated October 10, 2022, the consultants have provided a Site Location Map, Plot Plan, and Regional Geologic Map which adequately illustrate the location of the site and the regional geology relative to the site location.

Discussion of Evaluation of Historic Seismicity, Fault Rupture Hazard, and Landslide Hazard Risk.

The consultants' October 10, 2022 Geologic Hazard Study presents appropriate analyses and discussions regarding historic seismicity regional to the site, the potential for surface rupture at the site related to faulting, and the potential risk to the site posed by seismically-induced landsliding. The consultants conclude that fault rupture at the site is highly unlikely and that the potential for landslides and rockfalls to impact the site is very low. These conclusions appear reasonable based on the data presented.

Discussion of Flood hazard.

The consultants' October 10, 2022 report presents a discussion of potential risk to the site posed by flooding. The report states that the site is in a zone of minimal flood potential based on a provided Flood Insurance Rate Map and that the site is outside the flood areas detailed in provided Lake Isabella Dam Inundation Maps. Based on the provided discussion and accompanying maps, the consultants evaluation of potential risk posed by flooding appears appropriate.

Discussion of Evaluation of Proposed Project by CEG.

The consultants' October 10, 2022 Geologic Hazard Study report has been signed by Robert J. Becker, CEG No. 2238, who is the CEG of record on the CGS application for review of the proposed project. The report is cosigned by L. Thomas Bayne, Registered Geotechnical Engineer (GE) No. 125. The CEG and GE licenses are current with the California Board for Engineers, Land Surveyors, and Geologists.

Based on the discussions presented above, and the provided additional information, the consultants have provided a satisfactory evaluation of engineering geology and seismology issues with respect to the proposed project at the site.

In conclusion, ***the engineering geology and seismology issues at this site are adequately assessed in the referenced reports, and no further information is requested***. If you have any further questions about this review letter, please contact the primary reviewer at will.harris@conservation.ca.gov.

Respectfully submitted,

Will J. Harris
Senior Engineering Geologist
PG 5679, CEG 2222, CHg 750

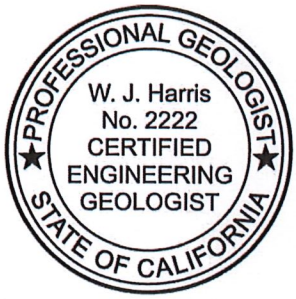

Concur:

Jennifer Thornburg
Senior Engineering Geologist
PG 5476, CEG 2240



Copies to:

Robert J. Becker, *Certified Engineering Geologist*, L. Thomas Bayne, *Registered Geotechnical Engineer*, On Man Lau, *Registered Geotechnical Engineer*
Soils Engineering, Inc., 4400 Yeager Way, Bakersfield CA 93313

Thomas W. Kruse, *Architect*
PJHM Architects, Inc., 24461 Ridge Route Drive, Suite 100, Laguna Hills, CA 92653

Douglas Humphrey, *Regional Manager*
Division of State Architect, 355 South Grand Avenue, Suite 2100, Los Angeles, CA 90071

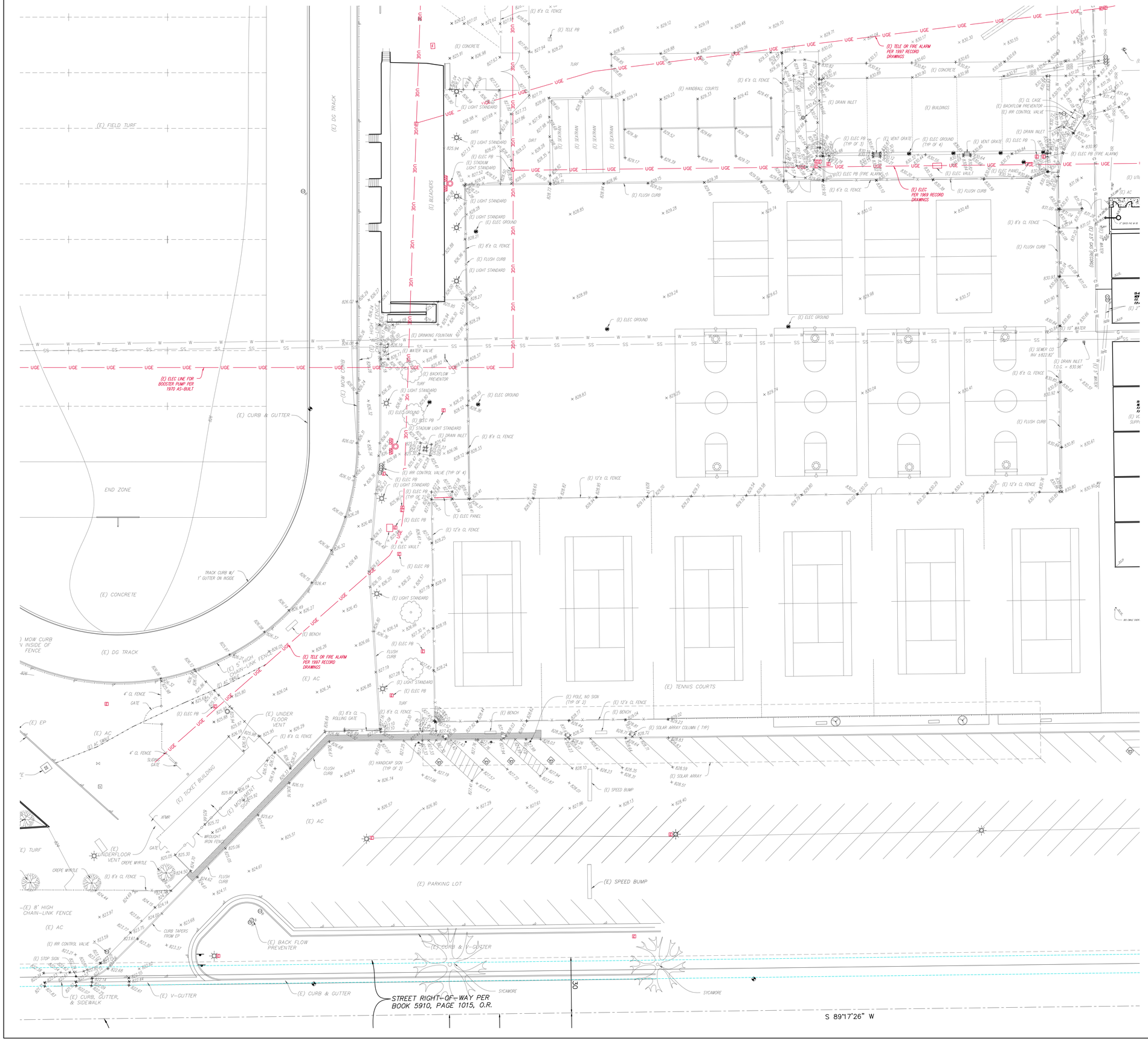

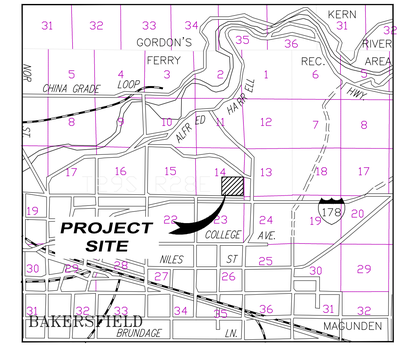

VICINITY MAP
N.T.S.

LEGEND:

ABBREVIATIONS:

(E)	EXISTING
TYP.	TYPICAL
FD.	FOUND
BK.	BOOK
PG.	PAGE
C.O.K.	COUNTY OF KERN
C.O.B.	CITY OF BAKERSFIELD
CONC.	CONCRETE
A.C.	ASPHALT PAVEMENT
FG	FINISH GRADE
EP	EDGE OF PAVEMENT
TC	TOP OF CURB
FL	FLOWLINE
FF	FINISHED FLOOR
FP	FINISHED PAD
TP	TOP OF PAVEMENT
GB	GRADE BREAK

- EXISTING FIRE HYDRANT
- EXISTING POWER POLE
- EXISTING STREET LIGHT
- FOUND MONUMENT
- EXISTING TRAFFIC SIGN
- SD — EXISTING STORM DRAIN LINE
- FO — EXISTING FIBER OPTIC LINE
- W — EXISTING WATER LINE
- SS — EXISTING SEWER LINE
- G — EXISTING GAS LINE
- X — EXISTING FENCELINE
- UGE — EXISTING ELECTRIC LINE
- OHE — EXISTING OVERHEAD ELECTRIC LINE
- EXISTING PROPERTY LINE
- EXISTING RIGHT-OF-WAY
- EXISTING CURB & GUTTER

BENCHMARK

TOP OF CAP ON CITY OF BAKERSFIELD CONCRETE MONUMENT IN LAMPHOLE AT THE CENTERLINE INTERSECTION OF AUBURN STREET AND PIPER WAY PER CITY OF BAKERSFIELD BENCH MARK BOOK.

ELEVATION = 804.28'

BASIS OF BEARINGS

THE BEARING OF N89°17'26"E SHOWN FOR THE SOUTH LINE OF THE SOUTHEAST QUARTER OF SECTION 14, T.29S., R.28E., M.D.M. ON RECORD OF SURVEY, R.S. BOOK 9, PAGE 91, WAS USED AS THE BASIS OF BEARINGS HEREON.

LEGAL DESCRIPTION

BEING A PORTION OF THE SOUTHEAST QUARTER OF SECTION 14, T.29S., R.28E., M.D.B.M.

ADDRESS

2900 ROYAL SCOTS WAY

APN

146-020-23

UTILITY NOTE

NOT ALL UTILITIES WERE LOCATED BY THIS SURVEY AND SWANSON ENGINEERING, INC. ASSUMES NO RESPONSIBILITY FOR UNDERGROUND UTILITIES OR FACILITIES NOT SHOWN OR FOR INFORMATION OBTAINED FROM OUTSIDE SOURCES.

SWANSON ENGINEERING, INC.
2000 Oak Street, Suite 150 ~ Bakersfield, CA 93301
P~(661) 631-4919; F~(661) 873-4777

LIC. # 43032

BY:

DESCRIPTION:

DATE:

JOB NO.: 15-047-69

ENGINEER: RTS

DATE: 6-28-2022

KERN HIGH SCHOOL DISTRICT
HIGHLAND HIGH SCHOOL
PROPOSED SWIMMING POOL ADDITION
TOPOGRAPHIC SURVEY

15047-69 T001-R3.DWG

Tuesday, July 12, 2022 3:34:21 PM

T01

SHEET 1 OF 1

Facilities Planning
801 S. Mount Vernon Ave
Bakersfield, California 93307
P: (661) 396-4969

Project: 21003 Highland Pool & Aquatics Center
2900 Royal Scots Way
Bakersfield, 93306
P: 661-332-5036

RFI #Bid-1: Insurance Requirements

Status	Closed on 05/22/23		
To	Craig Arnall (Kern High School District) *(Response Required)*	**From**	Craig Arnall (Kern High School District) 5801 Sundale Ave. Bakersfield, California 93309
Date Initiated	May 16, 2023	**Due Date**	May 21, 2023
Location		**Project Stage**	Bidding
Cost Impact		**Schedule Impact**	
Spec Section		**Cost Code**	
Drawing Number		**Reference**	
Linked Drawings			
Received From			
Copies To	Tom Kruse (PJHM), Robert Pugh (Kern High School District), Kyle Sapak (Pacifico Energy), Derek Stemrich (PJHM)		

Activity

Question

Question from Craig Arnall Kern High School District *on Tuesday, May 16, 2023 at 04:07 PM PDT*

In reviewing the insurance requirements, it looks like the district requires $2,000,000 Occurrence limit and $5,000,000 Aggregate on the General Liability and an Umbrella with limits of $5,000,000 Occurrence limit and $10,000,000 Aggregate. Can you confirm the total limits required with the Umbrella? If this is correct, the total is $15,000,000 Aggregate limit. This high insurance limits will prevent for some subcontractors to bid on the work. Please advise.

Attachments
AMG RFI 1 - Highland HS Pool & Aquatic Center.pdf

Official Response

Response from Craig Arnall Kern High School District *on Monday, May 22, 2023 at 01:03 PM PDT*

Insurance requirements will change for the CONTRACTOR to "Requirement C - $5,000,000 per Occurrence, $10,000,000 Aggregate". The requirement for subcontractor s will not change as stated ("CONTRACTOR shall require its subcontractors, if any, to take out and maintain commercial liability insurance with policy limits not less than $1,000,000 per occurrence and $2,000,000 aggregate per project on bodily injury and property damage.")

Please see the updated Notice to Contractors in a forthcoming Addendum.

Facilities Planning
801 S. Mount Vernon Ave
Bakersfield, California 93307
P: (661) 396-4969

Project: 21003 Highland Pool & Aquatics Center
2900 Royal Scots Way
Bakersfield, 93306
P: 661-332-5036

RFI #Bid-2: Subcontractor Prequlification

Status	Closed on 05/16/23		
To	Derek Stemrich (PJHM) *(Response Required)* Chenoa Turner (PJHM) *(Response Required)*	**From**	Craig Arnall (Kern High School District) 5801 Sundale Ave. Bakersfield, California 93309
Date Initiated	May 16, 2023	**Due Date**	May 21, 2023
Location		**Project Stage**	Bidding
Cost Impact		**Schedule Impact**	
Spec Section		**Cost Code**	
Drawing Number		**Reference**	
Linked Drawings			
Received From			
Copies To	Tom Kruse (PJHM), Robert Pugh (Kern High School District), Kyle Sapak (Pacifico Energy)		

Activity

Question

Question from Craig Arnall Kern High School District *on Tuesday, May 16, 2023 at 04:11 PM PDT*

Please confirm if sheet metal and fire sprinkler subcontractors are required to be prequalified.

Attachments
AMG RFI 2 - Highland Pool & Aquatic Center.pdf

Official Response

Response from Craig Arnall Kern High School District *on Tuesday, May 16, 2023 at 04:11 PM PDT*

Yes

Facilities Planning
801 S. Mount Vernon Ave
Bakersfield, California 93307
P: (661) 396-4969

Project: 21003 Highland Pool & Aquatics Center
2900 Royal Scots Way
Bakersfield, 93306
P: 661-332-5036

RFI #Bid-3: Subcontractor Listing on Bid Form

Status	Closed on 05/16/23		
To	Craig Arnall (Kern High School District) *(Response Required)*	**From**	Craig Arnall (Kern High School District) 5801 Sundale Ave. Bakersfield, California 93309
Date Initiated	May 16, 2023	**Due Date**	May 21, 2023
Location		**Project Stage**	Bidding
Cost Impact		**Schedule Impact**	
Spec Section		**Cost Code**	
Drawing Number		**Reference**	
Linked Drawings			
Received From			
Copies To	Tom Kruse (PJHM), Robert Pugh (Kern High School District), Kyle Sapak (Pacifico Energy), Derek Stemrich (PJHM)		

Activity

Question

Question from Craig Arnall Kern High School District *on Tuesday, May 16, 2023 at 04:15 PM PDT*

Please confirm that it would be acceptable to submit the city & state instead of the full address for each subcontractor on the subcontractor listing with the bid.

Attachments
AMG RFI 3 - Highland Pool & Aquatic Center.pdf

Official Response

Response from Craig Arnall Kern High School District *on Tuesday, May 16, 2023 at 04:17 PM PDT*

Contractors do not have to list state on their bid forms, but they do have to within 24 hours of the bid opening.:
16. Listing Subcontractors.
Each bidder shall submit with its bid a list of the proposed subcontractors on the project as required by the Subletting and Subcontracting Fair Practices Act (Public Contract Code Section 4100 and following sections) on the form furnished with the Contract Documents. If alternate bids are called for and the bidder intends to use different or additional subcontractors, a separate list of subcontractors must be submitted for each such alternate bid. The Owner may request that bidder submit information to assess the responsibility of the bidder's proposed subcontractors. In addition to the information provided with the bid pursuant to the above statutes, the apparent low bidder shall, within 24 hours of the bid opening, provide for all subcontractors their telephone numbers and contractor's license classification.

Facilities Planning
801 S. Mount Vernon Ave
Bakersfield, California 93307
P: (661) 396-4969

Project: 21003 Highland Pool & Aquatics Center
2900 Royal Scots Way
Bakersfield, 93306
P: 661-332-5036

RFI #Bid-5: existing utility

Status	Closed on 05/23/23		
To	Derek Stemrich (PJHM) *(Response Required)*	**From**	Robert Pugh (Kern High School District) 801 S. Mt. Vernon Ave Bakersfield, California 93307
Date Initiated	May 22, 2023	**Due Date**	May 27, 2023
Location		**Project Stage**	Bidding
Cost Impact		**Schedule Impact**	
Spec Section		**Cost Code**	
Drawing Number		**Reference**	
Linked Drawings			
Received From			
Copies To	Craig Arnall (Kern High School District), Bob Swanson (Swanson Engineering, Inc.), Nikolas Bruno (TK1SC COLLABORATIVE), Greg Cannon (Aquatic Design Group), John Cohrs (Kern High School District), Scott Ferrell (Aquatic Design Group), Brent Kearney (PROTECTION DESIGN & CONSULTING), Tom Kruse (PJHM), Neil Longbrake (Engineous Group, Inc), Young Nam (VCA), Mike Noel (Swanson Engineering, Inc.), Noah Park (VCA), Brandon Petrunio (BRANDON PETRUINO & ASSOCIATES, INC.), Robert Pugh (Kern High School District), Kyle Sapak (Pacifico Energy), Bradley Severson (Engineous Group, Inc), Andre Shahbandari (Engineous Group, Inc), Derek Stemrich (PJHM), Chenoa Turner (PJHM)		

Activity

Question

Question from Robert Pugh Kern High School District *on Monday, May 22, 2023 at 07:02 AM PDT*

Refer to sheet P2.0. The site plan calls to remove and replace a portion of existing 3" G with new 4" G. Please confirm the line to be removed and replaced is from the existing meter up to the 17090 CFH point and not beyond.

Official Response

Response from Chenoa Turner PJHM *on Tuesday, May 23, 2023 at 09:40 AM PDT*

As per the contract document the existing 3"gas line shall be removed from the designation 17090 CFH to the existing gas meter. Confirm the existing gas size prior to removal.

Neil Longbrake, Engineous Group, 05-22-2023

Attachments
RFI #Bid-5- existing utility_Response.pdf

Facilities Planning
801 S. Mount Vernon Ave
Bakersfield, California 93307
P: (661) 396-4969

Project: 21003 Highland Pool & Aquatics Center
2900 Royal Scots Way
Bakersfield, 93306
P: 661-332-5036

RFI #Bid-6: Scope of Work

Status	Closed on 05/22/23		
To	Craig Arnall (Kern High School District) *(Response Required)*	**From**	Robert Pugh (Kern High School District) 801 S. Mt. Vernon Ave Bakersfield, California 93307
Date Initiated	May 22, 2023	**Due Date**	May 27, 2023
Location		**Project Stage**	Bidding
Cost Impact		**Schedule Impact**	
Spec Section		**Cost Code**	
Drawing Number		**Reference**	
Linked Drawings			
Received From			
Copies To	Craig Arnall (Kern High School District), Bob Swanson (Swanson Engineering, Inc.), Nikolas Bruno (TK1SC COLLABORATIVE), Greg Cannon (Aquatic Design Group), John Cohrs (Kern High School District), Scott Ferrell (Aquatic Design Group), Brent Kearney (PROTECTION DESIGN & CONSULTING), Tom Kruse (PJHM), Neil Longbrake (Engineous Group, Inc), Young Nam (VCA), Mike Noel (Swanson Engineering, Inc.), Noah Park (VCA), Brandon Petrunio (BRANDON PETRUINO & ASSOCIATES, INC.), Robert Pugh (Kern High School District), Kyle Sapak (Pacifico Energy), Bradley Severson (Engineous Group, Inc), Andre Shahbandari (Engineous Group, Inc), Derek Stemrich (PJHM), Chenoa Turner (PJHM)		

Activity

Question

Question from Robert Pugh Kern High School District *on Monday, May 22, 2023 at 07:04 AM PDT*

Refer to Spec Section 40 - Scope of Work, Page 4 Item 8 and Page 5 Item 9. For both the fire and domestic water lines, the point of connection is stated as being "off-site" but the plans show both water connections to be on-site. Please confirm the instructions per the scope of work are incorrect.

Official Response

Response from Craig Arnall Kern High School District *on Monday, May 22, 2023 at 07:35 AM PDT*

Please disregard references to "off-site" connection work for fire and domestic water in the scope of work form (40). Both of these connections are on-site.

Craig Arnall

Facilities Planning
801 S. Mount Vernon Ave
Bakersfield, California 93307
P: (661) 396-4969

Project: 21003 Highland Pool & Aquatics Center
2900 Royal Scots Way
Bakersfield, 93306
P: 661-332-5036

RFI #Bid-7: Scope of Work

Status	Closed on 05/22/23		
To	Craig Arnall (Kern High School District) *(Response Required)*	**From**	Robert Pugh (Kern High School District) 801 S. Mt. Vernon Ave Bakersfield, California 93307
Date Initiated	May 22, 2023	**Due Date**	May 27, 2023
Location		**Project Stage**	Bidding
Cost Impact		**Schedule Impact**	
Spec Section		**Cost Code**	
Drawing Number		**Reference**	
Linked Drawings			
Received From			
Copies To	Craig Arnall (Kern High School District), Bob Swanson (Swanson Engineering, Inc.), Nikolas Bruno (TK1SC COLLABORATIVE), Greg Cannon (Aquatic Design Group), John Cohrs (Kern High School District), Scott Ferrell (Aquatic Design Group), Brent Kearney (PROTECTION DESIGN & CONSULTING), Tom Kruse (PJHM), Neil Longbrake (Engineous Group, Inc), Young Nam (VCA), Mike Noel (Swanson Engineering, Inc.), Noah Park (VCA), Brandon Petrunio (BRANDON PETRUINO & ASSOCIATES, INC.), Robert Pugh (Kern High School District), Kyle Sapak (Pacifico Energy), Bradley Severson (Engineous Group, Inc), Andre Shahbandari (Engineous Group, Inc), Derek Stemrich (PJHM), Chenoa Turner (PJHM)		

Activity

Question

Question from Robert Pugh Kern High School District *on Monday, May 22, 2023 at 07:06 AM PDT*

Refer to Spec Section 40 - Scope of Work, Page 5 Item 2: This item references off-site improvement plans. Are there off-site improvement plans apart of this contract? If so, please provide.

Official Response

Response from Craig Arnall Kern High School District *on Monday, May 22, 2023 at 07:38 AM PDT*

There are no off-site improvement plans associated with the contract documents or plans for this project. Please disregard references to off-site improvement plans.

Facilities Planning
801 S. Mount Vernon Ave
Bakersfield, California 93307
P: (661) 396-4969

Project: 21003 Highland Pool & Aquatics Center
2900 Royal Scots Way
Bakersfield, 93306
P: 661-332-5036

RFI #Bid-8: Scope of Work

Status	Closed on 05/22/23		
To	Craig Arnall (Kern High School District) *(Response Required)*	**From**	Robert Pugh (Kern High School District) 801 S. Mt. Vernon Ave Bakersfield, California 93307
Date Initiated	May 22, 2023	**Due Date**	May 27, 2023
Location		**Project Stage**	Bidding
Cost Impact		**Schedule Impact**	
Spec Section		**Cost Code**	
Drawing Number		**Reference**	
Linked Drawings			
Received From			
Copies To	Craig Arnall (Kern High School District), Bob Swanson (Swanson Engineering, Inc.), Nikolas Bruno (TK1SC COLLABORATIVE), Greg Cannon (Aquatic Design Group), John Cohrs (Kern High School District), Scott Ferrell (Aquatic Design Group), Brent Kearney (PROTECTION DESIGN & CONSULTING), Tom Kruse (PJHM), Neil Longbrake (Engineous Group, Inc), Young Nam (VCA), Mike Noel (Swanson Engineering, Inc.), Noah Park (VCA), Brandon Petrunio (BRANDON PETRUINO & ASSOCIATES, INC.), Robert Pugh (Kern High School District), Kyle Sapak (Pacifico Energy), Bradley Severson (Engineous Group, Inc), Andre Shahbandari (Engineous Group, Inc), Derek Stemrich (PJHM), Chenoa Turner (PJHM)		

Activity

Question

Question from Robert Pugh Kern High School District *on Monday, May 22, 2023 at 07:07 AM PDT*

Refer to Spec Section 40 - Scope of Work, Page 7 Items L and M: these two items mention sports equipment and miscellaneous
specialties that do not show up on the plans. Are these two items apart of the contract? If so, please clarify scope of work.

Official Response

Response from Craig Arnall Kern High School District *on Monday, May 22, 2023 at 09:01 AM PDT*

Item 4.L is regarding thrust blocks for any and all underground piping as required by the contract documents specifically for the pool piping.

Item 4.M is regarding any and all equipment associated with the pool, and pool equipment as shown on the contract documents, and specifically on the "DP", "SP" & "MR" drawings, and the division 13 specifications.